eProjects
Work Order Number(s):
1393229

Appropriation: MCON

SOF Intel OPS Expansion Phase II

At the

MCB Camp Lejeune, NC

(P-1396B)

DESIGNED BY:

NAVFAC MID-ATLANTIC
9742 MARYLAND AVENUE
NORFOLK, VIRGINIA 23511-3095

SPECIFICATION PREPARED BY:

Architectural: Gyasi Cooke, RA
Civil: Steve Medvick, PE
Structural: Ron Silva, EIT
Mechanical: Benjamin Doyle, PE / Donna Booth, PE (H & A)
Electrical: Justin D Urquhart, EIT
Fire Prot.: Scott Arnoe, PE
Geotechnical: Robert Huntoon, PE
Landscape Architecture: B. Taylor Gould, RLA
Interior Design: Christine McKinley CID
Specification: R. Ernie Johnson

Date: July 29, 2016

SPECIFICATION APPROVED BY:

For Commander, NAVFAC MID-ATLANTIC:
Date:

Digitally signed by ABBOTT.BRIAN.G.1229521450
DN: c=US, o=U.S. Government, ou=DoD, ou=PKI, ou=USN, cn=ABBOTT.BRIAN.G.1229521450
Date: 2016.08.09 13:25:21 -04'00'

FINAL

THIS PAGE HAS BEEN INTENTIONALLY LEFT BLANK

PROJECT TABLE OF CONTENTS

DIVISION 01 - GENERAL REQUIREMENTS

01 11 00 SUMMARY OF WORK
01 14 00 WORK RESTRICTIONS
01 20 00.00 20 PRICE AND PAYMENT PROCEDURES
01 30 00 ADMINISTRATIVE REQUIREMENTS
01 30 01.00 22 DESIGN, PROCUREMENT, AND INSTALLATION OF FURNITURE, FIXTURES, AND EQUIPMENT
01 32 17.00 20 NETWORK ANALYSIS SCHEDULES (NAS)
01 33 00 SUBMITTAL PROCEDURES
01 33 29 SUSTAINABILITY REPORTING
01 35 26 GOVERNMENTAL SAFETY REQUIREMENTS
01 45 00.00 20 QUALITY CONTROL
01 50 00 TEMPORARY CONSTRUCTION FACILITIES AND CONTROLS
01 57 13.00 22 EROSION AND SEDIMENT CONTROL
01 57 19.00 20 TEMPORARY ENVIRONMENTAL CONTROLS
01 57 19.01 20 SUPPLEMENTAL TEMPORARY ENVIRONMENTAL CONTROLS
01 58 00 PROJECT IDENTIFICATION
01 60 00.00 22 REQUIREMENTS FOR PESTICIDE AND HERBICIDE COORDINATION
01 74 19 CONSTRUCTION AND DEMOLITION WASTE MANAGEMENT
01 78 00 CLOSEOUT SUBMITTALS
01 78 23 OPERATION AND MAINTENANCE DATA
01 78 24.00 20 FACILITY ELECTRONIC OPERATION AND MAINTENANCE SUPPORT INFORMATION (eOMSI)
01 78 30.00 22 GIS DATA DELIVERABLES
01 91 13.00 22 GENERAL COMMISSIONING REQUIREMENTS FOR CONSTRUCTION

DIVISION 03 - CONCRETE

03 30 00 CAST-IN-PLACE CONCRETE
03 45 00 PRECAST ARCHITECTURAL CONCRETE

DIVISION 04 - MASONRY

04 20 00 MASONRY

DIVISION 05 - METALS

05 12 00 STRUCTURAL STEEL
05 21 16 LONGSPAN STEEL JOIST FRAMING
05 21 19 OPEN WEB STEEL JOIST FRAMING
05 30 00 STEEL DECKS
05 40 00 COLD-FORMED METAL FRAMING
05 50 13 MISCELLANEOUS METAL FABRICATIONS

DIVISION 06 - WOOD, PLASTICS, AND COMPOSITES

06 10 00 ROUGH CARPENTRY
06 20 00 FINISH CARPENTRY
06 41 16.00 10 LAMINATE CLAD ARCHITECTURAL CASEWORK
06 61 16 SOLID POLYMER (SOLID SURFACING) FABRICATIONS

DIVISION 07 - THERMAL AND MOISTURE PROTECTION

07 11 13 BITUMINOUS DAMPPROOFING
07 13 53 ELASTOMERIC SHEET WATERPROOFING
07 15 00.00 22 AIR AND VAPOR BARRIERS

07 21 13 BOARD AND BLOCK INSULATION
07 21 16 MINERAL FIBER BLANKET INSULATION
07 42 13 COMPOSITE METAL WALL PANELS
07 60 00 FLASHING AND SHEET METAL
07 61 14.00 20 STEEL STANDING SEAM ROOFING
07 84 00 FIRESTOPPING
07 92 00 JOINT SEALANTS

DIVISION 08 - OPENINGS

08 11 13 STEEL DOORS AND FRAMES
08 14 00 WOOD DOORS
08 34 73 SOUND CONTROL DOOR ASSEMBLIES
08 45 23.00 22 INSULATED TRANSLUCENT FIBERGLASS SANDWICH PANEL SYSTEM
08 71 00 DOOR HARDWARE
08 81 00 GLAZING
08 91 00 METAL WALL AND DOOR LOUVERS

DIVISION 09 - FINISHES

09 22 00 SUPPORTS FOR PLASTER AND GYPSUM BOARD
09 29 00 GYPSUM BOARD
09 30 13 CERAMIC TILING
09 51 00 ACOUSTICAL CEILINGS
09 65 00 RESILIENT FLOORING
09 68 00 CARPETING
09 90 00 PAINTS AND COATINGS

DIVISION 10 - SPECIALTIES

10 10 00 VISUAL COMMUNICATIONS SPECIALTIES
10 14 00.20 INTERIOR SIGNAGE
10 14 01 EXTERIOR SIGNAGE
10 26 13 WALL AND CORNER GUARDS
10 28 13 TOILET ACCESSORIES
10 44 16 FIRE EXTINGUISHERS

DIVISION 12 - FURNISHINGS

12 93 00 SITE FURNISHINGS

DIVISION 13 - SPECIAL CONSTRUCTION

13 34 19 METAL BUILDING SYSTEMS

DIVISION 22 - PLUMBING

22 00 00 PLUMBING, GENERAL PURPOSE
22 08 00.00 22 COMMISSIONING OF PLUMBING SYSTEMS

DIVISION 23 - HEATING, VENTILATING, AND AIR CONDITIONING

23 00 00 AIR SUPPLY, DISTRIBUTION, VENTILATION, AND EXHAUST SYSTEMS
23 03 00.00 20 BASIC MECHANICAL MATERIALS AND METHODS
23 05 48.00 40 VIBRATION AND SEISMIC CONTROLS FOR HVAC PIPING AND EQUIPMENT
23 05 93 TESTING, ADJUSTING, AND BALANCING FOR HVAC
23 07 00 THERMAL INSULATION FOR MECHANICAL SYSTEMS
23 08 00.00 22 COMMISSIONING OF HVAC SYSTEMS

23 09 23.13 22 BACnet DIRECT DIGITAL CONTROL SYSTEMS FOR HVAC
23 23 00 REFRIGERANT PIPING
23 81 00.00 20 UNITARY AIR CONDITIONING EQUIPMENT
23 81 28.10 22 VARIABLE REFRIGERANT FLOW (VRF) MULTI-SPLIT AIR CONDITIONING AND HEAT PUMP EQUIPMENT
23 82 00.00 20 TERMINAL HEATING AND COOLING UNITS

DIVISION 26 - ELECTRICAL

26 00 00.00 20 BASIC ELECTRICAL MATERIALS AND METHODS
26 08 00 APPARATUS INSPECTION AND TESTING
26 08 10.00 22 COMMISSIONING OF ELECTRICAL SYSTEMS
26 12 19.10 THREE-PHASE PAD-MOUNTED TRANSFORMERS
26 20 00 INTERIOR DISTRIBUTION SYSTEM
26 27 14.00 20 ELECTRICITY METERING
26 41 00 LIGHTNING PROTECTION SYSTEM
26 51 00 INTERIOR LIGHTING
26 56 00 EXTERIOR LIGHTING

DIVISION 27 - COMMUNICATIONS

27 10 00 BUILDING TELECOMMUNICATIONS CABLING SYSTEM
27 40 00 AUDIO VIDEO (A/V) COMMUNICATIONS
27 54 00.00 20 COMMUNITY ANTENNA TELEVISION (CATV) SYSTEMS

DIVISION 28 - ELECTRONIC SAFETY AND SECURITY

28 31 76.00 22 INTERIOR COMBINATION EMERGENCY COMMUNICATIONS SYSTEMS

DIVISION 31 - EARTHWORK

31 05 19 GEOTEXTILE
31 23 00.00 20 EXCAVATION AND FILL
31 31 16.00 22 SOIL TREATMENT FOR SUBTERRANEAN TERMITE CONTROL

DIVISION 32 - EXTERIOR IMPROVEMENTS

32 05 33 LANDSCAPE ESTABLISHMENT
32 10 00 BITUMINOUS CONCRETE PAVEMENT
32 13 13.06 PORTLAND CEMENT CONCRETE PAVEMENT FOR ROADS AND SITE FACILITIES
32 16 13 CONCRETE SIDEWALKS AND CURBS AND GUTTERS
32 17 23.00 20 PAVEMENT MARKINGS
32 92 23 SODDING
32 93 00 EXTERIOR PLANTS

DIVISION 33 - UTILITIES

33 11 00 WATER DISTRIBUTION
33 30 00 SANITARY SEWERS
33 40 00 STORM DRAINAGE UTILITIES
33 71 01 OVERHEAD TRANSMISSION AND DISTRIBUTION
33 71 02 UNDERGROUND ELECTRICAL DISTRIBUTION
33 82 00 TELECOMMUNICATIONS OUTSIDE PLANT (OSP)

-- End of Project Table of Contents --

THIS PAGE HAS BEEN INTENTIONALLY LEFT BLANK

SECTION 01 11 00

SUMMARY OF WORK
09/14

PART 1 GENERAL

1.1 REFERENCES

The publications listed below form a part of this specification to the extent referenced. The publications are referred to within the text by the basic designation only.

ASTM INTERNATIONAL (ASTM)

ASTM E2114	(2008) Standard Terminology for Sustainability Relative to the Performance of Buildings

INTERNATIONAL CODE COUNCIL (ICC)

ICC IBC	(2012) International Building Code

U.S. DEPARTMENT OF DEFENSE (DOD)

UFC 1-200-01	(2013) General Building Requirements

U.S. ENVIRONMENTAL PROTECTION AGENCY (EPA)

Energy Star	(1992; R 2006) Energy Star Energy Efficiency Labeling System (FEMP)

U.S. GREEN BUILDING COUNCIL (USGBC)

LEED NC	(2009) Leadership in Energy and Environmental Design(tm) New Construction Rating System

1.2 DEFINITIONS

Definitions pertaining to sustainable development are as defined in ASTM E2114 and as specified.

a. "Environmentally preferable products" have a lesser or reduced effect on the environment in comparison to conventional products and services. This comparison may consider raw materials acquisition, production, manufacturing, packaging, distribution, reuse, operation, maintenance, or disposal of the product.

b. "Indoor environmental quality" is the physical characteristics of the building interior that impact occupants, including air quality, illumination, acoustics, occupant control, thermal comfort, daylighting, and views.

c. "Operational performance" is the functional behavior of the building as a whole or of the building components.

d. "Sustainability" is the balance of environmental, economic, and

societal considerations.

1.3 SUBMITTALS

Government approval is required for submittals with a "G" designation; submittals not having a "G" designation are for Contractor Quality Control approval. An "S" following a submittal item indicates that the submittal is required for the Sustainability Notebook to fulfill federally mandated sustainable requirements in accordance with 01 33 29 SUSTAINABILITY REPORTING. Submit the following in accordance with Section 01 33 00 SUBMITTAL PROCEDURES:

SD-07 Certificates

Energy Performance Rating

1.4 WORK COVERED BY CONTRACT DOCUMENTS

1.4.1 Project Description

The work includes construction of the SOF Intel Ops Expansion facility and incidental related work.

1.4.2 Location

The work shall be located at the MCB Camp Lejeune, NC, approximately as indicated. The exact location will be shown by the Contracting Officer.

1.5 BUILDING CODE

Except as indicated otherwise, or as modified by UFC 1-200-01, use ICC IBC as the building code for this project.

1.6 PROJECT ENVIRONMENTAL GOALS

Contractor shall distribute copies of the Environmental Goals to each subcontractor and the Contracting Officer. The overall goal for design, construction, and operation is to produce a building that meets the functional program needs and incorporates the principles of sustainability. Specifically:

a. Preserve and restore the site ecosystem and biodiversity; avoid site degradation and erosion. Minimize offsite environmental impact.

b. Use the minimum amount of energy, water, and materials feasible to meet the design intent. Select energy and water efficient equipment and strategies.

c. Use environmentally preferable products and decrease toxicity level of materials used.

d. Use renewable energy and material resources.

e. Optimize operational performance (through commissioning efforts) in order to ensure energy efficient equipment operates as intended. Consider the durability, maintainability, and flexibility of building systems.

f. Manage construction site and storage of materials to ensure no negative

impact on the indoor environmental quality of the building.

g. Reduce construction waste through reuse, recycling, and supplier take-back.

1.6.1 Independent Verification

1.6.1.1 US Green Building Council (USGBC) - LEED(tm) Rating System

Provide completed project in compliance with USGBC LEED-NC(tm) v3.0 (LEED NC), level silver requirements.

1.6.1.2 EPA Energy Performance Rating

Provide work consistent with drawings in order to meet Energy Star in accordance with design.

1.7 LOCATION OF UNDERGROUND FACILITIES

Obtain digging permits prior to start of excavation by contacting the Contracting Officer 15 calendar days in advance. Scan the construction site with electromagnetic or sonic equipment, and mark the surface of the ground, or paved surface where existing underground utilities are discovered. Verify the elevations of existing piping, utilities,and any type of underground or encased obstruction not indicated to be specified or removed but indicated or discovered during scanning in locations to be traversed by piping, ducts, and other work to be conducted or installed. Verify elevations before installing new work closer than nearest manhole or other structure at which an adjustment in grade can be made. Coordinate this with the requirement in Specification Section 01 35 26 GOVERNMENTAL SAFETY REQUIREMENTS, Paragraph "Location of Underground Utilities".

1.7.1 Notification Prior to Excavation

Notify the Contracting Officer at least 15 days prior to starting excavation work.

PART 2 PRODUCTS

Not used.

PART 3 EXECUTION

Not used.

-- End of Section --

THIS PAGE HAS BEEN INTENTIONALLY LEFT BLANK

SECTION 01 14 00

WORK RESTRICTIONS
06/14

PART 1 GENERAL

1.1 SUBMITTALS

Government approval is required for submittals with a "G" designation; submittals not having a "G" designation are for Contractor Quality Control approval. The following shall be submitted in accordance with Section 01 33 00 SUBMITTAL PROCEDURES:

SD-01 Preconstruction Submittals

List of Contact Personnel; G

1.2 SPECIAL SCHEDULING REQUIREMENTS

a. Have materials, equipment, and personnel required to perform the work at the site prior to the commencement of the work.

b. The nearby buildings and utilities will remain in operation during the entire construction period. The Contractor shall conduct his operations so as to cause the least possible interference with normal operations of the activity.

c. Permission to interrupt any Activity roads, railroads, and/or utility service shall be requested in writing a minimum of 15 calendar days prior to the desired date of interruption.

d. Government Telecommunications Contractor Access: The Government Telecommunications Contractor must be allowed access to the facility towards the end of construction (finishes 90 percent complete, rough-in 100 percent complete, Inside Plant (ISP)/Outside Plant (OSP) infrastructure in place) to provide equipment in the telecommunications rooms and make final connections. The Contractor will be required to coordinate their efforts with the Government Telecommunications contractor to facilitate joint use of building spaces during the final phases of construction and work the coordination effort into the construction schedule. Requirements for Government Telecommunications are specified in the contract documents.

1.3 CONTRACTOR ACCESS AND USE OF PREMISES

1.3.1 Activity Regulations

Ensure that Contractor personnel employed on the Activity become familiar with and obey Activity regulations including safety, fire, traffic and security regulations. Keep within the limits of the work and avenues of ingress and egress. Wear hard hats in designated areas. Do not enter any restricted areas unless required to do so and until cleared for such entry. The Contractor's equipment shall be conspicuously marked for identification.

1.3.1.1 Subcontractors and Personnel Contacts

Furnish a list of contact personnel of the Contractor and subcontractors including addresses and telephone numbers for use in the event of an emergency. As changes occur and additional information becomes available, correct and change the information contained in previous lists.

1.3.1.2 No Smoking Policy

Smoking is prohibited within and outside of all buildings on installations under the cognizance of NAVFAC except in designated smoking areas. This applies to existing buildings, buildings under construction and buildings under renovation. Discarding tobacco materials other than into designated tobacco receptacles is considered littering and is subject to fines. The Contracting Officer will identify designated smoking areas.

1.3.2 Working Hours

Regular working hours shall consist of an 8 1/2 hour period established by the Contracting Officer, Monday through Friday, excluding Government holidays.

1.3.3 Work Outside Regular Hours

Work outside regular working hours requires Contracting Officer approval. Make application 15 calendar days prior to such work to allow arrangements to be made by the Government for inspecting the work in progress. During periods of darkness, the different parts of the work shall be lighted in a manner approved by the Contracting Officer.

1.3.4 Occupied and Existing Buildings

The Contractor shall be working around existing buildings which are occupied. Do not enter the buildings without prior approval of the Contracting Officer.

1.3.5 Utility Cutovers and Interruptions

a. Make utility cutovers and interruptions after normal working hours or on Saturdays, Sundays, and Government holidays. Conform to procedures required in the paragraph "Work Outside Regular Hours."

b. Ensure that new utility lines are complete, except for the connection, before interrupting existing service.

c. Interruption to water, sanitary sewer, storm sewer, telephone service, electric service, air conditioning, heating, fire alarm, compressed air, and LP Gas shall be considered utility cutovers pursuant to the paragraph entitled "Work Outside Regular Hours."

d. Operation of Station Utilities: The Contractor shall not operate nor disturb the setting of control devices in the station utilities system, including water, sewer, electrical, and steam services. The Government will operate the control devices as required for normal conduct of the work. The Contractor shall notify the Contracting Officer giving reasonable advance notice when such operation is required.

1.4 SECURITY REQUIREMENTS

Contract Clause "FAR 52.204-2, Security Requirements and Alternate II," "FAC 5252.236-9301, Special Working Conditions and Entry to Work Area," and the following apply:

1.4.1 Business Access Security Requirements, Camp Lejeune, NC

1.4.1.1 Business Access Definition

Contractor/subcontractor employees requiring installation access to MCB, Camp Lejeune or MCAS New River, N.C. must obtain a Business Access Identification Badge for that particular installation. Regularly scheduled delivery personnel, to include FEDEX, UPS, pick-up and deliveries, should also follow the Business Access guidelines described below. Personnel requiring Business Access Identification Badges shall submit all documentation listed below. Badges are not required if the contracted position requires the employee to obtain a Common Access Card (CAC) which will be identified separately within the Government contract.

1.4.1.2 Installation Security Access Requirements

Contractor shall accomplish the security requirements below within 10 days after award or prior to performance under the contract.

1.4.1.3 Business Access Identification Badge Requirement

In order to obtain a Business Access Identification Badge for access to MCB, Camp Lejeune, and satellite activities, or MCAS New River, NC, all personnel providing services under this contract shall be required to present the documentation below to the following offices, as applicable:

a. MCB, Camp Lejeune, NC and its satellite activities. Report as follows:

   1. Identification Card Center, 60 Molly Pitcher Road for badge (910-451-8444).

b. MCAS New River, NC. Report as follows:

   1. S-4 (Facilities Office), Bldg AS-211 (1st Deck) for registration on contractor's list (910-449-6310).

   2. Pass and Identification Office, Bldg AS-187 (1st Deck) for badge and vehicle decal (910-449-7695).

c. MARSOC Access Requirements:

   1. Department of Defense affliated personnel conducting official business or visiting MARSOC are required to submit a Visit Authorization Request (VAR) through their Security Manager or Faciltiy Security Manager (for Industry) via the Joint Personnel Adjudication System (JPAS), identifying the sponsor's name and phone number as ther POC.

      Submit VAR to the following MARSOC SMOS's :

      SCI- 209000943
      Collateral -209006

Avoid inconveniencing or delaying your requests by coordinating with the Security Management Office.

2. Non-DoD affiliated visitors or organizations that do not use JPAS for clearnace verification may submit a Visit Authorication Letter via fax (910-440-1100)to the SMO. The request must be on officical stationary, signed by the FSO or SM and contain the following visitor information:

FULL NAME
DATE OF BIRTH
CITIZENSHIP
DATES OF VISIT
PURPOSE OF VISIT
SSN
PLACE OF BIRTH
ACCESS & TYPE/DATE OF CLEARANCE
SPONSOR'S NAME AND PHONE NUMBER.

3. A Vendor Demonstration Agreement must be completed and filed with the G8, prior to arrival, when interacting with vendors/contractors (Policy Letter 1-11).

1.4.1.4 Documentation

a. Photo ID:

Valid state or federal issued picture identification card. Acceptable documents include state drivers license, DMV issued photo identification, or alien registration card.

b. Proof of Employee Citizenship or Legal Alien Status:

Acceptable documents include birth certificate, Social Security Cards, Immigration and Naturalization Service (INS) forms and passports.

c. Proof of Criminal Records Check:

Proof of a criminal records check from the county or state where the employee has resided for the previous two years (or length of legal residence for foreign nationals in the U.S. for less than two years). Criminal background records checks must be from a credible source. Many credible sources exist, but some examples include the County Courthouse, Infolink Screening Services, Inc. (www.infolinkscreening.com), IntegraScan Criminal Records Checks (www.integrascan.com), Intelius Employee Screening (www.Intelius.com), and Castle Branch www.castlebranch.com). Subsequent to the initial criminal background records checks, local criminal records checks shall be conducted annually prior to renewal of badges for reevaluation.

d. Letter Provided By Contracting Officer Indicating Contract:

Letter provided by Contracting Officer indicating contract, contract period and prime contractor. Proof of employment on a valid Government contract (e.g., a letter on company letterhead from the prime contractor including contract number and term).

1.4.1.5 Denial of Access

Installation access shall be denied if it is determined that an employee:

a. Is on the National Terrorist Watch List

b. Is illegally present in the United States.

c. Is subject to an outstanding warrant.

d. Has knowingly submitted an employment questionnaire with false or fraudulent information.

e. Has been issued a debarment order and is currently banned from military installations.

f. Is a Registered Sexual Offender, or has any Felony Conviction within the past two years.

1.4.1.6 Appeal Process

All appeals should be directed to the Base Inspector's Office for any individual that has been denied access to the Base.

1.4.1.7 Display and Disposition of Badges

Contractors/subcontractors shall prominently display their badges on their person at all times. Upon completion/termination of this contract or an individual's employment, the Contractor shall collect and turn in to the Pass & ID Office all badges. If the Contractor fails to obtain the employee's badge, the Pass & ID Office shall be notified within 24 hours. During the contract performance period contractors will immediately report instances of lost or stolen badges to the issuing pass and identification office.

1.4.1.8 Contractor and Subcontractor Vehicle Requirements

Each vehicle to be used in contract performance shall show the Contractor's or subcontractor's name so that it is clearly visible and shall always display a valid state license plate and safety inspection sticker. To obtain a vehicle decal, which will be valid for one year or contract period, whichever is shorter, Contractor or subcontractor vehicle operators shall provide to the Vehicle Registration Office, 60 Molly Pitcher Road for vehicle decal (910-451-1158):

a. An installation sponsor request forwarded to provost Marshall office.

b. A valid form of Federal or state government I.D.

c. If driving a motor vehicle, a valid driver's license, vehicle registration and proof of insurance.

Upon completion/termination of this contract or an individual's employment, the Contractor shall collect and turn in to Vehicle Registration all Government vehicle decals. If any are not collected, the Contractor shall notify the Vehicle Registration Office within 24 hours.

1.4.1.9 Security Checks

Contractor personnel and vehicles shall only be present in locations relevant to contract performance. All Contractor personnel entering the base shall conform to all Government regulations and are subject to such checks as may be deemed necessary to ensure that violations do not occur. Employees shall not be permitted on base when such a check reveals that their presence would be detrimental to the security of the base. Subject to security regulations, the Government will allow access to an area for servicing equipment and/or performing required services. Upon request, the Contractor shall submit to the Contracting Officer questionnaires and other forms as may be required for security purposes.

PART 2 PRODUCTS

Not Used.

PART 3 EXECUTION

Not Used.

-- End of Section --

SECTION 01 20 00.00 20

PRICE AND PAYMENT PROCEDURES
09/14

PART 1 GENERAL

1.1 REFERENCES

The publications listed below form a part of this specification to the extent referenced. The publications are referred to within the text by the basic designation only.

U.S. ARMY CORPS OF ENGINEERS (USACE)

EP-1110-1-8 (2009) Construction Equipment Ownership and Operating Expense Schedule

1.2 SUBMITTALS

Government approval is required for submittals with a "G" designation; submittals not having a "G" designation are for Contractor Quality Control approval. The following shall be submitted in accordance with Section 01 33 00 SUBMITTAL PROCEDURES:

SD-01 Preconstruction Submittals

EARNED VALUE REPORT; G

1.3 EARNED VALUE REPORT

1.3.1 Data Required

This contract requires the use of a cost-loaded Network Analysis Schedule (NAS). The information required for the Schedule of Prices will be entered as an integral part of the Network Analysis Schedule. Within 15 calendar days of notice of award, prepare and deliver to the Contracting Officer an Earned Value Report (construction contract) as directed by the Contracting Officer. Provide a detailed breakdown of the contract price, giving quantities for each of the various kinds of work, unit prices, and extended prices. Costs shall be summarized and totals provided for each construction category.

1.3.2 Schedule Instructions

Payments will not be made until the Earned Value Report from the cost-loaded NAS has been submitted to and accepted by the Contracting Officer. Identify the cost for site work, and include incidental work to the 5 ft line. Identify costs for the building(s), and include work out to the 5 ft line. Work out to the 5 ft line shall include construction encompassed within a theoretical line 5 ft from the face of exterior walls and shall include attendant construction, such as pad mounted HVAC cooling equipment, cooling towers, and transformers placed beyond the 5 ft line.

1.3.3 Real Property Assets

Real Property Assets identified in Section 01 78 00 CLOSEOUT SUBMITTALS, Paragraph "REAL PROPERTY RECORD" apply to work covered by this

specification.

Cost data accumulated under this section are required in the preparation of DD Form 1354. Coordinate with Section 01 78 00 CLOSEOUT SUBMITTALS, Paragraph "REAL PROPERTY RECORD".

NOTE: Real Property Unique Identifiers (RPUID's) will be provided by the Government but may not be available until later in the project schedule. Coordinate receipt of the RPUID's with the Contracting Officer and the Real Property Accounting Officer. Temporary RPUID's may be required until the actual RPUID's can be provided.

The Government will provide the Draft DD Form 1354, Transfer and Acceptance of Military Real Property filled in with the appropriate construction Category Codes to summarize the designed real property assets that apply to this contract. The Contractor shall meet with the Contracting Officer and the Real Property Accounting Officer during the Pre Construction Meeting and the Project Closeout Meetings to modify and include any necessary changes to the DD Form 1354. The Contractor shall obtain related Real Property Unique Identifiers (RPUID's) from the Real Property Accounting Officer during or following the Pre Construction Meeting. The Contractor shall provide the Interim DD Form 1354 that uses the appropriate division of the RPUID's/ Category Codes to represent the final constructed facility and include all associated cost. Coordinate the Contractor's Price and Payment structure with the structure of the RPUID's/ Category Codes.

Divide detailed asset breakdown into the RPUID's and related construction Category Codes and populate associated costs which represent all aspects of the work. Where assets diverge into multiple RPUID's/ Category Codes, divide the asset and provide the proportion of the assets in each Facility Number/ Category Code. Assets and related RPUID's/ Category Codes may be modified by the Contracting Officer as necessary during course of the work. Coordinate identification and proportion of these assets with the Government Real Property Accounting Officer.

1.3.4 Schedule Requirements for HVAC TAB

The field work Section 23 05 93 TESTING, ADJUSTING AND BALANCING FOR HVAC shall be broken down in the Earned Value Report from the cost-loaded NAS by separate line items which reflect measurable deliverables. Specific payment percentages for each line item shall be determined on a case by case basis for each contract. The line items shall be as follows:

a. Approval of Design Review Report: The TABS Agency is required to conduct a review of the project plans and specifications to identify any feature, or the lack thereof, that would preclude successful testing and balancing of the project HVAC systems. The resulting findings shall be submitted to the Government to allow correction of the design. The progress payment shall be issued after review and approval of the report.

b. Approval of the pre-field engineering report: The TABS Agency submits a report which outlines the scope of field work. The report shall contain details of what systems will be tested, procedures to be used, sample report forms for reporting test results and a quality control checklist of work items that must be completed before TABS field work commences.

c. Season I field work: Incremental payments are issued as the TABS field

work progresses. The TABS Agency mobilizes to the project site and executes the field work as outlined in the pre-field engineering report. The HVAC water and air systems are balanced and operational data shall be collected for one seasonal condition (either summer or winter depending on project timing).

d. Approval of Season I report: On completion of the Season I field work, the data is compiled into a report and submitted to the Government. The report is reviewed, and approved, after ensuring compliance with the pre-field engineering report scope of work.

e. Completion of Season I field QA check: Contract QC and Government representatives meet the TABS Agency at the jobsite to retest portions of the systems reported in the Season I report. The purpose of these tests are to validate the accuracy and completeness of the previously submitted Season I report.

f. Approval of Season II report: The TABS Agency completes all Season II field work, which is normally comprised mainly of taking heat transfer temperature readings, in the season opposite of that under which Season I performance data was compiled. This data shall be compiled into a report and submitted to the Government. On completion of submittal review to ensure compliance with the pre-field engineering report scope, progress payment is issued. Progress payment is less than that issued for the Season I report since most of the water and air balancing work effort is completed under Season I.

1.4 CONTRACT MODIFICATIONS

In conjunction with the Contract Clause "DFARS 252.236-7000, Modification Proposals-Price Breakdown," and where actual ownership and operating costs of construction equipment cannot be determined from Contractor accounting records, equipment use rates shall be based upon the applicable provisions of the EP-1110-1-8.

1.5 CONTRACTOR'S INVOICE AND CONTRACT PERFORMANCE STATEMENT

1.5.1 Content of Invoice

Requests for payment will be processed in accordance with the Contract Clause FAR 52.232-27, Prompt Payment Construction Contracts and FAR 52.232-5, Payments Under Fixed-Price Construction Contracts. The requests for payment shall include the documents listed below.

a. The Contractor's invoice.

b. The Earned Value Report from the cost-loaded NAS, showing in detail: the estimated cost, percentage of completion, and value of completed performance for each of the construction categories stated in this contract.

c. Updated Project NAS and reports required by the contract.

d. Contractor Safety Self Evaluation Checklist.

e. Other supporting documents as requested.

f. Updated copy of submittal register.

g. Invoices not completed in accordance with contract requirements will be returned to the Contractor for correction of the deficiencies.

h. Affidavit to accompany invoice (LANTDIV NORVA Form 4-4235/4 (Rev.5/81)).

i. Materials on Site.

1.5.2 Submission of Invoices

If NFAS Clause 5252.232-9301 is included in the contract, the listed documents shall be provided as attachments in Wide Area Work Flow (WAWF). The maximum size of each WAWF attachment is two megabytes, but there are no limits on the number of attachments. If a document cannot be attached in WAWF due to system or size restriction it shall be provided as instructed by the Contracting Officer.

Monthly invoices and supporting forms for work performed through the anniversary award date of the contract shall be submitted to the Contracting Officer within 5 calendar days of the date of invoice. For example, contract award date is the 7th of the month, the date of each monthly invoice shall be the 7th and the invoice shall be submitted by the 12th of the month.

1.5.3 Final Invoice

a. A final invoice shall be accompanied by the Contractor's Final Release. If the Contractor is incorporated, the Final Release shall contain the corporate seal. An officer of the corporation shall sign and the corporate secretary shall certify the Final Release.

b. For final invoices being submitted via WAWF, the original Contractor's Final Release Form must be provided directly to the respective Contracting Officer prior to submission of the final invoice. Once receipt of the original Final Release Form has been confirmed by the Contracting Officer, the Contractor shall then submit final invoice and attach a copy of the Final Release Form in WAWF.

c. Final invoices not accompanied by the Contractor's Final Release will be considered incomplete and will be returned to the Contractor.

1.6 PAYMENTS TO THE CONTRACTOR

Payments will be made on submission of itemized requests by the Contractor which comply with the requirements of this section, and will be subject to reduction for overpayments or increase for underpayments made on previous payments to the Contractor.

1.6.1 Obligation of Government Payments

The obligation of the Government to make payments required under the provisions of this contract will, at the discretion of the Contracting Officer, be subject to reductions and/or suspensions permitted under the FAR and agency regulations including the following in accordance with "FAR 32.503-6:

a. Reasonable deductions due to defects in material or workmanship;

b. Claims which the Government may have against the Contractor under or in connection with this contract;

c. Unless otherwise adjusted, repayment to the Government upon demand for overpayments made to the Contractor; and

d. Failure to provide up to date record drawings not current as stated in Contract Clause "FAC 5252.236-9310, Record Drawings."

1.6.2 Payment for Onsite and Offsite Materials

Progress payments may be made to the contractor for materials delivered on the site, for materials stored off construction sites, or materials that are in transit to the construction sites under the following conditions:

a. FAR 52.232-5(b) Payments Under Fixed Price Construction Contracts.

b. Materials delivered on the site but not installed, including completed preparatory work, and off-site materials to be considered for progress payment shall be major high cost, long lead, special order, or specialty items, not susceptible to deterioration or physical damage in storage or in transit to the construction site. Examples of materials acceptable for payment consideration include, but are not limited to, structural steel, non-magnetic steel, non-magnetic aggregate, equipment, machinery, large pipe and fittings,precast/prestressed concrete products, plastic lumber (e.g., fender piles/curbs), and high-voltage electrical cable. Materials not acceptable for payment include consumable materials such as nails, fasteners, conduits, gypsum board, glass, insulation, and wall coverings.

c. Materials to be considered for progress payment prior to installation shall be specifically and separately identified in the Contractor's estimates of work submitted for the Contracting Officer's approval in accordance with Earned Value Report requirement of this contract. Requests for progress payment consideration for such items shall be supported by documents establishing their value and that the title requirements of the clause at FAR 52.232-5 have been met.

d. Materials are adequately insured and protected from theft and exposure.

e. Provide a written consent from the surety company with each payment request for offsite materials.

f. Materials to be considered for progress payments prior to installation shall be stored in the Continental United States.

PART 2 PRODUCTS

Not Used.

PART 3 EXECUTION

Not Used.

-- End of Section --

THIS PAGE HAS BEEN INTENTIONALLY LEFT BLANK

SECTION 01 30 00

ADMINISTRATIVE REQUIREMENTS
09/14

PART 1 GENERAL

1.1 SUBMITTALS

Government approval is required for submittals with a "G" designation; submittals not having a "G" designation are for Contractor Quality Control approval. The following shall be submitted in accordance with Section 01 33 00 SUBMITTAL PROCEDURES:

SD-01 Preconstruction Submittals

View location map; G

Progress and completion pictures; G

1.2 VIEW LOCATION MAP

Submit to the Contracting Officer, prior to or with the first digital photograph submittals, a sketch or drawing indicating the required photographic locations. Update as required if the locations are moved.

1.3 PROGRESS AND COMPLETION PICTURES

Photographically document site conditions prior to start of construction operations. Provide monthly, and within one month of the completion of work, digital photographs, 1600x1200x24 bit true color minimum resolution in JPEG file format showing the sequence and progress of work. Take a minimum of 20 digital photographs each week throughout the entire project from a minimum of ten views from points located by the Contracting Officer. Submit a view location sketch indicating points of view. Submit with the monthly invoice two sets of digital photographs each set on a separate CD-R, cumulative of all photos to date. Indicate photographs demonstrating environmental procedures. Photographs for each month shall be in a separate monthly directory and each file shall be named to indicate its location on the view location sketch. The view location sketch shall also be provided on the CD as digital file. All file names shall include a date designator. Cross reference submittals in the appropriate daily report. Photographs shall be provided for unrestricted use by the Government.

1.4 MINIMUM INSURANCE REQUIREMENTS

Procure and maintain during the entire period of performance under this contract the following minimum insurance coverage:

a. Comprehensive general liability: $500,000 per occurrence

b. Automobile liability: $200,000 per person, $500,000 per occurrence for bodily injury, $20,000 per occurrence for property damage

c. Workmen's compensation as required by Federal and State workers' compensation and occupational disease laws.

d. Employer's liability coverage of $100,000, except in States where workers compensation may not be written by private carriers,

e. Others as required by State law.

1.5 CONTRACTOR SPECIAL REQUIREMENTS

1.5.1 Space Temperature Control, HVAC TAB, and Apparatus Inspection

All contract requirements of Section 23 09 23.13 22 BACnet DIRECT DIGITAL CONTROL SYSTEMS FOR HVAC Section 23 05 93 TESTING, ADJUSTING AND BALANCING FOR HVAC and Section 26 08 00 APPARATUS INSPECTION AND TESTING shall be accomplished directly by a first tier subcontractor, including the Commissioning Agent. No work required by Section 23 09 23.13 22 23 05 93 or 26 08 00 shall be accomplished by a second tier subcontractor.

1.6 SUPERVISION

Have at least one qualified supervisor capable of reading, writing, and conversing fluently in the English language on the job site during working hours. In addition, if a Quality Control (QC) representative is required on the contract, then that individual shall also have fluent English communication skills.

1.7 PRECONSTRUCTION CONFERENCE

After award of the contract but prior to commencement of any work at the site, meet with the Contracting Officer to discuss and develop a mutual understanding relative to the administration of the value engineering and safety program, preparation of the schedule prices, shop drawings, and other submittals, scheduling programming, prosecution of the work, and clear expectations for the DD Form 1354 submittals. Major subcontractors who will engage in the work shall also attend.

1.8 FACILITY TURNOVER PLANNING MEETINGS (NAVFAC Red Zone - NRZ)

Key personnel will meet to identify strategies to ensure the project is carried to expeditious closure and turnover to the Client. Start the turnover process at the Pre Construction Conference meeting and convene at the Facility Turnover Meetings once the project has reached approximately 75 percent completion or three to six months prior to Beneficial Occupancy Date (BOD), whichever comes first. The Contracting Officer's Representative will lead the meetings and guide discussions based on an agenda provided by the Government. See attached NAVFAC Red Zone Facility Turnover Planning Meeting AGENDA for typical meeting agenda. The facility Turnover effort shall include the following:

a. Pre Construction Meeting - Contracting Officer's Technical Representative (COTR) will provide the Facility Turnover Checklist and the Contractor, Client, and NAVFAC Representatives will compare Contractor's schedule to Facility Turnover Checklist to ensure all Contractor Checklist Items are included in the schedule and to discuss the scheduling impact of Client and NAVFAC Checklist Items.

b. Facility Turnover Meetings

1. Fill in the Facility Turnover Checklist including Contractor, Client, and NAVFAC Checklist Items and assign a person to be responsible for each item and a due date. The Contractor's

Representative will facilitate the assignment of responsibilities, fill out the Facility Turnover Checklist, and discuss DD Form 1354 requirements. See attached Facility Turnover Checklist Items.

2. Review the Contractor's updated schedule. The Contractor shall develop a POAM for the completion of all Contractor, Client, and NAVFAC Checklist items.

3. Confirm that all Facility Turnover Checklist items will be completed on time for the scheduled Facility Turnover.

1.8.1 Facility Turnover Meeting Attendees

The following key personnel shall attend the Facility Turnover Meetings: Contractor QC Manager, Superintendent, Major Subcontractors, Designer-of-Record, Contracting Officer's Representative, Representative(s) of NAVFAC, the Facility Owner, and the Client.

1.9 PARTNERING

To most effectively accomplish this contract, the Government requires the formation of a cohesive partnership within the Project Team whose members are from the Government, the Contractor and Subcontractors. Key personnel representing Base Facilities, the Designer of Record (DOR), principal individuals from NAVFAC MIDLANT and from the Resident Officer in Charge of Construction (ROICC) office, the project sponsor, and representative(s) of the facility user will be invited to participate in the partnering process. Key members of the Contractor and subcontractor teams, including senior management, must participate.

The partnership will draw on the strengths of each organization in an effort to achieve a quality project done right the first time, within budget, on schedule, and without any safety mishaps.

1.9.1 Formal Partnering

Provide and host the Partnering sessions with key personnel of the Project Team, including Contractor personnel and Government personnel. The Contractor shall pay all costs associated with the partnering effort including the Facilitator, the meeting room, and other incidental items. In exception, participants shall bear their own costs for meals, lodging, and transportation associated with the Partnering sessions.

Before a Partnering session, coordinate with the Facilitator all requirements for incidental items (such as audio-visual equipment, easels, flipchart paper, colored markers, note paper, pens/pencils, colored flash cards, etc.), and have these items available at the Partnering session. Provide copies of documents for distribution to all attendees.

The Facilitator shall be experienced in conducting Partnering Workshops, and shall be acceptable to both the Government and the Contractor. The Facilitator is responsible for leading the team in a timely manner and making sure that issues are identified and resolved. A list of Partnering Facilitators is available from the Contracting Officer.

1.9.1.1 Initial Partnering Session

a. Shall be a duration of one day minimum.

b. Will include participants as listed under paragraph "Facility Turnover Meeting Attendees".

c. Should be held at a location off base as agreed to by the partners.

e. May take place with the Preconstruction Conference.

1.9.1.2 Follow-on Partnering Session(s)

a. Shall be held quarterly or as agreed to by the partners.

b. May be held concurrently with other scheduled meetings such as QC or scheduling.

c. May be held at a location off base, the project site, or in government facilities on base.

d. May include only participants required to resolve current issues.

e. Will generally last a half day or less and may utilize electronic means if mutually acceptable to all parties.

f. Will not require a facilitator unless desired by the partners.

1.10 AVAILABILITY OF CADD DRAWING FILES

After award and upon request, the electronic "Computer-Aided Drafting and Design (CADD)" drawing files will only be made available to the Contractor for use in preparation of construction data related to the referenced contract subject to the following terms and conditions. Request specific drawing numbers of files required; the entire set of drawing files will not be provided.

Data contained on these electronic files shall not be used for any purpose other than as a convenience in the preparation of construction data for the referenced project. Any other use or reuse shall be at the sole risk of the Contractor and without liability or legal exposure to the Government. The Contractor shall make no claim and waives to the fullest extent permitted by law, any claim or cause of action of any nature against the Government, its agents or sub consultants that may arise out of or in connection with the use of these electronic files. The Contractor shall, to the fullest extent permitted by law, indemnify and hold the Government harmless against all damages, liabilities or costs, including reasonable attorney's fees and defense costs, arising out of or resulting from the use of these electronic files.

These electronic CADD drawing files are not construction documents. Differences may exist between the CADD files and the corresponding construction documents. The Government makes no representation regarding the accuracy or completeness of the electronic CADD files, nor does it make representation to the compatibility of these files with the Contractors hardware or software. In the event that a conflict arises between the signed and sealed construction documents prepared by the Government and the furnished CADD files, the signed and sealed construction documents shall govern. The Contractor is responsible for determining if any conflict exists. Use of these CADD files does not relieve the Contractor of duty to fully comply with the contract documents, including and without limitation, the need to check, confirm and coordinate the work of all contractors for the project.

If the Contractor uses, duplicates and/or modifies these electronic CADD files for use in producing construction data related to this contract, all previous indicia of ownership (seals, logos, signatures, initials and dates) shall be removed.

1.11 ELECTRONIC MAIL (E-MAIL) ADDRESS

The Contractor shall establish and maintain electronic mail (e-mail) capability along with the capability to open various electronic attachments in Microsoft, Adobe Acrobat, and other similar formats. Within 10 days after contract award, the Contractor shall provide the Contracting Officer a single (only one) e-mail address for electronic communications from the Contracting Officer related to this contract including, but not limited to contract documents, invoice information, request for proposals, and other correspondence. The Contracting Officer may also use email to notify the Contractor of base access conditions when emergency conditions warrant, such as hurricanes, terrorist threats, etc. Multiple email addresses will not be allowed.

It is the Contractor's responsibility to make timely distribution of all Contracting Officer initiated e-mail with its own organization including field office(s). The Contractor shall promptly notify the Contracting Officer, in writing, of any changes to this email address.

PART 2 PRODUCTS

Not Used.

PART 3 EXECUTION

Not Used.

-- End of Section --

THIS PAGE HAS BEEN INTENTIONALLY LEFT BLANK

NAVFAC Red Zone
Facility Turnover Planning Meeting

AGENDA

I. Introduction and Overview – Purpose CM

The purpose of the Facility Turnover Planning Meeting is to address elements within the project team's purview – schedule management, assure completed facility complies with contract requirements, and other contractual issues. Each member of the project delivery team (Client, NAVFAC, and the contractor) has critical responsibilities to ensure timely completion and turnover of the new facility and each member should execute the NRZ process to achieve this end. The NRZ process provides a final re-focusing of attention to details of those key elements critical for a successful construction contract completion. In implementing NRZ processes, the NAVFAC/Contractor/Client team take a collective "snapshot" of contract status, identifying remaining actions to be accomplished, and confirm required resources needed for successful contract completion and turnover to the Client.

The Facility Turnover Planning Meeting is a collaborative effort between the Client, NAVFAC, and the contractor and results in a completed "NRZ Checklist/POAM Items" list that identifies the major items (and their due dates) that must be completed by the Contractor, the Client and the NAVFAC team to ensure timely completion of the contract.

II. Attendees

NAVFAC Echelon IV (PM); NAVFAC FEAD/ROICC Team (AROICC, CM, ET/QA, Contracting Officer); Client Team (Project Manager, Program Coordinator, User/Tenant); Contractor Team (Project Manager, Project Superintendent, CQC Manager)

III. Schedule to Completion (POAM)	Contractor
IV. Schedule of Final Outfitting and Occupancy (POAM)	Client
V. Critical feature(s) of project (POAM)	CM
VI. Transfer of Maintenance Responsibility	CM
VII. Systems training & O&M Manuals (POAM)	CQC Manager
VIII. Other Items to include on NRZ checklists	All
IX. Summary of Required Actions and Responsibility	CM

Guidelines for conducting Facility Turnover Planning Meeting are as follows:

a. Meeting is held at approximately 75% construction contract completion or three to six months prior to BOD. NAVFAC representatives will include the Project Manager, Construction Manager/AROICC (CM) and Design Manager (DM), as appropriate. The contractor representatives include applicable prime contractor staff and decision-makers from major subcontractors. Design-Build contractors will have A-E representatives attending. The Client should include representatives from Public Works Officer (PWO) staff, a Client scope and financial decision maker, a user tenant representative, a facility start-up person, and others such as SPAWAR, Government Telecommunications Contractor, telephone, and furniture contractor, etc.

b. The purpose of the meeting is to plan the remaining work, identify critical project features that still need to be completed (such as “soft” construction contract requirements as shown on the NRZ Checklist/POAM Items), and to complete the filling out of the “NRZ Checklist/POAM Items”.

c. The contractor, client and NAVFAC provide a POC and due date for each item on their checklist. The team fills in the checklists by selecting items applicable to the project, selects due dates on each item, and appoints a person who has responsibility to ensure the item gets completed by the due date. The CM will be responsible to monitor the milestones.

NRZ Checklist/POAM Items

The tables below provide typical NRZ checklist items for contractor, Client, and NAVFAC actions (Tables 1, 2, and 3, respectively). Items listed on the checklists are required to remain on the checklists if they are part of the project/contract or required by construction convention. Items not listed on the checklists, but required in the contract or by construction convention, must be added to the checklists by the contractor, Client and NAVFAC. Checklists are applicable to all contracts no matter what Category of Work.

The Point of Contact and due date shall initially be determined during the Facility Turnover Planning Meeting by the NAVFAC, client and contractor leads. During execution of the NRZ process, for each item on the entire list, the Construction Manager (CM) shall indicate date completed and initial to indicate completion of the item. If a party fails to complete an item by the due date, this should be noted on the checklist and new due date established and indicated. The completed NRZ Checklist/POAM shall be placed in the contract file.

Table 1

Contractor Checklist Items	Point of Contact	Due Date	Actual Complete Date	CM Initials	Notes
a. Construction Completion Schedule					
b. Facility Delivery Closeout:					
Duct Air Leakage Testing					
HVAC System Test & Balance					
ACATS Controls Testing					
Conduct Second Seasons TAB					
Electrical Systems Testing					
Final utility systems connections (power, water, etc.)					
Superchlorination of potable water systems					
Plumbing / Other Mechanical Testing					
Elevator Certification(s)					
Specialized Equipment & Systems Inspections (Boilers, UPV, etc.)					
Fire Protection Systems Inspections and Performance Verification					
Communications / IT Systems Testing					
Security Systems Testing					
Other Specified Building Performance Requirements					
c. Other Contractor Items:					
Delivery of O&M Manuals					
Delivery of Equipment/Product Warranty List/Tag					
O&M/OMSI Training of Navy Personnel					
Site Restoration, if applicable					

Contractor Checklist Items	Point of Contact	Due Date	Actual Complete Date	CM Initials	Notes
Landscaping Complete					
Pre-Final Inspection					
Final Inspection and Acceptance					
Delivery of Spare Parts, Extra Stock, Special Tools, etc					
Delivery of As-Built Drawings					
Delivery of Utility Record Drawings (if applicable)					
Delivery of Utility As-Built Drawings (if applicable)					
Beneficial Occupancy Date (BOD)					
Final Demobilization and Clean-up Completed					
Remove Construction Fence & Associated Coordination					
Pre-warranty Conference					
Project Close-out Meeting					
Coordination and Delivery of Facility Signage					
Final Cleaning					
Replace Construction Lock Cores and Re-keying					
Punch List Completion					
Provide DD1354 to Government CM					

Table 2

Client Checklist Items	**Point of Contact**	**Due Date**	**Actual Complete Date**	**CM Initials**	**Notes**
Modification to FSC or BOSC to maintain/service new facility -Telephone service contract -Utilities service contract -Custodial service contract					
Installation of communications for phones and computers					
Government Telecommunications Installations or other networks					
Delivery and installation of client furnished furniture					
Delivery and installation of client furnished equipment					
User move-in					
GFE status/delivery schedule (GFCI, GFGI)					
Coordination of Intrusion Detection Systems and Physical Security Equipment					
Process operating permits					
Recycled/recovered materials report					
Coordination of IT and Communication Infrastructure and Devices (incl. CAT IV)					
Ribbon-cutting ceremony					

Table 3

NAVFAC Checklist Items	Point of Contact	Due Date	Actual Complete Date	CM Initials	Notes
Client walk-thru prior to pre-final inspections, if appropriate					
Schedule client satisfaction post BOD follow-up					
Schedule Government inspections of specialized equipment (e.g., Boiler/pressure vessels, elevators, UPS, SCIF shielding requirements, medical certifications, generators/switchgear)					
Provide keying plan to contractor					
Confirm utilities availability for final connections by contractor					
Startup utilities					
Mechanical Acceptance					
Resolve contract modifications & requests for equitable adjustment					
Contractor final release					
Return unobligated funds					
Process final payment					
Process recycled/recovered materials report					
Closeout actions on construction permits (e.g., NPDES)					
A-E and Construction Contractor Evaluations (ACASS/CCASS)					
Contractor QC Evaluation					
Complete Installed Property List and DD 1354					
Sign & provide Interim DD1354 to activity Real Property Accountability Officer NLT BOD					

THIS PAGE HAS BEEN INTENTIONALLY LEFT BLANK

Performance Assessment Plan
MONTHLY EVALUATION

MONTH: _____YEAR:_____

Evaluation Factor	Yes	No	N/A	Comments
Experience of Personnel 1. Did the team identified in the proposal actively participate in the project? 2. If personnel substitutions were needed, was the degree of technical competence maintained?				
Working Relationships 1. Did the Construction team participate in the design process (i.e. attend meetings, provide insight, etc.)? Were the coordination meetings between Construction and Design team personnel documented? 2. Did the Design team participate in the construction process (i.e. attend CQC meetings, perform field oversight, etc.)? Were coordination meetings between Construction and Design team personnel documented? 3. Did the collaboration between the Construction and Design Team deliver a high value innovative facility? - Were Total Operating Cost minimized - What LEED points can be obtained - Was energy efficiency optimized, and the energy goals exceeded. 4. Was the budget management process clear; was an estimate submitted on time with each design submittal. Was the estimate updated to reflect the changes in the design submittal? 5. Did the Contractor's team effectively manage the project budget and the User's requirements to meet the customer's needs? Was project budget and emphasis in cost control exhibited in the estimate? (Contractor to document in comments block				

materials/systems innovations and provision of higher quality than required in the RFP Part 4) *Additional factors to be developed during Partnering.*				
Quality Control 1. Were re-submittals of design deliverables or construction rework required this month? 2. Were as built redlines updated this month? *Additional factors to be developed during Partnering.*				
Timely Performance 1. Is the Contractor on schedule? 2. Is the Contractor maintaining the schedule? (Can the Government confirm the project is on schedule?) 3. Is the Contractor following his schedule? *Additional factors to be developed during Partnering.*				
Effectiveness of Management 1. Did the Government need to intercede in resolving a subcontractor issue? *Additional factors to be developed during Partnering.*				
Compliance with Labor Standards 1. Did payrolls have to be resubmitted this month due to inaccuracies or errors? *Additional factors to be developed during Partnering.*				
Compliance with Safety Standards 1. Were there any lost time accidents this month?				

Additional factors to be developed during Partnering.				

GENERAL PERFORMANCE COMMENTS THIS MONTH:

Concurrence:

CM/ROICC Representative _____Date_____.

Project Manager _____Date_____.

Contractor Representative _____Date_____.

THIS PAGE HAS BEEN INTENTIONALLY LEFT BLANK

SECTION 01 30 01.00 22

DESIGN, PROCUREMENT, AND INSTALLATION OF FURNITURE, FIXTURES, AND EQUIPMENT
09/14

PART 1 GENERAL

1.1 REFERENCES

The publications listed below form a part of this specification to the extent referenced. The publications are referred to within the text by the basic designation only.

UNIFIED FACILITIES CRITERIA (UFC)

UFC 3-120-10 (2006; Change 1, 2007) Interior Design

1.2 SUBMITTALS

Government approval is required for submittals with a "G" designation; submittals not having a "G" designation are for Contractor Quality Control approval. The following shall be submitted in accordance with Section 01 33 00 SUBMITTAL PROCEDURES:

SD-02 Shop Drawings

Preliminary (Pre-Final) FF&E Package; G, ID NAVFAC MidLant Interior Design

Final FF&E Package; G, ID NAVFAC MidLant Interior Design

Best Value Determination; G, ID NAVFAC MidLant Interior Design (FF&E Package Only)

SD-07 Certificates

Contractor's Interior Designer's Qualifications; G, ID NAVFAC MidLant Interior Design

SD-11 Closeout Submittals

Punch List Documentation; G

Factory Ordering Documentation; G

1.3 GENERAL REQUIREMENTS

Furnishings, Fixtures, and Equipment (FF&E) shall include, but is not limited to; furniture, appliances, and other miscellaneous items to support facility functions. FF&E shall be fully integrated with the

building systems and finishes. FF&E may also include specialty items for which the customer activity shall be responsible for specifying.

The design and documentation of the FF&E shall be funded as the Interior Design Services Option . The purchase and installation of the FF&E Package shall be funded separately as the FF&E Planned Modification. The Government FF&E budget on the Bid Schedule/Price Proposal Form for the FF&E Planned Modification is $81,000 for the Base Bid for FF&E . These figures do NOT include the Contractor's Handling and Administration Rate (HAR). This Government FF&E estimate shall not be altered by Contractors during the bid process.

All FF&E items are subject to the Buy American Act.

1.4 INTERIOR DESIGN A SERVICES OPTION

1.4.1 Qualifications and Affiliations

Provide the Services of an Interior Designer as follows:Per UFC 3-120-10, The Interior Designer of Record, hereafter referred to as the Prime Contractor's Interior Designer, shall be certified by the National Council for Interior Design Qualification (NCIDQ).

The Prime Contractor's Interior Designer, Design Firm owners, and any Specialists shall NOT have any affiliation with any furniture, fixture, or equipment products, any furniture dealership or manufacturers. Provide documentation of the Prime Contractor's Interior Designer's Qualifications and significant experience. The Government reserves the right to approve/disapprove the Prime Contractor's Interior Designer.

1.4.2 Concept FF&E Package

Concept FF&E package, prepared by the NAVFAC MidLant Interior Designer , indicating the salient characteristics of all required FF&E items identified to date and CADD drawings, will be provided to the Prime Contractor. As a separately priced option, the Prime Contractor shall provide the services of a Certified Interior Designer to function as Prime Contractor's Interior Designer , to prepare and provide the Final, Best Valued FF&E Package and procurement data based on the Concept FF&E package.

All fixed and movable furnishings selections shall be closely coordinated with the final construction documents and interior finishes. The Prime Contractor's Interior Designer shall be required to validate all FF&E requirements with the Activity, make any necessary changes to the FF&E, and interior building finishes. Per UFC 3-120-10, the (FF&E) includes the design, selection, specification, color coordination, and procurement documentation of the required items necessary to meet the functional, operational, sustainability, and aesthetic needs of the facility. The FF&E package shall be fully integrated with the design, construction, and schedule of all building finishes and all building systems (HVAC, Plumbing, Fire Protection, Communuications, Electrical, Data, Architecture, etc. All outlets, switches, fire extinguishers, thermostats, etc. shall be fully accessible. All sprinkler heads, ADA, etc. clearances shall be accommodated.

The Prime Contractor's Interior Designer shall also attend walk-throughs and attend any and all required meetings to accomplish this task. The

Contractor's Interior Designer shall be responsible for designing and providing specifications for procurement of all FF&E , to include delivery and installation, for the facilities built under this contract as directed by the NAVFAC MidLant Interior Designer. FF&E specifications shall be based on NAVSUP Blanket Purchase Agreements (BPA's), GSA schedules, and other Federal contracts and complying with priorities found in FAR Part 8.404. For the FF&E packages, the utilization of the current NAVSUP BPA list is required for BVD Analysis Request for Pricing. The current NAVSUP BPA list will be provided at the time of the Interior Design Orientation meeting.

1.5 FURNISHINGS, FIXTURES, AND EQUIPMENT (FF&E) SUBMITTALS FOR THE INTERIOR DESIGN SERVICES OPTION

Develop design as described and in accordance with the Activity requirements. Include in the design all loose furnishings required to produce an optimum functional facility, consistent with quality commercial design. This project also includes the preparation of specific detailed information for each selected item. Each submittal shall demonstrate thorough interaction with the Activity requirements and complete coordination with the facility design and the Structural Interior Design (SID).

a. The Activity will supply the Contractor's Interior Designer with a complete list of all existing FF&E, to include sizes, utility requirements, weight, etc., to be relocated to the new facility

b. For all projects, including fast track projects, the Prime Contractor shall be responsible for sufficiently scheduling all FF&E and any revisions to SID submittals early enough to obtain the required government approvals, and meet all ordering and installation lead times to complete the project by the contract completion date.

These are minimum requirements and the Prime Contractor shall be prepared to provide any/all additional meetings and submittals that may be necessary to support the FF&E design effort and coordination.

1.5.1 FF&E Requirements (Interior Design Orientation) Meeting

This meeting shall occur at the Pre-Construction meeting or via conference call prior to the FF&E "Over the Shoulder" Review and the development of the FF&E package. The NAVFAC MidLant Interior Designer will provide the Contractor's Interior Designer the basis of design package, templates of the submittal forms, review the Best Value Determination (BVD) process, discuss the number of Best Value Determinations required and discuss Blanket Purchase Agreement (BPAs), GSA or other mandatory sources to consider.

1.5.2 FF&E "Over the Shoulder" Review

Prior to the Concept Presentation and Best Value Determination (BVD) Analysis, the Contractor's Interior Designer a shall meet with the NAVFAC MidLant Interior Designer for an "over-the-shoulder" review to present preliminary options. These can be presented in a "loose" format for preliminary approval prior to the Activity presentation. The "over-the-shoulder" review meeting shall be held at NAVFAC MidLant, located in Norfolk, VA.

1.5.3 FF&E Concept Presentation

The Prime Contractor's Interior Designer shall present the NAVFAC MidLant approved Preliminary (Pre-final) FF&E Package to the Activity, located at Camp Lejeune, NC for approval. This presentation shall include loose format samples and catalog cuts. Sample boards are not required. Minutes of this meeting shall be submitted to the NAVFAC MidLant within 7 business days.

1.5.4 Best Value Determination(BVD) Analysis "Over the Shoulder Review"

See Paragraph entitled "BEST VALUE DETERMINATION".

Prior to the Best Value Determination (BVD) Analysis, pricing proposals must be prepared and solicited by the Prime Contractor's Interior Designer . In preparation of the solicitations, the Contractor's ID shall meet with the NAVFAC MidLant Interior Designer for an "over-the-shoulder" review of the solicitation package. At this time, a copy of the most current NAVSUP BPA vendor list will be provided to the Contractor's Interior Designer. Provide (1) hard copy of each solicitation te for review. The "over-the-shoulder" review meeting shall be held via conference call.

The Contractor's Interior Designer must provide a copy of the BVD Analysis Request for Pricing cover letter to the Contractor for review and comment prior to the BVD Analysis "Over the Shoulder Review" meeting.

BVD Analysis Solicitation Package shall include the following;

a. Copy of the BVD Analysis Request for Pricing cover letter.

b. BVD Analysis Request for Pricing Spreadsheet/Questionnaire populated with "basis of design" item product photos & descriptions.

c. Technical Specification to establish minimum acceptable requirements.

d. Project Specific Room/Furniture Typicals.

e. Plans with Legends coded to the BVD Analysis Request for Proposal (PDF format).

1.5.5 BVD Submittal and "Over the Shoulder Review"

After pricing proposals have been received and evalutated, the Prime Contractor's Interior Designer a shall submit one (1) copy of the Preliminary BVA BVD package to the NAVFAC MidLant Interior Designer and one (1) copy to the MARSOC User Representative. An electronic copy shall be sent to the NAVFAC MidLant Contracting Officer. The "over-the-shoulder" review meeting shall be held via conference call to review the results of the solicitation and determine a best value recommendation. The BVD Submittal shall be in a 3-ring binder and shall include the following items for review and approval:

a. Cover Title Page (project name, project #, location, submittal date, submittal title)

b. Table of Contents.

c. Point of Contact List.

d. Narrative of Interior Designer Objectives.

e. BVD Analysis Request for Pricing Spreadsheet/Questionnaire completed by all bidders and completed Questionnaire.

f. Copy of all information sent to bidders and documentation that all required sources were contacted.

g. Back-up Information submitted by each bidder (cut sheets/highlighted pricing sheets/technical specifications, pricing, dealer and manufacturer qualification for each product showing that products meets all requirements). Provide in CD format and include within each binder.

h. Response(s) from UNICOR.

i. BVD Analysis Pricing Evaluation Spreadsheet comparing bidder quotes/responses.

j. Contractor's Interior Designer recommendation for the Best Value vendor and justifications.

1.5.6 Preliminary FF&E Submittal

The Preliminary submittal shall be presented to the Activity and NAVFAC MidLant in loose format at a meeting to occur at the Activity, located at Camp Lejeune, NC. Five (5) submittals will be required; (1) for the NAVFAC MidLant Interior Designer, (1) for the ROICC, (1) for IDD, (1) for the MARSOC User Representative, and (1) for the Activity.

Submit the following in a 3-ring binder (with the exception of the 16x20 FF&E color boards for the Activity only) for review and approval:

a. Cover Title Page (project name and number, submittal date and title).

b. Table of Contents.

c. Point of Contact List (includes contact info for recommended Best Value BPA Holder(s) vendors and subcontractors).

d. Preliminary Item list and Cost Summary to include shipping, freight, handling, professional installation, project management, HAR and applicable sales tax.

e. Preliminary Procurement Data Spec Sheets for each product indicating general appearance as well as proposed finish and fabric selections.

f. Item placement plans coded to the Item List/Cost Summary list and Procurement Data Spec Sheets.

g. Technical Specifications used in bid request for all furniture, fixtures and equipment etc.

h. FF&E - 16x20 inch color boards of furniture and finishes specified for Activity presentation to indicate overall design intent (1 copy required for Activity only).

i. FF&E - Preliminary Finish/Fabric Selections and Samples attached to boards in 8" x 10" binder format inusing edge-reinforced, heavy-duty plastic sheet protectors for each board/sheet.

j. Copy of Quote(s)/Bill of Materials (BOM) on letterhead from the vendor(s) determined to be the best value. Code BOM line items to Cost Summary Item Codes.

1.5.7 Final FF&E Submittal

The Final FF&E Package shall be due 9 months prior to BOD following the receipt of review comments on the preliminary submittals and shall be in the format described below or the format provided by the NAVFAC MidLant Interior Designer and the UFC 3-120-10 Interior Design.

These are minimum requirements and the Contractor shall be prepared to provide any additional meetings and submittals that may be necessary to support the Interior Design effort and coordination.

The Final FF&E Submittal shall be submitted in a 3-ring binder for review and approval.

The number of final submittals required shall be Five (5) total; One each for the NAVFAC MidLant Interior Designer, the ROICC, IDD, MARSOC User Representative, and the Activity.

The Final FF&E Submittal and shall include the following;

a. Cover Title Page with project name, project #, submittal date, submittal title identified on binder cover and spine.

b. Table of Contents.

c. Point of Contact List which includes contact info for recommended Best Value BPA Holder(s) vendors and subcontractors.

d. Final item list and Cost Summary to include shipping, handling, freight, professional installation, project management, HAR and any applicable sales tax.

e. Final Procurement Data Spec Sheets for each product indicating final finish and fabric selections.

f. Final Finish Selections and Memo Samples for the FF&E submitted in 8 x 10 binder format, using heavy-duty plastic sheet protectors.

g. Copy of Final Quote(s)/Bill of Materials (BOM) on letterhead from the vendor(s) determined to be the Best Value. Code BOM line items to the Cost Summary Item Codes.

h. Best Value Determination Guidelines sheets; completed and signed by the Contactor's Interior Designer (FF&E) .

i. Final Item Placement Plans coded to the Item list/Cost Summary, Procurement Data Sheets and specifications.

j. Technical specifications used in the bid request.

k. CD copy of the final binder.

1.5.8 Punch List:

See section 2.1.13 Punch List.

1.5.9 FF&E and Interior Finish Construction Submittals

Submit any revisions or deviations caused by discontinued items or NAVFAC MidLant required changes to the Contracting Officer for approval by the NAVFAC MidLant Interior Designer. All submittal due dates for the FF&E, shall be reflected in the Contractor's construction schedule. Changes to the FF&E schedule shall be submitted to the government Interior Designer for approval. The Final packages shall be submitted no later than 9 months prior to the contract completion date.

1.6 BEST VALUE DETERMINATION

A Best Value Determination(BVD) is required by FAR 8.404 when placing orders against Federal Supply Schedules for the selection of furniture and furnishings. Best Value is defined in FAR 2.101 as ensuring that the order to be placed under a Federal Supply Schedule results in the lowest overall cost alternative (considering price, special features, administrative costs and client's needs) to meet the government's needs.

a. A (BVD) shall be performed on a minimum of three manufacturers for orders exceeding a total procurement of $3000 from an individual manufacturer. Multiple BVDs may be required in order to complete the final FF&E package.

b. The required quantity of BVD's to be performed will be determined by the NAVFAC MidLant Interior Designer during the design phase and is dependent on the appropriate NAVSUP BPA category(s) to be utilized and specific project requirements.

c. Documentation shall be provided to the Government with the final FF&E package. Specific Documentation is indicated in the Preliminary BVA Submittal and "Over the Shoulder Review." The BVD Statement shall be completed and signed by the contractor's interior designer.

The Prime Contractor's Interior Designer is responsible for the following written BVD justifications:

1.6.1 Total procurement of $3,000 or less

For any procurement in the FF&E package with a value of $3,000 or less, the Interior Designer may utilize any BPA holder. If the BPA holders cannot supply the item, then any other manufacturer may be utilized.

1.6.2 Total procurement greater than $3,000 and less than $150,000

For any procurement in the FF&E package with a value greater than $3,000 and $150,000 or less, the Prime Contractor's Interior Designer shall always review pricing from at least three manufacturers as well as UNICOR. In addition to the review of published list prices, the Contractor's Interior Designer must confirm the pricing with the vendor. Manufacturer's quotes are NOT required. The BVD form must be completed and submitted for all FF&E procurements greater than $3,000 and $150,000 or less.

1.6.3 Total procurement greater than $150,000

From all BPA holders under the applicable group for FF&E procurements greater than $150,000, UNICOR must always be solicited. The Prime Contractor's Interior Designer shall develop performance criteria and project requirements based on a generic design for the BPA holders and UNICOR to develop a price and performance proposal. The BVD form must be completed and submitted for all FF&E procurements greater than $100,000 and manufacturer's quotes and a summary of all proposals must be attached.

1.6.4 UNICOR

Federal Prison Industries (UNICOR) must be considered as part of all BVDs. This must be done by sending an email with the requirements and evaluation criteria. If they are not comparable in one or more areas of price, quality, and time of delivery, the designer can specify product under NAVSUP BPA or GSA schedule.

1.6.5 Evaluation Factors

The Best Value determination Determination shall address issues such as:

a. Space planning; human factors data related to anthropometrics (reach, clearance, adjustability), space, and acoustics.

b. Ergonomics.

c. Product quality (including construction and materials); sustainability features, product warranties; history of the product and/or manufacturer.

d. Ability to service products through dealers or others within a certain geographical range of the project.

e. Price (including freight).

f. Aesthetics.

g. Appropriateness; and lighting, power and telecommunications systems management and/or coordination as related to the facility (when applicable); and other project specific factors as identified and/or required.

h. Emphasis shall be to create a fully integrated design solution by providing quality products to meet the functional needs of the customer. Customer preferences shall be considered. The focus shall be on the best overall value. Use the NAVFAC Best Value Determination forms provided by the NAVFAC MidLant Interior Designer.

PART 2 FF&E TURNKEY EFFORT

2.1 FF&E PLANNED MODIFICATION

As a planned modification, provide procurement and installation coordination of the complete and usable Final FF&E package. The FF&E Package must include shipping, freight, handling, installation and the Prime Contractor's FF&E Handling and Administration Rate (HAR) percentage as applied to the final total cost.

2.1.1 Authorization

The Government will provide separate funding for procurement and installation coordination of the FF&E package. Construction funds will not be used. Upon receipt of required funding, the Prime Contractor shall be authorized by the Contracting Officer, as a planned modification to the construction contract, to procure and install all Final FF&E utilizing NAVSUP Blanket Purchase Agreements (BPA's), GSA schedules, and other Federal contracts and complying with priorities found in FAR Part 8.404. The Prime Contractor will be expected to procure and coordinate the installation of the approved Final FF&E package exactly as specified, or approved equal. The amount of the modification will be the actual cost of these items from the Federal Government price schedules (NAVSUP BPAs and/or GSA), including any freight and installation charges from the furniture supplier as well as the Prime Contractor's HAR and any applicable state sales tax. The HAR includes all of the Prime Contractor's effort related to storage, coordination, handling, administration of subcontractors, and all other associated costs and profit for the procurement of FF&E.

The Government will indicate the FF&E estimate based on the Concept Design in the contract solicitation Price Proposal Form (Bid Schedule). These Government estimates shall not be altered by Prime Contractors during the bid process.

Prime Contractors shall propose a Handling and Administration Rate (HAR) only. The Prime Contractor will propose the HAR in the contract solicitation. The Prime Contractor's proposed HAR may not exceed 5 percent of the total FF&E costs, as noted on the bid schedule. The HAR shall not include costs associated with the Interior Design Services required in the Interior Design Services Options.

FF&E items are subject to the Buy American Act.

2.1.2 Procurement and Installation

The Prime Contractor shall coordinate the building completion date with the installation dealer(s) specified in the FF&E Package. The Prime Contractor shall anticipate possible manufacturer price increases if order placement is delayed. It is recommended to order the FF&E product once the planned modification is awarded and funds are received to avoid incurring additional costs. Delayed production and delivery dates can be noted at the time of order placement to coincide with the contract completion date. Any costs incurred due to manufacturer price increases will be the burden of the Prime Contractor.

2.1.3 Use of Blanket Purchase Agreements (BPA) and GSA Schedules

The Prime Contractor will receive a letter of authorization from the Contracting Officer citing the name of the furniture dealer(s) and other information to use when accessing the Federal Government supply sources.

2.1.4 Deposits

The Prime Contractor should anticipate providing a deposit of between 30 percent and 50 percent of the FF&E costs when placing the orders with the manufacturer's dealerships.

The Contractor shall also anticipate possible manufacturer price increases. Recommend ordering FF&E product once funds are received to avoid incurring additional cost. Delayed production and delivery dates can be noted at the time of order placement to coincide with building completion dates. Any cost incurred due to manufacturer price increases will be the burden of the Contractor.

2.1.5 Davis Bacon Wages

Davis Bacon wages do not apply to the FF&E installer from the Government supply sources. The workforce for the FF&E installation and delivery shall be separate and distinct from the labor workforce performing under the construction contract.

2.1.6 Sales Tax

The Prime Contractor shall take maximum advantage of all exemptions from State and Local taxation authorities whether available to it directly or available to the Prime Contractor based on an exemption afforded the Government. The responsibility for paying applicable taxes rests with the Prime Contractor. Any state and local taxes applicable to the FF&E shall be included within the Dealer's quote. Any items purchased as building materials such as carpet are taxable.

2.1.7 Bonds

FF&E items are not considered construction and the prime contractor shall not be required to secure any additional bond for the award of the FF&E line item unless otherwise indicated in the contract. If any additional bond is required for the FF&E line item it is to be included in the prime contractor's HAR.

2.1.8 Unique Item Identification (IUID) and Valuation

Unique item identification and valuation is a system of marking and valuing items delivered to DoD that enhances logistics, contracting, and financial business transactions. The IUID policy is mandatory for all DoD contracts that require the delivery of items. An item is a single article or a single unit formed by a grouping of subassemblies, components, or constituent parts. The Prime Contractor shall provide DoD Unique item identification, valuation and delivery of data for all required FF&E items for which the government's unit acquisition cost is $5,000 or more.

PART 3 EXECUTION

3.1 Installation

The FF&E package includes the installation of all furniture and furnishings as specified in the package. The installation dealer(s) specified in the package shall receive, store as required, transport to the project site, off load, inside deliver, unpack, assemble, place/install, clean, and dispose of all the trash for all furniture and furnishings. It is the Prime Contractor's responsibility to coordinate the building completion, occupancy, and furniture installation dates with the installation dealer(s) specified in the package. Any costs associated with or delaying furniture shipments is the responsibility of the Prime Contractor.

The Prime Contractor shall provide and coordinate all Building Systems (HVAC, Plumbing, Fire Protection, Communications, Electrical, Data,

Architectural, etc. with the furniture plans and furniture installation. All outlets, switches, thermostats, etc. shall be fully accessible. All sprinkler heads, fire extinguishers, ADA, etc., clearances shall be accommodated.

3.2 Installation Warranty

All movable furnishings shall be installed in accordance with the manufacturer's instructions and warranty requirements. All movable furnishings shall be level and aligned. All doors, drawers and accessories shall be level and aligned to open, close and otherwise operate smoothly and securely.

All furniture shall be installed by the furniture manufacturer's dealer of record and not the Prime Contractor. The Government reserves the right to approve/disapprove the Prime Contractor's FF&E installers. In addition, installation dealer(s) must be located within a 100 mile radius of the project site unless approved by the Government Interior Designer or Electrical Engineer. The Prime Contractor shall repair, to the Government's satisfaction, any/all damage to any facility finish that is a result of the furniture installation and correct all punch list items for the furniture / installation.

3.3 Factory Ordering Documentation

After award of the FF&E package, Factory Ordering Documentation, comprised of two CD copies and one binder copy of all ordering documentation, including Factory Order number (FO) and warranty information for all products, shall be provided to the Contracting Officer at the final FF&E walk-thru.

3.4 Post Award Changes

After award of the FF&E turnkey modification, any request to change the FF&E items must be submitted to the Contracting Officer. The turnkey modification will have been accepted, priced, and negotiated as detailed in the final package. Those items will have been agreed to considering color, specific type and quality of material, price, sustainability, life cycle, and dealership service. The Government will require the Prime Contractor to provide exactly those items. Should changes become necessary, careful consideration shall be essential to assure that equivalent quality, price and other aspects of the item are maintained. Otherwise, price adjustments must be negotiated. Coordination with building finishes and other FF&E items is required for all proposed and approved substitutions. The Prime Contractor shall obtain approval from the Contracting Officer and NAVFAC MidLant Interior Designer, for any changes to the FF&E Package.

Post award FF&E manufacturer's price increases, beyond the pricing guarantee date, are the responsibility of the Prime Contractor and shall not be transferred to the Government.

3.5 Punch List

The Contractor, and his Interior Designer shall attend at least two punch list site visits with the installation dealer(s), NAVFAC MidLant Interior Designer, and the Activity Contact. The first site visit shall identify all punch list items (at installation dealer's 98 percent completion) and the second (at 100 percent completion) will confirm that all punch list items have been resolved. Punch List Documentation shall be provided to

NAVFAC within three (3) working days of site visit.

3.6 Best Value Determination

A best value determination has been performed on the final FF&E package. A best value determination is required by FAR 8.404 when placing orders against Federal Supply Schedules for the selection of furniture and furnishings. Best Value is defined in FAR 2.101 as ensuring that the order to be placed under a Federal Supply Schedule results in the lowest overall cost alternative (considering price, special features, administrative costs and client's needs) to meet the government's needs.

-- End of Section --

SECTION 01 32 17.00 20

NETWORK ANALYSIS SCHEDULES (NAS)
09/14

PART 1 GENERAL

1.1 DESCRIPTION

The Contractor is responsible for scheduling procurement, Contractor quality control and construction, acceptance testing and training. Refer to Specification Section 01 33 00 SUBMITTAL PROCEDURES to determine if any items require Government approval prior to construction; If any are required, that submittal review time shall be included in the schedule.

The schedule is a tool to manage the project, both for Contractor and Government activities. It will also be used to report progress and evaluate time extensions. If cost-loaded, it will provide the basis for progress payments.

The Contractor shall use the Critical Path Method (CPM) and the Precedence Diagram Method (PDM) to satisfy time and cost applications. For consistency, when scheduling software terminology is used in this specification, the terms in Primavera's scheduling programs are used.

1.2 SUBMITTALS

Government approval is required for submittals with a "G" designation; submittals not having a "G" designation are for Contractor Quality Control approval. Submit the following in accordance with Section 01 33 00 SUBMITTAL PROCEDURES:

SD-01 Preconstruction Submittals

Qualifications; G

Baseline Network Analysis Schedule (NAS); G

SD-07 Certificates

Monthly Network Analysis Schedule Update; G

SD-11 Closeout Submittals

As-Built Schedule; G

1.3 SCHEDULE ACCEPTANCE PRIOR TO START OF WORK

The Contracting Officer and Contractor shall participate in a preliminary meeting(s) to discuss the proposed schedule and requirements of this section prior to the Contractor preparing the Project Baseline Schedule.

Government review comments on the Contractor's schedule(s) shall not relieve the Contractor from compliance with requirements of the Contract Documents.

Only bonds shall be paid prior to acceptance of the Baseline Network Analysis Schedule (NAS).

The acceptance of a Baseline NAS is a condition precedent to:

a. The Contractor starting work on the demolition or construction stage(s) of the contract.

b. Processing Contractor's pay request(s) for construction activities/items of work.

c. Review of any schedule updates.

Submittal of the Baseline Network Analysis Schedule, and subsequent schedule updates, shall be understood to be the Contractor's certification that the submitted schedule meets all of the requirements of the Contract Documents, represents the Contractor's plan on how the work shall be accomplished, and accurately reflects the work that has been accomplished and how it was sequenced (as-built logic).

1.4 SOFTWARE

Project schedules must be prepared and maintained using Primavera P6 or current mandated scheduling program. Save files in Concentric P6 or current mandated scheduling program file format, compatible with the Governments version of the scheduling program. Importing data into P6/current mandated scheduling program using data conversion techniques or third party software will be cause for rejection of the submitted schedule.

1.5 QUALIFICATIONS

The designated Scheduler for the project shall have prepared and maintained at least 3 previous schedules of similar size and complexity of this contract using SureTrak/P3 or current mandated scheduling program. A resume outlining the qualifications of the Scheduler shall be submitted for acceptance to the Contracting Officer. Payment will not be processed until an acceptable Scheduler is provided.

1.6 NETWORK SYSTEM FORMAT

The system shall include time scaled logic diagrams and specified reports.

1.6.1 Diagrams

Provide Time-scaled Logic Diagram printed in color on ANSI D size sheets. The diagram shall clearly show activities on the critical path. Critical path items must be red in color. Include the following information for each activity:

a. Activity ID

b. Activity Description

c. Original Duration in Work Days

d. Remaining duration

e. Percent Complete

f. Early Start Date

g. Early Finish Date

h. Total Float

1.6.2 Schedule Activity Properties and Level of Detail

The NAS shall identify all Government, Construction Quality Management (CQM), Construction activities planned for the project and all other activities that could impact project completion if delayed. Separate activities shall be created for each Phase, Area, Floor Level and Location the activity is occurring. Activity categories included in the schedule are specified below.

With the exception of the Contract Award and Contract Completion Date (CCD) milestone activities, no activity shall be open-ended; each activity shall have predecessor and successor ties. Once an activity exists on the schedule it may not be deleted or renamed to change the scope of the activity and shall not be removed from the schedule logic without approval from the Contracting Officer. The ID number for a deleted activity shall not be re-used for another activity. No more than 20 percent of the activities shall be critical or near critical. Critical is defined as having zero days of Total Float. "Near Critical" is defined as having Total Float of 1 to 14 days. Contractor activities shall be driven by calendars that reflect Saturdays, Sundays and all Federal Holidays as non-work days.

1.6.2.1 Activity Categories

a. Procurement Activities: Examples of procurement activities include, but are not limited to; Material/equipment submittal preparation, submittal and approval of material/equipment; material/equipment fabrication and delivery, and material/equipment on-site. As a minimum, separate procurement activities will be provided for critical items, long lead items, items requiring government approval and material/equipment procurement for which payment will be requested in advance of installation. The Contractor shall show each delivery with relationship tie to the Construction Activity specifically for the delivery.

b. Government Activities: Government and other agency activities that could impact progress shall be clearly identified. Government activities include, but are not limited to; Government approved submittal reviews, Government conducted inspections/tests, environmental permit approvals by State regulators, utility outages, Design Start, Construction Start, (including Design/Construction Start for each Fast-Track Phase, and delivery of Government Furnished Material/Equipment.

c. Construction Quality Management (CQM) Activities: CQM Activities shall identify the Preparatory Phase and Initial Phase for each Definable Feature of Work identified in the Contractor's Quality Control Plan. These activities shall be added to each Three-Week Look Ahead Schedule referenced in the paragraph entitled "THREE-WEEK LOOK AHEAD SCHEDULE" and will also be included in each monthly update. The Follow-up Phase will be represented by the Construction Activities in the Baseline Schedule and in the schedule updates.

d. Construction Activities: No on-site construction activity shall have a duration in excess of 20 working days. Separate construction activities shall be created for each Phase, Area, Floor Level and Location the

activity is occurring. Contractor activities will be driven by calendars that reflect Saturdays, Sundays and all Federal Holidays as non-work days, unless otherwise defined in this contract.

e. Turnover and Closeout Activities: Include a separate section with all items on the Facility Turnover Checklist that are applicable to this project. The checklist will be provided at the Preconstruction Meeting. As a minimum, this will include all testing, specialized inspection activities, Pre-Final inspection, Punch List Completion, Final Inspection and Acceptance. Add a milestone for the Facility Turnover Planning Meeting at approximately 75 percent construction contract completion or three to six months prior to BOD, whichever is sooner.

1.6.2.2 Contract Milestones and Constraints

a. Project Start Date Milestones: The Contractor shall include as the first activity on the schedule a start milestone titled "Contract Award", which shall have a Mandatory Start constraint equal to the Contract Award Date.

b. Projected Completion Milestone: The Contractor shall include an unconstrained finish milestone on the schedule titled "Projected Completion". Projected Completion is defined as the point in time the Government would consider the project complete and ready for its intended use. This milestone shall have the Contract Completion (CCD) milestone as its only successor.

c. Contract Completion Date (CCD) Milestone: The Contractor shall include as the last activity on the schedule a finish milestone titled "Contract Completion (CCD)", which shall have a Mandatory Finish constraint equal to the current Contract Completion Date. Calculation of schedule updates shall be such that if the finish of the "Projected Completion" milestone falls after the contract completion date, then negative float will be calculated on the longest path and if the finish of the "Projected Completion" milestone falls before the contract completion date, the float calculation shall reflect positive float on the longest path. The only predecessor to the Contract Completion Date Milestone shall be the Projected Completion milestone.

1.6.2.3 Activity Code

At a minimum, the Contractor shall establish activity codes identified in this specification and 3 additional activity codes identified by the Contracting Officer. Once established, activity codes and values cannot be changed without approval by the Contracting Officer.

a. Phase: All activities shall be assigned a 4-digit code value based on the contract phase it occurs in.

b. Area Code: All activities shall be assigned an area code value identifying the Area in which the activity occurs. Activities shall not belong to more than one area. Area is defined as a distinct space, function or activity category; such as, separate structure(s), sitework, project summary, construction quality management, material/equipment procurement, etc.

c. Work Item: All activities in the project schedule shall be assigned a 4-digit Work Item code value. Examples of Work Item code values

include but are not limited to water lines, drain lines, building pad and foundation, slab on grade, walls and columns, suspended slab, roof structure, roofing, exterior finish systems, interior rough-in, and finishes, etc.

d. Location 1: Assign a 4-digit Location 1 code value to activities associated with multistory structures. Code values are used to identify the floor level where an activity is occurring.

e. Location 2: Assign a 4-digit Location 2 code value to all activities to identify the location within an Area, Work Item or Building Level that an activity is occurring.

f. Responsibility Code: All activities in the project schedule shall be identified with the party responsible for completing the task. Activities shall not belong to more than one responsible party.

1.6.2.4 Anticipated Weather Delays

The Contractor shall use the National Oceanic and Atmospheric Administration's (NOAA) historical monthly averages for the NOAA location closest to the project site as the basis for establishing a "Weather Calendar" showing the number of anticipated non-workdays for each month due to adverse weather, Saturdays, Sundays and all Federal Holidays as non-work days.

Assign the Weather Calendar to any activity that could be impacted by adverse weather. The Contracting Officer will issue a modification in accordance with the contract clauses, giving the Contractor a time extension for the difference of days between the anticipated and actual adverse weather delay if the number of actual adverse weather delay days exceeds the number of days anticipated for the month in which the delay occurs and the adverse weather delayed activities critical to contract completion. A lost workday due to weather conditions is defined as a day in which the Contractor cannot work at least 50 percent of the day on the impacted activity.

1.6.2.5 Cost Loading

a. Cost Loading Activities: Material and Equipment Costs for which payment will be requested in advance of installation shall be assigned to their respective procurement activity (i.e., the material/equipment on-site activity). All other construction costs shall be assigned to their respective Construction Activities. The value of inspection/testing activities will not be less than 10 percent of the total costs for Procurement and Construction Activities. Evenly disperse overhead and profit to each activity over the duration of the project.

b. Quantities and Units of Measure: Each cost loaded activity shall have a detailed quantity breakdown and unit of measure.

1.6.3 Schedule Software Settings and Restrictions

a. Activity Constraints: Date/time constraint(s), other than those required by the contract, will not be allowed unless accepted by the Contracting Officer. Identify any constraints proposed and provide an explanation for the purpose of the constraint in the Narrative Report.

b. Default Progress Data Disallowed: Actual Start and Actual Finish dates on the CPM schedule shall match the dates on the Contractor Quality Control and Production Reports.

c. Software Settings: Schedule calculations and Out-of-Sequence progress (if applicable) shall be handled through Retained Logic, not Progress Override. All activity durations and float values will be shown in days. Activity progress will be shown using Remaining Duration. Default activity type will be set to "Task". The project "Must Finish By" date shall be left blank.

1.6.4 Required Tabular Reports

The following reports shall be included with the schedule submittal:

a. Log Report: Listing of all changes made between the previous schedule and current updated schedule.

b. Narrative Report: Identify and justify; 1) Progress made in each area of the project; 2) Critical Path; 3) Date/time constraint(s), other than those required by the contract 3) Changes in the following; added or deleted activities, original and remaining durations for activities that have not started, logic, milestones, planned sequence of operations, critical path, and cost loading; 4) Any decrease in previously reported activity Earned Amount; 5) Pending items and status thereof, including permits, changes orders, and time extensions; 6) Status of Contract Completion Date and interim milestones; 7) Current and anticipated delays (describe cause of delay and corrective actions(s)); and 8) Description of current and future schedule problem areas. Each entry in the narrative report will cite the respective Activity ID and Activity Description, the date and reason for the change, and description of the change.

c. Earned Value Report: Listing all activities having a budget amount cost loaded. Compilation of total earnings on the project from notice to proceed to current progress payment request. Group and sort activities as directed by the Contracting Officer. Show current budget, previous physical percent complete, to-date physical percent complete, previous earned value, to-date earned value and cost to complete on the report for each activity:

d. Schedule Variance Control (SVC) Diagram: With each schedule submission, provide a SVC diagram showing 1) Cash Flow S-Curves indicating planned project cost based on projected early and late activity finish dates and 2) Earned Value to-date. Revise Cash Flow S-Curves when the contract is modified, or as directed by the Contracting Officer.

1.7 SUBMISSION AND ACCEPTANCE

1.7.1 Monthly Network Analysis Updates

Contractor and Government representatives shall meet at monthly intervals to review and agree on the information presented in the updated project schedule. The submission of an acceptable, updated schedule to the Government is a condition precedent to the processing of the Contractor's pay request. If a Schedule of Prices is the basis for progress payments, it shall be consistent with the logic and activity breakdowns on the progress schedule. If progress payments are based on a cost-loaded

schedule, the Contractor and Government shall agree on percentage of payment for each activity progressed during the update period.

Provide the following with each Schedule submittal:

a. Time Scaled Logic Diagram.

b. Reports listed in paragraph entitled "Required Tabular Reports."

c. Data disks containing the project schedule. Include the back-up native .prx/current mandated schedule program files.

1.7.2 As-Built Schedule

As a condition precedent to the release of retention and making final payment, submit an "As-Built Schedule," as the last schedule update showing all activities at 100 percent completion. This schedule shall reflect the exact manner in which the project was actually constructed.

1.8 CONTRACT MODIFICATION

Submit a Time Impact Analysis with each cost and time proposal for a proposed change. Time Impact Analysis (TIA) shall illustrate the influence of each change or delay on the Contract Completion Date or milestones. No time extensions will be granted nor delay damages paid unless a delay occurs which consumes all available Project Float, and extends the Projected Finish beyond the Contract Completion Date.

a. Each TIA shall be in both narrative and schedule form demonstrating the delay impact. The TIA shall identify the predecessors to the new activities and demonstrate the impacts to successor activities. The Contractor shall run the schedule calculations and submit the impacted schedule with the proposal or claim.

b. The TIA schedule submitted with the proposal shall show all activity progress as of the date of the proposal. If the impact to the schedule occurs prior to the proposal submission, the TIA schedule shall be updated to show all activity progress as of the time of the impact. If the proposed change does not impact the CCD, no TIA shall be required.

c. Submit Data disks containing the TIA schedule. Include the back-up native .prx/current mandated schedule program files.

d. Unless the Contracting Officer requests otherwise, only conformed contract modifications shall be added into the Project NAS.

1.9 PROJECT FLOAT

Project Float is the length of time between the Contractor's Projected Finish Milestone and the Contract Completion Date Milestone. Project Float available in the schedule, at any time shall not be for the exclusive use of either the Government or the Contractor.

1.10 THREE-WEEK LOOK AHEAD SCHEDULE

The Contractor shall prepare and issue a 3-Week Look Ahead schedule to provide a more detailed day-to-day plan of upcoming work identified on the Project Network Analysis Schedule. The work plans shall be keyed to NAS activity numbers and updated each week to show the planned work for the

current and following two-week period. Additionally, include upcoming outages, closures, preparatory meetings, and initial meetings. Identify critical path activities on the Three-Week Look Ahead Schedule. The detail work plans are to be bar chart type schedules, maintained separately from the Project NAS on an electronic spreadsheet program and printed on 8 ½ by 11 sheets as directed by the Contracting Officer. Activities shall not exceed 5 working days in duration and have sufficient level of detail to assign crews, tools and equipment required to complete the work. Three hard copies and one electronic file of the 3-Week Look Ahead Schedule shall be delivered to the Contracting Officer no later than 8 a.m. each Monday and reviewed during the weekly CQC Coordination Meeting.

PART 2 PRODUCTS

Not used.

PART 3 EXECUTION

Not used.

-- End of Section --

SECTION 01 33 00

SUBMITTAL PROCEDURES
06/14

PART 1 GENERAL

1.1 DEFINITIONS

1.1.1 Submittal Descriptions (SD)

Submittals requirements are specified in the technical sections. Submittals are identified by Submittal Description (SD) numbers and titles as follows:

SD-01 Preconstruction Submittals

Submittals which are required prior to commencing work on site.

Certificates of insurance

Surety bonds

List of proposed Subcontractors

List of proposed products

Construction Progress Schedule

Network Analysis Schedule (NAS)

Submittal register

Schedule of prices

Health and safety plan

Work plan

Quality control(QC) plan

Environmental protection plan

SD-02 Shop Drawings

Drawings, diagrams and schedules specifically prepared to illustrate some portion of the work.

Diagrams and instructions from a manufacturer or fabricator for use in producing the product and as aids to the Contractor for integrating the product or system into the project.

Drawings prepared by or for the Contractor to show how multiple systems and interdisciplinary work will be coordinated.

SD-03 Product Data

Catalog cuts, illustrations, schedules, diagrams, performance charts,

instructions and brochures illustrating size, physical appearance and other characteristics of materials, systems or equipment for some portion of the work.

Samples of warranty language when the contract requires extended product warranties.

SD-04 Samples

Fabricated or unfabricated physical examples of materials, equipment or workmanship that illustrate functional and aesthetic characteristics of a material or product and establish standards by which the work can be judged.

Color samples from the manufacturer's standard line (or custom color samples if specified) to be used in selecting or approving colors for the project.

Field samples and mock-ups constructed on the project site establish standards by which the ensuring work can be judged. Includes assemblies or portions of assemblies which are to be incorporated into the project and those which will be removed at conclusion of the work.

SD-05 Design Data

Design calculations, mix designs, analyses or other data pertaining to a part of work.

SD-06 Test Reports

Report signed by authorized official of testing laboratory that a material, product or system identical to the material, product or system to be provided has been tested in accord with specified requirements. (Testing must have been within three years of date of contract award for the project.)

Report which includes findings of a test required to be performed by the Contractor on an actual portion of the work or prototype prepared for the project before shipment to job site.

Report which includes finding of a test made at the job site or on sample taken from the job site, on portion of work during or after installation.

Investigation reports.

Daily logs and checklists.

Final acceptance test and operational test procedure.

SD-07 Certificates

Statements printed on the manufacturer's letterhead and signed by responsible officials of manufacturer of product, system or material attesting that product, system or material meets specification requirements. Must be dated after award of project contract and clearly name the project.

Document required of Contractor, or of a manufacturer, supplier,

installer or Subcontractor through Contractor, the purpose of which is to further quality of orderly progression of a portion of the work by documenting procedures, acceptability of methods or personnel qualifications.

Confined space entry permits.

Text of posted operating instructions.

SD-08 Manufacturer's Instructions

Preprinted material describing installation of a product, system or material, including special notices and (MSDS)concerning impedances, hazards and safety precautions.

SD-09 Manufacturer's Field Reports

Documentation of the testing and verification actions taken by manufacturer's representative at the job site, in the vicinity of the job site, or on a sample taken from the job site, on a portion of the work, during or after installation, to confirm compliance with manufacturer's standards or instructions. The documentation must be signed by an authorized official of a testing laboratory or agency and must state the test results; and indicate whether the material, product, or system has passed or failed the test.

Factory test reports.

SD-10 Operation and Maintenance Data

Data that is furnished by the manufacturer, or the system provider, to the equipment operating and maintenance personnel, including manufacturer's help and product line documentation necessary to maintain and install equipment. This data is needed by operating and maintenance personnel for the safe and efficient operation, maintenance and repair of the item.

This data is intended to be incorporated in an operations and maintenance manual or control system.

SD-11 Closeout Submittals

Documentation to record compliance with technical or administrative requirements or to establish an administrative mechanism.

Special requirements necessary to properly close out a construction contract. For example, Record Drawings and as-built drawings. Also, submittal requirements necessary to properly close out a major phase of construction on a multi-phase contract.

Interim "DD Form 1354" with cost breakout for all assets 30 days prior to facility turnover.

1.1.2 Approving Authority

Office or designated person authorized to approve submittal.

1.1.3 Work

As used in this section, on- and off-site construction required by contract documents, including labor necessary to produce submittals, construction, materials, products, equipment, and systems incorporated or to be incorporated in such construction.

1.2 SUBMITTALS

Government approval is required for submittals with a "G" designation; submittals not having a "G" designation are for Contractor QC approval. Submit the following in accordance with this section.

SD-01 Preconstruction Submittals

Submittal register; G

1.3 SUBMITTAL CLASSIFICATION

Submittals are classified as follows:

1.3.1 Government Approved G

Government approval is required for extensions of design, critical materials, deviations, equipment whose compatibility with the entire system must be checked, and other items as designated by the Contracting Officer. Within the terms of the Contract Clause entitled, "Specifications and Drawings for Construction," they are considered to be "shop drawings."

On submittals indicated as G, ID, these submittals shall to be reviewed and approved by NAVFAC MidLant Interior Design.

On submittals indicated as G, EE, these submittals shall to be reviewed and approved by NAVFAC MidLant MC-IPT Electrical Engineer.

1.3.1.1 Information Only

Submittals not requiring Government approval will be for information only. They are not considered to be "shop drawings" within the terms of the Contract Clause referred to above.

1.4 FORWARDING SUBMITTALS REQUIRING GOVERNMENT APPROVAL

1.4.1 Submittals Required from the Contractor

As soon as practicable after award of contract, and before procurement of fabrication, forward to Scott Littlefield, Code OPQC15, Marine Corps IPT, 9742 Maryland Avenue, Norfolk, Virginia, 23511-3095 submittals required in the technical sections of this specification, including shop drawings, product data and samples. One copy of the transmittal form for all submittals shall be forwarded to the Resident Officer in Charge of Construction (ROICC).

Marine Corps IPT will review and approve for the Contracting Officer those submittals reserved for Contracting Officer approval to verify submittals comply with the contract requirements.

a. Section 27 10 00 BUILDING TELECOMMUNICATIONS CABLING SYSTEM: All submittals. Provide an information copy of all submittals to Base

Telephone through the Contracting Officer. Base Telephone will coordinate their review and approval through the Marine Corps IPT.

b. Section 33 82 00 TELECOMMUNICATIONS OUTSIDE PLANT (OSP): All submittals. Provide an information copy of all submittals to Base Telephone through the Contracting Officer. Base Telephone will coordinate their review and approval through the Marine Corps IPT.

1.4.1.1 O&M Data

Marine Corps IPT will review and approve for the Contracting Officer O&M Data to verify the submittals comply with the contract requirements; submit data specified for a given item within 30 calendar days after the item is delivered to the contract site.

a. In the event the Contractor fails to deliver O&M Data within the time limits specified, the Contracting Officer may withhold from progress payments 50 percent of the price of the item with which such O&M Data are applicable.

1.4.1.2 Submittals Not Requiring Government Approval Or Surveillance

Construction submittals not requiring Government approval or surveillance shall be submitted for information.

1.5 PREPARATION

1.5.1 Transmittal Form

Transmit each submittal, except sample installations and sample panels to office of approving authority. Transmit submittals with transmittal form prescribed by Contracting Officer and standard for project. On the transmittal form identify Contractor, indicate date of submittal, and include information prescribed by transmittal form and required in paragraph entitled, "Identifying Submittals," of this section. Process transmittal forms to record actions regarding sample installations or panels.

1.5.2 Identifying Submittals

When submittals are provided by a subcontractor, the Prime Contractor is to prepare, review and stamp with Contractor's approval all specified submittals prior to submitting for Government approval.

Identify submittals, except sample installations and sample panels, with the following information permanently adhered to or noted on each separate component of each submittal and noted on transmittal form. Mark each copy of each submittal identically, with the following:

a. Project title and location.

b. Construction contract number.

c. Date of the drawings and revisions.

d. Name, address, and telephone number of subcontractor, supplier, manufacturer and any other subcontractor associated with the submittal.

e. Section number of the specification section by which submittal is required.

f. Submittal description (SD) number of each component of submittal.

g. When a resubmission, add alphabetic suffix on submittal description, for example, submittal 18 would become 18A, to indicate resubmission.

h. Product identification and location in project.

1.5.3 Electronic Submittals

Construction Submittals for this project shall be made electronically utilizing software provided by the Contractor and approved by the Government and the DOR. Electronic Working and Record Drawings shall be submitted in accordance with specification section 01 78 00 CLOSEOUT SUBMITTALS. Provide eOMSI submittals in accordance with specification section 01 78 24.00 20 FACILITY ELECTRONIC OPERATION AND MAINTENANCE SUPPORT INFORMATION (eOMSI).

1.5.3.1 Identification and Information

Identify and incorporate information in each electronic submittal file as follows:

a. Assemble complete submittal package into a single indexed electronic file incorporating submittal requirements of a single Specification Section and transmittal form with links enabling navigation to each item.

b. Name file with the project identifier and Specification Section number, and submittal number, including revision identifier if required as follows:

   File name shall use project P-number followed by a dash, the six or ten digit Specification Section number followed by a dash, and then a sequential number (e.g., P601-04 20 00-001 or P601-07 21 00.00 20-001). Resubmittals shall include an alphabetic suffix after the sequential number (e.g., P601-04 20 00-001A or P601-07 21 00.00 20-001A).

1.5.3.2 General Electronic Submittal Procedure Requests

Post electronic submittals as PDF electronic files directly to Contractor's project electronic site specifically established for the Project.

a. DOR will post electronic annotated files.

b. Contractor shall annotate and retain one copy of file as an electronic Project record document file.

c. Contractor shall maintain three (3) hard copies of all submittals: one copy to be maintained in the field during construction, one for the Construction Management Engineer (CME) office, and one for the contract files.

d. Contractor shall provide upon completion of the project, CDs which have all reviewed and marked up submittals for the project.

1.5.4 Format for SD-02 Shop Drawings

a. Shop drawings are not to be less than 8 1/2 by 11 inches nor more than 30 by 42 inches, except for full size patterns or templates. Prepare drawings to accurate size, with scale indicated, unless other form is required. Drawings are to be suitable for reproduction and be of a quality to produce clear, distinct lines and letters with dark lines on a white background.

b. Present 8 1/2 by 11 inches sized shop drawings as part of the bound volume for submittals required by section. Present larger drawings in sets.

c. Include on each drawing the drawing title, number, date, and revision numbers and dates, in addition to information required in paragraph entitled "Identifying Submittals."

d. Number drawings in a logical sequence. Contractors may use their own number system. Each drawing is to bear the number of the submittal in a uniform location adjacent to the title block. Place the Government contract number in the margin, immediately below the title block, for each drawing.

e. Reserve a blank space, no smaller than 4 inches square on the right hand side of each sheet for the Government disposition stamp.

f. Dimension drawings, except diagrams and schematic drawings; prepare drawings demonstrating interface with other trades to scale. Use the same unit of measure for shop drawings as indicated on the contract drawings. Identify materials and products for work shown.

g. Include the nameplate data, size and capacity on drawings. Also include applicable federal, military, industry and technical society publication references.

1.5.5 Format of SD-03 Product Data and SD-08 Manufacturer's Instructions

a. Present product data submittals for each section as a complete, bound volume. Include table of contents, listing page and catalog item numbers for product data.

b. Indicate, by prominent notation, each product which is being submitted; indicate specification section number and paragraph number to which it pertains.

c. Supplement product data with material prepared for project to satisfy submittal requirements for which product data does not exist. Identify this material as developed specifically for project, with information and format as required for submission of SD-07 Certificates.

e. Include the manufacturer's name, trade name, place of manufacture, and catalog model or number on product data. Also include applicable federal, military, industry and technical society publication references. Should manufacturer's data require supplemental information for clarification, submit as specified for SD-07 Certificates.

f. Where equipment or materials are specified to conform to industry and technical society reference standards of the organizations such as

American National Standards Institute (ANSI), ASTM International (ASTM), National Electrical Manufacturer's Association (NEMA), Underwriters Laboratories (UL), and Association of Edison Illuminating Companies (AEIC), submit proof of such compliance. The label or listing by the specified organization will be acceptable evidence of compliance. In lieu of the label or listing, submit a certificate from an independent testing organization, competent to perform testing, and approved by the Contracting Officer. State on the certificate that the item has been tested in accordance with the specified organization's test methods and that the item complies with the specified organization's reference standard.

g. Collect required data submittals for each specific material, product, unit of work, or system into a single submittal and marked for choices, options, and portions applicable to the submittal. Mark each copy of the product data identically. Partial submittals will not be accepted for expedition of construction effort.

h. Submit manufacturer's instructions prior to installation.

1.5.6 Format of SD-04 Samples

a. Furnish samples in sizes below, unless otherwise specified or unless the manufacturer has prepackaged samples of approximately same size as specified:

(1) Sample of Equipment or Device: Full size.

(2) Sample of Materials Less Than 2 by 3 inches: Built up to 8 1/2 by 11 inches.

(3) Sample of Materials Exceeding 8 1/2 by 11 inches: Cut down to 8 1/2 by 11 inches and adequate to indicate color, texture, and material variations.

(4) Sample of Linear Devices or Materials: 10 inch length or length to be supplied, if less than 10 inches. Examples of linear devices or materials are conduit and handrails.

(5) Sample of Non-Solid Materials: Pint. Examples of non-solid materials are sand and paint.

(6) Color Selection Samples: 2 by 4 inches. Where samples are specified for selection of color, finish, pattern, or texture, submit the full set of available choices for the material or product specified. Sizes and quantities of samples are to represent their respective standard unit.

(7) Sample Panel: 4 by 4 feet.

(8) Sample Installation: 100 square feet.

b. Samples Showing Range of Variation: Where variations in color, finish, pattern, or texture are unavoidable due to nature of the materials, submit sets of samples of not less than three units showing extremes and middle of range. Mark each unit to describe its relation to the range of the variation.

c. Reusable Samples: Incorporate returned samples into work only if so

specified or indicated. Incorporated samples are to be in undamaged condition at time of use.

d. Recording of Sample Installation: Note and preserve the notation of area constituting sample installation but remove notation at final clean up of project.

e. When color, texture or pattern is specified by naming a particular manufacturer and style, include one sample of that manufacturer and style, for comparison.

1.5.7 Format of SD-05 Design Data and SD-07 Certificates

Provide design data and certificates on 8 1/2 by 11 inches paper. Provide a bound volume for submittals containing numerous pages.

1.5.8 Format of SD-06 Test Reports and SD-09 Manufacturer's Field Reports

a. Provide reports on 8 1/2 by 11 inches paper in a complete bound volume.

b. Indicate by prominent notation, each report in the submittal. Indicate specification number and paragraph number to which it pertains.

1.5.9 Format of SD-10 Operation and Maintenance Data (O&M)

Comply with the requirements specified in Section 01 78 23 OPERATION AND MAINTENANCE DATA and 01 78 24.00 20 FACILITY ELECTRONIC OPERATION AND MAINTENANCE SUPPORT INFORMATION (eOMSI)for O&M Data format.

1.5.10 Format of SD-01 Preconstruction Submittals and SD-11 Closeout Submittals

When submittal includes a document which is to be used in project or become part of project record, other than as a submittal, do not apply Contractor's approval stamp to document, but to a separate sheet accompanying document.

1.6 QUANTITY OF SUBMITTALS

1.6.1 Number of Copies of SD-02 Shop Drawings

Submit six copies of submittals of shop drawings requiring review and approval only by QC organization and seven copies of shop drawings requiring review and approval by Contracting Officer.

1.6.2 Number of Copies of SD-03 Product Data and SD-08 Manufacturer's Instructions

Submit in compliance with quantity requirements specified for shop drawings.

1.6.3 Number of Samples SD-04 Samples

a. Submit two samples, or two sets of samples showing range of variation, of each required item. One approved sample or set of samples will be retained by approving authority and one will be returned to Contractor.

b. Submit one sample panel or provide one sample installation where directed. Include components listed in technical section or as directed.

c. Submit one sample installation, where directed.

d. Submit one sample of non-solid materials.

1.6.4 Number of Copies SD-05 Design Data and SD-07 Certificates

Submit in compliance with quantity requirements specified for shop drawings.

1.6.5 Number of Copies SD-06 Test Reports and SD-09 Manufacturer's Field Reports

Submit in compliance with quantity and quality requirements specified for shop drawings other than field test results that will be submitted with QC reports.

1.6.6 Number of Copies of SD-10 Operation and Maintenance Data

Submit Five copies of O&M Data to the Contracting Officer for review and approval.

1.6.7 Number of Copies of SD-01 Preconstruction Submittals and SD-11 Closeout Submittals

Unless otherwise specified, submit two sets of administrative submittals.

1.6.8 Quantity of Submittals for Information

Submit two copies of submittals for information to the Contracting Officer.

1.7 INFORMATION ONLY SUBMITTALS

Normally submittals for information only will not be returned. Approval of the Contracting Officer is not required on information only submittals. The Government reserves the right to require the Contractor to resubmit any item found not to comply with the contract. This does not relieve the Contractor from the obligation to furnish material conforming to the plans and specifications; will not prevent the Contracting Officer from requiring removal and replacement of nonconforming material incorporated in the work; and does not relieve the Contractor of the requirement to furnish samples for testing by the Government laboratory or for check testing by the Government in those instances where the technical specifications so prescribe.

1.8 VARIATIONS

Variations from contract requirements require both Designer of Record (DOR) and Government approval pursuant to contract Clause FAR 52.236-21 and will be considered where advantageous to Government.

1.8.1 Considering Variations

Discussion with Contracting Officer prior to submission, after consulting with the DOR, will help ensure functional and quality requirements are met and minimize rejections and re-submittals. When contemplating a variation which results in lower cost, consider submission of the variation as a Value Engineering Change Proposal (VECP).

Specifically point out variations from contract requirements in transmittal

letters. Failure to point out deviations may result in the Government requiring rejection and removal of such work at no additional cost to the Government.

1.8.2 Proposing Variations

When proposing variation, deliver written request to the Contracting Officer, with documentation of the nature and features of the variation and why the variation is desirable and beneficial to Government, including the DOR's written analysis and approval. If lower cost is a benefit, also include an estimate of the cost savings. In addition to documentation required for variation, include the submittals required for the item. Clearly mark the proposed variation in all documentation.

1.8.3 Warranting That Variations Are Compatible

When delivering a variation for approval, Contractor, including its Designer(s) of Record, warrants that this contract has been reviewed to establish that the variation, if incorporated, will be compatible with other elements of work.

1.8.4 Review Schedule Is Modified

In addition to normal submittal review period, a period of 10 working days will be allowed for consideration by the Government of submittals with variations.

1.9 SUBMITTAL REGISTER

Prepare and maintain submittal register, as the work progresses. Do not change data which is output in columns (c), (d), (e), and (f) as delivered by Government; retain data which is output in columns (a), (g), (h), and (i) as approved. A submittal register showing items of equipment and materials for which submittals are required by the specifications is provided as an attachment. This list may not be all inclusive and additional submittals may be required. The Government will provide the initial submittal register with the following fields completed, to the extent that will be required by the Government during subsequent usage. The Government provided submittal register will be in the form of a pdf file.

Column (c): Lists specification section in which submittal is required.

Column (d): Lists each submittal description (SD No. and type, e.g. SD-02 Shop Drawings) required in each specification section.

Column (e): Lists one principal paragraph in specification section where a material or product is specified. This listing is only to facilitate locating submitted requirements. Do not consider entries in column (e) as limiting project requirements.

Column (f): Indicate approving authority for each submittal.

Thereafter, the Contractor is to track all submittals by maintaining a complete list, including completion of all data columns, including dates on which submittals are received and returned by the Government.

1.9.1 Use of Submittal Register

Submit submittal register. Submit with QC plan and project schedule. Verify that all submittals required for project are listed and add missing submittals. Coordinate and complete the following fields on the register submitted with the QC plan and the project schedule:

Column (a) Activity Number: Activity number from the project schedule.

Column (g) Contractor Submit Date: Scheduled date for approving authority to receive submittals.

Column (h) Contractor Approval Date: Date Contractor needs approval of submittal.

Column (i) Contractor Material: Date that Contractor needs material delivered to Contractor control.

1.9.2 Contractor Use of Submittal Register

Update the following fields with each submittal throughout contract.

Column (b) Transmittal Number: Contractor assigned list of consecutive numbers.

Column (j) Action Code (k): Date of action used to record Contractor's review when forwarding submittals to QC.

Column (l) List date of submittal transmission.

Column (q) List date approval received.

1.9.3 Approving Authority Use of Submittal Register

Update the following fields.

Column (b) Transmittal Number: Contractor assigned list of consecutive numbers.

Column (l) List date of submittal receipt.

Column (m) through (p)List Date related to review actions.

Column (q) List date returned to Contractor.

1.9.4 Action Codes

Entries for columns (j) and (o), are to be used are as follows (others may be prescribed by Transmittal Form):

1.9.4.1 Government Review Action Codes

"A" - "Approved as submitted"; "Completed"

"B" - "Approved, except as noted on drawings"; "Completed"

"C" - "Approved, resubmission required"; "Resubmit"

"D" - "Returned by correspondence"; "Completed"

"E" - "Disapproved (See attached)"; "Resubmit"

"F" - "Receipt acknowledged"; "Completed"

"G" - "Other (Specify)"; "Resubmit"

"X" - "Receipt acknowledged, does not comply"; "Resubmit"

1.9.4.2 Contractor Action Codes

NR - Not Received

AN - Approved as noted

A - Approved

RR - Disapproved, Revise, and Resubmit

1.9.5 Copies Delivered to the Government

Deliver one copy of submittal register updated by Contractor to Government with each invoice request.

1.10 SCHEDULING

Schedule and submit concurrently submittals covering component items forming a system or items that are interrelated. Include certifications to be submitted with the pertinent drawings at the same time. No delay damages or time extensions will be allowed for time lost in late submittals. An additional 14 calendar days will be allowed and shown on the register for review and approval of submittals for HVAC control systems.

a. Coordinate scheduling, sequencing, preparing and processing of submittals with performance of work so that work will not be delayed by submittal processing. Allow for potential resubmittal of requirements.

b. Submittals called for by the contract documents will be listed on the register. If a submittal is called for but does not pertain to the contract work, the Contractor is to include the submittal in the register and annotate it "N/A" with a brief explanation. Approval by the Contracting Officer does not relieve the Contractor of supplying submittals required by the contract documents but which have been omitted from the register or marked "N/A."

c. Re-submit register and annotate monthly by the Contractor with actual submission and approval dates. When all items on the register have been fully approved, no further re-submittal is required.

d. Carefully control procurement operations to ensure that each individual submittal is made on or before the Contractor scheduled submittal date shown on the approved "Submittal Register."

e. Except as specified otherwise, allow review period, beginning with receipt by approving authority, that includes at least 15 working days for submittals for QC Manager approval and 20 working days for submittals for Contracting Officer approval. Period of review for submittals with Contracting Officer approval begins when Government

receives submittal from QC organization.

f. For submittals requiring review by fire protection engineer, allow review period, beginning when Government receives submittal from QC organization, of 30 working days for return of submittal to the Contractor.

g. Period of review for each resubmittal is the same as for initial submittal.

1.10.1 Reviewing, Certifying, Approving Authority

The QC organization is responsible for reviewing and certifying that submittals are in compliance with contract requirements. Approving authority on submittals is QC Manager unless otherwise specified for specific submittal. At each "Submittal" paragraph in individual specification sections, a notation "G," following a submittal item, indicates Contracting Officer is approving authority for that submittal item.

1.10.2 Constraints

a. Conform to provisions of this section, unless explicitly stated otherwise for submittals listed or specified in this contract.

b. Submit complete submittals for each definable feature of work. Submit at the same time components of definable feature interrelated as a system.

c. When acceptability of a submittal is dependent on conditions, items, or materials included in separate subsequent submittals, submittal will be returned without review.

d. Approval of a separate material, product, or component does not imply approval of assembly in which item functions.

1.10.3 QC Organization Responsibilities

a. Note date on which submittal was received from Contractor on each submittal.

b. Review each submittal; and check and coordinate each submittal with requirements of work and contract documents.

c. Review submittals for conformance with project design concepts and compliance with contract documents.

d. Act on submittals, determining appropriate action based on QC organization's review of submittal.

(1) When QC Manager is approving authority, take appropriate action on submittal from the possible actions defined in paragraph entitled, "Approved/Accepted Submittals," of the section."

(2) When Contracting Officer is approving authority or when variation has been proposed, forward submittal to Government with certifying statement or return submittal marked "not reviewed" or "revise and resubmit" as appropriate. The QC organization's review of submittal determines appropriate action.

e. Ensure that material is clearly legible.

f. Stamp each sheet of each submittal with QC certifying statement or approving statement, except that data submitted in bound volume or on one sheet printed on two sides may be stamped on the front of the first sheet only.

(1) When approving authority is Contracting Officer, QC organization will certify submittals forwarded to Contracting Officer with the following certifying statement:

"I hereby certify that the (equipment) (material) (article) shown and marked in this submittal is that proposed to be incorporated with contract Number (insert contract number here), is in compliance with the contract drawings and specification, can be installed in the allocated spaces, and is submitted for Government approval.

Certified by Submittal Reviewer _____, Date _____
(Signature when applicable)

Certified by QC Manager _____, Date _____"
(Signature)

(2) When approving authority is QC Manager, QC Manager will use the following approval statement when returning submittals to Contractor as "Approved" or "Approved as Noted."

"I hereby certify that the (material) (equipment) (article) shown and marked in this submittal and proposed to be incorporated with contract Number (insert contract number here), is in compliance with the contract drawings and specification, can be installed in the allocated spaces, and is approved for use.

Certified by Submittal Reviewer _____, Date _____
(Signature when applicable)

Approved by QC Manager _____, Date _____"
(Signature)

g. Sign certifying statement or approval statement. The QC organization member designated in the approved QC plan is the person signing certifying statements. The use of original ink for signatures is required. Stamped signatures are not acceptable.

h. Update submittal register as submittal actions occur and maintain the submittal register at project site until final acceptance of all work by Contracting Officer.

i. Retain a copy of approved submittals at project site, including Contractor's copy of approved samples.

1.11 GOVERNMENT APPROVING AUTHORITY

When approving authority is Contracting Officer, the Government will:

a. Note date on which submittal was received from QC Manager.

b. Review submittals for approval within scheduling period specified and

only for conformance with project design concepts and compliance with contract documents.

c. Identify returned submittals with one of the actions defined in paragraph entitled "Review Notations" of this section and with markings appropriate for action indicated.

Upon completion of review of submittals requiring Government approval, stamp and date approved submittals. Two copies of the approved submittal will be retained by the Contracting Officer and remaining copies of the submittal will be returned to the Contractor.

1.11.1 Review Notations

Contracting Officer review will be completed within 30 calendar days after date of submission. Submittals will be returned to the Contractor with the following notations:

a. Submittals marked "approved" or "accepted" authorize the Contractor to proceed with the work covered.

b. Submittals marked "approved as noted" "or approved except as noted, resubmittal not required," authorize the Contractor to proceed with the work covered provided he takes no exception to the corrections.

c. Submittals marked "not approved" or "disapproved," or "revise and resubmit," indicate noncompliance with the contract requirements or design concept, or that submittal is incomplete. Resubmit with appropriate changes. No work shall proceed for this item until resubmittal is approved.

d. Submittals marked "not reviewed" will indicate submittal has been previously reviewed and approved, is not required , does not have evidence of being reviewed and approved by Contractor, or is not complete. A submittal marked "not reviewed" will be returned with an explanation of the reason it is not reviewed. Resubmit submittals returned for lack of review by Contractor or for being incomplete, with appropriate action, coordination, or change.

1.12 DISAPPROVED OR REJECTED SUBMITTALS

Contractor shall make corrections required by the Contracting Officer. If the Contractor considers any correction or notation on the returned submittals to constitute a change to the contract drawings or specifications; notice as required under the clause entitled, "Changes," is to be given to the Contracting Officer. Contractor is responsible for the dimensions and design of connection details and construction of work. Failure to point out deviations may result in the Government requiring rejection and removal of such work at the Contractor's expense.

If changes are necessary to submittals, the Contractor shall make such revisions and submission of the submittals in accordance with the procedures above. No item of work requiring a submittal change is to be accomplished until the changed submittals are approved.

1.13 APPROVED/ACCEPTED SUBMITTALS

The Contracting Officer's approval or acceptance of submittals is not to be construed as a complete check, and indicates only that the general method

of construction, materials, detailing, and other information are satisfactory.

Approval or acceptance will not relieve the Contractor of the responsibility for any error which may exist, as the Contractor under the Contractor Quality Control (CQC) requirements of this contract is responsible for dimensions, the design of adequate connections and details, and the satisfactory construction of all work.

After submittals have been approved or accepted by the Contracting Officer, no resubmittal for the purpose of substituting materials or equipment will be considered unless accompanied by an explanation of why a substitution is necessary.

1.14 APPROVED SAMPLES

Approval of a sample is only for the characteristics or use named in such approval and is not be construed to change or modify any contract requirements. Before submitting samples, the Contractor to assure that the materials or equipment will be available in quantities required in the project. No change or substitution will be permitted after a sample has been approved.

Match the approved samples for materials and equipment incorporated in the work. If requested, approved samples, including those which may be damaged in testing, will be returned to the Contractor, at his expense, upon completion of the contract. Samples not approved will also be returned to the Contractor at its expense, if so requested.

Failure of any materials to pass the specified tests will be sufficient cause for refusal to consider, under this contract, any further samples of the same brand or make of that material. Government reserves the right to disapprove any material or equipment which previously has proved unsatisfactory in service.

Samples of various materials or equipment delivered on the site or in place may be taken by the Contracting Officer for testing. Samples failing to meet contract requirements will automatically void previous approvals. Contractor to replace such materials or equipment to meet contract requirements.

Approval of the Contractor's samples by the Contracting Officer does not relieve the Contractor of his responsibilities under the contract.

PART 2 PRODUCTS

Not Used.

PART 3 EXECUTION

Not Used.

-- End of Section --

THIS PAGE HAS BEEN INTENTIONALLY LEFT BLANK

SUBMITTAL REGISTER

CONTRACT NO.
1393229

TITLE AND LOCATION
P1396B SOF INTEL OPS EXPANSION - PHASE II

CONTRACTOR

ACTIVITY NO	TRANSMITTAL NO	SPEC SECT	DESCRIPTION ITEM SUBMITTED	PARAGRAPH #	CLASSIFICATION	GOVT OR A/E REVWR	CONTRACTOR: SCHEDULE DATES			CONTRACTOR ACTION			APPROVING AUTHORITY					
							SUBMIT	APPROVAL NEEDED BY	MATERIAL NEEDED BY	ACTION CODE	DATE OF ACTION	DATE FWD TO APPR AUTH/ DATE RCD FROM CONTR	DATE FWD TO OTHER REVIEWER	DATE RCD FROM OTH REVIEWER	ACTION CODE	DATE OF ACTION	MAILED TO CONTR/ DATE RCD FRM APPR AUTH	REMARKS
(a)	(b)	(c)	(d)	(e)	(f)		(g)	(h)	(i)	(j)	(k)	(l)	(m)	(n)	(o)	(p)	(q)	(r)
		01 11 00	SD-07 Certificates															
			Energy Performance Rating	1.6.1.2														
		01 14 00	SD-01 Preconstruction Submittals															
			List of Contact Personnel	1.3.1.1	G													
		01 20 00.00 20	SD-01 Preconstruction Submittals															
			EARNED VALUE REPORT	1.3	G													
		01 30 00	SD-01 Preconstruction Submittals															
			View location map	1.2	G													
			Progress and completion pictures	1.3	G													
		01 30 01.00 22	SD-02 Shop Drawings															
			Preliminary (Pre-Final) FF&E	1.5.3	G	ID												
			Package															
			Final FF&E Package	1.5.7	G	ID												
			Best Value Determination	1.6	G	ID												
			SD-07 Certificates															
			Contractor's Interior Designer's	1.4.1	G	ID												
			Qualifications															
			SD-11 Closeout Submittals															
			Punch List Documentation	3.5	G													
			Factory Ordering Documentation	3.3	G													
		01 32 17.00 20	SD-01 Preconstruction Submittals															
			Qualifications	1.5	G													
			Baseline Network Analysis	1.3	G													
			Schedule															
			SD-07 Certificates															
			Monthly Network Analysis	1.7.1	G													

SUBMITTAL REGISTER

CONTRACT NO.
1393229

TITLE AND LOCATION
P1396B SOF INTEL OPS EXPANSION - PHASE II

CONTRACTOR

ACTIVITY NO	TRANSMITTAL NO	SPEC SECT	DESCRIPTION ITEM SUBMITTED	PARAGRAPH #	CLASSIFICATION	GOVT OR A/E REVWR	CONTRACTOR: SCHEDULE DATES			CONTRACTOR ACTION			APPROVING AUTHORITY					
							SUBMIT	APPROVAL NEEDED BY	MATERIAL NEEDED BY	ACTION CODE	DATE OF ACTION	DATE FWD TO APPR AUTH/ DATE RCD FROM CONTR	DATE FWD TO OTHER REVIEWER	DATE RCD FROM OTH REVIEWER	ACTION CODE	DATE OF ACTION	MAILED TO CONTR/ DATE RCD FRM APPR AUTH	REMARKS
(a)	(b)	(c)	(d)	(e)	(f)		(g)	(h)	(i)	(j)	(k)	(l)	(m)	(n)	(o)	(p)	(q)	(r)
		01 32 17.00 20	SD-11 Closeout Submittals															
			As-Built Schedule	1.7.2	G													
		01 33 00	SD-01 Preconstruction Submittals															
			Submittal register	1.9	G													
		01 33 29	SD-01 Preconstruction Submittals															
			Preliminary Sustainability	1.5.2.1	G													
			Notebook															
			Preliminary High Performance	1.5.2.1														
			and Sustainable Building Checklist															
			SD-07 Certificates															
			Third Party Certification (TPC)	1.4.5														
			SD-11 Closeout Submittals															
			Final Sustainability Notebook	1.5.2.1	G													
			Final High Performance and	1.5.2.1	G													
			Sustainable Building Checklist															
			Amended Final Sustainability	1.5.2.1	G													
			Notebook															
			Third Party Certification Plaque	3.2.1	G													
			and Certificates															
		01 35 26	SD-01 Preconstruction Submittals															
			Accident Prevention Plan (APP)	1.7	G	A												
			Activity Hazard Analysis (AHA)	1.8	G	A												
			Crane Critical Lift Plan	1.7.1	G	A												
			Crane Operators	1.6.1.3	G	A												
			Traffic Control Plan	1.17.1	G	A												
			Standard Hand Signals	1.17.2.1	G	A												

SUBMITTAL REGISTER

CONTRACT NO.
1393229

TITLE AND LOCATION
P1396B SOF INTEL OPS EXPANSION - PHASE II

CONTRACTOR

ACTIVITY NO	TRANSMITTAL NO	SPEC SECT	DESCRIPTION ITEM SUBMITTED	PARAGRAPH #	CLASSIFICATION	GOVT OR A/E REVWR	CONTRACTOR: SCHEDULE DATES			CONTRACTOR ACTION			APPROVING AUTHORITY					
							SUBMIT	APPROVAL NEEDED BY	MATERIAL NEEDED BY	ACTION CODE	DATE OF ACTION	DATE FWD TO APPR AUTH/ DATE RCD FROM CONTR	DATE FWD TO OTHER REVIEWER	DATE RCD FROM OTH REVIEWER	ACTION CODE	DATE OF ACTION	MAILED TO CONTR/ DATE RCD FRM APPR AUTH	REMARKS
(a)	(b)	(c)	(d)	(e)	(f)		(g)	(h)	(i)	(j)	(k)	(l)	(m)	(n)	(o)	(p)	(q)	(r)
		01 35 26	SD-06 Test Reports															
			Notifications and Reports	1.12														
			Accident Reports	1.12.2														
			Crane Reports	1.12.3														
			Arc Flash Risk/Hazard Analysis	3.8.2	G													
			SD-07 Certificates															
			Confined Space Entry Permit	1.9														
			Hot work permit	1.9														
			Arc Flash Risk/Hazard Analysis	3.8.3	G													
			Qualifications															
			Contractor Electrical Energized	3.8.4	G													
			Work Permit															
			Contractor Safety Self-Evaluation	1.4	G	A												
			Checklist															
			Certificate of Compliance	1.12.4														
		01 45 00.00 20	SD-01 Preconstruction Submittals															
			Construction Quality Control (QC)	1.6.1	G													
			Plan															
			LEED NC commissioning Plan	1.4.1	G													
			Indoor Air Quality (IAQ)	1.18	G													
			Management Plan															
			SD-06 Test Reports															
			Acceptance Testing of Critical	1.4.1														
			Systems Checklist															
			SD-07 Certificates															

SUBMITTAL REGISTER

CONTRACT NO.
1393229

TITLE AND LOCATION
P1396B SOF INTEL OPS EXPANSION - PHASE II

CONTRACTOR

ACTIVITY NO	TRANSMITTAL NO	SPEC SECT	DESCRIPTION ITEM SUBMITTED	PARAGRAPH #	CLASSIFICATION	GOVT OR A/E REVWR	CONTRACTOR: SCHEDULE DATES			CONTRACTOR ACTION			APPROVING AUTHORITY					
							SUBMIT	APPROVAL NEEDED BY	MATERIAL NEEDED BY	ACTION CODE	DATE OF ACTION	DATE FWD TO APPR AUTH/ DATE RCD FROM CONTR	DATE FWD TO OTHER REVIEWER	DATE RCD FROM OTH REVIEWER	ACTION CODE	DATE OF ACTION	MAILED TO CONTR/ DATE RCD FRM APPR AUTH	REMARKS
(a)	(b)	(c)	(d)	(e)	(f)		(g)	(h)	(i)	(j)	(k)	(l)	(m)	(n)	(o)	(p)	(q)	(r)
		01 45 00.00 20	ICC IBC Special Inspections	1.5.4.1	G													
			Certification															
			ICC IBC Special Inspections	1.5.4.2	G													
			Certification															
			ICC IBC Special Inspections	1.5.4.3	G													
			Certification															
			ICC IBC Special Inspections	1.5.4.4	G													
			Certification															
			ICC IBC Special Inspections	1.5.4.5	G													
			Certification															
		01 50 00	SD-01 Preconstruction Submittals															
			Traffic control plan	3.3.1	G													
			Construction site plan	1.4	G													
			SD-06 Test Reports															
			Backflow Preventer Tests	2.2.5	G													
			SD-07 Certificates															
			Backflow Tester	1.5.1	G													
			Backflow Preventers	1.5														
		01 57 13.00 22	SD-01 Preconstruction Submittals															
			Construction Sequence Schedule	1.4	G													
			SD-03 Product Data															
			Sediment Fence	2.1														
			Dust Suppressors	2.4														
			Erosion Control Matting	2.6														
			Filter Fabric	2.3.1.2														
		01 57 19.00 20	SD-01 Preconstruction Submittals															

SUBMITTAL REGISTER

CONTRACT NO.
1393229

TITLE AND LOCATION
P1396B SOF INTEL OPS EXPANSION - PHASE II

CONTRACTOR

ACTIVITY NO	TRANSMITTAL NO	SPEC SECT	DESCRIPTION ITEM SUBMITTED	PARAGRAPH #	CLASSIFICATION	GOVT OR A/E REVWR	CONTRACTOR: SCHEDULE DATES			CONTRACTOR ACTION			APPROVING AUTHORITY					
							SUBMIT	APPROVAL NEEDED BY	MATERIAL NEEDED BY	ACTION CODE	DATE OF ACTION	DATE FWD TO APPR AUTH/ DATE RCD FROM CONTR	DATE FWD TO OTHER REVIEWER	DATE RCD FROM OTH REVIEWER	ACTION CODE	DATE OF ACTION	MAILED TO CONTR/ DATE RCD FRM APPR AUTH	REMARKS
(a)	(b)	(c)	(d)	(e)	(f)		(g)	(h)	(i)	(j)	(k)	(l)	(m)	(n)	(o)	(p)	(q)	(r)
		01 57 19.00 20	Preconstruction Survey	1.5.1	G													
			Solid Waste Management Plan	3.4	G													
			and Permit															
			Regulatory Notifications	1.5.2	G													
			Environmental Management Plan	3.1	G													
			Storm Water Pollution Prevention	3.2.2.1	G													
			Plan															
			Air Emissions Source	3.2.5	G													
			Specification Data															
			Dirt and Dust Control Plan	3.15.1														
			Contractor Hazardous Material	3.6	G													
			Inventory Log															
			SD-06 Test Reports															
			Laboratory Analysis	3.14.2.2														
			Disposal Requirements	3.16.2														
			Erosion and Sediment Control	3.2.2														
			Inspection Reports															
			Storm Water Inspection Reports	3.2.2														
			for General Permit															
			Contractor 40 CFR employee	1.5.5														
			training records															
			Solid Waste Management Report	3.4.1	G													
			SD-11 Closeout Submittals															
			Storm Water Pollution Prevention	3.2.2.2	G													
			Plan compliance notebook															

SUBMITTAL REGISTER

CONTRACT NO. 1393229

TITLE AND LOCATION: P1396B SOF INTEL OPS EXPANSION - PHASE II

CONTRACTOR

ACTIVITY NO	TRANSMITTAL NO	SPEC SECT	DESCRIPTION ITEM SUBMITTED	PARAGRAPH #	CLASSIFICATION	GOVT OR A/E REVWR	CONTRACTOR: SCHEDULE DATES			CONTRACTOR ACTION			APPROVING AUTHORITY					
							SUBMIT	APPROVAL NEEDED BY	MATERIAL NEEDED BY	ACTION CODE	DATE OF ACTION	DATE FWD TO APPR AUTH/ DATE RCD FROM CONTR	DATE FWD TO OTHER REVIEWER	DATE RCD FROM OTH REVIEWER	ACTION CODE	DATE OF ACTION	MAILED TO CONTR/ DATE RCD FRM APPR AUTH	REMARKS
(a)	(b)	(c)	(d)	(e)	(f)		(g)	(h)	(i)	(j)	(k)	(l)	(m)	(n)	(o)	(p)	(q)	(r)
		01 57 19.00 20	Waste Determination	3.5														
			Documentation															
			Disposal Documentation for	3.6.1														
			Hazardous and Regulated Waste															
			Contractor 40 CFR Employee	1.5.5														
			Training Records															
			Solid Waste Management Permit	3.4														
			Solid Waste Management Report	3.4.1														
			Contractor Hazardous Material	3.6	G													
			Inventory Log															
			Hazardous Waste/Debris	3.14.2														
			Management															
			Regulatory Notifications	1.5.2														
		01 58 00	SD-02 Shop Drawings															
			preliminary drawing indicating	1.4.1	G													
			layout and text content															
			SD-04 Samples															
			Facility Recognition Plaque	1.3.1	G													
		01 60 00.00 22	SD-07 Certificates															
			Certificate of North Carolina	1.2.1	G													
			Licensed Applicator															
			SD-11 Closeout Submittals															
			Field Pesticide/Herbicide	3.2	G													
			Management Record Form															
		01 74 19	SD-01 Preconstruction Submittals															
			Waste Management Plan	1.6	G													

SUBMITTAL REGISTER

CONTRACT NO.
1393229

TITLE AND LOCATION
P1396B SOF INTEL OPS EXPANSION - PHASE II

CONTRACTOR

ACTIVITY NO	TRANSMITTAL NO	SPEC SECT	DESCRIPTION ITEM SUBMITTED	PARAGRAPH #	CLASSIFICATION	GOVT OR A/E REVWR	CONTRACTOR: SCHEDULE DATES			CONTRACTOR ACTION			APPROVING AUTHORITY					
							SUBMIT	APPROVAL NEEDED BY	MATERIAL NEEDED BY	ACTION CODE	DATE OF ACTION	DATE FWD TO APPR AUTH/ DATE RCD FROM CONTR	DATE FWD TO OTHER REVIEWER	DATE RCD FROM OTH REVIEWER	ACTION CODE	DATE OF ACTION	MAILED TO CONTR/ DATE RCD FRM APPR AUTH	REMARKS
(a)	(b)	(c)	(d)	(e)	(f)		(g)	(h)	(i)	(j)	(k)	(l)	(m)	(n)	(o)	(p)	(q)	(r)
		01 74 19	SD-11 Closeout Submittals															
			Records	1.7														
		01 78 00	SD-03 Product Data															
			As-Built Record of Equipment	1.3.2														
			and Materials															
			Warranty Management Plan	1.7.1														
			Warranty Tags	1.7.4														
			Final Cleaning	1.10														
			Spare Parts Data	1.4														
			SD-08 Manufacturer's Instructions															
			Preventative Maintenance	1.5														
			Condition Monitoring (Predictive	1.5														
			Testing)															
			Inspection	1.5														
			Instructions	1.7.1														
			SD-10 Operation and Maintenance															
			Data															
			Operation and Maintenance	1.9														
			Manuals															
			SD-11 Closeout Submittals															
			Record Drawings	1.3.1														
			NAVFAC Sustainable & Energy	1.13	G													
			Data Record Card															
			Certification of EPA Designated	1.6	G													
			Items															

SUBMITTAL REGISTER

CONTRACT NO.
1393229

TITLE AND LOCATION
P1396B SOF INTEL OPS EXPANSION - PHASE II

CONTRACTOR

ACTIVITY NO	TRANSMITTAL NO	SPEC SECT	DESCRIPTION ITEM SUBMITTED	PARAGRAPH #	CLASSIFICATION	GOVT OR A/E REVWR	CONTRACTOR: SCHEDULE DATES			CONTRACTOR ACTION			APPROVING AUTHORITY					MAILED TO CONTR/ DATE RCD FRM APPR AUTH	REMARKS
							SUBMIT	APPROVAL NEEDED BY	MATERIAL NEEDED BY	ACTION CODE	DATE OF ACTION	DATE FWD TO APPR AUTH/ DATE RCD FROM CONTR	DATE FWD TO OTHER REVIEWER	DATE RCD FROM OTH REVIEWER	ACTION CODE	DATE OF ACTION		
(a)	(b)	(c)	(d)	(e)	(f)		(g)	(h)	(i)	(j)	(k)	(l)	(m)	(n)	(o)	(p)	(q)	(r)
		01 78 00	Preliminary Interim DD Form 1354	1.11	G													
			Updated Interim DD Form 1354	1.11	G													
		01 78 24.00 20	SD-07 Certificates															
			Qualifications of eOMSI Preparer	1.6	G													
			Qualifications of eOMSI Preparer	1.6	G													
			SD-10 Operation and Maintenance Data															
			Training Plan	3.1.1	G													
			Training Plan	3.1.1	G													
			Training Plan	3.1.1	G													
			Training Outline	3.1.3	G													
			Training Content	3.1.2	G													
			SD-11 Closeout Submittals															
			eOMSI, Preliminary Submittal	1.9.1	G													
			eOMSI, 100 percent, Prefinal Submittal	1.9.2	G													
			eOMSI, Final Submittal	1.9.3	G													
			Training Video Recording	3.1.4	G													
			Validation of Training Completion	3.1.6	G													
		01 78 30.00 22	SD-11 Closeout Submittals															
			GIS Data Deliverables	1.3.7	G													
		03 30 00	SD-01 Preconstruction Submittals															
			Concrete Curing Plan	1.6.3.1														
			Quality Control Plan	1.6.6	G													

SUBMITTAL REGISTER

CONTRACT NO. 1393229

TITLE AND LOCATION: P1396B SOF INTEL OPS EXPANSION - PHASE II

CONTRACTOR

ACTIVITY NO	TRANSMITTAL NO	SPEC SECT	DESCRIPTION ITEM SUBMITTED	PARAGRAPH #	CLASSIFICATION	GOVT OR A/E REVWR	CONTRACTOR: SCHEDULE DATES			CONTRACTOR ACTION			APPROVING AUTHORITY					
							SUBMIT	APPROVAL NEEDED BY	MATERIAL NEEDED BY	ACTION CODE	DATE OF ACTION	DATE FWD TO APPR AUTH/ DATE RCD FROM CONTR	DATE FWD TO OTHER REVIEWER	DATE RCD FROM OTH REVIEWER	ACTION CODE	DATE OF ACTION	MAILED TO CONTR/ DATE RCD FRM APPR AUTH	REMARKS
(a)	(b)	(c)	(d)	(e)	(f)		(g)	(h)	(i)	(j)	(k)	(l)	(m)	(n)	(o)	(p)	(q)	(r)
		03 30 00	Quality Control Personnel	1.6.7	G													
			Certifications															
			Quality Control Organizational	1.6.7														
			Chart															
			Laboratory Accreditation	1.6.9	G													
			SD-02 Shop Drawings															
			Reinforcing steel	1.6.2.1	G													
			SD-03 Product Data															
			Joint sealants	2.4.7														
			Joint filler	2.4.6														
			Materials for Forms	2.1														
			Cementitious Materials	2.4.1														
			Vapor retarder	2.4.5														
			Concrete Curing Materials	2.3.3														
			Reinforcement	2.5														
			Liquid Chemical Floor Hardener	2.6.1														
			Admixtures	2.4.4														
			Mechanical Reinforcing Bar	2.5.2														
			Connectors															
			Waterstops	2.2.1														
			Local/Regional Materials	1.8.1														
			Biodegradable Form Release	2.4.8														
			Agent															
			SD-05 Design Data															
			mix design	2.3.1	G													
			SD-06 Test Reports															

SUBMITTAL REGISTER

CONTRACT NO. 1393229

TITLE AND LOCATION: P1396B SOF INTEL OPS EXPANSION - PHASE II

CONTRACTOR

ACTIVITY NO	TRANSMITTAL NO	SPEC SECT	DESCRIPTION ITEM SUBMITTED	PARAGRAPH #	CLASSIFICATION	GOVT OR A/E REVWR	CONTRACTOR: SCHEDULE DATES			CONTRACTOR ACTION			APPROVING AUTHORITY					
							SUBMIT	APPROVAL NEEDED BY	MATERIAL NEEDED BY	ACTION CODE	DATE OF ACTION	DATE FWD TO APPR AUTH/ DATE RCD FROM CONTR	DATE FWD TO OTHER REVIEWER	DATE RCD FROM OTH REVIEWER	ACTION CODE	DATE OF ACTION	MAILED TO CONTR/ DATE RCD FRM APPR AUTH	REMARKS
(a)	(b)	(c)	(d)	(e)	(f)		(g)	(h)	(i)	(j)	(k)	(l)	(m)	(n)	(o)	(p)	(q)	(r)
		03 30 00	Concrete mix design	1.6.1.1	G													
			Fly ash	1.6.4.1														
			Pozzolan	1.6.4.1														
			Ground granulated blast-furnace	1.6.4.2														
			slag															
			Tolerance report	3.10.2.1														
			Compressive strength tests	3.14.2.3	G													
			Unit weight of structural concrete	3.14.2.5														
			Air Content	3.14.2.4														
			Slump Tests	3.14.2.1														
			Water	2.4.2														
			SD-07 Certificates															
			Reinforcing Bars	2.5.1														
			Welder Qualifications	1.9														
			VOC Content for form release	1.6.3.2														
			agents, curing compounds, and															
			concrete penetrating sealers															
			Material Safety Data Sheets	1.6.3.3														
			Field Testing Technician and	1.6.7.2														
			Testing Agency															
			SD-08 Manufacturer’s Instructions															
			Liquid Chemical Floor Hardener	2.6.1														
			Curing Compound	2.3.3														
		03 45 00	SD-02 Shop Drawings															
			Precast Components	1.6	G													
			Precast Components	1.11.1	G													

SUBMITTAL REGISTER

CONTRACT NO.
1393229

TITLE AND LOCATION
P1396B SOF INTEL OPS EXPANSION - PHASE II

CONTRACTOR

ACTIVITY NO	TRANSMITTAL NO	SPEC SECT	DESCRIPTION ITEM SUBMITTED	PARAGRAPH #	CLASSIFICATION	GOVT OR A/E REVWR	CONTRACTOR: SCHEDULE DATES			CONTRACTOR ACTION			APPROVING AUTHORITY					
							SUBMIT	APPROVAL NEEDED BY	MATERIAL NEEDED BY	ACTION CODE	DATE OF ACTION	DATE FWD TO APPR AUTH/ DATE RCD FROM CONTR	DATE FWD TO OTHER REVIEWER	DATE RCD FROM OTH REVIEWER	ACTION CODE	DATE OF ACTION	MAILED TO CONTR/ DATE RCD FRM APPR AUTH	REMARKS
(a)	(b)	(c)	(d)	(e)	(f)		(g)	(h)	(i)	(j)	(k)	(l)	(m)	(n)	(o)	(p)	(q)	(r)
		03 45 00	Precast Components	1.11.5	G													
			SD-03 Product Data															
			Cast-in embedded items and	2.4	G													
			connectors															
			Connection devices	2.4.4	G													
			SD-04 Samples															
			Precast Components	1.6														
			Precast Components	1.11.1														
			Precast Components	1.11.5														
			Cast Stone	1.4														
			Cast Stone	Part 2														
			SD-05 Design Data															
			design calculations	1.11.2														
			Contractor-furnished mix design	2.2.1														
			repair of surface defects	2.5.9														
			connection and embedment	1.11.3														
			design calculations															
			SD-06 Test Reports															
			Strength tests	3.15.1.2	G													
			SD-07 Certificates															
			Manufacturer's Qualifications	1.4	G													
			SD-08 Manufacturer’s Instructions															
			Installation	3.3	G													
			Cleaning	3.14	G													
			SD-11 Closeout Submittals															
			batch ticket information	1.11.6	G													

SUBMITTAL REGISTER

CONTRACT NO.
1393229

TITLE AND LOCATION
P1396B SOF INTEL OPS EXPANSION - PHASE II

CONTRACTOR

ACTIVITY NO	TRANSMITTAL NO	SPEC SECT	DESCRIPTION ITEM SUBMITTED	PARAGRAPH #	CLASSIFICATION	GOVT OR A/E REVWR	CONTRACTOR: SCHEDULE DATES			CONTRACTOR ACTION			APPROVING AUTHORITY					
							SUBMIT	APPROVAL NEEDED BY	MATERIAL NEEDED BY	ACTION CODE	DATE OF ACTION	DATE FWD TO APPR AUTH/ DATE RCD FROM CONTR	DATE FWD TO OTHER REVIEWER	DATE RCD FROM OTH REVIEWER	ACTION CODE	DATE OF ACTION	MAILED TO CONTR/ DATE RCD FRM APPR AUTH	REMARKS
(a)	(b)	(c)	(d)	(e)	(f)		(g)	(h)	(i)	(j)	(k)	(l)	(m)	(n)	(o)	(p)	(q)	(r)
		03 45 00	Calculations	1.5.5														
			Mix Design	1.5.6														
			Precast Concrete Manufacturer	1.4														
			Precast Concrete Installer	1.9														
			Concrete	1.10.2														
			Exposed-to-View Concrete	1.10.2														
			Backing Concrete	1.10.2														
			Slump	1.10.3														
			Air Content	1.10.3														
			Compressive Strength	1.10.3														
			Mock-Up	1.11.7														
			Pre-Installation Meeting	1.11.8														
			Tolerances	1.12														
			Portland Cement	2.3.16														
			Exposed-to-View Finished	2.3.16														
			Surfaces															
			Air-Entrained Admixtures	2.3.18														
			Finish Aggregate	2.5.16														
			Gasket	2.6														
			Erection	3.4														
		04 20 00	SD-02 Shop Drawings															
			Detail Drawings	1.4.5	G													
			SD-03 Product Data															
			Local/Regional Materials	1.2.1														
			Environmental Data	1.2.2														
			Clay or Shale Brick	2.2	G													

SUBMITTAL REGISTER

CONTRACT NO. 1393229

TITLE AND LOCATION: P1396B SOF INTEL OPS EXPANSION - PHASE II

CONTRACTOR

ACTIVITY NO	TRANSMITTAL NO	SPEC SECT	DESCRIPTION ITEM SUBMITTED	PARAGRAPH #	CLASSIFICATION	GOVT OR A/E REVWR	CONTRACTOR: SCHEDULE DATES			CONTRACTOR ACTION			APPROVING AUTHORITY					
							SUBMIT	APPROVAL NEEDED BY	MATERIAL NEEDED BY	ACTION CODE	DATE OF ACTION	DATE FWD TO APPR AUTH/ DATE RCD FROM CONTR	DATE FWD TO OTHER REVIEWER	DATE RCD FROM OTH REVIEWER	ACTION CODE	DATE OF ACTION	MAILED TO CONTR/ DATE RCD FRM APPR AUTH	REMARKS
(a)	(b)	(c)	(d)	(e)	(f)		(g)	(h)	(i)	(j)	(k)	(l)	(m)	(n)	(o)	(p)	(q)	(r)
		04 20 00	Clay or Shale Brick	2.3	G													
			Cement	2.8.3														
			Cold Weather Installation	1.6.2														
			Cavity Mortar Guard Mesh	2.17	G													
			Manufactured Masonry Veneer	2.6	G ID													
			SD-04 Samples															
			Concrete Masonry Units (CMU)	2.2	G													
			Concrete Masonry Units (CMU)	2.5	G													
			Clay or Shale Brick	2.2	G													
			Clay or Shale Brick	2.3	G													
			Anchors, Ties, and Bar	2.10														
			Positioners															
			Expansion-Joint Materials	2.14														
			Joint Reinforcement	2.11														
			Wall Panel Mock-up	1.4.3														
			Manufactured Masonry Veneer	2.6	G ID													
			Pre-mixed Mortar	2.9.3	G ID													
			SD-05 Design Data															
			Unit Strength Method	1.2.4.2	G													
			SD-06 Test Reports															
			Efflorescence Test	3.19.3														
			Field Testing of Mortar	3.19.1	G													
			Field Testing of Grout	3.19.2	G													
			Prism tests	3.19.4	G													
			Masonry Cement	2.8.3	G													
			Fire-rated CMU	2.5.2	G													

SUBMITTAL REGISTER

CONTRACT NO.
1393229

TITLE AND LOCATION
P1396B SOF INTEL OPS EXPANSION - PHASE II

CONTRACTOR

ACTIVITY NO	TRANSMITTAL NO	SPEC SECT	DESCRIPTION ITEM SUBMITTED	PARAGRAPH #	CLASSIFICATION	GOVT OR A/E REVWR	CONTRACTOR: SCHEDULE DATES			CONTRACTOR ACTION			APPROVING AUTHORITY					
							SUBMIT	APPROVAL NEEDED BY	MATERIAL NEEDED BY	ACTION CODE	DATE OF ACTION	DATE FWD TO APPR AUTH/ DATE RCD FROM CONTR	DATE FWD TO OTHER REVIEWER	DATE RCD FROM OTH REVIEWER	ACTION CODE	DATE OF ACTION	MAILED TO CONTR/ DATE RCD FRM APPR AUTH	REMARKS
(a)	(b)	(c)	(d)	(e)	(f)		(g)	(h)	(i)	(j)	(k)	(l)	(m)	(n)	(o)	(p)	(q)	(r)
		04 20 00	Masonry Inspector Qualifications	1.4.4	G													
			SD-07 Certificates															
			Clay or Shale Brick	2.2														
			Clay or Shale Brick	2.3														
			Concrete Brick	2.4														
			Concrete Masonry Units (CMU)	2.2														
			Concrete Masonry Units (CMU)	2.5														
			Anchors, Ties, and Bar	2.10														
			Positioners															
			Expansion-Joint Materials	2.14														
			Joint Reinforcement	2.11														
			Masonry Cement	2.8.3														
			Admixtures for Masonry Mortar	2.8.1														
			Admixtures for Grout	2.9.1														
			Contamination	1.4.2														
			SD-08 Manufacturer’s Instructions															
			Masonry Cement	2.8.3														
			SD-10 Operation and Maintenance															
			Data															
			Plastic Identification	1.2.3														
			Take-Back Program	3.18.2														
		05 12 00	SD-01 Preconstruction Submittals															
			Erection Drawings	1.5.1.1	G													
			SD-02 Shop Drawings															
			Fabrication drawings	1.5.2	G													
			SD-03 Product Data															

SUBMITTAL REGISTER

CONTRACT NO. 1393229

TITLE AND LOCATION: P1396B SOF INTEL OPS EXPANSION - PHASE II

CONTRACTOR

ACTIVITY NO	TRANSMITTAL NO	SPEC SECT	DESCRIPTION ITEM SUBMITTED	PARAGRAPH #	CLASSIFICATION	GOVT OR A/E REVWR	CONTRACTOR: SCHEDULE DATES			CONTRACTOR ACTION			APPROVING AUTHORITY					
							SUBMIT	APPROVAL NEEDED BY	MATERIAL NEEDED BY	ACTION CODE	DATE OF ACTION	DATE FWD TO APPR AUTH/ DATE RCD FROM CONTR	DATE FWD TO OTHER REVIEWER	DATE RCD FROM OTH REVIEWER	ACTION CODE	DATE OF ACTION	MAILED TO CONTR/ DATE RCD FRM APPR AUTH	REMARKS
(a)	(b)	(c)	(d)	(e)	(f)		(g)	(h)	(i)	(j)	(k)	(l)	(m)	(n)	(o)	(p)	(q)	(r)
		05 12 00	Shop primer	2.6.2														
			Welding electrodes and rods	2.4.1														
			Non-Shrink Grout	2.4.2														
			SD-06 Test Reports															
			Class B coating	2.6.2														
			Bolts, nuts, and washers	2.3														
			Bolt Testing Reports	3.7.3.1														
			Embrittlement Test Reports	3.7.4														
			SD-07 Certificates															
			Steel	2.2														
			Bolts, nuts, and washers	2.3														
			Galvanizing	2.5														
			AISC Fabrication Plant Quality	1.3														
			Certification															
			AISC Erector Quality Certification	1.3														
			Welding procedures and	1.5.3.1														
			qualifications															
			Welding electrodes and rods	2.4.1														
		05 21 16	SD-01 Preconstruction Submittals															
			Welder qualification	1.4.2														
			Material Safety Data Sheet	1.4.2														
			SD-02 Shop Drawings															
			Longspan Steel Joist Framing	1.4.1	G													
			SD-06 Test Reports															
			Erection inspection	3.3														
			Welding inspections	3.3														

SUBMITTAL REGISTER

CONTRACT NO.
1393229

TITLE AND LOCATION
P1396B SOF INTEL OPS EXPANSION - PHASE II

CONTRACTOR

ACTIVITY NO	TRANSMITTAL NO	SPEC SECT	DESCRIPTION ITEM SUBMITTED	PARAGRAPH #	CLASSIFICATION	GOVT OR A/E REVWR	CONTRACTOR: SCHEDULE DATES			CONTRACTOR ACTION			APPROVING AUTHORITY					
							SUBMIT	APPROVAL NEEDED BY	MATERIAL NEEDED BY	ACTION CODE	DATE OF ACTION	DATE FWD TO APPR AUTH/ DATE RCD FROM CONTR	DATE FWD TO OTHER REVIEWER	DATE RCD FROM OTH REVIEWER	ACTION CODE	DATE OF ACTION	MAILED TO CONTR/ DATE RCD FRM APPR AUTH	REMARKS
(a)	(b)	(c)	(d)	(e)	(f)		(g)	(h)	(i)	(j)	(k)	(l)	(m)	(n)	(o)	(p)	(q)	(r)
		05 21 16	SD-07 Certificates															
			Accessories	1.4.1														
			Certification of Compliance	1.4.2														
		05 21 19	SD-01 Preconstruction Submittals															
			Welder qualification	1.5.2														
			Material Safety Data Sheet	1.5.2														
			SD-02 Shop Drawings															
			Steel joist framing	1.5.1	G													
			SD-06 Test Reports															
			Erection inspection	3.3.1														
			Welding inspections	3.3.1														
			SD-07 Certificates															
			Accessories	2.1														
			Certification of Compliance	1.5.2														
		05 30 00	SD-02 Shop Drawings															
			Fabrication Drawings	1.3.4														
			Cant Strips	2.3.1.1														
			Ridge and Valley Plates	2.3.1.2														
			Metal Closure Strips	2.3.1.3														
			SD-03 Product Data															
			Accessories	2.2														
			Galvanizing Repair Paint	2.1.3.1														
			Galvanizing Repair Paint	2.1.6														
			Joint Sealant Material	2.1.5														
			Mechanical Fasteners	2.2.11														
			Powder-Actuated Tool Operator	1.3.1														

SUBMITTAL REGISTER

CONTRACT NO.
1393229

TITLE AND LOCATION
P1396B SOF INTEL OPS EXPANSION - PHASE II

CONTRACTOR

ACTIVITY NO	TRANSMITTAL NO	SPEC SECT	DESCRIPTION ITEM SUBMITTED	PARAGRAPH #	CLASSIFICATION	GOVT OR A/E REVWR	CONTRACTOR: SCHEDULE DATES			CONTRACTOR ACTION			APPROVING AUTHORITY					
							SUBMIT	APPROVAL NEEDED BY	MATERIAL NEEDED BY	ACTION CODE	DATE OF ACTION	DATE FWD TO APPR AUTH/ DATE RCD FROM CONTR	DATE FWD TO OTHER REVIEWER	DATE RCD FROM OTH REVIEWER	ACTION CODE	DATE OF ACTION	MAILED TO CONTR/ DATE RCD FRM APPR AUTH	REMARKS
(a)	(b)	(c)	(d)	(e)	(f)		(g)	(h)	(i)	(j)	(k)	(l)	(m)	(n)	(o)	(p)	(q)	(r)
		05 30 00	Repair Paint	2.3.2														
			Welder Qualifications	1.3.2														
			Welding Equipment	1.3.2														
			Welding Rods and Accessories	1.3.2														
			SD-07 Certificates															
			Welding Procedures	1.3.2														
			Fire Safety	1.3.3.1														
			Wind Storm Resistance	1.3.3.2														
		05 40 00	SD-02 Shop Drawings															
			Framing Components	1.6.1	G													
			SD-03 Product Data															
			studs,joists	2.1														
			LEED Documentation	1.4	G													
			SD-07 Certificates															
			Load-bearing cold-formed metal	1.5														
			framing															
			Welds	3.1.1														
			LEED Documentation	1.4	G													
		05 50 13	SD-02 Shop Drawings															
			Access doors and panels	2.3														
			Cover plates and frames	2.6														
			Expansion joint covers	2.7														
			SD-03 Product Data															
			Access doors and panels	2.3														
			Cover plates and frames	2.6														
			Control-joint covers	2.4														

SUBMITTAL REGISTER

CONTRACT NO.
1393229

TITLE AND LOCATION
P1396B SOF INTEL OPS EXPANSION - PHASE II

CONTRACTOR

ACTIVITY NO	TRANSMITTAL NO	SPEC SECT	DESCRIPTION ITEM SUBMITTED	PARAGRAPH #	CLASSIFICATION	GOVT OR A/E REVWR	CONTRACTOR: SCHEDULE DATES			CONTRACTOR ACTION			APPROVING AUTHORITY					
							SUBMIT	APPROVAL NEEDED BY	MATERIAL NEEDED BY	ACTION CODE	DATE OF ACTION	DATE FWD TO APPR AUTH/ DATE RCD FROM CONTR	DATE FWD TO OTHER REVIEWER	DATE RCD FROM OTH REVIEWER	ACTION CODE	DATE OF ACTION	MAILED TO CONTR/ DATE RCD FRM APPR AUTH	REMARKS
(a)	(b)	(c)	(d)	(e)	(f)		(g)	(h)	(i)	(j)	(k)	(l)	(m)	(n)	(o)	(p)	(q)	(r)
		05 50 13	Expansion joint covers	2.7														
		06 10 00	SD-02 Shop Drawings															
			Fabricated structural members	1.9.1	G													
			Modifications of structural	1.9.2	G													
			members															
			SD-03 Product Data															
			Local/Regional Materials	1.11.1														
			Salvaged Lumber	2.1.2														
			Recovered Lumber	2.1.3														
			Plastic Lumber	2.1.4														
			Fire-retardant treatment	1.8														
			Structural-use and OSB panels	1.4.3														
			Oriented Strand Board	2.3														
			Adhesives	2.4.2														
			SD-05 Design Data															
			Modifications of structural	1.9.2	G													
			members															
			SD-06 Test Reports															
			Preservative-treated	1.4.4														
			SD-07 Certificates															
			Forest Stewardship Council	1.11.2														
			(FSC) Certification															
			Certificates of grade	1.9.3														
			Preservative treatment	1.7														
			SD-10 Operation and Maintenance															
			Data															

SUBMITTAL REGISTER

CONTRACT NO. 1393229

TITLE AND LOCATION: P1396B SOF INTEL OPS EXPANSION - PHASE II

CONTRACTOR

ACTIVITY NO	TRANSMITTAL NO	SPEC SECT	DESCRIPTION ITEM SUBMITTED	PARAGRAPH #	CLASSIFICATION	GOVT OR A/E REVWR	CONTRACTOR: SCHEDULE DATES			CONTRACTOR ACTION			APPROVING AUTHORITY					
							SUBMIT	APPROVAL NEEDED BY	MATERIAL NEEDED BY	ACTION CODE	DATE OF ACTION	DATE FWD TO APPR AUTH/ DATE RCD FROM CONTR	DATE FWD TO OTHER REVIEWER	DATE RCD FROM OTH REVIEWER	ACTION CODE	DATE OF ACTION	MAILED TO CONTR/ DATE RCD FRM APPR AUTH	REMARKS
(a)	(b)	(c)	(d)	(e)	(f)		(g)	(h)	(i)	(j)	(k)	(l)	(m)	(n)	(o)	(p)	(q)	(r)
		06 10 00	Plastic	1.4.7														
			SD-11 Closeout Submittals															
			Local/Regional Materials	1.11.1														
			Plastic Lumber	2.1.4														
			Adhesives	2.4.2														
			Oriented Strand Board	2.3														
			Structural-use and OSB Panels	1.4.3														
			Certified Wood	1.11.2														
		06 20 00	SD-04 Samples															
			Moldings	3.1	G ID													
			SD-07 Certificates															
			Certificates of grade	1.4														
			Certificates of compliance	1.4														
		06 41 16.00 10	SD-02 Shop Drawings															
			Shop Drawings	2.9	G ID													
			Installation	3.1														
			SD-03 Product Data															
			Wood Materials	2.1	G													
			Certification	1.5.2														
			SD-04 Samples															
			Plastic Laminates	2.3	G ID													
			Cabinet Hardware	2.5	G ID													
			SD-07 Certificates															
			Quality Assurance	1.5														
			Laminate Clad Casework	3.1														
			SD-11 Closeout Submittals															

SUBMITTAL REGISTER

CONTRACT NO.
1393229

TITLE AND LOCATION
P1396B SOF INTEL OPS EXPANSION - PHASE II

CONTRACTOR

ACTIVITY NO	TRANSMITTAL NO	SPEC SECT	DESCRIPTION ITEM SUBMITTED	PARAGRAPH #	CLASSIFICATION	GOVT OR A/E REVWR	CONTRACTOR: SCHEDULE DATES			CONTRACTOR ACTION			APPROVING AUTHORITY					
							SUBMIT	APPROVAL NEEDED BY	MATERIAL NEEDED BY	ACTION CODE	DATE OF ACTION	DATE FWD TO APPR AUTH/ DATE RCD FROM CONTR	DATE FWD TO OTHER REVIEWER	DATE RCD FROM OTH REVIEWER	ACTION CODE	DATE OF ACTION	MAILED TO CONTR/ DATE RCD FRM APPR AUTH	REMARKS
(a)	(b)	(c)	(d)	(e)	(f)		(g)	(h)	(i)	(j)	(k)	(l)	(m)	(n)	(o)	(p)	(q)	(r)
		06 41 16.00 10	LEED Documentation	1.3														
		06 61 16	SD-02 Shop Drawings															
			Detail Drawings	1.5.2	G ID													
			Installation	3.1	G													
			SD-03 Product Data															
			Solid polymer material	2.1														
			Qualifications	1.5.1														
			Fabrications	2.3														
			SD-04 Samples															
			Material	2.1	G ID													
			SD-06 Test Reports															
			Solid polymer material	2.1														
			SD-07 Certificates															
			Fabrications	2.3														
			Qualifications	1.5.1														
			SD-10 Operation and Maintenance															
			Data															
			Clean-up	3.2														
			SD-11 Closeout Submittals															
			LEED Documentation	1.3.1														
		07 11 13	SD-07 Certificates															
			Materials	1.3														
		07 13 53	SD-03 Product Data															
			Elastomeric waterproofing sheet	2.1														
			material															
			Protection board	2.4														

SUBMITTAL REGISTER

CONTRACT NO.
1393229

TITLE AND LOCATION
P1396B SOF INTEL OPS EXPANSION - PHASE II

CONTRACTOR

ACTIVITY NO	TRANSMITTAL NO	SPEC SECT	DESCRIPTION ITEM SUBMITTED	PARAGRAPH #	CLASSIFICATION	GOVT OR A/E REVWR	CONTRACTOR: SCHEDULE DATES			CONTRACTOR ACTION			APPROVING AUTHORITY					
							SUBMIT	APPROVAL NEEDED BY	MATERIAL NEEDED BY	ACTION CODE	DATE OF ACTION	DATE FWD TO APPR AUTH/ DATE RCD FROM CONTR	DATE FWD TO OTHER REVIEWER	DATE RCD FROM OTH REVIEWER	ACTION CODE	DATE OF ACTION	MAILED TO CONTR/ DATE RCD FRM APPR AUTH	REMARKS
(a)	(b)	(c)	(d)	(e)	(f)		(g)	(h)	(i)	(j)	(k)	(l)	(m)	(n)	(o)	(p)	(q)	(r)
		07 13 53	Primers, adhesives, and mastics	2.1														
			SD-04 Samples															
			Materials	2.1														
			SD-06 Test Reports															
			Elastomeric waterproofing sheet	2.1														
			material															
			Field Quality Control	3.6														
			Verification Of Conditions	3.1														
			Protective Covering	3.7														
			SD-08 Manufacturer’s Instructions															
			Primers, adhesives, and mastics	2.1														
		07 15 00.00 22	SD-02 Shop Drawings															
			Shop Drawings	2.1														
			SD-03 Product Data															
			Accessory materials	2.4														
			Water Resistant Self-Adhering Air	2.2	G													
			Barrier Membrane															
			Water Resistant Self-Adhering Air	2.2	G													
			Barrier Membrane															
			Water Resistant Self-Adhering Air	3.4.2	G													
			Barrier Membrane															
			Air Barrier	2.3	G													
			SD-04 Samples															
			Mock-Up	1.7.3														
			Water Resistant Self-Adhering Air	2.2														
			Barrier Membrane															

SUBMITTAL REGISTER

CONTRACT NO.
1393229

TITLE AND LOCATION
P1396B SOF INTEL OPS EXPANSION - PHASE II

CONTRACTOR

ACTIVITY NO	TRANSMITTAL NO	SPEC SECT	DESCRIPTION ITEM SUBMITTED	PARAGRAPH #	CLASSIFICATION	GOVT OR A/E REVWR	CONTRACTOR: SCHEDULE DATES			CONTRACTOR ACTION			APPROVING AUTHORITY					
							SUBMIT	APPROVAL NEEDED BY	MATERIAL NEEDED BY	ACTION CODE	DATE OF ACTION	DATE FWD TO APPR AUTH/ DATE RCD FROM CONTR	DATE FWD TO OTHER REVIEWER	DATE RCD FROM OTH REVIEWER	ACTION CODE	DATE OF ACTION	MAILED TO CONTR/ DATE RCD FRM APPR AUTH	REMARKS
(a)	(b)	(c)	(d)	(e)	(f)		(g)	(h)	(i)	(j)	(k)	(l)	(m)	(n)	(o)	(p)	(q)	(r)
		07 15 00.00 22	Water Resistant Self-Adhering Air	2.2														
			Barrier Membrane															
			Water Resistant Self-Adhering Air	3.4.2														
			Barrier Membrane															
			SD-05 Design Data															
			Design Data	2.1														
			SD-06 Test Reports															
			Test Reports	1.7.4.4	G													
			Test Reports	1.7.4.4	G													
			Whole Building Air Leakage Test	1.7.4.3	G													
			Whole Building Air Leakage Test	1.7.4.4	G													
			Whole Building Air Leakage Test	3.8.1	G													
			Thermography Test	1.7.4.3	G													
			Thermography Test	1.7.4.4	G													
			Thermography Test	3.8.2	G													
			Bond Adhesion Strength Test	1.7.4.4	G													
			Bond Adhesion Strength Test	3.8.3	G													
			SD-07 Certificates															
			Manufacturer's certification of	2.1	G													
			materials compatibility															
			Inspector Qualifications	1.7.2.1	G													
			Whole Building Air Leakage Test	1.7.4.1	G													
			Technician Qualifications															
			Thermography Technician	1.7.4.2	G													
			Qualifications															
			Test Procedures	1.7.4.3	G													

SUBMITTAL REGISTER

CONTRACT NO.
1393229

TITLE AND LOCATION
P1396B SOF INTEL OPS EXPANSION - PHASE II

CONTRACTOR

ACTIVITY NO	TRANSMITTAL NO	SPEC SECT	DESCRIPTION ITEM SUBMITTED	PARAGRAPH #	CLASSIFICATION	GOVT OR A/E REVWR	CONTRACTOR: SCHEDULE DATES			CONTRACTOR ACTION			APPROVING AUTHORITY					
							SUBMIT	APPROVAL NEEDED BY	MATERIAL NEEDED BY	ACTION CODE	DATE OF ACTION	DATE FWD TO APPR AUTH/ DATE RCD FROM CONTR	DATE FWD TO OTHER REVIEWER	DATE RCD FROM OTH REVIEWER	ACTION CODE	DATE OF ACTION	MAILED TO CONTR/ DATE RCD FRM APPR AUTH	REMARKS
(a)	(b)	(c)	(d)	(e)	(f)		(g)	(h)	(i)	(j)	(k)	(l)	(m)	(n)	(o)	(p)	(q)	(r)
		07 15 00.00 22	Test Procedures	1.7.4.3	G													
			Test Procedures	1.7.4.3	G													
			Test Procedures	1.7.4.3	G													
			SD-08 Manufacturer’s Instructions															
			Manufacturer's instructions	2.1	G													
			Material safety data sheets	2.1														
			(MSDS)															
		07 21 13	SD-03 Product Data															
			Block or board insulation	2.1	G													
			Vapor retarder	2.2														
			Pressure sensitive tape	2.3														
			Accessories	2.4														
			SD-08 Manufacturer’s Instructions															
			Block or Board Insulation	2.1														
			Adhesive	2.4.1														
		07 21 16	SD-03 Product Data															
			Blanket insulation	2.1														
			Sill sealer insulation	2.2														
			Pressure sensitive tape	2.4														
			Accessories	2.5														
			SD-08 Manufacturer’s Instructions															
			Insulation	3.3.1														
		07 42 13	SD-01 Preconstruction Submittals															
			Qualification of Manufacturer	1.5.3	G													
			Qualification of Installation	1.5.4	G													
			Contractor															

SUBMITTAL REGISTER

CONTRACT NO.
1393229

TITLE AND LOCATION
P1396B SOF INTEL OPS EXPANSION - PHASE II

CONTRACTOR

ACTIVITY NO	TRANSMITTAL NO	SPEC SECT	DESCRIPTION ITEM SUBMITTED	PARAGRAPH #	CLASSIFICATION	GOVT OR A/E REVWR	CONTRACTOR: SCHEDULE DATES			CONTRACTOR ACTION			APPROVING AUTHORITY					
							SUBMIT	APPROVAL NEEDED BY	MATERIAL NEEDED BY	ACTION CODE	DATE OF ACTION	DATE FWD TO APPR AUTH/ DATE RCD FROM CONTR	DATE FWD TO OTHER REVIEWER	DATE RCD FROM OTH REVIEWER	ACTION CODE	DATE OF ACTION	MAILED TO CONTR/ DATE RCD FRM APPR AUTH	REMARKS
(a)	(b)	(c)	(d)	(e)	(f)		(g)	(h)	(i)	(j)	(k)	(l)	(m)	(n)	(o)	(p)	(q)	(r)
		07 42 13	Warranty	1.8	G													
			SD-02 Shop Drawings															
			Installation Drawings	1.5.1.1	G													
			SD-03 Product Data															
			Recycled Content	1.5.6.1														
			Recycled Content	2.1														
			Wall Panels	1.5.1	G													
			Factory Color Finish	2.1.1														
			Closure Materials	1.5.5														
			Pressure Sensitive Tape	2.4.4.4														
			Sealants and Caulking	2.4.4.1														
			Accessories	1.5.5														
			Accessories	2.4														
			SD-04 Samples															
			Wall Panels	1.5.1	G													
			Fasteners	1.5.3.1	G													
			Metal Closure Strips	2.4.3	G													
			Color chart	2.1.6	G													
			SD-05 Design Data															
			Wind load design analysis	1.5.1.2	G													
			SD-06 Test Reports															
			Leakage Tests	3.7.2	G													
			Wind Load Tests	1.3.2	G													
			Coating	2.1.7	G													
			Chalking	2.1.7	G													
			Seismic Tests	1.3.2	G													

SUBMITTAL REGISTER

CONTRACT NO.
1393229

TITLE AND LOCATION
P1396B SOF INTEL OPS EXPANSION - PHASE II

CONTRACTOR

ACTIVITY NO	TRANSMITTAL NO	SPEC SECT	DESCRIPTION ITEM SUBMITTED	PARAGRAPH #	CLASSIFICATION	GOVT OR A/E REVWR	CONTRACTOR: SCHEDULE DATES			CONTRACTOR ACTION			APPROVING AUTHORITY					
							SUBMIT	APPROVAL NEEDED BY	MATERIAL NEEDED BY	ACTION CODE	DATE OF ACTION	DATE FWD TO APPR AUTH/ DATE RCD FROM CONTR	DATE FWD TO OTHER REVIEWER	DATE RCD FROM OTH REVIEWER	ACTION CODE	DATE OF ACTION	MAILED TO CONTR/ DATE RCD FRM APPR AUTH	REMARKS
(a)	(b)	(c)	(d)	(e)	(f)		(g)	(h)	(i)	(j)	(k)	(l)	(m)	(n)	(o)	(p)	(q)	(r)
		07 42 13	SD-07 Certificates															
			LEED Documentation	1.5.6.1	G													
			Fasteners	1.5.3.1														
			SD-08 Manufacturer’s Instructions															
			Installation	3.3	G													
			SD-09 Manufacturer’s Field															
			Reports															
			Manufacturer's Field Reports	3.8.1	G													
			SD-11 Closeout Submittals															
			Warranty	1.8	G													
			Maintenance Instructions	1.5.6	G													
			20 year 'No Dollar Limit' warranty	1.8.1														
			for labor and material															
		07 60 00	SD-02 Shop Drawings															
			Covering on flat, sloped, or	3.1.21														
			curved surfaces															
			Gutters	3.1.17														
			Downspouts	3.1.18														
			Expansion joints	3.1.22														
			Gravel stops and fascias	3.1.15														
			Base flashing	3.1.11														
			Counterflashing	3.1.12														
			Flashing at roof penetrations	3.1.23														
			Reglets	3.1.13														
			Copings	3.1.26														
			Drip edge	3.1.16														

SUBMITTAL REGISTER

CONTRACT NO.
1393229

TITLE AND LOCATION
P1396B SOF INTEL OPS EXPANSION - PHASE II

CONTRACTOR

ACTIVITY NO	TRANSMITTAL NO	SPEC SECT	DESCRIPTION ITEM SUBMITTED	PARAGRAPH #	CLASSIFICATION	GOVT OR A/E REVWR	CONTRACTOR: SCHEDULE DATES			CONTRACTOR ACTION			APPROVING AUTHORITY					
							SUBMIT	APPROVAL NEEDED BY	MATERIAL NEEDED BY	ACTION CODE	DATE OF ACTION	DATE FWD TO APPR AUTH/ DATE RCD FROM CONTR	DATE FWD TO OTHER REVIEWER	DATE RCD FROM OTH REVIEWER	ACTION CODE	DATE OF ACTION	MAILED TO CONTR/ DATE RCD FRM APPR AUTH	REMARKS
(a)	(b)	(c)	(d)	(e)	(f)		(g)	(h)	(i)	(j)	(k)	(l)	(m)	(n)	(o)	(p)	(q)	(r)
		07 60 00	Open valley flashing	3.1.19														
			Eave flashing	3.1.20														
			SD-11 Closeout Submittals															
			Quality Control Plan	3.5														
		07 61 14.00 20	SD-02 Shop Drawings															
			Roofing	1.2.4	G													
			SD-03 Product Data															
			Roofing panels	2.1	G													
			Attachment clips	2.3														
			Closures	2.4.1														
			Accessories	2.4														
			Fasteners	2.4.2														
			Sealants	2.4.3														
			warranty	1.7	G													
			SD-04 Samples															
			panel	2.1														
			Accessories	2.4														
			Sealants	2.4.3														
			Intermediate Support	2.2														
			SD-05 Design Data															
			Design calculations	1.5														
			SD-06 Test Reports															
			Field Inspection	3.6														
			Structural performance	1.3.3														
			Finish	1.6.6														
			SD-07 Certificates															

SUBMITTAL REGISTER

CONTRACT NO.
1393229

TITLE AND LOCATION
P1396B SOF INTEL OPS EXPANSION - PHASE II

CONTRACTOR

ACTIVITY NO	TRANSMITTAL NO	SPEC SECT	DESCRIPTION ITEM SUBMITTED	PARAGRAPH #	CLASSIFICATION	GOVT OR A/E REVWR	CONTRACTOR: SCHEDULE DATES			CONTRACTOR ACTION			APPROVING AUTHORITY					
							SUBMIT	APPROVAL NEEDED BY	MATERIAL NEEDED BY	ACTION CODE	DATE OF ACTION	DATE FWD TO APPR AUTH/ DATE RCD FROM CONTR	DATE FWD TO OTHER REVIEWER	DATE RCD FROM OTH REVIEWER	ACTION CODE	DATE OF ACTION	MAILED TO CONTR/ DATE RCD FRM APPR AUTH	REMARKS
(a)	(b)	(c)	(d)	(e)	(f)		(g)	(h)	(i)	(j)	(k)	(l)	(m)	(n)	(o)	(p)	(q)	(r)
		07 61 14.00 20	Manufacturer's Technical	1.6.3														
			Representative															
			Installer's Qualifications	1.6.4														
			Coil stock	2.1														
			SD-08 Manufacturer’s Instructions															
			Installation	3.3														
			SD-11 Closeout Submittals															
			Information card	3.8														
		07 84 00	SD-02 Shop Drawings															
			Firestopping Materials	2.1	G													
			SD-06 Test Reports															
			Inspection	3.3														
			SD-07 Certificates															
			Firestopping Materials	2.1														
			Installer Qualifications	1.4.1														
		07 92 00	SD-03 Product Data															
			Sealants	2.1														
			Primers	2.2														
			Bond breakers	2.3														
			Backstops	2.4														
			LEED Documentation	1.5	G													
			SD-07 Certificates															
			Sealant	3.4.6														
		08 11 13	SD-02 Shop Drawings															
			Doors	2.1														
			Doors	2.1														

SUBMITTAL REGISTER

CONTRACT NO.
1393229

TITLE AND LOCATION
P1396B SOF INTEL OPS EXPANSION - PHASE II

CONTRACTOR

ACTIVITY NO	TRANSMITTAL NO	SPEC SECT	DESCRIPTION ITEM SUBMITTED	PARAGRAPH #	CLASSIFICATION	GOVT OR A/E REVWR	CONTRACTOR: SCHEDULE DATES			CONTRACTOR ACTION			APPROVING AUTHORITY					
							SUBMIT	APPROVAL NEEDED BY	MATERIAL NEEDED BY	ACTION CODE	DATE OF ACTION	DATE FWD TO APPR AUTH/ DATE RCD FROM CONTR	DATE FWD TO OTHER REVIEWER	DATE RCD FROM OTH REVIEWER	ACTION CODE	DATE OF ACTION	MAILED TO CONTR/ DATE RCD FRM APPR AUTH	REMARKS
(a)	(b)	(c)	(d)	(e)	(f)		(g)	(h)	(i)	(j)	(k)	(l)	(m)	(n)	(o)	(p)	(q)	(r)
		08 11 13	Frames	2.5														
			Frames	2.5														
			Accessories	2.3														
			Weatherstripping	2.7														
			SD-03 Product Data															
			Doors	2.1	G													
			Frames	2.5	G													
			Accessories	2.3														
			Weatherstripping	2.7														
		08 14 00	SD-02 Shop Drawings															
			Doors	2.1	G													
			SD-03 Product Data															
			Doors	2.1	G													
			Accessories	2.2														
			Water-resistant sealer	2.3.7														
			warranty	1.5														
			Sound transmission class rating	2.1.2	G													
			Local/Regional Materials	1.3														
			SD-04 Samples															
			Doors	2.1														
			Door finish colors	2.3.6.4	G													
			SD-06 Test Reports															
			Cycle-slam	2.4														
			Hinge loading resistance	2.4														
		08 34 73	SD-02 Shop Drawings															

SUBMITTAL REGISTER

CONTRACT NO.
1393229

TITLE AND LOCATION
P1396B SOF INTEL OPS EXPANSION - PHASE II

CONTRACTOR

ACTIVITY NO	TRANSMITTAL NO	SPEC SECT	DESCRIPTION ITEM SUBMITTED	PARAGRAPH #	CLASSIFICATION	GOVT OR A/E REVWR	CONTRACTOR: SCHEDULE DATES			CONTRACTOR ACTION			APPROVING AUTHORITY					
							SUBMIT	APPROVAL NEEDED BY	MATERIAL NEEDED BY	ACTION CODE	DATE OF ACTION	DATE FWD TO APPR AUTH/ DATE RCD FROM CONTR	DATE FWD TO OTHER REVIEWER	DATE RCD FROM OTH REVIEWER	ACTION CODE	DATE OF ACTION	MAILED TO CONTR/ DATE RCD FRM APPR AUTH	REMARKS
(a)	(b)	(c)	(d)	(e)	(f)		(g)	(h)	(i)	(j)	(k)	(l)	(m)	(n)	(o)	(p)	(q)	(r)
		08 34 73	Hollow Metal Sound Retardant	2.1	G													
			Doors															
			Hollow Metal Sound Retardant	2.2.1	G													
			Doors															
			Wood Sound Retardant Swinging	2.1.1.1	G													
			Doors															
			Door Frames	2.1	G													
			SD-03 Product Data															
			Hollow Metal Sound Retardant	2.1	G													
			Doors															
			Hollow Metal Sound Retardant	2.2.1	G													
			Doors															
			Wood Sound Retardant Swinging	2.1.1.1	G													
			Doors															
			Door Frames	2.1	G													
			Door Hardware	2.1	G													
			Seals and Gasketing	2.3.5	G													
			Thresholds	2.1	G													
			Astragals	2.1	G													
			SD-06 Test Reports															
			Wind Loading Tests	2.4.1	G													
			Water Leakage Tests	2.4.1	G													
			Acoustical Tests	2.4.1	G													
			Air Infiltration Tests	2.4.1	G													
			SD-07 Certificates															

SUBMITTAL REGISTER

CONTRACT NO.
1393229

TITLE AND LOCATION
P1396B SOF INTEL OPS EXPANSION - PHASE II

CONTRACTOR

ACTIVITY NO	TRANSMITTAL NO	SPEC SECT	DESCRIPTION ITEM SUBMITTED	PARAGRAPH #	CLASSIFICATION	GOVT OR A/E REVWR	CONTRACTOR: SCHEDULE DATES			CONTRACTOR ACTION			APPROVING AUTHORITY					
							SUBMIT	APPROVAL NEEDED BY	MATERIAL NEEDED BY	ACTION CODE	DATE OF ACTION	DATE FWD TO APPR AUTH/ DATE RCD FROM CONTR	DATE FWD TO OTHER REVIEWER	DATE RCD FROM OTH REVIEWER	ACTION CODE	DATE OF ACTION	MAILED TO CONTR/ DATE RCD FRM APPR AUTH	REMARKS
(a)	(b)	(c)	(d)	(e)	(f)		(g)	(h)	(i)	(j)	(k)	(l)	(m)	(n)	(o)	(p)	(q)	(r)
		08 34 73	Hollow Metal Sound Retardant	2.1	G													
			Doors															
			Hollow Metal Sound Retardant	2.2.1	G													
			Doors															
			Wood Sound Retardant Doors	2.1	G													
			Door Frames	2.1	G													
			Door Hardware	2.1	G													
		08 45 23.00 22	SD-01 Preconstruction Submittals															
			Qualification of Manufacturer	1.4.3	G													
			Qualification of Installation	1.4.4	G													
			Contractor															
			Warranty	1.7	G													
			SD-02 Shop Drawings															
			Installation Drawings	1.4.1.1	G													
			Installation Drawings	1.4.1.2.1	G													
			SD-03 Product Data															
			Local/Regional Materials	1.8.2	G													
			LEED Documentation	1.8.1	G													
			Sandwich Panel	2.1	G													
			Closure Materials	1.4.5														
			Accessories	1.4.5														
			SD-04 Samples															
			Sandwich Panel	2.1	G													
			Fasteners	2.3	G													
			Color charts and chips	1.4.1	G													
			Color charts and chips	1.4.1	G													

SUBMITTAL REGISTER

CONTRACT NO.
1393229

TITLE AND LOCATION
P1396B SOF INTEL OPS EXPANSION - PHASE II

CONTRACTOR

ACTIVITY NO	TRANSMITTAL NO	SPEC SECT	DESCRIPTION ITEM SUBMITTED	PARAGRAPH #	CLASSIFICATION	GOVT OR A/E REVWR	CONTRACTOR: SCHEDULE DATES			CONTRACTOR ACTION			APPROVING AUTHORITY					
							SUBMIT	APPROVAL NEEDED BY	MATERIAL NEEDED BY	ACTION CODE	DATE OF ACTION	DATE FWD TO APPR AUTH/ DATE RCD FROM CONTR	DATE FWD TO OTHER REVIEWER	DATE RCD FROM OTH REVIEWER	ACTION CODE	DATE OF ACTION	MAILED TO CONTR/ DATE RCD FRM APPR AUTH	REMARKS
(a)	(b)	(c)	(d)	(e)	(f)		(g)	(h)	(i)	(j)	(k)	(l)	(m)	(n)	(o)	(p)	(q)	(r)
		08 45 23.00 22	SD-05 Design Data															
			Wind Design Analysis	1.4.1.2	G													
			Blast Design Analysis	1.4.1.2.1	G													
			SD-07 Certificates															
			LEED Documentation	1.8.1	G													
			Fasteners	2.3	G													
			SD-08 Manufacturer’s Instructions															
			Installation	3.3	G													
			SD-09 Manufacturer’s Field															
			Reports															
			Manufacturer's Field Reports	3.4.1	G													
			SD-11 Closeout Submittals															
			Local/Regional Materials	1.8.2														
			Warranty	1.7	G													
			Maintenance Instructions	1.4.6	G													
		08 71 00	SD-02 Shop Drawings															
			Hardware schedule	1.3	G													
			Keying system	2.3.9														
			SD-03 Product Data															
			Hardware items	2.3	G													
			SD-08 Manufacturer’s Instructions															
			Installation	3.1														
			SD-10 Operation and Maintenance															
			Data															
			Hardware Schedule	1.3														
			SD-11 Closeout Submittals															

SUBMITTAL REGISTER

CONTRACT NO. 1393229

TITLE AND LOCATION: P1396B SOF INTEL OPS EXPANSION - PHASE II

CONTRACTOR

ACTIVITY NO	TRANSMITTAL NO	SPEC SECT	DESCRIPTION ITEM SUBMITTED	PARAGRAPH #	CLASSIFICATION	GOVT OR A/E REVWR	CONTRACTOR: SCHEDULE DATES			CONTRACTOR ACTION			APPROVING AUTHORITY					
							SUBMIT	APPROVAL NEEDED BY	MATERIAL NEEDED BY	ACTION CODE	DATE OF ACTION	DATE FWD TO APPR AUTH/ DATE RCD FROM CONTR	DATE FWD TO OTHER REVIEWER	DATE RCD FROM OTH REVIEWER	ACTION CODE	DATE OF ACTION	MAILED TO CONTR/ DATE RCD FRM APPR AUTH	REMARKS
(a)	(b)	(c)	(d)	(e)	(f)		(g)	(h)	(i)	(j)	(k)	(l)	(m)	(n)	(o)	(p)	(q)	(r)
		08 71 00	Key Bitting	1.4														
		08 81 00	SD-02 Shop Drawings															
			Installation	3.3.1														
			SD-03 Product Data															
			Insulating Glass	1.8.1	G													
			Glazing Accessories	1.4														
			Local/Regional Materials	1.7.1														
			SD-04 Samples															
			Insulating Glass	1.8.1														
			Tape	2.3.4														
			Sealant	2.3.1.1														
			SD-07 Certificates															
			Insulating Glass	1.8.1														
			SD-08 Manufacturer’s Instructions															
			Setting and sealing materials	2.3														
			Glass setting	3.2														
			SD-11 Closeout Submittals															
			Local/Regional Materials	1.7.1														
		08 91 00	SD-02 Shop Drawings															
			Wall louvers	1.4														
			Wall louvers	1.5														
			SD-03 Product Data															
			Metal Wall Louvers	2.2														
			SD-04 Samples															
			Wall louvers	1.4														
			Wall louvers	1.5														

SUBMITTAL REGISTER

CONTRACT NO.
1393229

TITLE AND LOCATION
P1396B SOF INTEL OPS EXPANSION - PHASE II

CONTRACTOR

ACTIVITY NO	TRANSMITTAL NO	SPEC SECT	DESCRIPTION ITEM SUBMITTED	PARAGRAPH #	CLASSIFICATION	GOVT OR A/E REVWR	CONTRACTOR: SCHEDULE DATES			CONTRACTOR ACTION			APPROVING AUTHORITY					
							SUBMIT	APPROVAL NEEDED BY	MATERIAL NEEDED BY	ACTION CODE	DATE OF ACTION	DATE FWD TO APPR AUTH/ DATE RCD FROM CONTR	DATE FWD TO OTHER REVIEWER	DATE RCD FROM OTH REVIEWER	ACTION CODE	DATE OF ACTION	MAILED TO CONTR/ DATE RCD FRM APPR AUTH	REMARKS
(a)	(b)	(c)	(d)	(e)	(f)		(g)	(h)	(i)	(j)	(k)	(l)	(m)	(n)	(o)	(p)	(q)	(r)
		08 91 00	Door louvers	1.5														
			Door louvers	2.3														
		09 22 00	SD-02 Shop Drawings															
			Metal support systems	2.1	G													
		09 29 00	SD-03 Product Data															
			Cementitious backer units	2.1.6														
			Glass Mat Water-Resistant	2.1.4														
			Gypsum Tile Backing Board															
			Water-Resistant Gypsum	2.1.3														
			Backing Board															
			Glass Mat Covered or Reinforced	2.1.5														
			Gypsum Sheathing															
			Glass Mat Covered or Reinforced	2.1.5.1														
			Gypsum Sheathing Sealant															
			Accessories	2.1.10														
			Gypsum Board	2.1.1														
			Adhesives	2.1.9														
			Joint Treatment Materials	2.1.7														
			Local/Regional Materials	1.5.1														
			Environmental Data	1.5.2														
			SD-07 Certificates															
			Asbestos Free Materials	2.1	G													
			SD-08 Manufacturer’s Instructions															
			Material Safety Data Sheets	2.1														
			SD-10 Operation and Maintenance															
			Data															

SUBMITTAL REGISTER

CONTRACT NO.
1393229

TITLE AND LOCATION
P1396B SOF INTEL OPS EXPANSION - PHASE II

CONTRACTOR

ACTIVITY NO	TRANSMITTAL NO	SPEC SECT	DESCRIPTION ITEM SUBMITTED	PARAGRAPH #	CLASSIFICATION	GOVT OR A/E REVWR	CONTRACTOR: SCHEDULE DATES			CONTRACTOR ACTION			APPROVING AUTHORITY					
							SUBMIT	APPROVAL NEEDED BY	MATERIAL NEEDED BY	ACTION CODE	DATE OF ACTION	DATE FWD TO APPR AUTH/ DATE RCD FROM CONTR	DATE FWD TO OTHER REVIEWER	DATE RCD FROM OTH REVIEWER	ACTION CODE	DATE OF ACTION	MAILED TO CONTR/ DATE RCD FRM APPR AUTH	REMARKS
(a)	(b)	(c)	(d)	(e)	(f)		(g)	(h)	(i)	(j)	(k)	(l)	(m)	(n)	(o)	(p)	(q)	(r)
		09 29 00	Manufacturer maintenance	2.1														
			instructions															
			Waste Management	3.9														
			SD-11 Closeout Submittals															
			Local/Regional Materials	1.5.1														
			Gypsum Board	2.1.1														
			Adhesives	2.1.9														
		09 30 13	SD-02 Shop Drawings															
			Detail Drawings	3.2	G ID													
			SD-03 Product Data															
			Local/Regional Materials	1.4.1														
			Tile	2.1	G ID													
			Setting-Bed	2.2	G													
			Mortar, Grout, and Adhesive	2.4	G ID													
			SD-04 Samples															
			Tile	2.1	G ID													
			Transition Strips	2.1	G ID													
			Transition Strips	2.5	G ID													
			Grout	2.4	G ID													
			SD-07 Certificates															
			Tile	2.1														
			Mortar, Grout, and Adhesive	2.4														
			SD-08 Manufacturer’s Instructions															
			Maintenance Instructions	3.7														
			SD-10 Operation and Maintenance															
			Data															

SUBMITTAL REGISTER

CONTRACT NO.
1393229

TITLE AND LOCATION
P1396B SOF INTEL OPS EXPANSION - PHASE II

CONTRACTOR

ACTIVITY NO	TRANSMITTAL NO	SPEC SECT	DESCRIPTION ITEM SUBMITTED	PARAGRAPH #	CLASSIFICATION	GOVT OR A/E REVWR	CONTRACTOR: SCHEDULE DATES			CONTRACTOR ACTION			APPROVING AUTHORITY					
							SUBMIT	APPROVAL NEEDED BY	MATERIAL NEEDED BY	ACTION CODE	DATE OF ACTION	DATE FWD TO APPR AUTH/ DATE RCD FROM CONTR	DATE FWD TO OTHER REVIEWER	DATE RCD FROM OTH REVIEWER	ACTION CODE	DATE OF ACTION	MAILED TO CONTR/ DATE RCD FRM APPR AUTH	REMARKS
(a)	(b)	(c)	(d)	(e)	(f)		(g)	(h)	(i)	(j)	(k)	(l)	(m)	(n)	(o)	(p)	(q)	(r)
		09 30 13	Installation	3.2	G													
			SD-11 Closeout Submittals															
			Local/Regional Materials	1.4.1														
			LEED Documentation	1.2														
			Tile	2.1														
			Adhesives	2.4														
		09 51 00	SD-02 Shop Drawings															
			Approved Detail Drawings	1.2														
			SD-03 Product Data															
			Acoustical Ceiling Systems	1.2.4														
			Suspension System	2.2	G	ID												
			Acoustical Clouds Suspended	2.1.4	G	ID												
			Ceiling System															
			SD-04 Samples															
			Acoustical Units	2.1	G	ID												
			Acoustic Ceiling Tiles	2.1.1														
			SD-06 Test Reports															
			Ceiling Attenuation Class and	1.2.1														
			Test															
			SD-07 Certificates															
			Acoustical Units	2.1														
			Acoustic Ceiling Tiles	2.1.1														
		09 65 00	SD-02 Shop Drawings															
			Resilient Flooring and	2.8	G	ID												
			Accessories															
			SD-03 Product Data															

SUBMITTAL REGISTER

CONTRACT NO. 1393229

TITLE AND LOCATION: P1396B SOF INTEL OPS EXPANSION - PHASE II

CONTRACTOR

ACTIVITY NO	TRANSMITTAL NO	SPEC SECT	DESCRIPTION ITEM SUBMITTED	PARAGRAPH #	CLASSIFICATION	GOVT OR A/E REVWR	CONTRACTOR: SCHEDULE DATES			CONTRACTOR ACTION			APPROVING AUTHORITY					
							SUBMIT	APPROVAL NEEDED BY	MATERIAL NEEDED BY	ACTION CODE	DATE OF ACTION	DATE FWD TO APPR AUTH/ DATE RCD FROM CONTR	DATE FWD TO OTHER REVIEWER	DATE RCD FROM OTH REVIEWER	ACTION CODE	DATE OF ACTION	MAILED TO CONTR/ DATE RCD FRM APPR AUTH	REMARKS
(a)	(b)	(c)	(d)	(e)	(f)		(g)	(h)	(i)	(j)	(k)	(l)	(m)	(n)	(o)	(p)	(q)	(r)
		09 65 00	Resilient Flooring and	2.8	G	ID												
			Accessories															
			Adhesives	2.4														
			Luxury Vinyl Tile	2.1														
			Wall Base	2.2														
			Local/Regional Materials	1.2.2														
			SD-04 Samples															
			Resilient Flooring and	2.8	G	ID												
			Accessories															
			SD-06 Test Reports															
			Moisture, Alkalinity and Bond	3.3	G													
			Tests															
			SD-08 Manufacturer’s Instructions															
			Surface Preparation	3.2	G													
			Installation	3.1	G													
			SD-10 Operation and Maintenance															
			Data															
			Resilient Flooring and	2.8	G													
			Accessories															
			SD-11 Closeout Submittals															
			LEED Documentation	1.3	G													
		09 68 00	SD-02 Shop Drawings															
			Installation Drawings	3.4	G	ID												
			Transitions	2.5	G	ID												
			SD-03 Product Data															
			Carpet	2.1	G	ID												

SUBMITTAL REGISTER

CONTRACT NO.
1393229

TITLE AND LOCATION
P1396B SOF INTEL OPS EXPANSION - PHASE II

CONTRACTOR

ACTIVITY NO	TRANSMITTAL NO	SPEC SECT	DESCRIPTION ITEM SUBMITTED	PARAGRAPH #	CLASSIFICATION	GOVT OR A/E REVWR	CONTRACTOR: SCHEDULE DATES			CONTRACTOR ACTION			APPROVING AUTHORITY					
							SUBMIT	APPROVAL NEEDED BY	MATERIAL NEEDED BY	ACTION CODE	DATE OF ACTION	DATE FWD TO APPR AUTH/ DATE RCD FROM CONTR	DATE FWD TO OTHER REVIEWER	DATE RCD FROM OTH REVIEWER	ACTION CODE	DATE OF ACTION	MAILED TO CONTR/ DATE RCD FRM APPR AUTH	REMARKS
(a)	(b)	(c)	(d)	(e)	(f)		(g)	(h)	(i)	(j)	(k)	(l)	(m)	(n)	(o)	(p)	(q)	(r)
		09 68 00	Carpet Cushion	2.3	G	ID												
			Transitions	2.5	G	ID												
			Physical Characteristics	2.1.1														
			Local/Regional Materials	1.2.1														
			Environmental Data	1.2.2														
			SD-04 Samples															
			Carpet	2.1	G	ID												
			Transitions	2.5	G	ID												
			Carpet Cushion	2.3	G	ID												
			SD-06 Test Reports															
			Moisture and Alkalinity Tests	3.2	G													
			SD-07 Certificates															
			Carpet	2.1														
			Regulatory Requirements	1.5														
			SD-08 Manufacturer's Instructions															
			Surface Preparation	3.1														
			Installation	3.4														
			SD-10 Operation and Maintenance															
			Data															
			Carpet	2.1	G													
			Cleaning and Protection	3.5	G													
			Maintenance Service	3.7.2														
			SD-11 Closeout Submittals															
			LEED Documentation	1.3	G													
			Local/Regional Materials	1.2.1	G													
		09 90 00	SD-02 Shop Drawings															

SUBMITTAL REGISTER

CONTRACT NO. 1393229

TITLE AND LOCATION: P1396B SOF INTEL OPS EXPANSION - PHASE II

CONTRACTOR

ACTIVITY NO	TRANSMITTAL NO	SPEC SECT	DESCRIPTION ITEM SUBMITTED	PARAGRAPH #	CLASSIFICATION	GOVT OR A/E REVWR	CONTRACTOR: SCHEDULE DATES			CONTRACTOR ACTION			APPROVING AUTHORITY					
							SUBMIT	APPROVAL NEEDED BY	MATERIAL NEEDED BY	ACTION CODE	DATE OF ACTION	DATE FWD TO APPR AUTH/ DATE RCD FROM CONTR	DATE FWD TO OTHER REVIEWER	DATE RCD FROM OTH REVIEWER	ACTION CODE	DATE OF ACTION	MAILED TO CONTR/ DATE RCD FRM APPR AUTH	REMARKS
(a)	(b)	(c)	(d)	(e)	(f)		(g)	(h)	(i)	(j)	(k)	(l)	(m)	(n)	(o)	(p)	(q)	(r)
		09 90 00	Piping identification	3.10														
			stencil	3.10														
			SD-03 Product Data															
			Local/Regional Materials	1.9.1														
			Environmental Data	1.9.2														
			Materials	2.1														
			Coating	2.1														
			Manufacturer's Technical Data	2.1														
			Sheets															
			SD-04 Samples															
			Paint Drawdowns	3.13	G													
			SD-07 Certificates															
			Applicator's qualifications	1.3														
			Qualification Testing	1.4.1.2														
			SD-08 Manufacturer’s Instructions															
			Mixing	3.6.2														
			Manufacturer's Material Safety	1.7.2														
			Data Sheets															
			SD-10 Operation and Maintenance															
			Data															
			Coatings	2.1														
		10 10 00	SD-03 Product Data															
			Visual Display Board	1.2	G	ID												
			SD-04 Samples															
			Porcelain Enamel	2.1.1	G	ID												
			Materials	2.1	G	ID												

SUBMITTAL REGISTER

CONTRACT NO.
1393229

TITLE AND LOCATION
P1396B SOF INTEL OPS EXPANSION - PHASE II

CONTRACTOR

ACTIVITY NO	TRANSMITTAL NO	SPEC SECT	DESCRIPTION ITEM SUBMITTED	PARAGRAPH #	CLASSIFICATION	GOVT OR A/E REVWR	CONTRACTOR: SCHEDULE DATES			CONTRACTOR ACTION			APPROVING AUTHORITY					
							SUBMIT	APPROVAL NEEDED BY	MATERIAL NEEDED BY	ACTION CODE	DATE OF ACTION	DATE FWD TO APPR AUTH/ DATE RCD FROM CONTR	DATE FWD TO OTHER REVIEWER	DATE RCD FROM OTH REVIEWER	ACTION CODE	DATE OF ACTION	MAILED TO CONTR/ DATE RCD FRM APPR AUTH	REMARKS
(a)	(b)	(c)	(d)	(e)	(f)		(g)	(h)	(i)	(j)	(k)	(l)	(m)	(n)	(o)	(p)	(q)	(r)
		10 10 00	SD-07 Certificates															
			Visual Display Board	1.2														
		10 14 00.20	SD-02 Shop Drawings															
			Detail Drawings	1.5.2	G	ID												
			SD-03 Product Data															
			Installation	3.1	G	ID												
			Warranty	1.7														
			SD-04 Samples															
			Interior Signage	1.5.1	G	ID												
			Software	1.4														
			SD-10 Operation and Maintenance															
			Data															
			Approved Manufacturer's	3.1														
			Instructions															
			Protection and Cleaning	3.1.2	G													
			SD-11 Closeout Submittals															
			LEED Documentation	1.2														
		10 14 01	SD-02 Shop Drawings															
			Approved Detail Drawings	3.1	G													
			SD-03 Product Data															
			Modular Exterior Signage System	2.1														
			Installation	3.1														
			Exterior Signage	1.2	G													
			Wind Load Requirements	1.2.1														
			SD-04 Samples															
			Exterior Signage	1.2	G													

SUBMITTAL REGISTER

CONTRACT NO.
1393229

TITLE AND LOCATION
P1396B SOF INTEL OPS EXPANSION - PHASE II

CONTRACTOR

ACTIVITY NO	TRANSMITTAL NO	SPEC SECT	DESCRIPTION ITEM SUBMITTED	PARAGRAPH #	CLASSIFICATION	GOVT OR A/E REVWR	CONTRACTOR: SCHEDULE DATES			CONTRACTOR ACTION			APPROVING AUTHORITY					
							SUBMIT	APPROVAL NEEDED BY	MATERIAL NEEDED BY	ACTION CODE	DATE OF ACTION	DATE FWD TO APPR AUTH/ DATE RCD FROM CONTR	DATE FWD TO OTHER REVIEWER	DATE RCD FROM OTH REVIEWER	ACTION CODE	DATE OF ACTION	MAILED TO CONTR/ DATE RCD FRM APPR AUTH	REMARKS
(a)	(b)	(c)	(d)	(e)	(f)		(g)	(h)	(i)	(j)	(k)	(l)	(m)	(n)	(o)	(p)	(q)	(r)
		10 14 01	SD-10 Operation and Maintenance															
			Data															
			Protection and Cleaning	3.1.2														
			SD-11 Closeout Submittals															
			LEED Documentation	1.3														
		10 26 13	SD-02 Shop Drawings															
			Corner Guards	2.2	G	ID												
			Chair Rail	2.3	G	ID												
			Chair Rail	2.3.1	G	ID												
			SD-03 Product Data															
			Corner Guards	2.2	G	ID												
			Chair Rail	2.3	G	ID												
			Chair Rail	2.3.1	G	ID												
			SD-04 Samples															
			Finish	2.5	G	ID												
			SD-06 Test Reports															
			Corner Guards	2.2														
			Chair Rail	2.3														
			Chair Rail	2.3.1														
			SD-07 Certificates															
			Corner Guards	2.2														
			Chair Rail	2.3														
			Chair Rail	2.3.1														
			SD-11 Closeout Submittals															
			LEED Documentation	1.2	G													
		10 28 13	SD-03 Product Data															

SUBMITTAL REGISTER

CONTRACT NO.
1393229

TITLE AND LOCATION
P1396B SOF INTEL OPS EXPANSION - PHASE II

CONTRACTOR

ACTIVITY NO	TRANSMITTAL NO	SPEC SECT	DESCRIPTION ITEM SUBMITTED	PARAGRAPH #	CLASSIFICATION	GOVT OR A/E REVWR	CONTRACTOR: SCHEDULE DATES			CONTRACTOR ACTION			APPROVING AUTHORITY					
							SUBMIT	APPROVAL NEEDED BY	MATERIAL NEEDED BY	ACTION CODE	DATE OF ACTION	DATE FWD TO APPR AUTH/ DATE RCD FROM CONTR	DATE FWD TO OTHER REVIEWER	DATE RCD FROM OTH REVIEWER	ACTION CODE	DATE OF ACTION	MAILED TO CONTR/ DATE RCD FRM APPR AUTH	REMARKS
(a)	(b)	(c)	(d)	(e)	(f)		(g)	(h)	(i)	(j)	(k)	(l)	(m)	(n)	(o)	(p)	(q)	(r)
		10 28 13	Finishes	2.1.2	G	ID												
			Accessory Items	2.2	G	ID												
			SD-04 Samples															
			Finishes	2.1.2	G	ID												
			Accessory Items	2.2	G	ID												
			SD-07 Certificates															
			Accessory Items	2.2														
			SD-10 Operation and Maintenance															
			Data															
			Electric Hand Dryer	2.2.9	G													
			SD-11 Closeout Submittals															
			LEED Documentation	1.2	G													
		10 44 16	SD-01 Preconstruction Submittals															
			Manufacturer's Data	2.1	G													
			SD-02 Shop Drawings															
			Cabinets	Part 2	G													
			Wall Brackets	1.3.1	G													
			SD-03 Product Data															
			Cabinets	Part 2	G													
			Wall Brackets	1.3.1	G													
			Replacement Parts	3.2.1	G													
			SD-04 Samples															
			Cabinet	1.3.1														
			Wall Brackets	1.3.1														
			SD-07 Certificates															

SUBMITTAL REGISTER

CONTRACT NO.
1393229

TITLE AND LOCATION
P1396B SOF INTEL OPS EXPANSION - PHASE II

CONTRACTOR

ACTIVITY NO	TRANSMITTAL NO	SPEC SECT	DESCRIPTION ITEM SUBMITTED	PARAGRAPH #	CLASSIFICATION	GOVT OR A/E REVWR	CONTRACTOR: SCHEDULE DATES			CONTRACTOR ACTION			APPROVING AUTHORITY					
							SUBMIT	APPROVAL NEEDED BY	MATERIAL NEEDED BY	ACTION CODE	DATE OF ACTION	DATE FWD TO APPR AUTH/ DATE RCD FROM CONTR	DATE FWD TO OTHER REVIEWER	DATE RCD FROM OTH REVIEWER	ACTION CODE	DATE OF ACTION	MAILED TO CONTR/ DATE RCD FRM APPR AUTH	REMARKS
(a)	(b)	(c)	(d)	(e)	(f)		(g)	(h)	(i)	(j)	(k)	(l)	(m)	(n)	(o)	(p)	(q)	(r)
		10 44 16	Manufacturer's Warranty with	2.1														
			Inspection Tag															
		12 93 00	SD-02 Shop Drawings															
			Assembly Instruction Drawings	1.3.3														
			SD-03 Product Data															
			Benches	2.4														
			Bicycle Racks	2.5														
			Testing;	3.3														
			Ash Receptacles	2.6														
			SD-04 Samples															
			Finish	2.2.4														
			SD-07 Certificates															
			Primer certificate	1.3.4														
			Powder coatings certificate	1.3.5														
		13 34 19	SD-01 Preconstruction Submittals															
			Manufacturer's Qualifications	1.6.3	G													
			SD-02 Shop Drawings															
			Detail Drawings	1.2.1.7	G													
			Detail Drawings	1.6.1	G													
			SD-03 Product Data															
			Manufacturer's catalog data	1.6.1	G													
			Insulation System	2.9.3	G													
			SD-04 Samples															
			Roof Panels	1.2.1.9	G													
			Wall Panels	1.2.1.9	G													
			Fasteners	2.6.2	G													

SUBMITTAL REGISTER

CONTRACT NO.
1393229

TITLE AND LOCATION
P1396B SOF INTEL OPS EXPANSION - PHASE II

CONTRACTOR

ACTIVITY NO	TRANSMITTAL NO	SPEC SECT	DESCRIPTION ITEM SUBMITTED	PARAGRAPH #	CLASSIFICATION	GOVT OR A/E REVWR	CONTRACTOR: SCHEDULE DATES			CONTRACTOR ACTION			APPROVING AUTHORITY					
							SUBMIT	APPROVAL NEEDED BY	MATERIAL NEEDED BY	ACTION CODE	DATE OF ACTION	DATE FWD TO APPR AUTH/ DATE RCD FROM CONTR	DATE FWD TO OTHER REVIEWER	DATE RCD FROM OTH REVIEWER	ACTION CODE	DATE OF ACTION	MAILED TO CONTR/ DATE RCD FRM APPR AUTH	REMARKS
(a)	(b)	(c)	(d)	(e)	(f)		(g)	(h)	(i)	(j)	(k)	(l)	(m)	(n)	(o)	(p)	(q)	(r)
		13 34 19	Metal Closure Strips	2.9.1	G													
			Vapor Barrier	1.6.10	G													
			Manufacturer's color charts and	2.4.3	G													
			chips															
			SD-05 Design Data															
			descriptive and technical	1.6.1	G													
			literature															
			building design analysis	1.6.1	G													
			SD-06 Test Reports															
			test reports	1.6.1	G													
			Coatings and base metals	1.6.1	G													
			Factory Color Finish Performance	1.6.1	G													
			Requirements															
			SD-07 Certificates															
			Qualification of Manufacturer	1.6.1	G													
			Qualification of Erector	1.6.1	G													
			SD-08 Manufacturer’s Instructions															
			Installation of Roof and Wall	1.6.2	G													
			panels															
			shipping, handling, and storage	1.7	G													
			SD-11 Closeout Submittals															
			Manufacturer's Warranty	3.14.1	G													
			Contractor's Warranty for	3.14.2	G													
			Installation															
		22 00 00	SD-02 Shop Drawings															
			Plumbing System	3.9.1	G													

SUBMITTAL REGISTER

CONTRACT NO.
1393229

TITLE AND LOCATION
P1396B SOF INTEL OPS EXPANSION - PHASE II

CONTRACTOR

ACTIVITY NO	TRANSMITTAL NO	SPEC SECT	DESCRIPTION ITEM SUBMITTED	PARAGRAPH #	CLASSIFICATION	GOVT OR A/E REVWR	CONTRACTOR: SCHEDULE DATES			CONTRACTOR ACTION			APPROVING AUTHORITY					
							SUBMIT	APPROVAL NEEDED BY	MATERIAL NEEDED BY	ACTION CODE	DATE OF ACTION	DATE FWD TO APPR AUTH/ DATE RCD FROM CONTR	DATE FWD TO OTHER REVIEWER	DATE RCD FROM OTH REVIEWER	ACTION CODE	DATE OF ACTION	MAILED TO CONTR/ DATE RCD FRM APPR AUTH	REMARKS
(a)	(b)	(c)	(d)	(e)	(f)		(g)	(h)	(i)	(j)	(k)	(l)	(m)	(n)	(o)	(p)	(q)	(r)
		22 00 00	SD-03 Product Data															
			Fixtures	2.4														
			Flush valve water closets	2.4.2														
			Wall hung lavatories	2.4.3														
			Kitchen sinks	2.4.4														
			Drinking-water coolers	2.4.5	G													
			Water heaters	2.8	G													
			Pumps	2.9	G													
			Backflow prevention assemblies	3.9.1.1	G													
			Vibration-Absorbing Features	3.4	G													
			Plumbing System	3.9.1														
			SD-06 Test Reports															
			Tests, Flushing and Disinfection	3.9														
			Test of Backflow Prevention	3.9.1.1	G													
			Assemblies															
			SD-07 Certificates															
			Materials and Equipment	1.3														
			Bolts	2.1.1														
			SD-10 Operation and Maintenance															
			Data															
			Plumbing System	3.9.1	G													
		23 00 00	SD-03 Product Data															
			Metallic Flexible Duct	2.9.1.1														
			Insulated Nonmetallic Flexible	2.9.1.2														
			Duct Runouts															
			Duct Connectors	2.9.1.2														

SUBMITTAL REGISTER

CONTRACT NO. 1393229

TITLE AND LOCATION: P1396B SOF INTEL OPS EXPANSION - PHASE II

CONTRACTOR

ACTIVITY NO	TRANSMITTAL NO	SPEC SECT	DESCRIPTION ITEM SUBMITTED	PARAGRAPH #	CLASSIFICATION	GOVT OR A/E REVWR	CONTRACTOR: SCHEDULE DATES			CONTRACTOR ACTION			APPROVING AUTHORITY					
							SUBMIT	APPROVAL NEEDED BY	MATERIAL NEEDED BY	ACTION CODE	DATE OF ACTION	DATE FWD TO APPR AUTH/ DATE RCD FROM CONTR	DATE FWD TO OTHER REVIEWER	DATE RCD FROM OTH REVIEWER	ACTION CODE	DATE OF ACTION	MAILED TO CONTR/ DATE RCD FRM APPR AUTH	REMARKS
(a)	(b)	(c)	(d)	(e)	(f)		(g)	(h)	(i)	(j)	(k)	(l)	(m)	(n)	(o)	(p)	(q)	(r)
		23 00 00	Duct Access Doors	2.9.2	G													
			Manual Balancing Dampers	2.9.3	G													
			Sound Attenuation Equipment	2.9.5														
			Acoustical Duct Liner	2.9.5.2														
			Diffusers	2.9.6.1														
			Registers and Grilles	2.9.6.2														
			Air Vents, Penthouses, and	2.9.7														
			Goosenecks															
			In-Line Centrifugal Fans	2.10.1.1														
			Air Handling Units	2.11	G													
			Energy Recovery Devices	2.12	G													
			SD-08 Manufacturer’s Instructions															
			Manufacturer's Installation	3.2														
			Instructions															
			Operation and Maintenance	3.12.2														
			Training															
			SD-10 Operation and Maintenance															
			Data															
			Operation and Maintenance	3.12.1	G													
			Manuals															
			Manual Balancing Dampers	2.9.3	G													
			In-Line Centrifugal Fans	2.10.1.1	G													
			Air Handling Units	2.11	G													
			Energy Recovery Devices	2.12	G													
		23 05 48.00 40	SD-02 Shop Drawings															
			Installation Drawings	1.2	G													

SUBMITTAL REGISTER

CONTRACT NO.
1393229

TITLE AND LOCATION
P1396B SOF INTEL OPS EXPANSION - PHASE II

CONTRACTOR

ACTIVITY NO	TRANSMITTAL NO	SPEC SECT	DESCRIPTION ITEM SUBMITTED	PARAGRAPH #	CLASSIFICATION	GOVT OR A/E REVWR	CONTRACTOR: SCHEDULE DATES			CONTRACTOR ACTION			APPROVING AUTHORITY					
							SUBMIT	APPROVAL NEEDED BY	MATERIAL NEEDED BY	ACTION CODE	DATE OF ACTION	DATE FWD TO APPR AUTH/ DATE RCD FROM CONTR	DATE FWD TO OTHER REVIEWER	DATE RCD FROM OTH REVIEWER	ACTION CODE	DATE OF ACTION	MAILED TO CONTR/ DATE RCD FRM APPR AUTH	REMARKS
(a)	(b)	(c)	(d)	(e)	(f)		(g)	(h)	(i)	(j)	(k)	(l)	(m)	(n)	(o)	(p)	(q)	(r)
		23 05 48.00 40	Outline Drawings	1.2	G													
			SD-03 Product Data															
			Equipment and Performance	1.2	G													
			Data															
			Isolators	2.3	G													
			SD-06 Test Reports															
			Type of Isolator	2.1	G													
			Type of Base	2.1	G													
			Allowable Deflection	2.1	G													
			Measured Deflection	2.1	G													
		23 05 93	SD-01 Preconstruction Submittals															
			TAB team assistants	1.2	G													
			TAB team engineer	1.2	G													
			TAB team field leader	1.2	G													
			SD-06 Test Reports															
			DALT and TAB Work Execution	3.7	G													
			Schedule															
			DALT and TAB Procedures	3.7	G													
			Summary															
			Design review report	3.7	G													
			Pre-Final DALT report	3.3.5	G													
			Final DALT report	3.3.8	G													
			TAB report for Season 1	3.7	G													
			TAB report for Season 2	3.7	G													
			SD-07 Certificates															

SUBMITTAL REGISTER

CONTRACT NO.
1393229

TITLE AND LOCATION
P1396B SOF INTEL OPS EXPANSION - PHASE II

CONTRACTOR

ACTIVITY NO	TRANSMITTAL NO	SPEC SECT	DESCRIPTION ITEM SUBMITTED	PARAGRAPH #	CLASSIFICATION	GOVT OR A/E REVWR	CONTRACTOR: SCHEDULE DATES			CONTRACTOR ACTION			APPROVING AUTHORITY					
							SUBMIT	APPROVAL NEEDED BY	MATERIAL NEEDED BY	ACTION CODE	DATE OF ACTION	DATE FWD TO APPR AUTH/ DATE RCD FROM CONTR	DATE FWD TO OTHER REVIEWER	DATE RCD FROM OTH REVIEWER	ACTION CODE	DATE OF ACTION	MAILED TO CONTR/ DATE RCD FRM APPR AUTH	REMARKS
(a)	(b)	(c)	(d)	(e)	(f)		(g)	(h)	(i)	(j)	(k)	(l)	(m)	(n)	(o)	(p)	(q)	(r)
		23 05 93	Independent TAB agency and	1.5.1	G													
			personnel qualifications															
			Advance notice of Pre-Final	3.3.2	G													
			DALT field work															
			Completed Pre-Final DALT Work	3.7	G													
			Checklist															
			Completed Pre-Final DALT Work	3.7	G													
			Checklist															
			Advance Notice of Season 1 TAB	3.7	G													
			Field Work															
			Completed Season 1 Pre-TAB	3.7														
			Work Checklist															
			Completed Season 1 Pre-TAB	3.7														
			Work Checklist															
			Advance Notice of Season 2 TAB	3.7	G													
			Field Work															
			Completed Season 2 Pre-TAB	3.7														
			Work Checklist															
			Completed Season 2 Pre-TAB	3.7														
			Work Checklist															
			DALT and TAB Submittal and	1.6.1	G													
			Work Schedule															
			Design review report	3.7	G													
		23 07 00	SD-03 Product Data															
			Pipe Insulation Systems	2.3	G													
			Pipe Insulation Systems	3.2	G													

SUBMITTAL REGISTER

CONTRACT NO. 1393229

TITLE AND LOCATION: P1396B SOF INTEL OPS EXPANSION - PHASE II

CONTRACTOR

ACTIVITY NO	TRANSMITTAL NO	SPEC SECT	DESCRIPTION ITEM SUBMITTED	PARAGRAPH #	CLASSIFICATION	GOVT OR A/E REVWR	CONTRACTOR: SCHEDULE DATES			CONTRACTOR ACTION			APPROVING AUTHORITY					
							SUBMIT	APPROVAL NEEDED BY	MATERIAL NEEDED BY	ACTION CODE	DATE OF ACTION	DATE FWD TO APPR AUTH/ DATE RCD FROM CONTR	DATE FWD TO OTHER REVIEWER	DATE RCD FROM OTH REVIEWER	ACTION CODE	DATE OF ACTION	MAILED TO CONTR/ DATE RCD FRM APPR AUTH	REMARKS
(a)	(b)	(c)	(d)	(e)	(f)		(g)	(h)	(i)	(j)	(k)	(l)	(m)	(n)	(o)	(p)	(q)	(r)
		23 07 00	Duct Insulation Systems	3.3	G													
			SD-08 Manufacturer's Instructions															
			Pipe Insulation Systems	2.3	G													
			Pipe Insulation Systems	3.2	G													
			Duct Insulation Systems	3.3	G													
		23 09 23.13 22	SD-02 Shop Drawings															
			Control system drawings title	1.4.1.1	G													
			sheet															
			List of I/O Points	1.4.1.2	G													
			Control System Components List	1.4.1.3	G													
			Control system schematics	1.4.1.4	G													
			HVAC Equipment Electrical	1.4.1.5	G													
			Ladder diagrams															
			Component wiring diagrams	1.4.1.6	G													
			Terminal strip diagrams	1.4.1.7	G													
			BACnet communication	1.4.1.8	G													
			architecture schematic															
			SD-03 Product Data															
			Direct Digital Controllers	2.1.2	G													
			BACnet Gateways	2.1.2.13	G													
			Notebook Computer	2.1.3	G													
			Sensors and Input Hardware	2.2	G													
			Output Hardware	2.3	G													
			Surge and transient protection	2.4.2	G													
			Duct smoke detectors	2.5.1	G													
			Variable frequency (motor) drives	2.6	G													

SUBMITTAL REGISTER

CONTRACT NO.
1393229

TITLE AND LOCATION
P1396B SOF INTEL OPS EXPANSION - PHASE II

CONTRACTOR

ACTIVITY NO	TRANSMITTAL NO	SPEC SECT	DESCRIPTION ITEM SUBMITTED	PARAGRAPH #	CLASSIFICATION	GOVT OR A/E REVWR	CONTRACTOR: SCHEDULE DATES			CONTRACTOR ACTION			APPROVING AUTHORITY					
							SUBMIT	APPROVAL NEEDED BY	MATERIAL NEEDED BY	ACTION CODE	DATE OF ACTION	DATE FWD TO APPR AUTH/ DATE RCD FROM CONTR	DATE FWD TO OTHER REVIEWER	DATE RCD FROM OTH REVIEWER	ACTION CODE	DATE OF ACTION	MAILED TO CONTR/ DATE RCD FRM APPR AUTH	REMARKS
(a)	(b)	(c)	(d)	(e)	(f)		(g)	(h)	(i)	(j)	(k)	(l)	(m)	(n)	(o)	(p)	(q)	(r)
		23 09 23.13 22	SD-05 Design Data															
			Performance Verification Testing	3.5.2	G													
			Plan															
			Pre-Performance Verification	3.5.4	G													
			Testing Checklist															
			SD-06 Test Reports															
			Performance Verification Testing	3.5.11	G													
			Report															
			SD-07 Certificates															
			Contractor's Qualifications	1.6.6	G													
			SD-09 Manufacturer’s Field															
			Reports															
			Pre-PVT Checklist	3.5.1	G													
			SD-10 Operation and Maintenance															
			Data															
			BACnet Direct Digital Control	1.4	G													
			Systems															
			Controls System Operators	3.4	G													
			Manuals															
			VFD Service Manuals	2.6.2	G													
			SD-11 Closeout Submittals															
			DDC Software	2.1.4	G													
			Training documentation	3.6.1	G													
		23 23 00	SD-02 Shop Drawings															
			Refrigerant Piping System	2.3	G													
			SD-03 Product Data															

SUBMITTAL REGISTER

CONTRACT NO. 1393229

TITLE AND LOCATION: P1396B SOF INTEL OPS EXPANSION - PHASE II

CONTRACTOR

ACTIVITY NO	TRANSMITTAL NO	SPEC SECT	DESCRIPTION ITEM SUBMITTED	PARAGRAPH #	CLASSIFICATION	GOVT OR A/E REVWR	CONTRACTOR: SCHEDULE DATES			CONTRACTOR ACTION			APPROVING AUTHORITY					
							SUBMIT	APPROVAL NEEDED BY	MATERIAL NEEDED BY	ACTION CODE	DATE OF ACTION	DATE FWD TO APPR AUTH/ DATE RCD FROM CONTR	DATE FWD TO OTHER REVIEWER	DATE RCD FROM OTH REVIEWER	ACTION CODE	DATE OF ACTION	MAILED TO CONTR/ DATE RCD FRM APPR AUTH	REMARKS
(a)	(b)	(c)	(d)	(e)	(f)		(g)	(h)	(i)	(j)	(k)	(l)	(m)	(n)	(o)	(p)	(q)	(r)
		23 23 00	Refrigerant Piping System	2.3														
			Refrigerant Piping Tests	3.4	G													
			Demonstrations	3.3	G													
			SD-06 Test Reports															
			Refrigerant Piping Tests	3.4														
			SD-07 Certificates															
			Service Organization	2.1	G													
			SD-10 Operation and Maintenance															
			Data															
			Maintenance	1.5														
			Operation and Maintenance	3.3														
			Manuals															
		23 81 00.00 20	SD-02 Shop Drawings															
			Field-assembled refrigerant	2.5.2														
			piping															
			Control system wiring diagrams	1.4.2														
			SD-03 Product Data															
			Air conditioners	2.1														
			Filters	2.2														
			Thermostats	2.1.8														
			Refrigerant piping and	2.5														
			accessories															
			Coatings for finned tube coils	2.3														
			SD-06 Test Reports															
			Salt-spray tests	2.7.1														

SUBMITTAL REGISTER

CONTRACT NO.
1393229

TITLE AND LOCATION
P1396B SOF INTEL OPS EXPANSION - PHASE II

CONTRACTOR

ACTIVITY NO	TRANSMITTAL NO	SPEC SECT	DESCRIPTION ITEM SUBMITTED	PARAGRAPH #	CLASSIFICATION	GOVT OR A/E REVWR	CONTRACTOR: SCHEDULE DATES			CONTRACTOR ACTION			APPROVING AUTHORITY					
							SUBMIT	APPROVAL NEEDED BY	MATERIAL NEEDED BY	ACTION CODE	DATE OF ACTION	DATE FWD TO APPR AUTH/ DATE RCD FROM CONTR	DATE FWD TO OTHER REVIEWER	DATE RCD FROM OTH REVIEWER	ACTION CODE	DATE OF ACTION	MAILED TO CONTR/ DATE RCD FRM APPR AUTH	REMARKS
(a)	(b)	(c)	(d)	(e)	(f)		(g)	(h)	(i)	(j)	(k)	(l)	(m)	(n)	(o)	(p)	(q)	(r)
		23 81 00.00 20	Start-up and initial operational	3.7.3														
			tests															
			SD-08 Manufacturer's Instructions															
			Air conditioners	2.1														
			Filters	2.2														
			Thermostats	2.1.8														
			Refrigerant piping and	2.5														
			accessories															
			SD-10 Operation and Maintenance															
			Data															
			Air conditioners	2.1														
			Filters	2.2														
			Thermostats	2.1.8														
			SD-11 Closeout Submittals															
			Posted operating instructions	1.4.4														
		23 81 28.10 22	SD-03 Product Data															
			Indoor Units	2.3	G													
			Outdoor Units	2.1	G													
			Refrigerant Valves	2.2.3	G													
			SD-06 Test Reports															
			Performance Tests	3.2	G													
			SD-08 Manufacturer's Instructions															
			Manufacturers Installation	3.1														
			Instructions															
			Operation and Maintenance	3.3														
			Training															

SUBMITTAL REGISTER

CONTRACT NO.
1393229

TITLE AND LOCATION
P1396B SOF INTEL OPS EXPANSION - PHASE II

CONTRACTOR

ACTIVITY NO	TRANSMITTAL NO	SPEC SECT	DESCRIPTION ITEM SUBMITTED	PARAGRAPH #	CLASSIFICATION	GOVT OR A/E REVWR	CONTRACTOR: SCHEDULE DATES			CONTRACTOR ACTION			APPROVING AUTHORITY					
							SUBMIT	APPROVAL NEEDED BY	MATERIAL NEEDED BY	ACTION CODE	DATE OF ACTION	DATE FWD TO APPR AUTH/ DATE RCD FROM CONTR	DATE FWD TO OTHER REVIEWER	DATE RCD FROM OTH REVIEWER	ACTION CODE	DATE OF ACTION	MAILED TO CONTR/ DATE RCD FRM APPR AUTH	REMARKS
(a)	(b)	(c)	(d)	(e)	(f)		(g)	(h)	(i)	(j)	(k)	(l)	(m)	(n)	(o)	(p)	(q)	(r)
		23 81 28.10 22	SD-10 Operation and Maintenance															
			Data															
			Operation and Maintenance	3.3														
			Manuals															
			Indoor Units	2.3	G													
			Outdoor Units	2.1	G													
		23 82 00.00 20	SD-03 Product Data															
			Unit heaters	2.1														
			SD-10 Operation and Maintenance															
			Data															
			Unit heaters	2.1														
		26 08 00	SD-06 Test Reports															
			Acceptance tests and inspections	3.1	G													
			SD-07 Certificates															
			Qualifications	1.4.1	G													
			Acceptance test and inspections	1.4.3	G													
			procedure															
		26 12 19.10	SD-02 Shop Drawings															
			Pad-mounted transformer	1.5.1	G													
			drawings															
			SD-03 Product Data															
			Pad-mounted transformers	2.2	G													
			SD-06 Test Reports															
			Acceptance checks and tests	3.6.1	G													
			SD-07 Certificates															
			Transformer Efficiencies	2.2.2.1	G													

SUBMITTAL REGISTER

CONTRACT NO.
1393229

TITLE AND LOCATION
P1396B SOF INTEL OPS EXPANSION - PHASE II

CONTRACTOR

ACTIVITY NO	TRANSMITTAL NO	SPEC SECT	DESCRIPTION ITEM SUBMITTED	PARAGRAPH #	CLASSIFICATION	GOVT OR A/E REVWR	CONTRACTOR: SCHEDULE DATES			CONTRACTOR ACTION			APPROVING AUTHORITY					
							SUBMIT	APPROVAL NEEDED BY	MATERIAL NEEDED BY	ACTION CODE	DATE OF ACTION	DATE FWD TO APPR AUTH/ DATE RCD FROM CONTR	DATE FWD TO OTHER REVIEWER	DATE RCD FROM OTH REVIEWER	ACTION CODE	DATE OF ACTION	MAILED TO CONTR/ DATE RCD FRM APPR AUTH	REMARKS
(a)	(b)	(c)	(d)	(e)	(f)		(g)	(h)	(i)	(j)	(k)	(l)	(m)	(n)	(o)	(p)	(q)	(r)
		26 12 19.10	SD-09 Manufacturer's Field															
			Reports															
			design tests	2.7.2	G													
			routine and other tests	2.7.3	G													
			SD-10 Operation and Maintenance															
			Data															
			Transformer(s)	1.6.1	G													
			SD-11 Closeout Submittals															
			Transformer test schedule	2.7.1	G													
		26 20 00	SD-02 Shop Drawings															
			Panelboards	2.13	G													
			Cable trays	2.3	G													
			Marking strips	3.1.8.1														
			SD-03 Product Data															
			Receptacles	2.12	G													
			Circuit breakers	2.13.3	G													
			Switches	2.10	G													
			Motor controllers	2.15	G													
			Manual motor starters	2.16	G													
			Grounding Busbar	2.20.3	G													
			Surge protective devices	2.25	G													
			SD-06 Test Reports															
			600-volt wiring test	3.5.2	G													
			Grounding system test	3.5.4	G													
			Ground-fault receptacle test	3.5.3	G													
			SD-07 Certificates															

SUBMITTAL REGISTER

CONTRACT NO.
1393229

TITLE AND LOCATION
P1396B SOF INTEL OPS EXPANSION - PHASE II

CONTRACTOR

ACTIVITY NO	TRANSMITTAL NO	SPEC SECT	DESCRIPTION ITEM SUBMITTED	PARAGRAPH #	CLASSIFICATION	GOVT OR A/E REVWR	CONTRACTOR: SCHEDULE DATES			CONTRACTOR ACTION			APPROVING AUTHORITY					
							SUBMIT	APPROVAL NEEDED BY	MATERIAL NEEDED BY	ACTION CODE	DATE OF ACTION	DATE FWD TO APPR AUTH/ DATE RCD FROM CONTR	DATE FWD TO OTHER REVIEWER	DATE RCD FROM OTH REVIEWER	ACTION CODE	DATE OF ACTION	MAILED TO CONTR/ DATE RCD FRM APPR AUTH	REMARKS
(a)	(b)	(c)	(d)	(e)	(f)		(g)	(h)	(i)	(j)	(k)	(l)	(m)	(n)	(o)	(p)	(q)	(r)
		26 20 00	Fuses	2.11	G													
		26 27 14.00 20	SD-02 Shop Drawings															
			Installation Drawings	1.4.1	G													
			SD-03 Product Data															
			Electricity meters	2.1.3	G													
			Current transformer	2.1.2	G													
			communications	2.2	G													
			SD-06 Test Reports															
			Acceptance checks and tests	3.2.1	G													
			System functional verification	3.2.2	G													
			Building meter installation sheet,	3.2.1	G													
			per building															
			Meter configuration template	2.1.1	G													
			Meter configuration report	3.2.1	G													
			SD-10 Operation and Maintenance															
			Data															
			Electricity Meters and	1.5.1	G													
			Accessories															
			SD-11 Closeout Submittals															
			System functional verification	3.2.2	G													
		26 41 00	SD-02 Shop Drawings															
			Overall lightning protection	1.4.1.1	G													
			system															
			Each major component	1.4.1.2	G													
			SD-06 Test Reports															

SUBMITTAL REGISTER

CONTRACT NO. 1393229

TITLE AND LOCATION: P1396B SOF INTEL OPS EXPANSION - PHASE II

CONTRACTOR

ACTIVITY NO	TRANSMITTAL NO	SPEC SECT	DESCRIPTION ITEM SUBMITTED	PARAGRAPH #	CLASSIFICATION	GOVT OR A/E REVWR	CONTRACTOR: SCHEDULE DATES			CONTRACTOR ACTION			APPROVING AUTHORITY					MAILED TO CONTR/ DATE RCD FRM APPR AUTH	REMARKS
							SUBMIT	APPROVAL NEEDED BY	MATERIAL NEEDED BY	ACTION CODE	DATE OF ACTION	DATE FWD TO APPR AUTH/ DATE RCD FROM CONTR	DATE FWD TO OTHER REVIEWER	DATE RCD FROM OTH REVIEWER	ACTION CODE	DATE OF ACTION		
(a)	(b)	(c)	(d)	(e)	(f)		(g)	(h)	(i)	(j)	(k)	(l)	(m)	(n)	(o)	(p)	(q)	(r)
		26 41 00	Lightning Protection and	1.4.3	G													
			Grounding System Test Plan															
			Lightning Protection and	3.4.1	G													
			Grounding System Test															
			SD-07 Certificates															
			Lightning Protection System	1.2.3	G													
			Installers Documentation															
			Component UL Listed and	1.4.2	G													
			Labeled															
			Lightning protection system	1.4.4	G													
			inspection certificate															
			Roof manufacturer's warranty	3.1.1	G													
		26 51 00	SD-03 Product Data															
			Fluorescent lighting fixtures	2.1	G													
			Fluorescent electronic ballasts	1.6.1	G													
			Fluorescent lamps	2.1.4	G													
			Time switch	2.6	G													
			Photocell switch	2.7	G													
			Exit signs	2.8	G													
			Emergency lighting equipment	2.9	G													
			Occupancy sensors	2.11	G													
			Electronic dimming ballast	2.1.2	G													
			Dimming ballast controls	2.1.3	G													
			Local/Regional Materials	1.9.1														
			Energy Efficiency	1.6.3.3														
			SD-06 Test Reports															

SUBMITTAL REGISTER

CONTRACT NO.
1393229

TITLE AND LOCATION
P1396B SOF INTEL OPS EXPANSION - PHASE II

CONTRACTOR

ACTIVITY NO	TRANSMITTAL NO	SPEC SECT	DESCRIPTION ITEM SUBMITTED	PARAGRAPH #	CLASSIFICATION	GOVT OR A/E REVWR	CONTRACTOR: SCHEDULE DATES			CONTRACTOR ACTION			APPROVING AUTHORITY					
							SUBMIT	APPROVAL NEEDED BY	MATERIAL NEEDED BY	ACTION CODE	DATE OF ACTION	DATE FWD TO APPR AUTH/ DATE RCD FROM CONTR	DATE FWD TO OTHER REVIEWER	DATE RCD FROM OTH REVIEWER	ACTION CODE	DATE OF ACTION	MAILED TO CONTR/ DATE RCD FRM APPR AUTH	REMARKS
(a)	(b)	(c)	(d)	(e)	(f)		(g)	(h)	(i)	(j)	(k)	(l)	(m)	(n)	(o)	(p)	(q)	(r)
		26 51 00	Operating test	3.3														
			SD-10 Operation and Maintenance															
			Data															
			Lighting Control System	1.4.1	G													
			Operational Service	1.8														
		26 56 00	SD-01 Preconstruction Submittals															
			Photometric Plan	1.5.2														
			LED Luminaire Warranty	1.7.1	G													
			SD-02 Shop Drawings															
			Luminaire drawings	1.5.1.1	G													
			Poles	1.5.1.2	G													
			SD-03 Product Data															
			LED Luminaires	2.2	G													
			Luminaire Light Sources	2.2.2	G													
			Luminaire Power Supply Units	2.2.3	G													
			(Drivers)															
			Lighting contactor	2.3.2	G													
			Lighting Control Relay Panel	2.3.3	G													
			Motion Sensor	2.3.4	G													
			Photocell	2.3.1	G													
			Concrete poles	2.4.1	G													
			Brackets	2.5														
			SD-05 Design Data															
			Design Data for luminaires	1.5.3	G													
			SD-06 Test Reports															

SUBMITTAL REGISTER

CONTRACT NO.
1393229

TITLE AND LOCATION
P1396B SOF INTEL OPS EXPANSION - PHASE II

CONTRACTOR

ACTIVITY NO	TRANSMITTAL NO	SPEC SECT	DESCRIPTION ITEM SUBMITTED	PARAGRAPH #	CLASSIFICATION	GOVT OR A/E REVWR	CONTRACTOR: SCHEDULE DATES			CONTRACTOR ACTION			APPROVING AUTHORITY					
							SUBMIT	APPROVAL NEEDED BY	MATERIAL NEEDED BY	ACTION CODE	DATE OF ACTION	DATE FWD TO APPR AUTH/ DATE RCD FROM CONTR	DATE FWD TO OTHER REVIEWER	DATE RCD FROM OTH REVIEWER	ACTION CODE	DATE OF ACTION	MAILED TO CONTR/ DATE RCD FRM APPR AUTH	REMARKS
(a)	(b)	(c)	(d)	(e)	(f)		(g)	(h)	(i)	(j)	(k)	(l)	(m)	(n)	(o)	(p)	(q)	(r)
		26 56 00	LED Luminaire - IES LM-79 Test	1.5.4	G													
			Report															
			LED Light Source - IES LM-80	1.5.5	G													
			Test Report															
			Operating test	3.2														
			SD-07 Certificates															
			Luminaire Useful Life Certificate	1.7.1	G													
			SD-08 Manufacturer's Instructions															
			Concrete poles	2.4.1														
			SD-10 Operation and Maintenance															
			Data															
			Operational Service	1.8														
		27 10 00	SD-02 Shop Drawings															
			Telecommunications drawings	1.7.1	G													
			Distribution frames	1.7.2	G													
			SD-03 Product Data															
			Telecommunications cabling	2.3.1	G													
			Patch panels	2.4.4	G													
			Telecommunications	2.6	G													
			outlet/connector assemblies															
			Equipment support frame	2.4.1	G													
			Building protector assemblies	2.4.2	G													
			Connector blocks	2.4.3	G													
			Protector modules	2.4.2.1	G													
			SD-06 Test Reports															

SUBMITTAL REGISTER

CONTRACT NO.
1393229

TITLE AND LOCATION
P1396B SOF INTEL OPS EXPANSION - PHASE II

CONTRACTOR

ACTIVITY NO	TRANSMITTAL NO	SPEC SECT	DESCRIPTION ITEM SUBMITTED	PARAGRAPH #	CLASSIFICATION	GOVT OR A/E REVWR	CONTRACTOR: SCHEDULE DATES			CONTRACTOR ACTION			APPROVING AUTHORITY					
							SUBMIT	APPROVAL NEEDED BY	MATERIAL NEEDED BY	ACTION CODE	DATE OF ACTION	DATE FWD TO APPR AUTH/ DATE RCD FROM CONTR	DATE FWD TO OTHER REVIEWER	DATE RCD FROM OTH REVIEWER	ACTION CODE	DATE OF ACTION	MAILED TO CONTR/ DATE RCD FRM APPR AUTH	REMARKS
(a)	(b)	(c)	(d)	(e)	(f)		(g)	(h)	(i)	(j)	(k)	(l)	(m)	(n)	(o)	(p)	(q)	(r)
		27 10 00	Telecommunications cabling	3.3.1	G													
			testing															
			Factory reel tests	3.3.1.2	G													
			SD-07 Certificates															
			Telecommunications Contractor	1.7.3.1	G													
			Manufacturer Qualifications	1.7.3.2	G													
			Test plan	1.7.4	G													
			SD-10 Operation and Maintenance															
			Data															
			Telecommunications cabling and	1.7.5	G													
			pathway system															
		27 40 00	SD-02 Shop Drawings															
			Audio Visual Floor Plans	1.13.1	G													
			Detail Riser Diagrams	1.13.1	G													
			SD-03 Product Data															
			Visual Systems	2.1.2	G													
			Audio Systems	2.1.3	G													
			Control Systems	2.1.4	G													
			Ceiling Mounted Loudspeaker	2.3.1	G													
			Audio Distribution Amplifier	2.3.2	G													
			Power Amplifier	2.3.3	G													
			Audio Patch Panel	2.3.4	G													
			Digital Signal Processor	2.3.5	G													
			Audio Conference	2.3.6	G													
			Conferencing DSP	2.3.7	G													

SUBMITTAL REGISTER

CONTRACT NO.
1393229

TITLE AND LOCATION
P1396B SOF INTEL OPS EXPANSION - PHASE II

CONTRACTOR

ACTIVITY NO	TRANSMITTAL NO	SPEC SECT	DESCRIPTION ITEM SUBMITTED	PARAGRAPH #	CLASSIFICATION	GOVT OR A/E REVWR	CONTRACTOR: SCHEDULE DATES			CONTRACTOR ACTION			APPROVING AUTHORITY					
							SUBMIT	APPROVAL NEEDED BY	MATERIAL NEEDED BY	ACTION CODE	DATE OF ACTION	DATE FWD TO APPR AUTH/ DATE RCD FROM CONTR	DATE FWD TO OTHER REVIEWER	DATE RCD FROM OTH REVIEWER	ACTION CODE	DATE OF ACTION	MAILED TO CONTR/ DATE RCD FRM APPR AUTH	REMARKS
(a)	(b)	(c)	(d)	(e)	(f)		(g)	(h)	(i)	(j)	(k)	(l)	(m)	(n)	(o)	(p)	(q)	(r)
		27 40 00	Scaling Presentation Matrix Switcher	2.4.1	G													
			Scaling Presentation Switcher	2.4.2	G													
			Universal VGA Input Board	2.4.3	G													
			Matrix Switcher HDMI Transmitter Board	2.4.4	G													
			Matrix Switcher HDMI Output Board	2.4.5	G													
			Matrix Switcher HDMI Receiver Board	2.4.6	G													
			Matrix Switcher Blank Plate	2.4.7	G													
			Modular Digital Matrix Switcher	2.4.8	G													
			Switcher with Transmitter	2.4.9	G													
			Twisted Pair Transmitter for HDMI	2.4.10	G													
			Mono 70/100V Amplifier	2.4.11	G													
			Video Patch Panel	2.4.12	G													
			Pan Tilt Zoom Camera	2.4.13	G													
			Video Conferencing	2.4.15	G													
			DVD Player	2.4.16	G													
			LCD Flat Panel Video Display	2.4.17	G													
			Flat Panel Video Signage Display	2.4.18	G													
			Interactive Whiteboard	2.4.19	G													
			DVI Extender	2.4.20	G													
			Image Geometry Correction	2.4.21	G													
			Digital Signage System	2.5.1	G													

SUBMITTAL REGISTER

CONTRACT NO.
1393229

TITLE AND LOCATION
P1396B SOF INTEL OPS EXPANSION - PHASE II

CONTRACTOR

ACTIVITY NO	TRANSMITTAL NO	SPEC SECT	DESCRIPTION ITEM SUBMITTED	PARAGRAPH #	CLASSIFICATION	GOVT OR A/E REVWR	CONTRACTOR: SCHEDULE DATES			CONTRACTOR ACTION			APPROVING AUTHORITY					
							SUBMIT	APPROVAL NEEDED BY	MATERIAL NEEDED BY	ACTION CODE	DATE OF ACTION	DATE FWD TO APPR AUTH/ DATE RCD FROM CONTR	DATE FWD TO OTHER REVIEWER	DATE RCD FROM OTH REVIEWER	ACTION CODE	DATE OF ACTION	MAILED TO CONTR/ DATE RCD FRM APPR AUTH	REMARKS
(a)	(b)	(c)	(d)	(e)	(f)		(g)	(h)	(i)	(j)	(k)	(l)	(m)	(n)	(o)	(p)	(q)	(r)
		27 40 00	SATELLITE MASTER ANTENNA	2.6	G													
			TELEVISION															
			CONFERENCING SYSTEM	2.7	G													
			REMOTE CONTROL SYSTEM	2.8	G													
			CENTRAL															
			Tabletop Control Touch Panel	2.8.4	G													
			Two Input Wall Plates	2.9.1	G													
			Transmitter															
			Two Input Wall Plates Receiver	2.9.2	G													
			Gigabit Edge Switch	2.10.1	G													
			Extenders	2.10.2	G													
			IP Link Control Processor-Type 1	2.10.3	G													
			IP Link Control Processor-Type 2	2.10.4	G													
			USB Extender	2.10.5	G													
			Flat Panel Displays Mount	2.13.1	G													
			Flat Panel Display Wall Mount	2.13.2	G													
			(Articulated Arm)															
			Wire and Cable	2.14	G													
			Furniture Mountable Enclosure	2.15.1	G													
			for Cables															
			Table Top Pop-Up Box	2.15.2	G													
			Teaching Stations (portable	2.16.1	G													
			Furniture)															
			Millwork Racks Inside Credenza	2.16.3	G													
			Freestanding Racks Outside	2.16.4	G													
			Credenza															

SUBMITTAL REGISTER

CONTRACT NO.
1393229

TITLE AND LOCATION
P1396B SOF INTEL OPS EXPANSION - PHASE II

CONTRACTOR

ACTIVITY NO	TRANSMITTAL NO	SPEC SECT	DESCRIPTION ITEM SUBMITTED	PARAGRAPH #	CLASSIFICATION	GOVT OR A/E REVWR	CONTRACTOR: SCHEDULE DATES			CONTRACTOR ACTION			APPROVING AUTHORITY					
							SUBMIT	APPROVAL NEEDED BY	MATERIAL NEEDED BY	ACTION CODE	DATE OF ACTION	DATE FWD TO APPR AUTH/ DATE RCD FROM CONTR	DATE FWD TO OTHER REVIEWER	DATE RCD FROM OTH REVIEWER	ACTION CODE	DATE OF ACTION	MAILED TO CONTR/ DATE RCD FRM APPR AUTH	REMARKS
(a)	(b)	(c)	(d)	(e)	(f)		(g)	(h)	(i)	(j)	(k)	(l)	(m)	(n)	(o)	(p)	(q)	(r)
		27 40 00	Uninterruptible Power Supply	2.16.7	G													
			(UPS)															
			Balance/ Unbalanced Conversion	2.16.8	G													
			Stereo to Mono Audio	2.16.9	G													
			Conversion															
			SD-06 Test Reports															
			Category 6 Shielded Cable	3.4.4	G													
			Testing															
			SD-10 Operation and Maintenance															
			Data															
			Operation and Maintenance	3.11.1	G													
			Manuals															
			SD-11 Closeout Submittals															
			Record Documentation	3.11.2	G													
		27 54 00.00 20	SD-02 Shop Drawings															
			wiring diagrams and installation	1.6.1	G													
			details															
			system components	1.4.4	G													
			SD-03 Product Data															
			Cables	2.2.1	G													
			Outlets	2.2.2	G													
			Connectors	2.2.3	G													
			Grounding block	2.3.1	G													
			SD-06 Test Reports															
			System pretest	3.2.1														
			Acceptance tests	3.2.2														

SUBMITTAL REGISTER

CONTRACT NO.
1393229

TITLE AND LOCATION
P1396B SOF INTEL OPS EXPANSION - PHASE II

CONTRACTOR

ACTIVITY NO	TRANSMITTAL NO	SPEC SECT	DESCRIPTION ITEM SUBMITTED	PARAGRAPH #	CLASSIFICATION	GOVT OR A/E REVWR	CONTRACTOR: SCHEDULE DATES			CONTRACTOR ACTION			APPROVING AUTHORITY					
							SUBMIT	APPROVAL NEEDED BY	MATERIAL NEEDED BY	ACTION CODE	DATE OF ACTION	DATE FWD TO APPR AUTH/ DATE RCD FROM CONTR	DATE FWD TO OTHER REVIEWER	DATE RCD FROM OTH REVIEWER	ACTION CODE	DATE OF ACTION	MAILED TO CONTR/ DATE RCD FRM APPR AUTH	REMARKS
(a)	(b)	(c)	(d)	(e)	(f)		(g)	(h)	(i)	(j)	(k)	(l)	(m)	(n)	(o)	(p)	(q)	(r)
		27 54 00.00 20	SD-08 Manufacturer's Instructions															
			Connector Installation	1.6.2														
		28 31 76.00 22	SD-01 Preconstruction Submittals															
			Qualifications for Fire Alarm	1.6.1.1	G													
			System Subcontractor															
			On Staff Fire Alarm System	1.6.1.1.1	G													
			Designer(s)															
			Supervising Fire Alarm	1.6.1.1.2	G													
			Technician															
			Installing Technicians	1.6.1.1.3	G													
			Testing Personnel	1.6.1.1.4	G													
			SD-02 Shop Drawings															
			Wiring Diagrams	3.2.1	G													
			System Layout	1.4.1	G													
			System Operation	2.20	G													
			Notification Appliances	2.13	G													
			Amplifiers	2.4	G													
			As-Built Drawings	3.5.2														
			SD-03 Product Data															
			Technical Data And Computer	1.4.2	G													
			Software															
			Fire alarm control unit	1.4.2	G													
			Fire alarm control unit	2.3	G													
			Autonomous control unit	2.3	G													

SUBMITTAL REGISTER

CONTRACT NO. 1393229

TITLE AND LOCATION: P1396B SOF INTEL OPS EXPANSION - PHASE II

CONTRACTOR

ACTIVITY NO	TRANSMITTAL NO	SPEC SECT	DESCRIPTION ITEM SUBMITTED	PARAGRAPH #	CLASSIFICATION	GOVT OR A/E REVWR	CONTRACTOR: SCHEDULE DATES			CONTRACTOR ACTION			APPROVING AUTHORITY					
							SUBMIT	APPROVAL NEEDED BY	MATERIAL NEEDED BY	ACTION CODE	DATE OF ACTION	DATE FWD TO APPR AUTH/ DATE RCD FROM CONTR	DATE FWD TO OTHER REVIEWER	DATE RCD FROM OTH REVIEWER	ACTION CODE	DATE OF ACTION	MAILED TO CONTR/ DATE RCD FRM APPR AUTH	REMARKS
(a)	(b)	(c)	(d)	(e)	(f)		(g)	(h)	(i)	(j)	(k)	(l)	(m)	(n)	(o)	(p)	(q)	(r)
		28 31 76.00 22	Combination emergency	2.3	G													
			communications system panel															
			(CECP)															
			Digitalized voice generators	2.4	G													
			Digitalized voice generators	2.4	G													
			Amplifiers	2.4	G													
			Document box	2.21.1	G													
			Digital alarm communicator	2.7.1	G													
			transmitter (DACT)															
			Batteries	2.8.1	G													
			Battery chargers	2.8.2	G													
			Wiring	2.9	G													
			Surge protection	2.10	G													
			Ceiling bridges	2.11	G													
			Back boxes and conduit	2.12	G													
			Terminal cabinets	3.2.2	G													
			Notification appliances	2.13	G													
			Addressable monitor module	2.14	G													
			Addressable control/relay module	2.15	G													
			Isolation module	2.16	G													
			Manual stations	2.17	G													
			Smoke detectors	2.18	G													
			Environmental enclosures or	2.19	G													
			guards															
			Manufacturer's installation and	1.9	G													
			maintenance manuals															

SUBMITTAL REGISTER

CONTRACT NO. 1393229

TITLE AND LOCATION: P1396B SOF INTEL OPS EXPANSION - PHASE II

CONTRACTOR

ACTIVITY NO	TRANSMITTAL NO	SPEC SECT	DESCRIPTION ITEM SUBMITTED	PARAGRAPH #	CLASSIFICATION	GOVT OR A/E REVWR	CONTRACTOR: SCHEDULE DATES			CONTRACTOR ACTION			APPROVING AUTHORITY				MAILED TO CONTR/	REMARKS
							SUBMIT	APPROVAL NEEDED BY	MATERIAL NEEDED BY	ACTION CODE	DATE OF ACTION	DATE FWD TO APPR AUTH/ DATE RCD FROM CONTR	DATE FWD TO OTHER REVIEWER	DATE RCD FROM OTH REVIEWER	ACTION CODE	DATE OF ACTION	DATE RCD FRM APPR AUTH	
(a)	(b)	(c)	(d)	(e)	(f)		(g)	(h)	(i)	(j)	(k)	(l)	(m)	(n)	(o)	(p)	(q)	(r)
		28 31 76.00 22	Manufacturer's installation and	1.9	G													
			maintenance manuals															
			Manufacturer's installation and	1.9	G													
			maintenance manuals															
			Manufacturer's installation and	1.9	G													
			maintenance manuals															
			SD-05 Design Data															
			System Operation	2.20	G													
			Batteries	2.8.1	G													
			Voltage Drop Calculations	1.10	G													
			Spare Capacity Calculations	1.10	G													
			SD-06 Test Reports															
			Field Quality Control	3.5														
			Testing Procedures	3.5.1	G													
			Smoke detector testing	2.18.2	G													
			SD-09 Manufacturer’s Field															
			Reports															
			Combination emergency	2.3														
			communications system panel															
			(CECP)															
			SD-10 Operation and Maintenance															
			Data															
			Operation and Maintenance	1.8	G													
			(O&M) Instructions															
			Instruction of Government	3.6														
			Employees															

SUBMITTAL REGISTER

CONTRACT NO.
1393229

TITLE AND LOCATION
P1396B SOF INTEL OPS EXPANSION - PHASE II

CONTRACTOR

ACTIVITY NO	TRANSMITTAL NO	SPEC SECT	DESCRIPTION ITEM SUBMITTED	PARAGRAPH #	CLASSIFICATION	GOVT OR A/E REVWR	CONTRACTOR: SCHEDULE DATES			CONTRACTOR ACTION			APPROVING AUTHORITY					
							SUBMIT	APPROVAL NEEDED BY	MATERIAL NEEDED BY	ACTION CODE	DATE OF ACTION	DATE FWD TO APPR AUTH/ DATE RCD FROM CONTR	DATE FWD TO OTHER REVIEWER	DATE RCD FROM OTH REVIEWER	ACTION CODE	DATE OF ACTION	MAILED TO CONTR/ DATE RCD FRM APPR AUTH	REMARKS
(a)	(b)	(c)	(d)	(e)	(f)		(g)	(h)	(i)	(j)	(k)	(l)	(m)	(n)	(o)	(p)	(q)	(r)
		31 05 19	SD-07 Certificates															
			Geotextile	2.1.1	G													
		31 23 00.00 20	SD-01 Preconstruction Submittals															
			Structural Fill	2.1.3	G													
			Shoring and Sheeting Plan	1.7.1														
			Dewatering work plan	1.7.2														
			SD-06 Test Reports															
			Borrow Site Testing	1.6	G													
			Fill and backfill	3.16.3.1														
			Select material	3.16.3.2														
			Porous fill	3.16.3.3														
			Density tests	3.16.3.4														
			Moisture Content Tests	3.16.3.5														
			Surcharge Monitoring	3.16.1	G													
		31 31 16.00 22	SD-03 Product Data															
			Termiticide Application Plan	3.3.6	G													
			Termiticides	2.1														
			Foundation Exterior	3.3.3														
			Utilities and Vents	3.3.4														
			Crawl and Plenum Air Spaces	3.3.5														
			Verification of Measurement	3.1														
			Application Equipment	3.4.1														
			Warranty	1.6														
			SD-04 Samples															
			Termiticides	2.1														
			SD-06 Test Reports															

SUBMITTAL REGISTER

CONTRACT NO.
1393229

TITLE AND LOCATION
P1396B SOF INTEL OPS EXPANSION - PHASE II

CONTRACTOR

ACTIVITY NO	TRANSMITTAL NO	SPEC SECT	DESCRIPTION ITEM SUBMITTED	PARAGRAPH #	CLASSIFICATION	GOVT OR A/E REVWR	CONTRACTOR: SCHEDULE DATES			CONTRACTOR ACTION			APPROVING AUTHORITY					
							SUBMIT	APPROVAL NEEDED BY	MATERIAL NEEDED BY	ACTION CODE	DATE OF ACTION	DATE FWD TO APPR AUTH/ DATE RCD FROM CONTR	DATE FWD TO OTHER REVIEWER	DATE RCD FROM OTH REVIEWER	ACTION CODE	DATE OF ACTION	MAILED TO CONTR/ DATE RCD FRM APPR AUTH	REMARKS
(a)	(b)	(c)	(d)	(e)	(f)		(g)	(h)	(i)	(j)	(k)	(l)	(m)	(n)	(o)	(p)	(q)	(r)
		31 31 16.00 22	Equipment Calibration and Tank	3.4.1														
			Measurement															
			Soil Moisture	1.5.1														
			Quality Assurance	1.3														
			SD-07 Certificates															
			Qualifications	1.3.2														
			SD-11 Closeout Submittals															
			Field Pesticide/Herbicide	1.3														
			Management Record Form															
		32 05 33	SD-01 Preconstruction Submittals															
			Integrated Pest Management	2.4														
			Plan															
			SD-03 Product Data															
			Local/Regional Materials	1.6.1														
			Fertilizer	2.1														
			Plant Quantities	3.4.2														
			Hose	2.2.1														
			Mulches Topdressing	2.3														
			Organic Mulch Materials	2.3.2														
			SD-07 Certificates															
			Maintenance inspection report	3.4.1														
			SD-10 Operation and Maintenance															
			Data															
			Maintenance	1.7														
			SD-11 Closeout Submittals															
			Tree, staking and guying removal	3.4.3														

SUBMITTAL REGISTER

CONTRACT NO.
1393229

TITLE AND LOCATION
P1396B SOF INTEL OPS EXPANSION - PHASE II

CONTRACTOR

ACTIVITY NO	TRANSMITTAL NO	SPEC SECT	DESCRIPTION ITEM SUBMITTED	PARAGRAPH #	CLASSIFICATION	GOVT OR A/E REVWR	CONTRACTOR: SCHEDULE DATES			CONTRACTOR ACTION			APPROVING AUTHORITY					
							SUBMIT	APPROVAL NEEDED BY	MATERIAL NEEDED BY	ACTION CODE	DATE OF ACTION	DATE FWD TO APPR AUTH/ DATE RCD FROM CONTR	DATE FWD TO OTHER REVIEWER	DATE RCD FROM OTH REVIEWER	ACTION CODE	DATE OF ACTION	MAILED TO CONTR/ DATE RCD FRM APPR AUTH	REMARKS
(a)	(b)	(c)	(d)	(e)	(f)		(g)	(h)	(i)	(j)	(k)	(l)	(m)	(n)	(o)	(p)	(q)	(r)
		32 10 00	SD-03 Product Data															
			Precast car stops	2.10														
			Asphalt cement	2.3														
			Asphalt cement	2.4														
			Local/Regional Materials	1.5.1														
			Albedo	2.1.1														
			SD-04 Samples															
			cores	3.3														
			SD-06 Test Reports															
			Trial batch	1.3.4														
			Mix design	1.3.5														
			Asphalt concrete	2.1														
			Density	3.3.2.1														
			Density	3.3.2.2														
			Thickness	3.3.2.1														
			Thickness	3.3.2.2														
			Straightedge test	3.3.2.1														
			SD-07 Certificates															
			mix delivery record	1.3.3														
			Asphalt concrete	2.1														
			Asphalt concrete	2.1														
			Curbs	2.6														
			Guard (Guide) rails	2.7														
			Median barriers	2.8														
			Traffic signs	2.9														
		32 13 13.06	SD-03 Product Data															

SUBMITTAL REGISTER

CONTRACT NO. 1393229

TITLE AND LOCATION: P1396B SOF INTEL OPS EXPANSION - PHASE II

CONTRACTOR

ACTIVITY NO	TRANSMITTAL NO	SPEC SECT	DESCRIPTION ITEM SUBMITTED	PARAGRAPH #	CLASSIFICATION	GOVT OR A/E REVWR	CONTRACTOR: SCHEDULE DATES			CONTRACTOR ACTION			APPROVING AUTHORITY					
							SUBMIT	APPROVAL NEEDED BY	MATERIAL NEEDED BY	ACTION CODE	DATE OF ACTION	DATE FWD TO APPR AUTH/ DATE RCD FROM CONTR	DATE FWD TO OTHER REVIEWER	DATE RCD FROM OTH REVIEWER	ACTION CODE	DATE OF ACTION	MAILED TO CONTR/ DATE RCD FRM APPR AUTH	REMARKS
(a)	(b)	(c)	(d)	(e)	(f)		(g)	(h)	(i)	(j)	(k)	(l)	(m)	(n)	(o)	(p)	(q)	(r)
		32 13 13.06	Curing materials	2.1.6														
			Admixtures	2.1.4														
			Dowel	2.1.5.1														
			Reinforcement	2.1.5.4														
			Cementitious Materials	2.1.1														
			Aggregate	2.1.3														
			Local/Regional Materials	1.6.1														
			Albedo	2.2.2														
			SD-04 Samples															
			Field-Constructed Mockup	1.5.5	G													
			SD-05 Design Data															
			mix design	2.3	G													
			SD-06 Test Reports															
			Aggregate	2.1.3														
			Concrete slump tests	3.7.2														
			Air content tests	3.7.4														
			Flexural strength tests	3.7.3														
			Cementitious materials	2.1.1	G													
			SD-07 Certificates															
			Ready-mixed concrete plant	1.5.1														
			Batch tickets	1.5.4														
			Cementitious materials	2.1.1	G													
			SD-11 Closeout Submittals															
			Cementitious Materials	2.1.1														
			Albedo	2.2.2														
		32 16 13	SD-03 Product Data															

SUBMITTAL REGISTER

CONTRACT NO.
1393229

TITLE AND LOCATION
P1396B SOF INTEL OPS EXPANSION - PHASE II

CONTRACTOR

ACTIVITY NO	TRANSMITTAL NO	SPEC SECT	DESCRIPTION ITEM SUBMITTED	PARAGRAPH #	CLASSIFICATION	GOVT OR A/E REVWR	CONTRACTOR: SCHEDULE DATES			CONTRACTOR ACTION			APPROVING AUTHORITY					
							SUBMIT	APPROVAL NEEDED BY	MATERIAL NEEDED BY	ACTION CODE	DATE OF ACTION	DATE FWD TO APPR AUTH/ DATE RCD FROM CONTR	DATE FWD TO OTHER REVIEWER	DATE RCD FROM OTH REVIEWER	ACTION CODE	DATE OF ACTION	MAILED TO CONTR/ DATE RCD FRM APPR AUTH	REMARKS
(a)	(b)	(c)	(d)	(e)	(f)		(g)	(h)	(i)	(j)	(k)	(l)	(m)	(n)	(o)	(p)	(q)	(r)
		32 16 13	Concrete	2.1														
			SD-06 Test Reports															
			Field Quality Control	3.8														
		32 17 23.00 20	SD-03 Product Data															
			Reflective media for roads and	2.1.2														
			streets															
			Paints for roads and streets	2.1.1														
			Equipment	1.5														
			Qualifications	1.7														
			SD-06 Test Reports															
			Reflective media for roads and	2.1.2														
			streets															
			Paints for roads and streets	2.1.1														
			SD-07 Certificates															
			Reflective media for roads and	2.1.2														
			streets															
			Paints for roads and streets	2.1.1														
			Construction equipment list	1.5														
			SD-08 Manufacturer’s Instructions															
			Paints for roads and streets	2.1.1														
		32 92 23	SD-03 Product Data															
			Fertilizer	2.4														
			SD-06 Test Reports															
			Topsoil composition tests	2.1.1														
			Topsoil composition tests	2.2.3														
			SD-07 Certificates															

SUBMITTAL REGISTER

CONTRACT NO.
1393229

TITLE AND LOCATION
P1396B SOF INTEL OPS EXPANSION - PHASE II

CONTRACTOR

ACTIVITY NO	TRANSMITTAL NO	SPEC SECT	DESCRIPTION ITEM SUBMITTED	PARAGRAPH #	CLASSIFICATION	GOVT OR A/E REVWR	CONTRACTOR: SCHEDULE DATES			CONTRACTOR ACTION			APPROVING AUTHORITY					
							SUBMIT	APPROVAL NEEDED BY	MATERIAL NEEDED BY	ACTION CODE	DATE OF ACTION	DATE FWD TO APPR AUTH/ DATE RCD FROM CONTR	DATE FWD TO OTHER REVIEWER	DATE RCD FROM OTH REVIEWER	ACTION CODE	DATE OF ACTION	MAILED TO CONTR/ DATE RCD FRM APPR AUTH	REMARKS
(a)	(b)	(c)	(d)	(e)	(f)		(g)	(h)	(i)	(j)	(k)	(l)	(m)	(n)	(o)	(p)	(q)	(r)
		32 92 23	sods	2.1														
		32 93 00	SD-01 Preconstruction Submittals															
			State Landscape Contractor's	1.4.3														
			License															
			Time Restrictions and Planting	1.6														
			Conditions															
			SD-03 Product Data															
			Local/Regional Materials	1.8.1														
			Gypsum	2.3.8														
			Mulch	2.7	G	LA												
			Ground Stakes	2.8.1.2														
			Organic Mulch Materials	2.7.2	G	LA												
			Hose	2.12.1														
			Fertilizer	2.5														
			Weed control fabric	1.5.2.4	G	LA												
			Root control barrier	1.5.2.4	G	LA												
			Staking Material	2.8.1														
			Composted Derivatives	2.3.7														
			Local/Regional Materials;	1.8.1														
			Metal anchors	2.8.7														
			Erosion control materials	2.10														
			Photographs	1.4.4														
			SD-04 Samples															
			Mulch	2.7														
			SD-06 Test Reports															
			Topsoil composition tests	1.4.1														

SUBMITTAL REGISTER

CONTRACT NO.
1393229

TITLE AND LOCATION
P1396B SOF INTEL OPS EXPANSION - PHASE II

CONTRACTOR

ACTIVITY NO	TRANSMITTAL NO	SPEC SECT	DESCRIPTION ITEM SUBMITTED	PARAGRAPH #	CLASSIFICATION	GOVT OR A/E REVWR	CONTRACTOR: SCHEDULE DATES			CONTRACTOR ACTION			APPROVING AUTHORITY					
							SUBMIT	APPROVAL NEEDED BY	MATERIAL NEEDED BY	ACTION CODE	DATE OF ACTION	DATE FWD TO APPR AUTH/ DATE RCD FROM CONTR	DATE FWD TO OTHER REVIEWER	DATE RCD FROM OTH REVIEWER	ACTION CODE	DATE OF ACTION	MAILED TO CONTR/ DATE RCD FRM APPR AUTH	REMARKS
(a)	(b)	(c)	(d)	(e)	(f)		(g)	(h)	(i)	(j)	(k)	(l)	(m)	(n)	(o)	(p)	(q)	(r)
		32 93 00	Topsoil composition tests	2.2.4														
			Percolation Test	1.4.5														
			SD-07 Certificates															
			Nursery certifications	1.4.2														
			Nursery certifications	2.1.1														
		33 11 00	SD-03 Product Data															
			Piping Materials	2.1.1														
			Water distribution main	2.1														
			Water service line	2.2														
			Hydrants	2.1.2.3														
			Indicator posts	2.1.2.4														
			Corporation stops	2.2.2.1														
			Valve boxes	2.1.2.5														
			Valve boxes	2.2.2.8														
			SD-06 Test Reports															
			Disinfection	2.2.2.10	G													
			SD-07 Certificates															
			Water distribution main	2.1														
			Water service line	2.2														
			lining	2.1.1.1														
			lining	2.1.1.1														
			lining	2.1.1.2														
			lining	2.1.1.2														
			hydrants	2.1.2.3														
			SD-08 Manufacturer's Instructions															
			Delivery, storage, and handling	1.4														

SUBMITTAL REGISTER

CONTRACT NO.
1393229

TITLE AND LOCATION
P1396B SOF INTEL OPS EXPANSION - PHASE II

CONTRACTOR

ACTIVITY NO	TRANSMITTAL NO	SPEC SECT	DESCRIPTION ITEM SUBMITTED	PARAGRAPH #	CLASSIFICATION	GOVT OR A/E REVWR	CONTRACTOR: SCHEDULE DATES			CONTRACTOR ACTION			APPROVING AUTHORITY					
							SUBMIT	APPROVAL NEEDED BY	MATERIAL NEEDED BY	ACTION CODE	DATE OF ACTION	DATE FWD TO APPR AUTH/ DATE RCD FROM CONTR	DATE FWD TO OTHER REVIEWER	DATE RCD FROM OTH REVIEWER	ACTION CODE	DATE OF ACTION	MAILED TO CONTR/ DATE RCD FRM APPR AUTH	REMARKS
(a)	(b)	(c)	(d)	(e)	(f)		(g)	(h)	(i)	(j)	(k)	(l)	(m)	(n)	(o)	(p)	(q)	(r)
		33 11 00	Installation	3.1.1														
		33 30 00	SD-01 Preconstruction Submittals															
			Existing Conditions	1.6														
			SD-02 Shop Drawings															
			Drawings	1.4.2														
			Precast concrete manhole	2.3.1														
			Metal items	2.3.4														
			Frames, covers, and gratings	2.3.4.1														
			SD-03 Product Data															
			Pipeline materials	2.1														
			SD-06 Test Reports															
			Reports	2.4														
			SD-07 Certificates															
			Portland Cement	2.2.2														
		33 40 00	SD-03 Product Data															
			Placing Pipe	3.3														
			SD-04 Samples															
			Pipe for Culverts and Storm	2.1														
			Drains															
			SD-07 Certificates															
			Resin Certification	2.1.3														
			Resin Certification	2.1.4														
			Pipeline Testing	3.8														
			Hydrostatic Test on Watertight	2.7														
			Joints															
			Determination of Density	3.7.5														

SUBMITTAL REGISTER

CONTRACT NO.
1393229

TITLE AND LOCATION
P1396B SOF INTEL OPS EXPANSION - PHASE II

CONTRACTOR

ACTIVITY NO	TRANSMITTAL NO	SPEC SECT	DESCRIPTION ITEM SUBMITTED	PARAGRAPH #	CLASSIFICATION	GOVT OR A/E REVWR	CONTRACTOR: SCHEDULE DATES			CONTRACTOR ACTION			APPROVING AUTHORITY					
							SUBMIT	APPROVAL NEEDED BY	MATERIAL NEEDED BY	ACTION CODE	DATE OF ACTION	DATE FWD TO APPR AUTH/ DATE RCD FROM CONTR	DATE FWD TO OTHER REVIEWER	DATE RCD FROM OTH REVIEWER	ACTION CODE	DATE OF ACTION	MAILED TO CONTR/ DATE RCD FRM APPR AUTH	REMARKS
(a)	(b)	(c)	(d)	(e)	(f)		(g)	(h)	(i)	(j)	(k)	(l)	(m)	(n)	(o)	(p)	(q)	(r)
		33 40 00	Frame and Cover for Gratings	2.3.7														
			LEED Documentation	1.3.2	G													
		33 71 01	SD-03 Product Data															
			Cutouts	2.8	G													
			Surge arresters	2.7	G													
			Anchors	2.5														
			SD-06 Test Reports															
			Field Quality Control	3.2	G													
			Ground resistance test reports	1.5.4	G													
			SD-07 Certificates															
			Public Utility - Electrical	1.5.1	G													
			Contractor's License															
			SD-10 Operation and Maintenance															
			Data															
			Operation and Maintenance	1.6.1	G													
			Manuals															
		33 71 02	SD-02 Shop Drawings															
			Precast underground structures	1.4.2	G													
			SD-03 Product Data															
			Medium voltage cable	2.5	G													
			Medium voltage cable	2.6	G													
			terminations															
			Precast concrete structures	2.13.2.1	G													
			Sealing Material	2.13.2.4														
			Handhole frames and covers	2.13.3	G													
			Composite/fiberglass handholes	2.13.4	G													

SUBMITTAL REGISTER

CONTRACT NO.
1393229

TITLE AND LOCATION
P1396B SOF INTEL OPS EXPANSION - PHASE II

CONTRACTOR

ACTIVITY NO	TRANSMITTAL NO	SPEC SECT	DESCRIPTION ITEM SUBMITTED	PARAGRAPH #	CLASSIFICATION	GOVT OR A/E REVWR	CONTRACTOR: SCHEDULE DATES			CONTRACTOR ACTION			APPROVING AUTHORITY					
							SUBMIT	APPROVAL NEEDED BY	MATERIAL NEEDED BY	ACTION CODE	DATE OF ACTION	DATE FWD TO APPR AUTH/ DATE RCD FROM CONTR	DATE FWD TO OTHER REVIEWER	DATE RCD FROM OTH REVIEWER	ACTION CODE	DATE OF ACTION	MAILED TO CONTR/ DATE RCD FRM APPR AUTH	REMARKS
(a)	(b)	(c)	(d)	(e)	(f)		(g)	(h)	(i)	(j)	(k)	(l)	(m)	(n)	(o)	(p)	(q)	(r)
		33 71 02	SD-06 Test Reports															
			Medium voltage cable	2.15.1	G													
			qualification and production tests															
			Field Acceptance Checks and	3.17.1	G													
			Tests															
			Cable Installation Plan and	3.3														
			Procedure															
			SD-07 Certificates															
			Public Utility - Electrical	1.4.1	G													
			Contractor's License															
			Cable splicer/terminator	1.4.3	G													
			Cable Installer Qualifications	1.4.4	G													
			Certificate of Conformance	1.4.5	G													
		33 82 00	SD-02 Shop Drawings															
			Telecommunications Outside	1.6.1.1	G													
			Plant															
			Telecommunications Entrance	1.6.1.2	G													
			Facility Drawings															
			SD-03 Product Data															
			Wire and cable	2.8	G													
			Cable splices, and connectors	2.5	G													
			Closures	2.3	G													
			Building protector assemblies	2.2.1	G													
			Protector modules	2.2.2	G													
			Cross-connect terminal cabinets	2.4	G													
			Spare Parts	1.8.2	G													

SUBMITTAL REGISTER

CONTRACT NO.
1393229

TITLE AND LOCATION
P1396B SOF INTEL OPS EXPANSION - PHASE II

CONTRACTOR

ACTIVITY NO	TRANSMITTAL NO	SPEC SECT	DESCRIPTION ITEM SUBMITTED	PARAGRAPH #	CLASSIFICATION	GOVT OR A/E REVWR	CONTRACTOR: SCHEDULE DATES			CONTRACTOR ACTION			APPROVING AUTHORITY					
							SUBMIT	APPROVAL NEEDED BY	MATERIAL NEEDED BY	ACTION CODE	DATE OF ACTION	DATE FWD TO APPR AUTH/ DATE RCD FROM CONTR	DATE FWD TO OTHER REVIEWER	DATE RCD FROM OTH REVIEWER	ACTION CODE	DATE OF ACTION	MAILED TO CONTR/ DATE RCD FRM APPR AUTH	REMARKS
(a)	(b)	(c)	(d)	(e)	(f)		(g)	(h)	(i)	(j)	(k)	(l)	(m)	(n)	(o)	(p)	(q)	(r)
		33 82 00	SD-06 Test Reports															
			Pre-installation tests	3.5.1	G													
			Acceptance tests	3.5.2	G													
			Outside Plant Test Plan	1.6.3	G													
			SD-07 Certificates															
			Telecommunications Contractor	1.6.2.1	G													
			Key Personnel	1.6.2.2	G													
			Manufacturer's Qualifications	1.6.2.3	G													
			SD-08 Manufacturer’s Instructions															
			Building protector assembly	2.2.1	G													
			installation															
			Cable tensions	3.1.8.1	G													
			Fiber Optic Splices	3.1.10.2	G													
			SD-09 Manufacturer’s Field															
			Reports															
			Factory Reel Test Data	2.16.1	G													
			SD-10 Operation and Maintenance															
			Data															
			Telecommunications outside	1.6.1.1	G													
			plant (OSP)															
			SD-11 Closeout Submittals															
			Record Documentation	1.8.1	G													

THIS PAGE HAS BEEN INTENTIONALLY LEFT BLANK

SECTION 01 33 29

SUSTAINABILITY REPORTING
02/15

PART 1 GENERAL

1.1 REFERENCES

The publications listed below form a part of this specification to the extent referenced. The publications are referred to within the text by the basic designation only.

AMERICAN SOCIETY OF HEATING, REFRIGERATING AND AIR-CONDITIONING ENGINEERS (ASHRAE)

ASHRAE 189.1	(2011; Errata 1-2 2012; INT 1 2013; Errata 3-8 2013) Standard for the Design of High-Performance Green Buildings Except Low-Rise Residential Buildings

SHEET METAL AND AIR CONDITIONING CONTRACTORS' NATIONAL ASSOCIATION (SMACNA)

ANSI/SMACNA 008	(2007) IAQ Guidelines for Occupied Buildings Under Construction, 2nd Edition

U.S. DEPARTMENT OF ENERGY (DOE)

ISWG Guiding Principles	(2008) High Performance and Sustainable Buildings Guidance

U.S. GREEN BUILDING COUNCIL (USGBC)

LEED GBDC Ref Guide	(2009; R 2010) LEED Reference Guide for Green Building Design, Construction and Major Renovations of Commercial and Institutional Buildings including Core & Shell and K-12 Projects

U.S. NATIONAL ARCHIVES AND RECORDS ADMINISTRATION (NARA)

40 CFR 247	Comprehensive Procurement Guideline for Products Containing Recovered Materials

1.2 SUMMARY

This specification includes general requirements and procedures for this project to be constructed and documented per the federally mandated "Guiding Principles" (GP), Third Party Certification (TPC) requirements (if applicable), UFC 1-200-02, High Performance and Sustainable Building Requirements, and other requirements identified in this specification.

1.3 SUBMITTALS

Government approval is required for submittals with a "G" designation; submittals not having a "G" designation are for Contractor QC approval. Submittals with an "S" are for inclusion in the Sustainability Notebook, in

conformance to this section. Submit the following in accordance with Section 01 33 00 SUBMITTAL PROCEDURES:

SD-01 Preconstruction Submittals

Preliminary Sustainability Notebook; G

Preliminary High Performance and Sustainable Building Checklist

SD-07 Certificates

Third Party Certification (TPC)

SD-11 Closeout Submittals

Final Sustainability Notebook; G

Final High Performance and Sustainable Building Checklist; G

Amended Final Sustainability Notebook; G

Third Party Certification Plaque and Certificates; G

1.4 GUIDING PRINCIPLES VALIDATION (GPV)

Provide construction related sustainability documentation to verify achievement of ISWG Guiding Principles Validation (GPV). Provide the following for GPV:

a. Refer to Attachment 1, HPSB Checklist at the end of this specification section.

b. Obtain approval of any changes to the HPSB Checklist from the Contracting Officer at the Preconstruction Conference. Contracting Officer's approval establishes identified ISWG Guiding Principles Requirements as the project's sustainability goals.

No variations or substitutions to the HPSB Checklist are allowed without written consent from the Contracting Officer. Immediately bring to the attention of the Contracting Officer any changes that impact meeting the approved ISWG Guiding Principles Requirements for this project and demonstrate that change will not incur additional construction cost or increase the life cycle cost.

c. Include all work required to incorporate the applicable ISWG Guiding Principles Requirements indicated on the HPSB Checklist and in this contract.

d. Include construction related documentation to maintain an up-to-date Sustainability Notebook. Supplement construction related documentation containing the following components;

(1) HPSB Checklist

(2) Sustainability Action Plan

(3) Documentation illustrating Guiding Principle (GP) Requirements compliance

(4) Commissioning Plan and Reports

1.4.1 Sustainability Action Plan

Include the following information in the Sustainability Action Plan:

a. Contractor's planned method to achieve each construction related GP requirement.

b. For each designated construction related ISWG Guiding Principles Requirements that is not achieved, provide narrative explaining how mission or activity precludes achieving specific sustainability requirement or goal. Provide analysis of particular requirement and level to which project is able to comply.

c. Name and contact information for: Contractor's POC responsible for ensuring sustainability goals are accomplished and documentation is assembled.

1.4.2 Costs

Contractor is responsible for all costs associated with constructing and demonstrating that project complies with approved ISWG Guiding Principles Requirements.

1.4.3 Calculations

Provide calculations, product data, and certifications required in this section to demonstrate compliance with the ISWG Guiding Principles Requirements.

1.4.4 Third Party Certification (TPC) Documentation

This project has been designed for, and must be constructed to attain a sustainability rating of LEED GBDC Ref Guide Silver. Project is already registered with the TPC Organization. Provide construction related sustainability documentation, in the format required by the TPC Organization, to the Contracting Officer for approval, and for final approval by the TPC organization. Third Party Certification is met when Government receives TPC organization certificate and plaque. Include the following:

a. Refer to Attachment 2, TPC Checklist at the end of this specification section.

b. Obtain approval of the TPC Checklist from the Contracting Officer at the Pre-Construction Conference.

No variations or substitutions to the approved TPC checklist are allowed without written consent from the Contracting Officer. Immediately bring to the attention of the Contracting Officer any project changes that impact meeting the approved TPC Requirements for this project. Demonstrate that change will not: incur additional construction cost; increase the life cycle cost; impact previous TPC Design Review; or impact required TPC certification level.

c. Complete all work required to incorporate the applicable TPC Requirements.

d. Maintain the construction related information, and provide replacement pages, in the Sustainability Notebook pertaining to additions and changes to the approved sustainability requirements. The Sustainability Notebook is in electronic format and is explained in the paragraph entitled "SUSTAINABILITY NOTEBOOK". The Sustainability Notebook contains the following components in addition to the GPV components above:

(1) TPC Checklist

(2) Sustainability Action Plan

(3) Completed TPC documentation for each identified prerequisite and credit. Upload onto the TPC Online documentation website.

(4) Copy of all correspondence with the TPC organization.

e. Include the following information in the Sustainability Action Plan. Provide this TPC information in addition to the GPV Action Plan items above:

(1) Contractor's planned method to achieve each TPC requirement.

(2) For each required TPC credit that is attempted but not achieved, provide narrative explaining how mission or activity precludes achieving specific sustainability requirement or goal. Provide analysis of particular requirement and level to which project is able to comply.

(3) Provide the commissioning plan and schedule for performance testing.

(4) Name and contact information for: Contractor's Sustainability POC and other names of sustainability professionals on the Contractor's Staff responsible for ensuring TPC sustainability goals are accomplished and documentation is assembled. Contractor's Sustainability POCs are also responsible for ensuring GPV required in paragraph GUIDING PRINCIPLES VALIDATION (GPV) above.

f. Contractor is responsible for all costs associated with constructing and demonstrating that project complies with approved TPC requirements, including but not limited to:

(1) TPC coordination with Government's AE and other consultants, TPC website requirements, and management for construction related documentation.

(2) Construction work required to incorporate TPC prerequisites and credits.

(3) Submittals required to demonstrating compliance with Government approved TPC checklists.

g. Provide all calculations, product data, and certifications required in this contract to demonstrate compliance with the TPC Requirements of this section.

1.4.5 Third Party Certification (TPC)

Contractor is responsible for registering and meeting all requirements to achieve Third Party Certification (TPC) level of LEED GBDC Ref Guide Silver, or other Government-approved equivalent TPC sustainability certification. An equivalent TPC organization must demonstrate equivalency for Government consideration, prior to use on the project. Third Party Certification is met when Government receives TPC organization certificate and plaque.

Register project with TPC organization using the following format and content:

a. Project Title First Line: US Army, US Air Force, US Navy or US Marine Corps, Building Name (if known)

b. Project Title Second Line: MILCON P#, DD1391 Project Name

c. Project Address: UIC (Installation code), Category code, RPUID (Real Property Unique Identifier) Number

d. Project Owner Organization: US Army, US Air Force, US Navy or US Marine Corps

e. Primary Contact, Owner: Agency Project Manager

f. Additional Contact, Building Owner: Public Works Officer or Designee

Project is already registered with TPC organization to achieve level of LEED GBDC Ref Guide Silver. The TPC Online management will be turned over to the Contractor, who will assume full responsibility for management and obtaining Final Certification. Third Party Certification is met when Government receives TPC organization certificate and plaque.

The TPC Certification requires the following:

a. Refer to Attachment 2, TPC Checklist at the end of this specification section.

b. Obtain approval of the TPC Checklist from the Contracting Officer at the Pre-Construction Conference.

   No variations or substitutions to the approved TPC checklist are allowed without written consent from the Contracting Officer. Immediately bring to the attention of the Contracting Officer any project changes that impact meeting the approved TPC Requirements for this project. Demonstrate that change will not: incur additional construction cost; increase the life cycle cost; impact previous TPC Design Review; or impact required TPC certification level.

c. Complete all work required to incorporate the applicable TPC Requirements.

d. Maintain the construction related information, and provide replacement pages, in the Sustainability Notebook pertaining to additions and changes to the approved sustainability requirements. The Sustainability Notebook is in electronic format and is explained in the paragraph entitled "SUSTAINABILITY NOTEBOOK". The Sustainability Notebook contains the following components in addition to the GPV

components above:

(1) TPC Checklist

(2) Completed TPC Online forms for each identified prerequisite and credit

(3) Copy of all correspondence with the TPC organization including proof of TPC registration

(4) Documentation illustrating compliance with TPC requirements

(5) TPC Award Certificate

e. Include the following information in the Sustainability Action Plan. Provide this TPC information in addition to the GPV Action Plan items above:

(1) Contractor's planned method to achieve each TPC requirement.

(2) For each required TPC credit that is attempted but not achieved, provide narrative explaining how mission or activity precludes achieving specific sustainability requirement or goal. Provide analysis of particular requirement and level to which project is able to comply.

(3) Name and contact information for: Contractor's Sustainability POC and other names of sustainability professionals on the Contractor's Staff responsible for ensuring TPC sustainability goals are accomplished and documentation is assembled

(4) Provide the plan and schedule for performance testing, data collection, and commissioning.

f. Contractor is responsible for all costs associated with constructing and demonstrating that project complies with approved TPC requirements, including but not limited to:

(1) Final TPC review, certification and plaque fees

(2) Online (or offline with secure facilities) TPC management and documentation.

(3) Obtaining TPC certification based on Government-approved sustainability goals.

(4) Construction work required to incorporate TPC prerequisites and credits.

(5) Submittals required to demonstrate compliance with Government approved TPC checklists.

g. Provide all calculations, product data, and certifications required in this specification to demonstrate compliance with the TPC Requirements.

h. Provide all online (or offline, with secure facilities) TPC management and documentation.

i. Contractor is responsible for all required responses to TPC.

j. Provide TPC Plaque and Certificates. Use format below to create the Plaque, Certificate and Letter of Congratulations. Forward to parties designated by Contracting Officer:

(1) Plaque:

Name: Final Building Name. If unknown, provide Form DD1391 Project Name.

(2) Certificate:

Project Title, first line: P-(X); Form DD1391 Project Name).

Project Title, second line: UIC (Installation code)

(3) Letter Congratulations:

Address letter to Facility's Installation commander Name. Address the letter to an individual person.

1.5 SUSTAINABILITY SUBMITTALS

Provide documentation in the Sustainability Notebook and the HPSB Checklist to indicate compliance with the sustainability requirements of the project.

1.5.1 "S" Submittals for Sustainability Documentation

Submit the GPV and TPC sustainability documentation required in this specification as "S" submittals. Highlight GPV and TPC compliance data in "S" submittal.

1.5.2 SUSTAINABILITY NOTEBOOK

Provide and maintain a comprehensive Sustainability Notebook to document compliance with the sustainability requirements identified in the approved HPSB and TPC Checklists. Sustainability Notebook must contain all required data to support full compliance with the ISWG Guiding Principles Requirements and TPC requirements. Sustainability Notebook is in the form of an Adobe PDF file; bookmarked at each ISWG Guiding Principles Requirement , TPC requirement,and sub-bookmarked at each document. Match format to ISWG Guiding Principles numbering system indicated herein. Maintain up to date information, spreadsheets, templates, and other required documentation with each current submittal. For TPC projects, provide a second Table of contents using TPC numbering system. Locate documentation unique to TPC here. Where TPC documentation would repeat GP documentation, insert note referring reviewer to GP documentation.

Contracting Officer may deduct from the monthly progress payment accordingly if Sustainability Notebook information is not current, until information is updated and on track per project goals.

1.5.2.1 Sustainability Notebook Submittal Schedule

Provide Sustainability Notebook Submittals at the following milestones of the project:

a. Preliminary Sustainability Notebook

Submit preliminary Sustainability Notebook for approval at the Pre-construction conference. Include Preliminary High Performance and Sustainable Building Checklist.

b. Construction Progress Meetings. Update GP and TPC documentation in the Sustainability Notebook and TPC Online tool for each meeting.

c. Final Sustainability Notebook

Submit updated Sustainability Notebook within 60 days after the Beneficial Occupancy Date (BOD). Final progress payment retainage may be held by Contracting Officer until final sustainability documentation is complete. Submit three (3) electronic copies of the Final Sustainability Notebook on DVDs to the Government. Include Final High Performance and Sustainable Building Checklist.

d. Amended Final Sustainability Notebook

Amend and resubmit the Final Sustainability Notebook to include commissioning, testing and balancing, and collection of performance requirements. Submit three (3) final electronic copies of the Amended Final Sustainability Notebook Submittal on DVDs to the Government no longer than 30 days after the GP, TPC, and Cx designated data collection period.

1.5.3 HIGH PERFORMANCE SUSTAINABLE BUILDING (HPSB) CHECKLIST

Provide construction documentation that provides proof of and supports compliance with the completed HBSP Checklist.

1.5.3.1 HPSB Checklist Submittals

Submit an updated copy of the HPSB Checklist with each Sustainability Notebook submittal. Attach HPSB Checklist to DD1354 Real Property Record Submittal.

1.5.3.2 HPSB Checklist Public Access

Where not included as attachment to this specification section, use the following as HPSB Checklist for respective service branch. Where Internet address appears on two lines, copy full address into Internet browser.

a. Air Force - Air Force MILCON Sustainability Requirements Scoresheet, Attachment 3 of "AF Sustainable Design Development Implementing Guidance Memo"
http://www.wbdg.org/ccb/browse_cat.php?c=265

b. Army - Energy & Sustainability Record Card
http://wbdg.org/ccb/ARMYCOE/COEECB/ecb_2013_25.pdf

c. Navy - NAVFAC Sustainability & Energy Data Record Card/High Performance and Sustainable Building Checklist
http://www.wbdg.org/pdfs/navfac_sustainable_energy_data_record_card.pdf

1.6 DOCUMENTATION REQUIREMENTS

Third Party Certification requirements or credits are mandatory when they have requirements that match a Guiding Principle Requirement. Documentation used to demonstrate TPC compliance may be used to demonstrate GP compliance.

Incorporate each of the following ISWG Guiding Principles Requirements into project construction; and provide documentation that proves compliance with each listed requirement. Items below are organized according to the ISWG Guiding Principles. For projects that require TPC, refer to Third Party Certifier's reference manuals for TPC requirements.

1.6.1 Commissioning

Work with the Commissioning Authority (CxA) to achieve requirements of the Commissioning plan and other contract document requirements at each stage of commissioning. Maintain up-to-date records of commissioning activities in the Sustainability Notebook, to include commissioning plan and summary commissioning report.

1.6.2 Energy Efficient Equipment

Provide only energy-using equipment that is Energy Star rated, or has the Federal Energy Management Program (FEMP) recommended efficiency. Where Energy Star or FEMP recommendations have not been established, provide equipment with efficiency in the top 25 percent for the type of equipment procured. Provide only energy using equipment that meets FEMP requirements for low standby power consumption. Energy efficient equipment can be found at: http://www1.eere.energy.gov/femp/ and http://www.energystar.gov/. Provide the following documentation:

Proof that equipment is energy efficient and complies with the cited requirements.

1.6.3 Benchmarking

Provide report of initial actual energy performance with the energy design targets. Provide the following documentation:

Prefinal Performance Report with data collected from the first 60 days of operation of the facility after Beneficial Occupancy Date (BOD). Submit this information with the Final Sustainability Notebook Submittal.

1.6.4 Reduce Volatile Organic Compounds (VOC)

Provide materials and products with low pollutant emissions, including composite wood products, adhesives, sealants, interior paints and finishes, carpet systems, and furnishings. Meeting the requirements of ASHRAE 189.1 Sections 8.4.2 (Prescriptive Option: Materials) or Section 8.5.2 (Performance Option: Materials) demonstrates compliance. Provide the following documentation:

a. Demonstrate that materials do not exceed maximum VOC emissions of cited standards. VOC averaging is allowed where coatings are subject to human contact or harsh environmental conditions.

b. Demonstrate that flooring materials comply with VOC emissions of cited standards.

c. Demonstrate that composite wood and agrifiber products and associated laminating adhesives contain no added urea-formaldehyde.

d. Demonstrate that furniture and seating complies with low emissions requirements.

e. Create and maintain a list of above listed products used on the project within the building vapor barrier. Demonstrate how product meets cited standards.

1.6.5 Indoor Air Quality During Construction

Prior to construction, create indoor air quality plan. Implement IAQ plan during construction and flush building air before occupancy.

a. Construction submittal documentation required:

(1) For new construction and for renovation of unoccupied existing buildings, comply with ASHRAE 189.1 Section 10.3.1.4. (Indoor Air Quality (IAQ) Construction Management), with maximum outdoor air consistent with achieving relative humidity no greater than 60 percent. For renovation of occupied existing buildings, comply with ANSI/SMACNA 008 IAQ Guidelines for Occupied Buildings Under Construction.

(2) Provide required documentation showing that after construction ends and prior to occupancy, new HVAC filters were installed, and building air was flushed out in accordance with UFC 1-200-02.

1.6.6 Recycled Content

Provide materials on this project with aggregated total recycled content greater than 10 percent. In addition, comply with 40 CFR 247. Refer to http://www.epa.gov/cpg/products.htm for assistance identifying products cited in 40 CFR 247. Provide the following documentation:

a. Total amount of recycled content contained in building materials as a percentage of total cost of all building materials on the project (mechanical, electrical, and plumbing components, fire protection equipment and transportation are excluded).

b. Substitutions: Contractor may submit for Government approval, proposed alternative products or systems that provide equivalent performance and appearance and have greater contribution to project recycled content requirements. For all such proposed substitutions, submit with the Sustainability Action Plan accompanied by product data demonstrating equivalence.

1.6.7 Bio-Based Products

Utilize products and material made from biobased materials to the maximum extent possible without jeopardizing the intended end use or detracting from the overall quality delivered to the end user. Use only supplies and materials of a type and quality that conform to applicable specifications and standards.

Biobased products that are designated for preferred procurement under the USDA BioPreferred Program must meet the required minimum biobased content. Refer to http://www.biopreferred.gov for the product categories and BioPreferred Catalog. Provide the following documentation:

a. For biobased products used on this project, provide biobased content and biobased source of material. Indicate name of the manufacturer, cost of each product and the use of each product on this project.

1.6.8 Landfill Disposal

Divert construction debris from landfill disposal in accordance with Section 01 74 19 CONSTRUCTION AND DEMOLITION WASTE MANAGEMENT. Provide the following documentation:

a. Documentation showing total amount of construction debris diverted from landfill as a percentage of all construction debris on the project.

b. Include project's Construction Waste Management Plan and all dumpster haul tickets.

1.6.9 Ozone Depleting Substances

Eliminate the use of ozone depleting substances during and after construction where alternative environmentally preferable products are available. Meet the requirements of ASHRAE 189.1 Section 9.3.3 Refrigerants for no CFC-based refrigerants in heating ventilation, air conditioning and refrigeration systems (except for fire suppression system requirements, covered elsewhere in this specification). Provide the following documentation:

a. MSDS sheets for all refrigerants provided

b. Products that meet the criteria of U.S. EPA Significant New Alternatives Policy, available at http://www.epa.gov/ozone/snap/index.html.

1.6.10 Validation and Certification Restrictions

The Contractor's purchase of renewable energy certificates (RECs) specifically to meet project sustainability goals is prohibited.

PART 2 PRODUCTS

Not used.

PART 3 EXECUTION

3.1 SUSTAINABILITY COORDINATION

3.1.1 Coordinating Sustainability Documentation Progress

Provide sustainability focus and coordination at the following meetings to achieve sustainability goals. Contractor's designated TPC accredited sustainability professional responsible for GP and TPC documentation must participate in the following meetings to coordinate documentation completion.

a. Pre-Construction Conference: Discuss the following: TPC and HPSB Checklist, Sustainability Action Plan, Construction submittal requirements and schedule, individuals responsible for achieving each Guiding Principle Requirement and TPC prerequisite and credit.

b. Construction Progress Meetings: Review GP and TPC sustainability requirements with project team including contractor and sub-contractor representatives. Demonstrate GP and TPC documentation is being collected and updated to the Sustainability Notebook and TPC Online

tool.

(1) Facility Turnover Meetings: Review Sustainability Notebook, and TPC Online submission for completeness and identify any outstanding issues relating to final documentation requirements.

(2) Final Sustainability Notebook Review

3.2 SUSTAINABILITY AWARD

Finalize the sustainability certification process and obtain the TPC Certification Plaque and Certificates, indicating completion of the projects sustainability goals.

3.2.1 Third Party Certification Plaque and Certificates

Obtain and install plaque and provide one original framed copy of the certificate. Mount certificates in 1 inch deep metal frames, with double matt, and wire hangers. Obtain three additional certificates, and deliver to Contractor Officer, unless otherwise instructed. Hang the Plaque in a prominent interior location approved by the Contracting Officer.

-- End of Section --

NAVFAC SUSTAINABILITY AND ENERGY DATA --- *NEW CONSTRUCTION & MAJOR RENOVATION*

PROJECT INFORMATION

Work Order No.: _____ FY _____ MILCON P No. / Customer Reference No.: _____

Project Title: _____

Location/UIC: _____

NAVFAC Project Manager: _____ Project Dollar Amount $: _____

Project Type: _____ Project Design Level: _____

Facility Area: _____ U/M: _____ Category Code: _____ Facility #: _____

AE Contract # & T.O. _____ AE Firm Sustainability Coordinator: _____

AE Firm Name: _____

Project Phase: ☐ Solicitation Documents Complete (Draft) ☐ Construction Complete (Final)

Construction Contract & T.O. _____ Award Date (P/A): _____ BOD (P/A): _____

Construction Contractor: _____

Contractor's Sustainability Coordinator: _____

SUSTAINABILITY DATA - GUIDING PRINCIPLES for SUSTAINABLE NEW CONSTRUCTION and MAJOR RENOVATION

Use this form to collect design and as-constructed project information to be recorded on the Sustainable and Energy Tab in eProjects

Provide justification for each target missed:

Sustainability Third Party Rating System: ☐ USGBC LEED ☐ GBI Green Globes ☐ Not Applicable ☐ Other

A Sustainability Certification Level - Target
☐ LEED Silver ☐ 2 Globes ☐ Other

Identify "Other" certification system and target level

B Sustainability Certification Level - Achieved
☐ LEED Certified ☐ LEED Silver ☐ LEED Gold ☐ LEED Platinum ☐ Not Met
☐ 1 Globe ☐ 2 Globes ☐ 3 Globes ☐ 4 Globes ☐ Other

Identify "Other" certification system and level achieved

I. Employ Integrated Design Principles

I.a Integrated Assessment, Operation, and Management ☐ Included ☐ Not Included

I.b Commissioning (Select one)
☐ Commissioning ☐ No Commissioning

Systems Commissioned:

II. Optimize Energy Performance

II.a Energy Efficiency

i Energy Reduction 30% target _____

ii Efficiency Standard
☐ 90.1 - 2004 ☐ 90.1 - 2007 ☐ 90.1 - 2010

a. Total Design Energy Use Intensity (EUI): kBTU/Sq Ft/Year

iii New Technology: Provide description

II.b On-Site Renewable Energy

i. Solar Hot Water 30% target _____

ii. Renewable energy technology types (select all that apply)
☐ Daylighting ☐ Ground Source Heat Pumps ☐ Solar Photovoltaic
☐ Geothermal ☐ Mechanical (i.e., direct water pumping) ☐ Solar Thermal -domestic hot water
☐ Wind ☐ Solar Thermal -space conditioning

iii. Sustainable Roof Attribute (Select all that apply)
☐ Cool - white ☐ Cool - reflective ☐ Solar PV ☐ Solar Thermal ☐ Vegetated

II.c Building-level Metering (Measurement) ☐ Included ☐ Not Included

III. Protect and Conserve Water

III.a Indoor Water

i Reduce potable water _____

ii Building-level Metering (Measurement) ☐ Included ☐ Not Included

a. Total Design Indoor Water Use Intensity (WUI): Gallons/Sq Ft/Year _____

III.b Outdoor Water

i Reduce landscape water ☐ 50% below conventional ☐ 100% ☐ Not Met

IV. Enhance Indoor Environmental Quality

IV.a Ventilation and Thermal Comfort

i Thermal Environmental Conditions ☐ Met ☐ Not Met

ii Ventilation ☐ Met ☐ Not Met

IV.b Moisture Control Plan ☐ Included ☐ Not Included

IV.c Daylighting

i Minimum Daylight ☐ Met ☐ Not Met

ii Automatic dimming controls ☐ Included ☐ Not Included

IV.d Low-Emitting Materials ☐ Met ☐ Not Met

NAVFAC SUSTAINABILITY AND ENERGY DATA --- *NEW CONSTRUCTION & MAJOR RENOVATION*

IV.e Protect Indoor Air Quality during Construction ☐ Met ☐ Not Met

V. Reduce Environmental Impact of Materials

V.a Recycled Content: www.epa/gov/cpg ☐ Met ☐ Not Met

V.b Biobased Products ☐ Met ☐ Not Met

V.c Waste and Materials Management

i. Waste Diversion (50% targett) 0%

ii. Waste Management ☐ Included ☐ Not Included

V.d Ozone Depleting Compounds ☐ Met ☐ Not Met

To maintain prior project sustainability information, print and upload a copy of the completed worksheet to the Notes tab as Design & Criteria note BEFORE updating the tab.

GUIDANCE ON CALCULATION FOR EUI & WUI

1 The EUI must be calculated as the total Design Energy Consumption per year (including savings from renewables) divided by the total Building Area (including unconditioned indoor space).

a. The total Design Energy Consumption can be found in the Energy Cost Budget (ECB) Compliance Report. The Design Energy Consumption is in the Energy Summary by End Use Table at the bottom of page 2 of the ECB Report. The value is listed as Total Including Solar for the Proposed Building. It is the first field on the bottom row. (Units in the ECB Report are 10^6 Btu/yr, so multiply by 1000 to yield kBtu/yr

b. The total Building Area (including unconditioned indoor spaces) can be found in the Energy Cost Budget (ECB) Compliance Report in the Space Summary Table on page 1 of the ECB Report. The value is listed as Total (area) including Conditioned area and Unconditioned area. Insure the units are in square feet

2 The WUI must be calculated as the total Design Indoor Potable Water Consumption per year divided by the total Building Area (including unconditioned space).

a. The total Design Water Consumption can be found in the LEED WE P1 water consumption calculation *or* Green Globes 3.4.1.1 Water Consumption calculation. The value is the Design Case – Annual Potable Water Consumption. It is listed in units of Gallons/year

b. The total Building Area (including unconditioned spaces) can be found in the Energy Cost Budget (ECB) Compliance Report in the Space Summary Table on page 1 of the ECB Report. The value is listed as Total (area) including Conditioned area and Unconditioned area. Insure the units are in square feet

NAVFAC SUSTAINABILITY AND ENERGY DATA -- *RENOVATIONS >$2.5M &<50% PRV; OR ENERGY*

PROJECT INFORMATION

Work Order No.: _____ Budget FY _____ Customer Reference No.: _____
Project Title: _____
Location/UIC: _____
NAVFAC Project Manager: _____ Estimated Cost/PA: _____
Project Type: _____ Project Design Level: _____
Facility Area: _____ U/M: _____ Category Code: _____ Facility #: _____
AE Contract # & T.O. _____ AE Firm Sustainability Coordinator: _____
AE Firm Name: _____
Project Phase: ☐ Solicitation Documents Complete (Draft) ☐ Construction Complete (Final)
Construction Contract & T.O. _____ Award Date (P/A): _____ BOD (P/A): _____
Construction Contractor: _____
Contractor's Sustainability Coordinator: _____

SUSTAINABILITY DATA - GUIDING PRINCIPLES for SUSTAINABLE EXISTING BUILDINGS

Use this form to collect design and as-constructed project information to be recorded on the Sustainable and Energy Tab in eProjects.

Provide justification for each target missed:

I. Employ Integrated Assessment, Operation, and Management Principles
- I.a Integrated Assessment, Operation, and Management ☐ Included ☐ Not Included
- I.b Commissioning (Select one)
  - ☐ Commissioning ☐ No Commissioning
  - ☐ Re-Commissioning ☐ Retro-Commissioning

Systems Commissioned

II. Optimize Energy Performance
- II.a Energy Efficiency
  - i Energy Reduction Below Baseline (20% target) _____ %
  - ii Efficiency Standard (Select one)
    - ☐ Energy Star 75 or higher ☐ Building Baseline 2003
    - ☐ ASHRAE 90.1-2007 ☐ ASHRAE 90.1-2010
    - a. Total Design Energy Use Intensity (**EUI**): kBTU/Sq Ft/Year
  - iii New Technology: Provide description
- II.b On-Site Renewable Energy
  - i. Solar Hot Water Demand (30% target)
  - ii. Renewable energy technology types (Select all that apply)
    - ☐ Daylighting ☐ Ground Source Heat Pumps ☐ Solar Photovoltaic
    - ☐ Geothermal ☐ Mechanical (i.e., direct water pumping) ☐ Solar Thermal -domestic hot water
    - ☐ Wind ☐ Solar Thermal -space conditioning
  - iii. Sustainable Roof Attribute (Select all that apply)
    - ☐ Cool - white ☐ Cool - reflective ☐ Solar PV ☐ Solar Thermal ☐ Vegetated
- II.c Building-level Metering (Measurement) ☐ Included ☐ Not Included

III. Protect and Conserve Water
- III.a Reduce Indoor Water
  - i Choose Option (Select one)
    - ☐ 20% below IPC or IBC ☐ 20% below bldg baseline 2003
  - ii Reduce potable water (percent) _____ %
  - ii Building-level Metering (Measurement) ☐ Included ☐ Not Included
    - a. Total Design Indoor Water Use Intensity (**WUI**): Gallons/Sq Ft/Year
- III.b Reduce landscape water (Select one) ☐ 50% below conventional ☐ 50% below building baseline 2003 ☐ 100%

IV. Enhance Indoor Environmental Quality
- IV.a Ventilation and Thermal Comfort
  - i Thermal Environmental Conditions ☐ Met ☐ Not Met
  - ii Ventilation ☐ Met ☐ Not Met
- IV.b Moisture Control Plan ☐ Included ☐ Not Included
- IV.c Daylighting and Lighting Controls
  - i Daylighting and lighting controls (Select one) ☐ 2% in 50% of occupied spaces ☐ Not Met
    ☐ 50% occupant control
  - ii Automatic lighting controls ☐ Included ☐ Not Included
- IV.d Low-Emitting Materials ☐ Met ☐ Not Met
- IV.e Protect Indoor Air Quality during Construction ☐ Met ☐ Not Met

V. Reduce Environmental Impact of Materials
- V.a Recycled Content: www.epa/gov/cpg ☐ Met ☐ Not Met
- V.b Biobased Products ☐ Met ☐ Not Met
- V.c Waste and Materials Management
  - i Waste Diversion - 50% target 0% %
  - ii Waste Management ☐ Included ☐ Not Included
- V.d Ozone Depleting Compounds ☐ Met ☐ Not Met

To maintain prior project sustainability information, print and upload a copy of the completed worksheet to the Notes tab as Design & Criteria note BEFORE updating the tab.

GUIDANCE ON CALCULATION FOR EUI & WUI

1 The **EUI** must be calculated as the total Design Energy Consumption per year (including savings from renewables) divided by the total Building Area (including unconditioned indoor space).

a. The total Design Energy Consumption can be found in the Energy Cost Budget (ECB) Compliance Report. The Design Energy Consumption is in the Energy Summary by End Use Table at the bottom of page 2 of the ECB Report. The value is listed as Total Including Solar for the Proposed Building. It is the first field on the bottom row. (Units in the ECB Report are 10^6 Btu/yr, so multiply by 1000 to yield kBtu/yr

b. The total Building Area (including unconditioned indoor spaces) can be found in the Energy Cost Budget (ECB) Compliance Report in the Space Summary Table on page 1 of the ECB Report. The value is listed as Total (area) including Conditioned area and Unconditioned area. Insure the units are in square feet

2 The **WUI** must be calculated as the total Design Indoor Potable Water Consumption per year divided by the total Building Area (including unconditioned space).

a. The total Design Water Consumption can be found in the LEED WE P1 water consumption calculation *or* Green Globes 3.4.1.1 Water Consumption calculation. The value is the Design Case – Annual Potable Water Consumption. It is listed in units of Gallons/year

b. The total Building Area (including unconditioned spaces) can be found in the Energy Cost Budget (ECB) Compliance Report in the Space Summary Table on page 1 of the ECB Report. The value is listed as Total (area) including Conditioned area and Unconditioned area. Insure the units are in square feet

LEED 2009 for New Construction and Major Renovations

Project Checklist

SOF Intel Ops Expansion

######

13 Sustainable Sites — Possible Points: 26

Y	?	N			
Y			Prereq 1	Construction Activity Pollution Prevention	
1			Credit 1	Site Selection	1
			Credit 2	Development Density and Community Connectivity	5
			Credit 3	Brownfield Redevelopment	1
			Credit 4.1	Alternative Transportation—Public Transportation Access	6
1			Credit 4.2	Alternative Transportation—Bicycle Storage and Changing Rooms	1
3			Credit 4.3	Alternative Transportation—Low-Emitting and Fuel-Efficient Vehicles	3
2			Credit 4.4	Alternative Transportation—Parking Capacity	2
			Credit 5.1	Site Development—Protect or Restore Habitat	1
1			Credit 5.2	Site Development—Maximize Open Space	1
1			Credit 6.1	Stormwater Design—Quantity Control	1
1			Credit 6.2	Stormwater Design—Quality Control	1
1			Credit 7.1	Heat Island Effect—Non-roof	1
1			Credit 7.2	Heat Island Effect—Roof	1
1			Credit 8	Light Pollution Reduction	1

8 Water Efficiency — Possible Points: 10

Y			Prereq 1	Water Use Reduction—20% Reduction	
4			Credit 1	Water Efficient Landscaping	2 to 4
			Credit 2	Innovative Wastewater Technologies	2
4			Credit 3	Water Use Reduction	2 to 4

10 Energy and Atmosphere — Possible Points: 35

Y			Prereq 1	Fundamental Commissioning of Building Energy Systems	
Y			Prereq 2	Minimum Energy Performance	
Y			Prereq 3	Fundamental Refrigerant Management	
5			Credit 1	Optimize Energy Performance	1 to 19
			Credit 2	On-Site Renewable Energy	1 to 7
			Credit 3	Enhanced Commissioning	2
2			Credit 4	Enhanced Refrigerant Management	2
3			Credit 5	Measurement and Verification	3
			Credit 6	Green Power	2

6 Materials and Resources — Possible Points: 14

Y			Prereq 1	Storage and Collection of Recyclables	
			Credit 1.1	Building Reuse—Maintain Existing Walls, Floors, and Roof	1 to 3
			Credit 1.2	Building Reuse—Maintain 50% of Interior Non-Structural Elements	1
2			Credit 2	Construction Waste Management	1 to 2
			Credit 3	Materials Reuse	1 to 2

Materials and Resources, Continued

Y	?	N			
1			Credit 4	Recycled Content	1 to 2
2			Credit 5	Regional Materials	1 to 2
			Credit 6	Rapidly Renewable Materials	1
1			Credit 7	Certified Wood	1

13 Indoor Environmental Quality — Possible Points: 15

Y			Prereq 1	Minimum Indoor Air Quality Performance	
Y			Prereq 2	Environmental Tobacco Smoke (ETS) Control	
1			Credit 1	Outdoor Air Delivery Monitoring	1
1			Credit 2	Increased Ventilation	1
1			Credit 3.1	Construction IAQ Management Plan—During Construction	1
1			Credit 3.2	Construction IAQ Management Plan—Before Occupancy	1
1			Credit 4.1	Low-Emitting Materials—Adhesives and Sealants	1
1			Credit 4.2	Low-Emitting Materials—Paints and Coatings	1
1			Credit 4.3	Low-Emitting Materials—Flooring Systems	1
1			Credit 4.4	Low-Emitting Materials—Composite Wood and Agrifiber Products	1
1			Credit 5	Indoor Chemical and Pollutant Source Control	1
1			Credit 6.1	Controllability of Systems—Lighting	1
1			Credit 6.2	Controllability of Systems—Thermal Comfort	1
1			Credit 7.1	Thermal Comfort—Design	1
1			Credit 7.2	Thermal Comfort—Verification	1
			Credit 8.1	Daylight and Views—Daylight	1
			Credit 8.2	Daylight and Views—Views	1

3 Innovation and Design Process — Possible Points: 6

1			Credit 1.1	Innovation in Design: Specific Title VRF HEAT RECOVERY	1
1			Credit 1.2	Innovation in Design: Specific Title DHW PREHEAT FROM VRF	1
			Credit 1.3	Innovation in Design: Specific Title	1
			Credit 1.4	Innovation in Design: Specific Title	1
			Credit 1.5	Innovation in Design: Specific Title	1
1			Credit 2	LEED Accredited Professional	1

4 Regional Priority Credits — Possible Points: 4

1			Credit 1.1	Regional Priority: Specific Credit IEQ7.1	1
1			Credit 1.2	Regional Priority: Specific Credit MRc2	1
1			Credit 1.3	Regional Priority: Specific Credit WEc3	1
1			Credit 1.4	Regional Priority: Specific Credit SS6.1	1

57 Total — Possible Points: 110

Certified 40 to 49 points Silver 50 to 59 points Gold 60 to 79 points Platinum 80 to 110

THIS PAGE HAS BEEN INTENTIONALLY LEFT BLANK

SECTION 01 35 26

GOVERNMENTAL SAFETY REQUIREMENTS
09/14

PART 1 GENERAL

1.1 REFERENCES

The publications listed below form a part of this specification to the extent referenced. The publications are referred to within the text by the basic designation only.

AMERICAN SOCIETY OF SAFETY ENGINEERS (ASSE/SAFE)

ASSE/SAFE A10.32	(2012) Fall Protection
ASSE/SAFE A10.34	(2001; R 2012) Protection of the Public on or Adjacent to Construction Sites
ASSE/SAFE Z359.1	(2007) Safety Requirements for Personal Fall Arrest Systems, Subsystems and Components

ASME INTERNATIONAL (ASME)

ASME B30.22	(2010) Articulating Boom Cranes
ASME B30.3	(2012) Tower Cranes
ASME B30.5	(2011) Mobile and Locomotive Cranes
ASME B30.8	(2010) Floating Cranes and Floating Derricks

ASTM INTERNATIONAL (ASTM)

ASTM F855	(2014) Standard Specifications for Temporary Protective Grounds to Be Used on De-energized Electric Power Lines and Equipment

INSTITUTE OF ELECTRICAL AND ELECTRONICS ENGINEERS (IEEE)

IEEE 1048	(2003) Guide for Protective Grounding of Power Lines
IEEE C2	(2012; Errata 2012; INT 1-4 2012; INT 5-7 2013) National Electrical Safety Code

INTERNATIONAL SAFETY EQUIPMENT ASSOCIATION (ISEA)

ANSI/ISEA Z87.1	(2010) Occupational and Educational Personal Eye and Face Protection Devices

NATIONAL FIRE PROTECTION ASSOCIATION (NFPA)

NFPA 1	(2012; TIA 11-1) Fire Code

NFPA 10	(2013) Standard for Portable Fire Extinguishers
NFPA 241	(2013) Standard for Safeguarding Construction,Alteration, and Demolition Operations
NFPA 306	(2014) Standard for Control of Gas Hazards on Vessels
NFPA 51B	(2014) Standard for Fire Prevention During Welding, Cutting, and Other Hot Work
NFPA 70	(2014; AMD 1 2013; Errata 1 2013; AMD 2 2013; Errata 2 2013; AMD 3 2014; Errata 3-4 2014; AMD 4-6 2014) National Electrical Code
NFPA 70E	(2012; Errata 2012) Standard for Electrical Safety in the Workplace

U.S. ARMY CORPS OF ENGINEERS (USACE)

EM 385-1-1	(2014) Safety and Health Requirements Manual

U.S. FEDERAL HIGHWAY ADMINISTRATION (FHWA)

FHWA MUTCD	(2009) Manual on Uniform Traffic Control Devices for Streets and Highways

U.S. NATIONAL ARCHIVES AND RECORDS ADMINISTRATION (NARA)

29 CFR 1910	Occupational Safety and Health Standards
29 CFR 1910.146	Permit-required Confined Spaces
29 CFR 1910.147	Control of Hazardous Energy (Lock Out/Tag Out)
29 CFR 1915	Confined and Enclosed Spaces and Other Dangerous Atmospheres in Shipyard Employment
29 CFR 1926	Safety and Health Regulations for Construction
29 CFR 1926.1400	Cranes & Derricks in Construction
29 CFR 1926.16	Rules of Construction
29 CFR 1926.500	Fall Protection
CPL 2.100	(1995) Application of the Permit-Required Confined Spaces (PRCS) Standards, 29 CFR 1910.146

U.S. NAVAL FACILITIES ENGINEERING COMMAND (NAVFAC)

NAVFAC P-307	(2009; Change 1 Mar 2011; Change 2 Aug 2011)Management of Weight Handling Equipment
ND OPNAVINST 5100.23	(2005; Rev G) Navy Occupational Safety and Health (NAVOSH) Program Manual

1.2 DEFINITIONS

a. Competent Person for Fall Protection. A person who is capable of identifying hazardous or dangerous conditions in the personal fall arrest system or any component thereof, as well as their application and use with related equipment, and has the authority to take prompt corrective measures to eliminate the hazards of falling.

b. High Visibility Accident. Any mishap which may generate publicity or high visibility.

c. Medical Treatment. Treatment administered by a physician or by registered professional personnel under the standing orders of a physician. Medical treatment does not include first aid treatment even through provided by a physician or registered personnel.

d. Operating Envelope. The area surrounding any crane. Inside this "envelope" is the crane, the operator, riggers and crane walkers, rigging gear between the hook and the load, the load and the crane's supporting structure (ground, rail, etc.).

e. Recordable Injuries or Illnesses. Any work-related injury or illness that results in:

(1) Death, regardless of the time between the injury and death, or the length of the illness;

(2) Days away from work (any time lost after day of injury/illness onset);

(3) Restricted work;

(4) Transfer to another job;

(5) Medical treatment beyond first aid;

(6) Loss of consciousness; or

(7) A significant injury or illness diagnosed by a physician or other licensed health care professional, even if it did not result in (1) through (6) above.

f. "USACE" property and equipment specified in USACE EM 385-1-1 should be interpreted as Government property and equipment.

g. Weight Handling Equipment (WHE) Accident. A WHE accident occurs when any one or more of the eight elements in the operating envelope fails to perform correctly during operation, including operation during maintenance or testing resulting in personnel injury or death; material or equipment damage; dropped load; derailment; two-blocking; overload;

or collision, including unplanned contact between the load, crane, or other objects. A dropped load, derailment, two-blocking, overload and collision are considered accidents even though no material damage or injury occurs. A component failure (e.g., motor burnout, gear tooth failure, bearing failure) is not considered an accident solely due to material or equipment damage unless the component failure results in damage to other components (e.g., dropped boom, dropped load, roll over, etc.) Any mishap meeting the criteria described above shall be documented in both the Contractor Significant Incident Report (CSIR) and using the NAVFAC prescribed Navy Crane Center (NCC) form submitted within five days both as provided by the Contracting Officer. Comply with additional requirements and procedures for accidents in accordance with NAVFAC P-307, Section 12.

h. Internal Traffic Control Plan (ITCP). Strategies to control the flow of construction workers, vehicles and equipment inside the work zone.

1.3 SUBMITTALS

Government approval is required for submittals with a "G" designation; submittals not having a "G" designation are for Contractor Quality Control approval. Submit the following in accordance with Section 01 33 00 SUBMITTAL PROCEDURES:

Government acceptance is required for submittals with a "G, A" designation.

SD-01 Preconstruction Submittals

Accident Prevention Plan (APP); G, A

Activity Hazard Analysis (AHA); G, A

Crane Critical Lift Plan; G, A

Proof of qualification for Crane Operators; G, A

Traffic Control Plan; G, A

Standard Hand Signals; G, A

SD-06 Test Reports

Notifications and Reports

Submit reports as their incidence occurs, in accordance with the requirements of the paragraph entitled, "Notifications and Reports."

Accident Reports

Crane Reports

Arc Flash Risk/Hazard Analysis; G

SD-07 Certificates

Confined Space Entry Permit

Hot work permit

Arc Flash Risk/Hazard Analysis Qualifications; G

Contractor Electrical Energized Work Permit; G

Contractor Safety Self-Evaluation Checklist; G, A

Certificate of Compliance (Crane)

Submit one copy of each permit/certificate attached to each Daily Quality Control Report.

1.4 CONTRACTOR SAFETY SELF-EVALUATION CHECKLIST

Contracting Officer will provide a "Contractor Safety Self-Evaluation checklist" to the Contractor at the pre-construction conference. Complete the checklist monthly and submit with each request for payment voucher. An acceptable score of 90 or greater is required. Failure to submit the completed safety self-evaluation checklist or achieve a score of at least 90 may result in retention of up to 10 percent of the voucher. Additionally, provide a Monthly Exposure Report and attach to the monthly billing request. This report is a compilation of employee-hours worked each month for all site workers, both prime and subcontractor. Failure to submit the report may result in retention of up to 10 percent of the voucher. The Contracting Officer will submit a copy of the Contractor Safety Self-Evaluation and Monthly Exposure Report to the local safety and occupational health office.

1.5 REGULATORY REQUIREMENTS

In addition to the detailed requirements included in the provisions of this contract, comply with the most recent edition of USACE EM 385-1-1, NFPA 70E, IEEE C2 and federal, state, and local, laws, ordinances, criteria, rules and regulations. Submit matters of interpretation of standards to the appropriate administrative agency for resolution before starting work. Where the requirements of this specification, applicable laws, criteria, ordinances, regulations, and referenced documents vary, the most stringent requirements govern.

1.6 SITE QUALIFICATIONS, DUTIES AND MEETINGS

1.6.1 Personnel Qualifications

1.6.1.1 Site Safety and Health Officer (SSHO)

The SSHO must meet the requirements of EM 385-1-1 section 1 and ensure that the requirements of 29 CFR 1926.16 are met for the project. Provide a Safety oversight team that includes a minimum of one (1) person at each project site to function as the Site Safety and Health Officer (SSHO). The SSHO or an equally-qualified Designated Representative/alternate shall be at the work site at all times to implement and administer the Contractor's safety program and government-accepted Accident Prevention Plan. The SSHO's training, experience, and qualifications shall be as required by EM 385-1-1 paragraph 01.A.17, entitled SITE SAFETY AND HEALTH OFFICER (SSHO), and all associated sub-paragraphs.

A Competent Person shall be provided for all of the hazards identified in the Contractor's Safety and Health Program in accordance with the accepted Accident Prevention Plan, and shall be on-site at all times when the work

that presents the hazards associated with their professional expertise is being performed. Provide the credentials of the Competent Persons(s) to the the Contracting Officer for acceptance in consultation with the Safety Office.

1.6.1.1.1 Contractor Quality Control (QC) Person

The Contractor Quality Control Person cannot be the SSHO on this project, even though the QC has safety inspection responsibilities as part of the QC duties.

1.6.1.2 Competent Person for Confined Space Entry

Provide a competent person for confined space meeting the definition and requirements of EM 385-1-1. If work involves marine operations that handle combustible or hazardous materials, this person shall have the ability to understand and follow through on the air sampling, PPE, and instructions of a Marine Chemist, Coast Guard authorized persons, or Certified Industrial Hygienist. All confined and enclosed space work shall comply with NFPA 306 or as applicable, 29 CFR 1910.147 for general industry.

1.6.1.3 Crane Operators

Meet the crane operators requirements in USACE EM 385-1-1, Section 16 and Appendix I. In addition, for mobile cranes, designate crane operators as qualified by a source that qualifies crane operators (i.e., union, a government agency, or and organization that tests and qualifies crane operators). Provide proof of current qualification. In addition, the Contractor shall comply with Contractor Operated Crane Requirements included in the latest revision of document NAVFAC P-307 Section 1.7.2 "Contractor Operated Cranes," and Appendix P, Figure P-1 and with 29 CFR 1926, Subpart CC.

1.6.2 Personnel Duties

1.6.2.1 Site Safety and Health Officer (SSHO)

The SSHO shall:

a. Conduct daily safety and health inspections and maintain a written log which includes area/operation inspected, date of inspection, identified hazards, recommended corrective actions, estimated and actual dates of corrections. Attach safety inspection logs to the Contractors' daily quality control report.

b. Conduct mishap investigations and complete required reports. Maintain the OSHA Form 300 and Daily Production reports for prime and sub-contractors.

c. Maintain applicable safety reference material on the job site.

d. Attend the pre-construction conference, pre-work meetings including preparatory inspection meeting, and periodic in-progress meetings.

e. Implement and enforce accepted APPS and AHAs.

f. Maintain a safety and health deficiency tracking system that monitors outstanding deficiencies until resolution. Post a list of unresolved safety and health deficiencies on the safety bulletin board.

g. Ensure sub-contractor compliance with safety and health requirements.

h. Ensure an approved "Contractor Electrical Energized Work Permit" prior to starting any activity on energized electrical systems.

i. Maintain a list of hazardous chemicals on site and their material safety data sheets.

Failure to perform the above duties will result in dismissal of the superintendent, QC Manager, and/or SSHO, and a project work stoppage. The project work stoppage will remain in effect pending approval of a suitable replacement.

1.6.3 Meetings

1.6.3.1 Preconstruction Conference

a. Contractor representatives who have a responsibility or significant role in accident prevention on the project shall attend the preconstruction conference. This includes the project superintendent, site safety and health officer, quality control supervisor, or any other assigned safety and health professionals who participated in the development of the APP (including the Activity Hazard Analyses (AHAs) and special plans, program and procedures associated with it).

b. Discuss the details of the submitted APP to include incorporated plans, programs, procedures and a listing of anticipated AHAs that will be developed and implemented during the performance of the contract. This list of proposed AHAs will be reviewed at the conference and an agreement will be reached between the Contractor and the Contracting Officer's representative as to which phases will require an analysis. In addition, establish a schedule for the preparation, submittal, review, and acceptance of AHAs to preclude project delays.

c. Deficiencies in the submitted APP will be brought to the attention of the Contractor at the preconstruction conference, and the Contractor shall revise the plan to correct deficiencies and re-submit it for acceptance. Do not begin work until there is an accepted APP.

1.6.3.2 Safety Meetings

Conduct and document meetings as required by EM 385-1-1. Attach minutes showing contract title, signatures of attendees and a list of topics discussed to the Contractors' daily quality control report.

1.7 ACCIDENT PREVENTION PLAN (APP)

Use a qualified person to prepare the written site-specific APP. Prepare the APP in accordance with the format and requirements of USACE EM 385-1-1 and as supplemented herein. Cover all paragraph and subparagraph elements in USACE EM 385-1-1, Appendix A, "Minimum Basic Outline for Accident Prevention Plan". Specific requirements for some of the APP elements are described below. The APP shall be job-specific and address any unusual or unique aspects of the project or activity for which it is written. The APP shall interface with the Contractor's overall safety and health program. Include any portions of the Contractor's overall safety and health program referenced in the APP in the applicable APP element and made site-specific. The Government considers the Prime Contractor to be the

"controlling authority" for all work site safety and health of the subcontractors. Contractors are responsible for informing their subcontractors of the safety provisions under the terms of the contract and the penalties for noncompliance, coordinating the work to prevent one craft from interfering with or creating hazardous working conditions for other crafts, and inspecting subcontractor operations to ensure that accident prevention responsibilities are being carried out. The APP shall be signed by the person and firm (senior person) preparing the APP, the Contractor, the on-site superintendent, the designated site safety and health officer, the Contractor Quality Control Manager, and any designated CSP or CIH.

Submit the APP to the Contracting Officer 15 calendar days prior to the date of the preconstruction conference for acceptance. Work cannot proceed without an accepted APP.

Once accepted by the Contracting Officer, the APP and attachments will be enforced as part of the contract. Disregarding the provisions of this contract or the accepted APP will be cause for stopping of work, at the discretion of the Contracting Officer, until the matter has been rectified.

Once work begins, changes to the accepted APP shall be made with the knowledge and concurrence of the Contracting Officer, project superintendent, SSHO and quality control manager. Should any severe hazard exposure, i.e. imminent danger, become evident, stop work in the area, secure the area, and develop a plan to remove the exposure and control the hazard. Notify the Contracting Officer within 24 hours of discovery. Eliminate/remove the hazard. In the interim, take all necessary action to restore and maintain safe working conditions in order to safeguard onsite personnel, visitors, the public (as defined by ASSE/SAFE A10.34,) and the environment.

Copies of the accepted plan will be maintained at the Contracting Officer's office and at the job site. Continuously review and amend the APP, as necessary, throughout the life of the contract. Incorporate unusual or high-hazard activities not identified in the original APP as they are discovered.

1.7.1 EM 385-1-1 Contents

In addition to the requirements outlined in Appendix A of USACE EM 385-1-1, the following is required:

a. Names and qualifications (resumes including education, training, experience and certifications) of all site safety and health personnel designated to perform work on this project to include the designated site safety and health officer and other competent and qualified personnel to be used such as CSPs, CIHs, STSs, CHSTs. Specify the duties of each position.

b. Qualifications of competent and of qualified persons. As a minimum, designate and submit qualifications of competent persons for each of the following major areas: excavation; scaffolding; fall protection; hazardous energy; confined space; health hazard recognition, evaluation and control of chemical, physical and biological agents; personal protective equipment and clothing to include selection, use and maintenance.

c. Confined Space Entry Plan. Develop a confined and/or enclosed space entry plan in accordance with USACE EM 385-1-1, applicable OSHA

standards 29 CFR 1910, 29 CFR 1915, and 29 CFR 1926, OSHA Directive CPL 2.100, and any other federal, state and local regulatory requirements identified in this contract. Identify the qualified person's name and qualifications, training, and experience. Delineate the qualified person's authority to direct work stoppage in the event of hazardous conditions. Include procedure for rescue by contractor personnel and the coordination with emergency responders. (If there is no confined space work, include a statement that no confined space work exists and none will be created.)

d. Crane Critical Lift Plan. Prepare and sign weight handling critical lift plans for lifts over 75 percent of the capacity of the crane or hoist (or lifts over 50 percent of the capacity of a barge mounted mobile crane's hoists) at any radius of lift; lifts involving more than one crane or hoist; lifts of personnel; and lifts involving non-routine rigging or operation, sensitive equipment, or unusual safety risks. Submit 15 calendar days prior to on-site work and include the requirements of USACE EM 385-1-1, paragraph 16.H. and the following:

(1) For lifts of personnel, demonstrate compliance with the requirements of 29 CFR 1926.1400.

(2) For barge mounted mobile cranes, barge stability calculations identifying barge list and trim based on anticipated loading; and load charts based on calculated list and trim. The amount of list and trim shall be within the crane manufacturer's requirements.

e. Fall Protection and Prevention (FP&P) Program Documentation. The program documentation shall be site specific and address all fall hazards in the work place and during different phases of construction. Address how to protect and prevent workers from falling to lower levels when they are exposed to fall hazards above 6 feet. A qualified person for fall protection shall prepare and sign the program documentation. Include fall protection and prevention systems, equipment and methods employed for every phase of work, responsibilities, assisted rescue, self-rescue and evacuation procedures, training requirements, and monitoring methods. Revise the Fall Protection and Prevention Program Documentation for lengthy projects, reflecting any changes during the course of construction due to changes in personnel, equipment, systems or work habits. Keep and maintain the accepted Fall Protection and Prevention Program Documentation at the job site for the duration of the project. Include the Fall Protection and Prevention Program Documentation in the Accident Prevention Plan (APP).

The FP&P Plan shall include a Rescue and Evacuation Plan in accordance with USACE EM 385-1-1, Section 21.M. The plan shall include a detailed discussion of the following: methods of rescue; methods of self-rescue; equipment used; training requirement; specialized training for the rescuers; procedures for requesting rescue and medical assistance; and transportation routes to a medical facility. Include the Rescue and Evacuation Plan in the Fall Protection and Prevention (FP&P) Plan, and as part of the Accident Prevention Plan (APP).

l. Excavation Plan. The safety and health aspects prepared in accordance with Section 31 23 00.00 20 EXCAVATION AND FILL.

1.8 ACTIVITY HAZARD ANALYSIS (AHA)

The Activity Hazard Analysis (AHA) format shall be in accordance with USACE

EM 385-1-1, Section 1. NAVFAC Midlant shall follow latest edition authorized by command. Submit the AHA for review at least 7 calendar days prior to the start of each phase. Format subsequent AHAs as amendments to the APP. The analysis should be used during daily inspections to ensure the implementation and effectiveness of the activity's safety and health controls.

The AHA list will be reviewed periodically (at least monthly) at the Contractor supervisory safety meeting and updated as necessary when procedures, scheduling, or hazards change.

Develop the activity hazard analyses using the project schedule as the basis for the activities performed. Any activities listed on the project schedule will require an AHA. The AHAs will be developed by the contractor, supplier or subcontractor and provided to the prime contractor for submittal to the Contracting Officer.

1.9 DISPLAY OF SAFETY INFORMATION

Within 1 calendar day after commencement of work, erect a safety bulletin board at the job site. Where size, duration, or logistics of project do not facilitate a bulletin board, an alternative method, acceptable to the Contracting Officer, that is accessible and includes all mandatory information for employee and visitor review, shall be deemed as meeting the requirement for a bulletin board. Include and maintain information on safety bulletin board as required by EM 385-1-1, section 01.A.06. Additional items required to be posted include:

a. Confined space entry permit.

b. Hot work permit.

c. Contractor Electrical Energized Work Permit.

1.10 SITE SAFETY REFERENCE MATERIALS

Maintain safety-related references applicable to the project, including those listed in the article "References." Maintain applicable equipment manufacturer's manuals.

1.11 EMERGENCY MEDICAL TREATMENT

Contractors will arrange for their own emergency medical treatment. Government has no responsibility to provide emergency medical treatment.

1.12 NOTIFICATIONS AND REPORTS

1.12.1 Accident Notification

Notify the Contracting Officer as soon as practical, but not later than four hours, after any accident meeting the definition of Recordable Injuries or Illnesses or High Visibility Accidents, property damage equal to or greater than $2,000, or any weight handling equipment accident. Within notification include contractor name; contract title; type of contract; name of activity, installation or location where accident occurred; date and time of accident; names of personnel injured; extent of property damage, if any; extent of injury, if known, and brief description of accident (to include type of construction equipment used, PPE used, etc.). Preserve the conditions and evidence on the accident site until the

Government investigation team arrives on-site and Government investigation is conducted.

1.12.2 Accident Reports

a. Conduct an accident investigation for recordable injuries and illnesses, for Medical Treatment defined in paragraph DEFINITIONS, property damage accidents resulting in at least $20,000 in damages, and near misses as defined in EM 385-1-1, to establish the root cause(s) of the accident. Complete the Contractor Incident Report (CIR), and electronically file the report in ESAMS within 5 calendar day(s) of the accident.

b. Near Misses: Complete the applicable documentation in NAVFAC Contractor Incident Reporting System (CIRS), and electronically submit via the NAVFAC Enterprise Safety Applications Management System (ESAMS).

c. Conduct an accident investigation for any weight handling equipment accident (including rigging gear accidents) to establish the root cause(s) of the accident, complete the WHE Accident Report (Crane and Rigging Gear) form and provide the report to the Contracting Officer within 30 calendar days of the accident. Do not proceed with crane operations until cause is determined and corrective actions have been implemented to the satisfaction of the contracting officer. The Contracting Officer will provide a blank copy of the accident report form.

1.12.3 Crane Reports

Submit crane inspection reports required in accordance with USACE EM 385-1-1, Appendix I and as specified herein with Daily Reports of Inspections.

1.12.4 Certificate of Compliance

Provide a Certificate of Compliance for each crane entering an activity under this contract (see Contracting Officer for a blank certificate). State within the certificate that the crane and rigging gear meet applicable OSHA regulations (with the Contractor citing which OSHA regulations are applicable, e.g., cranes used in construction, demolition, or maintenance comply with 29 CFR 1926 and USACE EM 385-1-1 Section 16 and Appendix I. Certify on the Certificate of Compliance that the crane operator(s) is qualified and trained in the operation of the crane to be used. Also certify that all of its crane operators working on the DOD activity have been trained in the proper use of all safety devices (e.g., anti-two block devices). Post certifications on the crane.

1.13 HOT WORK (Welding And Cutting, Etc.)

Hot work permits will only be issued to the Prime Contractor. Prime Contractor shall notify FEAD/ROICC office of issuance of hot work permits and all renewals of hot work permits. Copies of all hot work permits and renewals shall be attached to daily quality control reports.

Submit and obtain a written permit prior to performing "Hot Work" (welding, cutting, etc.) or operating other flame-producing/spark producing devices, from the Fire Division. A permit is required from the Explosives Safety Office for work in and around where explosives are processed, stored, or handled. CONTRACTORS ARE REQUIRED TO MEET ALL CRITERIA BEFORE A PERMIT IS ISSUED. Provide at least two (2) twenty (20) pound 4A:20 BC rated

extinguishers for normal "Hot Work". All extinguishers shall be current inspection tagged, approved safety pin and tamper resistant seal. It is also mandatory to have a designated FIRE WATCH for any "Hot Work" done at this activity. The Fire Watch shall be trained in accordance with NFPA 51B and remain on-site for a minimum of 30 minutes after completion of the task or as specified on the hot work permit.

When starting work in the facility, require personnel to familiarize themselves with the location of the nearest fire alarm boxes and place in memory the emergency Fire Division phone number. ANY FIRE, NO MATTER HOW SMALL, SHALL BE REPORTED TO THE RESPONSIBLE FIRE DIVISION IMMEDIATELY.

1.14 FACILITY OCCUPANCY CLOSURE

Streets, walks, and other facilities occupied and used by the Government shall not be closed or obstructed without written permission from the Contracting Officer.

1.15 SEVERE STORM PLAN

In the event of a severe storm warning, the Contractor must:

a. Secure outside equipment and materials and place materials that could be damaged in protected areas.

b. Check surrounding area, including roof, for loose material, equipment, debris, and other objects that could be blown away or against existing facilities.

c. Ensure that temporary erosion controls are adequate.

1.16 CONFINED SPACE ENTRY REQUIREMENTS.

Contractors entering and working in confined spaces performing general industry work are required to follow the requirements of OSHA 29 CFR 1910, 29 CFR 1910.146, and EM 385-1-1 Section 34 Confined Space Entry.

NAVFAC personnel entering and working in confined spaces performing non-maritime facility work are required to follow the requirements of ND OPNAVINST 5100.23 Chapter 27.

1.17 TRAFFIC CONTROL

The requirements contained in this paragraph are in addition to the requirements contained in EM 385-1-1. In case of a conflict, the more stringent requirement applies. Traffic Control shall be accomplished in accordance with FHWA MUTCD.

1.17.1 Traffic Control Plan

Prior to the commencement of contract operations, the Contractor shall submit for acceptance the complete details of the proposed traffic control plan for the maintenance of traffic and access through the contract work area.

Include traffic control and traffic control signal systems in each Activity Hazard Analysis as applicable.

1.17.2 Signal Systems, Personnel And Procedures

Signal systems, personnel and procedures shall comply with EM 385-1-1 Section 08.B SIGNAL SYSTEMS, PERSONNEL AND PROCEDURES.

1.17.2.1 Standard Hand Signals

Standard hand signals shall be submitted for acceptance and shall be posted at the operator's position, signal control points and other points as necessary to inform those concerned.

1.17.3 Road Closings

Traffic control is extremely important on highways, in residential areas, and at construction sites. When traffic may pose a hazard to operations, public roads will be closed. Road closings shall be coordinated in writing with appropriate local agencies. Traffic controls and signage shall comply with FHWA MUTCD.

1.17.4 Operating Precautions

When a road cannot be closed, the following precautions shall be taken:

a. “FLAGGER” (FHWA MUTCD W-20-7) or “WORKERS AHEAD: (W21-1) or similar appropriate signs shall be placed along the roadway, 1,000 ft (304.8m) and 500 ft (30.5 m) before the work zone, on both sides of the work zone”.

b. Sufficient number of flag persons shall be used to control traffic within the work area.

c. Flag persons shall be used and shall receive instruction in flagging operations before being placed in traffic (training and certification by the National Safety Council (NSC) is recommended).

d. All flag persons shall wear high-visibility apparel in accordance with EM 385-1-1, paragraph 05.F, safety-toed footwear and hard hats.

e. "STOP/SLOW" paddles, preferably mounted on a 6 ft staff, will be used for traffic control.

f. Flag persons shall be able to communicate with each other and with the foreman, and effectively signal/direct the affected public.

g. Two-way radios shall be used whenever visual contact between flaggers is not maintained.

1.17.5 Construction Vehicles

All construction vehicles and all vehicles exceeding 1-1/2 tons (1360.8 kg) shall have a signal person to assist in backing and maneuvering in residential and construction areas.

1.17.6 Internal Traffic Control Plans (ITCP)

Internal traffic control plans (ITCP) (written plans which address separation and safety of personnel and moving equipment) will be attached to all AHA's when interaction between personnel and moving equipment will occur or physical changes occur onsite which could affect personnel or

moving equipment.

PART 2 PRODUCTS

2.1 CONFINED SPACE SIGNAGE

Provide permanent signs integral to or securely attached to access covers for new permit-required confined spaces. Signs wording: "DANGER--PERMIT-REQUIRED CONFINED SPACE - DO NOT ENTER -" in bold letters a minimum of one inch in height and constructed to be clearly legible with all paint removed. The signal word "DANGER" shall be red and readable from 5 feet.

PART 3 EXECUTION

3.1 CONSTRUCTION AND/OR OTHER WORK

Comply with USACE EM 385-1-1, NFPA 1, NFPA 70, NFPA 70E, NFPA 241, IEEE C2, the APP, the AHA, Federal and/or State OSHA regulations, and other related submittals and activity fire and safety regulations. The most stringent standard prevails.

PPE is required at all times, in accordance with EM 385-1-1, for all personnel who enters a construction site area. In addition to the requirements of EM 385-1-1, Safety Glasses ANSI/ISEA Z87.1 will be worn at all times on construction sites, unless the competent person identifies in the Contractor's accepted activity hazard analysis that an equal or greater hazard is presented in the mandatory wearing of safety glasses. Use personal hearing protection at all times in designated noise hazardous areas or when performing noise hazardous tasks.

Mandatory PPE on all construction sites includes:

a. Hard Hat

b. Safety Glasses

c. Safety-Toed Shoes or Boots

3.1.1 Hazardous Material Use

Each hazardous material must receive approval from the Contracting Officer or their designated representative prior to being brought onto the job site or prior to any other use in connection with this contract. Allow a minimum of 10 working days for processing of the request for use of a hazardous material.

3.1.2 Hazardous Material Exclusions

Notwithstanding any other hazardous material used in this contract, radioactive materials or instruments capable of producing ionizing/non-ionizing radiation (with the exception of radioactive material and devices used in accordance with USACE EM 385-1-1 such as nuclear density meters for compaction testing and laboratory equipment with radioactive sources) as well as materials which contain asbestos, mercury or polychlorinated biphenyls, di-isocynates, lead-based paint are prohibited. The Contracting Officer, upon written request by the Contractor, may consider exceptions to the use of any of the above excluded materials. Low mercury lamps used within fluorescent lighting fixtures are

allowed as an exception without further Contracting Officer approval. Notify the Radiation Safety Officer (RSO) prior to excepted items of radioactive material and devices being brought on base.

3.1.3 Unforeseen Hazardous Material

The design should have identified materials such as PCB, lead paint, and friable and non-friable asbestos, and other OSHA regulated chemicals (i.e. 29 CFR Part 1910.1000). If material, not indicated, that may be hazardous to human health upon disturbance during construction operations is encountered, stop that portion of work and notify the Contracting Officer immediately. Within 14 calendar days the Government will determine if the material is hazardous. If material is not hazardous or poses no danger, the Government will direct the Contractor to proceed without change. If material is hazardous and handling of the material is necessary to accomplish the work, the Government will issue a modification pursuant to "FAR 52.243-4, Changes" and "FAR 52.236-2, Differing Site Conditions."

3.2 PRE-OUTAGE COORDINATION MEETING

Apply for utility outages at least 15 days in advance. As a minimum, the request should include the location of the outage, utilities being affected, duration of outage and any necessary sketches. Special requirements for electrical outage requests are contained elsewhere in this specification section. Once approved, and prior to beginning work on the utility system requiring shut down, attend a pre-outage coordination meeting with the Contracting Officer to review the scope of work and the lock-out/tag-out procedures for worker protection. No work will be performed on energized electrical circuits unless proof is provided that no other means exist. For electrical work positive cable/circuit identification must be made prior to submitting any outage request. Arrangements are to be coordinated with the Contracting Officer and Station Utilities for identification. The Contracting Officer will not accept an outage request until the Contractor satisfactorily documents that the circuits have been clearly identified. Following the application of lockout/tag out devices to all hazardous energy sources, applicable AHA should outline equipment restart methods to ensure "zero energy" state has been accomplished.

3.3 CONTROL OF HAZARDOUS ENERGY (LOCKOUT/TAGOUT)

Ensure that each employee is familiar with and complies with these procedures and USACE EM 385-1-1, Section 12, Control of Hazardous Energy.

3.4 FALL HAZARD PROTECTION AND PREVENTION PROGRAM

Establish a fall protection and prevention program, for the protection of all employees exposed to fall hazards. Within the program include company policy, identify responsibilities, education and training requirements, fall hazard identification, prevention and control measures, inspection, storage, care and maintenance of fall protection equipment and rescue and evacuation procedures.

3.4.1 Training

Institute a fall protection training program. As part of the Fall Hazard Protection and Prevention Program, provide training for each employee who might be exposed to fall hazards. Provide training by a competent person for fall protection in accordance with USACE EM 385-1-1, Section 21.B.

3.4.2 Fall Protection Equipment and Systems

Enforce use of the fall protection equipment and systems designated for each specific work activity in the Fall Protection and Prevention Plan and/or AHA at all times when an employee is exposed to a fall hazard. Protect employees from fall hazards as specified in EM 385-1-1, Section 21. In addition to the required fall protection systems, safety skiff, personal floatation devices, life rings etc., are required when working above or next to water in accordance with USACE EM 385-1-1, Paragraphs 21.N through 21.N.04. Personal fall arrest systems are required when working from an articulating or extendible boom, swing stages, or suspended platform. In addition, personal fall arrest systems are required when operating other equipment such as scissor lifts if the work platform is capable of being positioned outside the wheelbase. The need for tying-off in such equipment is to prevent ejection of the employee from the equipment during raising, lowering, or travel. Fall protection must comply with 29 CFR 1926.500, Subpart M, USACE EM 385-1-1 and ASSE/SAFE A10.32.

3.4.2.1 Personal Fall Arrest Equipment

Personal fall arrest equipment, systems, subsystems, and components shall meet ASSE/SAFE Z359.1. Only a full-body harness with a shock-absorbing lanyard or self-retracting lanyard is an acceptable personal fall arrest body support device. Body belts may only be used as a positioning device system (for uses such as steel reinforcing assembly and in addition to an approved fall arrest system). Harnesses shall have a fall arrest attachment affixed to the body support (usually a Dorsal D-ring) and specifically designated for attachment to the rest of the system. Only locking snap hooks and carabiners shall be used. Webbing, straps, and ropes shall be made of synthetic fiber. The maximum free fall distance when using fall arrest equipment shall not exceed 6 feet. The total fall distance and any swinging of the worker (pendulum-like motion) that can occur during a fall shall always be taken into consideration when attaching a person to a fall arrest system.

3.4.3 Fall Protection for Roofing Work

Implement fall protection controls based on the type of roof being constructed and work being performed. Evaluate the roof area to be accessed for its structural integrity including weight-bearing capabilities for the projected loading.

a. Low Sloped Roofs:

(1) For work within 6 feet of an edge, on low-slope roofs, protect personnel from falling by use of personal fall arrest systems, guardrails, or safety nets. A safety monitoring system used by itself as the only form of fall protection system is not adequate fall protection and is not authorized.

(2) For work greater than 6 feet from an edge, erect and install warning lines in accordance with 29 CFR 1926.500 and USACE EM 385-1-1.

b. Steep-Sloped Roofs: Work on steep-sloped roofs requires a personal fall arrest system, guardrails with toe-boards, or safety nets. This requirement also includes residential or housing type construction.

3.4.4 Horizontal Lifelines

Design, install, certify and use under the supervision of a qualified person horizontal lifelines for fall protection as part of a complete fall arrest system which maintains a safety factor of 2 (29 CFR 1926.500).

3.4.5 Guardrails and Safety Nets

Design, install and use guardrails and safety nets in accordance with EM 385-1-1 and 29 CFR 1926 Subpart M.

3.4.6 Rescue and Evacuation Procedures

When personal fall arrest systems are used, the contractor must ensure that the mishap victim can self-rescue or can be rescued promptly should a fall occur. Prepare a Rescue and Evacuation Plan and include a detailed discussion of the following: methods of rescue; methods of self-rescue; equipment used; training requirement; specialized training for the rescuers; procedures for requesting rescue and medical assistance; and transportation routes to a medical facility. Include the Rescue and Evacuation Plan within the Activity Hazard Analysis (AHA) for the phase of work, in the Fall Protection and Prevention (FP&P) Plan, and the Accident Prevention Plan (APP).

3.5 SCAFFOLDING

Provide employees with a safe means of access to the work area on the scaffold. Climbing of any scaffold braces or supports not specifically designed for access is prohibited. Access scaffold platforms greater than 20 feet maximum in height by use of a scaffold stair system. Do not use vertical ladders commonly provided by scaffold system manufacturers for accessing scaffold platforms greater than 20 feet maximum in height. The use of an adequate gate is required. Ensure that employees are qualified to perform scaffold erection and dismantling. Do not use scaffold without the capability of supporting at least four times the maximum intended load or without appropriate fall protection as delineated in the accepted fall protection and prevention plan. Stationary scaffolds must be attached to structural building components to safeguard against tipping forward or backward. Give special care to ensure scaffold systems are not overloaded. Side brackets used to extend scaffold platforms on self-supported scaffold systems for the storage of material is prohibited. The first tie-in shall be at the height equal to 4 times the width of the smallest dimension of the scaffold base. Place work platforms on mud sills. Scaffold or work platform erectors shall have fall protection during the erection and dismantling of scaffolding or work platforms that are more than six feet. Delineate fall protection requirements when working above six feet or above dangerous operations in the Fall Protection and Prevention (FP&P) Plan and Activity Hazard Analysis (AHA) for the phase of work.

3.6 EQUIPMENT

3.6.1 Material Handling Equipment

a. Material handling equipment such as forklifts shall not be modified with work platform attachments for supporting employees unless specifically delineated in the manufacturer's printed operating instructions.

b. The use of hooks on equipment for lifting of material must be in accordance with manufacturer's printed instructions. Additionally, when material handling equipment is used as a crane it must meet NAVFAC P-307 requirements in Sections 1.7.2, "Contractor Operated Cranes," and 12, "Investigation and Reporting of Crane and Rigging Gear Accidents."

c. Operators of forklifts or power industrial trucks shall be licensed in accordance with OSHA. Proof of qualifications for operator shall be kept on the project site and addressed as part of the AHA.

3.6.2 Weight Handling Equipment

a. Equip cranes and derricks as specified in EM 385-1-1, section 16.

b. Notify the Contracting Officer 15 days in advance of any cranes entering the activity so that necessary quality assurance spot checks can be coordinated. Prior to cranes entering federal activities, a Crane Access Permit must be obtained from the Contracting Officer. Acopy of the permitting process will be provided at the Preconstruction Conference. Contractor's operator shall remain with the crane during the spot check.

c. Comply with the crane manufacturer's specifications and limitations for erection and operation of cranes and hoists used in support of the work. Perform erection under the supervision of a designated person (as defined in ASME B30.5). Perform all testing in accordance with the manufacturer's recommended procedures.

d. Comply with ASME B30.5 for mobile and locomotive cranes, ASME B30.22 for articulating boom cranes, ASME B30.3 for construction tower cranes, and ASME B30.8 for floating cranes and floating derricks.

e. Under no circumstance shall a Contractor make a lift at or above 90 percent of the crane's rated capacity in any configuration.

f. When operating in the vicinity of overhead transmission lines, operators and riggers shall be alert to this special hazard and follow the requirements of USACE EM 385-1-1 Section 11, NAVFAC P-307 Figure 10-3 and ASME B30.5 or ASME B30.22 as applicable.

g. Do not use crane suspended personnel work platforms (baskets) unless the Contractor proves that using any other access to the work location would provide a greater hazard to the workers or is impossible. Do not lift personnel with a line hoist or friction crane.

h. Inspect, maintain, and recharge portable fire extinguishers as specified in NFPA 10, Standard for Portable Fire Extinguishers.

i. All employees must keep clear of loads about to be lifted and of suspended loads.

j. Use cribbing when performing lifts on outriggers.

k. The crane hook/block must be positioned directly over the load. Side loading of the crane is prohibited.

l. A physical barricade must be positioned to prevent personnel from entering the counterweight swing (tail swing) area of the crane.

m. Certification records which include the date of inspection, signature of the person performing the inspection, and the serial number or other identifier of the crane that was inspected shall always be available for review by Contracting Officer personnel.

n. Written reports listing the load test procedures used along with any repairs or alterations performed on the crane shall be available for review by Contracting Officer personnel.

o. Certify that all crane operators have been trained in proper use of all safety devices (e.g. anti-two block devices).

p. Take steps to ensure that wind speed does not contribute to loss of control of the load during lifting operations. Prior to conducting lifting operations set a maximum wind speed at which a crane can be safely operated based on the equipment being used, the load being lifted, experience of operators and riggers, and hazards on the work site. This maximum wind speed determination shall be included as part of the activity hazard analysis plan for that operation.

3.6.3 Machinery and Mechanized Equipment

a. Proof of qualifications for operator shall be kept on the project site for review.

b. Manufacturer specifications or owner's manual for the equipment shall be on-site and reviewed for additional safety precautions or requirements that are sometimes not identified by OSHA or USACE EM 385-1-1. Incorporate such additional safety precautions or requirements into the AHAs.

c. Machinery & Mechanized Equipment are subject to additional Navy proof of certification. A certification form for acceptance by the Contracting Officer prior to being placed into use may be required.

3.6.4 USE OF EXPLOSIVES

Explosives shall not be used or brought to the project site without prior written approval from the Contracting Officer. Such approval shall not relieve the Contractor of responsibility for injury to persons or for damage to property due to blasting operations.

Storage of explosives, when permitted on Government property, shall be only where directed and in approved storage facilities. These facilities shall be kept locked at all times except for inspection, delivery, and withdrawal of explosives.

3.7 EXCAVATIONS

Soil classification must be performed by a competent person in accordance with 29 CFR 1926 and EM 385-1-1. A competent person for excavation must be on site during all excavation work.

3.7.1 Utility Locations

All underground utilities in the work area must be positively identified by a third party, independent, private utility locating company in addition to any station locating service and coordinated with the station utility

department. Any markings made during the utility investigation must be maintained throughout the contract.

3.7.2 Utility Location Verification

Physically verify underground utility locations, including utility depth, by hand digging using wood or fiberglass handled tools when any adjacent construction work is expected to come within three feet of the underground system.

3.7.3 Utilities Within and Under Concrete, Bituminous Asphalt, and Other Impervious Surfaces

Utilities located within and under concrete slabs or pier structures, bridges, parking areas, and the like, are extremely difficult to identify. Whenever contract work involves chipping, saw cutting, or core drilling through concrete, bituminous asphalt or other impervious surfaces, the existing utility location must be coordinated with station utility departments in addition to location and depth verification by a third party, independent, private locating company. The third party, independent, private locating company shall locate utility depth by use of Ground Penetrating Radar (GPR), X-ray, bore scope, or ultrasound prior to the start of demolition and construction. Outages to isolate utility systems must be used in circumstances where utilities are unable to be positively identified. The use of historical drawings does not alleviate the contractor from meeting this requirement.

3.7.4 Location of Underground Utilities

Location and Protection of underground utilities shall be the responsibility of the Contractor. Where existing-to-remain piping, utilities, and underground obstructions of any type are indicated in locations to be traversed by new piping, ducts, and other evacuations, the elevations of the existing utilities and obstructions shall be determined before the new work is completed.

a. In addition, the Contractor shall be responsible for obtaining the services of a professional utility locator prior to digging. Contractor shall provide documentation that the site has been surveyed and checked for underground utilities. All utilities shall be located, including but not limited to power, water, sewer, storm drains, fiber optics, T.V. cable, telephone, and intrusion detection wiring. A set of known utility drawings will be available in the OICC office for review to assist the locator.

b. It is mandatory that the Contractor also contact the Base Telephone Office at (910) 451-2531 prior to accomplishing any digging at Camp Lejeune. A telephone office representative will assist in locating telephone lines.

c. It is mandatory that the Contractor also contact Charter Communications, cable TV service prior to accomplishing any digging at Camp Lejeune, to ensure that all buried cable lines are identified. Contact Mr. Olin Criswell at (910) 353-8677 for assistance.

d. It is mandatory that the Contractor also contact the North Carolina One-Call Center to coordinate the location of underground natural gas infrastructure. North Carolina 811, Inc. can be reached at 811 on a touch-tone phone in the state of North Carolina or toll-free at

1-800-632-4949 if calling from out of state. Work request may also be submitted online at www.nc811.org.

3.7.4.1 The Locations of Underground Utilities

The locations of underground utilities shown are only approximate and the information provided may be incomplete. Contractor shall attempt to ascertain locations of existing underground utilities prior to and during digging operations.

3.7.4.2 Damage to Underground Utilities

Immediate notice shall be delivered to the Contracting Officer of any damage. The Contractor shall make temporary repairs immediately and shall provide permanent repairs as soon as practicable.

3.8 ELECTRICAL

3.8.1 Conduct of Electrical Work

As delineated in EM 385-1-1 electrical work is to be conducted in a de-energized state unless there is no alternative method for accomplishing the work. In those cases an energized work permit shall be obtained from the contracting officer. The energized work permit application shall be accompanied by the AHA and a summary of why the equipment/circuit needs to be worked energized. Underground electrical spaces must be certified safe for entry before entering to conduct work. Cables that will be cut must be positively identified and de-energized prior to performing each cut. Attachment of temporary grounds shall be in accordance with ASTM F855 and IEEE 1048. Perform all high voltage cable cutting remotely using hydraulic cutting tool. When racking in or live switching of circuit breakers, no additional person other than the switch operator will be allowed in the space during the actual operation. Plan so that work near energized parts is minimized to the fullest extent possible. Use of electrical outages clear of any energized electrical sources is the preferred method. When working in energized substations, only qualified electrical workers shall be permitted to enter. When work requires Contractor to work near energized circuits as defined by the NFPA 70, high voltage personnel must use personal protective equipment that includes, as a minimum, electrical hard hat, safety shoes, insulating gloves and electrical arc flash protection for personnel as required by NFPA 70E. Insulating blankets, hearing protection, and switching suits may also be required, depending on the specific job and as delineated in the Contractor's AHA. Contractor shall ensure that each employee is familiar with and complies with these procedures and 29 CFR 1910.147.

3.8.2 Arc Flash Risk/Hazard Analysis

Contractor shall provide an Arc Flash Risk/Hazard Analysis in accordance with NFPA 70E for all locations where workers may be exposed to arc flash hazard (work on energized electrical equipment). The Arc Flash Risk/Hazard Analysis shall be sealed and signed by a qualified professional engineer.

In addition to Arc Flash Risk/Hazard Analysis required for safety during construction, provide an Arc Flash Risk/Hazard Analysis for the entire electrical distribution system as constructed. Provide equipment labels as required by NFPA 70E.

3.8.3 Arc Flash Risk/Hazard Analysis Qualifications

Contractor shall engage the services of a qualified organization to provide Arc Flash Risk/Hazard Analysis of the electrical distribution system. Organization shall be independent of the supplier, manufacturer, and installer of the equipment. The organization shall be a first tier subcontractor. This work shall not be performed by a second tier subcontractor.

a. Submit name and qualifications of organization. Organization shall have been regularly engaged in providing Arc Flash Risk/Hazard Analysis for a minimum of 5 years.

b. Submit name and qualifications of the professional engineer performing the analysis. Include a list of three comparable jobs performed by the engineer with specific names and telephone numbers for reference.

3.8.4 Contractor Electrical Energized Work Permit

All work on energized electrical systems must have an approved/signed Contractor Electrical Energized Work Permit. The results of the Arc Flash Risk/Hazard Analysis shall be included in the "Contractor Electrical Energized Work Permit" request. Flame-resistant (FR) clothing and personal protective equipment (PPE) shall be rated for a minimum of 8 calories per square centimeter even if the flash hazard analysis indicates a lower value. A blank copy of the permit request is attached. An editable version may be obtained from the Contracting Officer.

3.8.5 Portable Extension Cords

Size portable extension cords in accordance with manufacturer ratings for the tool to be powered and protected from damage. Immediately remove from service all damaged extension cords. Portable extension cords shall meet the requirements of EM 385-1-1, NFPA 70E and OSHA electrical standards.

3.9 WORK IN CONFINED SPACES

Comply with the requirements in Section 34 of USACE EM 385-1-1, OSHA 29 CFR 1910, OSHA 29 CFR 1910.146, OSHA Directive CPL 2.100 and OSHA 29 CFR 1926. Any potential for a hazard in the confined space requires a permit system to be used.

a. Entry Procedures. Prohibit entry into a confined space by personnel for any purpose, including hot work, until the qualified person has conducted appropriate tests to ensure the confined or enclosed space is safe for the work intended and that all potential hazards are controlled or eliminated and documented. (See Section 34 of USACE EM 385-1-1 for entry procedures.) All hazards pertaining to the space shall be reviewed with each employee during review of the AHA.

b. Forced air ventilation is required for all confined space entry operations and the minimum air exchange requirements must be maintained to ensure exposure to any hazardous atmosphere is kept below its' action level.

c. Sewer wet wells require continuous atmosphere monitoring with audible alarm for toxic gas detection in addition to continuous forced air ventilation regardless of space classification.

-- End of Section --

THIS PAGE HAS BEEN INTENTIONALLY LEFT BLANK

CONTRACTOR ELECTRICAL ENERGIZED WORK PERMIT

PART I: TO BE COMPLETED BY THE REQUESTER: CONTRACT NUMBER: _____

JO/DO NUMBER_____ DATE OF REQUEST: _____

ANTICIPATED DATE WORK IS TO BE PERFORMED: _____.

(1) Description of circuit/equipment/job location:_____

_____

(2) Description of work to be done: _____

_____

(3) Justification of why the circuit/equipment cannot be de-energized or the work deferred until the next scheduled outage:

_____

_____

NOTE: ATTACHED COPY OF OUTAGE REQUESTS INCLUDING REASONS FOR DENIAL

_____ _____

Requester/Title Date

PART II: TO BE COMPLETED BY THE ELECTRICALLY QUALIFIED PERSONS DOING THE WORK:

	Check when Complete
(1) Detailed job description procedure to be used in performing the above detailed work: _____	☐
(2) Description of the Safe Work Practices to be employed: _____	☐
(3) Results of the Shock Hazard Analysis: _____	☐
(4) Determination of the Shock Protection Boundaries: _____	☐
(5) Results of the Arc Flash Hazard Analysis: _____	☐
Determination of the Arc Flash Protection Boundary: _____	☐
(6) Necessary personnel protective equipment to safely perform the assigned task:_____	☐
(7) Means employed to restrict the access of unqualified persons from the work area:_____	☐
(8) Evidence of completion of a Job Briefing including discussion of any job – related hazards:_____	☐

(10) Do you agree the above described work can be done safely? ☐ Yes ☐ No (If no, return to requester)

PART III: RECOMMEND APPROVAL(S) TO PERFORM THE WORK WHILE ELECTRICALLY ENERGIZED:

_____ _____ _____

OICC SIGNATURE **CI SIGNATURE** **OPS SIGNATURE**

_____

NAVFAC MIDLANT CONTRUCTION SAFETY MANAGER

PART IV: FINAL APPROVAL:

_____

NAVFAC MILANT COMMANDING OFFICER

NOTE: COMPLETED FORM WILL BE KEPT ON FILE BY MIDLANT CONSTRUCTION SAFETY MANAGER

CONTRACTOR ELECTRICAL ENERGIZED WORK PERMIT

1. Detailed job description procedure to be used in performing the above detailed work:

2. Description of the Safe Work Practices to be employed

SECTION 01 45 00.00 20

QUALITY CONTROL
09/14

PART 1 GENERAL

1.1 REFERENCES

The publications listed below form a part of this specification to the extent referenced. The publications are referred to in the text by the basic designation only.

AMERICAN SOCIETY OF HEATING, REFRIGERATING AND AIR-CONDITIONING ENGINEERS (ASHRAE)

ASHRAE 52.2	(2012; Errata 2013) Method of Testing General Ventilation Air-Cleaning Devices for Removal Efficiency by Particle Size

ASTM INTERNATIONAL (ASTM)

ASTM D6245	(2012) Using Indoor Carbon Dioxide Concentrations to Evaluate Indoor Air Quality and Ventilation
ASTM D6345	(2010) Selection of Methods for Active, Integrative Sampling of Volatile Organic Compounds in Air

INTERNATIONAL CODE COUNCIL (ICC)

ICC IBC	(2012) International Building Code

SHEET METAL AND AIR CONDITIONING CONTRACTORS' NATIONAL ASSOCIATION (SMACNA)

ANSI/SMACNA 008	(2007) IAQ Guidelines for Occupied Buildings Under Construction, 2nd Edition

U.S. ARMY CORPS OF ENGINEERS (USACE)

EM 385-1-1	(2014) Safety and Health Requirements Manual

U.S. DEPARTMENT OF DEFENSE (DOD)

UFC 1-200-01	(2013) General Building Requirements

U.S. GREEN BUILDING COUNCIL (USGBC)

LEED GBDC Ref Guide	(2009; R 2010) LEED Reference Guide for Green Building Design, Construction and Major Renovations of Commercial and Institutional Buildings including Core & Shell and K-12 Projects
LEED NC	(2009) Leadership in Energy and

Environmental Design(tm) New Construction Rating System

1.2 SUBMITTALS

Government approval is required for submittals with a "G" designation; submittals not having a "G" designation are for Contractor Quality Control approval. Submit the following in accordance with Section 01 33 00 SUBMITTAL PROCEDURES:

SD-01 Preconstruction Submittals

Construction Quality Control (QC) Plan; G

Submit a Construction QC Plan prior to start of construction.

LEED NC commissioning Plan; G

Indoor Air Quality (IAQ) Management Plan; G

SD-06 Test Reports

Acceptance Testing of Critical Systems Checklist

SD-07 Certificates

ICC IBC Special Inspections Certification; G

1.3 INFORMATION FOR THE CONTRACTING OFFICER

Prior to commencing work on construction, the Contractor can obtain a single copy set of the current report forms from the Contracting Officer. The report forms will consist of the Contractor Production Report, Contractor Production Report (Continuation Sheet), Contractor Quality Control (CQC) Report, (CQC) Report (Continuation Sheet), Preparatory Phase Checklist, Initial Phase Checklist, Rework Items List, and Testing Plan and Log.

Deliver the following to the Contracting Officer during Construction:

a. CQC Report: Mail or hand-carry the original (wet signatures) and one copy by 10:00 AM the next working day after each day that work is performed and for every seven consecutive calendar days of no-work.

b. Contractor Production Report: Mail or hand-carry the original (wet signatures) and one copy by 10:00 AM the next working day after each day that work is performed and for every seven consecutive calendar days of no-work, attached to the CQC Report.

c. Preparatory Phase Checklist: Original attached to the original CQC Report and one copy attached to each QC Report copy.

d. Initial Phase Checklist: Original attached to the original CQC Report and one copy attached to each QC Report copy.

e. QC Specialist Reports: Mail or hand-carry the original (wet signatures) and one copy by 10:00 AM the next working day after each day that work is performed.

f. Field Test Reports: Mail or hand-carry the original within two working days after the test is performed, attached to the original CQC Report and one copy attached to each QC Report copy.

g. Monthly Summary Report of Tests: Mail or hand-carry the original attached to the last QC Report of the month.

h. Testing Plan and Log: Mail or hand-carry the original attached to the last CQC Report of each month and one copy attached to each CQC Report copy. A copy of the final Testing Plan and Log shall be provided to the OMSI preparer for inclusion into the OMSI documentation.

i. Rework Items List: Mail or hand-carry the original attached to the last CQC Report of each month and one copy attached to each CQC Report copy.

j. CQC Meeting Minutes: Mail or hand-carry the original within two working days after the meeting is held, attached to the original CQC Report and one copy attached to each CQC Report copy.

k. QC Certifications: As required by the paragraph entitled "QC Certifications."

1.4 QC PROGRAM REQUIREMENTS

Establish and maintain a QC program as described in this section. This QC program is a key element in meeting the objectives of NAVFAC Commissioning. The QC program consists of a QC Organization, QC Plan, QC Plan Meeting(s), a Coordination and Mutual Understanding Meeting, QC meetings, three phases of control, submittal review and approval, testing, completion inspections, and QC certifications and documentation necessary to provide materials, equipment, workmanship, fabrication, construction and operations which comply with the requirements of this Contract. The QC program must cover on-site and off-site work and be keyed to the work sequence. No construction work or testing may be performed unless the QC Manager is on the work site. The QC Manager must report to an officer of the firm and not be subordinate to the Project Superintendent or the Project Manager. The QC Manager, Project Superintendent and Project Manager must work together effectively. Although the QC Manager is the primary individual responsible for quality control, all individuals will be held responsible for the quality of work on the job.

1.4.1 Commissioning

Commissioning (Cx) is a systematic process of ensuring that all building systems meet the requirements and perform interactively according to the Contract. Work with the Government Commissioning Authority (CA) in the development of the Commissioning Plan for this project. The QC Program is a key to this process by coordinating, verifying and documenting measures to achieve the following objectives:

a. LEED NC commissioning Plan: Include systems to be tested, test to be performed, testing schedule, and action plan for issues resolution.

b. Verify and document that the applicable equipment and systems are installed in accordance with the design intent as expressed through the Contract and according to the manufacturer's recommendations and industry accepted minimum standards.

c. Verify and document that equipment and systems receive complete operational checkout by the installing contractors.

d. Verify and document proper performance of equipment and systems.

e. Verify that Operation and Maintenance (O&M) documentation is complete.

f. Verify the Training Plan and training materials are accurate and provide correct instruction and documentation on the critical elements of the products, materials, and systems in the constructed facility. Verify that all identified Government operating personnel are trained.

g. Provide acceptance testing for critical systems as identified by NAVFAC Engineering & Construction Bulletin ECB issue 2008-03 dated 9/25/2008, attached. Provide the requirements identified under the "Ktr" column for all applicable project elements. The requirements identified are minimum requirements and do not reduce the requirements contained in the technical sections. Provide Acceptance Testing of Critical Systems Checklist showing compliance for all applicable elements for approval by the Contracting Officer.

1.4.2 Acceptance of the Construction Quality Control (QC) Plan

Acceptance of the QC Plan is required prior to the start of construction. The Contracting Officer reserves the right to require changes in the QC Plan and operations as necessary, including removal of personnel, to ensure the specified quality of work. The Contracting Officer reserves the right to interview any member of the QC organization at any time in order to verify the submitted qualifications. All QC organization personnel are subject to acceptance by the Contracting Officer. The Contracting Officer may require the removal of any individual for non-compliance with quality requirements specified in the Contract.

1.4.3 Preliminary Construction Work Authorized Prior to Acceptance

The only construction work that is authorized to proceed prior to the acceptance of the QC Plan is mobilization of storage and office trailers, temporary utilities, and surveying.

1.4.4 Notification of Changes

Notify the Contracting Officer, in writing, of any proposed changes in the QC Plan or changes to the QC organization personnel, a minimum of 10 work days prior to a proposed change. Proposed changes are subject to acceptance by the Contracting Officer.

1.5 QC ORGANIZATION

1.5.1 QC Manager

1.5.1.1 Duties

Provide a QC Manager at the work site to implement and manage the QC program. The only duties and responsibilities of the QC Manager are to manage and implement the QC program on this Contract. The QC Manager is required to attend the partnering meetings, QC Plan Meetings, Coordination and Mutual Understanding Meeting, conduct the QC meetings, perform the three phases of control except for those phases of control designated to be performed by QC Specialists, perform submittal review and approval, ensure

testing is performed and provide QC certifications and documentation required in this Contract. The QC Manager is responsible for managing and coordinating the three phases of control and documentation performed by the QC Specialists, testing laboratory personnel and any other inspection and testing personnel required by this Contract. The QC Manager is the manager of all QC activities.

1.5.1.2 Qualifications

An individual with a minimum of 5 years combined experience in the following positions: Project Superintendent, QC Manager, Project Manager, Project Engineer or Construction Manager on similar size and type construction contracts which included the major trades that are part of this Contract. The individual must have at least two years experience as a QC Manager. The individual must be familiar with the requirements of EM 385-1-1, and have experience in the areas of hazard identification, safety compliance, and sustainability.

1.5.2 Construction Quality Management Training

In addition to the above experience and education requirements, the QC Manager must have completed the course entitled "Construction Quality Management (CQM) for Contractors." If the QC Manager does not have a current certification, they must obtain the CQM for Contractors course certification within 90 days of award. This course is periodically offered by the Naval Facilities Engineering Command and the Army Corps of Engineers. Contact the Contracting Officer for information on the next scheduled class.

1.5.3 Alternate QC Manager Duties and Qualifications

Designate an alternate for the QC Manager at the work site to serve in the event of the designated QC Manager's absence. The period of absence may not exceed two weeks at one time, and not more than 30 workdays during a calendar year. The qualification requirements for the Alternate QC Manager must be the same as for the QC Manager.

1.5.4 QC Specialists Duties and Qualifications

Provide a separate QC Specialist at the work site for each of the areas of responsibilities, specified in Part 3, Execution, of the technical sections, who shall assist and report to the QC Manager and who may perform production related duties but must be allowed sufficient time to perform their assigned quality control duties. QC Specialists are required to attend the Coordination and Mutual Understanding Meeting, QC meetings and be physically present at the construction site to perform the three phases of control and prepare documentation for each definable feature of work in their area of responsibility at the frequency specified below.

1.5.4.1 Mechanical QC Specialist

Provide ICC IBC Special Inspections Certification from the following specialist(s):

Qualification/Experience in Area of Responsibility	Area of Responsibility	Frequency
Plumbing Inspector International Conference	Installation and Testing of Rainwater	Minimum 2 times a week during

Qualification/Experience in Area of Responsibility	Area of Responsibility	Frequency
of Building Officials (ICBO) Certified / 5 Years Minimum	Reclaimation System	installation and full-time during testing
Mechanical Inspector, International Conference of Building Officials (ICBO) Certified/ 5 years minimum	Installation and Testing of Boilers and Chillers	Minimum 3 times a week during installation and full-time during testing and TABs
Certified Elevator Inspector, certified by an organization accredited by ASME/ 5 years minimum	Pretesting to ensure safety code, specification, and building code complience; provide testing verification report prior to beginning final acceptance test	Once every two weeks during installation, full time during Pretesting
Registered Mechanical Engineer (PE)/ QC Specialist	Testing of Installed Mechanical Systems	Full time during testing and TABs

1.5.4.2 Soils Testing/Pile Installation and Testing QC Specialists

Provide ICC IBC Special Inspections Certification from the following specialist(s):

Qualification/Experience in Area of Responsibility	Area of Responsibility	Frequency
Registered Engineer (PE) or under the supervision of a (PE)	Soil testing, Pile Installation and Testing	As required in ICC IBC Chapter 17

1.5.4.3 Structural QC Specialists

Provide ICC IBC Special Inspections Certification from the following specialist(s):

Qualification/Experience in Area of Responsibility	Area of Responsibility	Frequency
Registered Engineer (PE) or under the supervision of a (PE)	As required by UFC 1-200-01 Section 2-17 Structural Inspections and Tests	As required by UFC 1-200-01 Section 2-17 Structural Inspections and Tests

1.5.4.4 Building Envelope QC Specialist

Provide ICC IBC Special Inspections Certification from the following specialist(s):

Qualification/Experience in Area of Responsibility	Area of Responsibility	Frequency
Roofing Manufacturer's Technical Representative/ 5 years minimum with roofing system used.	Installation and Testing of Roofing	Once a week during installation, two times a week during flashing installation and full time during roof testing

1.5.4.5 Electrical and Telecommunications Systems QC Specialists

Provide ICC IBC Special Inspections Certification from the following specialist(s):

Qualification/Experience in Area of Responsibility	Area of Responsibility	Frequency
Electrical Inspector Crew supervision for 10 years minimum Master Electrician licensed in North Carolina	Electrical Systems, All Division 26 Sections, and Division 33 Elec. Sections	Full time during installation and testing all systems
Telecommunications Systems Installation Specialist 10 years minimum experience in telecom-munications systems installation	Telecommunications Systems, All Division 27, 28 Sections and Division 33 Outside Plant(OSP)work	Full time during systems installation and testing

1.6 QUALITY CONTROL (QC) PLAN

1.6.1 Construction Quality Control (QC) Plan

1.6.1.1 Requirements

Provide, for acceptance by the Contracting Officer, a Construction QC Plan submitted in a three-ring binder that includes a table of contents, with major sections identified with tabs, with pages numbered sequentially, and that documents the proposed methods and responsibilities for accomplishing commissioning activities during the construction of the project:

a. QC ORGANIZATION: A chart showing the QC organizational structure.

b. NAMES AND QUALIFICATIONS: Names and qualifications, in resume format, for each person in the QC organization. Include the CQM for Contractors course certifications for the QC Manager and Alternate QC Manager as required by the paragraphs entitled "Construction Quality Management Training" and "Alternate QC Manager Duties and Qualifications".

c. DUTIES, RESPONSIBILITY AND AUTHORITY OF QC PERSONNEL: Duties, responsibilities, and authorities of each person in the QC organization.

d. OUTSIDE ORGANIZATIONS: A listing of outside organizations, such as architectural and consulting engineering firms, that will be employed by the Contractor and a description of the services these firms will provide.

e. APPOINTMENT LETTERS: Letters signed by an officer of the firm appointing the QC Manager and Alternate QC Manager and stating that they are responsible for implementing and managing the QC program as described in this Contract. Include in this letter the responsibility of the QC Manager and Alternate QC Manager to implement and manage the three phases of control, and their authority to stop work which is not in compliance with the Contract. Letters of direction are to be issued by the QC Manager to all other QC Specialists outlining their duties, authorities, and responsibilities. Include copies of the letters in the QC Plan.

f. SUBMITTAL PROCEDURES AND INITIAL SUBMITTAL REGISTER: Procedures for reviewing, approving, and managing submittals. Provide the name(s) of the person(s) in the QC organization authorized to review and certify submittals prior to approval. Provide the initial submittal of the Submittal Register as specified in Section 01 33 00 SUBMITTAL PROCEDURES.

g. TESTING LABORATORY INFORMATION: Testing laboratory information required by the paragraphs entitled "Accreditation Requirements", as applicable.

h. TESTING PLAN AND LOG: A Testing Plan and Log that includes the tests required, referenced by the specification paragraph number requiring the test, the frequency, and the person responsible for each test. Use Government forms to log and track tests.

i. PROCEDURES TO COMPLETE REWORK ITEMS: Procedures to identify, record, track, and complete rework items. Use Government forms to record and track rework items.

j. DOCUMENTATION PROCEDURES: Use Government form.

k. LIST OF DEFINABLE FEATURES: A Definable Feature of Work (DFOW) is a task that is separate and distinct from other tasks and has control requirements and work crews unique to that task. A DFOW is identified by different trades or disciplines and is an item or activity on the construction schedule. Include in the list of DFOWs, but not be limited to, all critical path activities on the NAS. Include all activities for which this specification requires QC Specialists or specialty inspection personnel. Provide separate DFOWs in the Network Analysis Schedule for each design development stage and submittal package.

l. PROCEDURES FOR PERFORMING THE THREE PHASES OF CONTROL: Identify procedures used to ensure the three phases of control to manage the quality on this project. For each DFOW, a Preparatory and Initial phase checklist will be filled out during the Preparatory and Initial phase meetings. Conduct the Preparatory and Initial Phases and meetings with a view towards obtaining quality construction by planning ahead and identifying potential problems for each DFOW.

m. PERSONNEL MATRIX: Not Applicable

n. PROCEDURES FOR COMPLETION INSPECTION: Procedures for identifying and documenting the completion inspection process. Include in these procedures the responsible party for punch out inspection, pre-final inspection, and final acceptance inspection.

o. TRAINING PROCEDURES AND TRAINING LOG: Procedures for coordinating and documenting the training of personnel required by the Contract.

p. ORGANIZATION AND PERSONNEL CERTIFICATIONS LOG: Procedures for coordinating, tracking and documenting all certifications on subcontractors, testing laboratories, suppliers, personnel, etc. QC Manager will ensure that certifications are current, appropriate for the work being performed, and will not lapse during any period of the contract that the work is being performed.

1.7 QC PLAN MEETINGS

Prior to submission of the QC Plan, the QC Manager will meet with the Contracting Officer to discuss the QC Plan requirements of this Contract. The purpose of this meeting is to develop a mutual understanding of the QC Plan requirements prior to plan development and submission and to agree on the Contractor's list of DFOWs.

1.8 COORDINATION AND MUTUAL UNDERSTANDING MEETING

After submission of the QC Plan, and prior to the start of construction, the QC Manager will meet with the Contracting Officer to present the QC program required by this Contract. When a new QC Manager is appointed, the coordination and mutual understanding meeting shall be repeated.

1.8.1 Purpose

The purpose of this meeting is to develop a mutual understanding of the QC details, including documentation, administration for on-site and off-site work, design intent, Cx, environmental requirements and procedures, coordination of activities to be performed, and the coordination of the Contractor's management, production, and QC personnel. At the meeting, the Contractor will be required to explain in detail how three phases of control will be implemented for each DFOW, as well as how each DFOW will be affected by each management plan or requirement as listed below:

a. Waste Management Plan.

b. IAQ Management Plan.

c. Procedures for noise and acoustics management.

d. Environmental Protection Plan.

e. Environmental regulatory requirements.

f. Cx Plan.

1.8.2 Coordination of Activities

Coordinate activities included in various sections to assure efficient and orderly installation of each component. Coordinate operations included under different sections that are dependent on each other for proper installation and operation. Schedule construction operations with consideration for indoor air quality as specified in the IAQ Management Plan. Coordinate prefunctional tests and startup testing with Cx.

1.8.3 Attendees

As a minimum, the Contractor's personnel required to attend include an officer of the firm, the Project Manager, Project Superintendent, QC Manager, Alternate QC Manager, QC Specialists, CA, Environmental Manager, and subcontractor representatives. Each subcontractor who will be assigned QC responsibilities shall have a principal of the firm at the meeting. Minutes of the meeting will be prepared by the QC Manager and signed by the Contractor and the Contracting Officer. Provide a copy of the signed minutes to all attendees and include in the QC Plan.

1.9 QC MEETINGS

After the start of construction, conduct QC meetings once every two weeks by the QC Manager at the work site with the Project Superintendent, QC Specialists, the CA, and the foremen who are performing the work of the DFOWs. The QC Manager is to prepare the minutes of the meeting and provide a copy to the Contracting Officer within two working days after the meeting. The Contracting Officer may attend these meetings. As a minimum, accomplish the following at each meeting:

a. Review the minutes of the previous meeting.

b. Review the schedule and the status of work and rework.

c. Review the status of submittals.

d. Review the work to be accomplished in the next two weeks and documentation required.

e. Resolve QC and production problems (RFI, etc.).

f. Address items that may require revising the QC Plan.

g. Review Accident Prevention Plan (APP).

h. Review environmental requirements and procedures.

i. Review Waste Management Plan.

j. Review IAQ Management Plan.

k. Review Environmental Management Plan.

l. Review the status of training completion.

m. Review Cx Plan and progress.

1.10 DESIGN REVIEW AND DOCUMENTATION

1.10.1 Contract Document Review

Review the Contract documents to verify that Cx is adequately specified, and that each commissioned system is likely to meet the design intent relative to functionality, energy performance, water performance, maintainability, sustainability, system cost, indoor environmental quality, and local environmental impacts.

1.11 THREE PHASES OF CONTROL

Adequately cover both on-site and off-site work with the Three Phases of Control and include the following for each DFOW.

1.11.1 Preparatory Phase

Notify the Contracting Officer at least two work days in advance of each preparatory phase meeting. The meeting will be conducted by the QC Manager and attended by the QC Specialists, the Project Superintendent, the CA, and the foreman responsible for the DFOW. When the DFOW will be accomplished by a subcontractor, that subcontractor's foreman shall attend the preparatory phase meeting. Document the results of the preparatory phase actions in the daily Contractor Quality Control Report and in the Preparatory Phase Checklist. Perform the following prior to beginning work on each DFOW:

a. Review each paragraph of the applicable specification sections.

b. Review the Contract drawings.

c. Verify that field measurements are as indicated on construction and/or shop drawings before confirming product orders, in order to minimize waste due to excessive materials.

d. Verify that appropriate shop drawings and submittals for materials and equipment have been submitted and approved. Verify receipt of approved factory test results, when required.

e. Review the testing plan and ensure that provisions have been made to provide the required QC testing.

f. Examine the work area to ensure that the required preliminary work has been completed.

g. Coordinate the schedule of product delivery to designated prepared areas in order to minimize site storage time and potential damage to stored materials.

h. Arrange for the return of shipping/packaging materials, such as wood pallets, where economically feasible.

i. Examine the required materials, equipment and sample work to ensure that they are on hand and conform to the approved shop drawings and submitted data.

j. Discuss specific controls used and construction methods, construction tolerances, workmanship standards, and the approach that will be used to provide quality construction by planning ahead and identifying potential problems for each DFOW.

k. Review the APP and appropriate Activity Hazard Analysis (AHA) to ensure that applicable safety requirements are met, and that required Material Safety Data Sheets (MSDS) are submitted.

l. Review the Cx Plan and ensure all preliminary work items have been completed and documented.

1.11.2 Initial Phase

Notify the Contracting Officer at least two work days in advance of each initial phase. When construction crews are ready to start work on a DFOW, conduct the initial phase with the QC Specialists, the Project Superintendent, and the foreman responsible for that DFOW. Observe the initial segment of the DFOW to ensure that the work complies with Contract requirements. Document the results of the initial phase in the daily CQC Report and in the Initial Phase Checklist. Repeat the initial phase for each new crew to work on-site, or when acceptable levels of specified quality are not being met. Perform the following for each DFOW:

a. Establish the quality of workmanship required.

b. Resolve conflicts.

c. Ensure that testing is performed by the approved laboratory.

d. Check work procedures for compliance with the APP and the appropriate AHA to ensure that applicable safety requirements are met.

e. Review the Cx Plan and ensure all preparatory work items have been completed and documented.

1.11.3 Follow-Up Phase

Perform the following for on-going work daily, or more frequently as necessary, until the completion of each DFOW and document in the daily CQC Report:

a. Ensure the work is in compliance with Contract requirements.

b. Maintain the quality of workmanship required.

c. Ensure that testing is performed by the approved laboratory.

d. Ensure that rework items are being corrected.

e. Assure manufacturers representatives have performed necessary inspections if required and perform safety inspections.

f. Review the Cx Plan and ensure all work items, testing, and documentation has been completed.

1.11.4 Additional Preparatory and Initial Phases

Conduct additional preparatory and initial phases on the same DFOW if the quality of on-going work is unacceptable, if there are changes in the applicable QC organization, if there are changes in the on-site production supervision or work crew, if work on a DFOW is resumed after substantial period of inactivity, or if other problems develop.

1.11.5 Notification of Three Phases of Control for Off-Site Work

Notify the Contracting Officer at least two weeks prior to the start of the preparatory and initial phases.

1.12 SUBMITTAL REVIEW AND APPROVAL

Procedures for submission, review and approval of submittals are described in Section 01 33 00 SUBMITTAL PROCEDURES.

1.13 TESTING

Except as stated otherwise in the specification sections, perform sampling and testing required under this Contract.

1.13.1 Accreditation Requirements

Construction materials testing laboratories must be accredited by a laboratory accreditation authority and will be required to submit a copy of the Certificate of Accreditation and Scope of Accreditation. The laboratory's scope of accreditation must include the appropriate ASTM standards (E 329, C 1077, D 3666, D 3740, A 880, E 543) listed in the technical sections of the specifications. Laboratories engaged in Hazardous Materials Testing shall meet the requirements of OSHA and EPA. The policy applies to the specific laboratory performing the actual testing, not just the Corporate Office.

1.13.2 Laboratory Accreditation Authorities

Laboratory Accreditation Authorities include the National Voluntary Laboratory Accreditation Program (NVLAP) administered by the National Institute of Standards and Technology at http://ts.nist.gov/ts/htdocs/210/214/214.htm , the American Association of State Highway and Transportation Officials (AASHTO) program at http://www.transportation.org/aashto/home.nsf/frontpage , International Accreditation Services, Inc. (IAS) at http://www.iasonline.org, U. S. Army Corps of Engineers Materials Testing Center (MTC)at http://www.wes.army.mil/SL/MTC/, the American Association for Laboratory Accreditation (A2LA) program at http://www.a2la.org/, the Washington Association of Building Officials (WABO) at http://www.wabo.org/ (Approval authority for WABO is limited to projects within Washington State), and the Washington Area Council of Engineering Laboratories (WACEL) at http://www.wacel.org/labaccred.html (Approval authority by WACEL is limited to projects within Facilities Engineering Command (FEC) Washington geographical area).

1.13.3 Capability Check

The Contracting Officer retains the right to check laboratory equipment in the proposed laboratory and the laboratory technician's testing procedures, techniques, and other items pertinent to testing, for compliance with the standards set forth in this Contract.

1.13.4 Test Results

Cite applicable Contract requirements, tests or analytical procedures used. Provide actual results and include a statement that the item tested or analyzed conforms or fails to conform to specified requirements. If the item fails to conform, notify the Contracting Officer immediately. Conspicuously stamp the cover sheet for each report in large red letters "CONFORMS" or "DOES NOT CONFORM" to the specification requirements, whichever is applicable. Test results must be signed by a testing laboratory representative authorized to sign certified test reports. Furnish the signed reports, certifications, and other documentation to the

Contracting Officer via the QC Manager. Furnish a summary report of field tests at the end of each month, per the paragraph entitled "INFORMATION FOR THE CONTRACTING OFFICER".

1.13.5 Test Reports and Monthly Summary Report of Tests

Furnish the signed reports, certifications, and a summary report of field tests at the end of each month to the Contracting Officer. Attach a copy of the summary report to the last daily Contractor Quality Control Report of each month. Provide a copy of the signed test reports and certifications to the OMSI preparer for inclusion into the OMSI documentation.

1.14 QC CERTIFICATIONS

1.14.1 CQC Report Certification

Contain the following statement within the CQC Report: "On behalf of the Contractor, I certify that this report is complete and correct and equipment and material used and work performed during this reporting period is in compliance with the contract drawings and specifications to the best of my knowledge, except as noted in this report."

1.14.2 Invoice Certification

Furnish a certificate to the Contracting Officer with each payment request, signed by the QC Manager, attesting that as-built drawings are current, coordinated and attesting that the work for which payment is requested, including stored material, is in compliance with Contract requirements.

1.14.3 Completion Certification

Upon completion of work under this Contract, the QC Manager shall furnish a certificate to the Contracting Officer attesting that "the work has been completed, inspected, tested and is in compliance with the Contract." Provide a copy of this final QC Certification for completion to the OMSI preparer for inclusion into the OMSI documentation.

1.15 COMPLETION INSPECTIONS

1.15.1 Punch-Out Inspection

Near the completion of all work or any increment thereof, established by a completion time stated in the Contract Clause entitled "Commencement, Prosecution, and Completion of Work," or stated elsewhere in the specifications, the QC Manager and the CA must conduct an inspection of the work and develop a "punch list" of items which do not conform to the approved drawings, specifications and Contract. Include in the punch list any remaining items on the "Rework Items List", which were not corrected prior to the Punch-Out Inspection. Include within the punch list the estimated date by which the deficiencies will be corrected. Provide a copy of the punch list to the Contracting Officer. The QC Manager, or staff, must make follow-on inspections to ascertain that all deficiencies have been corrected. Once this is accomplished, notify the Government that the facility is ready for the Government "Pre-Final Inspection".

1.15.2 Pre-Final Inspection

The Government and QCM will perform this inspection to verify that the

facility is complete and ready to be occupied. A Government "Pre-Final Punch List" will be documented by the CQM as a result of this inspection. The QC Manager will ensure that all items on this list are corrected prior to notifying the Government that a "Final" inspection with the Client can be scheduled. Any items noted on the "Pre-Final" inspection must be corrected in a timely manner and be accomplished before the contract completion date for the work,or any particular increment thereof, if the project is divided into increments by separate completion dates.

1.15.3 Final Acceptance Inspection

Notify the Contracting Officer at least 14 calendar days prior to the date a final acceptance inspection can be held. State within the notice that all items previously identified on the pre-final punch list will be corrected and acceptable, along with any other unfinished Contract work, by the date of the final acceptance inspection. The Contractor must be represented by the QC Manager, the Project Superintendent, the CA, and others deemed necessary. Attendees for the Government will include the Contracting Officer, other FEAD/ROICC personnel, and personnel representing the Client. Failure of the Contractor to have all contract work acceptably complete for this inspection will be cause for the Contracting Officer to bill the Contractor for the Government's additional inspection cost in accordance with the Contract Clause entitled "Inspection of Construction."

1.16 DOCUMENTATION

Maintain current and complete records of on-site and off-site QC program operations and activities.

1.16.1 Construction Documentation

Reports are required for each day that work is performed and must be attached to the Contractor Quality Control Report prepared for the same day. Maintain current and complete records of on-site and off-site QC program operations and activities. The forms identified under the paragraph "INFORMATION FOR THE CONTRACTING OFFICER" will be used. Reports are required for each day work is performed. Account for each calendar day throughout the life of the Contract. Every space on the forms must be filled in. Use N/A if nothing can be reported in one of the spaces. The Project Superintendent and the QC Manager must prepare and sign the Contractor Production and CQC Reports, respectively. The reporting of work must be identified by terminology consistent with the construction schedule. In the "remarks" sections of the reports, enter pertinent information including directions received, problems encountered during construction, work progress and delays, conflicts or errors in the drawings or specifications, field changes, safety hazards encountered, instructions given and corrective actions taken, delays encountered and a record of visitors to the work site, quality control problem areas, deviations from the QC Plan, construction deficiencies encountered, meetings held. For each entry in the report(s), identify the Schedule Activity No. that is associated with the entered remark.

1.16.2 Quality Control Validation

Establish and maintain the following in a series of three ring binders. Binders shall be divided and tabbed as shown below. These binders must be readily available to the Contracting Officer during all business hours.

a. All completed Preparatory and Initial Phase Checklists, arranged by

specification section.

b. All milestone inspections, arranged by Activity Number.

c. An up-to-date copy of the Testing Plan and Log with supporting field test reports, arranged by specification section.

d. Copies of all contract modifications, arranged in numerical order. Also include documentation that modified work was accomplished.

e. An up-to-date copy of the Rework Items List.

f. Maintain up-to-date copies of all punch lists issued by the QC staff to the Contractor and Sub-Contractors and all punch lists issued by the Government.

g. Commissioning documentation including Cx checklists, schedules, tests, and reports.

1.16.3 Reports from the QC Specialist(s)

Reports are required for each day that work is performed in their area of responsibility. QC Specialist reports shall include the same documentation requirements as the CQC Report for their area of responsibility. QC Specialist reports are to be prepared, signed and dated by the QC Specialists and shall be attached to the CQC Report prepared for the same day.

1.16.4 Testing Plan and Log

As tests are performed, the Government CA and the QC Manager will record on the "Testing Plan and Log" the date the test was performed and the date the test results were forwarded to the Contracting Officer. Attach a copy of the updated "Testing Plan and Log" to the last daily CQC Report of each month, per the paragraph "INFORMATION FOR THE CONTRACTING OFFICER". Provide a copy of the final "Testing Plan and Log" to the OMSI preparer for inclusion into the OMSI documentation.

1.16.5 Rework Items List

The QC Manager must maintain a list of work that does not comply with the Contract, identifying what items need to be reworked, the date the item was originally discovered, the date the item will be corrected by, and the date the item was corrected. There is no requirement to report a rework item that is corrected the same day it is discovered. Attach a copy of the "Rework Items List" to the last daily CQC Report of each month. The Contractor is responsible for including those items identified by the Contracting Officer.

1.16.6 As-Built Drawings

The QC Manager is required to ensure the as-built drawings, required by Section 01 78 00 CLOSEOUT SUBMITTALS are kept current on a daily basis and marked to show deviations which have been made from the Contract drawings. Ensure each deviation has been identified with the appropriate modifying documentation (e.g. PC No., Modification No., Request for Information No., etc.). The QC Manager or QC Specialist assigned to an area of responsibility must initial each revision. Upon completion of work, the QC Manager will furnish a certificate attesting to the accuracy of the

as-built drawings prior to submission to the Contracting Officer.

1.17 NOTIFICATION ON NON-COMPLIANCE

The Contracting Officer will notify the Contractor of any detected non-compliance with the Contract. Take immediate corrective action after receipt of such notice. Such notice, when delivered to the Contractor at the work site, shall be deemed sufficient for the purpose of notification. If the Contractor fails or refuses to comply promptly, the Contracting Officer may issue an order stopping all or part of the work until satisfactory corrective action has been taken. No part of the time lost due to such stop orders will be made the subject of claim for extension of time for excess costs or damages by the Contractor.

1.18 CONSTRUCTION INDOOR AIR QUALITY (IAQ) MANAGEMENT PLAN

Submit an IAQ Management Plan within 15 days after Contract award and not less than 10 days before the preconstruction meeting. Revise and resubmit Plan as required by the Contracting Officer. Make copies of the final plan available to all workers on site. Include provisions in the Plan to meet the requirements specified below and to ensure safe, healthy air for construction workers and building occupants.

1.18.1 Requirements During Construction

Provide for evaluation of indoor Carbon Dioxide concentrations in accordance with ASTM D6245. Provide for evaluation of volatile organic compounds (VOCs) in indoor air in accordance with ASTM D6345. Use filters with a Minimum Efficiency Reporting Value (MERV) of 8 in permanently installed air handlers during construction.

1.18.1.1 Control Measures

Meet or exceed the requirements of ANSI/SMACNA 008, Chapter 3, to help minimize contamination of the building from construction activities. The five requirements of this manual which must be adhered to are described below:

a. HVAC protection: Isolate return side of HVAC system from surrounding environment to prevent construction dust and debris from entering the duct work and spaces.

b. Source control: Use low emitting paints and other finishes, sealants, adhesives, and other materials as specified. When available, cleaning products shall have a low VOC content and be non-toxic to minimize building contamination. Utilize cleaning techniques that minimize dust generation. Cycle equipment off when not needed. Prohibit idling motor vehicles where emissions could be drawn into building. Designate receiving/storage areas for incoming material that minimize IAQ impacts.

c. Pathway interruption: When pollutants are generated use strategies such as 100 percent outside air ventilation or erection of physical barriers between work and non-work areas to prevent contamination.

d. Housekeeping: Clean frequently to remove construction dust and debris. Promptly clean up spills. Remove accumulated water and keep work areas dry to discourage the growth of mold and bacteria. Take extra measures when hazardous materials are involved.

e. Scheduling: Control the sequence of construction to minimize the absorption of VOCs by other building materials.

1.18.1.2 Moisture Contamination

a. Remove accumulated water and keep work dry.

b. Use dehumidification to remove moist, humid air from a work area.

c. Do not use combustion heaters or generators inside the building.

d. Protect porous materials from exposure to moisture.

e. Remove and replace items which remain damp for more than a few hours.

1.18.2 Requirements after Construction

After construction ends and prior to occupancy, conduct a building flush-out or test the indoor air contaminant levels. Flush-out must be a minimum two-weeks with MERV-13 filtration media as determined by ASHRAE 52.2 at 100 percent outside air, or in accordance with LEED GBDC Ref Guide. Air contamination testing must be consistent with EPA's current Compendium of Methods for the Determination of Air Pollutants in Indoor Air, and with the LEED GBDC Ref Guide. After building flush-out or testing and prior to occupancy, replace filtration media. Filtration media must have a MERV of 13 as determined by ASHRAE 52.2.

PART 2 PRODUCTS

Not Used.

PART 3 EXECUTION

3.1 PREPARATION

Designate receiving/storage areas for incoming material to be delivered according to installation schedule and to be placed convenient to work area in order to minimize waste due to excessive materials handling and misapplication. Store and handle materials in a manner as to prevent loss from weather and other damage. Keep materials, products, and accessories covered and off the ground, and store in a dry, secure area. Prevent contact with material that may cause corrosion, discoloration, or staining. Protect all materials and installations from damage by the activities of other trades.

-- End of Section --

CAPITAL IMPROVEMENTS

ENGINEERING & CONSTRUCTION Bulletin

Issue No. 2008-03 **25 September 2008** **Type: Policy**

Subject: **Acceptance Testing of Critical Systems**

Reference: (a) ECB 2007-01 Proper use of Military Construction Funds, 13 October 2006

Enclosure: (1) Roles and Responsibilities (R&R) Matrices

Cancelled: NAVFAC Instruction 12271.1: NAVFAC Total Building Commissioning Policy, dated 23 October 2003

1. Purpose.

To focus NAVFAC's technical oversight of acceptance testing during construction on five critical areas (electrical, fire and life safety, mechanical, roofing, and underwater structures) to ensure the constructed facility performs as intended and meets the needs of the supported commands; to define the use of Post Construction Award Services (PCAS) funding as it applies to the Capital Improvements Business Line (CIBL) in-house acceptance testing and technical support efforts.

2. Background.

NAVFAC has identified five critical areas that have consistently caused problems in facilities delivered to its supported commands. These areas are electrical, fire and life safety, mechanical, roofing systems, and underwater structures. These five critical areas were identified as requiring ongoing, thorough construction technical oversight in support of acceptance testing. A NAVFAC Team of technical experts determined how to apply responsible oversight to these five critical areas using one-half of PCAS funds. Each Team compiled all systems / sub-systems and developed R&R matrices (enclosure (1)). Each matrix identifies responsibilities of each of the contributors to the quality and functionality of the completed project, including the contractor, Facilities Engineering Command's (FEC) Integrated Product Team (IPT) and Facilities Engineering and Acquisition Division (FEAD) technical staff. The matrices served as the basis for determining the level of effort (man hours) to perform the technical support for acceptance testing. The following table shows the format in the R&R matrices. Each heading is provided with a description of each column's intent:

System	Sub-System	Phase	Element	Ktr QC-DOR (Project Req'ts)	FEAD (SIOH)	FEC (PCAS)
Major system grouping	Specific system	Phase of the project where it will occur	The item or task to be accomplished	What actions, if any, need to be taken by the appropriate party? (Indicates funding method)		

The contractor is still responsible for delivering a high quality and properly functioning facility via the Contractor Quality Control (CQC) program and commissioning process (including documentation and training).

3. Policy and Implementation.

The following will apply to the performance of acceptance testing for the five critical areas:

a. This applies to Military Construction (MILCON) and all Special Projects with costs over $750,000 for design-build and design-bid-build contracts.
b. The Project Manager (PM) shall manage, in coordination with the Construction Manager (CM), the project PCAS funds. The PM shall ensure that PCAS funding is used in accordance with reference (a).
c. The average funds available to support the CIBL acceptance testing in-house effort will be one-half the total PCAS funds.
d. Enclosure (1) defines the roles and responsibilities of the contractor, FEC's IPT and FEAD technical staff.
e. While the FEAD will be responsible for managing the overall construction project, the FEC's IPT will be responsible for the technical support for the acceptance testing effort associated with the five critical areas. Technical support from the FEAD can be leveraged as capabilities and resources allow, and must be coordinated between the FEC IPT and FEAD. The support for the five critical areas will be provided by engineers that have been trained and are experienced in that area.
f. The CM will manage the day-to-day coordination with the contractor and coordinate the necessary reach back to the FEC IPT for technical support for acceptance testing.
g. PCAS must be budgeted and included in the project costs. The PCAS costs must be shown in the budget estimate summary sheets (BESS) on the DD 1391.
h. The Public Works Business Line (PWBL) has agreed to designate representatives who are responsible for facility maintenance and sustainment to perform the following:
    i. Participate in the submittal review process by providing comments on submittals for the critical areas.
    ii. Be present for the final inspections and tests.
    iii. Be present for all system training.
    iv. Provide feedback and lessons learned to the FEC CI4.
i. It is recommended that the designated representatives, who are responsible for maintenance and sustainment visit the site during construction to become familiar with the building systems.
j. The efforts in paragraph 3.h above will not be funded using PCAS or supervision, inspection and overhead (SIOH).

JOSEPH E. GOTT, P.E.
Chief Engineer and Director,
Capital Improvements

Note: This ECB has been coordinated with Headquarters, U.S. Marine Corps (Code LFF).

ELECTRICAL ENGINEERING ROLES and RESPONSIBILITIES

System	Sub-Systems	Phase	Elements	EE QC / DOR (Ktr)	FEAD (SIOH)	FEC (PCAS)
All Systems	**Submittals & Plans**	Pre-Construction	Qualifications of Installer, Shop Drawings, Data Sheets, and Calculations (as applicable)	A	C	S
			QC Plan		A	S
			Performance Verification Plan		A	S
	Certificates & Reports	Construction	Functional Acceptance Test Procedure	A	C	S
			Preliminary Test Reports	A	RA	S
			Final Acceptance Test Reports	A	C	S
Power Generators	**Single Operation Generator Sets**	Test Preparation	Perform fuel oil piping tests	V	C	-
			Perform acceptance checks and tests	V	W	C
			Perform preliminary operations	V	W	C
		Final Test	Test all engine protective shutdown devices	V	—	W
			Test all pre-shutdown alarm devices	V	—	W
			Test crank cycle/terminate relay	V	—	W
			Test automatic and manual operations in all possible scenarios involving loss of utility, return of utility, manual starting, and emergency stop	V	—	W
			Perform load test	V	—	W
	Automatic Transfer Switches	Test Preparation	Perform acceptance checks and tests	V	W	C
		Final Test	Simulate loss of normal power	—	—	W
			Simulate return of normal power	V	—	W
			Simulate loss of emergency power	V	—	W
			Simulate all forms of single-phase conditions	V	—	W
			Verify operation of normal power voltage-sensing relays	V	—	W
			Verify engine start sequence	V	—	W
			Verify time delay upon transfer	V	—	W
			Verify operation of alternate power voltage-sensing relays	V	—	W
			Verify automatic transfer operation	V	—	W
			Verify interlocks and limit switch operation	V	—	W
			Verify time delay and retransfer upon normal power restoration	V	—	W
400-Hertz Solid State Frequency Converter	**All**	Test Preparation	Perform acceptance checks and tests	V	W	C
			Verify equipment nameplate information with specifications and approved shop drawings	V	W	—
			Inspect physical and mechanical condition	V	W	—
			Verify correct equipment grounding	V	W	—
			Perform resistance measurements through all bolted connections	V	W	—
			Perform preliminary operations	V	W	C
		Final Test	Test all control devices	V	—	W
			Test all protective shutdown devices	V	—	W
			Perform load test	V	—	W
			Perform transient tests	V	—	W
			Perform harmonic distortion tests	V	—	W
			Perform automatic line drop compensation test	V	—	W

KEY = A - Approve, R - Review, W - Witness, RA - Receipt Acknowledge, S - Surveilance Review, V- Verification and Testing, C - Copy, QA - Quality Assurance

ELECTRICAL ENGINEERING ROLES and RESPONSIBILITIES

System	Sub-Systems	Phase	Elements	EE QC / DOR (Ktr)	FEAD (SIOH)	FEC (PCAS)
Uninterruptible Power Supply (UPS)	**All**	Test Preparation	Verify ventilation equipment in UPS and battery rooms are operational	V	W	—
			Verify battery cells are filled with electrolyte	V	W	—
			Verify polarity of DC connections and phase rotation of AC connections	V	W	—
			Verify AC power to all equipment	V	W	—
			Verify remote monitors and control wiring	V	W	—
			Verify UPS system and battery system is properly grounded	V	W	—
			Verify operation of emergency shower and eye wash	V	W	—
			Verify control connections between UPS and emergency engine generator signal contacts	V	W	—
			Verify control connections between UPS module and UPS maintenance bypass cabinet	V	W	—
			Perform acceptance checks and tests	V	W	C
		Final Test	Perform load tests	V	—	W
			Perform full-load burn in test	V	—	W
			Perform battery discharge test	V	—	W
			Perform battery performance test	V	—	W
			Perform UPS in conjunction with emergency generator service (if applicable)	V	—	W
Lighting	**Interior Lighting**	Final Test	Verify electronic dimming ballasts operatation over full range of dimming capability without any visually detectable flicker	V	W	—
			Verify occupancy sensors operation	V	W	—
			Verify lighting controls operation	V	W	—
			Verify lighting output levels	V	W	—
	Exterior Lighting	Final Test	Verify photocell aiming and operation	V	W	—
			Verify lighting controls operation	V	W	—
			Verify lighting output levels	V	W	—
Transformers	**Single-Phase Pad-Mounted Transformers**	Factory Routine Tests	Perform resistance measurements, polarity, ratio, no-load losses and excitation current, load losses and impedance voltage, dielectric, leak (liquid-filled), and disolved gas analysis (liquid-filled) tests	—	—	W
		Field Tests	Perform acceptance checks and tests	V	W	C
	Three-Phase Pad-Mounted Transformers	Factory Routine Tests	Perform resistance measurements, polarity, ratio, no-load losses and excitation current, load losses and impedance voltage, dielectric, leak (liquid-filled), and disolved gas analysis (liquid-filled) tests	—	—	W
		Field Tests	Perform acceptance checks and tests	V	W	C
	Secondary Unit Substations	Factory Routine Tests	Perform resistance measurements, polarity, ratio, no-load losses and excitation current, load losses and impedance voltage, and dielectric tests	—	—	W
		Field Tests	Perform acceptance checks and tests	V	W	C
	Primary Unit Substations	Factory Routine Tests	Perform resistance measurements, polarity, ratio, no-load losses and excitation current, load losses and impedance voltage, dielectric, leak (liquid-filled), and disolved gas analysis (liquid-filled) tests	—	—	W
		Field Tests	Perform acceptance checks and tests	V	W	C

KEY = A - Approve, R - Review, W - Witness, RA - Receipt Acknowledge, S - Surveilance Review, V- Verification and Testing, C - Copy, QA - Quality Assurance

ELECTRICAL ENGINEERING ROLES and RESPONSIBILITIES

System	Sub-Systems	Phase	Elements	EE QC / DOR (Ktr)	FEAD (SIOH)	FEC (PCAS)
Switchgear/ Switchboards	**Metal-Clad Switchgear / Switchboards and Busway**	Factory Production Tests	60 Hz dielectric, mechanical operation, electrical operation and control wiring, and ground fault sensing equipment tests	—	—	W
		Test Preparation	Perform acceptance checks and tests	V	W	C
Cable	**Medium-Voltage Cable, Terminations, and Splices**	Test Preparation	Perform acceptance checks and tests	V	W	—
		Field Tests	Perform shield continuity and very low frequency (VLF) tests	V	W	—
SF6 Switch - Padmount	**Medium Voltage Pad-mounted Switches**	Factory Production Tests	60 Hz dielectric, mechanical operation, electrical operation and control wiring, and ground fault sensing equipment tests	—	—	W
		Test Preparation	Perform acceptance checks and tests	V	W	C
Airfield Lighting	**Airfield Lighting Circuits**	Field Tests	Airfield lighting circuits low voltage continuity and high voltage insulation resistance tests	V	W	—
		Field Tests	Airfield lighting circuit operating test	V	W	—
	Counterpoise	Field Tests	Counterpoise system test	V	W	—
	Constant	Field Tests	Perform open circuit protector and load tests	V	W	—
	All	Field Tests	Perform airfield lighting system operation test	V	W	—
Cathodic Protection	**Cathodic Protection by Galvanic Anodes**	Field Tests	Perform non-destructive testing of anodes	V	W	—
			Perform destructive testing of anodes	V	W	—
			Perform base potential tests, insulation joint testing, electrical continuity testing, pipe casing testing, anode-to-soil potential tests, anode output tests, protected potential measurement tests, and interference testing.	V	W	—
			Perform field operation tests.	V	—	W
	Cathodic Protection by Impressed Current	Field Tests	Perform non-destructive testing of anodes	V	W	—
			Perform destructive testing of anodes	V	W	—
			Perform base potential tests, permanent reference electrode calibration, insulation joint testing, electrical continuity testing, rectifier system testing, pipe casing testing, protected potential measurement tests, and interference testing.	V	W	—
			Perform field operation tests.	V	—	W

KEY = A - Approve, R - Review, W - Witness, RA - Receipt Acknowledge, S - Surveilance Review, V- Verification and Testing, C - Copy, QA - Quality Assurance

FIRE PROTECTION ENGINEERING ROLES and RESPONSIBILITIES

System	Sub-Systems	Phase	Elements	FP QC / DOR (Ktr)	FEAD (SIOH)	FEC (PCAS)
All Systems	Required Submittals		QC Plan	—	A	S
			Performance Verification Plan	—	A	S
		Test Prep & Preliminary Certifications	Field Visit/Construction Surveillance Reports	—	S	QA
		Final Test Reports &	Final Acceptance Test Reports	A	S	QA or A
			Final Life Safety/Fire Protection Certification	—	S	A
Sprinkler Systems	Wet Pipe Sprinkler Systems	Test Preparation	Process/review system submittal (Qualifications of Installer, Shop Drawings, Data Sheets & Calcs)	A	C	S
			Process/review Preliminary Test Reports & Certifications	—	RA	S
			Witness hydrostatic test.	A	C	—
			Witness flush test.	V	W	—
			Visually inspect system for adherence to plan, completeness, and adequacy of installation.	A	QA	QA
			Visually inspect pipe pentrations	A	QA	QA
			Visually inspect sprinklers for location and that they are not painted / taped.	A	QA	QA
			Visually inspect seismic bracing	A	C	QA
			Operate control valves {Other than main service entrance riser}	A	C	QA
			Visually inspect check valve installation	A	C	QA
			Visually inspect test/drain discharge locations	A	C	QA
			Witness backflow preventer forward-flow test (NFPA 13, §16.2.5).	V	W	W
			Inspect/test alarm valve assembly and water service entrance(pipe sleeves, thrust rods, etc.), including valves, flow switch & tamper switches)	V	C	W
			Inspect/test flow control valve assembly	V	C	W
	Additional requirements for Dry Pipe, Preaction - Deluge		Process system submittal (Qualifications of Installer, Shop Drawings, Data Sheets & Calcs)	A	C	S
			Preliminary Test Reports & Certifications	—	RA	S
			Witness hydrostatic test.	A	C	—
			Witness flush test.	V	W	—
		Final Test	Verify Low-point drains are provided	V	—	QA
			Visually inspect air supply and piping	A	S	QA
			Witness backflow preventer test.	V	W	W
			Test high-low pressure air switch operation	V	—	W
			Inspect/Test deluge or dry valve riser assembly (including control valves, alarm switch & tamper switches), and functional operation	A	S	W
			Inspect/test detection and releasing system	See Fire Alarm System		

KEY = A - Approve, R - Review, W - Witness, RA - Receipt Acknowledge, S - Surveillance Review, V- Verification and Testing, C - Copy, QA - Quality Assurance

FIRE PROTECTION ENGINEERING ROLES and RESPONSIBILITIES

System	Sub-Systems	Phase	Elements	FP QC / DOR (Ktr)	FEAD (SIOH)	FEC (PCAS)
Water Distribution	**Fire hydrants, distribution piping, & control valves**	Final Test	Process system submittal (Qualifications of Installer, Shop Drawings, Data Sheets & Calcs)	A	C	—
			Preliminary Test Reports & Certifications	—	RA	S
			Visually inspect all thrust blocks.	A	QA	—
			Witness hydrostatic test.	A	C	—
			Witness flush testing of hydrant	A	C	QA
			Operate all control/isolation valves (each)	V	S	QA
			Operate fire hydrants and check for proper drainage (each)	V	S	QA
	Water storage	Construction	Preliminary Test Reports & Certifications	—	RA	S
			Verify suction piping w/in tank is installed in accordance with design	A	C	S
Pumps for Fire Protection (Water & Foam)	**Pumps & Controllers**		Process system submittal (Qualifications of Installer, Shop Drawings, Data Sheets & Calcs)	A	C	S
			Preliminary Test Reports & Certifications	—	RA	S
		Test Preparation	Visually inspect system for adherence to plan, completeness, and adequacy of installation.	A	QA	QA
		Test Preparation	Witness pump controller functional tests (including automatic transfer switch operation & battery transfer as applicable).	A	QA	W
			Witness flow test to generate performance curve (pressure vs discharge, rpms, amps, shaft alignment)	V	QA	W
		Final Test	Witness automatic and manual starts & stops	V	QA	W
			Verify that controller supervisory signals are received by the fire alarm control panel	V	C	W

KEY = A - Approve, R - Review, W - Witness, RA - Receipt Acknowledge, S - Surveillance Review, V- Verification and Testing, C - Copy, QA - Quality Assurance

FIRE PROTECTION ENGINEERING ROLES and RESPONSIBILITIES

System	Sub-Systems	Phase	Elements	FP QC / DOR (Ktr)	FEAD (SIOH)	FEC (PCAS)
Fire Alarm Systems	**Evacuation / Notification Detection & Releasing Systems.**	Test Preparation & Final Test	Process system submittal (Qualifications of Installer, Shop Drawings, Data Sheets & Calcs)	A	C	S
			Preliminary Test Reports & Certifications	—	RA	S
			Visually inspect system for adherence to plan, completeness, and adequacy of installation. (30,000 SQ. FT.)	A	QA	QA
			Test initiating devices for proper operation. (Activate 15% of smoke or heat detectors with no failures {30,000 sq. ft)/(625 sq. ft/ detector)(0.15)=7}	A	QA	QA
			Test initiating circuits for shorts, ground faults, and general operation	A	C	QA
			Test signaling circuits for shorts, ground faults, and general operation	A	C	QA
			Verify audible and visual devices operate properly and audible devices can be heard throughout the facility	A	C	QA
			Test peripheral devices (door hold opens, etc)	A	C	QA
			Witness functional test of the main control panel	V	C	W
			Test interface with other systems (i.e., preaction, gaseous, etc.)	V	C	W
			Test that correct signals are being sent to the base receiving station	V	C	W
			Test recall for elevators - See "Others - Elevators" {Bldg 2 stories or more}	V	S	W
			Test AHU shut down - See "Others - HVAC"	V	S	W
			Test power shut down - See "Others - {Elevators} Electrical"	V	C	W
	Control Panels used for Releasing Service		Process system submittal (Qualifications of Installer, Shop Drawings, Data Sheets & Calcs)	A	C	S
			Preliminary Test Reports & Certifications	—	RA	S
			Test releasing circuits for shorts, ground faults, and general operation	V	C	W
			Test power shut down - See "Others - Electrical"	V	S	QA
			Test automatic closing of dampers/doors	V	S	W
	Base-Wide Fire Reporting System		Process system submittal (Qualifications of Installer, Shop Drawings, Data Sheets & Calcs)	A	C	S
			Preliminary Test Reports & Certifications	—	RA	S
			Test transmitting devices to ensure the signals are received at the main console **{per bldg}**	V	C	W
			Test the main console for redundancy requirements	V	S	W

KEY = A - Approve, R - Review, W - Witness, RA - Receipt Acknowledge, S - Surveillance Review, V- Verification and Testing, C - Copy, QA - Quality Assurance

FIRE PROTECTION ENGINEERING ROLES and RESPONSIBILITIES

System	Sub-Systems	Phase	Elements	FP QC / DOR (Ktr)	FEAD (SIOH)	FEC (PCAS)
Miscelaneous Extinguishing Systems	**Gaseous Systems**	Final Test	Process system submittal (Qualifications of Installer, Shop Drawings, Data Sheets & Calcs)	A	C	S
			Preliminary Test Reports & Certifications	—	RA	S
			Visually inspect system for adherence to plan, completeness, and adequacy of installation.	A	S	QA
			Verify correct nozzles were installed	A	S	W
			Witness room pressurization test	V	S	W
			Witness full functional test to verify cylinder head functions properly and all control/interface functions operate accordingly.	V	S	W
			Inspect/test detection and releasing system	See Fire Alarm System		
	Wet Chemical & Dry Chemical Systems	Test Prep	Process system submittal (Qualifications of Installer, Shop Drawings, Data Sheets & Calcs)	A	C	S
			Preliminary Test Reports & Certifications	—	RA	S
			Verify piping and nozzles are installed in accordance with manufacturer's listing requirements	A	S	W
			Witness discharge test - ensure nozzles are bagged if discharging water in a wet chemical system	V	S	W
		Final Test	Verify alarm and supervisory signals are sent to the FACP	V	S	W
			Verify power and gas are disconnect when system activates (if applicable)	V	S	W
			Verify exhaust system either continues to run or shuts down depending on listing (if applicable)	V	S	W
	Foam Systems (All types)	Test Preparation	Process system submittal (Qualifications of Installer, Shop Drawings, Data Sheets & Calcs)	A	C	S
			Preliminary Test Reports & Certifications	—	RA	S
			Review test plan	—	C	QA
			Review the contractor's test plan for environmental and other compliance	—	S	QA
			Inspect/test detection and releasing system	See Fire Alarm System		
			Visually inspect system for adherence to plan, completeness, and adequacy of installation. Conduct functional test of entire system. Submit report.	A	QA	QA
			Verify correct foam generators / discharge devices are installed and properly piped	A	—	QA
			Verify correct size pipe and installed properly	A	—	QA
			Verify riser assembly (deluge valve) is installed properly	A	—	QA
		Final Test	Verify strainer has proper mesh	V	QA	W
		Final Test	Conduct performance test to ensure proper setting and operation of foam control valves and discharge devices. *(multiply by the number of risers)*	V	QA	W
			Conduct functional test of each generator, ratio controller, or proportioner. *(multiply by the number of risers)*	—	QA	W

KEY = A - Approve, R - Review, W - Witness, RA - Receipt Acknowledge, S - Surveillance Review, V- Verification and Testing, C - Copy, QA - Quality Assurance

FIRE PROTECTION ENGINEERING ROLES and RESPONSIBILITIES

System	Sub-Systems	Phase	Elements	FP QC / DOR (Ktr)	FEAD (SIOH)	FEC (PCAS)
Passive	**Fire / Smoke Barriers IBC Inspections (Section 109)**	Preliminary and Final Inspections	Process system submittal (Qualifications of Installer, Shop Drawings, Data Sheets & Calcs)	A	C	S
			Preliminary Test Reports & Certifications	—	RA	S
			Inspect Lath & gypsum board installation	A	QA	QA
			Inspect fire-rated / smoke wall and/or floor penetrations	A	S	QA
			Inspect wall/ceiling/roof joint	A	S	QA
			Inspect/test fire & smoke damper installation and performance	A	S	QA
			Inspect fire doors and frames	A	QA	QA
Life Safety Features	**Exit Signs and Emergency Lighting**	Preliminary	Verify installed locations of exit signs.	A	S	QA
			Verify installed locations of emergency lighting	A	S	QA
		Final Test	Check performance of emergency lighting systems and battery back-up.	A	S	QA
	Emergency Generators		Check to ensure all life safety features on the emergency generator are provide with power in the required amount of time	A	S	QA
Other Systems	**Elevators**	Test	Verify elevator re-call to primary floor	A	S	QA
			Verify elevator re-call to alternate floor	A	S	QA
			Test power disconnect upon water flow	V	S	QA
			Verify signal in elevator cab activates	V	S	QA
	Smoke Control / Exhaust Systems	Preliminary Test	Verify smoke exhaust / smoke control system activates via appropriate initiating devices (IBC §1704)	A	S	QA
			Verify location of duct detectors and for proper installation	A	S	QA
		Final Test	Perform operational test to show smoke exhaust / smoke control system functions as designed	V	S	QA
			Special Inspections for smoke control (IBC §1704) (See NFPA 92A & 92B, Chap. 8.)	A	W	W
			Perform operational test to verify detector functions properly and shuts down the correct AHU	V	S	QA
	Electrical	Pre-Test	Verify each detector associated with the electrical equipment disconnects power	A	S	QA
		Final Test	Test power disconnect for associated electronic equipment	V	S	QA

KEY = A - Approve, R - Review, W - Witness, RA - Receipt Acknowledge, S - Surveillance Review, V- Verification and Testing, C - Copy, QA - Quality Assurance

MECHANICAL ENGINEERING ROLES and RESPONSIBILITIES

System	Sub-Systems	Phase	Elements	ME QC / DOR (Ktr)	FEAD (SIOH)	FEC (PCAS)
Energy Supply Systems	**Fuel Oil - ALL**	Field Visit	**Complete System -** Verify contractor provided complete fuel oil system to the facility, including applications and permits	A	QA	—
			Piping - Verify fuel oil piping meets requirements of International Mechanical Code.	A	QA	—
			Testing - Verify oil system testing meets requirements of NFPA 31.	V	W	—
	Fuel Oil - Exterior	Submittal Process	**Piping -** Verify fuel piping is either ASTM A 53 Type E (electric-resistance welded, Grade A or B) black steel; or ASTM A 53 Type S (seamless, Grade A or B) black steel; or API SPEC 5L, seamless, submerged-arc weld or gas metal-arc weld, Grade B, black ste	A	RA	—
			Fuel Pumps - Verify fuel pumps comply with NEMA MG 1, NFPA 70, and are designed for use with hydrocarbon fuels.	A	RA	—
			Fuel Pumps - Verify fuel pumps have a working pressure of 1896 kilopascals (275 psig) at 38 degrees C (100 degrees F).	A	RA	—
			Fuel Meters - Verify fuel meters are continuous duty, positive displacement type, with electronic thermal compensation capability, suitable for outdoor installation.	A	RA	—
			Fuel Meters - Verify fuel meters are designed for use with hydrocarbon fuels and have a working pressure of 1896 kilopascals (275 psig) at 38 degrees C (100 degrees F).	A	RA	—
		Submittal Process/ Field Visit	**Storage Tanks -** Verify aboveground liquid fuel storage tanks are concrete encased or double wall in accordance with UL 142 and UL 2085 with secondary containment and leak monitoring of a capacity to meet the system requirements. Verify overfill/spill con	A	RA/ QA	S
			Dispensing Tanks - Verify Liquid fuel dispensing tanks are concrete encased or double wall in accordance with UL 142 and UL 2085 with secondary containment and leak monitoring of a capacity to meet the system requirements. Verify overfill/spill containme	A	RA/ QA	S
	Fuel Oil - Interior	Submittal Process	**Pumps -** Verify pumps that are not part of the burner assembly are positive dispacement type	A	RA	—
		Field Visit	**Oil Filter -** Verify an oil filter is provided prior to oil entering appliance or pump.	A	QA	QA
		Field Visit	**Drip Legs -** Verify drip legs are provided and properly installed prior to oil entering appliance or pump.	A	QA	—
		Submittal Process	**Storage Tanks -** Verify all storage tanks meet NFPA 31 requirements.	A	RA	—
	Natural Gas - ALL	Field Visit	**Complete System -** Verify contractor provided complete natural gas system to the facility, including applications and permits	A	QA	—
		Field Visit	**Testing -** Verify system was tested at 1.5 times maximum working pressure, but not less than 350 kPa (50 PSI) per NFPA 54	V	W	—

KEY = A - Approve, R - Review, W - Witness, RA - Receipt Acknowledge, S - Surveilance Review, V- Verification and Testing, C - Copy, QA - Quality Assurance

MECHANICAL ENGINEERING ROLES and RESPONSIBILITIES

System	Sub-Systems	Phase	Elements	ME QC / DOR (Ktr)	FEAD (SIOH)	FEC (PCAS)
Energy Supply Systems (continued)	**Natural Gas - Exterior (Contractor installed piping)**	Field Visit	**Piping -** Verify exterior gas piping meets requirements of local natural gas utility	A	QA	—
		Submittal Process	**Piping -** Verify piping meets requirements of ASME B31.8, Gas Transmission and Distribution Piping Systems	A	RA	—
		Submittal Process	**Piping -** Verify the natural gas piping is either ASTM A 53, Type E (electric-resistance welded, Grade A or B) black steel piping or ASTM A 53 Type S (seamless, Grade A or B) black steel piping or ASTM D 2513, Grade PE2406 or PE3408 polyethylene piping an	A	RA	—
		Field Visit	**Meter and Pressure Regulator -** Verify meter and pressure regulator are provided in accordance with local utility requirements.	A	QA	—
		Field Visit	**Piping Identification -** Verify polyethylene plastic tape manufactured specifically for warning and identifying buried utility lines are provided for non-metallic undergound piping systems	A	QA	—
	Natural Gas - Interior	Submittal Process	**Piping -** Verify interior gas piping meets requirements of NFPA 54, National Fuel Gas Code	A	RA	—
	Propane - ALL	Field Visit	**Complete System -** Verify contractor provided complete propane system to the facility, including appropriate applications and permits.	A	QA	—
	Propane - Exterior	Submittal Process	**Piping -** If piping is not provided by propane supplier, verify the propane piping is either ASTM A 53, Type E (electric-resistance welded, Grade A or B) black steel piping or ASTM A 53 Type S (seamless, Grade A or B) black steel piping or ASTM D 2513, Gr	A	RA	—
		Submittal Process	**Fittings -** Confirm Polyethylene fittings meet ASTM D 2683 for socket fittings or ASTM D 2513 for molded butt-fusion fittings	A	RA	—
		Field Visit	**Tank -** Verify propane tank capacity conforms to tank capacity submitted in shop drawings.	A	QA	—
		Submittal Process	**Tank -** If tank is not provided by propane supplier, verify propane tank material and installation comply with NFPA 58.	A	RA	—
		Submittal Process	**Tank -** If tank is not provided by propane supplier, verify propane tank is ASME labeled.	A	QA	—
		Field Visit	**Piping Identiication -** Verify polyethylene plastic tape manufactured specifically for warning and identifying buried utility lines are provided for non-metallic undergound piping systems	A	QA	—

KEY = A - Approve, R - Review, W - Witness, RA - Receipt Acknowledge, S - Surveilance Review, V- Verification and Testing, C - Copy, QA - Quality Assurance

MECHANICAL ENGINEERING ROLES and RESPONSIBILITIES

System	Sub-Systems	Phase	Elements	ME QC / DOR (Ktr)	FEAD (SIOH)	FEC (PCAS)
Energy Supply Systems (continued)	**Propane - Interior**	Field Visit	Verify the propane installation meets the requirements specified in NFPA 58.	A	QA	—
		Submittal Process	**Piping -** Verify standard pipe dimension ratio is not more than 11.5	A	RA	—
	Steam - Exterior Underground	Submittal Process	Confirm the submission of a Certificate of Satisfactory Operation certifying that at least 3 systems installed by the piping system manufacturer within the previous 10 years have and are operating satisfactorily for not less than 5 years.	A	RA	S
		Submittal Process	Confirm the submission of a written certification by the piping system manufacturer that the distribution system installer is technically qualified and experienced in the installation of the system.	A	RA	S
		Submittal Process/ Field Visit	Verify underground steam and condensate piping in separate conduits is direct buried, factory pre-fabricated, pre-insulated, and consist of a steel service pipe with polyurethane insulation and a high-density polyethylene (HDPE) jacket.	A	RA/ QA	—
		Submittal Process/ Field Visit	Confirm piping system fittings and components are factory fabricated and no field insulated fittings are provided.	A	RA/ QA	—
		Field Visit	Verify asbestos cement or plastic conduit piping is not provided.	A	QA	—
		Field Visit	**Piping Insulation -** Verify the piping system insulation thickness is in accordance with contract requirements.	A	QA	—
		Submittal Process	**Isolation Valves -** Verify ASME class 150 isolation valves are provided in manholes for system supply and return lines at take-offs for service to each building .	A	QA	—
		Submittal Process/ Field Visit	**Expansion Loops -** Verify expansion loops are utilized to compensate for piping expansion.	A	RA/ QA	S
		Submittal Process/ Field Visit	**Expansion Anchors -** Verify piping expansion anchors are located outside manholes.	A	RA/ QA	—
		Field Visit	**Manholes -** Verify system manholes are constructed of reinforced, 206.8 bar (3000 psi) concrete. Verify manhole floor and sides are watertight and were made in one monolithic pour. Verify manhole top extends a minimum of 300 mm (6 inches) above grade. V	A	QA	—
		Submittal Process	Verify a sump pit and a vertical sump pump designed for an operating temperature design of 93 degrees C (195 degrees F) minimum are provided in each system manhole.	A	RA	—
		Submittal Process	**Sump Pump - Float Control -** Verify a 2-pole float control is provided for each manhole sump pump.	A	RA	—
		Submittal Process/ Field Visit	**Valves -** For system valves located outside of manholes, verify a cast-iron or ductile-iron valve box and cover of a suitable size are provided. Verify the box cover has the word(s) describing the utility cast on the cover.	A	RA/ QA	—

KEY = A - Approve, R - Review, W - Witness, RA - Receipt Acknowledge, S - Surveilance Review, V- Verification and Testing, C - Copy, QA - Quality Assurance

MECHANICAL ENGINEERING ROLES and RESPONSIBILITIES

System	Sub-Systems	Phase	Elements	ME QC / DOR (Ktr)	FEAD (SIOH)	FEC (PCAS)
Energy Supply Systems (continued)	**Steam - Exterior Aboveground**	Submittal Process	**Piping -** Verify steam piping is either ASTM A 53 Type E (electric-resistance welded, Grade A or B) black steel pipe or ASTM A 53 Type S (seamless, Grade A or B) black steel pipe or, for pipe sizes through 250 mm (9 inches), ASTM A 106 (Grade A or B) black	A	RA	—
		Submittal Process	**Piping -** Verify condensate piping is either ASTM A 53 Type E (electric-resistance welded, Grade A or B) black steel, Weight Class XS (Extra Strong); or ASTM A 53 Type S (seamless, Grade A or B) black steel, Weight Class XS (Extra Strong); or ASTM A 106, G	A	RA	—
		Field Visit	**Piping Insulation -** Verify piping insulation is either fibrous glass, calcium silicate, or cellular glass as indicated in submitted shop drawings. Verify pipe insulation matches existing or surrounding insulation if applicable.	A	QA	—
		Field Visit	**Piping Insulation -** Verify the piping system insulation thickness is in accordance with contract requirements.	A	QA	—
		Field Visit	**Insulation -** Verify insulation is covered with an with aluminum jacket painted to conform with the Base Architectural Plan.	A	QA	—
		Submittal Process/ Field Visit	Verify the use of either MSS SP-58 or MSS SP-69 adjustable supports with insulation protection saddles. Verify roller supports utilize stainless steel axles.	A	RA/ QA	—
		Field Visit	**Support Poles -** Verify support poles are installed with guy wires and necessary hardware.	A	QA	—
		Submittal Process/ Field Visit	**Pipe Expansion -** Verify pipe expansion is compensated by utilizing either expansion loops, guided sliexpansion joints, or flexible ball type expansion joints.	A	RA/ QA	S
	Steam - Interior	Submittal Process	**Steam piping** - Verify is ASTM A106 or A53, Grade B, Schedule 40, black steel, electric-resistance welded or seamless	A	RA	—
		Submittal Process/ Field Visit	**Steam piping** - Verify insulated with mineral fiber or cellular glass insulation with all-purpose jacket	A	RA/ QA	—
		Submittal Process	**Condensate return piping** - Verify is ASTM A106 or ASTM A53, Grade B, Schedule 80, black steel, electric-resistance welded or seamless	A	RA	—
		Submittal Process/ Field Visit	**Condensate return piping** - Verify insulated with mineral fiber or cellular glass insulation with all-purpose jacket	A	RA/ QA	—
		Submittal Process	**Steel pipe fittings** - For piping 50 mm (2 inch) and smaller, verify is ANSI/ASME B16.3 malleable iron screwed fittings or ASME B16.11 socket welding (Class 3000) or ASME B16.11 threaded type (Class 2000)	A	RA	—
		Submittal Process	**Steel pipe fittings** - For piping 63 mm (2-1/2 inch) and larger, verify is ANSI/ASME B16.9 butt-welding fittings or ANSI/ASME B16.5 flanged type	A	RA	—
		Field Visit	**Steam pressure reducing station -** Verify provided for each building	A	QA	—

KEY = A - Approve, R - Review, W - Witness, RA - Receipt Acknowledge, S - Surveilance Review, V- Verification and Testing, C - Copy, QA - Quality Assurance

MECHANICAL ENGINEERING ROLES and RESPONSIBILITIES

System	Sub-Systems	Phase	Elements	ME QC / DOR (Ktr)	FEAD (SIOH)	FEC (PCAS)
nergy Supply Systems (continued)		Submittal Process/ Field Visit	**Steam traps** - Verify steam traps and accessories are in accordance with UFC 3-400-10N	A	RA/ QA	—
		Field Visit	Verify all valves, traps, and PRV's are accessible for service & maintenance	A	QA	—
	Hot Water - Exterior Underground	Submittal Process/ Field Visit	**Piping -** Verify underground hot water supply & return piping in separate conduits is direct buried, factory pre-fabricated, pre-insulated, and consist of a steel service pipe with polyurethane insulation and a high-density polyethylene (HDPE) jacket.	A	RA/ QA	—
		Submittal Process/ Field Visit	Confirm piping system fittings and components are factory fabricated and no field insulated fittings are provided.	A	RA/ QA	—
		Field Visit	Verify asbestos cement or plastic conduit piping is not provided.	A	QA	—
		Submittal Process	The UHDS representative shall be certified in writing by the UHDS manufacturer to be technically qualified and experienced in the installation of the system. Provide a Certificate of Satisfactory Operation certifying that at least 3 systems installed by	A	QA	S
		Field Visit	**Piping Insulation -** Verify the piping system insulation thickness is in accordance with contract requirements.	A	QA	—
		Submittal Process/ Field Visit	**Isolation Valves -** Verify ASME class 150 isolation valves are provided in manholes for system supply and return lines at take-offs for service to each building .	A	RA/ QA	—
		Submittal Process/ Field Visit	**Expansion Loops -** Verify expansion loops are utilized to compensate for piping expansion.	A	RA/ QA	S
		Submittal Process/ Field Visit	**Manholes -** Verify system manholes are constructed of reinforced, 206.8 bar (3000 psi) concrete. Verify manhole floor and sides are watertight and were made in one monolithic pour. Verify manhole top extends a minimum of 300 mm (6 inches) above grade. V	A	RA/ QA	—
		Submittal Process	Verify a sump pit and a vertical sump pump designed for an operating temperature design of 93 degrees C (195 degrees F) minimum are provided in each system manhole.	A	RA	—
		Submittal Process	**Sump Pump - Float Control -** Verify a 2-pole float control is provided for each manhole sump pump.	A	RA	—
		Submittal Process/ Field Visit	**Valves -** For system valves located outside of manholes, verify a cast-iron or ductile-iron valve box and cover of a suitable size are provided. Verify the box cover has the word(s) describing the utility cast on the cover.	A	RA/ QA	—

KEY = A - Approve, R - Review, W - Witness, RA - Receipt Acknowledge, S - Surveilance Review, V- Verification and Testing, C - Copy, QA - Quality Assurance

MECHANICAL ENGINEERING ROLES and RESPONSIBILITIES

System	Sub-Systems	Phase	Elements	ME QC / DOR (Ktr)	FEAD (SIOH)	FEC (PCAS)
En	**Hot Water - Exterior Aboveground**	Submittal Process	**Piping -** Verify hot water piping is either ASTM A 53 Type E (electric-resistance welded, Grade A or B) black steel, Weight Class XS (Extra Strong); or ASTM A 53 Type S (seamless, Grade A or B) black steel, Weight Class XS (Extra Strong); or ASTM A 106, Gr	A	RA	—
		Field Visit	**Piping Insulation -** Verify piping insulation is either fibrous glass, calcium silicate, or cellular glass as indicated in submitted shop drawings.	A	QA	—
		Field Visit	**Piping Insulation -** Verify the piping system insulation thickness is in accordance with contract requirements.	A	QA	—
		Field Visit	**Insulation -** Verify insulation is covered with an with aluminum jacket painted to conform with the Base Architectural Plan.	A	QA	—
		Submittal Process/ Field Visit	**Pipe Expansion -** Verify pipe expansion is compensated by utilizing either expansion loops, guided slip expansion joints, or flexible ball type expansion joints.	A	RA/ QA	S
		Submittal Process/ Field Visit	Verify the use of either MSS SP-58 or MSS SP-69 adjustable supports with insulation protection saddles. Verify roller supports utilize stainless steel axles.	A	RA/ QA	—
		Field Visit	**Support Poles -** Verify support poles are installed with guy wires and necessary hardware.	A	QA	—
	Hot Water - Interior	Submittal Process	**Piping -** Verify hot water piping is electric resistance, welded or seamless, schedule 40, black steel pipe conforming to ASTM A53. Piping 100mm (4 inch) and smaller may be ASTM B 88 Type K or L copper.	A	RA	—
		Submittal Process	**Steel fittings - For piping 50mm (2 inch) and smaller**, verify provided ANSI/ASME B16.3 malleable iron screwed fittings **OR** ASME B16.11 socket welding (Class 3000) fittings OR ASME B16.11 threaded type (Class 2000)	A	RA	—
		Submittal Process	**Steel fittings - For piping 63 mm (2-1/2 inch) and larger**, verify provided ANSI/ASME B16.9 butt-welding fittings **OR** ANSI/ASME B16.5 flanged type	A	RA	—
		Submittal Process	**Copper fittings -** Verify ANSI B16.18 cast bronze solder joint type or ASME/ANSI B16.22 wrought copper solder joint type	A	RA	—

KEY = A - Approve, R - Review, W - Witness, RA - Receipt Acknowledge, S - Surveilance Review, V- Verification and Testing, C - Copy, QA - Quality Assurance

MECHANICAL ENGINEERING ROLES and RESPONSIBILITIES

System	Sub-Systems	Phase	Elements	ME QC / DOR (Ktr)	FEAD (SIOH)	FEC (PCAS)
Energy Supply Systems (continued)		Submittal Process/ Field Visit	**Insulation -** Verify hot water piping insulated with mineral fiber insulation with factory-applied all-purpose jacket	A	RA/ QA	—
		Field Visit	**Isolation valves** - Verify equipment provided with isolation valves for service and repairs	A	QA	—
		Submittal Process/ Field Visit	**Valves -** Verify appropriately sized	A	RA/ QA	—
		Submittal Process/ Field Visit	**Balancing valves -** Verify provided and appropriately sized to balance water flow	A	RA/ QA	QA
		Field Visit	**Appurtenances -** Verify provided (such as air separators, expansion tanks, suction diffusers, strainers, etc)	A	QA	—
		Field Visit	**Test ports -** Verify provided in piping at inlet and outlet of all major system components including boilers, pumps, etc)	A	QA	QA
		Field Visit	Verify all valves and test ports are accessible for service and maintenance	A	QA	—
	Chilled Water & Condenser Water - Exterior Underground	Submittal Process	Verify system provided is direct buried, factory-prefabricated, pre-insulated, chilled water piping systems. Verify all fittings and accessories are designed and factory-fabricated to prevent moisture from entering into the system by manufacturer.	A	RA	S
		Field Visit	Verify backfill and overall installation meets the requirements of the piping system manufacturer.	A	QA	—
		Field Visit	**Isolation Valves -** Verify supply and return line isolation valves are provided at take-offs for service to each building in valve boxes.	A	QA	—
		Submittal Process/ Field Visit	Verify expansion loops are provided to compensate for piping expansion. Verify anchors are provided outside manholes.	A	RA/ QA	S
	Chilled Water & Condenser Water - Exterior Aboveground	Submittal Process	**Piping -** Verify chilled and condenser water piping are either electric resistance welded or seamless Schedule 40 black steel pipe conforming to ASTM A 53 or, for piping 100 mm (4 inch) and smaller, ASTM B 88 Type K or L copper.	A	RA	—
		Submittal Process	If steel piping is used, verify for piping 50 mm (2 inch) and smaller, ANSI/ASME B16.3 malleable iron screwed fittings or ASME B16.11 socket welding (Class 3000) or threaded type (Class 2000) fittings are provided. For piping 63 mm (2-1/2 inch) and large	A	RA	—
		Submittal Process	If copper piping is used, verify ANSI B16.18 cast bronze solder joint fittings or ASME/ANSI B16.22 wrought copper solder joint fittings are provided.	A	RA	—
		Submittal Process/ Field Visit	**Piping Insulation -** Verify piping insulation is either Mineral fiber, Urethane, cellular glass, Faced Phenolic Foam, or Flexible Cellular pipe insulation as indicated in submitted shop drawings.	A	RA/ QA	—

KEY = A - Approve, R - Review, W - Witness, RA - Receipt Acknowledge, S - Surveilance Review, V- Verification and Testing, C - Copy, QA - Quality Assurance

MECHANICAL ENGINEERING ROLES and RESPONSIBILITIES

System	Sub-Systems	Phase	Elements	ME QC / DOR (Ktr)	FEAD (SIOH)	FEC (PCAS)
Energy Supply Systems (continued)		Field Visit	**Piping Insulation -** Verify the piping system insulation thickness is in accordance with contract requirements.	A	QA	—
		Field Visit	**Piping Insulation -** Verify piping insulation is covered with an aluminum jacket.	A	QA	—
		Submittal Process/ Field Visit	Verify the use of either MSS SP-58 or MSS SP-69 adjustable supports with insulation protection saddles. Verify roller supports utilize stainless steel axles.	A	RA/ QA	—
		Field Visit	**Support Poles -** Verify support poles are installed with guy wires and necessary hardware.	A	QA	—
		Submittal Process/ Field Visit	**Pipe Expansion -** Verify pipe expansion is compensated by utilizing either expansion loops, guided slip expansion joints, or flexible ball type expansion joints.	A	RA/ QA	S
	Chilled Water & Condenser Water - Interior	Submittal Process	**Aboveground chilled & condenser water piping -** Verify aboveground chilled water piping is electric resistance welded or seamless schedule 40 black steel pipe conforming to ASTM A 53. Piping 100mm (4 inch) and smaller may be ASTM B 88 Type K or L copper.	A	RA	—
		Submittal Process	**Steel pipe fittings - For piping 50mm (2 inch) and smaller -** Verify provided ANSI/ASME B16.3 malleable iron screwed fittings or ASME B16.11 socket welding (Class 3000) or threaded type (Class 2000).	A	RA	—
		Submittal Process	**Steel pipe fittings - For piping 63mm (2-1/2 inch) and larger -** Verify provided ASME/ANSI B16.9 butt-welding fittings or ASME/ANSI B16.5 flanged type.	A	RA	—
		Submittal Process	**Steel pipe fittings -** Grooved joint pipe coupling systems of appropriate pressure rating are acceptable in lieu of welded or screwed fittings	A	RA	—
		Submittal Process	**Copper fittings -** Verify provided ANSI B16.18 cast bronze solder joint type or ASME/ANSI B16.22 wrought copper solder joint type	A	RA	—
		Field Visit	**Isolation valves -** Verify isolation valves provided on supply and return lines at take-offs for service to each building	A	QA	—
		Field Visit	**Isolation valves -** Verify isolation valves located in valve boxes	A	QA	—
		Submittal Process/ Field Visit	**Insulation -** Verify above-ground chilled water piping insulated with cellular glass insulation. Flexible unicellular insulation may be used on small piping runouts.	A	RA/ QA	—
		Submittal Process/ Field Visit	**Insulation -** Verify above-ground condenser water piping insulated with mineral fiber insulation	A	RA/ QA	—
		Submittal Process/ Field Visit	**Insulation -** Verify all-purpose jacket with vapor retarder provided for above-ground chilled water and condenser piping	A	RA/ QA	—
		Submittal Process/ Field Visit	**Valves -** Verify appropriately sized	A	RA/ QA	—

KEY = A - Approve, R - Review, W - Witness, RA - Receipt Acknowledge, S - Surveilance Review, V- Verification and Testing, C - Copy, QA - Quality Assurance

MECHANICAL ENGINEERING ROLES and RESPONSIBILITIES

System	Sub-Systems	Phase	Elements	ME QC / DOR (Ktr)	FEAD (SIOH)	FEC (PCAS)
Energy Supply Systems (conti		Submittal Process/ Field Visit	**Balancing valves -** Verify provided and appropriately sized to balance water flow	A	RA/ QA	QA
		Submittal Process/ Field Visit	**Relief valves -** Verify provided and appropriately sized	A	RA/ QA	—
		Field Visit	**Test ports -** Verify test ports provided inpiping at inlet and outlet of all major system components including chillers, pumps, etc	A	QA	QA
		Field Visit	Verify all valves and test ports are accessible for service and maintenance	A	QA	—
	AHU's - ALL	Field Visit	**DDC Sensors -** Confirm location of DDC sensors (temp, SP, Freeze, High pressure SP, AFM), if required	A	QA	QA
		Field Visit	**Smoke Detectors -** Confirm location of smoke detectors (if over 2000 cfm)	A	QA	QA
		Field Visit	**Testing - Filters -** Confirm filters are clean prior to testing	A	QA	QA
		Field Visit	**Filters -** Confirm filters are installed	—	—	—
		Field Visit	**Belts -** Confirm belt tightness and alignment	A	QA	QA
		Field Visit	**Coils -** Confirm all coils are clean	A	QA	QA
		Field Visit	**Vibration Isolators -** Confirm vibration isolators installed according to contract docs and unit secured	A	QA	QA
		Field Visit	**Damper -** Confirm damper operation and assembly tightness	A	QA	QA
		Field Visit	**Motor -** Confirm motor size (HP), voltage, amperage, and rpm	A	QA	QA
		Submittal Process	**Fans -** Verify provided have AMCA 210 certified fans with AMCA seal	A	QA	—
		Field Visit	**Fans -** Confirm fan rpm and rotation direction	A	QA	QA
		Field Visit	**OA Intake Plenum -** Confirm OA intake plenum configuration provides for drainage	A	QA	QA
		Field Visit	**AFM -** Confirm air flow monitoring station location in conformance with manufacturer requirements	A	QA	QA
		Field Visit	**Size -** Confirm unit matches schedule req	A	QA	QA
		Submittal Process/ Field Visit	**Fan bearings -** Verify fan bearings were greased (if req) and have min average life of 200,000 hours at design operating conditions	A	RA/ QA	—
		Field Visit	**Birdscreens -** Verify birdscreens provided for outdoor inlets and outlets	A	QA	QA
		Field Visit	Verify all filter and access doors are accessible for service and maintenance	A	QA	—
		Field Visit	Verify provided are modular construction, double wall AHU's with min of 25mm (1 inch) casing insulation	A	QA	—
		Submittal Process	Verify provided have ARI 430 certified fans and ARI certified coils	A	RA	—

KEY = A - Approve, R - Review, W - Witness, RA - Receipt Acknowledge, S - Surveilance Review, V- Verification and Testing, C - Copy, QA - Quality Assurance

MECHANICAL ENGINEERING ROLES and RESPONSIBILITIES

System	Sub-Systems	Phase	Elements	ME QC / DOR (Ktr)	FEAD (SIOH)	FEC (PCAS)
Equipment & Components (continued)		Submittal Process/ Field Visit	**Drain pan -** Verify provided has stainless steel, positive draining condensate drain pan	A	RA/ QA	—
		Submittal Process	**For 100% OA units -** Verify capability provided for cooling, heating, dehumidification, and reheat	A	RA	—
		Submittal Process/ Field Visit	**Ultraviolet disinfection system -** Verify central station ahu's provided with an ultraviolet c-band (UVC) disinfection system for mold, bacteria, and odor control in each air handler that has a chilled water or DX cooling coil	A	RA/ QA	—
		Submittal Process/ Field Visit	**Ultraviolet disinfection system -** Verify irradiation emitters and fixtures installed in sufficient quantity and in such an arrangement so as to provide an equal distribution of UVC energy on the coil and in the drain pan	A	RA/ QA	—
		Submittal Process/ Field Visit	**Ultraviolet disinfection system -** Verify the UVC energy produced has the lowest possible reflected and shadowed losses (To maintain energy efficiency)	A	RA/ QA	—
		Submittal Process/ Field Visit	**Ultraviolet disinfection system -** For energy efficiency, verify power supplies are of the high efficiency electronic type and matched to the emitter	A	RA/ QA	—
		Submittal Process/ Field Visit	**Ultraviolet disinfection system -** For intensity, verify the minimal UVC energy striking the leading edge (if nstalled upstream) or trailing edge (if installed downstream) of all the coil fins is not less than 820 uW/cm2 at the closest point and through pl	A	RA/ QA	—
		Submittal Process/ Field Visit	**Ultraviolet disinfection system -** Verify equal amounts strike the drain pan, either directly or indirectly through reflection	A	RA/ QA	—
		Submittal Process/ Field Visit	**Ultraviolet disinfection system -** For installation, verify emitters and fixtures are installed at right angles to the conforming lines of the coil fins, such that through incident angle reflection, UVC energy bathes all surfaces of the coil and drain pan	A	RA/ QA	—
		Submittal Process/ Field Visit	**Ultraviolet disinfection system -** Verify one complete set of spare bulbs supplied	A	RA/ QA	—
	AHU's - Split System	Submittal Process	Verify provided is factory assembled, packaged AHU rated in accordance with ARI 210/240 or ARI 340/360	A	RA	—
		Field Visit	Verify matching components provided are from the same manufacturer	A	QA	—
	AHU's - Rooftop	Submittal Process/ Field Visit	Verify provided is factory packaged unit in accordance with ARI 430 and suitable for outdoor installation	A	RA/ QA	—
		Field Visit	**Roof Curb -** Verify provided with manufacturer's roof curb	A	QA	—

KEY = A - Approve, R - Review, W - Witness, RA - Receipt Acknowledge, S - Surveilance Review, V- Verification and Testing, C - Copy, QA - Quality Assurance

MECHANICAL ENGINEERING ROLES and RESPONSIBILITIES

System	Sub-Systems	Phase	Elements	ME QC / DOR (Ktr)	FEAD (SIOH)	FEC (PCAS)
nent & Components (continued)	**Roof Curbs**	Field Visit	**Mounting Surface -** Confirm fan or unit mounting surface is parallel to the horizon, not the roof deck if sloped	A	QA	—
		Field Visit	**Waterproofing -** Confirm curb has been flashed properly and seal to the roofing material (no leaks) (waterproofing)	A	QA	—
		Field Visit	**Lightning Rods -** Confirm lightning rods have been attached to units and run to ground	A	QA	—
		Field Visit	**Insulation -** Confirm roof curb is insulated	A	QA	—
		Field Visit	**Size -** Confirm curb is the same size or smaller as the unit being placed on it (tight fit)	A	QA	—
	Fans - ALL	Submittal Process/ Field Visit	Verify fans are AMCA 210 certified with AMCA seal	A	RA/ QA	—
		Submittal Process	**Fan bearings -** Verify fan bearings have min average life of 200,000 hours at design operating conditions	A	RA	—
		Field Visit	**Rotation -** Confirm rotation and alignment	A	QA	QA
		Field Visit	**Belts -** Confirm belt tightness (if provided)	A	QA	QA
		Field Visit	**Motor -** Confirm HP, voltage, amperage	A	QA	QA
		Field Visit	**Size -** Confirm size matches schedule req	A	QA	QA
		Field Visit	Verify fans are accessible for service and maintenance	A	QA	
		Field Visit	**Birdscreens -** Verify bird screens provided for outdoor inlets and outlets	A	QA	QA
		Field Visit	**DDC -** Verify fans provided with means for verifying operation via DDC system	A	QA	QA
	Exhaust Fans (Roof)	Field Visit	**Roof Curb -** Confirm lag bolted to roof curb	A	QA	QA
		Field Visit	**Dome Top -** Confirm dome top is secured	A	QA	QA
		Field Visit	**Type -** Verify centrifugal fans provided	A	QA	
	In-line Fans	Field Visit	**Vibration Isolators -** Confirm hangers & isolation devices	A	QA	QA
		Field Visit	**Flex Connection -** Confirm flexible connection to ductwork	A	QA	QA
		Field Visit	**Speed Controller -** Confirm speed controller installation (if provided)	A	QA	QA
		Field Visit	**Access Panel -** Confirm access panel located properly	A	QA	QA
		Field Visit	**Type -** Verify centrifugal fans provided	A	QA	—
	Wall Fans	Field Visit	**Type -** Verify wall fans provided are propeller fans with fan guards	A	QA	—
		Field Visit	**Type -** Verify wall fans provided are centrifugal fans with backdraft dampers and wall bracket	A	QA	—
	Bathroom Fan	Submittal Process/ Field Visit	Verify provided are UL 507 and UL-Listed, Home Ventilating Institute (HVI) certified, and with AMCA seal for ceiling installation	A	RA/ QA	—

KEY = A - Approve, R - Review, W - Witness, RA - Receipt Acknowledge, S - Surveilance Review, V- Verification and Testing, C - Copy, QA - Quality Assurance

MECHANICAL ENGINEERING ROLES and RESPONSIBILITIES

System	Sub-Systems	Phase	Elements	ME QC / DOR (Ktr)	FEAD (SIOH)	FEC (PCAS)
Equipm	**Range Hoods**	Submittal Process/ Field Visit	Verify provided are UL 507 and UL-Listed, with AMCA seal	A	RA/ QA	—
		Submittal Process/ Field Visit	**Light -** Verify provided with light over stove	A	RA/ QA	—
		Submittal Process	Verify min fan capacity is 160 cfm with max sound level of 5.6 sones	A	RA	—
	Louvers & Hoods - ALL	Submittal Process	**Louver rating** - Verify louvers bear AMCA ratings seal for air performance and water penetration in accordance with AMCA 500 and AMCA 511	A	RA	—
		Submittal Process/ Field Visit	**Construction** - Verify hoods and louvers constructed of anodized aluminum alloy or stainless steel	A	RA/ QA	
		Submittal Process/ Field Visit	**Birdscreens** - Verify provided for louvers and hoods	A	RA/ QA	QA
	Intake Hood (Roof)	Submittal Process/ Field Visit	**Type -** Confirm type as specified	A	RA/ QA	QA
		Field Visit	Confirm top is secured	A	QA	QA
		Submittal Process/ Field Visit	**Size -** Confirm size matches schedule req (free area)	A	RA/ QA	QA
	OA Intake Louvers (Wall)	Submittal Process/ Field Visit	**Type -** Confirm type as specified	A	RA/ QA	QA
		Submittal Process/ Field Visit	**Size -** Confirm size matches schedule req (free area)	A	RA/ QA	QA
		Submittal Process/ Field Visit	Confirm waterproof (when req) and velocity when water carry-over occurs	A	RA/ QA	QA
		Field Visit	**Intake Plenum -** Confirm intake plenum is sloped back to louver or drain has been provided	A	QA	QA
		Field Visit	**Damper -** Confirm opposed blade damper with actuator has been provided	A	QA	QA
		Field Visit	**AFM -** Confirm air flow monitoring type louver has been provided, if req	A	QA	QA

KEY = A - Approve, R - Review, W - Witness, RA - Receipt Acknowledge, S - Surveilance Review, V- Verification and Testing, C - Copy, QA - Quality Assurance

MECHANICAL ENGINEERING ROLES and RESPONSIBILITIES

System	Sub-Systems	Phase	Elements	ME QC / DOR (Ktr)	FEAD (SIOH)	FEC (PCAS)
Equipment & Components (continued)	**Ductwork**	Field Visit	**Construction -** Except as specified herein, verify ductwork constructed, braced, reinforced, installed, supported, and sealed per SMACNA standards	A	QA	QA
		Field Visit	Verify all dampers are accessible for service and maintenance	A	QA	—
		Field Visit	Confirm general construction conforms to contract documents	A	QA	QA
		Field Visit	Confirm correct pressure rating of ductwork has been conformed to SMACNA	A	QA	QA
		Field Visit	Confirm ductwork has been sealed in accordance with specified seal class	A	QA	QA
		Field Visit	**VAV inlet -** Confirm minimum straight duct is 6 duct diameters and same size as VAV terminal inlet	A	QA	QA
		Field Visit	Confirm DALT allowables are met	A	QA	QA
		Submittal Process/ Field Visit	**Access Doors -** Confirm access doors have been provided before every elbow with turning vanes	A	RA/ QA	QA
		Submittal Process/ Field Visit	**Access Doors -** Confirm access doors provided at appropriate locations	A	RA/ QA	QA
		Field Visit	**Flexible duct** - Verify insulated flexible duct used only to adapt to minor offsets for connections to air distribution devices	A	QA	QA
		Submittal Process	**Flexible duct** - Verify is UL 181 listed and per SMACNA DCS with minimum R value of 4	A	RA	—
		Field Visit	**Flexible duct** - Verify maximum length is 2 meters (6 feet)	A	QA	QA
		Field Visit	**Flexible Duct -** Confirm, where flexible ductwork is specified, that the length of flex ductwork is provided to the max req length or less and is supported properly with no abrupt turns (ie: as straight as possible)	A	QA	QA
		Field Visit	**Flexible connectors** - Verify provided between fans and ducts	A	QA	QA
		Submittal Process/ Field Visit	**Damper -** Confirm balancing damper at branch take-off's, not at diffuser neck	A	RA/ QA	QA
		Submittal Process/ Field Visit	**Damper -** Confirm balancing damper construction conforms to the specified seal class	A	RA/ QA	QA
		Submittal Process/ Field Visit	**Damper -** Confirm discharge damper installed on VAV terminal discharge, if req	A	RA/ QA	QA
		Field Visit	**Damper -** Confirm control damper type and location along with actuator type	A	QA	QA
		Submittal Process	**Dampers** - Verify conforms to SMACNA DCS	A	RA	—
		Submittal Process	**Fire dampers** - Verify are rated per UL 555	A	RA	—
		Submittal Process	**Fire dampers** - Verify are dynamic type rated for closure against a moving airstream	A	RA	—

KEY = A - Approve, R - Review, W - Witness, RA - Receipt Acknowledge, S - Surveilance Review, V- Verification and Testing, C - Copy, QA - Quality Assurance

MECHANICAL ENGINEERING ROLES and RESPONSIBILITIES

System	Sub-Systems	Phase	Elements	ME QC / DOR (Ktr)	FEAD (SIOH)	FEC (PCAS)
ent & Components (continued)		Submittal Process/ Field Visit	**Fire dampers** - Verify do not intrude into air stream when in open position	A	RA/ QA	—
		Submittal Process	**Smoke dampers** - Verify are rated per UL 555S	A	RA	—
		Submittal Process/ Field Visit	**Elbows** - Confirm correct elbow type (ie: double wall turning vane, 1.5 radius curved, etc)	A	RA/ QA	QA
		Field Visit	**Bracing** - Confirm proper bracing of high pressure ductwork in accordance with SMACNA	A	QA	QA
		Field Visit	**Filters** - Confirm access to filter rack for ease of filter change out in duct mounted assemblies	A	QA	QA
		Submittal Process/ Field Visit	**Insulation** - Confirm ductwork insulated properly (ext batt, hard, int lined, double wall insulated, etc)	A	RA/ QA	QA
		Field Visit	**Insulation** - Inspect vapor barrier of insulation	A	QA	—
		Field Visit	**Hangers** - Confirm proper duct hangers have been utilized in accordance with spec req	A	QA	QA
		Field Visit	**Vibration Isolators** - Confirm the use of vibration isolation material at unit connection to ductwork free of holes (no leakage)	A	QA	QA
		Submittal Process	**Sound attenuators** - Verify fabricated sound attenuators reduces the rated sound pressure level of the fan down to at least 65 decibels in the 250 Hz (third octave band) center frequency by using a reference sound source calibrated in decibels of sound pow	A	RA	—
		Submittal Process/ Field Visit	**Sound attenuators** - Verify pressure drop does not exceed 157 Pa (0.63 inch of water)	A	RA/ QA	QA
	VAV Boxes - ALL	Submittal Process	Verify units are pressure-independent type and rated per ARI 880	A	QA	—
		Field Visit	**Primary air valve** - Verify not allowed to fully shut-off	A	QA	QA
		Field Visit	**Heating coil** - Verify each box provided with heating coil unless not required by space reheat or heating	A	QA	—
		Field Visit	Verify all VAV box control panels are accessible	A	QA	
		Field Visit	**Electronic controls** - Verify are provided	A	QA	QA
	VAV Terminal Box (Fan-Powered)	Submittal Process	**Type** - Verify units are pressure-independent, fan powered, rated per ARI 880, and UL listed	A	QA	—
		Field Visit	**Filters** - Confirm filter installed and clean	A	QA	QA
		Field Visit	Confirm ductwork on primary inlet is installed with 6 straight duct diameters the same size as the inlet	A	QA	QA
		Submittal Process/ Field Visit	**Dampers** - Confirm discharge damper has been provided and/or coordinated with sheet metal contractor	A	QA	QA
		Field Visit	Confirm fan size & primary inlet sized in accordance with contract documents	A	QA	—
		Field Visit	**Primary Air Valve** - Confirm max/min setting of primary air valve	A	QA	QA
		Field Visit	**Primary air valve** - Verify not allowed to fully shut-off	A	QA	QA

KEY = A - Approve, R - Review, W - Witness, RA - Receipt Acknowledge, S - Surveilance Review, V- Verification and Testing, C - Copy, QA - Quality Assurance

MECHANICAL ENGINEERING ROLES and RESPONSIBILITIES

System	Sub-Systems	Phase	Elements	ME QC / DOR (Ktr)	FEAD (SIOH)	FEC (PCAS)
Equipment		Field Visit	**Size** - Confirm size matches schedule req	A	QA	QA
		Field Visit	**Motor** - Confirm HP, voltage, and amperage of fan motor	A	QA	QA
		Field Visit	**Heating coil** - Verify each box provided with heating coil, if required	A	QA	—
		Field Visit	**Reheat Coils** - Confirm reheat coil size, if req	A	QA	—
		Field Visit	**Reheat Coils** - Confirm reheat coil is piped properly	A	QA	QA
		Field Visit	**Sensors** - Confirm discharge temp sensor provided, if req	A	QA	QA
		Field Visit	Confirm hangers have provisions for vibration isolation	A	QA	QA
		Field Visit	**Electronic controls** - Verify provided with speed controller, discharge volume control damper(s), and return/recirculation air frame and filter	A	QA	QA
		Submittal Process	**Insulation** - Verify in accordance with ASHRAE 90.1	A	RA	—
	VAV Terminal Box (Shut Off)	Field Visit	Confirm ductwork on primary inlet is installed with 6 straight duct diameters the same size as the inlet	A	QA	QA
		Field Visit	**Primary Air Valve** - Confirm max and min setting of primary air valve	A	QA	QA
		Field Visit	**Reheat Coils** - Confirm reheat coil size, if req	A	QA	
		Field Visit	**Reheat Coils** - Confirm reheat coil in piping properly	A	QA	QA
		Field Visit	**Sensors** - Confirm discharge temp sensor provided, if req	A	QA	QA
		Field Visit	Confirm hangers have provisions for vibration isolation	A	QA	QA
		Field Visit	**Size** - Confirm box size matches schedule req	A	QA	QA
	DX VAV Units	Submittal Process	**Finish** - If indicated in ESR Section D30, verify anti-corrosion coating provided is immersion applied, baked phenolic, or other approved coating. Field applied coatings not acceptable.	A	QA	—
		Submittal Process/ Field Visit	**Direct expansion equipment** - Verify is specifically designed and manufactured for VAV applications	A	RA/ QA	—
		Submittal Process/ Field Visit	**Equipment** - Verify from the same manufacturer (central air handling units, VAV boxes/ zone dampers, and zone controls)	A	RA/ QA	—
		Field Visit	**Evaporator coils** - Verify airflow through evaporator coils is not modulated	A	QA	—
		Field Visit	**Zone control damper units** - Verify duct mounted zone control damper units provided with integral control box designed for use with DX VAV packaged systems	A	QA	—
		Submittal Process/ Field Visit	**Air diffusers** - Verify self-modulating air diffusers are not used	A	RA/ QA	—
	Condensing Units	Submittal Process/ Field Visit	**Finish** - If indicated in ESR Section D30, verify anti-corrosion coating provided is immersion applied, baked phenolic, or other approved coating. Field applied coatings not acceptable.	A	RA/ QA	—
		Submittal Process	**Air conditioner** - Verify air-cooled, split system air conditioner provided with ducted air distribution	A	QA	—

KEY = A - Approve, R - Review, W - Witness, RA - Receipt Acknowledge, S - Surveilance Review, V- Verification and Testing, C - Copy, QA - Quality Assurance

MECHANICAL ENGINEERING ROLES and RESPONSIBILITIES

System	Sub-Systems	Phase	Elements	ME QC / DOR (Ktr)	FEAD (SIOH)	FEC (PCAS)
Equipment & Components (continued)		Submittal Process	**Construction and rating** - Verify units are factory assembled, designed, tested, and rated in accordance with ARI 210/ 240 or ARI 340/ 360	A	QA	—
		Submittal Process/ Field Visit	**Clearance** - Verify manufacturer's minimum recommended clearance around condensing units is provided	A	RA/ QA	QA
		Field Visit	**Refrigerant piping size** - Verify is per manufacturer's recommendations	A	QA	—
	Heat Pumps - Ground Source	Submittal Process/ Field Visit	**Finish** - If indicated in ESR Section D30, verify anti-corrosion coating provided is immersion applied, baked phenolic, or other approved coating. Field applied coatings not acceptable.	A	RA/ QA	—
		Submittal Process	**Construction and rating** - Verify units are factory assembled, designed, tested, and rated in accordance with ARI 330	A	QA	—
		Submittal Process	**Heat exchanger** - Verify connected to heat exchanger by closed loop ground source vertical well field	A	RA	—
		Submittal Process/ Field Visit	**Well field** - Verify design and installation of each well field comply with IGSHPA and ASHRAE standards	A	RA/ QA	—
	Heat Pumps - Water Source	Submittal Process/ Field Visit	**Finish** - If indicated in ESR Section D30, verify anti-corrosion coating provided is immersion applied, baked phenolic, or other approved coating. Field applied coatings not acceptable.	A	RA/ QA	—
		Submittal Process	**Construction and rating** - Verify units are factory assembled, designed, tested, and rated in accordance with ARI 210/ 240 or ARI 340/ 360	A	QA	—
	Heat Pumps - Air to Air	Submittal Process/ Field Visit	**Finish** - If indicated in ESR Section D30, verify anti-corrosion coating provided is immersion applied, baked phenolic, or other approved coating. Field applied coatings not acceptable.	A	RA/ QA	—
		Submittal Process	**Heat pumps** - Verify air-cooled, split system heat pumps provided with ducted air distribution	A	RA/ QA	—
		Submittal Process	**Construction and rating** - Verify units are factory assembled, designed, tested, and rated in accordance with ARI 210/ 240 or ARI 340/ 360	A	QA	QA
		Field Visit	**Clearance** - Verify manufacturer's minimum recommended clearance around condensing units is provided	A	QA	—
		Field Visit	**Refrigerant piping size** - Verify is per manufacturer's recommendations	A	QA	QA
		Field Visit	**Insulation** - Verify provided for refrigerant piping suction lines and condensate drain	A	QA	—
	Condensate Return Units	Submittal Process/ Field Visit	Verify has floor-mounted receiver and duplex pump unit	A	RA/ QA	—

KEY = A - Approve, R - Review, W - Witness, RA - Receipt Acknowledge, S - Surveilance Review, V- Verification and Testing, C - Copy, QA - Quality Assurance

MECHANICAL ENGINEERING ROLES and RESPONSIBILITIES

System	Sub-Systems	Phase	Elements	ME QC / DOR (Ktr)	FEAD (SIOH)	FEC (PCAS)
Equipment & Components (continued)	**Equipment Thermal Insulation**	Submittal Process/ Field Visit	**Insulation** - Verify insulation provided for hot and chilled water pumps and equipment as suitable for the temperature and service fit as closely as possible to equipment. May be rigid block, semi-rigid board, or flexible unicellular insulation.	A	RA/ QA	QA
			Vapor retarder - Verify provided for chilled water applications	A	QA	—
	Auxilliary Equipment	Submittal Process/ Field Visit	**Steam-to-hot-water converter** - Verify provided as required for application	A	RA/ QA	—
		Submittal Process	**Heat exchangers** - Verify factory assembled u-tube units provided constructed in accordance with ASME BPVC for steam or hot water. For hot water, plate type heat exchangers may be provided.	A	RA	—
	Furnaces	Submittal Process/ Field Visit	**Construction** - Confirm provided furnace is UL-listed, factory assembled, self-contained, and forced circulation	A	RA/ QA	QA
		Submittal Process/ Field Visit	**Electronic ignition system** - Verify provided	A	RA/ QA	—
		Submittal Process/ Field Visit	**Gas furnace rating** - Confirm unit is design certified by AGA and GAMA efficiency rating certified for gas furnaces.	A	RA/ QA	—
		Submittal Process/ Field Visit	**Oil furnace rating** - Confirm unit meets requirements for NFPA 31 for oil furnaces.	A	RA/ QA	—
		Submittal Process/ Field Visit	**Cooling coil** - Verify provided, if necessary	A	RA/ QA	—
	Unit Ventilators	Submittal Process/ Field Visit	Verify unit is a factory assembled unit ventilator capable of up to 100% OA ventilation and UL-Listed	A	RA/ QA	—
	Unit Heaters	Submittal Process/ Field Visit	See D302004 for gas fired unit heaters	A	RA/ QA	—
	Unit Heaters-Steam	Submittal Process/ Field Visit	Verify provided is UL-Listed and factory assembled	A	RA/ QA	—
	Unit Heaters - Hot Water	Submittal Process/ Field Visit	Verify provided is UL-Listed and factory assembled	A	RA/ QA	—
	Unit Heaters - Cabinet	Submittal Process/ Field Visit	Verify provided is UL-Listed and factory assembled	A	RA/ QA	—

KEY = A - Approve, R - Review, W - Witness, RA - Receipt Acknowledge, S - Surveilance Review, V- Verification and Testing, C - Copy, QA - Quality Assurance

MECHANICAL ENGINEERING ROLES and RESPONSIBILITIES

System	Sub-Systems	Phase	Elements	ME QC / DOR (Ktr)	FEAD (SIOH)	FEC (PCAS)
	Fuel-Fired Unit Heaters - Gas	Submittal Process/ Field Visit	Verify meets requirements for ANSI Z83.8 and AGA label	A	RA/ QA	—
		Submittal Process/ Field Visit	**Discharge louver** - Verify each heater equipped with individually adjustable package discharge louver	A	RA/ QA	QA
		Submittal Process/ Field Visit	**Thermostat** - Verify provided	A	RA/ QA	QA
	Fuel-Fired Unit Heaters - Infrared	Submittal Process/ Field Visit	Verify meets requirements for ANSI Z83.8 and AGA label	A	RA/ QA	—
	Unit Heaters - Electric	Submittal Process/ Field Visit	Verify provided are factory assembled, UL-1025	A	RA/ QA	—
	Heaters - Baseboard	Submittal Process/ Field Visit	Verify provided are factory assembled, UL-1042	A	RA/ QA	—
	Heaters - Wall	Submittal Process/ Field Visit	Verify provided are factory assembled, UL-1025, cabinet heaters	A	RA/ QA	—
	Heaters - Infrared	Submittal Process/ Field Visit	Verify provided are factory assembled, UL-Listed and labeled heaters	A	RA/ QA	—
	Fin Tube Radiators & Convectors	Submittal Process	Verify fin tube radiators and convectors provided with copper tubes and aluminum fins	A	RA	—
		Submittal Process	**Control Valves -** Verify control valves provided are normally open, spring return	A	RA/ QA	QA
	Duct Heater	Submittal Process/ Field Visit	Verify provided is factory assembled, UL-Listed heater	A	RA/ QA	—
		Field Visit	Verify adequate duct length is provided per manufacturer's recommendations upstream & downstream	A	QA	—
		Submittal Process/ Field Visit	Verify control cabinet and heating coil provided	A	RA/ QA	—
	Pumps - ALL	Submittal Process/ Field Visit	Verify provided are centrifugal circulating pumps with motor, motor starter, and motor enclosure conforming to the appropriate NEMA standards	A	RA/ QA	—
		Field Visit	**Insulation -** Verify pumps used for hot service and chilled water service are insulated	A	QA	QA

KEY = A - Approve, R - Review, W - Witness, RA - Receipt Acknowledge, S - Surveilance Review, V- Verification and Testing, C - Copy, QA - Quality Assurance

MECHANICAL ENGINEERING ROLES and RESPONSIBILITIES

System	Sub-Systems	Phase	Elements	ME QC / DOR (Ktr)	FEAD (SIOH)	FEC (PCAS)
Equipment & Components (continued)	**Pumps - Base-mounted**	Field Visit	Confirm size and nameplate data matches schedule req	A	QA	QA
		Field Visit	Verify voltage service matches nameplate	A	QA	QA
		Field Visit	Verify provided are single-stage end suction pumps suitable for chilled, condenser, and hot water heating systems	A	QA	QA
		Field Visit	**Isolation Base -** Confirm isolation base is provided where req	A	QA	QA
		Field Visit	**Insulation -** Confirm insulation enclosure is provided where req	A	QA	QA
		Field Visit	Confirm pressure taps, gages, and shutoffs have been provided in the specified locations	A	QA	QA
		Field Visit	**Balancing Valves -** Confirm the balancing valves have been provided in accordance with manufacturers recommendations and/or in accordance with the appropriate contract document detail	A	QA	QA
		Field Visit	**Balancing Valves -** Confirm balancing valves provided with proper clearances	A	QA	QA
		Field Visit	**Rotation -** Verify rotation direction is correct	A	QA	QA
		Field Visit	**Suction diffusers -** Verify suction diffusers provided on base-mounted pumps	A	QA	QA
	Pumps - In-line	Field Visit	**Location -** Confirm location is correct(ie: in accordance with the contract documents)	A	QA	QA
		Field Visit	Verify constructed of manufacturer's standard materials suitable for chilled, condenser, and hot water heating systems	A	QA	QA
		Field Visit	Confirm voltage provided is correct	A	QA	QA
		Field Visit	**Valve Arrangement -** Confirm valve arrangement around the pump is correct	A	QA	QA
		Field Visit	**Balancing Valve -** Confirm balancing valve has been provided in accordance with the contract documents, if req	A	QA	QA
		Field Visit	**Balancing Valve -** Confirm balancing valves provided with proper clearances	A	QA	QA
	Diffusers, Registers, & Grilles	Field Visit	Confirm location, size, and type have been provided in accordance with the contract documents	A	QA	QA
		Field Visit	**Dampers -** Confirm branch balancing dampers have been provided and dampers, if any, provided with the air device are in the wide open position	A	QA	QA
		Field Visit	**Finish** - Verify are factory-finished	A	QA	—
		Field Visit	**Exterior and exposed edges** - Verify are rolled, or otherwise stiffened and rounded	A	QA	—
	Pipe Sleeves	Field Visit	Verify pipe sleeves provided at each wall and floor penetration	A	QA	—
		Field Visit	Verify sleeves are of a material suitable to protect the carrier pipe (2 pipe sizes larger) and sealed with an appropriate flexible material	A	QA	—

KEY = A - Approve, R - Review, W - Witness, RA - Receipt Acknowledge, S - Surveilance Review, V- Verification and Testing, C - Copy, QA - Quality Assurance

MECHANICAL ENGINEERING ROLES and RESPONSIBILITIES

System	Sub-Systems	Phase	Elements	ME QC / DOR (Ktr)	FEAD (SIOH)	FEC (PCAS)
Equipment & Components (continued)		Submittal Process/ Field Visit	**Fire Stopping -** In fire rated walls, verify fire stopping provided inaccordance with IBC	A	RA/ QA	—
	Piping Identification	Field Visit	Verify piping provided with identification labels or stencil names or code letters for piping systems in clearly visible letters and symbols	A	QA	—
		Field Visit	Verify arrow-shaped markings provided to indicate direction of flow	A	QA	QA
	Piping - Condensate Drain	Submittal Process/ Field Visit	Verify condensate drain piping provided is ASTM B 88, Type M or L, hard drawn copper	A	RA/ QA	—
	Piping	Field Visit	**Flushing -** Confirm/ witness pipe flushing (make sure water is clear prior to putting final chemicals into water system)	V	W	—
		Field Visit	**Strainers -** Confirm start-up strainer has been removed from **all** strainers (hang at location)	A	QA	—
		Field Visit	**Air Vents -** Confirm air vents are at specified locations and are auto type, if req	A	QA	QA
		Submittal Process/ Field Visit	**Pressure Relief Valves -** Confirm pressure relief valves are sized properly and installed where specified	A	RA/ QA	QA
		Field Visit	Confirm make-up water pressure setting is sufficient for facility (adjust if req for pressure req at highest point	A	QA	QA
		Field Visit	**Expansion Tanks -** Where diaphragm expansion tanks are provided, confirm tank pressure is set in accordance with nameplate	A	QA	QA
		Field Visit	Confirm valve arrangements for each unit coil are as specified on the contract documents	A	QA	QA
		Field Visit	Confirm all valve clearance req's, manufacturer, and/or contract have been adhered to	A	QA	QA
		Field Visit	**Layout -** Confirm piping layout conforms to the contract documents (physically walk all pipe runs to make sure there are no cross connections)	A	QA	QA
		Field Visit	Confirm traps have been provided on condensate lines per the contract documents	A	QA	
		Field Visit	Confirm slope of condensate lines meets spec req	A	QA	
		Field Visit	**Supports -** Confirm piping supported properly (ie: hangers, saddles, seismic (if req))	A	QA	QA
		Field Visit	**Insulation -** Confirm pipe insulated with specified insulation and vapor barrier is intact	A	QA	QA
		Submittal Process/ Field Visit	**Fittings -** Confirm dialectric fittings have been provided where piping of dissimilar metals connect	A	RA/ QA	—
		Field Visit	Confirm condensate piping from equip has been run to floor drains, if req	A	QA	QA
		Field Visit	**Identification -** Confirm piping is marked properly with water type and direction of flow	A	QA	QA
		Field Visit	Confirm provisions have been made in the piping arrangement at each coil for isolation of flow and ease of coil removal	A	QA	QA

KEY = A - Approve, R - Review, W - Witness, RA - Receipt Acknowledge, S - Surveilance Review, V- Verification and Testing, C - Copy, QA - Quality Assurance

MECHANICAL ENGINEERING ROLES and RESPONSIBILITIES

System	Sub-Systems	Phase	Elements	ME QC / DOR (Ktr)	FEAD (SIOH)	FEC (PCAS)
Components (continued)		Field Visit	Confirm steam piping relief valve has been piped to the exterior of the building in a safe location to personnel	A	QA	QA
		Field Visit	Confirm hazard warning and/or hot surface signage is in place at steam piping, equip. (This also applies to hot water systems)	A	QA	—
		Field Visit	**Flow Meters -** Confirm location of flow meters meets factory req for straight, unobstructed inlet and outlet piping	A	QA	QA
	Chillers	Field Visit	**Leaving Water Temp -** Confirm the leaving chilled water temp is below temp specified for terminal equip to compensate for pump heat gain (approx 1.8F/1.0C) (chiller leaving should **never** be same as temp req at terminal unit)	A	QA	QA
		Submittal Process/ Field Visit	Confirm piping/valve arrangement matches contract documents and balancing valve and flow monitoring device have been provided in accordance with manufacturers req and/or detail	A	RA/ QA	QA
		Submittal Process/ Field Visit	**Decoupler -** Confirm decoupler leg is tied into chilled return piping before entering chilled water return header (for multiple chillers)	A	RA/ QA	QA
		Field Visit	Confirm piping arrangement has allotment for access to the cooling and condensing bundles	A	QA	QA
		Field Visit	**Flow Switch -** Confirm flow switch has been provided to protect the chiller from low or lack of flow	A	QA	QA
		Submittal Process/ Field Visit	Confirm BACNET compatable (if req in contract docs) and that the connection has been made to the DDC control system	A	RA/ QA	QA
	Chiller Systems - Closed Circuit Coolers	Submittal Process	**Construction and rating** - Confirm provided is factory assembled conforming to NFPA 214	A	RA	—
		Submittal Process	**Fire hazard rating** - Verify fire hazard rating for plastic impregnated materials does not exceed 25	A	RA	—
		Submittal Process	**Certification** - Verify Cooling Technology Institute 201 certification of tower capability and performance is provided	A	RA	—
		Submittal Process	**Cooler performance** - Verify meets or exceeds that listed in ASHRAE 90.1	A	RA	—
		Submittal Process/ Field Visit	**Hardware** - Verify stainless steel hardware provided	A	RA/ QA	—
		Submittal Process	**Vibration cutout switch** - Verify interlocked with fan motor	A	RA	—
		Submittal Process	**Fan motors** - Verify 2-speed or adjustable frequency drive fan motors provided	A	RA	—
		Field Visit	**Safety** - Verify OSHA safety requirements for stairs and handrails are met	A	QA	—

KEY = A - Approve, R - Review, W - Witness, RA - Receipt Acknowledge, S - Surveilance Review, V- Verification and Testing, C - Copy, QA - Quality Assurance

MECHANICAL ENGINEERING ROLES and RESPONSIBILITIES

System	Sub-Systems	Phase	Elements	ME QC / DOR (Ktr)	FEAD (SIOH)	FEC (PCAS)
Equipment &	**Chiller Systems - Water Cooled Chillers**	Submittal Process	**Construction and rating** - Verify self-contained chiller provided meeting requirements of ARI 550/590-98	A	RA	—
		Field Visit	**Control panel** - Verify provided with manufacturer's standard controls and protection circuits	A	QA	—
		Submittal Process/ Field Visit	**DDC system** - If DDC system required in project, verify control interface provided for remote monitoring of chiller's operating parameters, functions, and alarms from DDC control system central workstation	A	RA/ QA	QA
		Submittal Process	**Automatic capacity-reduction system** - Verify provided for stable operation from 100 to 10 percent of full load capacity	A	RA	—
	Chiller Systems - Air Cooled	Submittal Process	**Construction and rating** - Verify provided air-cooled chillers are type indicated in Project Program and meet requirements of ARI 550/590-98	A	RA	—
		Submittal Process	**Control panel** - Verify provided with manufacturer's standard controls and protection circuits	A	RA	—
		Submittal Process/ Field Visit	**DDC System** - If DDC system required in project, verify control interface provided for remote monitoring of chiller's operating parameters, functions, and alarms from DDC control system central workstation	A	RA/ QA	QA
		Submittal Process	**Reciprocating chillers** - Verify minimum of four stages of unloading provided at 25% per stage minimum	A	RA	—
		Submittal Process	**Reciprocating chillers** - Verify provided with hot gas bypass	A	RA	—
		Submittal Process	**Head pressure control** - Verify provided for cold temperature operation	A	RA	—
		Submittal Process/ Field Visit	**Freeze protection** - Verify provided for chiller and piping	A	RA/ QA	QA
		Submittal Process/ Field Visit	**Condenser coils** - Verify provided are copper tube with aluminum fins unless specified otherwise	A	RA/ QA	QA
		Submittal Process/ Field Visit	**Condenser coils** - If condenser coil coatings indicated in ESR Section D30, verify provided with copper tube/ copper fin construction or immersion applied, baked phenolic, or other approved coating. Field applied coatings not acceptable.	A	RA/ QA	QA
		Submittal Process/ Field Visit	**Condenser coils** - Verify condenser coils provided with manufacturer's optional louvered covers or hail guards for protection against vandalism, debris, or hail	A	RA/ QA	—
	Cooling Tower	Field Visit	Confirm tower size HP, voltage per contract docs	A	QA	QA
		Submittal Process/ Field Visit	Confirm tower constructed in accordance with specs (ie: galvanized, stainless steel, fiber-glass)	A	RA/ QA	QA
		Submittal Process/ Field Visit	**Sump** - Confirm height of cooling tower sump is above intake of condenser water pumps (min of 3 to 4 feet)	A	RA/ QA	QA

KEY = A - Approve, R - Review, W - Witness, RA - Receipt Acknowledge, S - Surveilance Review, V- Verification and Testing, C - Copy, QA - Quality Assurance

MECHANICAL ENGINEERING ROLES and RESPONSIBILITIES

System	Sub-Systems	Phase	Elements	ME QC / DOR (Ktr)	FEAD (SIOH)	FEC (PCAS)
Equipment & Components (continued)		Submittal Process/ Field Visit	Confirm return line to tower has trap leg below well unless the by-pass is piped directly to cooling tower well	A	RA/ QA	QA
		Field Visit	**Overflow -** Confirm tower well overflow is low enough to prevent the well from overflowing	A	QA	QA
		Field Visit	**Make-up Float -** Confirm tower well make-up float setting shuts of prior to water level reaching the top of the overflow	A	QA	QA
		Field Visit	**Fan Rotation -** Confirm tower fan rotation is correct	A	QA	QA
		Field Visit	**Well Heater -** Confirm tower well heater is installed, if req	A	QA	QA
		Field Visit	**Shut-off Valve -** Confirm tower shut-off valve has been installed in proper location, if req	A	QA	QA
		Field Visit	**Fan Discharge -** Confirm tower fan discharge is unobstructed from above	A	QA	QA
		Field Visit	**Heat Trace -** Confirm tower piping above grade is heat traced, if req	A	QA	QA
		Submittal Process	**Construction and rating** - Confirm provided is factory assembled conforming to NFPA 214	A	RA	—
		Submittal Process	**Fire hazard rating** - Confirm fire hazard rating for plastic impregnated materials does not exceed 25	A	RA	—
		Submittal Process	**Certification** - Verify Cooling Technology Institute 201 certification of tower capability and performance is provided	A	RA	—
		Submittal Process	**Cooling tower performance** - Verify meets or exceeds that listed in ASHRAE 90.1	A	RA	—
		Submittal Process/ Field Visit	**Construction** - Verify construction is as indicated in ESR Section D30 with fill material of PVC formed sheets	A	RA/ QA	—
		Submittal Process/ Field Visit	**Hardware** - Verify stainless steel hardware provided	A	RA/ QA	—
		Submittal Process	**Vibration cutout switch** - Verify interlocked with fan motor	A	QA	—
		Submittal Process	**Fan motors** - Verify 2-speed or adjustable frequency drive fan motors provided	A	QA	—
		Submittal Process/ Field Visit	**Work platforms** - Verify provided at all locations in tower that require periodic maintenance	A	RA/ QA	
		Submittal Process/ Field Visit	**Isolation valves** - For multi-cell installations, verify isolation valves provided on inlets and outlets of each cell	A	RA/ QA	—
	Fan Coil Units	Field Visit	Confirm size and location in accordance with contract docs	A	QA	QA
		Field Visit	**Filter Access -** Confirm filter accessibility	A	QA	QA
		Field Visit	Confirm vibration isolation provided for on hangers and at ductwork connection	A	QA	QA
		Field Visit	Confirm installation of auxilliary drain pan (if req) along with respective condensate drain piping	A	QA	QA

KEY = A - Approve, R - Review, W - Witness, RA - Receipt Acknowledge, S - Surveilance Review, V- Verification and Testing, C - Copy, QA - Quality Assurance

MECHANICAL ENGINEERING ROLES and RESPONSIBILITIES

System	Sub-Systems	Phase	Elements	ME QC / DOR (Ktr)	FEAD (SIOH)	FEC (PCAS)
Equipment & Components (continued)		Field Visit	Confirm valves arranged properly including the straight pipe diameters req before and after the balancing valve	A	QA	QA
		Submittal Process/ Field Visit	**Speed Controller -** Confirm speed controller has been provided, if req in contract docs	A	RA/ QA	QA
		Field Visit	**Fan Access -** Confirm fan access is accessible by maintenance staff	A	QA	QA
		Field Visit	Confirm unit tagging has been provided	A	QA	—
		Field Visit	Confirm operational	A	QA	—
		Submittal Process/ Field Visit	**Sensors -** Confirm leaving air temp sensor has been provided	A	RA/ QA	QA
		Submittal Process	Verify provided are UL-Listed, factory assembled and tested fan coils, ARI 440, and ARI certified	A	QA	—
	Thru Wall Classroom Terminal Units	Field Visit	Confirm size and location in accordance with contract docs	A	QA	QA
		Field Visit	Confirm operational	A	QA	—
		Field Visit	Confirm piping arrangement meets contract docs req's	A	QA	QA
	Packaged Thru Wall Units	Submittal Process	Verify provided is factory assembled air conditioner or heat pump and rated in accordance with ARI 310 or ARI 380 and ARI certified	A	RA	—
		Submittal Process	Verify provided unit includes heat and operates under the standard unit controls (Not sure if worded correctly, D305006 1.4)	A	RA	—
		Submittal Process	**Wall Sleeve -** Verify unit designed to allow ease of maintenance by use of a wall sleeve	A	RA	QA
		Submittal Process/ Field Visit	**Condensate Removal -** Verify provided unit includes internal condensate removal (condensate shall not be externally drained)	A	RA/ QA	QA
	Room Air Conditioners	Submittal Process	Verify provided is factory assembled air conditioner or heat pump and rated in accordance with AHAM RAC-1	A	RA	—
		Submittal Process/ Field Visit	Verify auxiliary electric heat included and operates under the standard unit controls	A	RA/ QA	QA
		Submittal Process	Verify provided unit is AHAM certified or listed in AHAM DCRAC	A	RA	—
	Computer Room Units	Field Visit	Confirm size and location	A	QA	QA
		Field Visit	Confirm all features have been provided	A	QA	QA
		Field Visit	Confirm water connection to humidifier	A	QA	QA
		Field Visit	**Fan Rotation -** Confirm fan rotation	A	QA	QA
		Submittal Process	If computer room unit req'd, verify DOR utilized UFGS Spec section 23 81 23.00 20 (Computer Room Air Conditioning Units) for the project spec and submitted the edited spec section as part of the design submittal for the project	A	RA	—
	Boilers	Field Visit	Confirm size and location	A	QA	—
		Field Visit	**Stack -** Confirm stack material and arrangement meet contract doc req's	A	QA	QA

KEY = A - Approve, R - Review, W - Witness, RA - Receipt Acknowledge, S - Surveilance Review, V- Verification and Testing, C - Copy, QA - Quality Assurance

MECHANICAL ENGINEERING ROLES and RESPONSIBILITIES

System	Sub-Systems	Phase	Elements	ME QC / DOR (Ktr)	FEAD (SIOH)	FEC (PCAS)
		Field Visit	**Stack -** Confirm stack above roof does not touch roof curb and guy wires have been provided	A	QA	QA
		Field Visit	**Stack -** Confirm stack type is per contract docs and the height above the parapet and/or building meets code req's	A	QA	QA
		Field Visit	Confirm fuel train meets contract docs and code req's with no leaks	A	QA	QA
		Submittal Process/ Field Visit	**Make-up Air -** Confirm adequate make-up air for the boiler(s) has been provided under positive pressure to the room	A	RA/ QA	QA
		Field Visit	**Relief Valve -** Confirm relief valve setting and operation	A	QA	—
		Field Visit	**DDC -** Confirm boilers have been interfaced with the DDC system	A	QA	QA
		Field Visit	Confirm pump/piping arrangement meets contract docs including circulation pump, if req	A	QA	QA
		Submittal Process/ Field Visit	Confirm boiler sequencing panel has been provided by the boiler manufacturer, if req in the contract docs	A	RA/ QA	QA
	Boilers - Hot Water	Submittal Process	**Load capacity** - Verify boiler type provided meets building load capacity as indicated in ESR Section D30, if required	A	RA	—
		Submittal Process/ Field Visit	**Construction and rating** - Verify boiler designed, tested, and installed per ASME CSD-1 (Controls and Safety Devices) and ASME BPVC (Boiler and Pressure Vessel Code)	A	RA/ QA	—
		Submittal Process/ Field Visit	**Construction** - Verify boiler meets requirements of UL 795, ANSI Z83.3, and ASME CSD	A	RA/ QA	—
		Submittal Process/ Field Visit	**Burners** - Confirm provided are make, model, and type certified and approved by manufacturer of provided boiler	A	RA/ QA	—
		Submittal Process/ Field Visit	Verify burner controls and flame safety equipment conform to either ASME CSD-1 or NFPA 58 as dictated by input	A	RA/ QA	—
		Submittal Process/ Field Visit	**Boiler controls** - Verify are mounted on a single control panel mounted on the burner or separate from the burner (includes operating switches, indicating lights, gages, alarms, motor starters, fuses, and circuit elements of the control system). If separa	A	RA/ QA	—
		Submittal Process/ Field Visit	**Trim** - Verify boiler trim complies with ASME BPVC SEC IV, ASME CSD-1, and additional appurtenances as specified herein	A	RA/ QA	—
		Submittal Process/ Field Visit	**Pressure gages** - Confirm provided have scale equivalent to 1.5 times the outlet water pressure on supply water piping and return water piping	A	RA/ QA	—
		Submittal Process/ Field Visit	**Thermometers - Piping** - Confirm provided have scale equivalent to 1.5 times the outlet water temperature on supply water piping and return water piping	A	RA/ QA	—
		Field Visit	**Drain valve** - Verify provided and piped to floor drain	A	QA	—

MECHANICAL ENGINEERING ROLES and RESPONSIBILITIES

System	Sub-Systems	Phase	Elements	ME QC / DOR (Ktr)	FEAD (SIOH)	FEC (PCAS)
Equipment & Components (continued)		Submittal Process/ Field Visit	**Air vent valve** - Verify provided with screwed connection, stainless steel disk, and stainless steel seats to vent entrapped air	A	RA/ QA	—
		Submittal Process	**Boiler stack** - Verify provided boiler stack insulated in accordance with manufacturer's recommendations and conform to NFPA 211, or pre-manufactured multi-wall stacks provided complying with NFPA 54 or NFPA 58 and UL-listed	A	RA	—
		Submittal Process/ Field Visit	**Thermometer - Flue gas** - Verify provided and mounted in flue gas outlet	A	RA/ QA	—
		Field Visit	**Cleaning** - Verify boiler(s) cleaned in accordance with ASME Boiler and Pressure Vessel Code and manufacturer's recommendations prior to startup	A	QA	—
		Field Visit	**Testing** - Verify services are furnished of an engineer or technician approved by the boiler manufacturer for installation, startup, and operational and safety testing	V	W	W
		Field Visit	**Testing** - Verify boiler demonstrates proper operability of combustion control, flame safeguard control, and safety interlocks	V	W	W
	Boilers - Steam		**Confirm meets same requirements specified for hot water boilers except as follows:**			
		Submittal Process/ Field Visit	**Pressure gage** - Confirm provided have scale equivalent to 1.5 times the outlet water pressure on boiler feedwater supply piping and condensate return water piping	A	RA/ QA	—
		Submittal Process/ Field Visit	**Pressure gage** - Confirm provided boiler steam pressure gage has scale equivalent to 1.5 times the boiler rated working pressure	A	RA/ QA	—
		Submittal Process/ Field Visit	**Thermometers - Piping** - Confirm provided have scale equivalent to 1.5 times the outlet water temperature on boiler feedwater piping and return water piping	A	RA/ QA	—
	Insulation - Condensate Drain	Field Visit	**Insulation -** Verify condensate drain piping insulated with flexible cellular insulation	A	QA	—
	Insulation	Field Visit	Verify all ductwork provided with external thermal insulation	A	QA	—

KEY = A - Approve, R - Review, W - Witness, RA - Receipt Acknowledge, S - Surveilance Review, V- Verification and Testing, C - Copy, QA - Quality Assurance

MECHANICAL ENGINEERING ROLES and RESPONSIBILITIES

System	Sub-Systems	Phase	Elements	ME QC / DOR (Ktr)	FEAD (SIOH)	FEC (PCAS)
Equipment & Components (continued)		Field Visit	Verify all ductwork in concelaed spaces insulated with blanket flexible mineral fiber	A	QA	—
		Field Visit	Verify ductwork in mechanical Rooms and exposed locations insulated with rigid mineral fiber insulation	A	QA	—
		Field Visit	Verify insulation provided with factory applied all-purpose jacket with integral vapor retarder	A	QA	—
		Field Visit	In exposed locations, verify jacket provided with white surface suitable for painting	A	QA	—
		Submittal Process/ Field Visit	Verify flame spread/smoke developed rating for all insulation does not exceed 25/ 50	A	RA/ QA	—
		Submittal Process	Verify minimum insulation thickness does not violate minimum required by ASHRAE 90.1	A	RA	—
		Field Visit	Verify the backs of all supply air diffusers insulated with blanket flexible mineral fiber insulation	A	QA	QA
	VFDs	Submittal Process/ Field Visit	Verify are factory-assembled VFD drive control systems for variable speed control	A	RA/ QA	QA
		Submittal Process/ Field Visit	Verify all AHU and pump VFD's are from same manufacturer	A	RA/ QA	QA
		Submittal Process/ Field Visit	Verify each VFD provided includes motor starter, motor disconnects, and controls as required for a complete system	A	RA/ QA	QA
		Submittal Process/ Field Visit	Verify VFD units provided are UL-Listed and comply with the National Electric Code	A	RA/ QA	—
		Submittal Process/ Field Visit	Verify the following accessories were provided: Disconnect switch, Control circuit transformer with primary and secondary fuses, Manual bypass, System hand-off-auto switch with provisions for remote start/stop of the system, System initialized light, Run	A	RA/ QA	QA
	Air Separators	Submittal Process/ Field Visit	**For hot and chilled water -** Verify provided are ASME rated air separators with tangential inlet and outlet connections and automatic air vent	A	RA/ QA	—
	Solids Separators	Submittal Process/ Field Visit	Verify provided are centrifugal solids separators with automatic drain in open systems.	A	RA/ QA	—
	Expansion Tanks	Submittal Process/ Field Visit	For hot and chilled water - Verify provided are ASME rated expansion tanks with polypropylene or butyl diaphragm or compression tanks as indicated in UFC 3-400-10N.	A	RA/ QA	—
	Make-Up Water Station	Field Visit	Verify station consists of a water pressure-reducing valve, filter, and relief valve in the make-up water line to the chilled and hot water systems to maintain the operating pressure	A	QA	—
		Field Visit	Verify a 20mm (3/4 inch) globe valve by-pass provided around the pressure reducing station	A	QA	—
		Field Visit	Verify a reduced pressure backflow preventer provided upstream of the by-pass	A	QA	—

KEY = A - Approve, R - Review, W - Witness, RA - Receipt Acknowledge, S - Surveilance Review, V- Verification and Testing, C - Copy, QA - Quality Assurance

MECHANICAL ENGINEERING ROLES and RESPONSIBILITIES

System	Sub-Systems	Phase	Elements	ME QC / DOR (Ktr)	FEAD (SIOH)	FEC (PCAS)
ent & Components (continued)	**Glycol Make-Up Station**	Submittal Process/ Field Visit	If required, verify a glycol make-up system provided to maintain system proper operating mixture	A	RA/ QA	—
	Chemical Treatment	Submittal Process/ Field Visit	If required, verify chilled and hot water systems provided with automatic chemical treatment system for the control of pH, scale formation, and corrosion inhibition	A	RA/ QA	—
		Field Visit	Verify shot-type feeders provided for manual chemical feed	A	QA	—
		Submittal Process	Verify feeders rated for use with pressures up to 900 kPa (130 PSI) (gage)	A	RA	—
		Submittal Process/ Field Visit	Verify condenser water systems provided with automatic chemical treatment systems that monitor conductivity, pH, etc, and provide for water metering and bleed-off	A	RA/ QA	—
		Submittal Process/ Field Visit	Verify chemicals provided are in accordance with EPA and equipment manufacturer's recommendations	A	RA/ QA	—
	System Flushing	Field Visit	Verify hydronic systems flushed thoroughly prior to system startup	A	QA	—
	Heat Tape	Submittal Process/ Field Visit	Verify heat tape provided is UL-Listed, and self-regulating	A	RA/ QA	—
		Submittal Process/ Field Visit	Verify heat tape provided on piping subject to freezing	A	RA/ QA	QA
	Terminal & package Units	Submittal Process/ Field Visit	Where required in ESR Section D30, verify anti-corrosion coating provided on the casing and both the condenser and evaporater coils to protect against salt air damage	A	RA/ QA	—
		Submittal Process/ Field Visit	Verify anti-corrosion coating is immersion applied, baked phenolic or other approved coating (Field applied coatings are not acceptable)	A	RA/ QA	—
	Seismic Design	Submittal Process	Verify provided inaccordance with UFC 3-400-10N, Mechanical Engineering	A	RA	—
	Energy Recovery Wheel (Enthalpy Wheel)	Field Visit	Verify provided is a total energy (enthalpy) type energy recovery wheel (heat wheel)	A	QA	—
		Submittal Process/ Field Visit	**Media -** Verify media is aluminum or a lightweight polymer coated with a corrosion resistance finish (Etched or oxidized surfaces are not acceptable)	A	RA/ QA	—
		Submittal Process/ Field Visit	Verify heat transfer surfaces are coated with a non-migrating (permanently bonded) absorbent specifically developed for the selective transfer of water vapor	A	RA/ QA	—
		Submittal Process	Verify equal sensible and latent recovery efficiencies are documented through a certification program conducted per ASHRAE 84 and ARI 1060	A	RA	—

KEY = A - Approve, R - Review, W - Witness, RA - Receipt Acknowledge, S - Surveilance Review, V- Verification and Testing, C - Copy, QA - Quality Assurance

System	Sub-Systems	Phase	Elements	ME QC / DOR (Ktr)	FEAD (SIOH)	FEC (PCAS)
Equipme		Submittal Process/ Field Visit	Verify energy recovery wheel provided with insulating housing of double wall construction, rotor seals specifically designed to limit cross-contamination, and a rotation detector	A	RA/ QA	—
		Field Visit	Verify the rotation detector alarms the HVAC control system if rotation stops	A	QA	—
		Field Visit	**Filter Access -** Verify filter sections are readily accessible for maintenance	A	QA	QA
	Heat Pipes	Submittal Process	Verify provided are factory fabricated, assembled and tested heat pipes with counter-flow arrangement	A	RA	—
		Submittal Process	Verify are provided with hermitically sealed, seamless aluminum tube cores with extended surfaces	A	RA	—
		Submittal Process	Verify heat exchanger frame constructed of not less than 16-gage galvanized steel and fitted with intermediate tube supports and flange connections	A	RA	—
		Submittal Process	Verify tube end covers and a partition of galvanized steel provided to separate exhaust and supply air streams without cross-contamination	A	RA	—
		Submittal Process	**Refrigerant -** Verify refrigerant used as the working fluid (Type I refrigerants are not allowed)	A	RA	—
	Exterior Piping Manholes	Submittal Process/ Field Visit	**Manholes -** Verify system manholes are constructed of reinforced, 206.8 bar (3000 psi) concrete. Verify manhole floor and sides are watertight and were made in one monolithic pour. Verify manhole top extends a minimum of 300 mm (6 inches) above grade. V	A	RA/ QA	—
		Submittal Process	Verify a sump pit and a vertical sump pump designed for an operating temperature design of 93 degrees C (195 degrees F) minimum are provided in each system manhole.	A	RA	—
		Submittal Process	**Sump Pump - Float Control -** Verify a 2-pole float control is provided for each manhole sump pump.	A	RA	—
	Exterior Piping Cathodic Protection	Field Visit	If underground steel piping is installed, verify a cathodic protection system is provided.	A	QA	—
		Submittal Process	If a cathodic protection system is provided, verify the system was designed by a National Association of Corrosion Engineers (NACE) certified Cathodic Protection Engineer and they supervised, inspected and tested the installation and performance of the ca	A	QA	QA
		Field Visit	Verify the test stations were post mounted and placed at the manhole or nearby building and test stations were provided at each end of each cathodically protected section.	A	QA	—
	DDC		Verify one of the following provided as directed in ESR Section D30			
		Submittal Process	A) Verify Direct Digital Controls (DDC) provided to comply with UFGS Section 23 09 54.00 20, Direct Digital Control Systems	A	RA	—

KEY = A - Approve, R - Review, W - Witness, RA - Receipt Acknowledge, S - Surveilance Review, V- Verification and Testing, C - Copy, QA - Quality Assurance

MECHANICAL ENGINEERING ROLES and RESPONSIBILITIES

System	Sub-Systems	Phase	Elements	ME QC / DOR (Ktr)	FEAD (SIOH)	FEC (PCAS)
Equipment & Components (continued)		Submittal Process	A) Verify DOR utilized UFGS Spec Section 23 09 54.00 20, Direct Digital Control Systems, for the project spec, and submitted the edited spec section as part of the design submittal for the project	A	RA	—
		Submittal Process/ Field Visit	B) Verify a partial DDC system provided that communicates with the existing DDC system	A	RA/ QA	—
		Submittal Process	B) Notwithstanding any other provisions of this contract, no other product will be acceptable other than that indicated in ESR Section D30	A	RA	—
		Submittal Process/ Field Visit	B) Verify the system has stand alone digital controllers, a communication network, and a workstation computer with control software (Pneumatic controllers and components are not acceptable)	A	RA/ QA	—
		Submittal Process	B) Verify all 120-volt wiring complies with NFPA 70	A	RA	—
		Submittal Process/ Field Visit	B) Verify all 24-volt wiring complies with the IMC and terminal device manufacturer's recommendations	A	RA/ QA	—
	DDC - Equipment Controllers	Submittal Process/ Field Visit	Verify DDC hardware are UL-916 rated	A	RA/ QA	—
		Submittal Process/ Field Visit	Verify controllers used in a distributed control manner	A	RA/ QA	QA
		Submittal Process/ Field Visit	Verify controllers are stand alone with an internal clock and modem	A	RA/ QA	QA
		Submittal Process	Verify the total number of I/O hardware points do not exceed 48 in any controller	A	RA	QA
		Submittal Process	Verify sufficient memory provided for each controller to support required control, communication, trends, alarms, and messages	A	RA	QA
		Submittal Process/ Field Visit	Verify communications ports provided for controller to controller, on-site interface, remote workstation interface, and telecommunications interface	A	RA/ QA	QA
	DDC - Electronic Controls	Submittal Process/ Field Visit	If required, verify programmable thermostats provided with built in keypads for scheduling of day and night temps with two setback periods per day	A	RA/ QA	QA
		Submittal Process/ Field Visit	Verify independent summer and winter programs provided	A	RA/ QA	QA
		Submittal Process/ Field Visit	Verify thermostats have temporary and manual override of schedule and battery backup	A	RA/ QA	QA
	All Submittals	Submittal Process	All equipment and controls hardware reviewed by A/E	A	RA	RA
	DALTS - Submittals	Submittal Process	TAB contractor qualifications & certification	RA	RA	A
		Submittal Process	DALT test equip with certification	RA	RA	A

KEY = A - Approve, R - Review, W - Witness, RA - Receipt Acknowledge, S - Surveilance Review, V- Verification and Testing, C - Copy, QA - Quality Assurance

MECHANICAL ENGINEERING ROLES and RESPONSIBILITIES

System	Sub-Systems	Phase	Elements	ME QC / DOR (Ktr)	FEAD (SIOH)	FEC (PCAS)
		Submittal Proces	DALT test plan	RA	RA	A
		Submittal Proces	DALT tests report including plan drawing of duct to be tested and square foot calc for each section	RA	RA	A
	DALTS - Testing	Submittal Process	Ductwork to be DALT'd	RA	RA	A
		Field Visit	Testing	V	W	W
		Submittal Proces	Pre-final DALT report	RA	C	A
		Submittal Proces	Certified final DALT report	RA	C	A
	DALTS - Acceptance Testing	Field Visit	Quality assurance - Contracting officer DALT field checks	V	W	W
		Field Visit	Additional field checks	V	W	W
	TABS - Submittals	Submittal Process	TAB contractors qualifications & certification	RA	RA	A
		Submittal Process	Pre-TAB engineering report	RA	RA	A
		Submittal Process	*Discussion on TAB procedure	RA	RA	A
		Submittal Process	*Pre-requisite checklist	RA	RA	A
		Submittal Process	*Design review report	RA	RA	A
		Submittal Process	*Preliminary TAB test report	RA	RA	A
		Submittal Process	Certified TAB test report (Season 1)	RA	RA	A
		Submittal Process	Certified TAB test report (Season 2 (coil data))	RA	RA	A
	TABS - Pre-Test Checklist		**1) Variable Air Volume Series Boxes**			
			a) General			
		Field Visit	Louvers installed	V	W	—
		Field Visit	Manual dampers open and locked	V	W	—
		Field Visit	Automatic dampers set properly	V	W	—
		Field Visit	Housing construction leakage	V	W	—
		Field Visit	Access doors per plans & specs.	V	W	—
		Field Visit	Condensate drain piping & pan	V	W	—
		Field Visit	Free from dirt & debris	V	W	—
		Field Visit	Nameplate data clearly visible	V	W	—
			b) Filters			
		Field Visit	Type / size / number correct	V	W	—
		Field Visit	Clean	V	W	—
		Field Visit	Blank-off plates installed	V	W	—
		Field Visit	Frame leakage at a minimum	V	W	—
			c) Coils (Hydronic – Water / Steam)			
		Field Visit	Size & rows	V	W	—
		Field Visit	Fin spacing & condition	V	W	—
		Field Visit	Obstructions and/or debris	V	W	—
		Field Visit	Correct air flow direction	V	W	—
		Field Visit	Correct piping connections / flow	V	W	—

KEY = A - Approve, R - Review, W - Witness, RA - Receipt Acknowledge, S - Surveilance Review, V- Verification and Testing, C - Copy, QA - Quality Assurance

System	Sub-Systems	Phase	Elements	ME QC / DOR (Ktr)	FEAD (SIOH)	FEC (PCAS)
		Field Visit	Valves open & set	V	W	—
		Field Visit	Vents / traps installed correctly	V	W	—
		Field Visit	Provisions for TAB measurements	V	W	—
			d) Coils (Electric)			
		Field Visit	Size & construction	V	W	—
		Field Visit	Airflow direction	V	W	—
		Field Visit	Duct connections	V	W	—
		Field Visit	Safety switches	V	W	—
		Field Visit	Obstructions	V	W	—
		Field Visit	Free from debris	V	W	—
		Field Visit	Contractors & disconnect switches	V	W	—
		Field Visit	Electrical service & connections	V	W	—
		Field Visit	Nameplate data clearly visible	V	W	—
			e) Fans			
		Field Visit	Rotation	V	W	—
		Field Visit	Wheel clearance & balance	V	W	—
		Field Visit	Bearing & motor lubrication	V	W	—
		Field Visit	Drive alignment	V	W	—
		Field Visit	Belt tension	V	W	—
		Field Visit	Drive set screws tight	V	W	—
		Field Visit	Belt guards in place	V	W	—
		Field Visit	Flex duct connector alignment	V	W	—
		Field Visit	Proper unit / duct alignment	V	W	—
		Field Visit	Starters & disconnect switches	V	W	—
		Field Visit	Electrical service & connections	V	W	—
		Field Visit	Nameplate data clearly visible	V	W	—
			f) Vibration isolation			
		Field Visit	Springs & compression	V	W	—
		Field Visit	Base level & free	V	W	—
			2) DUCT SYSTEMS			
			a) General			
		Field Visit	Manual damper positioned & locked	V	W	—
		Field Visit	Damper adjustments accessible	V	W	—
		Field Visit	Access doors closed & tight	V	W	—
		Field Visit	Fire dampers open & accessible	V	W	—
		Field Visit	Terminal units open & set	V	W	—
		Field Visit	Registers/diffusers wide open & set	V	W	—
		Field Visit	Turning vanes in square elbows	V	W	—
		Field Visit	Provisions made for TAB tests	V	W	—
		Field Visit	System installed per plans & specs.	V	W	—
		Field Visit	All ductwork sealed as required	V	W	—
			b) Architectural			
		Field Visit	Windows installed & closed	V	W	—
		Field Visit	Doors closed as required	V	W	—
		Field Visit	Ceiling plenums installed/sealed	V	W	—
		Field Visit	Access doors closed & tight	V	W	—
		Field Visit	Air shafts/openings as required	V	W	—
			3) PUMPS			
			a) Motors			
		Field Visit	Rotation	V	W	—

KEY = A - Approve, R - Review, W - Witness, RA - Receipt Acknowledge, S - Surveilance Review, V- Verification and Testing, C - Copy, QA - Quality Assurance

MECHANICAL ENGINEERING ROLES and RESPONSIBILITIES

System	Sub-Systems	Phase	Elements	ME QC / DOR (Ktr)	FEAD (SIOH)	FEC (PCAS)
System Acceptance (continued)		Field Visit	Lubrication	V	W	—
		Field Visit	Alignment	V	W	—
		Field Visit	Set screws tight	V	W	—
		Field Visit	Guards in place	V	W	—
		Field Visit	Tank level and controls	V	W	—
		Field Visit	Starters & disconnects	V	W	—
		Field Visit	Electrical service & connections	V	W	—
			b) Piping			
		Field Visit	Correct flow	V	W	—
		Field Visit	Correct connections	V	W	—
		Field Visit	Leakage	V	W	—
		Field Visit	Valves positioned & set	V	W	—
		Field Visit	Strainers clean	V	W	—
		Field Visit	Air Vented	V	W	—
		Field Visit	Flexible connectors installed	V	W	—
		Field Visit	Provisions made for TAB tests	V	W	—
		Field Visit	System water clean	V	W	—
			c) Bases			
		Field Visit	Vibration isolation	V	W	—
		Field Visit	Grouting (if required)	V	W	—
		Field Visit	Leveling	V	W	—
			4) HYDRONIC EQUIPMENT			
			a) Boilers			
		Field Visit	Operating controls & devices	V	W	—
		Field Visit	Safety controls & devices	V	W	—
		Field Visit	Lubrication of fans & pumps	V	W	—
		Field Visit	Draft controls & devices	V	W	—
		Field Visit	Piping controls & devices	V	W	—
		Field Visit	Valves set & open	V	W	—
		Field Visit	Water make-up provisions	V	W	—
		Field Visit	Blowdown provisions	V	W	—
		Field Visit	Electrical connections	V	W	—
		Field Visit	Nameplate data clearly visible	V	W	—
			b) Heat Exchangers			
		Field Visit	Correct flow & connections	V	W	—
		Field Visit	Valves open or set	V	W	—
		Field Visit	Air vents or steam traps	V	W	—
		Field Visit	Leakage	V	W	—
		Field Visit	Provisions made for TAB tests	V	W	—
		Field Visit	Nameplate data clearly visible	V	W	—
			c) Cooling Towers/Evaporative Condensers			
		Field Visit	Correct flow & connections	V	W	—
		Field Visit	Valves open or set	V	W	—
		Field Visit	Leakage	V	W	—
		Field Visit	Provisions made for TAB tests	V	W	—
		Field Visit	Sump water level	V	W	—
		Field Visit	Spray nozzles	V	W	—
		Field Visit	Fan/Pump rotation	V	W	—
		Field Visit	Motor/Fan lubrication	V	W	—
		Field Visit	Drives & alignment	V	W	—

KEY = A - Approve, R - Review, W - Witness, RA - Receipt Acknowledge, S - Surveilance Review, V- Verification and Testing, C - Copy, QA - Quality Assurance

MECHANICAL ENGINEERING ROLES and RESPONSIBILITIES

System	Sub-Systems	Phase	Elements	ME QC / DOR (Ktr)	FEAD (SIOH)	FEC (PCAS)
System Acceptance (continued)		Field Visit	Guards in place	V	W	—
		Field Visit	Starters & disconnects	V	W	—
		Field Visit	Electrical connections	V	W	—
		Field Visit	Nameplate data clearly visible	V	W	—
			5) REFRIGERANT EQUIPMENT			
		Field Visit	Crankcase heaters energized	V	W	—
		Field Visit	Operating controls & devices	V	W	—
		Field Visit	Safety controls & devices	V	W	—
		Field Visit	Valves open	V	W	—
		Field Visit	Piping connections & flow	V	W	—
		Field Visit	Flexible connectors	V	W	—
		Field Visit	Oil level & lubrication	V	W	—
		Field Visit	Alignment & drives	V	W	—
		Field Visit	Guards in place	V	W	—
		Field Visit	Vibration isolation	V	W	—
		Field Visit	Starters/Contactors/Disconnects	V	W	—
		Field Visit	Electrical connections	V	W	—
		Field Visit	Nameplate data clearly visible	V	W	—
			6) HYDRONIC PIPING SYSTEM			
		Field Visit	Leak tested	V	W	—
		Field Visit	Fluid levels & make-up	V	W	—
		Field Visit	Relief or safety valves	V	W	—
		Field Visit	Expansion tanks & air vents	V	W	—
		Field Visit	Steam traps & connections	V	W	—
		Field Visit	Strainers clean	V	W	—
		Field Visit	Valves open & set	V	W	—
		Field Visit	Provisions made for TAB tests	V	W	—
		Field Visit	Systems installed per plans & specs.	V	W	—
			7) CONTROLS & CONTROL SYSTEMS			
		Field Visit	Data centers	V	W	—
		Field Visit	Outdoor/return Air/reset	V	W	—
		Field Visit	Economizer set & tested	V	W	—
		Field Visit	AHU Static pressure set	V	W	—
		Field Visit	Room controls calibrated	V	W	—
		Field Visit	VAV box regulators set to design	V	W	—
		Field Visit	VAV box P.E. switches set	V	W	—
		Field Visit	Proper end-of-line static pressure	V	W	—
		Field Visit	VAV box reheats tested	V	W	—
			8) OTHER CHECKS			
		Submittal Process	Appropriate contractors notified of TABS	A	RA	S
		Submittal Process	Preliminary data complete	A	RA	S
		Submittal Process	Test report forms prepared	S	RA	A

KEY = A - Approve, R - Review, W - Witness, RA - Receipt Acknowledge, S - Surveilance Review, V- Verification and Testing, C - Copy, QA - Quality Assurance

MECHANICAL ENGINEERING ROLES and RESPONSIBILITIES

System	Sub-Systems	Phase	Elements	ME QC / DOR (Ktr)	FEAD (SIOH)	FEC (PCAS)
	TABS - Testing	Field Visit	TAB field work	V	W	
		Submittal Process	Preliminary procedures	RA	C	A
		Field Visit	TAB air distrbution systems	V	W	—
		Field Visit	TAB water distribution systems	V	W	—
		Field Visit	Sound measurement work	V	W	—
		Field Visit	TAB work on performance tests without seasonal limitations	V	W	—
		Field Visit	TAB work on performance tests with seasonal limitations	V	W	—
		Field Visit	Marking settings	V	W	—
		Field Visit	Marking of test ports	V	W	—
	TABS - Acceptance Testing	Field Visit	Quality assurance - Contracting officer TAB field checks	V	W	W
		Field Visit	Additional field checks	V	W	W
	ACATS - Submittals	Submittal Process	Controls contractor qualifications	RA	RA	A
		Submittal Process	Manufacturers field report	RA	RA	A
		Submittal Process	Performance verification test plan (PVT)	RA	RA	A
		Submittal Process	Pre-PVT checklist	RA	RA	A
		Submittal Process	Final certified PVT report (with all mods incorporated in as-builts)	RA	RA	A
	ACATS - Pre-PVT Checklist	Field Visit	Prior to conducting the PVT, thoroughly inspect the installed work with the Contractor's QC representative and the mechanical contractor using the following checklist. Submit the checklist with items checked off once verified. Provide a detailed explana	V	W	—
		Field Visit	a. Verify all required mechanical installation work is successfully completed, and all HVAC equipment is working correctly (or will be by the time the PVT is conducted).	V	W	—
		Field Visit	b. Verify HVAC motors operate below full-load amperage ratings.	V	W	—
		Field Visit	c. Verify all required control system components, wiring, and accessories are installed.	V	W	—
		Field Visit	d. Verify the installed control system architecture matches approved drawings.	V	W	—
		Field Visit	e. Verify all control circuits operate at the proper voltage and are free from grounds or faults.	V	W	—
		Field Visit	f. Verify all required surge protection is installed and functions correctly.	V	W	—
		Field Visit	g. Verify the A/C Power Table specified in "CONTROLS SYSTEM OPERATORS MANUALS" is accurate.	V	W	—

KEY = A - Approve, R - Review, W - Witness, RA - Receipt Acknowledge, S - Surveilance Review, V- Verification and Testing, C - Copy, QA - Quality Assurance

System	Sub-Systems	Phase	Elements	ME QC / DOR (Ktr)	FEAD (SIOH)	FEC (PCAS)
System Acceptance (continued)		Field Visit	h. Verify all DDC network communications function properly, including uploading and downloading programming changes.	V	W	—
		Field Visit	i. Using the BACnet protocol analyzer (if provided or required in this specification), verify communications are error free.	V	W	—
		Field Visit	j. Verify each digital controller's programming is backed up.	V	W	—
		Field Visit	k. Verify all wiring, components, and panels are properly labeled.	V	W	—
		Field Visit	l. Verify all required points are programmed into devices.	V	W	—
		Field Visit	m. Verify all TAB work affecting controls is complete.	V	W	—
		Field Visit	n. Verify all valve and actuator zero and span adjustments are set properly.	V	W	—
		Field Visit	o. Verify all sensor readings are accurate and calibrated.	V	W	—
		Field Visit	p. Verify each control valve and actuator goes to normal position upon loss of power.	V	W	—
		Field Visit	q. Verify all control loops are tuned for smooth and stable operation. View trend data where applicable.	V	W	—
		Field Visit	r. Verify each controller works properly in stand-alone mode.	V	W	—
		Field Visit	s. Verify all safety controls and devices function properly, including interfaces with building fire alarm systems.	V	W	—
		Field Visit	t. Verify all electrical interlocks work properly.	V	W	—
		Field Visit	u. Verify all workstations, notebooks and maintenance personnel interface tools are delivered, all system and database software is installed, and graphic pages are created for each workstation and notebook. Notify the Government when phone lines or netw	V	W	—
		Field Visit	v. Verify the as-built (shop) control drawings are completed.	V	W	—
	ACATS - Testing	Field Visit	Field testing of components	V	W	—
		Field Visit	Field testing of programming	V	W	—
		Field Visit	Pre-performance verification testing	V	W	—
	ACATS - Acceptance Testing	Field Visit	Performance verification testing	V	W	W
		Field Visit	Performance verification re-resting	V	W	W

ROOFING ROLES and RESPONSIBILITIES

System	Sub-Systems	Phase	Elements	Roof QC / DOR (Ktr)	FEAD (SIOH)	FEC (PCAS)
Roofing	**Low Sloped Roofs**	Design Guidance	Post Award Kick Off Meeting		S	A
		Design Guidance	Verify Roof Design Assurance	A	R	S
		Submittal Process	Review Shop Drawings	A	S	S
		Submittal Process	Review Manufacturer's Product Data Sheets	A	S	S
		Submittal Process	Review Design Data (to include wind and fire resistance)	A	S	S
		Submittal Process	Review Test Reports	A	S	S
		Submittal Process	Review Certificates	A	S	S
		Submittal Process	Review Sample Roof Warranty	A	S	C
		Field Visit	Conduct Pre Roofing Conference	V	S	S
		Field Visit	Review Delivery, Storage, and Handling	A	S	S
		Field Visit	Verify Conditions for roof application	A	S	S
		Field Visit	Verify Preparation	A	S	S
		Field Visit	Verify Application	A	S	S
		Field Visit	Verify Protection of Applied Roofing	A	S	S
		Field Visit	Verify Field Quality Control	A	S	S
		Field Visit	Verify Operation Maintenance and Support Information (Roof Warranty and Information Card)	A	S	S
	Steep Sloped Roofs	Design Guidance	Post Award Kick Off Meeting		S	A
		Design Guidance	Verify Roof Design Assurance	A	R	S
		Submittal Process	Review Shop Drawings	A	S	S
		Submittal Process	Review Manufacturer's Product Data Sheets	A	S	S
		Submittal Process	Review Design Data (to include wind and fire resistance)	A	S	S
		Submittal Process	Review Test Reports	A	S	S
		Submittal Process	Review Certificates	A	S	S
		Submittal Process	Review Sample Roof Warranty	A	S	C
		Field Visit	Conduct Pre Roofing Conference	V	S	S
		Field Visit	Review Delivery, Storage, and Handling	A	S	S
		Field Visit	Verify Conditions for roof application	A	S	S
		Field Visit	Verify Preparation	A	S	S
		Field Visit	Verify Application	A	S	S
		Field Visit	Verify Protection of Applied Roofing	A	S	S
		Field Visit	Verify Field Quality Control	A	S	S
		Field Visit	Verify Operation Maintenance and Support Information (Roof Warranty and Information Card)	A	S	S

KEY = A - Approve, R - Review, W - Witness, RA - Receipt Acknowledge, S - Surveilance Review, V- Verification and Testing, C - Copy, QA - Quality Assurance

UNDERWATER STRUCTURES ROLES and RESPONSIBILITIES

System	Sub-Systems	Phase	Elements	UW QC / DOR (Ktr)	FEAD (SIOH)	FEC/NF ESC (PCAS)
Waterfront Structure H10 (Uniformat II) - Substructure H1010	**Pile Foundations (H101001) Sheet Piles (H101001) Caissons (H101001) Cofferdams (H101001) Wraps and Encasements (H101001) Sheet Pile Bulheads (H101003) Gravity Walls (H101003) Block Walls (H101003) Seawalls (H101006) Boat Ramps (H101007) Cut-Off Walls (H101008) Wave Attenuation Walls (H101009) Fender Piles (H104001) Dolphins (H104004)**	Submittal Process	Shop Drawings	A	C	S
		Submittal Process	Manufacturer's Data Sheets	A	C	S
		Submittal Process	Pile driving records	A	C	S
		Submittal Process	Concrete testing: petrographic, chemical, service-life modeling	A	C	S
		Submittal Process	As-built drawings, 3D AUTOCAD format	A	C	S
		Field Visit	Validate in-water/underwater structure complies with RFP requirements, e.g., number, location, size, etc.	A	—	W
		Field Visit	Inspect in-water prestressed/precast concrete piles or sheetpiles for alignment, spalls, cracks, damages, defects, lifting hoops cut/area patched, exposed steel ties, penetrations, etc.	A	—	W
		Field Visit	Inspect in-water cast-in-place concrete drilled caissons for alignment, spalls, cracks, damages, defects, concrete quality (hardness), honeycombing, etc.	A	—	W
		Field Visit	Inspect in-water steel piles and/or p/c p/s concrete sheetpiles for alignment, damage/buckling, coating damage, penetrations, gaps, etc.	A	—	W
		Field Visit	Inspect underwater concrete placement for defects such as honeycombing, concrete quality (hardness)	A	—	W
		Field Visit	Inspect underwater slope protection for conformance with RFP requirements such as rock/boulder size, placement gap limits, angle, location (e.g., toe of slope protection), consistency, etc.	A	—	W
		Field Visit	Inspect underwater Cathodic Protection anodes and connections	A	—	W
		Field Visit	Inspect for underwater debris, existing or by construction.	A	—	W
		Field Visit	Validate in-water/underwater structure complies with RFP requirements, e.g., number, location, size, etc.	A	—	W
		Field Visit	Validate in-water/underwater structure complies with RFP requirements, e.g., number, location, size, etc.	A	—	W
		Field Visit	Validate in-water/underwater structure complies with RFP requirements, e.g., number, location, size, etc.	A	—	W

KEY = A - Approve, R - Review, W - Witness, RA - Receipt Acknowledge, S - Surveilance Review, V- Verification and Testing, C - Copy, QA - Quality Assurance

UNDERWATER STRUCTURES ROLES and RESPONSIBILITIES

System	Sub-Systems	Phase	Elements	UW QC / DOR (Ktr)	FEAD (SIOH)	FEC/NFESC (PCAS)
Underwater Cables	**All**	Submittal Process	Shop Drawings	A	C	S
		Submittal Process	Manufacturer's Data Sheets	A	C	S
		Field Visit	Validate in-water/underwater cable complies with RFP requirements, e.g., number, location, size, etc.	A	—	W
		Field Visit	Inspect underwater cable for defects/damages, kinks, missing anchors, coating damage, etc.	A	—	W
		Field Visit	Inspect for underwater debris, existing or by construction.	A	—	W
Underwater Utility Pipes and Conduits	**All**	Submittal Process	Shop Drawings	A	C	S
		Submittal Process	Manufacturer's Data Sheets	A	C	S
		Field Visit	Validate in-water/underwater component complies with RFP requirements, e.g., number, location, size, etc.	A	—	W
		Field Visit	Inspect underwater component for defects/damages, cracks, missing anchors, coating damage, etc.	A	—	W
		Field Visit	Inspect for underwater debris, existing or by construction.	A	—	W

KEY = A - Approve, R - Review, W - Witness, RA - Receipt Acknowledge, S - Surveilance Review, V- Verification and Testing, C - Copy, QA - Quality Assurance

DEFINITIONS

Approve	(A)	Professional or quality control endorsement of the submittal or installed system meets the contract requirements
Review	(R)	To confirm accuracy of the submittal and that it meets contract requirements
Witness	(W)	Observe demonstration of system performance for acceptance
Receipt **A**cknowledge	(RA)	Confirm receipt of submittal with no review necessary
Surveillance Review	(S)	A quality assurance review based on risk, complexity, and workload
Performance **V**erification and Acceptance Testing	(V)	A demonstration of satisfactory construction and system performance
Receive **C**opy of Correspondence	(C)	Receive a copy of the transmittal sheet and/or correspondence letter
Quality **A**ssurance Inspection	(QA)	Witnessing satisfactory performance without testing all devices or visual inspection of various parts of the system

SECTION 01 50 00

TEMPORARY CONSTRUCTION FACILITIES AND CONTROLS
09/14

PART 1 GENERAL

1.1 SUMMARY

Requirements of this Section apply to, and are a component of, each section of the specifications.

1.2 REFERENCES

The publications listed below form a part of this specification to the extent referenced. The publications are referred to within the text by the basic designation only.

AMERICAN WATER WORKS ASSOCIATION (AWWA)

AWWA C511	(2007) Standard for Reduced-Pressure Principle Backflow Prevention Assembly

FOUNDATION FOR CROSS-CONNECTION CONTROL AND HYDRAULIC RESEARCH (FCCCHR)

FCCCHR List	(continuously updated) List of Approved Backflow Prevention Assemblies
FCCCHR Manual	(10th Edition) Manual of Cross-Connection Control

NATIONAL FIRE PROTECTION ASSOCIATION (NFPA)

NFPA 241	(2013) Standard for Safeguarding Construction,Alteration, and Demolition Operations
NFPA 70	(2014; AMD 1 2013; Errata 1 2013; AMD 2 2013; Errata 2 2013; AMD 3 2014; Errata 3-4 2014; AMD 4-6 2014) National Electrical Code

U.S. FEDERAL AVIATION ADMINISTRATION (FAA)

FAA AC 70/7460-1	(2007; Rev K) Obstruction Marking and Lighting

U.S. FEDERAL HIGHWAY ADMINISTRATION (FHWA)

MUTCD	(2009) Manual on Uniform Traffic Control Devices

1.3 SUBMITTALS

Government approval is required for submittals with a "G" designation; submittals not having a "G" designation are for Contractor Quality Control approval. Submit the following in accordance with Section 01 33 00

SUBMITTAL PROCEDURES:

SD-01 Preconstruction Submittals

Traffic control plan; G

Construction site plan; G

SD-06 Test Reports

Backflow Preventer Tests; G

SD-07 Certificates

Backflow Tester Certification; G

Backflow Preventers Certificate of Full Approval

1.4 CONSTRUCTION SITE PLAN

Prior to the start of work, submit a site plan showing the locations and dimensions of temporary facilities (including layouts and details, equipment and material storage area (onsite and offsite), and access and haul routes, avenues of ingress/egress to the fenced area and details of the fence installation. Identify any areas which may have to be graveled to prevent the tracking of mud. Indicate if the use of a supplemental or other staging area is desired. Show locations of safety and construction fences, site trailers, construction entrances, trash dumpsters, temporary sanitary facilities, and worker parking areas.

1.5 BACKFLOW PREVENTERS CERTIFICATE

Certificate of Full Approval from FCCCHR List, University of Southern California, attesting that the design, size and make of each backflow preventer has satisfactorily passed the complete sequence of performance testing and evaluation for the respective level of approval. Certificate of Provisional Approval will not be acceptable.

1.5.1 Backflow Tester Certificate

Prior to testing, submit to the Contracting Officer certification issued by the State or local regulatory agency attesting that the backflow tester has successfully completed a certification course sponsored by the regulatory agency. Tester must not be affiliated with any company participating in any other phase of this Contract.

1.5.2 Backflow Prevention Training Certificate

Submit a certificate recognized by the State or local authority that states the Contractor has completed at least 10 hours of training in backflow preventer installations. The certificate must be current.

PART 2 PRODUCTS

2.1 TEMPORARY SIGNAGE

2.1.1 Bulletin Board

Immediately upon beginning of work, provide a weatherproof glass-covered

bulletin board not less than 36 by 48 inches in size for displaying the Equal Employment Opportunity poster, a copy of the wage decision contained in the contract, Wage Rate Information poster, and other information approved by the Contracting Officer. Locate the bulletin board at the project site in a conspicuous place easily accessible to all employees, as approved by the Contracting Officer.

2.1.2 Project and Safety Signs

The requirements for the signs, their content, and location are as specified in Section 01 58 00 PROJECT IDENTIFICATION. Erect signs within 15 days after receipt of the notice to proceed. Correct the data required by the safety sign daily, with light colored metallic or non-metallic numerals.

2.2 TEMPORARY TRAFFIC CONTROL

2.2.1 Haul Roads

At contractor's expense construct access and haul roads necessary for proper prosecution of the work under this contract. Construct with suitable grades and widths; sharp curves, blind corners, and dangerous cross traffic are to be avoided. Provide necessary lighting, signs, barricades, and distinctive markings for the safe movement of traffic. The method of dust control, although optional, must be adequate to ensure safe operation at all times. Location, grade, width, and alignment of construction and hauling roads are subject to approval by the Contracting Officer. Lighting must be adequate to assure full and clear visibility for full width of haul road and work areas during any night work operations.

2.2.2 Barricades

Erect and maintain temporary barricades to limit public access to hazardous areas. Whenever safe public access to paved areas such as roads, parking areas or sidewalks is prevented by construction activities or as otherwise necessary to ensure the safety of both pedestrian and vehicular traffic barricades will be required. Securely place barricades clearly visible with adequate illumination to provide sufficient visual warning of the hazard during both day and night.

2.2.3 Fencing

a. Provide fencing along the construction site at all open excavations and tunnels to control access by unauthorized people. Fencing must be installed to be able to restrain a force of at least 250 pounds against it.

b. In addition, prior to the start of work, enclose the construction site with a temporary safety fence. The safety fence shall be bright orange, shall be made of high density polyethylene grid or approved equal or plastic fence from recovered materials containing 60-100 percent recovered content level plastic, a minimum of 42 inches high, supported and tightly secured to steel posts located on minimum 10 foot centers. Remove the fence from the work site upon completion of the contract.

2.2.4 Temporary Wiring

Provide temporary wiring in accordance with NFPA 241 and NFPA 70, Article

305-6(b), Assured Equipment Grounding Conductor Program. Include frequent inspection of all equipment and apparatus.

2.2.5 Backflow Preventers

Reduced pressure principle type conforming to the applicable requirements AWWA C511. Provide backflow preventers complete with 150 pound flanged cast iron, mounted gate valve and strainer, 304 stainless steel or bronze, internal parts. The particular make, model/design, and size of backflow preventers to be installed must be included in the latest edition of the List of Approved Backflow Prevention Assemblies issued by the FCCCHR List and be accompanied by a Certificate of Full Approval from FCCCHR List. After installation conduct Backflow Preventer Tests and provide test reports verifying that the installation meets the FCCCHR Manual Standards.

PART 3 EXECUTION

3.1 EMPLOYEE PARKING

Contractor employees will park privately owned vehicles in an area designated by the Contracting Officer. This area will be within reasonable walking distance of the construction site. Contractor employee parking must not interfere with existing and established parking requirements of the government installation.

3.2 AVAILABILITY AND USE OF UTILITY SERVICES

3.2.1 Temporary Utilities

Provide temporary utilities required for construction. Materials may be new or used, must be adequate for the required usage, not create unsafe conditions, and not violate applicable codes and standards.

3.2.2 Utilities at Special Locations

a. Reasonable amounts of utilities will be made available to the Contractor at the prevailing Government rates and may be obtained upon application to the Base Maintenance Officer, Bldg. 1202, Marine Corps Base, Camp Lejeune. A refundable security deposit to the Officer in Charge of Construction shall be made prior to application for services. Provide transformers, meter bases, electrical service poles and drops for electrical services, and backflow preventer devices on connections to domestic water lines. Final taps and tie-ins to the Government utility grid will be made by Base Maintenance who will also provide and seal a 120 or 208 volt, three-wire kWh meter. Tap-in cost, if any, shall be the responsibility of the Contractor. Tampering or movement of a sealed meter without notification to base maintenance is grounds for discontinuance of electrical service. Provide larger meters required if they are not available from the Government. The Contractor is responsible for the cost of utility services required until the date of Government acceptance. Under no circumstances will taps to base fire hydrants be allowed for obtaining domestic water.

3.2.3 Sanitation

a. Provide and maintain within the construction area minimum field-type sanitary facilities approved by the Contracting Officer and periodically empty wastes into a municipal, district, or station sanitary sewage system, or remove waste to a commercial facility.

Obtain approval from the system owner prior to discharge into any municipal, district, or commercial sanitary sewer system. Any penalties and / or fines associated with improper discharge will be the responsibility of the Contractor. Coordinate with the Contracting Officer and follow station regulations and procedures when discharging into the station sanitary sewer system. Maintain these conveniences at all times without nuisance. Include provisions for pest control and elimination of odors. Government toilet facilities will not be available to Contractor's personnel.

3.2.4 Telephone

Make arrangements and pay all costs for telephone facilities desired.

3.2.5 Obstruction Lighting of Cranes

Provide a minimum of 2 aviation red or high intensity white obstruction lights on temporary structures (including cranes) over 100 feet above ground level. Light construction and installation must comply with FAA AC 70/7460-1. Lights must be operational during periods of reduced visibility, darkness, and as directed by the Contracting Officer.

3.2.6 Fire Protection

Provide temporary fire protection equipment for the protection of personnel and property during construction. Remove debris and flammable materials daily to minimize potential hazards.

3.2.7 Location of Underground Utilities

See specification section 01 35 26 GOVERNMENTAL SAFETY REQUIREMENTS paragraph "Location of Underground Utilities".

3.3 TRAFFIC PROVISIONS

3.3.1 Maintenance of Traffic

a. Conduct operations in a manner that will not close any thoroughfare or interfere in any way with traffic on railways or highways except with written permission of the Contracting Officer at least 15 calendar days prior to the proposed modification date, and provide a Traffic Control Plan detailing the proposed controls to traffic movement for approval. The plan must be in accordance with State and local regulations and the MUTCD, Part VI. Contractor may move oversized and slow-moving vehicles to the worksite provided requirements of the highway authority have been met.

b. Conduct work so as to minimize obstruction of traffic, and maintain traffic on at least half of the roadway width at all times. Obtain approval from the Contracting Officer prior to starting any activity that will obstruct traffic.

c. Provide, erect, and maintain, at contractors expense, lights, barriers, signals, passageways, detours, and other items, that may be required by the Life Safety Signage, overhead protection authority having jurisdiction.

3.3.2 Protection of Traffic

Maintain and protect traffic on all affected roads during the construction period except as otherwise specifically directed by the Contracting Officer. Measures for the protection and diversion of traffic, including the provision of watchmen and flagmen, erection of barricades, placing of lights around and in front of equipment the work, and the erection and maintenance of adequate warning, danger, and direction signs, will be as required by the State and local authorities having jurisdiction. Protect the traveling public from damage to person and property. Minimize the interference with public traffic on roads selected for hauling material to and from the site. Investigate the adequacy of existing roads and their allowable load limit. Contractor is responsible for the repair of any damage to roads caused by construction operations.

3.3.3 Rush Hour Restrictions

Do not interfere with the peak traffic flows preceding and during normal operations without notification to and approval by the Contracting Officer.

3.3.4 Dust Control

Dust control methods and procedures must be approved by the Contracting Officer. Treat dust abatement on access roads with applications of calcium chloride, water sprinklers, or similar methods or treatment.

3.4 CONTRACTOR'S TEMPORARY FACILITIES

3.4.1 Safety

Protect the integrity of any installed safety systems or personnel safety devices. If entrance into systems serving safety devices is required, the Contractor must obtain prior approval from the Contracting Officer. If it is temporarily necessary to remove or disable personnel safety devices in order to accomplish contract requirements, provide alternative means of protection prior to removing or disabling any permanently installed safety devices or equipment and obtain approval from the Contracting Officer.

3.4.2 Administrative Field Offices

Provide and maintain administrative field office facilities within the construction area at the designated site. Government office and warehouse facilities will not be available to the Contractor's personnel.

3.4.3 Storage Area

Construct a temporary 6 foot high chain link fence around trailers and materials. Fence posts may be driven, in lieu of concrete bases, where soil conditions permit. Do not place or store Trailers, materials, or equipment outside the fenced area unless such trailers, materials, or equipment are assigned a separate and distinct storage area by the Contracting Officer away from the vicinity of the construction site but within the installation boundaries. Trailers, equipment, or materials must not be open to public view with the exception of those items which are in support of ongoing work on any given day. Do not stockpile materials outside the fence in preparation for the next day's work. Park mobile equipment, such as tractors, wheeled lifting equipment, cranes, trucks, and like equipment within the fenced area at the end of each work day.

3.4.4 Supplemental Storage Area

Upon Contractor's request, the Contracting Officer will designate another or supplemental area for the Contractor's use and storage of trailers, equipment, and materials. This area may not be in close proximity of the construction site but will be within the installation boundaries. Fencing of materials or equipment will not be required at this site; however, the Contractor is responsible for cleanliness and orderliness of the area used and for the security of any material or equipment stored in this area. Utilities will not be provided to this area by the Government.

3.4.5 Appearance of Trailers

a. Trailers utilized by the Contractor for administrative or material storage purposes must present a clean and neat exterior appearance and be in a state of good repair. Trailers which, in the opinion of the Contracting Officer, require exterior painting or maintenance will not be allowed on installation property.

b. Paint using suitable paint materials and maintain the temporary facilities. Failure to do so will be sufficient reason to require their removal.

3.4.6 Maintenance of Storage Area

a. Keep fencing in a state of good repair and proper alignment. Grassed or unpaved areas, which are not established roadways, will be covered with a layer of gravel as necessary to prevent rutting and the tracking of mud onto paved or established roadways, should the Contractor elect to traverse them with construction equipment or other vehicles; gravel gradation will be at the Contractor's discretion. Mow and maintain grass located within the boundaries of the construction site for the duration of the project. Grass and vegetation along fences, buildings, under trailers, and in areas not accessible to mowers will be edged or trimmed neatly.

3.4.7 New Building

In the event a new building is constructed for the temporary project field office, it will be a minimum 12 feet in width, 16 feet in length and have a minimum of 7 feet headroom. Equip the building with approved electrical wiring, at least one double convenience outlet and the required switches and fuses to provide 110-120 volt power. Provide a work table with stool, desk with chair, two additional chairs, and one legal size file cabinet that can be locked. The building must be waterproof, supplied with a heater, have a minimum of two doors, electric lights, a telephone, a battery operated smoke detector alarm, a sufficient number of adjustable windows for adequate light and ventilation, and a supply of approved drinking water. Approved sanitary facilities must be furnished. Screen the windows and doors and provide the doors with dead bolt type locking devices or a padlock and heavy duty hasp bolted to the door. Door hinge pins will be non-removable. Arrange the windows to open and to be securely fastened from the inside. Protect glass panels in windows by bars or heavy mesh screens to prevent easy access. In warm weather, furnish air conditioning capable of maintaining the office at 50 percent relative humidity and a room temperature 20 degrees F below the outside temperature when the outside temperature is 95 degrees F. Any new building erected for a temporary field office must be maintained by the Contractor during the life of the contract and upon completion and acceptance of the work become

the property of the Contractor and removed from the site. All charges for telephone service for the temporary field office will be borne by the Contractor, including long distance charges up to a maximum of $75.00 per month.

3.4.8 Security Provisions

Provide adequate outside security lighting at the Contractor's temporary facilities. The Contractor will be responsible for the security of its own equipment; in addition, the Contractor will notify the appropriate law enforcement agency requesting periodic security checks of the temporary project field office.

3.4.9 Storage Size and Location

The open site available for storage must be as indicated by the Contracting Officer. The storage area will be approximately 5,000 square feet.

3.4.10 Weather Protection of Temporary Facilities and Stored Materials

Take necessary precautions to ensure that roof openings and other critical openings in the building are monitored carefully. Take immediate actions required to seal off such openings when rain or other detrimental weather is imminent, and at the end of each workday. Ensure that the openings are completely sealed off to protect materials and equipment in the building from damage.

3.4.10.1 Building and Site Storm Protection

When a warning of gale force winds is issued, take precautions to minimize danger to persons, and protect the work and nearby Government property. Precautions must include, but are not limited to, closing openings; removing loose materials, tools and equipment from exposed locations; and removing or securing scaffolding and other temporary work. Close openings in the work when storms of lesser intensity pose a threat to the work or any nearby Government property.

3.4.10.2 Hurricane Condition of Readiness

Unless directed otherwise, comply with:

a. Condition FOUR (Sustained winds of 50 knots or greater expected within 72 hours): Normal daily jobsite cleanup and good housekeeping practices. Collect and store in piles or containers scrap lumber, waste material, and rubbish for removal and disposal at the close of each work day. Maintain the construction site including storage areas, free of accumulation of debris. Stack form lumber in neat piles less than 4 feet high. Remove all debris, trash, or objects that could become missile hazards. Contact Contracting Officer for Condition of Readiness (COR) updates and completion of required actions.

b. Condition THREE (Sustained winds of 50 knots or greater expected within 48 hours): Maintain "Condition FOUR" requirements and commence securing operations necessary for "Condition ONE" which cannot be completed within 18 hours. Cease all routine activities which might interfere with securing operations. Commence securing and stow all gear and portable equipment. Make preparations for securing buildings. Review requirements pertaining to "Condition TWO" and continue action as necessary to attain "Condition THREE" readiness.

Contact Contracting Officer for weather and COR updates and completion of required actions.

c. Condition TWO (Sustained winds of 50 knots or greater expected within 24 hours): Curtail or cease routine activities until securing operation is complete. Reinforce or remove form work and scaffolding. Secure machinery, tools, equipment, materials, or remove from the jobsite. Expend every effort to clear all missile hazards and loose equipment from general base areas. Contact Contracting Officer for weather and Condition of Readiness (COR) updates and completion of required actions.

d. Condition ONE. (Sustained winds of 50 knots or greater expected within 12 hours): Secure the jobsite, and leave Government premises.

3.5 GOVERNMENT FIELD OFFICE

3.5.1 Quality Control Manager Records and Field Office

Provide on the jobsite an office with approximately 100 square feet of useful floor area for the exclusive use of the QC Manager. Provide a weathertight structure with adequate heating and cooling, toilet facilities, lighting, ventilation, a 4 by 8 foot plan table, a standard size office desk and chair, computer station, and working communications facilities. Provide either a 1,500 watt radiant heater and a window-mounted air conditioner rated at 9,000 Btus minimum or a window-mounted heat pump of the same minimum heating and cooling ratings. Provide a door with a cylinder lock and windows with locking hardware. Make utility connections. Locate as directed. File quality control records in the office and make available at all times to the Government. After completion of the work, remove the entire structure from the site.

3.5.2 Trailer-Type Mobile Office

The Contractor may, at its option, furnish and maintain a trailer-type mobile office acceptable to the Contracting Officer and providing as a minimum the facilities specified above. Securely anchor the trailer to the ground at all four corners to guard against movement during high winds.

3.6 PLANT COMMUNICATION

Whenever the Contractor has the individual elements of its plant so located that operation by normal voice between these elements is not satisfactory, the Contractor must install a satisfactory means of communication, such as telephone or other suitable devices and made available for use by Government personnel.

3.7 TEMPORARY PROJECT SAFETY FENCING

As soon as practicable, but not later than 15 days after the date established for commencement of work, furnish and erect temporary project safety fencing at the work site. The safety fencing must be a high visibility orange colored, high density polyethylene grid or approved equal, a minimum of 42 inches high, supported and tightly secured to steel posts located on maximum 10 foot centers, constructed at the approved location. Maintain the safety fencing during the life of the contract and, upon completion and acceptance of the work, will become the property of the Contractor and be removed from the work site.

3.8 CLEANUP

Remove construction debris, waste materials, packaging material and the like from the work site daily. Any dirt or mud which is tracked onto paved or surfaced roadways must be cleaned away. Store within the fenced area described above or at the supplemental storage area any materials resulting from demolition activities which are salvageable. Neatly stacked stored materials not in trailers, whether new or salvaged.

3.9 RESTORATION OF STORAGE AREA

Upon completion of the project remove the bulletinboard, signs, barricades, haulroads, and any other temporary products from the site. After removal of trailers, materials, and equipment from within the fenced area, remove the fence that will become the property of the Contractor. Restore to the original or better condition, areas used by the Contractor for the storage of equipment or material, or other use. Gravel used to traverse grassed areas must be removed and the area restored to its original condition, including top soil and seeding as necessary.

-- End of Section --

SECTION 01 57 13.00 22

EROSION AND SEDIMENT CONTROL
09/14

PART 1 GENERAL

1.1 REFERENCES

The publications listed below form a part of this specification to the extent referenced. The publications are referred to in the text by the basic designation only.

ASTM INTERNATIONAL (ASTM)

ASTM D3787	(2007; R 2011) Bursting Strength of Textiles - Constant-Rate-of-Traverse (CRT), Ball Burst Test
ASTM D4533	(2011) Trapezoid Tearing Strength of Geotextiles
ASTM D4632	(2008) Grab Breaking Load and Elongation of Geotextiles

NORTH CAROLINA SEDIMENT CONTROL COMMISSION (NCSCC)

NCSCC ESCM	(2006; R 2013) Erosion and Sediment Control Planning and Design Manual

1.2 DESCRIPTION OF WORK

The work includes the provision of temporary and permanent erosion control measures to prevent the pollution of air, water, and land within the project limits and in areas outside the project limits where work is accomplished in conjunction with the project.

1.3 SUBMITTALS

Government approval is required for submittals with a "G" designation; submittals not having a "G" designation are for Contractor Quality Control approval. Submit the following in accordance with Section 01 33 00 SUBMITTAL PROCEDURES:

SD-01 Preconstruction Submittals

Construction Sequence Schedule; G

SD-03 Product Data

Sediment Fence

Dust Suppressors

Erosion Control Matting

Filter Fabric

1.4 CONSTRUCTION SEQUENCE SCHEDULE

Submit a Contractor furnished construction work sequence schedule, a minimum of 30 days prior to start of construction. The work schedule shall coordinate the timing of land disturbing activities with the provision of erosion control measures to reduce on site erosion and off site sedimentation. Installation of temporary erosion control features shall be coordinated with the construction of permanent erosion control features to assure effective and continuous control of erosion and pollution.

1.5 STATE APPROVED PLAN

The erosion control plan indicated has been approved by the State. No additional State review and approval of the erosion control plan is required, unless the Contractor desires to modify the erosion control plan indicated. Should the Contractor desire to modify the State approved plan, a resubmittal to the State, including the State's approval is required prior to the start of construction. The contractor shall be responsible for any additional costs and time incurred as a result of the resubmittal of the previously approved erosion control plan. The contractor shall anticipate a minimum 45 day review period by the State. Provide and maintain erosion control measures in accordance with NCSCC ESCM, and as specified herein.

PART 2 PRODUCTS

2.1 SEDIMENT FENCE

2.1.1 State Standard Sediment Fence

NCSCC ESCM Standard 6.62, sediment fence (maximum height of 18 inches).

2.2 SILT FENCE DROP INLET PROTECTION

2.2.1 State Standard Drop Inlet Protection

NCSCC ESCM Standard 6.51, using silt fencing.

2.3 CONSTRUCTION ENTRANCE

2.3.1 State Standard Construction Entrance

2.3.1.1 Aggregate

NCSCC ESCM, Standard 6.06.

2.3.1.2 Filter Fabric

A woven or nonwoven polypropylene, nylon, or polyester containing stabilizers and/or inhibitors to make the fabric resistant to deterioration from ultraviolet, and with the following properties:

a. Minimum grab tensile strength (TF 25 #1/ASTM D4632) 180 pounds

b. Minimum Puncture (TF 25 #4/ASTM D3787) 75 psi in the weakest direction

c. Apparent Opening Size 40-80 (U.S. Sieve Size)

d. Minimum Trapezoidal tear strength (TF 25 #2/ASTM D4533) 50 pounds

2.4 DUST SUPPRESSORS

Calcium chloride, or other standard manufacturer's spray on adhesives designed for dust suppression.

2.5 TEMPORARY SEEDING

2.5.1 State Standard Temporary Seeding

Provide seed, lime, fertilizer, and mulch in accordance with NCSCC ESCM, Standards 6.10 and 6.14. Provide hay or straw mulch.

2.6 EROSION CONTROL MATTING

Jute, excelsior, or paper matting that has not been bleached or dyed. Provide matting in minimum 4 feet widths. Staples for anchoring the matting shall be minimum 11 gage wire, formed into a "U" shape with a minimum throat width of one inch and minimum length of 6 inches after forming.

2.6.1 Jute Matting

A uniform open plain weave of single jute yarn providing an average weight of 0.9 pounds per square yard of matting. Yarn shall be of a loosely twisted construction and shall not vary in thickness by more than one-half its normal diameter. Matting shall have openings between strands length wise of 0.45 to 0.75 inch, and between strands crosswise of 0.67 to 1.13 inch.

2.6.2 Excelsior Matting

A machine produced mat of wood excelsior with a minimum of 80 percent of wood fibers 6 inches in length or longer. The matting shall have an average weight of 0.75 to 0.85 pounds per square yard with an even fiber distribution producing a consistent mat thickness, and shall have on one side a woven fabric. The woven fabric shall be twisted paper cord, cotton cord, or an extruded plastic mesh with a minimum mesh size of one by one inch and a maximum mesh size of 1 1/2 by 3 inch.

2.6.3 Paper Matting

Shall be a knitted polypropylene yarn with uniform openings with biodegradable paper strips continuously interwoven. The matting shall weigh a minimum of 0.09 pounds per square yard with maximum openings of 3/4 inch and minimum openings of 1/2 inch.

2.6.4 Straw Matting

A machine produced straw mat with a minimum thickness of 1/2 inch +/- 1/8 inch. The straw shall be evenly distributed throughout the mat to provide a minimum average dry weight of .70 pounds per square yard. The topside of the mat shall be covered with a 3/8 inch biodegradable plastic mesh, with the mesh attached to the straw by a knitting process using biodegradable thread.

PART 3 EXECUTION

3.1 CONSTRUCTION SEQUENCE SCHEDULE

Stabilize areas for construction access immediately with gravel. Install principal sediment basins and traps before any major site grading takes place. Provide additional sediment traps, and sediment fences as grading progresses. Provide drop inlet protection around existing drainage structures, and inlet and outlet protection at the ends of new drainage systems. Stabilize graded and disturbed areas immediately after grading. Permanent stabilization shall be provided immediately on areas that have been final graded. Temporary seeding and mulching shall be provided on disturbed areas as specified in the paragraph entitled "Temporary Seeding." Installation of temporary erosion control features shall be coordinated with the construction of permanent erosion control features to assure effective and continuous control of erosion and sediment deposition. **Remove temporary erosion control measures at the end of construction and provide permanent seeding.**

3.2 SEDIMENT FENCES

Install posts at the spacing indicated, and at an angle between 2 degrees and 20 degrees towards the potential silt load area. Sediment fence height shall be approximately 18 inches. Do not attach filter fabric to existing trees. Secure filter fabric to the post and wire fabric using staples, tie wire, or hog rings. Imbed the filter fabric into the ground as indicated. Splice filter fabric at support pole using a 6 inch overlap and securely seal.

3.3 DROP INLET PROTECTION

Provide stakes evenly spaced around the perimeter of the drop inlet, a maximum of 3 feet apart. Stakes shall be driven immediately adjacent to the drainage structure, a minimum of 18 inches into the ground. The fabric shall be securely fastened to the outside of the stakes, with the bottom of the fabric placed into a trench and backfilled.

3.4 CURB INLET PROTECTION

Provide wire mesh over the curb inlet opening so at least 12 inches of wire mesh extends across the inlet cover and at least 12 inches of wire mesh extends across the gutter from the inlet opening, as indicated. Place stone on wire mesh against curb inlet.

3.5 CONSTRUCTION ENTRANCE

Provide as indicated, a minimum of 6 inches thick, at points of vehicular ingress and egress on the construction site. Construction entrances shall be cleared and grubbed, and then excavated a minimum of 3 inches prior to placement of the filter fabric and aggregate. The aggregate shall be placed in a manner that will prevent damage and movement of the fabric. Place fabric in one piece, where possible. Overlap fabric joints a minimum of 12 inches.

3.6 DUST SUPPRESSORS

Immediately dampen the surface before calcium chloride application. Apply dust suppressors on unsurfaced base, subbase and other unsurfaced travel ways. Apply calcium chloride at the rate of 1.0 to 1.25 pounds per square

yard of surface for pellets for the initial application. For subsequent applications of calcium chloride, application rates may be approximately 75 percent of initial application rates. Do not apply when raining or the moisture conditions exceed that required for proper application. Apply other dust suppressors in accordance with manufacturer's instructions. Protect treated surfaces from traffic for a minimum of 2 hours after treatment. Repeat application of dust suppressors as required to control dust emissions.

3.7 TEMPORARY SEEDING

3.7.1 Time Restrictions

Within 48 hours after attaining the grading increment specified herein, provide seed, fertilizer, mulch and water on graded areas when any of the following conditions occur:

a. Grading operations stop for an anticipated duration of 30 days or more.

b. When it is impossible or impractical to bring an area to finish grade so that permanent seeding operations can be performed without serious disturbance from additional grading.

c. Grading operations for a specific area are completed and the seeding seasons specified for permanent sod in Section 32 92 23 SODDING is more than 30 days away.

d. When an immediate cover is required to minimize erosion, or when erosion has occurred.

e. Provide on erosion control devices constructed using soil materials.

3.7.2 Seeding Requirements

3.7.2.1 State Standard Seeding Requirements

Provide seed, lime, fertilizer, and mulch in accordance with NCSCC ESCM, Standard 6.10 and 6.14. Provide hay or straw mulch in an air dried condition, and secure mulch in place.

3.7.2.2 Permanent Seeding

Temporary seeding shall be removed, and permanent sod shall be provided during the specified planting season as specified in Section 32 92 23 SODDING.

3.8 EROSION CONTROL MATTING

Place matting in the direction of the flow of water. The up channel mat ting end shall be toed in a narrow trench a minimum of 5 inches deep. Where one roll of matting ends and a second roll begins, the end of the upper roll shall be brought over the buried end of the second roll, to provide a 6 inch overlap. Where matting widths are laid side by side, the overlap between matting shall be 4 inches. Provide check slots every 50 feet longitudinally in the matting. Construct check slots by providing a narrow trench 5 inches deep and folding the matting down in to the trench, across the bottom of the trench, and then back up the trench to the existing ground Backfill and compact the trench using the excavated material from the trench. Staple matting ends, junctions, and check slots

at 10 inches on center. Staple matting outer edges and overlaps and the center of each matting strip at 3 feet on center. Install excelsior matting with the woven fabric on top.

3.9 MAINTENANCE AND INSPECTION

Inspect erosion control devices after each rainfall and daily during pro longed rainfall. Remove sediment deposits after each rainfall or when sediment reaches approximately one-half the barrier height. Immediately repair damaged erosion control devices and damaged areas around and underneath the devices. Maintain erosion control devices to assure continued performance of their intended function. Modify the erosion control plan as required to control problem areas noticed after each inspection. Modifications shall be approved by the Contracting Officer.

3.10 CLEAN UP

At the completion of the job, or when directed or approved by the Contracting Officer, temporary erosion control devices shall be removed. Erosion control devices and areas immediately adjacent to the device shall be filled (where applicable), shaped to drain and to blend into the surrounding contours, and provided with permanent seeding. Erosion control devices may remain in place after job completion when approved by the Contracting Officer.

-- End of Section --

SECTION 01 57 19.00 20

TEMPORARY ENVIRONMENTAL CONTROLS
09/14

PART 1 GENERAL

1.1 REFERENCES

The publications listed below form a part of this specification to the extent referenced. The publications are referred to within the text by the basic designation only.

U.S. ENVIRONMENTAL PROTECTION AGENCY (EPA)

EPA 530/F-93/004	(1993; Rev O; Updates I, II, IIA, IIB, and III) Test Methods for Evaluating Solid Waste (Vol IA, IB, IC, and II) (SW-846)
EPA 833-R-060-04	(2007) Developing Your Storm Water Pollution Prevention Plan, a Guide for Construction Sites

U.S. NATIONAL ARCHIVES AND RECORDS ADMINISTRATION (NARA)

29 CFR 1910.120	Hazardous Waste Operations and Emergency Response
40 CFR 112	Oil Pollution Prevention
40 CFR 241	Guidelines for Disposal of Solid Waste
40 CFR 243	Guidelines for the Storage and Collection of Residential, Commercial, and Institutional Solid Waste
40 CFR 258	Subtitle D Landfill Requirements
40 CFR 260	Hazardous Waste Management System: General
40 CFR 261	Identification and Listing of Hazardous Waste
40 CFR 262	Standards Applicable to Generators of Hazardous Waste
40 CFR 263	Standards Applicable to Transporters of Hazardous Waste
40 CFR 264	Standards for Owners and Operators of Hazardous Waste Treatment, Storage, and Disposal Facilities
40 CFR 265	Interim Status Standards for Owners and Operators of Hazardous Waste Treatment, Storage, and Disposal Facilities
40 CFR 266	Standards for the Management of Specific

	Hazardous Wastes and Specific Types of Hazardous Waste Management Facilities
40 CFR 268	Land Disposal Restrictions
40 CFR 270	EPA Administered Permit Programs: The Hazardous Waste Permit Program
40 CFR 271	Requirements for Authorization of State Hazardous Waste Programs
40 CFR 272	Approved State Hazardous Waste Management Programs
40 CFR 273	Standards For Universal Waste Management
40 CFR 279	Standards for the Management of Used Oil
40 CFR 280	Technical Standards and Corrective Action Requirements for Owners and Operators of Underground Storage Tanks (UST)
40 CFR 300	National Oil and Hazardous Substances Pollution Contingency Plan
40 CFR 355	Emergency Planning and Notification
40 CFR 372-SUBPART D	Specific Toxic Chemical Listings
40 CFR 51	Requirements For Preparation, Adoption, And Submittal Of Implementation Plans
40 CFR 52	Approval And Promulgation Of Implementation Plans
40 CFR 60	Standards of Performance for New Stationary Sources
40 CFR 61	National Emission Standards for Hazardous Air Pollutants
40 CFR 63	National Emission Standards for Hazardous Air Pollutants for Source Categories
40 CFR 761	Polychlorinated Biphenyls (PCBs) Manufacturing, Processing, Distribution in Commerce, and Use Prohibitions
40 CFR 82	Protection of Stratospheric Ozone
49 CFR 171	General Information, Regulations, and Definitions
49 CFR 172	Hazardous Materials Table, Special Provisions, Hazardous Materials Communications, Emergency Response Information, and Training Requirements
49 CFR 173	Shippers - General Requirements for

Shipments and Packagings

49 CFR 178 Specifications for Packagings

1.2 DEFINITIONS

1.2.1 Sediment

Soil and other debris that have eroded and have been transported by runoff water or wind.

1.2.2 Solid Waste

Garbage, refuse, debris, sludge, or other discharged material, including solid, liquid, semisolid, or contained gaseous materials resulting from domestic, industrial, commercial, mining, or agricultural operations. Types of solid waste typically generated at construction sites may include:

a. Green waste: The vegetative matter from landscaping, land clearing and grubbing, including, but not limited to, grass, bushes, scrubs, small trees and saplings, tree stumps and plant roots. Marketable trees, grasses and plants that are indicated to remain, be re-located, or be re-used are not included.

b. Surplus soil: Existing soil that is in excess of what is required for this work, including aggregates intended, but not used, for on-site mixing of concrete, mortars and paving. Contaminated soil meeting the definition of hazardous material or hazardous waste is not included.

c. Debris: Non-hazardous solid material generated during the construction, demolition, or renovation of a structure which exceeds 2.5 inch particle size that is: a manufactured object; plant or animal matter; or natural geologic material (e.g. cobbles and boulders), broken or removed concrete, masonry, and rock asphalt paving; ceramics; roofing paper and shingles. Inert materials may be reinforced with or contain ferrous wire, rods, accessories and weldments. A mixture of debris and other material such as soil or sludge is also subject to regulation as debris if the mixture is comprised primarily of debris by volume, based on visual inspection.

d. Wood: Dimension and non-dimension lumber, plywood, chipboard, hardboard. Treated and/or painted wood that meets the definition of lead contaminated or lead based contaminated paint is not included.

e. Scrap metal: Scrap and excess ferrous and non-ferrous metals such as reinforcing steel, structural shapes, pipe and wire that are recovered or collected and disposed of as scrap. Scrap metal meeting the definition of hazardous material or hazardous waste is not included.

f. Paint cans: Metal cans that are empty of paints, solvents, thinners and adhesives. If permitted by the paint can label, a thin dry film may remain in the can.

g. Recyclables: Materials, equipment and assemblies such as doors, windows, door and window frames, plumbing fixtures, glazing and mirrors that are recovered and sold as recyclable. Metal meeting the definition of lead contaminated or lead based paint contaminated may not be included as recyclable if sold to a scrap metal company. Paint cans may not be included as recyclable if sold to a scrap metal company.

h. Hazardous Waste: By definition, to be a hazardous waste a material must first meet the definition of a solid waste. Hazardous waste and hazardous debris are special cases of solid waste. They have additional regulatory controls and must be handled separately. They are thus defined separately in this document.

   Material not regulated as solid waste are: nuclear source or byproduct materials regulated under the Federal Atomic Energy Act of 1954 as amended; suspended or dissolved materials in domestic sewage effluent or irrigation return flows, or other regulated point source discharges; regulated air emissions; and fluids or wastes associated with natural gas or crude oil exploration or production.

1.2.3 Hazardous Debris

As defined in Solid Waste paragraph, debris that contains listed hazardous waste (either on the debris surface, or in its interstices, such as pore structure) per 40 CFR 261; or debris that exhibits a characteristic of hazardous waste per 40 CFR 261.

1.2.4 Chemical Wastes

This includes salts, acids, alkalizes, herbicides, pesticides, and organic chemicals.

1.2.5 Garbage

Refuse and scraps resulting from preparation, cooking, dispensing, and consumption of food.

1.2.6 Hazardous Waste

Any discarded material, liquid, solid, or gas, which meets the definition of hazardous material or is designated hazardous waste by the Environmental Protection Agency or State Hazardous Control Authority as defined in 40 CFR 260, 40 CFR 261, 40 CFR 262, 40 CFR 263, 40 CFR 264, 40 CFR 265, 40 CFR 266, 40 CFR 268, 40 CFR 270, 40 CFR 271, 40 CFR 272, 40 CFR 273, 40 CFR 279, and 40 CFR 280.

1.2.7 Hazardous Materials

Hazardous materials as defined in 49 CFR 171 and listed in 49 CFR 172.

Hazardous material is any material that:

a. Is regulated as a hazardous material per 49 CFR 173, or

b. Requires a Material Safety Data Sheet (MSDS) per 29 CFR 1910.120, or

c. During end use, treatment, handling, packaging, storage, transpiration, or disposal meets or has components that meet or have potential to meet the definition of a hazardous waste as defined by 40 CFR 261 Subparts A, B, C, or D.

Designation of a material by this definition, when separately regulated or controlled by other instructions or directives, does not eliminate the need for adherence to that hazard-specific guidance which takes precedence over this instruction for "control" purposes. Such material include ammunition,

weapons, explosive actuated devices, propellants, pyrotechnics, chemical and biological warfare materials, medical and pharmaceutical supplies, medical waste and infectious materials, bulk fuels, radioactive materials, and other materials such as asbestos, mercury, and polychlorinated biphenyls (PCBs). Nonetheless, the exposure may occur incident to manufacture, storage, use and demilitarization of these items.

1.2.8 Waste Hazardous Material (WHM)

Any waste material which because of its quantity, concentration, or physical, chemical, or infectious characteristics may pose a substantial hazard to human health or the environment and which has been so designated. Used oil not containing any hazardous waste, as defined above, falls under this definition.

1.2.9 Oily Waste

Those materials which are, or were, mixed with used oil and have become separated from that used oil. Oily wastes also means materials, including wastewaters, centrifuge solids, filter residues or sludges, bottom sediments, tank bottoms, and sorbents which have come into contact with and have been contaminated by, used oil and may be appropriately tested and discarded in a manner which is in compliance with other State and local requirements.

This definition includes materials such as oily rags, "kitty litter" sorbent clay and organic sorbent material. These materials may be land filled provided that:

a. It is not prohibited in other State regulations or local ordinances

b. The amount generated is "de minimus" (a small amount)

c. It is the result of minor leaks or spills resulting from normal process operations

d. All free-flowing oil has been removed to the practical extent possible

Large quantities of this material, generated as a result of a major spill or in lieu of proper maintenance of the processing equipment, are a solid waste. As a solid waste, a hazardous waste determination must be performed prior to disposal. As this can be an expensive process, it is recommended that this type of waste be minimized through good housekeeping practices and employee education.

1.2.10 Regulated Waste

Those solid waste that have specific additional Federal, state, or local controls for handling, storage, or disposal.

1.2.11 Class I Ozone Depleting Substance (ODS)

Class I ODS is defined in Section 602(a) of The Clean Air Act and includes the following chemicals:

chlorofluorocarbon-11 (CFC-11)
chlorofluorocarbon-12 (CFC-12)
chlorofluorocarbon-13 (CFC-13)
chlorofluorocarbon-111 (CFC-111)

chlorofluorocarbon-112 (CFC-112)
chlorofluorocarbon-113 (CFC-113)
chlorofluorocarbon-114 (CFC-114)
chlorofluorocarbon-115 (CFC-115)
chlorofluorocarbon-211 (CFC-211)
chlorofluorocarbon-212 (CFC-212)
chlorofluorocarbon-213 (CFC-213)
chlorofluorocarbon-214 (CFC-214)
chlorofluorocarbon-215 (CFC-215)
chlorofluorocarbon-216 (CFC-216)
chlorofluorocarbon-217 (CFC-217)
chlorofluorocarbon-500 (CFC-500)
chlorofluorocarbon-502 (CFC-502)
chlorofluorocarbon-503 (CFC-503)
halon-1211
halon-1301
halon-2402
carbon tetrachloride
methyl bromide
methyl chloroform

Class II ODS is defined in Section 602(s) of The Clean Air Act and includes the following chemicals:

hydrochlorofluorocarbon-21 (HCFC-21)
hydrochlorofluorocarbon-22 (HCFC-22)
hydrochlorofluorocarbon-31 (HCFC-31)
hydrochlorofluorocarbon-121 (HCFC-121)
hydrochlorofluorocarbon-122 (HCFC-122)
hydrochlorofluorocarbon-123 (HCFC-123)
hydrochlorofluorocarbon-124 (HCFC-124)
hydrochlorofluorocarbon-131 (HCFC-131)
hydrochlorofluorocarbon-132 (HCFC-132)
hydrochlorofluorocarbon-133 (HCFC-133)
hydrochlorofluorocarbon-141 (HCFC-141)
hydrochlorofluorocarbon-142 (HCFC-142)
hydrochlorofluorocarbon-221 (HCFC-221)
hydrochlorofluorocarbon-222 (HCFC-222)
hydrochlorofluorocarbon-223 (HCFC-223)
hydrochlorofluorocarbon-224 (HCFC-224)
hydrochlorofluorocarbon-225 (HCFC-225)
hydrochlorofluorocarbon-226 (HCFC-226)
hydrochlorofluorocarbon-231 (HCFC-231)
hydrochlorofluorocarbon-232 (HCFC-232)
hydrochlorofluorocarbon-233 (HCFC-233)
hydrochlorofluorocarbon-234 (HCFC-234)
hydrochlorofluorocarbon-235 (HCFC-235)
hydrochlorofluorocarbon-251 (HCFC-251)
hydrochlorofluorocarbon-252 (HCFC-252)
hydrochlorofluorocarbon-253 (HCFC-253)
hydrochlorofluorocarbon-261 (HCFC-261)
hydrochlorofluorocarbon-262 (HCFC-262)
hydrochlorofluorocarbon-271 (HCFC-271)

1.2.11.1 Universal Waste

The universal waste regulations streamline collection requirements for certain hazardous wastes in the following categories: batteries, pesticides, mercury-containing equipment (e.g., thermostats) and lamps

(e.g., fluorescent bulbs). The rule is designed to reduce hazardous waste in the municipal solid waste (MSW) stream by making it easier for universal waste handlers to collect these items and send them for recycling or proper disposal. These regulations can be found at 40 CFR 273.

1.3 SUBMITTALS

Government approval is required for submittals with a "G" designation; submittals not having a "G" designation are for Contractor Quality Control approval. The following shall be submitted in accordance with Section 01 33 00 SUBMITTAL PROCEDURES:

SD-01 Preconstruction Submittals

Preconstruction Survey; G

Solid Waste Management Plan and Permit; G

Regulatory Notifications; G

Environmental Management Plan; G

Storm Water Pollution Prevention Plan; G

Air Emissions Source Specification Data; G

Dirt and Dust Control Plan

Contractor Hazardous Material Inventory Log; G

SD-06 Test Reports

Laboratory Analysis

Disposal Requirements

Erosion and Sediment Control Inspection Reports

Storm Water Inspection Reports for General Permit

Contractor 40 CFR employee training records

Solid Waste Management Report; G

SD-11 Closeout Submittals

Some of the records listed below are also required as part of other submittals. For the "Records" submittal, maintain on-site a separate three-ring Environmental Records binder and submit at the completion of the project. Make separate parts to the binder corresponding to each of the applicable sub items listed below.

Storm Water Pollution Prevention Plan compliance notebook; G

Waste Determination Documentation

Disposal Documentation for Hazardous and Regulated Waste

Contractor 40 CFR Employee Training Records

Solid Waste Management Permit

Solid Waste Management Report

Contractor Hazardous Material Inventory Log; G

Hazardous Waste/Debris Management

Regulatory Notifications

1.4 ENVIRONMENTAL PROTECTION REQUIREMENTS

Provide and maintain, during the life of the contract, environmental protection as defined. Plan for and provide environmental protective measures to control pollution that develops during normal construction practice. Plan for and provide environmental protective measures required to correct conditions that develop during the construction of permanent or temporary environmental features associated with the project. Comply with Federal, State, and local regulations pertaining to the environment, including water, air, solid waste, hazardous waste and substances, oily substances, and noise pollution.

The Contractor may be required to promptly conduct tests and procedures for the purpose of assessing whether construction operations are in compliance with Applicable Environmental Laws. Analytical work shall be done by qualified laboratories; and where required by law, the laboratories shall be certified.

1.4.1 Environmental Compliance Assessment Training and Tracking System (ECATTS)

The QC Manager is responsible for environmental compliance on projects unless an Environmental Manager is named. The QC Manager (and alternative QC Manager) or Environmental Manager shall complete ECATTS training prior to starting respective portions of on-site work under this contract. If personnel changes occur for any of these positions after starting work, replacement personnel shall complete ECATTS training within 14 days of assignment to the project.

Submit an ECATTS certificate of completion for personnel who have completed the required "Environmental Compliance Assessment Training and Tracking System (ECATTS)" training. This training is web-based and can be accessed from any computer with Internet access using the following instructions.

Register for NAVFAC Environmental Compliance Training and Tracking System, by logging on to http://navfac.ecatts.com/. Use password "navfac" (in all lower case letters) to gain access to the training site.

This training has been structured to allow contractor personnel to receive credit under this contract and also to carry forward credit to future contracts. Contractors shall ensure that the QC Manager (and alternate QC Manager) or Environmental Manager review their training plans for new modules or updated training requirements prior to beginning work. Some training modules are tailored for specific State regulatory requirements; therefore, Contractors working in multiple states will be requires to re-take modules tailored to the state where the contract work is being performed.

ECATTS is available for use by all contractor and subcontractor personnel associated with this project. These other personnel are encouraged (but not required) to take the training and may do so at their discretion.

1.4.2 Conformance with the Environmental Management System

The Contractor shall perform work under this contract consistent with the policy and objectives identified in the installation's Environmental Management System (EMS). The Contractor shall perform work in a manner that conforms to objectives and targets, environmental programs and operational controls identified by the EMS. The Contractor will provide monitoring and measurement information as necessary to address environmental performance relative to environmental, energy, and transportation management goals. In the event an EMS nonconformance or environmental noncompliance associated with the contracted services, tasks, or actions occurs, the Contractor shall take corrective and/or preventative actions. In addition, the Contractor shall ensure that its employees are aware of their roles and responsibilities under the EMS and how these EMS roles and responsibilities affect work performed under the contract.

The Contractor is responsible for ensuring that their employees receive applicable environmental and occupational health and safety training, and keep up to date on regulatory required specific training for the type of work to be conducted onsite. All on-site Contractor personnel, and their subcontractor personnel, performing tasks that have the potential to cause a significant environmental impact shall be competent on the basis of appropriate education, training or experience. Upon contract award, the Contracting Officer's Representative will notify the installation's EMS coordinator to arrange EMS training. Refer to Section 01 57 19.01 20, SUPPLEMENTAL TEMPORARY ENVIRONMENTAL CONTROLS for additional site specific EMS requirements related to construction. The installation's EMS coordinator shall identify training needs associated with environmental aspects and the EMS, and arrange training or take other action to meet these needs. The Contractor shall provide training documentation to the Contracting Officer. The EMS coordinator shall retain associated records.

1.5 QUALITY ASSURANCE

1.5.1 Preconstruction Survey

Perform a Preconstruction Survey of the project site with the Contracting Officer, and take photographs showing existing environmental conditions in and adjacent to the site. Submit a report for the record.

1.5.2 Regulatory Notifications

The Contractor is responsible for all regulatory notification requirements in accordance with Federal, State and local regulations. In cases where the Navy must also provide public notification (such as stormwater permitting), the Contractor must coordinate with the Contracting Officer. The Contractor shall submit copies of all regulatory notifications to the Contracting Officer prior to commencement of work activities. Typically, regulatory notifications must be provided for the following (this listing is not all inclusive): demolition, renovation, NPDES defined site work, remediation of controlled substances (asbestos, hazardous waste, lead paint).

1.5.3 Environmental Brief

Attend an environmental brief to be included in the preconstruction meeting. Provide the following information: types, quantities, and use of hazardous materials that will be brought onto the activity; types and quantities of wastes/wastewater that may be generated during the contract. Discuss the results of the Preconstruction Survey at this time.

Prior to initiating any work on site, meet with the Contracting Officer and activity environmental staff to discuss the proposed Environmental Management Plan. Develop a mutual understanding relative to the details of environmental protection, including measures for protecting natural resources, required reports, required permits, permit requirements, and other measures to be taken.

1.5.4 Environmental Manager

Appoint in writing an Environmental Manager for the project site. The Environmental Manager will be directly responsible for coordinating contractor compliance with Federal, State, local, and station requirements. The Environmental Manager will ensure compliance with Hazardous Waste Program requirements (including hazardous waste handling, storage, manifesting, and disposal); implement the Environmental Management Plan; ensure that all environmental permits are obtained, maintained, and closed out; ensure compliance with Storm Water Program Management requirements; ensure compliance with Hazardous Materials (storage, handling, and reporting) requirements; and coordinate any remediation of regulated substances (lead, asbestos, PCB transformers). This can be a collateral position; however the person in this position must be trained to adequately accomplish the following duties: ensure waste segregation and storage compatibility requirements are met; inspect and manage Satellite Accumulation areas; ensure only authorized personnel add wastes to containers; ensure all Contractor personnel are trained in 40 CFR requirements in accordance with their position requirements; coordinate removal of waste containers; and maintain the Environmental Records binder and required documentation, including environmental permits compliance and close-out.

1.5.5 Contractor 40 CFR Employee Training Records

Prepare and maintain employee training records throughout the term of the contract meeting applicable 40 CFR requirements. The Contractor will ensure every employee completes a program of classroom instruction or on-the-job training that teaches them to perform their duties in a way that ensures compliance with Federal, State and local regulatory requirements for RCRA Large Quantity Generator. The Contractor will provide a Position Description for each employee, by subcontractor, based on the Davis-Bacon Wage Rate designation or other equivalent method, evaluating the employee's association with hazardous and regulated wastes. This Position Description will include training requirements as defined in 40 CFR 265 for a Large Quantity Generator facility. Submit these training records to the Contracting Officer at the conclusion of the project, unless otherwise directed.

PART 2 PRODUCTS

Not Used.

PART 3 EXECUTION

3.1 ENVIRONMENTAL MANAGEMENT PLAN

Prior to initiating any work on site, the Contractor will meet with the Contracting Officer to discuss the proposed Environmental Protection Plan and develop a mutual understanding relative to the details of environmental protection, including measures for protecting natural resources, required reports, and other measures to be taken. The Contractor's Environmental Plan shall incorporate construction related objectives and targets from the installation's Environmental Management System. The Environmental Management Plan will be submitted in the following format and shall include the elements specified below.

a. Description of the Environmental Management Plan

(1) General overview and purpose

(a) A brief description of each specific plan required by environmental permit or elsewhere in this contract.

(b) The duties and level of authority assigned to the person(s) on the job site that oversee environmental compliance.

(c) A copy of any standard or project specific operating procedures that will be used to effectively manage and protect the environment on the project site.

(d) Communication and training procedures that will be used to convey environmental management requirements to contractor employees and subcontractors.

(e) Emergency contact information contact information (office phone number, cell phone number, and e-mail address).

(2) General site information

(3) A letter signed by an officer of the firm appointing the Environmental Manager and stating that he/she is responsible for managing and implementing the Environmental Program as described in this contract. Include in this letter the Environmental Manager's authority to direct the removal and replacement of non-conforming work.

b. Management of Natural Resources

(1) Land resources

(2) Tree protection

(3) Replacement of damaged landscape features

(4) Temporary construction

(5) Stream crossings

(6) Fish and wildlife resources

(7) Wetland areas

c. Protection of Historical and Archaeological Resources

(1) Objectives

(2) Methods

d. Storm Water Management and Control

(1) Ground cover

(2) Erodible soils

(3) Temporary measures

(a) Mechanical retardation and control of runoff

(b) Vegetation and mulch

(4) Effective selection, implementation and maintenance of Best Management Practices (BMPs).

e. Protection of the Environment from Waste Derived from Contractor Operations

(1) Control and disposal of solid and sanitary waste. If Section 01 74 19.05 20 is included in the contract, submit the plan required by that section as part of the Environmental Management Plan.

(2) Control and disposal of hazardous waste (Hazardous Waste Management Section)

This item will consist of the management procedures for all hazardous waste to be generated. The elements of those procedures will coincide with the Activity Hazardous Waste Management Plan. A copy of the Activity Hazardous Waste Management Plan will be provided by the Contracting Officer. As a minimum, include the following:

(a) Procedures to be employed to ensure a written waste determination is made for appropriate wastes which are to be generated;

(b) Sampling/analysis plan;

(c) Methods of hazardous waste accumulation/storage (i.e., in tanks and/or containers);

(d) Management procedures for storage, labeling, transportation, and disposal of waste (treatment of waste is not allowed unless specifically noted);

(e) Management procedures and regulatory documentation ensuring disposal of hazardous waste complies with Land Disposal Restrictions (40 CFR 268);

(f) Management procedures for recyclable hazardous materials such as lead-acid batteries, used oil, and the like;

(g) Used oil management procedures in accordance with 40 CFR 279;

(h) Pollution prevention\hazardous waste minimization procedures;

(i) Plans for the disposal of hazardous waste by permitted facilities;

(j) Procedures to be employed to ensure all required employee training records are maintained.

f. Prevention of Releases to the Environment

(1) Procedures to prevent releases to the environment

(2) Notifications in the event of a release to the environment

g. Regulatory Notification and Permits

(1) List what notifications and permit applications must be made. Demonstrate that those permits have been obtained by including copies of all applicable, environmental permits.

3.1.1 Environmental Protection Plan Review

Within thirty days after the Contract award date, submit the proposed Environmental Management Plan for further discussion, review, and approval. Commencement of work will not begin until the environmental management plan has been approved.

3.1.2 Licenses and Permits

Obtain licenses and permits pursuant to the "Permits and Responsibilities" FAR Clause 52.236-7.

Only an air emissions permit will be obtained by the Contracting Officer.

Where required by the State regulatory authority, the inspections and certifications will be provided through the services of a Professional Engineer (PE), registered in the State where the work is being performed. As a part of the quality control plan, which is required to be submitted for approval by the quality control section, provide a sub item containing the name, appropriate professional registration or licence number, address, and telephone number of the professionals or other qualified persons who will be performing the inspections and certifications for each permit.

3.2 PROTECTION OF NATURAL RESOURCES

Preserve the natural resources within the project boundaries and outside the limits of permanent work. Restore to an equivalent or improved condition upon completion of work. Confine construction activities to within the limits of the work indicated or specified. If the work is near streams, lakes, or other waterways, conform to the national permitting requirements of the Clean Water Act.

Do not disturb fish and wildlife. Do not alter water flows or otherwise significantly disturb the native habitat adjacent to the project and critical to the survival of fish and wildlife, except as indicated or specified.

Except in areas to be cleared, do not remove, cut, deface, injure, or destroy trees or shrubs without the Contracting Officer's permission. Do not fasten or attach ropes, cables, or guys to existing nearby trees for anchorages unless authorized by the Contracting Officer. Where such use of attached ropes, cables, or guys is authorized, the Contractor will be responsible for any resultant damage.

Protect existing trees which are to remain and which may be injured, bruised, defaced, or otherwise damaged by construction operations. Remove displaced rocks from uncleared areas. By approved excavation, remove trees with 30 percent or more of their root systems destroyed. Remove trees and other landscape features scarred or damaged by equipment operations, and replace with equivalent, undamaged trees and landscape features. Obtain Contracting Officer's approval before replacement.

The Contracting Officer's approval is required before any equipment will be permitted to ford live streams. In areas where frequent crossings are required, install temporary culverts or bridges. Obtain Contracting Officer's approval prior to installation. Remove temporary culverts or bridges upon completion of work, and repair the area to its original condition unless otherwise required by the Contracting Officer.

3.2.1 Erosion and Sediment Control Measures

3.2.1.1 Burnoff

Burnoff of the ground cover is not permitted.

3.2.1.2 Protection of Erodible Soils

Immediately finish the earthwork brought to a final grade, as indicated or specified. Immediately protect the side slopes and back slopes upon completion of rough grading. Plan and conduct earthwork to minimize the duration of exposure of unprotected soils.

3.2.1.3 Temporary Protection of Erodible Soils

Immediately finish the earthwork brought to a final grade, as indicated or specified. Immediately protect the side slopes and back slopes upon completion of rough grading. Plan and conduct earthwork to minimize the duration of exposure of unprotected soils. The Contractor is responsible for fully executing the plans and procedures approved in the Contractor's Erosion Control plan. Provide temporary protection of disturbed soils in accordance with North Carolina Sediment Control Commission (NCSCC), Erosion and Sediment Control Planning and Design Manual.

3.2.2 Erosion and Sediment Control Inspection Reports

Submit "Erosion and Sediment Control Inspection Reports" (E&S) (form provided at the pre-construction conference) and Storm Water Inspection Reports for General Permit NCG010000 - Land Disturbing Activities (form provided at http://h20.enr.state.nc.us/su/PDF_Files/SW_General_Permits/NCG01_Inspect_log.pdf) to the Contracting Officer once every 7 calendar days and within 24 hours of a storm event that produces 0.5 inch or more of rain.

Note erosion control inspection reports may be compiled as part of a stormwater pollution prevention plan inspection reports if applicable.

3.2.2.1 Storm Water Pollution Prevention Plan

In conjunction with the Contracting Officer, the Contractor shall apply for and obtain coverage under the North Carolina General Pollution Discharge and Elimination System General Permit for discharges of stormwater from Construction Activities, when 10,000 square feet or more, of land area is disturbed by construction or related construction support operations, including clearing, grubbing, grading, excavation, soil or gravel lay down areas, and demolition that exposes soil.

In North Carolina, the NPDES General Permit is issued with the Erosion and Sediment Control Permit; no separate application is necessary. Coverage under this permit requires the D-B Contractor to prepare a financial responsibility/ownership form and forward to MCB Camp Lejeune for concurrence prior to submittal. In addition, the Contractor shall provide the permit fee to the North Carolina Department of Environmental and Natural Resources (NCDENR) before any land disturbing activities begin. The Contractor shall file for permit coverage on behalf of the Contracting Officer and himself and file a Notice of Termination once construction is complete and the site is stabilized with a final sustainable cover.

Under the terms and conditions of the permit, the Contractor may be required to install, inspect, maintain best management practices (BMPs), and submit stormwater BMP inspection reports and stormwater pollution prevention plan inspection reports. The Contractor shall ensure construction operations and management are constantly in compliance with the terms and conditions of the general permit for storm water discharges from construction activities.

a. The SWPPP shall:

(1) Identify potential sources of pollution which may be reasonably expected to affect the quality of storm water discharge from the site.

(2) Describe and ensure implementation of practices which will be used to reduce the pollutants in storm water discharge from the site.

(3) Ensure compliance with terms of the EPA or State general permit for storm water discharge.

(4) Select applicable best management practices from EPA 833-R-060-04.

(5) Include a completed copy of the Registration Statement, BMP Inspection Report Template and Notice of Termination except for the effective date.

3.2.2.2 Storm Water Pollution Prevention Plan Compliance Notebook

The contractor shall create and maintain a three ring binder of documents that demonstrate compliance with the Stormwater Construction Activity permit. The binder shall include a copy of the permit Registration Statement, proof of permit fee payment, SWPPP and SWPPP update amendments, inspection reports, copies of correspondence with the North Carolina Department of Environmental and Natural Resources (NCDENR) and a copy of the permit Notice of Termination. At the completion of the project the folder shall become the property of the Government. The compliance notebook shall be provided to Contracting Officer. An advance copy of the Registration Statement shall be provided to the Contracting Officer

immediately after the form is presented to the permitting agency.

3.2.3 Stormwater Drainage and Construction Dewatering

There will be no discharge of excavation ground water to the sanitary sewer, storm drains, or to the river without prior specific authorization of the Environmental Division in writing. Discharge of hazardous substances will not be permitted under any circumstances.

Construction site runoff will be prevented from entering any storm drain or the river directly by the use of method suitable to the Environmental Division. Contractor will provide erosion protection of the surrounding soils.

Construction Dewatering shall not be discharged to the sanitary sewer. If the construction dewatering is noted or suspected of being contaminated, it may only be released to the storm drain system if the discharge is specifically permitted. Authorization for any contaminated groundwater release shall be obtained in advance from the base Environmental Officer. Discharge of hazardous substances will not be permitted under any circumstances.

3.2.4 Wetlands

Do not enter, disturb, destroy, or allow discharge of contaminants into any wetlands except as authorized herein. The protection of wetlands is the Contractor's responsibility. Authorization to enter specific wetlands identified will not relieve the Contractor from any obligation to protect other wetlands within, adjacent to, or in the vicinity of the construction site and associated boundaries. Contractor shall ensure wetland boundaries are clearly marked prior to any clearing and grubbing operations. The wetland delineation will be conducted on site by the design engineer with assistance as needed from the Army Corps of Engineers and the base Environmental Management Division.

3.2.5 Air Emissions Permit Application - Government Prepared

This contract may include the design and/or construction of regulated air emission sources that require an air quality permit for construction and operation in accordance with North Carolina Department of Environment and Natural Resources (NCDENR) Division of Air Quality (NCDAQ) permitting procedures. The government will prepare a permit application package for all applicable emission sources in the contract, however the contractor is required to coordinate submission of all Air Emissions Source Specification Data necessary for the preparation of the application package a minimum of 180 calendar days prior to any construction or installation of any emission source point associated with this project. Marine Corps Base, Camp Lejeune and Marine Corps Air Station, New River, have been issued one Clean Air Act Title V Construction and Operation Permit issued by NCDAQ. The facility is considered a major source for both criteria pollutants and federally listed Hazardous Air Pollutant (HAP). The facility is also subject to North Carolina Toxic Air Pollutant (TAP) regulations to include requirements for facility wide air dispersion modeling and facility fence line emission limits for certain pollutants. Typical emission sources requiring a permit include:

a. Boilers

(1) Boilers less than 10 MMBtu/hr are considered insignificant per NC

regulations (15A NCAC 2Q.0503), but may still require analysis & permitting.

b. Storage Tanks

c. Fuel Dispensing

d. Emergency Generators

e. Non-Emergency Generators

f. Engine Testing Stations or Stands (where engine is removed from mobile vehicle/craft for testing)

g. Fire Training Pits

h. Woodworking/Grinding

i. Abrasive Blasting

j. Paint Stripping

k. Parts Cleaners/Ovens

l. Surface Coating (Paint Booths)

m. Epoxy Curing Benches

n. Remediation Systems

o. Welding/Soldering

p. Refrigerant Recovery/Recycling

3.2.5.1 Regulations Applicability

The permit application will require an evaluation of the applicability of the following regulations:

a. New Source Review (NSR) / Prevention of Significant Deterioration (PSD)(40 CFR 51, 40 CFR 52)

b. New Source Performance Standards (NSPS) (40 CFR 60)

(1) Possible source categories include but are not limited to boilers & internal combustion engines/generators

c. National Emission Standards for Hazardous Air Pollutants (NESHAP) (40 CFR 61,40 CFR 63)

(1) Possible source categories include but are not limited to Reciprocating Internal Combustion Engines (RICE)

d. North Carolina Air Toxics Program (15A NCAC 2D.1100, 2Q.0700)

(1) Many new air emission sources may require air dispersion modeling to receive a permit and/or demonstrate compliance. A July 2010 rule change in the North Carolina regulatory process removed the exemption of combustion sources (e.g. boilers, generators) from

the air toxics program effective for sources permitted requiring modeling for these types of sources. This imposes additional permitting requirements on the facility. Projects including combustion sources should be coordinated on a case-by-case basis with the NAVFAC IPT and the installation Environmental Management Division.

3.2.5.2 Type Of Permit Required

Based on preliminary review, it is not anticipated that new emission sources will require New Source Review (NSR) permitting; however, potential air emission rates for new emission sources may exceed Prevention of Significant Deterioration (PSD) thresholds, therefore PSD avoidance permit conditions and/or operating limits (e.g. fuel usage or operating hour limits).

3.2.5.3 Permit Application Package

The permit application package will include the following:

a. Clear, concise, & explanatory supporting documentation & narrative

b. Required permit application forms (Title V)

c. Air emissions calculations

d. Equipment drawings and specifications

e. Facility diagrams and/or maps

3.2.5.4 Time Allowance For Permit

The contractor should allow for approximately six months from the time of permit application submission to permit issuance. Construction of an air emission source cannot begin without a permit or a waiver, and operation of the source cannot begin without a permit.

3.3 HISTORICAL AND ARCHAEOLOGICAL RESOURCES

Carefully protect in-place and report immediately to the Contracting Officer historical and archaeological items or human skeletal remains discovered in the course of work. Upon discovery, notify the Contracting Officer. Stop work in the immediate area of the discovery until directed by the Contracting Officer to resume work. The Government retains ownership and control over historical and archaeological resources.

3.4 SOLID WASTE MANAGEMENT PLAN and PERMIT

Provide to the contracting officer written notification of the quantity of solid waste/debris that is anticipated to be generated by construction. Include in the report the locations where various types of waste will be disposed or recycled. Include letters of acceptance or as applicable, submit one copy of a State and local Solid Waste Management Permit or license showing such agency's approval of the disposal plan before transporting wastes off Government property.

3.4.1 Solid Waste Management Report

Monthly, submit a solid waste disposal report to the Contracting Officer.

For each waste, the report will state the classification (using the definitions provided in this section), amount, location, and name of the business receiving the solid waste.

The Contractor will include copies of the waste handling facilities' weight tickets, receipts, bills of sale, and other sales documentation. In lieu of sales documentation, the Contractor may submit a statement indicating the disposal location for the solid waste which is signed by an officer of the Contractor firm authorized to legally obligate or bind the firm. The sales documentation or Contractor certification will include the receiver's tax identification number and business, EPA or State registration number, along with the receiver's delivery and business addresses and telephone numbers. For each solid waste retained by the Contractor for his own use, the Contractor will submit on the solid waste disposal report the information previously described in this paragraph. Prices paid or received will not be reported to the Contracting Officer unless required by other provisions or specifications of this Contract or public law.

3.4.2 Control and Management of Solid Wastes

Pick up solid wastes, and place in covered containers which are regularly emptied. Do not prepare or cook food on the project site. Prevent contamination of the site or other areas when handling and disposing of wastes. At project completion, leave the areas clean. Recycling is encouraged and can be coordinated with the Contracting Officer and the activity recycling coordinator. Remove all solid waste (including non-hazardous debris) from Government property and dispose off-site at an approved landfill. Solid waste disposal off-site must comply with most stringent local, State, and Federal requirements including 40 CFR 241, 40 CFR 243, and 40 CFR 258.

Manage spent hazardous material used in construction, including but not limited to, aerosol cans, waste paint, cleaning solvents, contaminated brushes, and used rags, as per environmental law.

3.5 WASTE DETERMINATION DOCUMENTATION

Complete a Waste Determination form (provided at the pre-construction conference) for all contractor derived wastes to be generated. Base the waste determination upon either a constituent listing from the manufacturer used in conjunction with consideration of the process by which the waste was generated, EPA approved analytical data, or laboratory analysis (Material Safety Data Sheets (MSDS) by themselves are not adequate). Attach all support documentation to the Waste Determination form. As a minimum, a Waste Determination form must be provided for the following wastes (this listing is not all inclusive): oil and latex based painting and caulking products, solvents, adhesives, aerosols, petroleum products, and all containers of the original materials.

3.6 CONTRACTOR HAZARDOUS MATERIAL INVENTORY LOG

Submit the "Contractor Hazardous Material Inventory Log"(found at: http://www.wbdg.org/ccb/NAVGRAPH/graphtoc.pdf), which provides information required by (EPCRA Sections 312 and 313) along with corresponding Material Safety Data Sheets (MSDS) to the Contracting Officer at the start and at the end of construction (30 days from final acceptance), and update no later than January 31 of each calendar year during the life of the contract. Documentation for any spills/releases, environmental reports or off-site transfers may be requested by the Contracting Officer.

3.6.1 Disposal Documentation for Hazardous and Regulated Waste

Manifest, pack, ship and dispose of hazardous or toxic waste and universal waste that is generated as a result of construction in accordance with the generating facilities generator status under the Recourse Conservation and Recovery Act. Contact the Contracting Officer for the facility RCRA identification number that is to be used on each manifest.

Submit a copy of the applicable EPA and or State permit(s), manifest(s), or license(s) for transportation, treatment, storage, and disposal of hazardous and regulated waste by permitted facilities. Hazardous or toxic waste manifest must be reviewed, signed, and approved by the Navy before the Contractor may ship waste. To obtain specific disposal instructions the Contractor must coordinate with the Activity environmental office. Refer to Section 01 57 19.01 20 SUPPLEMENTAL TEMPORARY ENVIRONMENTAL CONTROLS for the Activity Point of Contact information.

3.7 POLLUTION PREVENTION/HAZARDOUS WASTE MINIMIZATION

Minimize the use of hazardous materials and the generation of hazardous waste. Include procedures for pollution prevention/ hazardous waste minimization in the Hazardous Waste Management Section of the Environmental Management Plan. Consult with the activity Environmental Office for suggestions and to obtain a copy of the installation's pollution prevention/hazardous waste minimization plan for reference material when preparing this part of the plan. If no written plan exists, obtain information by contacting the Contracting Officer. Describe the types of the hazardous materials expected to be used in the construction when requesting information.

3.8 WHM/HW MATERIALS PROHIBITION

No waste hazardous material or hazardous waste shall be disposed of on government property. No hazardous material shall be brought onto government property that does not directly relate to requirements for the performance of this contract. The government is not responsible for disposal of Contractor's waste material brought on the job site and not required in the performance of this contract. The intent of this provision is to dispose of that waste identified as waste hazardous material/hazardous waste as defined herein that was generated as part of this contract and existed within the boundary of the Contract limits and not brought in from offsite by the Contractor. Incidental materials used to support the contract including, but not limited to aerosol cans, waste paint, cleaning solvents, contaminated brushes, rags, clothing, etc. are the responsibility of the Contractor. The list is illustrative rather than inclusive. The Contractor is not authorized to discharge any materials to sanitary sewer, storm drain, or to the river or conduct waste treatment or disposal on government property without written approval of the Contracting Officer.

3.9 HAZARDOUS MATERIAL MANAGEMENT

No hazardous material shall be brought onto government property that does not directly relate to requirements for the performance of this contract.

Include hazardous material control procedures in the Safety Plan. Address procedures and proper handling of hazardous materials, including the appropriate transportation requirements. Submit a MSDS and estimated

quantities to be used for each hazardous material to the Contracting Officer prior to bringing the material on base. Typical materials requiring MSDS and quantity reporting include, but are not limited to, oil and latex based painting and caulking products, solvents, adhesives, aerosol, and petroleum products. At the end of the project, provide the Contracting Officer with the maximum quantity of each material that was present at the site at any one time, the dates the material was present, the amount of each material that was used during the project, and how the material was used. Ensure that hazardous materials are utilized in a manner that will minimize the amount of hazardous waste that is generated. Ensure that all containers of hazardous materials have NFPA labels or their equivalent. Keep copies of the MSDS for hazardous materials on site at all times and provide them to the Contracting Officer at the end of the project. Certify that all hazardous materials removed from the site are hazardous materials and do not meet the definition of hazardous waste per 40 CFR 261.

3.10 MILITARY MUNITIONS

In the event military munitions, as defined in 40 CFR 260, are discovered or uncovered, immediately stop work in that area and immediately inform the ROICC or Contracting Representative.

3.10.1 Emergency Unexploded Ordinance (UXO) Response

In the event UXOs, as defined in 40 CFR 260, are encountered during construction activities, stop work immediately and have all personnel clear the immediate area. Immediately report the situation to the ROICC or Contracting Representative, who will then report the item to Range Control and Explosive Ordnance Disposal (EOD).

3.10.2 UXO Safety Awareness Training

Complete 3R (Recognize, Retreat, Report) UXO Safety Awareness Training prior to working in known contaminated areas at MCB Camp Lejeune. Refer to the website http://www.lejeune.marines.mil/OfficesStaff/EnvironmentalMgmt/TrainingVideo.aspx for the training and the latest edition of the Camp Lejeune Contractor Environmental Guide for guidance and information.

3.11 PETROLEUM PRODUCTS AND REFUELING

Conduct the fueling and lubricating of equipment and motor vehicles in a manner that protects against spills and evaporation. Manage all used oil generated on site in accordance with 40 CFR 279. Determine if any used oil generated while on-site exhibits a characteristic of hazardous waste. Used oil containing 1000 parts per million of solvents will be considered a hazardous waste and disposed of at Contractor's expense. Used oil mixed with a hazardous waste will also be considered a hazardous waste.

3.11.1 Oily and Hazardous Substances

Prevent oil or hazardous substances from entering the ground, drainage areas, or navigable waters. In accordance with 40 CFR 112, surround all temporary fuel oil or petroleum storage tanks with a temporary berm or containment of sufficient size and strength to contain the contents of the tanks, plus 10 percent freeboard for precipitation. The berm will be impervious to oil for 72 hours and be constructed so that any discharge will not permeate, drain, infiltrate, or otherwise escape before cleanup

occurs.

3.11.2 Inadvertent Discovery of Petroleum Contaminated Soil or Hazardous Wastes

If petroleum contaminated soil or suspected hazardous waste is found during construction that was not identified in the contract documents, the Contractor shall immediately notify the Contracting Officer. The Contractor shall not disturb this material until authorized by the Contracting Officer.

3.12 FUEL TANKS

Petroleum products and lubricants required to sustain up to 30 days of construction activity may be kept on site. Storage and refilling practices shall comply with 40 CFR 112. Secondary containment shall be provided and be no less than 110 percent of the tank volume plus five inches of free-board. If a secondary berm is used for containment then the berm shall be impervious to oil for 72 hours and be constructed so that any discharge will not permeate, drain, infiltrate, or otherwise escape before cleanup occurs. Drip pans are required and the tanks must be covered during inclement weather.

3.13 RELEASES/SPILLS OF OIL AND HAZARDOUS SUBSTANCES

Exercise due diligence to prevent, contain, and respond to spills of hazardous material, hazardous substances, hazardous waste, sewage, regulated gas, petroleum, lubrication oil, and other substances regulated by environmental law. Maintain spill cleanup equipment and materials at the work site. In the event of a spill, take prompt, effective action to stop, contain, curtail, or otherwise limit the amount, duration, and severity of the spill/release. In the event of any releases of oil and hazardous substances, chemicals, or gases; immediately (within 15 minutes) notify the Base or Activity Fire Department, the activity's Command Duty Officer, and the Contracting Officer. If the contractor's response is inadequate, the Navy may respond. If this should occur, the contractor will be required to reimburse the government for spill response assistance and analysis.

The Contractor is responsible for verbal and written notifications as required by the federal 40 CFR 355, State, local regulations and Navy Instructions. Spill response will be in accordance with 40 CFR 300 and applicable State and local regulations. Contain and clean up these spills without cost to the Government. If Government assistance is requested or required, the Contractor will reimburse the Government for such assistance. Provide copies of the written notification and documentation that a verbal notification was made within 20 days.

Maintain spill cleanup equipment and materials at the work site. Clean up all hazardous and non-hazardous (WHM) waste spills. The Contractor shall reimburse the government for all material, equipment, and clothing generated during any spill cleanup. The Contractor shall reimburse the government for all costs incurred including sample analysis materials, equipment, and labor if the government must initiate its own spill cleanup procedures, for Contractor responsible spills, when:

a. The Contractor has not begun spill cleanup procedure within one hour of spill discovery/occurrence, or

b. If, in the government's judgment, the Contractor's spill cleanup is not adequately abating life threatening situation and/or is a threat to any body of water or environmentally sensitive areas.

3.14 CONTROL AND MANAGEMENT OF HAZARDOUS WASTES

3.14.1 Facility Hazardous Waste Generator Status

MCB Camp Lejeune is designated as a Large Quantity Generator. All work conducted within the boundaries of this activity must meet the regulatory requirements of this generator designation. The Contractor will comply with all provisions of Federal, State and local regulatory requirements applicable to this generator status regarding training and storage, handling, and disposal of all construction derived wastes.

3.14.2 Hazardous Waste/Debris Management

Identify all construction activities which will generate hazardous waste/debris. Provide a documented waste determination for all resultant waste streams. Hazardous waste/debris will be identified, labeled, handled, stored, and disposed of in accordance with all Federal, State, and local regulations including 40 CFR 261, 40 CFR 262, 40 CFR 263, 40 CFR 264, 40 CFR 265, 40 CFR 266, and 40 CFR 268.

Hazardous waste will also be managed in accordance with the approved Hazardous Waste Management Section of the Environmental Protection Plan. Store hazardous wastes in approved containers in accordance with 49 CFR 173 and 49 CFR 178. Hazardous waste generated within the confines of Government facilities will be identified as being generated by the Government.

Prior to removal of any hazardous waste from Government property, all hazardous waste manifests must be signed by activity personnel from the Station Environmental Office. No hazardous waste will be brought onto Government property. Provide to the Contracting Officer a copy of waste determination documentation for any solid waste streams that have any potential to be hazardous waste or contain any chemical constituents listed in 40 CFR 372-SUBPART D. For hazardous wastes spills, verbally notify the Contracting Officer immediately.

3.14.2.1 Regulated Waste Storage/Satellite Accumulation/90 Day Storage Areas

If the work requires the temporary storage/collection of regulated or hazardous wastes, the Contractor will request the establishment of a Regulated Waste Storage Area, a Satellite Accumulation Area, or a 90 Day Storage Area at the point of generation. The Contractor must submit a request in writing to the Contracting Officer providing the following information:

Contract Number	_____	Contractor	_____
Haz/Waste or Regulated Waste POC	_____	Phone Number	_____
Type of Waste	_____	Source of Waste	_____
Emergency POC	_____	Phone Number	_____
Location of the Site:	_____		

(Attach Site Plan to the Request)

Attach a waste determination form. Allow ten working days for processing this request. The designated area where waste is being stored shall be barricaded and a sign identifying as follows:

"DANGER - UNAUTHORIZED PERSONNEL KEEP OUT"

3.14.2.2 Sampling and Analysis of HW

a. Waste Sampling

Sample waste in accordance with EPA 530/F-93/004. Each sampled drum or container will be clearly marked with the Contractor's identification number and cross referenced to the chemical analysis performed.

b. Laboratory Analysis

Follow the analytical procedure and methods in accordance with the 40 CFR 261. The Contractor will provide all analytical results and reports performed to the Contracting Officer.

c. Analysis Type

Identify waste hazardous material/hazardous waste by analyzing for the following properties as a minimum: ignitability, corrosiveness, total chlorides, BTU value, PCBs, TCLP for heavy metals, and cyanide.

3.14.2.3 Asbestos Certification

Items, components, or materials disturbed by or included in work under this contract may involve asbestos. Other materials in the general area around where work will be performed may contain asbestos. All thermal insulation, in all work areas, should be considered to be asbestos unless positively identified by conspicuous tags or previous laboratory analysis certifying them as asbestos free.

Inadvertent discovery of non-disclosed asbestos that will result in an abatement action requires a change in scope before proceeding. Upon discovery of asbestos containing material not identified in the contract documents, the Contractor shall immediately stop all work that would generate further damage to the material, evacuate the asbestos exposed area, and notify the Contracting Officer for resolution of the situation prior to resuming normal work activities in the affected area. The Contractor will not remove or perform work on any asbestos containing materials without the prior approval of the Contracting Officer. The Contractor will not engage in any activity, which would remove or damage such materials or cause the generation of fibers from such materials.

Asbestos containing waste shall be managed and disposed of in accordance with applicable environmental law. Asbestos containing waste shall be manifested and the manifest provided to the Contracting Officer.

3.14.2.4 Hazardous Waste Disposal

No hazardous, toxic, or universal waste shall be disposed or hazardous material abandoned on government property. And unless otherwise other wise noted in this contract, the government is not responsible for disposal of Contractor generated waste material. The disposal of incidental materials

used to accomplish the work including, but not limited to aerosol cans, waste paint, cleaning solvents, contaminated brushes, rags, clothing, etc. are the responsibility of the Contractor. The list is illustrative rather than inclusive.

The Contractor is not authorized to discharge any materials to sanitary sewer, storm drain, or water way or conduct waste treatment or disposal on government property without written approval of the Contracting Officer.

Control of stored waste, packaging, sampling, analysis, and disposal will be determined by the details in the contract. The requirements for jobs in the following paragraphs will be used as the guidelines for disposal of any hazardous waste generated.

a. Responsibilities for Contractor's Disposal

Contractor responsibilities include any generation of WHM/HW requiring Contractor disposal of solid waste or liquid.

(1) The Contractor agrees to provide all service necessary for the final treatment/disposal of the hazardous material/waste in accordance with all local, State and Federal laws and regulations, and the terms and conditions of the contract within sixty (60) days after the materials have been generated. These services will include all necessary personnel, labor, transportation, packaging, detailed analysis (if required for disposal, and/or transportation, including manifesting or completing waste profile sheets, equipment, and the compilation of all documentation is required).

(2) Contain all waste in accordance with 40 CFR 260, 40 CFR 261, 40 CFR 262, 40 CFR 263, 40 CFR 264, 40 CFR 265, 40 CFR 266, 40 CFR 268, 40 CFR 270, 40 CFR 272, 40 CFR 273, 40 CFR 279, 40 CFR 280, and 40 CFR 761.

(3) Obtaining a representative sample of the material generated for each job done to provide waste stream determination.

(4) Analyzing for each sample taken and providing analytical results to the Contracting Officer. Provide two copies of the results.

(5) Determine the DOT proper shipping names for all waste (each container requiring disposal) and will demonstrate how this determination is developed and supported by the sampling and analysis requirements contained herein to the Contracting Officer.

Contractor Disposal Turn-In Requirements

For any waste hazardous materials or hazardous waste generated which requires the Contractor to dispose of, the following conditions must be complied with in order to be acceptable for disposal:

a. Drums compatible with waste contents and drums meet DOT requirements for 49 CFR 173 for transportation of materials.

b. Drums banded to wooden pallets. No more than three (3) 55 gallon drums to a pallet, or two (2) 85 gallon over packs.

c. Band using 1-1/4 inch minimum band on upper third of drum.

d. Recovery materials label (provided by Code 106.321) located in middle of drum, filled out to indicate actual volume of material, name of material manufacturer, other vendor information as available.

e. Always have three (3) to five (5) inches of empty space above volume of material. This space is called 'outage'.

3.14.3 Class I ODS Prohibition

Class I ODS as defined and identified herein will not be used in the performance of this contract, nor be provided as part of the equipment. This prohibition will be considered to prevail over any other provision, specification, drawing, or referenced documents. Regulations related to the protection of stratosphere ozone may be found in 40 CFR 82.

Heating and air conditioning technicians must be certified through an EPA-approved program. Copies of certifications shall be maintained at the employees' place of business and be carried as a wallet card by the technician, as provided by environmental law. Accidental venting of a refrigerant is a release and shall be reported to the Contracting Officer.

3.14.3.1 Universal Waste/e-Waste Management

Universal waste including but not limited to some mercury containing building products such florescent lamps, mercury vapor lamps, high pressure sodium lamps, CRTs, batteries, aerosol paint containers, electrical equipment containing PCBs, and consumed electronic devices, shall be managed in accordance with applicable environmental law and installation instructions.

3.15 DUST CONTROL

Keep dust down at all times, including during nonworking periods. Sprinkle or treat, with dust suppressants, the soil at the site, haul roads, and other areas disturbed by operations. Dry power brooming will not be permitted. Instead, use vacuuming, wet mopping, wet sweeping, or wet power brooming. Air blowing will be permitted only for cleaning nonparticulate debris such as steel reinforcing bars. Only wet cutting will be permitted for cutting concrete blocks, concrete, and bituminous concrete. Do not unnecessarily shake bags of cement, concrete mortar, or plaster.

3.15.1 Dirt and Dust Control Plan

Submit truck and material haul routes along with a plan for controlling dirt, debris, and dust on base roadways. As a minimum, identify in the plan the subcontractor and equipment for cleaning along the haul route and measures to reduce dirt, dust, and debris from roadways.

3.16 ABRASIVE BLASTING

3.16.1 Blasting Operations

The use of silica sand is prohibited in sandblasting.

Provide tarpaulin drop cloths and windscreens to enclose abrasive blasting operations to confine and collect dust, abrasive, agent, paint chips, and other debris in accordance with the requirements specified.

3.16.2 Disposal Requirements

Submit analytical results of the debris generated from abrasive blasting operations per paragraph entitled Laboratory Analysis of this section. Hazardous waste generated from blasting operations will be managed in accordance with paragraph entitled "Hazardous Waste\Debris Management" of this section and with the approved HWMP.

3.17 NOISE

Make the maximum use of low-noise emission products, as certified by the EPA. Blasting or use of explosives will not be permitted without written permission from the Contracting Officer, and then only during the designated times. Confine pile-driving operations to the period between 8 a.m. and 4 p.m., Monday through Friday, exclusive of holidays, unless otherwise specified.

3.18 MERCURY MATERIALS

Mercury is prohibited in the construction of this facility, unless specified otherwise, and with the exception of mercury vapor lamps and fluorescent lamps. Dumping of mercury-containing materials and devices such as mercury vapor lamps, fluorescent lamps, and mercury switches, in rubbish containers is prohibited. Remove without breaking, pack to prevent breakage, and transport out of the activity in an unbroken condition for disposal as directed. Immediately report to the Environmental Office and the Contracting Officer instances of breakage or mercury spillage. Clean mercury spill area to the satisfaction of the Contracting Officer.

Cleanup of a mercury spill shall not be recycled and shall be managed as a hazardous waste for disposal.

-- End of Section --

THIS PAGE HAS BEEN INTENTIONALLY LEFT BLANK

SECTION 01 57 19.01 20

SUPPLEMENTAL TEMPORARY ENVIRONMENTAL CONTROLS
09/14

PART 1 GENERAL

1.1 REGIONAL REQUIREMENTS

1.1.1 Mid-Atlantic

1.1.1.1 North Carolina

a. MCB Camp Lejeune

(1) Removal of Waste from Camp Lejeune:

Remove and dispose of rubbish and debris from Government property.

(a) Provide 24-hour advance written notice to the Contracting Office of Contractor's intention to dispose of off base.

(b) Disposal at sites or landfills not holding a valid state of North Carolina permit is specifically prohibited. The prohibition also applies to sites where a permit may have been applied for but not yet obtained.

(c) Off-base disposal of construction debris outside the parameters of this paragraph at site without State permits and/or not in accordance with regulatory requirements will require the Contractor at his own expense to remove, transport and relocate the debris to a State approved site. The Contractor will also be required to pay any fines, penalties, or fees related to the illegal disposal of construction debris.

(d) Materials which may be deposited in the landfill include:

CATEGORY	CONSTRUCTION DEBRIS DISPOSAL - BASE SANITARY LANDFILL EXAMPLE/GENERAL INFORMATION FOR DEPOSIT IN THE LANDFILL
Recyclable Cardboard	Breakdown corrugated cardboard boxes and deliver to the Base Recycling Center located at Building 913. If Base personnel rejects the cardboard, remove from government property.
Asphalt Pavement	Remove pavement from Government property and deliver to an asphalt-recycling establishment. Provide a record of the total tons of asphalt recycled and the corporate name and location of the recycling establishment receiving the removed asphalt.
Asbestos	Asbestos will be accepted at the landfill.
Lead Based Paint and Materials	Well adhered lead containing paint debris as whole unit removal, will be accepted at the base landfill.

Lead scrapping chips from areas identified within the contract scope, after TCLP testing, will be disposed of at the base landfill if under 5 ppm; over 5 ppm is considered hazardous and will require manifesting per EMD rules and disposal off base at a certified, licensed disposal site.

Metals

Metals will not be accepted at the landfill. Remove metals from each and every category before delivery to the landfill. (Example: Remove hardware from doors and windows.)

Segregate metals and dispose of metal construction debris at Defense Reutilization Maintenance Office (DRMO) Building TC-861, Camp Geiger.

(2) Open Burning of Vegetative Debris for MCB Camp Lejeune and MCAS New River:

Open burning of vegetative debris is allowed in some cases. Contact Lisa Gideon, Camp Lejeune Air Quality Program Manager at (910) 451-5836 for the latest regulations, and requirements for open burning of vegetative debris.

PART 2 PRODUCTS

Not Used.

PART 3 EXECUTION

Not Used.

-- End of Section --

SECTION 01 58 00

PROJECT IDENTIFICATION
09/14

PART 1 GENERAL

1.1 REFERENCES

The publications listed below form a part of this specification to the extent referenced. The publications are referred to within the text by the basic designation only.

AMERICAN WOOD PROTECTION ASSOCIATION (AWPA)

AWPA C1	(2003) All Timber Products - Preservative Treatment by Pressure Processes
AWPA C2	(2003) Lumber, Timber, Bridge Ties and Mine Ties - Preservative Treatment by Pressure Processes

1.2 SUBMITTALS

Government approval is required for submittals with a "G" designation; submittals not having a "G" designation are for Contractor Quality Control approval. The following shall be submitted in accordance with Section 01 33 00 SUBMITTAL PROCEDURES:

SD-02 Shop Drawings

preliminary drawing indicating layout and text content; G

SD-04 Samples

Facility Recognition Plaque; G

1.3 QUALITY ASSURANCE

1.3.1 Facility Recognition Plaque

Submit full size drawing of Facility Recognition Plaque for approval. Contractor shall confirm the content (message), location and mounting with Contracting Officer prior to fabrication. The names on the plaque shall be determined at the end of the project duration to assure that current participants can be identified and recognized on the plaque.

1.4 PROJECT SIGN

Prior to initiating any work on site, provide one project identification sign at the location designated. Construct the sign in accordance with project sign detail attached at the end of this section. Maintain sign throughout the life of the project. Upon completion of the project, remove the sign from the site.

1.4.1 Project Identification Signboard (Navy)

A project identification signboard shall be provided in accordance with

the attached Plates. Provide preliminary drawing indicating layout and text content.The signboard shall be provided at a conspicuous location on the job site where directed by the Contracting Officer.

a. The field of the sign shall consist of a 4 by 8 foot sheet of grade B-B medium density overlaid exterior plywood.

b. Lumber shall be B or better Southern pine, pressure-preservative treated in accordance with AWPA C1 and AWPA C2. Nails shall be aluminum or galvanized steel.

c. The entire signboard and supports shall be given one coat of exterior alkyd primer and two coats of exterior alkyd enamel paint. The lettering and sign work shall be performed by a skilled sign painter using paint known in the trade as bulletin colors. The colors, lettering sizes, and lettering styles shall be as indicated. Where preservative-treated lumber is required, utilize only cured pressure-treated wood which has had the chemicals leached from the surface of the wood prior to painting.

d. Use spray applied automotive quality high gloss acrylic white enamel paint as background for the NAVFAC logo. NAVFAC logo shall be an applied 2 millimeter film sticker/decal with either transparent or white background or paint the logo by stencil onto the sign. The weather resistant sticker/decal film shall be rated for a minimum of 2-year exterior vertical exposure. The self-adhering sticker shall be mounted to the sign with pressure sensitive, permanent acrylic adhesive. Shop cut sticker/decal to rectangular shape and provide pull-off backing sheet on adhesive side of design sticker for shipping.

e. Sign paint colors (manufacturer's numbers/types listed below for color identification only)

(1) Blue = To match dark blue color in the NAVFAC logo.

(2) White = To match Brilliant White color in the NAVFAC logo.

f. NAVFAC logo must retain proportions and design integrity. NAVFAC logos in electronic format may be obtained from the NAVFAC web portal via the following link:
https://portal.navfac.navy.mil/portal/page?_pageid=181,3465071&_dad=portal&_schema=p
Use the following to choose color values for the paint to be used:

(1) Dark Blue = equivalent to CMYK values 100, 72, 0, 8.

(2) Light Blue = equivalent to CMYK values 69, 34, 0, 0.

(3) Cyan = equivalent to CMYK values 100, 9, 0, 6.

(4) Yellow = equivalent to CMYK values 0.9,94, 0.

PART 2 PRODUCTS

Not Used.

PART 3 EXECUTION

Not Used.

-- End of Section --

THIS PAGE HAS BEEN INTENTIONALLY LEFT BLANK

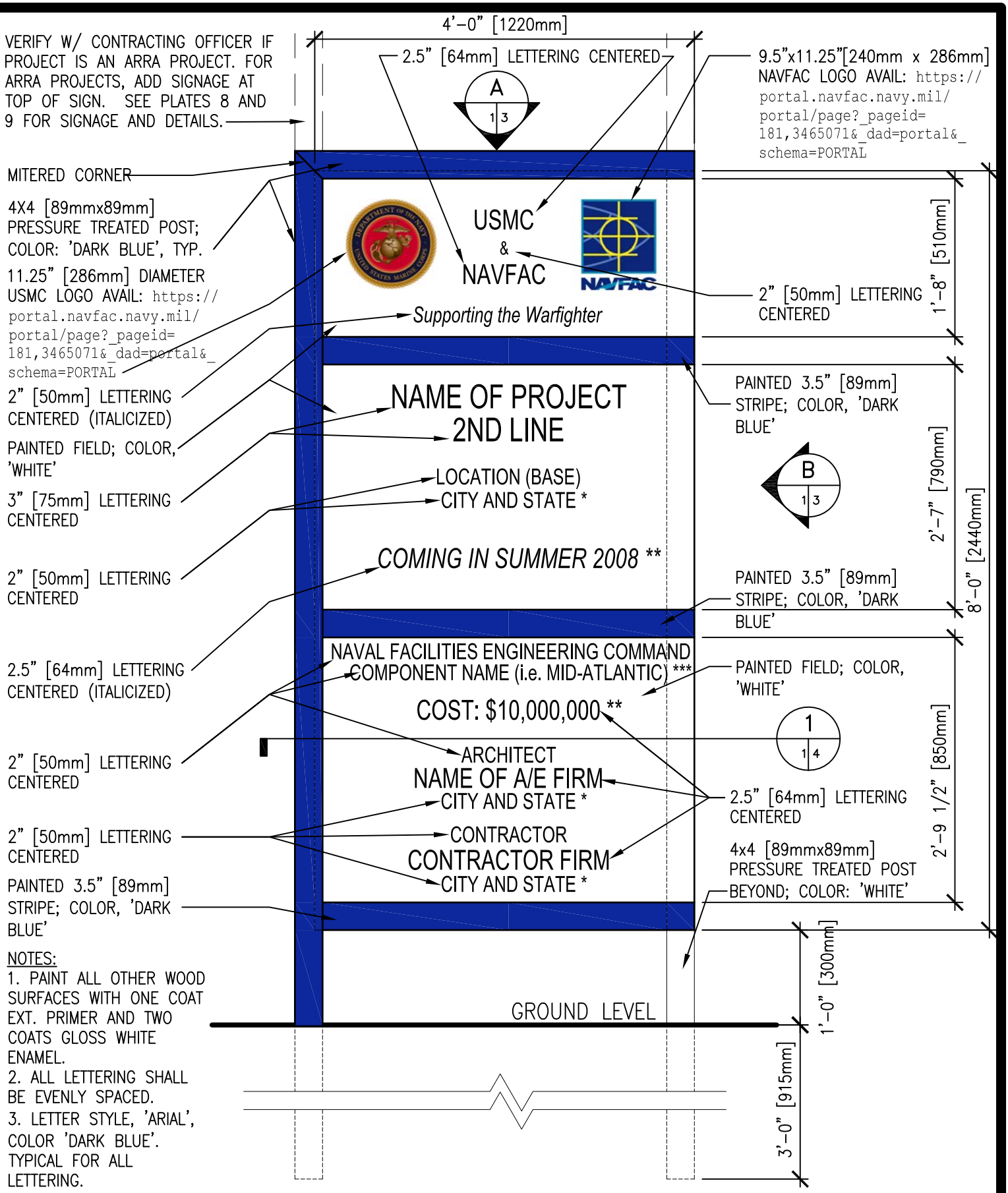

NOTES:
1. PAINT ALL OTHER WOOD SURFACES WITH ONE COAT EXT. PRIMER AND TWO COATS GLOSS WHITE ENAMEL.
2. ALL LETTERING SHALL BE EVENLY SPACED.
3. LETTER STYLE, 'ARIAL', COLOR 'DARK BLUE'. TYPICAL FOR ALL LETTERING.
*–ABBREVIATE STATE
**–CONFIRM USE WITH CONTRACTING OFFICER
***–VERIFY NAME WITH CONTRACTING OFFICER.

PROJECT IDENTIFICATION SIGNBOARD FOR MARINE CORPS PROJECTS

SCALE: 3/4" = 1'-0"

PLATE 1MC

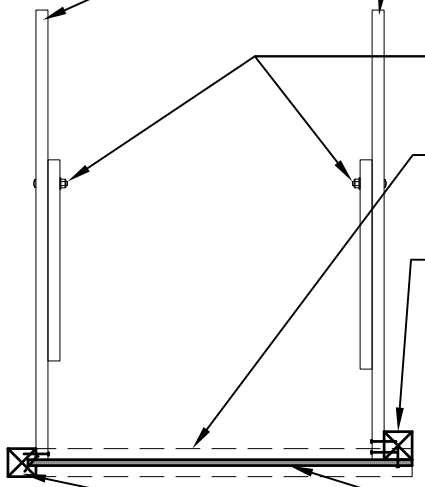

A 1,2 3

TOP VIEW

SCALE: 1/2" = 1'-0"

NOTES:
1. POSTS AND BRACES SHALL BE PRESSURE TREATED.
2. ALL FASTENERS SHALL BE ZINC COATED.
3. BRACING IS REQUIRED IN ALL SOIL CONDITIONS AND HIGH WIND ENVIRONMENTS.

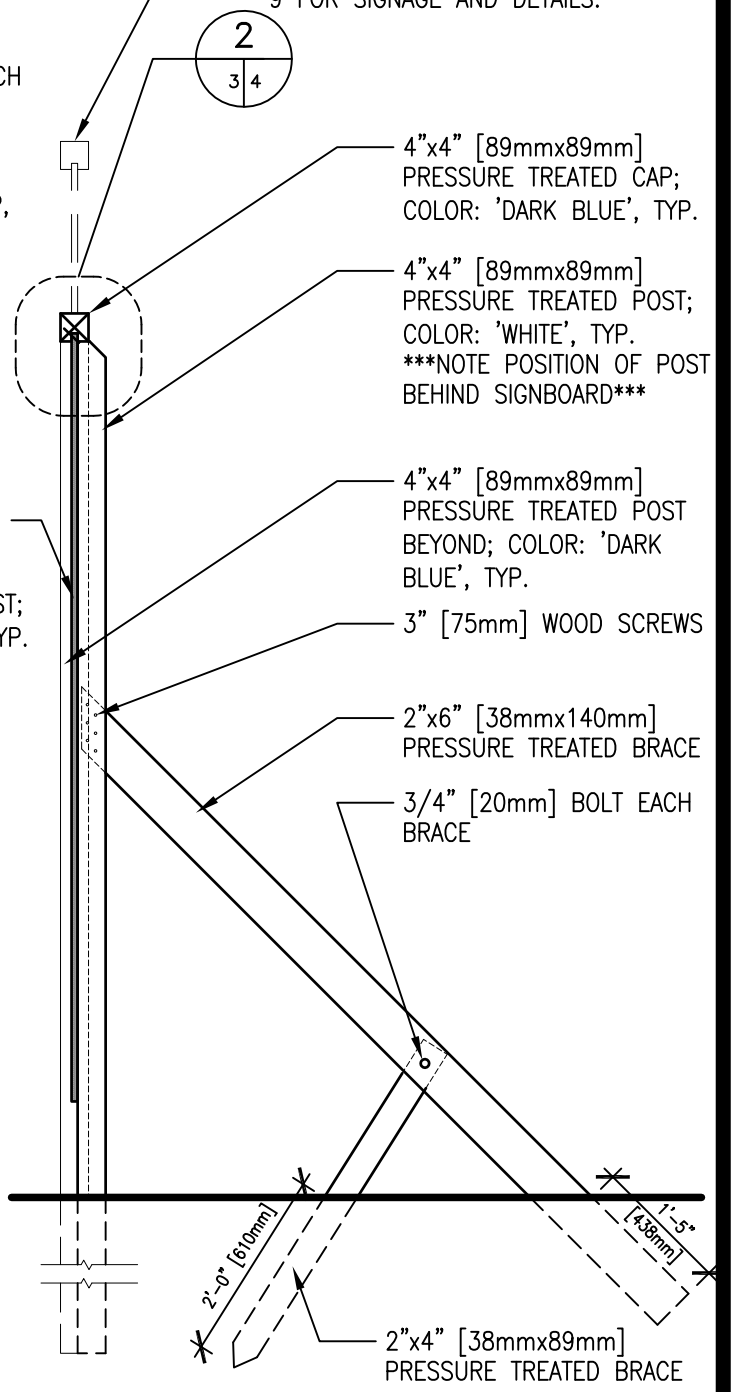

B 1,2 3

SIDE VIEW

SCALE: 1/2" = 1'-0"

PROJECT IDENTIFICATION SIGNBOARD SUPPORT DETAILS

PLATE 3

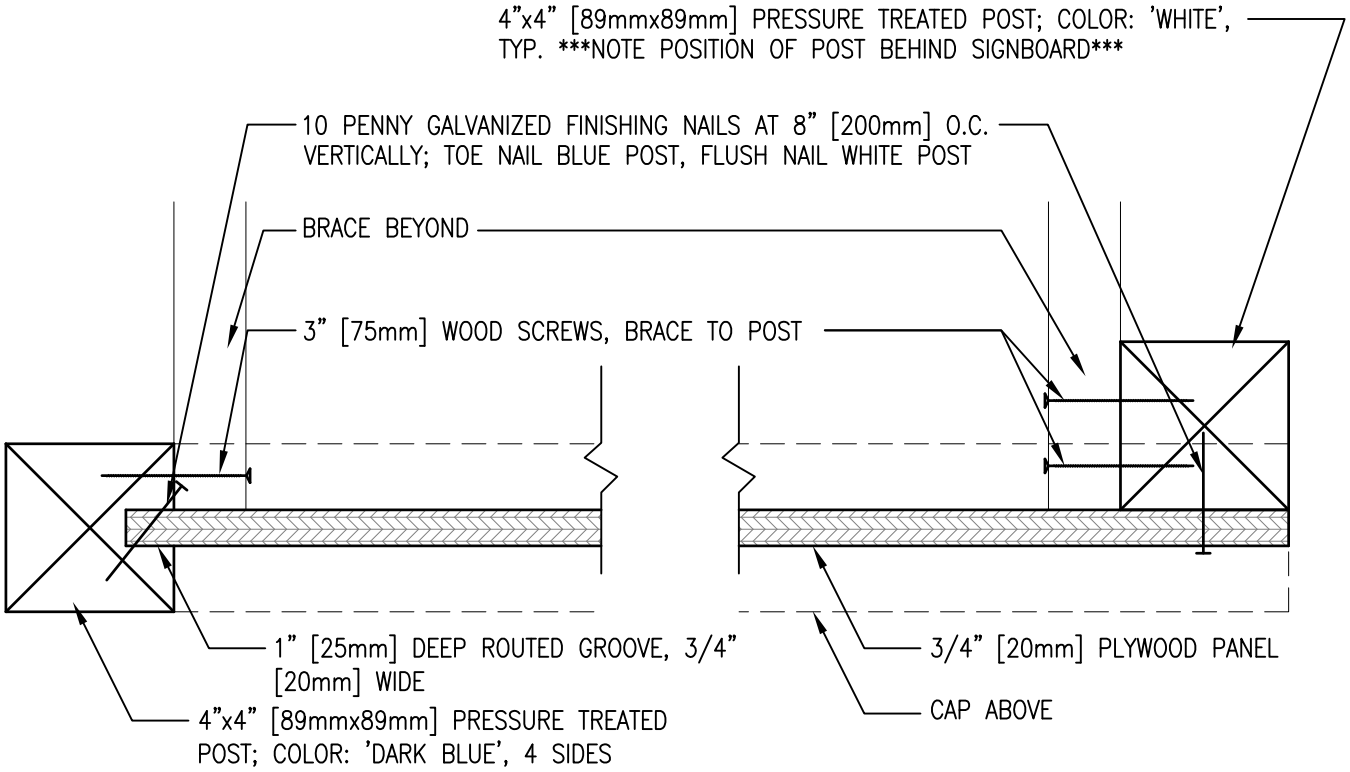

1 PLAN SECTION

1,2 | 4

SCALE: 3" = 1'-0"

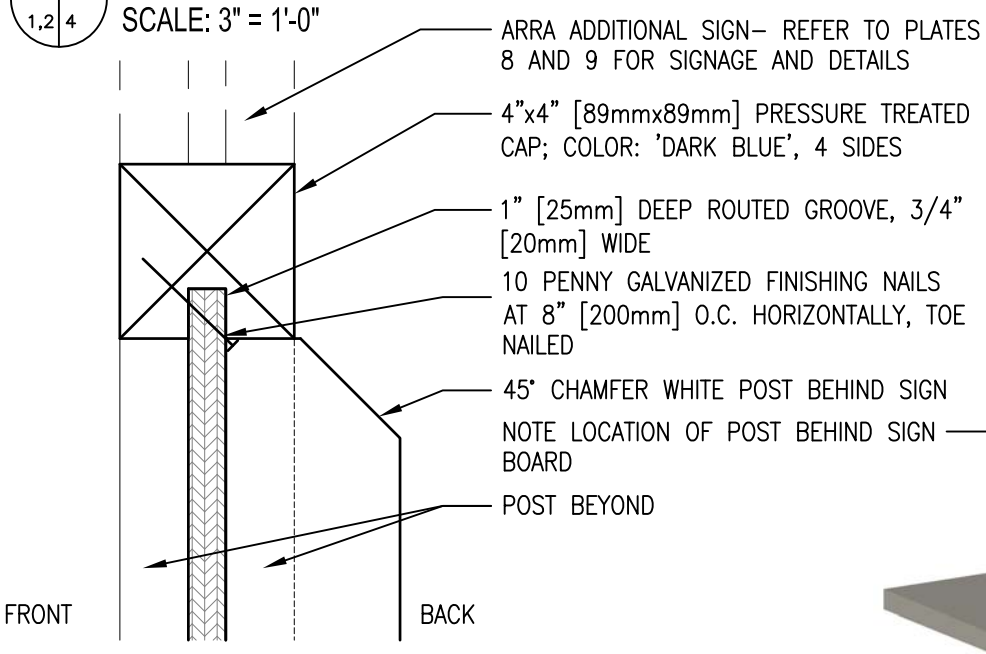

2 SECTION AT TOP

1,2 | 4

SCALE: 3" = 1'-0"

3 ISO VIEW

2 | 4

SCALE: NONE

PROJECT IDENTIFICATION SIGNBOARD SECTIONS

PLATE 4

THIS PAGE HAS BEEN INTENTIONALLY LEFT BLANK

SECTION 01 60 00.00 22

REQUIREMENTS FOR PESTICIDE AND HERBICIDE COORDINATION
09/14

PART 1 GENERAL

1.1 SUBMITTALS

Government approval is required for submittals with a "G" designation; submittals not having a "G" designation are for Contractor Quality Control approval. Submit the following in accordance with Section 01 33 00 SUBMITTAL PROCEDURES:

SD-07 Certificates

Certificate of North Carolina Licensed Applicator; G

SD-11 Closeout Submittals

Completed Field Pesticide/Herbicide Management Record Form; G

1.2 QUALITY ASSURANCE

1.2.1 Certificate of North Carolina Licensed Applicator

A North Carolina licensed applicator is required. Submit a copy of the certificate(s) to the Base Pest Management Coordinator (PMC) through the Contracting Officer.

PART 2 PRODUCTS

2.1 PESTICIDE/HERBICIDE LIST

The Contractor shall comply with Base Regulations and use only approved pesticides listed on the current "Approved Pesticide List for MCB Camp Lejeune NC". The attached document is current as of the date indicated but may be revised at any time. The approved list that is current at the time of application must be utilized. Contact the Contracting Officer to obtain the current approved list.

PART 3 EXECUTION

3.1 COORDINATION WITH BASE PEST MANAGEMENT COORDINATOR (PMC)

Contractor shall coordinate with the MCB Camp Lejeune PMC before proceeding with any pesticide/herbicide application.

3.2 Field Pesticide/Herbicide Management Record Form

Following the pesticide/herbicide application, the Contractor shall complete the attached Field Pesticide/Herbicide Management Record Form and submit to the Base Pest Management Coordinator (PMC) through the Contracting Officer. The completed form(s) shall be submitted within 15 days after application.

-- End of Section --

THIS PAGE HAS BEEN INTENTIONALLY LEFT BLANK

J-1503020-05

FIELD **PESTICIDE/HERBICIDE** MANAGEMENT RECORD FORM

Revised 24 October 2012

PROJECT / CONTRACT #:_____

Instructions: **A separate form will be filled out for EACH formulation at EACH location or building (if treating inside AND outside of a building, need two separate forms)**.

1. Date of Application:_____

2. Location: (Circle One) Inside or Outside

3. Building# and/or Name:_____

4. Type of Pest Control Operation:_____
   (i.e. Baiting, Power spray, Manual application of pesticide, ULV, etc.)

5. Site Description:_____
   (i.e. Office, Barracks, Housing, Warehouse, Snack Bar, Lawn, Unimproved Grounds, etc.)

6. Pest type: _____
   (i.e. Ants, Fire Ants, Cockroaches, Spiders, Termites, etc.)

7. **Contractor/Subcontractor's Company Name:_____**

8. Pesticide Used:
   8a. Pesticide Trade Name: _____

   8b. Pesticide Active Ingredient:_____

   8c. EPA Registration#:_____

   8d. Formulation (e.g., Liquid, Granular, Gel, EC, Aerosol, etc.)_____

9. Approximate total area treated: _____
   9a. Units: _____(i.e. SF, LF, AC, CF, EA(for baiting, aerosol cans), etc.)

10. Quantity of **Pesticide Concentrate** applied:_____
    10a. Units: _____(i.e. FLoz, DRoz, LB, Gal, Qt, Pint, Pkt, Bait Block, Bait Stations, Briquet, ML, LT, etc.)

11. **Quantity of Dilutant** Applied (if applicable):
    11a. **Type of Dilutant**: _____ (i.e. Water, Oil, etc.)
    11b. **Units**: _____ (i.e. Floz, Gal, LT, ML, etc.)

12. Comments: (Survey results, wind conditions, sanitation deficiencies, etc.)

_____

13. Print & Signature of Applicator:_____

14. Certification # of Applicator: _____

THIS PAGE HAS BEEN INTENTIONALLY LEFT BLANK

APPROVED PESTICIDE LIST FOR CAMP LEJEUNE NC

Per OPNAVINST 6250.4C "All personnel applying pesticides shall be certified"

IPM - APPENDIX E

Updated: 10 February 2015

EPA Reg #	Trade Name	Intended Use	REMARKS
***Approve	Must be secured inside tamper-resistant bait boxes		
100-1055	WeatherBlok XT (formerly 10182-339) (NOTE: Must be secured inside tamper-resistant bait boxes)	Rodenticide	Approve:certified applicators only
100-1091	Reward (NSN#6840-01-005-7523)	AQUATIC weeds	Approve:certified applicators only
100-1111	Archer	Roaches	Approve:certified applicators only
100-1134	Monument 75WG	Weeds	Approve:certified applicators only
100-1139	Barricade 4FL	Insecticide	Approve:certified applicators only
100-1218	Demon Max	Insecticide	Approve:certified applicators only
100-834	Barricade 65 WG	Crabgrass,weeds	Approve:certified applicators only
100-937	Primo MAXX	Growth Regulator	Approve:certified applicators only
10182-100	Demon WP	Insecticide	Approve:certified applicators only
10182-105	Demon EC	Insecticide/Gen Household	Approve:certified applicators only
10182-339	Weather Block (NOTE:Must be secured inside tamper-resistant bait boxes)	Rodenticide	Approve:certified applicators only
10182-361	Demand CS	Insecticide	Approve:certified applicators only
1021-1641-57056	Conquer	Insecticide	Approve:certified applicators only
1021-1691-149	TERRO ANT KILLER SPRAY T401 (16 oz) "issued to units thru SELF HELP 451-0072 (WO needed)"	Ants	Approve: SELF HELP or certified applicators only
1021-1815	Onslaught Microencapsulated Insecticide	Insecticide	Approve:certified applicators only
11540-1	ULD BP-300	Insecticide	Approve:certified applicators only
11540-9	ULD BP-100	Insecticide	Approve:certified applicators only
11649-7	Avitrol Whole Corn **(LABELED "RESTRICTED USE")**	Avicide	Approve:certified applicators only
12455-69	Contrac Bait (NOTE: use only OUTSIDE of bldgs)	Rodenticide	Approve:certified applicators only
12455-79	Contrac All Weather Bait Blocks (NSN#6840-01-501-2858)	Rodenticide	Approve:certified applicators only
12455-82	Contrac Blox (Super Size)	Rodenticide	Approve:certified applicators only
149-8-64405	Terro Ant Bait Gel	Insecticide	Approve:certified applicators only
1812-307	K-Tea	Algaecide	Approve:certified applicators only
19713-60	Simazine 4L	Weeds & Vines	Approve:certified applicators only

19713-623	Drexel Imitator Aquatic Herbicide	Aquatic Weeds	Approve:certified applicators only
2217-774	Gordans Brushmaster	Poison Ivy/Vines	Approve:certified applicators only
2217-833	SpeedZone	Weeds	Approve:certified applicators only
2217-835	Southern Speedzone	Weeds	Approve:certified applicators only
228-480	Polaris AC (G10 Aerial Spray approved 5/18/2010)	Herbicide	Approve:certified applicators only
228-534	Polaris	Herbicide	Approve:certified applicators only
228-675	Nufarm Diquat SPC 2 L	Aqautic Weeds	Approve:certified applicators only
241-322	Amdro Pro Fire Ant Granular Bait	Ants	Approve:certified applicators only
241-341	Pendulum	Herbicide	Approve:certified applicators only
241-372	Sahara DG Herbicide	Cracks, Concrete	Approve:certified applicators only
241-392	Phantom (NSN#6840-01-525-7139)	Insecticide	Approve:certified applicators only
241-426	Habitat (NSN#6840-01-532-5403) (NOTE:only MCAS is approved for use to control alligator weeds)	Herbicide	Approve:certified applicators only
241-430	Chopper Gen2 (approved for Wildlife)	Herbicide	Approve:certified applicators only
2724-274	Golden Malrin (NSN#6840-01-183-7244)	Flying insects	Approve:certified applicators only
2724-351	Gentrol IGR (NSN#6840-01-318-7416)	Roaches	Approve:certified applicators only
2724-404-50809	Petcor Flea Spray	IGR	Approve:certified applicators only
2724-490	Precor 2000 Plus / Premise	Insecticide	Approve:certified applicators only
279-3062	Dragnet	Insecticide	Approve:certified applicators only
279-3168	Talstar PL	Insecticide	Approve:certified applicators only
279-3206	Talstar One (Pre-treat for Termites)(NSN#6840-01-525-6888)	Insecticide	Approve:certified applicators only
3125-390	Tempo Ultra WP	Insecticide	Approve:certified applicators only
352-439	Escort XP	Kudzu	Approve:certified applicators only
352-627	Advion Fire Ant Bait Granular	Insecticide	Approve:certified applicators only
352-643	TranXit	Weeds	Approve:certified applicators only
352-652	Advion Cockroach Gel Bait	Insecticide/Roaches	Approve:certified applicators only
352-668	Advion Roach Arena	Roaches	Approve:certified applicators only
352-746	Advion Ant Gel Bait	Ants	Approve:certified applicators only
352-776	Arilon	Insecticide	Approve:certified applicators only
42750-29	Weed-Hoe 108	Weeds	Approve:certified applicators only

432-1217	TOP CHOICE Fire Ant / Fipronil (NSN#6840-01-585-9950)	Insecticide/Fire Ants	Approve:certified applicators only
432-1223	ProStar 70 WP	Fungicide	Approve:certified applicators only
432-1254	Maxforce Gel Bait	Roaches	Approve:certified applicators only
432-1256	Maxforce Ant Bait Stations (NSN#6840-01-298-1122)	Insecticide	Approve:certified applicators only
432-1257	Maxforce FC (Sml Roach)	Insecticide	Approve:certified applicators only
432-1264	Maxforce FC Ant Killer Bait Gel (NSN#6840-01-500-4579)	Insecticide	Approve:certified applicators only
432-1331	Premise (Pre Construction Insecticide)	Insecticide	Approve:certified applicators only
432-1332	Premise 75 / Centerfire 75 WSP	Termites	Approve:certified applicators only
432-1332-73748	Imaxx Pro	Insecticide	Approve:certified applicators only
432-1363	Bayer Tempo Ultra SC	Insecticide	Approve:certified applicators only
432-1375	Maxforce Fly Granular Bait (NSN#6840-01-518-5807)	Flying insects	Approve:certified applicators only
432-1391	Premise Foam	Termites	Approve:certified applicators only
432-1433	MaxForce FC Fire Ant Bait	Insecticide	Approve:certified applicators only
432-1455	Maxforce Fly Spot Bait (NSN#6840-01-555-9369)	Insecticide	Approve:certified applicators only
432-1460	Maxforce FC Magnum Roach Killer Bait Gel	Insecticide/Roaches	Approve:certified applicators only
432-1483	Temprid SC	Ants, Roaches	Approve:certified applicators only
432-1514	Suspend Polyzone	Insecticide	Approve:certified applicators only
432-716	SCOURGE **(LABELED "RESTRICTED USE")**	Insecticide	Approve:certified applicators only
432-763	Suspend SC	Ants	Approve:certified applicators only
432-772	Delta Dust (NSN#6840-01-431-3345)	Bees,Wasps,Hornets	Approve:certified applicators only
432-992	Drione Dust	Insecticide/Gen Household	Approve:certified applicators only
499-153	Whitmire Wasp Freeze	Insecticide	Approve:certified applicators only
499-290	PT 565 Plus XLO (NSN#6840-00-823-7849)	Roaches	Approve:certified applicators only
499-294	Avert Dry Flowable Cockroach Bait/ Whitmire AvertPT310 Abamectin Dust (NSN#6840-01-561-9766)	Insecticide/Roaches	Approve:certified applicators only
499-304	Cy-Kick CS Prescription Treatment	Insecticide	Approve:certified applicators only
499-310	Whitmire PT 566 Pyrethrum	Insecticide	Approve:certified applicators only
499-362	Wasp Freeze / Wasp Stopper II Plus / Whitmire PT 515 Wasp Freeze (NSN#6840-00-459-2243)	Wasps, bees, hornets	Approve:certified applicators only
499-385	Tri-Die	Insecticide	Approve:certified applicators only
499-404	Ultracide Flea IGR & Adulticide	Insecticide	Approve:certified applicators only

499-450	BP-100	Insecticide	Approve:certified applicators only
499-452	BP-300	Insecticide	Approve:certified applicators only
499-462	Pro-Control Plus	Insecticide	Approve:certified applicators only
499-465	Pro-Control	Insecticide	Approve:certified applicators only
499-470	Cy-Kick (NSN#6840-01-561-9717)	Insecticide	Approve:certified applicators only
499-473	Whitmire PT 221L Residual Insecticide	Insecticide	Approve:certified applicators only
499-527	PT Alpine Dust	Insecticide	Approve:certified applicators only
499-535	Cyhalocap CS	Pesticide	Approve:certified applicators only
499-540	Alpine Flea Insecticide	Insecticide	Approve:certified applicators only
499-561	Alpine WSG	Insecticide	Approve:certified applicators only
56-73	JT Eaton Boric Acid	Insecticide	Approve:certified applicators only
50404-5	Permethrin	Insecticide	Approve:certified applicators only
50534-202	Daconil Ultrex	Fungicide	Approve:certified applicators only
524-343	Aqua Master	AQUATIC Herbicide	Approve:certified applicators only
524-454	Honcho Plus Herbicide (G10 Aerial Spray approved 5/18/2010)	Weeds & Vines	Approve:certified applicators only
524-475	ROUND-UP PRO / Ranger Pro (NSN#6840-01-108-9578)	Herbicide/Weeds	Approve:certified applicators only
524-529	ROUND-UP PRO Concentrate	Herbicide/Weeds	Approve:certified applicators only
524-535	Quick Pro ROUND-UP (NSN#6840-01-399-0673)	Herbicide/Weeds	Approve:certified applicators only
524-549	ROUND-UP Powermax	Herbicide/Weeds	Approve:certified applicators only
53871-3	Stimukill Fly Bait	Insecticide	Approve:certified applicators only
53883-118	Bifenthrin	Insecticide	Approve:certified applicators only
53883-124	Bifen LP Granules	Insecticide	Approve:certified applicators only
53883-328	Fuse	Termiticide/Insecticide	Approve:certified applicators only
55809-3	Wasp & Hornet Killer Plus "Available SERVMART-GSA or issued to units thru SELF HELP 451-0071 (WO needed)"	Insecticide	Approve: SERVMART-GSA / SELF HELP or certified applicators only
58007-1	Ultrathon Insect Repellant	Insecticide	Approve:certified applicators only
59639-31	Orthene PCO Pellets	Insecticide	Approve:certified applicators only
6218-47	Mosquito Dunks	Insecticide	Approve:certified applicators only
62719-260	Crossbow Brush Killer	Weeds & Vines	Approve:certified applicators only
62719-324	Rodeo / Accord (NSN#6840-01-356-8893)	AQUATIC herbicide	Approve:certified applicators only

62719-40	GARLON 4 / Element 4	Kudzu	Approve:certified applicators only
62719-426	Dimension EC	Weeds	Approve:certified applicators only
62719-553	Garlon XRT (G10 Aerial Spray approved 5/18/2010)	Herbicide	Approve:certified applicators only
63120-1	Insect/Arthropod Repellent Fabric Treatment (NSN#6840-01-334-2666) (Note:PrevMed Use only)	Insecticide	Approve:certified applicators only
63120-3	Insect/Arthropod Repellent Fabric Treatment (NSN#6840-01-345-0237) (Note:PrevMed Use only)	Insecticide	Approve:certified applicators only
64248-10	Maxforce Ant Bait F1	Insecticide	Approve:certified applicators only
64248-14	Maxforce FC Roach Killer Bait Gel	Insecticide	Approve:certified applicators only
64248-6	Maxforce Ant Killer/Granular Bait	Insecticide	Approve:certified applicators only
64405-1	Bora-Care	Insect/Fungicide	Approve:certified applicators only
64405-2	Niban Fine Granular Bait	Fire Ants	Approve:certified applicators only
64405-8	Tim-Bor	Wood Destroying Fungi	Approve:certified applicators only
655-798	ExciteR	Insecticide	Approve:certified applicators only
655-802	Larva-Lur	Insecticide	Approve:certified applicators only
66222-22	PRAMITOL 25E (NSN#6840-00-145-0013)	Weeds	Approve:certified applicators only
67425-15	EcoPCO WPX	Insecticide	Approve:certified applicators only
6754-22-5802	Drione	Insecticide	Approve:certified applicators only
67760-34	Malathion	Insecticide	Approve:certified applicators only
6959-79	CESSCO 5 E	Insecticide	Approve:certified applicators only
71995-33	7113) "issued to units thru SELF HELP 451-0072 (WO needed)"	Weeds	Approve: SELF HELP or certified applicators only
71995-36	ROUND-UP READY TO USE-PLUS POISON IVY "issued to units thru SELF HELP 451-0072 (WO needed)"	Poison Ivy/Vines	Approve: SELF HELP or certified applicators only
72155-58	Tempo 2.5 SC Ultra	Insecticide	Approve:certified applicators only
73342-1	AMDRO Fire Ant Bait "issued to units thru SELF HELP 451-0072 (WO needed)"	Fire Ants	Approve: SELF HELP or certified applicators only
73342-6	AMDRO Fire Ant Bait	Fire Ants	Approve:certified applicators only
73079-2	In Tice granular bait	Roaches	Approve:certified applicators only
73079-4	BorActin Insecticide Powder	Insecticide	Approve:certified applicators only
73079-6	InTice Perimeter Baits	Insecticide	Approve:certified applicators only
73079-8	InTice Gelanimo Ant Bait	Insecticide	Approve:certified applicators only

7969-209	Termidor 80 WG (NSN#6840-01-483-3072)	Termites	Approve:certified applicators only
7969-210	Termidor SC T/L (NSN#6840-01-483-3068)	Termites	Approve:certified applicators only
7969-272	Drive XLR8	Grasses	Approve:certified applicators only
7969-285	PT Phantom Pressurized Insecticide	Insecticide	Approve:certified applicators only
8033-109-279	Transport Mikron	Insecticide	Approve:certified applicators only
81927-7	Alligare MSM 60 (Base Stables)	Herbicide	Approve:certified applicators only
81927-11	Triclopyr 4E	Kudzu	Approve:certified applicators only
8329-40	Biomist 1.5+7.5 ULV	Mosquitos	Approve:certified applicators only
83487-1	Uncle Albert's Super Smart Ant Bait	Insecticide	Approve:certified applicators only
901-82	d-Phenothrin	Insecticide	Approve:certified applicators only
9444-129	Borid	Insecticide	Approve:certified applicators only
9444-183	Intruder HPX Aerosol	Roaches	Approve:certified applicators only
9444-217	D-Force HPX (NSN#6840-01-561-9745)	Insecticide	Approve:certified applicators only
9688-187	TAT ANT & ROACH KILLER SPRAY (12 oz) "issued to units thru SELF HELP 451-0072 (WO needed)"	Ants/Roaches	Approve: SELF HELP or certified applicators only
9688-239-8845	HotShot Ultra LIQUID Roach Baits "issued to units thru SELF HELP 451-0072 (WO needed)"	Insecticide	Approve: SELF HELP or certified applicators only
9688-242-8845	HotShot Ultra LIQUID Ant Baits "issued to units thru SELF HELP 451-0072 (WO needed)"	Insecticide	Approve: SELF HELP or certified applicators only
	*****BELOW LIST DOES NOT REQUIRE CERTIFIED APPLICATORS (NOT REGULATED OR EXEMPT)*****		
FIFRA Exempt	Eco Exempt IC	Insecticide	Approve:certified applicators NOT required
Not regulated	Bac A Zap	Bacteria/Odor/Drain Fly	Approve:certified applicators NOT required
Not regulated	Deer Stopper Concentrate-Messina Wildlife	Deer	Locally approved:certified applicators NOT required
Not regulated	Osmocote Slow Release	Fertilizer not pesticide	Approve:certified applicators NOT required
Not regulated	Kleer-Out - Geraniol	Fire Ants	Locally approved:certified applicators NOT required
Not regulated	EcoSMART (Flying & Crawling Insects) (available thru SERVMART-GSA)	Flying & Crawling insects	Locally approved:SERVMART-GSA / certified applicators NOT required
Not regulated	Liquid Fertilizer	Housing area	Approve:certified applicators NOT required
Not regulated	Eco Exempt D	Insecticide	Approve:certified applicators NOT required
Not regulated	Eco Exempt G	Insecticide	Approve:certified applicators NOT required

Not regulated	Mosquito Barrier	Mosquitos	Approve:certified applicators NOT required
Not regulated	Allure Pheromone Moth Traps	Moth	Approve:certified applicators NOT required
Not regulated	StorGard Pheromone Traps	Moth	Approve:certified applicators NOT required
Not regulated	CatchMaster Glueboards	Rodents & Insects	Approve:certified applicators NOT required
Not regulated	Predascent (available thru SERVMART-GSA)	Snake Repellent	Approve:SERVMART-GSA / certified applicators NOT required
Not regulated	Pyrethiums	Fruit Bug	Approve:certified applicators NOT required
Not regulated	Cazamoscas Fly Catcher (Base Stables)	Flys	Approve:certified applicators NOT required
Not regulated	Snake-A-Way	Repellent	Approve:certified applicators NOT required

Camp Lejeune Pest Management Coordinator:
William Parkin (Environmental Management Department) (910) 451-7018 email william.parkin@usmc.mil
Link to the AUL for the PMP:
For External Site: http://www.lejeune.marines.mil/OfficesStaff/EnvironmentalMgmt/HazardousWasteMaterialManagement.aspx
For Internal Site :https://em.usmc.mil/sites/le/default.aspx

THIS PAGE HAS BEEN INTENTIONALLY LEFT BLANK

SECTION 01 74 19

CONSTRUCTION AND DEMOLITION WASTE MANAGEMENT
09/14

PART 1 GENERAL

1.1 REFERENCES

The publications listed below form a part of this specification to the extent referenced. The publications are referred to within the text by the basic designation only.

U.S. GREEN BUILDING COUNCIL (USGBC)

LEED BD+C	(2009; R 2010) Leadership in Energy and Environmental Design(tm) Building Design and Construction (LEED-NC)
LEED GBDC Ref Guide	(2009; R 2010) LEED Reference Guide for Green Building Design, Construction and Major Renovations of Commercial and Institutional Buildings including Core & Shell and K-12 Projects

1.2 GOVERNMENT POLICY

Government policy is to apply sound environmental principles in the design, construction and use of facilities. As part of the implementation of that policy the Contractor shall: (1) practice efficient waste management when sizing, cutting, and installing products and materials and (2) use all reasonable means to divert construction and demolition waste from landfills and incinerators and to facilitate their recycling or reuse. A minimum of 50 percent by weight of total project solid waste shall be diverted from the landfill.

1.3 MANAGEMENT

Develop and implement a waste management program. Take a pro-active, responsible role in the management of construction and demolition waste and require all subcontractors, vendors, and suppliers to participate in the effort. The Environmental Manager, as specified in Section 01 57 19.00 20 Temporary Environmental Controls, shall be responsible for instructing workers and overseeing and documenting results of the Waste Management Plan for the project. Construction and demolition waste includes products of demolition or removal, excess or unusable construction materials, packaging materials for construction products, and other materials generated during the construction process but not incorporated into the work. In the management of waste consideration shall be given to the availability of viable markets, the condition of the material, the ability to provide the material in suitable condition and in a quantity acceptable to available markets, and time constraints imposed by internal project completion mandates. The Contractor is responsible for implementation of any special programs involving rebates or similar incentives related to recycling of waste. Revenues or other savings obtained for salvage, or recycling accrue to the Contractor. Appropriately permit firms and facilities used for recycling, reuse, and disposal for the intended use to the extent required by federal, state, and local regulations. Also, provide on-site

instruction of appropriate separation, handling, recycling, salvage, reuse, and return methods to be used by all parties at the appropriate stages of the project.

1.4 SUBMITTALS

Government approval is required for submittals with a "G" designation; submittals not having a "G" designation are for Contractor Quality Control approval. The following shall be submitted in accordance with Section 01 33 00 SUBMITTAL PROCEDURES:

SD-01 Preconstruction Submittals

Waste Management Plan; G; (LEED BD+C)

SD-11 Closeout Submittals

Records; (LEED BD+C)

1.5 MEETINGS

Conduct Construction Waste Management meetings. After award of the Contract and prior to commencement of work, schedule and conduct a meeting with the Contracting Officer to discuss the proposed Waste Management Plan and to develop a mutual understanding relative to the details of waste management. The requirements for this meeting may be fulfilled during the coordination and mutual understanding meeting outlined in Section 01 45 00.00 20 QUALITY CONTROL. At a minimum, environmental and waste management goals and issues shall be discussed at the following additional meetings:

a. Pre-bid meeting.

b. Preconstruction meeting.

c. Regular site meetings.

d. Work safety meetings.

1.6 WASTE MANAGEMENT PLAN

A waste management plan shall be submitted within 15 days after contract award and not less than 10 days before the preconstruction meeting. The plan shall demonstrate how the project waste diversion goal shall be met and shall include the following:

a. Name of individuals on the Contractor's staff responsible for waste prevention and management.

b. Actions that will be taken to reduce solid waste generation, including coordination with subcontractors to ensure awareness and participation.

c. Description of the regular meetings to be held to address waste management.

d. Description of the specific approaches to be used in recycling/reuse of the various materials generated, including the areas on site and equipment to be used for processing, sorting, and temporary storage of wastes.

e. Characterization, including estimated types and quantities, of the waste to be generated.

f. Name of landfill and/or incinerator to be used and the estimated costs for use, assuming that there would be no salvage or recycling on the project.

g. Identification of local and regional reuse programs, including non-profit organizations such as schools, local housing agencies, and organizations that accept used materials such as materials exchange networks and Habitat for Humanity. Include the name, location, and phone number for each reuse facility to be used, and provide a copy of the permit or license for each facility.

h. List of specific waste materials that will be salvaged for resale, salvaged and reused on the current project, salvaged and stored for reuse on a future project, or recycled. Recycling facilities that will be used shall be identified by name, location, and phone number, including a copy of the permit or license for each facility.

i. Identification of materials that cannot be recycled/reused with an explanation or justification, to be approved by the Contracting Officer.

j. Description of the means by which any waste materials identified in item (h) above will be protected from contamination.

k. Description of the means of transportation of the recyclable materials (whether materials will be site-separated and self-hauled to designated centers, or whether mixed materials will be collected by a waste hauler and removed from the site).

l. Anticipated net cost savings determined by subtracting Contractor program management costs and the cost of disposal from the revenue generated by sale of the materials and the incineration and/or landfill cost avoidance.

Revise and resubmit Plan as required by the Contracting Officer. Approval of Contractor's Plan will not relieve the Contractor of responsibility for compliance with applicable environmental regulations or meeting project cumulative waste diversion requirement. Distribute copies of the Waste Management Plan to each subcontractor, the Quality Control Manager, and the Contracting Officer.

1.7 RECORDS

Records shall be maintained to document the quantity of waste generated; the quantity of waste diverted through sale, reuse, or recycling; and the quantity of waste disposed by landfill or incineration. Records shall be kept in accordance with the LEED GBDC Ref Guide and using the LEED BD+C Letter Template. Quantities may be measured by weight or by volume, but must be consistent throughout. List each type of waste separately noting the disposal or diversion date. Identify the landfill, recycling center, waste processor, or other organization used to process or receive the solid waste. Provide explanations for any waste not recycled or reused. With each application for payment, submit updated documentation for solid waste disposal and diversion, and submit manifests, weight tickets, receipts, and invoices specifically identifying the project and waste material. The records shall be made available to the Contracting Officer during

construction, and a copy of the records shall be delivered to the Contracting Officer upon completion of the construction and included in the LEED Documentation Notebook.

Demolition accomplished by other parties on this project site count toward the project's total waste diversion cumulative score for LEED BD+C. Information on the quantity and disposition of these materials will be provided by the Contracting Officer. Include this data in records, annotated to indicate that it was accomplished by another party.

1.8 COLLECTION

Separate, store, protect, and handle at the site identified recyclable and salvageable waste products in a manner that maximizes recyclability and salvagability of identified materials. Provide the necessary containers, bins and storage areas to facilitate effective waste management and clearly and appropriately identify them. Provide materials for barriers and enclosures around recyclable material storage areas which are nonhazardous and recyclable or reusable. Locate out of the way of construction traffic. Provide adequate space for pick-up and delivery and convenience to subcontractors. Recycling and waste bin areas are to be kept neat and clean, and recyclable materials shall be handled to prevent contamination of materials from incompatible products and materials. Clean contaminated materials prior to placing in collection containers. Use cleaning materials that are nonhazardous and biodegradable. Handle hazardous waste and hazardous materials in accordance with applicable regulations and coordinate with Section 01 57 19.00 20 TEMPORARY ENVIRONMENTAL CONTROLS. Separate materials by one of the following methods:

1.8.1 Source Separated Method.

Waste products and materials that are recyclable shall be separated from trash and sorted as described below into appropriately marked separate containers and then transported to the respective recycling facility for further processing. Deliver materials in accordance with recycling or reuse facility requirements (e.g., free of dirt, adhesives, solvents, petroleum contamination, and other substances deleterious to the recycling process). Separate materials into the following category types as appropriate to the project waste and to the available recycling and reuse programs in the project area:

a. Land clearing debris.

b. Asphalt.

c. Concrete and masonry.

d. Metal (e.g. banding, stud trim, ductwork, piping, rebar, roofing, other trim, steel, iron, galvanized, stainless steel, aluminum, copper, zinc, lead brass, bronze).

   (1) Ferrous.

   (2) Non-ferrous.

e. Wood (nails and staples allowed).

f. Debris.

g. Glass (colored glass allowed).

h. Paper.

(1) Bond.

(2) Newsprint.

(3) Cardboard and paper packaging materials.

i. Plastic.

(1) Type 1: Polyethylene Terephthalate (PET, PETE).

(2) Type 2: High Density Polyethylene (HDPE).

(3) Type 3: Vinyl (Polyvinyl Chloride or PVC).

(4) Type 4: Low Density Polyethylene (LDPE).

(5) Type 5: Polypropylene (PP).

(6) Type 6: Polystyrene (PS).

(7) Type 7: Other. Use of this code indicates that the package in question is made with a resin other than the six listed above, or is made of more than one resin listed above, and used in a multi-layer combination.

j. Gypsum.

k. Non-hazardous paint and paint cans.

l. Carpet.

m. Ceiling tiles.

n. Insulation.

o. Beverage containers.

1.8.2 Co-Mingled Method.

Waste products and recyclable materials shall be placed into a single container and then transported to a recycling facility where the recyclable materials are sorted and processed.

1.8.3 Other Methods.

Other methods proposed by the Contractor may be used when approved by the Contracting Officer.

1.9 DISPOSAL

Control accumulation of waste materials and trash. Recycle or dispose of collected materials off-site at intervals approved by the Contracting Officer and in compliance with waste management procedures. Except as otherwise specified in other sections of the specifications, disposal shall be in accordance with the following:

1.9.1 Reuse.

First consideration shall be given to salvage for reuse since little or no re-processing is necessary for this method, and less pollution is created when items are reused in their original form. Coordinate reuse with the Contracting Officer. Sale or donation of waste suitable for reuse shall be considered.

1.9.2 Recycle.

Waste materials not suitable for reuse, but having value as being recyclable, shall be made available for recycling. All fluorescent lamps, HID lamps, and mercury-containing thermostats removed from the site shall be recycled. Arrange for timely pickups from the site or deliveries to recycling facilities in order to prevent contamination of recyclable materials.

1.9.3 Compost

Consider composting on site if a reasonable amount of compostable material will be available. Compostable materials include plant material, sawdust, and certain food scraps.

1.9.4 Waste.

Materials with no practical use or economic benefit shall be disposed at a landfill or incinerator.

1.9.5 Return

Set aside and protect misdelivered and substandard products and materials and return to supplier for credit.

PART 2 PRODUCTS

Not used.

PART 3 EXECUTION

Not used.

-- End of Section --

SECTION 01 78 00

CLOSEOUT SUBMITTALS
09/14

PART 1 GENERAL

1.1 REFERENCES

The publications listed below form a part of this specification to the extent referenced. The publications are referred to within the text by the basic designation only.

ASTM INTERNATIONAL (ASTM)

ASTM E1971	(2005; R 2011) Stewardship for the Cleaning of Commercial and Institutional Buildings

GREEN SEAL (GS)

GS-37	(2012) Cleaning Products for Industrial and Institutional Use

U.S. DEPARTMENT OF DEFENSE (DOD)

UFC 1-300-08	(2009, with Change 2) Criteria for Transfer and Acceptance of DoD Real Property

1.2 SUBMITTALS

Government approval is required for submittals with a "G" designation; submittals not having a "G" designation are for Contractor Quality Control approval. Submit the following in accordance with Section 01 33 00 SUBMITTAL PROCEDURES:

SD-03 Product Data

As-Built Record of Equipment and Materials
Warranty Management Plan
Warranty Tags
Final Cleaning
Spare Parts Data

SD-08 Manufacturer's Instructions

Preventative Maintenance
Condition Monitoring (Predictive Testing)
Inspection
Posted Instructions

SD-10 Operation and Maintenance Data

Operation and Maintenance Manuals

SD-11 Closeout Submittals

Record Drawings
NAVFAC Sustainable & Energy Data Record Card; G
Certification of EPA Designated Items; G
Preliminary Interim DD Form 1354; G
Updated Interim DD Form 1354; G

1.3 PROJECT RECORD DOCUMENTS

1.3.1 Record Drawings

Drawings showing final as-built conditions of the project. This paragraph covers record drawings complete, as a requirement of the contract. The terms "drawings," "contract drawings," "drawing files," "working record drawings" and "final record drawings" refer to contract drawings which are revised to be used for final record drawings showing as-built conditions. The final CAD record drawings must consist of one set of electronic CAD drawing files in the specified format, 2 sets of prints, and one set of the approved working Record drawings.

1.3.1.1 Government Furnished Materials

One set of electronic CADD files in the specified software and format revised to reflect all bid amendments will be provided by the Government at the preconstruction conference for projects requiring CADD file record drawings.

1.3.1.2 Working Record and Final Record Drawings

Revise 2 sets of paper drawings by red-line process to show the as-built conditions during the prosecution of the project. Keep these working as-built marked drawings current on a weekly basis and at least one set available on the jobsite at all times. Changes from the contract plans which are made in the work or additional information which might be uncovered in the course of construction must be accurately and neatly recorded as they occur by means of details and notes. Prepare final record (as-built) drawings after the completion of each definable feature of work as listed in the Contractor Quality Control Plan (Foundations, Utilities, Structural Steel, etc., as appropriate for the project). The working as-built marked prints and final record (as-built) drawings will be jointly reviewed for accuracy and completeness by the Contracting Officer and the Contractor prior to submission of each monthly pay estimate. If the Contractor fails to maintain the working and final record drawings as specified herein, the Contracting Officer will deduct from the monthly progress payment an amount representing the estimated cost of maintaining the record drawings. This monthly deduction will continue until an agreement can be reached between the Contracting Officer and the Contractor regarding the accuracy and completeness of updated drawings. Show on the working and final record drawings, but not limited to, the following information:

a. The actual location, kinds and sizes of all sub-surface utility lines. In order that the location of these lines and appurtenances may be determined in the event the surface openings or indicators become covered over or obscured, show by offset dimensions to two permanently fixed surface features the end of each run including each change in direction on the record drawings. Locate valves, splice boxes and similar appurtenances by dimensioning along the utility run from a reference point. Also record the average depth below the surface of each run.

b. The location and dimensions of any changes within the building structure.

c. Correct grade, elevations, cross section, or alignment of roads, earthwork, structures or utilities if any changes were made from contract plans.

d. Changes in details of design or additional information obtained from working drawings specified to be prepared and/or furnished by the Contractor; including but not limited to fabrication, erection, installation plans and placing details, pipe sizes, insulation material, dimensions of equipment foundations, etc.

e. The topography, invert elevations and grades of drainage installed or affected as part of the project construction.

f. Changes or modifications which result from the final inspection.

g. Where contract drawings or specifications present options, show only the option selected for construction on the final as-built prints.

h. If borrow material for this project is from sources on Government property, or if Government property is used as a spoil area, furnish a contour map of the final borrow pit/spoil area elevations.

i. Systems designed or enhanced by the Contractor, such as HVAC controls, fire alarm, fire sprinkler, and irrigation systems.

j. Modifications (include within change order price the cost to change working and final record drawings to reflect modifications) and compliance with the following procedures.

(1) Follow directions in the modification for posting descriptive changes.

(2) Place a Modification Delta at the location of each deletion.

(3) For new details or sections which are added to a drawing, place a Modification Delta by the detail or section title.

(4) For minor changes, place a Modification Delta by the area changed on the drawing (each location).

(5) For major changes to a drawing, place a Modification Delta by the title of the affected plan, section, or detail at each location.

(6) For changes to schedules or drawings, place a Modification Delta either by the schedule heading or by the change in the schedule.

(7) The Modification Delta size shall be 1/2 inch diameter unless the area where the circle is to be placed is crowded. Smaller size circle shall be used for crowded areas.

1.3.1.3 Drawing Preparation

Modify the record drawings as may be necessary to correctly show the features of the project as it has been constructed by bringing the contract set into agreement with approved working as-built prints, and adding such additional drawings as may be necessary. These working as-built marked

prints must be neat, legible and accurate. These drawings are part of the permanent records of this project and must be returned to the Contracting Officer after approval by the Government. Any drawings damaged or lost by the Contractor must be satisfactorily replaced by the Contractor at no expense to the Government.

1.3.1.4 Computer Aided Design and Drafting (CADD) Drawings

Only employ personnel proficient in the preparation of CADD drawings to modify the contract drawings or prepare additional new drawings. Additions and corrections to the contract drawings must be equal in quality and detail to that of the originals. Line colors, line weights, lettering, layering conventions, and symbols must be the same as the original line colors, line weights, lettering, layering conventions, and symbols. If additional drawings are required, prepare them using the specified electronic file format applying the same graphic standards specified for original drawings. The title block and drawing border to be used for any new final record drawings must be identical to that used on the contract drawings. Accomplish additions and corrections to the contract drawings using CADD files. The Contractor will be furnished "as-designed" drawings in AutoCad Release 2010 format compatible with a Windows 7 operating system. The electronic files will be supplied on compact disc, read-only memory (CD-ROM). Provide all program files and hardware necessary to prepare final record drawings. The Contracting Officer will review final record drawings for accuracy and return them to the Contractor for required corrections, changes, additions, and deletions.

a. Provide CADD "base" colors of red, green, and blue. Color code for changes as follows:

   (1) Deletions (Red) - Over-strike deleted graphic items (lines), lettering in notes and leaders.

   (2) Additions (Green) - Added items, lettering in notes and leaders.

   (3) Special (Blue) - Items requiring special information, coordination, or special detailing or detailing notes.

b. Rename the Contract Drawing files in a manner related to the contract number (i.e., 98-C-10.DGN) as instructed in the Pre-Construction conference. Use only those renamed files for the Marked-up changes. All changes shall be made on the layer/level as the original item.

c. When final revisions have been completed, show the wording "RECORD DRAWINGS / AS-BUILT CONDITIONS" followed by the name of the Contractor in letters at least 3/16 inch high on the cover sheet drawing. Mark all other contract drawings either "Record" drawing denoting no revisions on the sheet or "Revised Record" denoting one or more revisions. Date original contract drawings in the revision block.

d. Within 20 days for contracts $5 million and above after Government approval of all of the working record drawings for a phase of work, prepare the final CADD record drawings for that phase of work and submit two sets of blue-lined prints of these drawings for Government review and approval. The Government will promptly return one set of prints annotated with any necessary corrections. Within 10 days for contracts $5 million and above revise the CADD files accordingly at no additional cost and submit one set of final prints for the completed phase of work to the Government. Within 20 days for contracts $5

million and above of substantial completion of all phases of work, submit the final record drawing package for the entire project. Submit one set of electronic files on compact disc, read-only memory (CD-ROM), one set of mylars, two sets of blue-line prints and one set of the approved working record drawings. They must be complete in all details and identical in form and function to the contract drawing files supplied by the Government. Any transactions or adjustments necessary to accomplish this is the responsibility of the Contractor. The Government reserves the right to reject any drawing files it deems incompatible with the customer's CADD system. Paper prints, drawing files and storage media submitted will become the property of the Government upon final approval. Failure to submit final record drawing files and marked prints as specified will be cause for withholding any payment due the Contractor under this contract. Approval and acceptance of final record drawings must be accomplished before final payment is made to the Contractor.

1.3.1.5 Payment

No separate payment will be made for record drawings required under this contract, and all costs accrued in connection with such drawings are considered a subsidiary obligation of the Contractor.

1.3.2 As-Built Record of Equipment and Materials

Furnish one copy of preliminary record of equipment and materials used on the project 15 days prior to final inspection. This preliminary submittal will be reviewed and returned 2 days after final inspection with Government comments. Submit Two sets of final record of equipment and materials 10 days after final inspection. Key the designations to the related area depicted on the contract drawings. List the following data:

RECORD OF DESIGNATED EQUIPMENT AND MATERIALS DATA

Description	Specification Section	Manufacturer and Catalog, Model, and Serial Number	Composition and Size	Where Used

1.3.3 Final Approved Shop Drawings

Furnish final approved project shop drawings 30 days after transfer of the completed facility.

1.3.4 Construction Contract Specifications

Furnish final record (as-built) construction contract specifications, including modifications thereto, 30 days after transfer of the completed facility.

1.3.5 Real Property Equipment

Furnish a list of installed equipment furnished under this contract. Include all information usually listed on manufacturer's name plate. In the "EQUIPMENT-IN-PLACE LIST" include, as applicable, the following for each piece of equipment installed: description of item, location (by room

number), model number, serial number, capacity, name and address of manufacturer, name and address of equipment supplier, condition, spare parts list, manufacturer's catalog, and warranty. Furnish a draft list at time of transfer. Furnish the final list 30 days after transfer of the completed facility.

1.4 SPARE PARTS DATA

Submit two copies of the Spare Parts Data list.

a. Indicate manufacturer's name, part number, nomenclature, and stock level required for maintenance and repair. List those items that may be standard to the normal maintenance of the system.

1.5 PREVENTATIVE MAINTENANCE

Submit Preventative Maintenance, Condition Monitoring (Predictive Testing) and Inspection schedules with instructions that state when systems should be retested.

a. Define the anticipated length of each test, test apparatus, number of personnel identified by responsibility, and a testing validation procedure permitting the record operation capability requirements within the schedule. Provide a signoff blank for the Contractor and Contracting Officer for each test feature; e.g., gpm, rpm, psi. Include a remarks column for the testing validation procedure referencing operating limits of time, pressure, temperature, volume, voltage, current, acceleration, velocity, alignment, calibration, adjustments, cleaning, or special system notes. Delineate procedures for preventative maintenance, inspection, adjustment, lubrication and cleaning necessary to minimize corrective maintenance and repair.

b. Repair requirements must inform operators how to check out, troubleshoot, repair, and replace components of the system. Include electrical and mechanical schematics and diagrams and diagnostic techniques necessary to enable operation and troubleshooting of the system after acceptance.

1.6 CERTIFICATION OF EPA DESIGNATED ITEMS

Submit the Certification of EPA Designated Items as required by FAR 52.223-9, "Certification and Estimate of Percentage of Recovered Material Content for EPA Designated Items". Include on the certification form the following information: project name, project number, Contractor name, license number, Contractor address, and certification. The certification will read as follows and be signed and dated by the Contractor. "I hereby certify the information provided herein is accurate and that the requisition/procurement of all materials listed on this form comply with current EPA standards for recycled/recovered materials content. The following exemptions may apply to the non-procurement of recycled/recovered content materials: 1) The product does not meet appropriate performance standards; 2) The product is not available within a reasonable time frame; 3) The product is not available competitively (from two or more sources); 4) The product is only available at an unreasonable price (compared with a comparable non-recycled content product)." Record each product used in the project that has a requirement or option of containing recycled or biobased content in accordance with Section 01 33 29 SUSTAINABILITY REPORTING, noting total price, total value of post-industrial recycled content, total value of post-consumer recycled content, total value of biobased content,

exemptions (1, 2, 3, or 4, as indicated), and comments. Recycled and biobased content values may be determined by weight or volume percent, but must be consistent throughout.

1.7 WARRANTY MANAGEMENT

1.7.1 Warranty Management Plan

Develop a warranty management plan which contains information relevant to the clause Warranty of Construction. At least 30 days before the planned pre-warranty conference, submit one set of the warranty management plan. Include within the warranty management plan all required actions and documents to assure that the Government receives all warranties to which it is entitled. The plan must be in narrative form and contain sufficient detail to render it suitable for use by future maintenance and repair personnel, whether tradesmen, or of engineering background, not necessarily familiar with this contract. The term "status" as indicated below must include due date and whether item has been submitted or was accomplished. Warranty information made available during the construction phase must be submitted to the Contracting Officer for approval prior to each monthly pay estimate. Assemble approved information in a binder and turn over to the Government upon acceptance of the work. The construction warranty period will begin on the date of project acceptance and continue for the full product warranty period. A joint 4 month and 9 month warranty inspection will be conducted, measured from time of acceptance, by the Contractor, Contracting Officer and the Customer Representative. Include within the warranty management plan, but not limited to, the following:

a. Roles and responsibilities of all personnel associated with the warranty process, including points of contact and telephone numbers within the organizations of the Contractors, Subcontractors, manufacturers or suppliers involved.

b. Furnish with each warranty the name, address, and telephone number of each of the guarantor's representatives nearest to the project location.

c. Listing and status of delivery of all Certificates of Warranty for extended warranty items, to include roofs, HVAC balancing, pumps, motors, transformers, and for all commissioned systems such as fire protection and alarm systems, sprinkler systems, lightning protection systems, etc.

d. A list for each warranted equipment, item, feature of construction or system indicating:

    (1) Name of item.
    (2) Model and serial numbers.
    (3) Location where installed.
    (4) Name and phone numbers of manufacturers or suppliers.
    (5) Names, addresses and telephone numbers of sources of spare parts.
    (6) Warranties and terms of warranty. Include one-year overall warranty of construction, including the starting date of warranty of construction. Items which have extended warranties must be indicated with separate warranty expiration dates.
    (7) Cross-reference to warranty certificates as applicable.
    (8) Starting point and duration of warranty period.
    (9) Summary of maintenance procedures required to continue the warranty in force.
    (10) Cross-reference to specific pertinent Operation and Maintenance

manuals.

(11) Organization, names and phone numbers of persons to call for warranty service.

(12) Typical response time and repair time expected for various warranted equipment.

e. The Contractor's plans for attendance at the 4 and 9 month post-construction warranty inspections conducted by the Government.

f. Procedure and status of tagging of all equipment covered by extended warranties.

g. Copies of instructions to be posted near selected pieces of equipment where operation is critical for warranty and/or safety reasons.

1.7.2 Performance Bond

The Contractor's Performance Bond must remain effective throughout the construction period.

a. In the event the Contractor fails to commence and diligently pursue any construction warranty work required, the Contracting Officer will have the work performed by others, and after completion of the work, will charge the remaining construction warranty funds of expenses incurred by the Government while performing the work, including, but not limited to administrative expenses.

b. In the event sufficient funds are not available to cover the construction warranty work performed by the Government at the Contractor's expense, the Contracting Officer will have the right to recoup expenses from the bonding company.

c. Following oral or written notification of required construction warranty repair work, respond in a timely manner. Written verification will follow oral instructions. Failure of the Contractor to respond will be cause for the Contracting Officer to proceed against the Contractor.

1.7.3 Pre-Warranty Conference

Prior to contract completion, and at a time designated by the Contracting Officer, meet with the Contracting Officer to develop a mutual understanding with respect to the requirements of this section. Communication procedures for Contractor notification of construction warranty defects, priorities with respect to the type of defect, reasonable time required for Contractor response, and other details deemed necessary by the Contracting Officer for the execution of the construction warranty will be established/reviewed at this meeting. In connection with these requirements and at the time of the Contractor's quality control completion inspection, furnish the name, telephone number and address of a licensed and bonded company which is authorized to initiate and pursue construction warranty work action on behalf of the Contractor. This point of contact will be located within the local service area of the warranted construction, be continuously available, and be responsive to Government inquiry on warranty work action and status. This requirement does not relieve the Contractor of any of its responsibilities in connection with other portions of this provision.

1.7.4 Warranty Tags

At the time of installation, tag each warranted item with a durable, oil and water resistant tag approved by the Contracting Officer. Attach each tag with a copper wire and spray with a silicone waterproof coating. Also, submit two record copies of the warranty tags showing the layout and design. The date of acceptance and the QC signature must remain blank until the project is accepted for beneficial occupancy. Show the following information on the tag.

Type of
product/material
Model number

Serial number

Contract number

Warranty period from/to

Inspector's signature

Construction Contractor

Address

Telephone number

Warranty contact

Address

Telephone number

Warranty response time
priority code
WARNING - PROJECT PERSONNEL TO PERFORM ONLY OPERATIONAL MAINTENANCE DURING THE WARRANTY PERIOD.

1.8 COMMISSIONING

1.8.1 Building Commissioning

All contract requirements for building commissioning shall be completed prior to contract completion.

1.8.2 HVAC Commissioning

All contract requirements of Section 23 08 00.00 10 COMMISSIONING OF HVAC SYSTEMS must be fully completed, including all testing concurrent with Building Commissioning. All contract requirements of Section 23 05 93 TESTING, ADJUSTING AND BALANCING must be fully completed, including testing and inspection, prior to HVAC commissioning, except as noted otherwise in Section 23 05 93. All contract requirements of Section 23 09 23.13 22 BACnet DIRECT DIGITAL CONTROL SYSTEMS FOR HVAC must be fully completed,

including all testing, prior to HVAC commissioning. The time required to complete all work and testing as prescribed by Sections 23 08 00.00 22, 23 09 23.13 22, and 23 05 93 is included in the allotted calendar days for completion.

1.9 OPERATION AND MAINTENANCE MANUALS

Submit 6 copies of the project operation and maintenance manuals 30 calendar days prior to testing the system involved. Update and resubmit data for final approval no later than 30 calendar days prior to contract completion.

1.9.1 Configuration

Operation and Maintenance Manuals must be consistent with the manufacturer's standard brochures, schematics, printed instructions, general operating procedures, and safety precautions. Bind information in manual format and grouped by technical sections. Test data must be legible and of good quality. Light-sensitive reproduction techniques are acceptable provided finished pages are clear, legible, and not subject to fading. Pages for vendor data and manuals must have 0.3937-inch holes and be bound in 3-ring, loose-leaf binders. Organize data by separate index and tabbed sheets, in a loose-leaf binder. Binder must lie flat with printed sheets that are easy to read. Caution and warning indications must be clearly labeled.

1.9.2 Training and Instruction

Submit classroom and field instructions in the operation and maintenance of systems equipment where required by the technical provisions. These services must be directed by the Contractor, using the manufacturer's factory-trained personnel or qualified representatives. Contracting Officer will be given 7 calendar days written notice of scheduled instructional services. Instructional materials belonging to the manufacturer or vendor, such as lists, static exhibits, and visual aids, must be made available to the Contracting Officer.

1.10 CLEANUP

Provide final cleaning in accordance with ASTM E1971 and submit two copies of the listing of completed final clean-up items. Leave premises "broom clean." Comply with GS-37 for general purpose cleaning and bathroom cleaning. Use only nonhazardous cleaning materials, including natural cleaning materials, in the final cleanup. Clean interior and exterior glass surfaces exposed to view; remove temporary labels, stains and foreign substances; polish transparent and glossy surfaces; vacuum carpeted and soft surfaces. Clean equipment and fixtures to a sanitary condition. Replace filters of operating equipment and comply with the Indoor Air Quality (IAQ) Management Plan. Clean debris from roofs, gutters, downspouts and drainage systems. Sweep paved areas and rake clean landscaped areas. Remove waste and surplus materials, rubbish and construction facilities from the site. Recycle, salvage, and return construction and demolition waste from project in accordance with the Waste Management Plan. Promptly and legally transport and dispose of any trash. Do not burn, bury, or otherwise dispose of trash on the project site.

1.11 REAL PROPERTY RECORD

DD Form 1354 "Transfer and Acceptance of Military Real Property" is

utilized to record and maintain the Base's real property inventory and to manage capital improvements costs.

A Draft DD Form 1354 is attached to this section. Note: The Draft DD Form 1354 will not contain cost or quantity information. The Contractor shall provide this information based on "as constructed" conditions.

Near the completion of the project, but a minimum of 60 days prior to the projected Beneficial Occupancy Date (BOD), update the Draft DD Form 1354 and submit a Preliminary Interim DD Form 1354, accounting for all installed property. Required data will include costs, quantities, units of measure, etc. as indicated on the DD Form 1354. Include any additional assets/improvements/alterations from the Draft DD Form 1354. An Excel version of this document can be provided by the Government for use in providing this data. Contact the Contracting Officer for any project specific information necessary to complete the DD Form 1354.

The DD Form 1354 shall be prepared in accordance with UFC 1-300-08, available at http://www.wbdg.org/ccb/browse_cat.php?o=29&c=4.

Submit an Updated Interim DD Form 1354 for approval with the Final Invoice. The Updated Interim DD Form 1354 shall address all requested revisions to the Preliminary Interim DD Form 1354 and shall be updated to contain Contractor's "Final" quantity and cost information.

The Final DD Form 1354 will be prepared by the Activity Real Property Accountability Officer (RPAO) at final project closeout after all outstanding issues have been resolved. The Final DD Form 1354 will be prepared using the Contractor provided project data.

1.11.1 MCB Camp Lejeune / MCAS New River

Point of Contact (POC) for assistance in completing the DD Form 1354:

Facilities Planner
Installation Dev Div/Fac Planning Branch
Building 12 Marine Corps Base
PSC Box 20004
Camp Lejeune, NC 28542-0004
Phone: (910) 451-1833

Coordinate with Section 01 20 00.00 20 PRICE AND PAYMENT PROCEDURES paragraph "EARNED VALUE REPORT".

The Contractor's Earned Value Report shall allocate the total cost of construction to the appropriate category codes. If a supporting facility feature has a unique category code, it shall be listed separately on the DD Form 1354. If a supporting facility does not have a unique category code the costs associated with the feature shall be included in the primary facility cost.

When documenting demolition work, the DD Form 1354 shall list the quantitative data associated with this work as a negative value to show the costs should be deleted from the Navy Asset Data Store. Coordinate with the POCs listed above in determining the negative value for demolition work.

The Contractor shall complete DD Form 1354 to the satisfaction of the Installation Development Division of MCB Camp Lejeune.

1.12 GEOSPATIAL INFORMATION SYSTEMS (GIS) DELIVERABLES

Provide geospatial data and documents for all features added, demolished or modified as part of this project in accordance with Section 01 78 30.00 22 DIGITAL DATA DELIVERABLES (GIS).

1.13 NAVFAC SUSTAINABLE & ENERGY DATA RECORD CARD

Within 60 days of the completion of Project, complete an electronic copy of the NAVFAC Sustainable & Energy Data Record Card, and submit to the Contracting Officer. Draft Record card for this project should be available from Designer of Record (DOR) or Contracting Officer. Instructions and a blank DD Form (fill-able) in ADOBE (PDF) may be obtained at the Whole Building Design Guide web site by navigating: Home > Participating Agencies > Department of Defense (DoD) > NAVFAC Sustainable Development Program > Contract Documents > NAVFAC Sustainable & Energy Data Record Card; or directly at http://www.wbdg.org/pdfs/navfac_sustainable_energy_data_record_card.pdf.

PART 2 PRODUCTS

Not Used.

PART 3 EXECUTION

Not Used.

-- End of Section --

TITLE: SOF INTEL OPS EXPANSION, MCB CAMP LEJEUNE, NC (15P1396)

TRANSFER AND ACCEPTANCE OF MILITARY REAL PROPERTY

Form Approved
OMB No. 0704-0188

The public reporting burden for the collection of information is estimated to average 30 minutes per response, including the time for reviewing instructions, searching existing data sources, gathering and maintaining the data needed and completing and reviewing the collection of information. Send comments regarding this burden estimate or any other aspect of this collection of information, including suggestions for reducing the burden, to the Department of Defense, Executive Services and Communications Directorate (0704-0188). Respondents should be aware that notwithstanding any other provision of law, no person shall be subject to any penalty for failing to comply with a collection of information if it does not display a currently valid OMB control number.

PLEASE DO NOT RETURN YOUR COMPLETED FORM TO THE ABOVE ORGANIZATION

1. FROM (Installation/Activity/District and ZIP Code)	2. DATE PREPARED (YYYYMMDD)	3. PROJECT/JOB NUMBER	4. SERIAL NUMBER	8. TRANSACTION DETAILS
	20141218	15P1396		a. ☑ NEW CONST. ☐ EXISTING FAC. ☐ CAPITAL IMP. ☐ OTHER (Specify)
5. TO (Installation/Activity/Service, ZIP Code & INSNO) COMMANDING GENERAL ATTN: PUBLIC WORKS DIVISION MARINE CORPS BASE PSC BOX 20004 CAMP LEJEUNE, NC 28542-0004	6. SITE/INSN0/ NAME M67001	7. CONTRACT NUMBER(S)	7a. PLACED-IN-SERVICE DATE (YYYYMMDD)	b. ☐ PHYS. COM. AVAIL. ☐ BENF/O ☐ PARTIAL BOD ☐ FINANCIAL COM. ☐ OTHER (Specify) c. ☑ DRAFT ☐ FINAL ☐ INTERIM d. EFFECTIVE DATE (YYYYMMDD)

9. ITEM NO.	10a. FACILITY NO.	10b. RPUID	11. CATEGORY CODE	12. CATCODE DESCRIPTION	13. TYPE CODE	AREA 14. UNIT OF MEAS 1	AREA 15. TOTAL QUANTITY UM 1	OTHER 16. UNIT OF MEAS 2	OTHER 17. TOTAL QUANTITY UM2	18. COST	19. FUND SOURCE	20. FUND ORG	21. INTER-EST CODE	22. ITEM REMARKS
1			13117	TELECOMMUNICATIONS CENTER										
2			13510	COMMUNICATION-LINES - OTHER THAN TELEPHONE										
3			13520	TELEPHONE LINES										
4			14365	OPERATIONS CONTROL CENTER										
5														
6														
7			81220	STREET LIGHTING										

23a. TRANSFERRED BY (Typed Name and Signature)	23b. DATE SIGNED (YYYYMMDD)	24a. ACCEPTED BY (Typed Name and Signature)	24b. DATE SIGNED (YYYYMMDD)
23c. TITLE (Area Engr./Base Engr./DPW)		24c. TITLE (DPW/RPAO)	25. PROPERTY VOUCHER NUMBER

26. CONSTRUCTION DEFICIENCIES (attach blank sheet for continuations)

THIRD MEASUREMENT =

NOTE: THE ATTACHED SUPPORT FACILITY NUMBERS AND CATCODES ARE NOT ALL INCLUSIVE. THEY ARE LISTED HERE AS A COURTESY ONLY.

27. PROJECT REMARKS (attach blank sheet for continuation)

Height: Width: Length: Regular:

S & A Cost:
Construction Cost:
Subtotal:
Equipment Cost:
Total Project Cost:

DD 1354 Prepared by

INSTRUCTIONS

GENERAL. This form has been designed and issued for use in connection with the transfer of military real property between the military departments and to or from other government agencies. It supersedes ENG Forms 290 and 290B (formerly used by the Army and Air Force) and NAVDOCKS Form 2317 (formerly used by the Navy).

Existing instructions issued by the military departments relative the the preparation of DD Form 1354 are applicable to this revised form to the extent that the various items and columns on the superseded forms have been retained. The military departments may promulgate additional instructions, as appropriate.

For detailed instructions on how to fill out this form, please refer to Unified Facilities Criteria (UFC) 1-300-08, dated 16 April 2009 or later.

SPECIFIC DATA ITEMS.

1. From. Name and address of the transferring agency.

2. Date Prepared. Date of actual preparation. Enter all dates in YYYYMMDD format (Example: March 31, 2004 = 20040331).

3. Project/Job Number. Project number on a DD Form 1354 or Individual Job Order Number.

4. Serial Number. Sequential serial number assigned by the preparing organization. (e.g., 2004-0001).

5. To. Name and address of the receiving installation, activity, and service of the Real Property Accountable Officer (RPAO).

6. Site/INSNO and Name. Site or installation number and site name where the constructed facility is located.

7. Contract Number(s). Contract number(s) for this project.

7a. Placed-In-Service Date. RPA Placed In Service Date. This is the date the asset is actually placed-in-service.

8. Transaction Details.

a. Type of Transaction. Mark (X) only one box.

b. When/Event. When or event causing preparation of DD Form 1354. X only one box.

c. Version, Draft, Interim, or Final DD Form 1354. X only one box.

d. Effective Date. Effective date for transaction; start date of depreciation.

9. Item Number. Use a separate item number for each facility, no item number for additional usages.

10a. Facility Number. Unique facility number identified in Real Property Inventory.

10b. RPUID. Real Property Unique Identifier - Identified in Real Property Inventory.

11. Category Code. The category code describes the facility usage.

12. Catcode Description. The category code name which describes the facility usage.

13. Type Code. Type of construction. **P** for Permanent; **S** for Semipermanent; **T** for Temporary

14. Area: Unit of Meas 1. Area unit of measure; use SF, SY, AC only

15. Total Quantity UM 1. The total area for the measure identified in Item 15. Use negative numbers for demolition.

16. Other: Unit of Meas 2. Unit of Measure 2 is the capacity or other measurement unit (e.g., LF, MB, EA, etc..).

17. Total Quantity UM 2. The total capacity/other for the measure identified in Item 17.

18. Cost. Cost for each facility; for capital improvements to existing facilities, show amount of increase only.

19. Fund Source. Enter the Fund Source Code for this item, i.e., 01-MILCON, 02-BRAC, 03-O&M, etc.

20. Funding Organization. Enter the code for the organization responsible for replacing this facility at the end of its useful life, i.e., 00-Army Active, 01-Army Reserve, 02-Army National Guard, etc.

21. Interest Code. Enter the code that reflects government interest or ownership in the facility, i.e., 01-Owned by DoD, 02-Owned by Federal Government (non-DoD), etc.

22. Item Remarks. Remarks pertaining only to the item number identified in Item 10; show cost sharing.

23. Statement of Completion. Typed name, signature, title, and date of signature by the responsible transferring individual or agent.

24. Accepted By. Typed name, signature, title, and date of signature by the RPAO or accepting official.

25. Property Voucher Number. Next sequential number assigned by the RPAO in voucher register.

26. Construction Deficiencies. List construction deficiencies in project during contractor turnover inspection.

27. Project Remarks. Project level remarks, continuation of blocks, and used to explain "other" entries in Item 9.

TITLE: SOF INTEL OPS EXPANSION, MCB CAMP LEJEUNE, NC (15P1396)

						AREA		OTHER						
9. ITEM NO.	10a. FACILITY NO.	10b. RPUID	11. CATEGORY CODE	12. CATCODE DESCRIPTION	13. TYPE CODE	14. UNIT OF MEAS 1	15. TOTAL QUANTITY UM 1	16. UNIT OF MEAS 2	17. TOTAL QUANTITY UM2	18. COST	19. FUND SOURCE	20. FUND ORG	21. INTER-EST CODE	22. ITEM REMARKS
8			81231	OVERHEAD ELECTRICAL DISTRIBUTION LINES										
9			81232	UNDERGROUND ELECTRICAL DISTRIBUTION LINES										
10			81240	AREA LIGHTING										
11			83210	SANITARY SEWER										
12			84120	WATER SUPPLY MAINS										
13			84210	WATER DISTRIBUTION POTABLE BASE										
14			84310	FIRE PROTECTION WATER DISTRIBUTION										
15			84450	STORMWATER POND										
16			85210	PARKING AREA										
17			85220	SIDEWALK										
18			87110	STORM SEWER										
19			88010	FIRE-ALARM SYSTEM										
20			93310	DEMOLITION										
21														
22														
23														

THIS PAGE HAS BEEN INTENTIONALLY LEFT BLANK

DD Form 1354 Addendum

CLASS 2 PROPERTY RECORD DATA

ACTIVITY UIC: _____DD Form 1354, Item 6
ACTIVITY NAME: _____DD Form 1354, Item 5
SPEC AREA_____
PR NO _____
FACILITY NO: _____DD Form 1354, Item 11

LOCATION GENERAL INFO
COUNTRY: iNFADS fills this based on UIC and Special Area
RPTG-CLMT-UIC _____
ACTION TYPE _____(Acquisition, Capital Improvement, Disposal)
STATE: iNFADS fills this based on UIC and Special Area
COUNTY: iNFADS fills this based on UIC and Special Area
CITY: iNFADS fills this based on UIC and Special Area
FACILITY NAME: _____Completed by gaining installation
MAP GRID: _____Completed by gaining installation
FORMER ACTIVITY UIC: _____DD Form 1354, Item 1, Transfer only
FORMER PR NO.: _____Transfers within Dept of Navy only
FACILITY TYPE: _____Determined by Prime Use Category Code
FAMILY HOUSING INDICATOR: _____ Y/N

MEASUREMENTS
LENGTH_____
WIDTH_____
HEIGHT_____
DEPTH_____
AREA/UM_____
STORIES_____
IRREGULAR_____(Y or N)
ATTIC____ (Y or N)
BASEMENT____(Y or N)
MEZZANINE___(Y or N)
PENTHOUSE____(Y or N)

CONSTRUCTION
YEAR BUILT_____ (New Construction)
YEAR IMPROVED _____ (Capital Improvement)
CURR PROJ NO_____ (Capital Improvement)

DD Form 1354 Addendum

ORIG PROJ NO_____ (New Construction)
CONSTRUCTION TYPE_____(P, S, T, or R)
HERITAGE ASSET DATA –_____ Transfers only

MAINTENANCE
PRIME USE CAT CODE_____ (Largest Category Code for facility on DD Form 1354, Item 12)
MAINT FUND CODE_____ (Supplied by gaining installation)
MAINT RESP_____ (Supplied by gaining installation)
COST REF DOCUMENT NUMBERS: _____DD Form 1354, Item 7

EXCESS / DISPOSAL (DISPOSAL DD FORM 1354 ONLY)
EXCESS ACTION CODE_____
EXCESS ACTION DATE_____
DISPOSAL METHOD_____
DISPOSAL DATE_____
EFD DISPOSAL CONTRACT_____
GSA DISPOSAL CONTRACT_____
DISP CONSOL PR_____

STATUS / UTILIZATION
USER UIC/OG ID_____ (Supplied by gaining installation)
CATEGORY CODE_____ DD Form 1354, Item 12
USE_____(Optional)
AREA/UM_____ DD Form 1354, Items 15 and 16
OTHER/UM_____ DD Form 1354, Items 17 and 18
ALT/UM _____ Must be put in Remarks section of DD Form 1354, where applicable.

SECTION 01 78 23

OPERATION AND MAINTENANCE DATA
09/14

PART 1 GENERAL

1.1 REFERENCES

The publications listed below form a part of this specification to the extent referenced. The publications are referred to within the text by the basic designation only.

ASTM INTERNATIONAL (ASTM)

ASTM E1971	(2005; R 2011) Stewardship for the Cleaning of Commercial and Institutional Buildings

1.2 SUBMISSION OF OPERATION AND MAINTENANCE DATA

Submit Operation and Maintenance (O&M) Data specifically applicable to this contract and a complete and concise depiction of the provided equipment, product, or system, stressing and enhancing the importance of system interactions, troubleshooting, and long-term preventative maintenance and operation. The subcontractors must compile and prepare data and deliver to the Contractor prior to the training of Government personnel. The Contractor must compile and prepare aggregate O&M data including clarifying and updating the original sequences of operation to as-built conditions. Organize and present information in sufficient detail to clearly explain O&M requirements at the system, equipment, component, and subassembly level. Include an index preceding each submittal. Submit in accordance with this section, Section 01 78 24.00 20 FACILITY ELECTRONIC OPERATION AND MAINTENANCE SUPPORT INFORMATION (eOMSI), and Section 01 33 00 SUBMITTAL PROCEDURES.

1.2.1 Package Quality

Documents must be fully legible. Poor quality copies and material with hole punches obliterating the text or drawings will not be accepted.

1.2.2 Package Content

Data package content shall be as shown in the paragraph titled "Schedule of Operation and Maintenance Data Packages." Comply with the data package requirements specified in the individual technical sections, including the content of the packages and addressing each product, component, and system designated for data package submission, except as follows. Commissioned items without a specified data package requirement in the individual technical sections must use Data Package 4. Commissioned items with a Data Package 1 or 2 requirement must use instead Data Package 4.

1.2.3 Changes to Submittals

Manufacturer-originated changes or revisions to submitted data must be furnished by the Contractor if a component of an item is so affected subsequent to acceptance of the O&M Data. Submit changes, additions, or revisions required by the Contracting Officer for final acceptance of

submitted data within 30 calendar days of the notification of this change requirement.

1.2.4 Review and Approval

The Government's Commissioning Authority (CA) must review the commissioned systems and equipment submittals for completeness and applicability. The Government CA will verify that the systems and equipment provided meet the requirements of the Contract documents and design intent, particularly as they relate to functionality, energy performance, water performance, maintainability, sustainability, system cost, indoor environmental quality, and local environmental impacts. The CA will communicate deficiencies to the Contracting Officer. Upon a successful review of the corrections, the CA will recommend approval and acceptance of these O&M manuals to the Contracting Officer. This work is in addition to the normal review procedures for O&M data.

1.2.5 O&M Database

Develop a database from the O&M manuals that contains the information required to start a preventative maintenance program.

1.3 TYPES OF INFORMATION REQUIRED IN O&M DATA PACKAGES

1.3.1 Operating Instructions

Include specific instructions, procedures, and illustrations for the following phases of operation for the installed model and features of each system:

1.3.1.1 Safety Precautions

List personnel hazards and equipment or product safety precautions for all operating conditions.

1.3.1.2 Operator Prestart

Include procedures required to install, set up, and prepare each system for use.

1.3.1.3 Startup, Shutdown, and Post-Shutdown Procedures

Provide narrative description for Startup, Shutdown and Post-shutdown operating procedures including the control sequence for each procedure.

1.3.1.4 Normal Operations

Provide narrative description of Normal Operating Procedures. Include Control Diagrams with data to explain operation and control of systems and specific equipment.

1.3.1.5 Emergency Operations

Include Emergency Procedures for equipment malfunctions to permit a short period of continued operation or to shut down the equipment to prevent further damage to systems and equipment. Include Emergency Shutdown Instructions for fire, explosion, spills, or other foreseeable contingencies. Provide guidance and procedures for emergency operation of all utility systems including required valve positions, valve locations and

zones or portions of systems controlled.

1.3.1.6 Operator Service Requirements

Include instructions for services to be performed by the operator such as lubrication, adjustment, inspection, and recording gage readings.

1.3.1.7 Environmental Conditions

Include a list of Environmental Conditions (temperature, humidity, and other relevant data) that are best suited for the operation of each product, component or system. Describe conditions under which the item equipment should not be allowed to run.

1.3.2 Preventive Maintenance

Include the following information for preventive and scheduled maintenance to minimize corrective maintenance and repair for the installed model and features of each system. Include potential environmental and indoor air quality impacts of recommended maintenance procedures and materials.

1.3.2.1 Lubrication Data

Include preventative maintenance lubrication data, in addition to instructions for lubrication provided under paragraph titled "Operator Service Requirements":

a. A table showing recommended lubricants for specific temperature ranges and applications.

b. Charts with a schematic diagram of the equipment showing lubrication points, recommended types and grades of lubricants, and capacities.

c. A Lubrication Schedule showing service interval frequency.

1.3.2.2 Preventive Maintenance Plan and Schedule

Include manufacturer's schedule for routine preventive maintenance, inspections, tests and adjustments required to ensure proper and economical operation and to minimize corrective maintenance. Provide manufacturer's projection of preventive maintenance work-hours on a daily, weekly, monthly, and annual basis including craft requirements by type of craft. For periodic calibrations, provide manufacturer's specified frequency and procedures for each separate operation.

1.3.2.3 Cleaning Recommendations

Provide environmentally preferable cleaning recommendations in accordance with ASTM E1971.

1.3.3 Corrective Maintenance (Repair)

Include manufacturer's recommended procedures and instructions for correcting problems and making repairs for the installed model and features of each system. Include potential environmental and indoor air quality impacts of recommended maintenance procedures and materials.

1.3.3.1 Troubleshooting Guides and Diagnostic Techniques

Include step-by-step procedures to promptly isolate the cause of typical malfunctions. Describe clearly why the checkout is performed and what conditions are to be sought. Identify tests or inspections and test equipment required to determine whether parts and equipment may be reused or require replacement.

1.3.3.2 Wiring Diagrams and Control Diagrams

Wiring diagrams and control diagrams shall be point-to-point drawings of wiring and control circuits including factory-field interfaces. Provide a complete and accurate depiction of the actual job specific wiring and control work. On diagrams, number electrical and electronic wiring and pneumatic control tubing and the terminals for each type, identically to actual installation configuration and numbering.

1.3.3.3 Maintenance and Repair Procedures

Include instructions and a list of tools required to repair or restore the product or equipment to proper condition or operating standards.

1.3.3.4 Removal and Replacement Instructions

Include step-by-step procedures and a list required tools and supplies for removal, replacement, disassembly, and assembly of components, assemblies, subassemblies, accessories, and attachments. Provide tolerances, dimensions, settings and adjustments required. Instructions shall include a combination of text and illustrations.

1.3.3.5 Spare Parts and Supply Lists

Include lists of spare parts and supplies required for maintenance and repair to ensure continued service or operation without unreasonable delays. Special consideration is required for facilities at remote locations. List spare parts and supplies that have a long lead-time to obtain.

1.3.4 Corrective Maintenance Work-Hours

Include manufacturer's projection of corrective maintenance work-hours including requirements by type of craft. Corrective maintenance that requires completion or participation of the equipment manufacturer shall be identified and tabulated separately.

1.3.5 Appendices

Provide information required below and information not specified in the preceding paragraphs but pertinent to the maintenance or operation of the product or equipment. Include the following:

1.3.5.1 Product Submittal Data

Provide a copy of all SD-03 Product Data submittals required in the applicable technical sections.

1.3.5.2 Manufacturer's Instructions

Provide a copy of all SD-08 Manufacturer's Instructions submittals required

in the applicable technical sections.

1.3.5.3 O&M Submittal Data

Provide a copy of all SD-10 Operation and Maintenance Data submittals required in the applicable technical sections.

1.3.5.4 Parts Identification

Provide identification and coverage for all parts of each component, assembly, subassembly, and accessory of the end items subject to replacement. Include special hardware requirements, such as requirement to use high-strength bolts and nuts. Identify parts by make, model, serial number, and source of supply to allow reordering without further identification. Provide clear and legible illustrations, drawings, and exploded views to enable easy identification of the items. When illustrations omit the part numbers and description, both the illustrations and separate listing shall show the index, reference, or key number that will cross-reference the illustrated part to the listed part. Parts shown in the listings shall be grouped by components, assemblies, and subassemblies in accordance with the manufacturer's standard practice. Parts data may cover more than one model or series of equipment, components, assemblies, subassemblies, attachments, or accessories, such as typically shown in a master parts catalog

1.3.5.5 Warranty Information

List and explain the various warranties and clearly identify the servicing and technical precautions prescribed by the manufacturers or contract documents in order to keep warranties in force. Include warranty information for primary components such as the compressor of air conditioning system.

1.3.5.6 Personnel Training Requirements

Provide information available from the manufacturers that is needed for use in training designated personnel to properly operate and maintain the equipment and systems.

1.3.5.7 Testing Equipment and Special Tool Information

Include information on test equipment required to perform specified tests and on special tools needed for the operation, maintenance, and repair of components.

1.3.5.8 Testing and Performance Data

Include completed prefunctional checklists, functional performance test forms, and monitoring reports. Include recommended schedule for retesting and blank test forms.

1.3.5.9 Contractor Information

Provide a list that includes the name, address, and telephone number of the General Contractor and each Subcontractor who installed the product or equipment, or system. For each item, also provide the name address and telephone number of the manufacturer's representative and service organization that can provide replacements most convenient to the project site. Provide the name, address, and telephone number of the product,

equipment, and system manufacturers.

1.4 TYPES OF INFORMATION REQUIRED IN CONTROLS O&M DATA PACKAGES

Include Data Package 5 and the following for control systems:

a. Narrative description on how to perform and apply all functions, features, modes, and other operations, including unoccupied operation, seasonal changeover, manual operation, and alarms. Include detailed technical manual for programming and customizing control loops and algorithms.

b. Full as-built sequence of operations.

c. Copies of all checkout tests and calibrations performed by the Contractor (not Cx tests).

d. Full points list. A listing of rooms shall be provided with the following information for each room:

(1) Floor

(2) Room number

(3) Room name

(4) Air handler unit ID

(5) Reference drawing number

(6) Air terminal unit tag ID

(7) Heating and/or cooling valve tag ID

(8) Minimum cfm

(9) Maximum cfm

e. Full print out of all schedules and set points after testing and acceptance of the system.

f. Full as-built print out of software program.

g. Electronic File:

(1) Assemble each manual into a composite electronically indexed file in PDF format. Provide HDD’s, DVD's or CD's as appropriate, so that each one contains all maintenance and record files, and also the Project Record Documents and Training Videos, of the entire program for this facility.

(2) Name each indexed document file in composite electronic index with applicable item name. Include a complete electronically linked operation and maintenance directory.

(3) Link the index to separate files within the composite of files. Book mark maintenance and record files, that have a Table of Contents, according to the Table of Contents

h. Marking of all system sensors and thermostats on the as-built floor plan and mechanical drawings with their control system designations.

1.5 SCHEDULE OF OPERATION AND MAINTENANCE DATA PACKAGES

Furnish the O&M data packages specified in individual technical sections. The required information for each O&M data package is as follows:

1.5.1 Data Package 1

a. Safety precautions

b. Cleaning recommendations

c. Maintenance and repair procedures

d. Warranty information

e. Contractor information

f. Spare parts and supply list

1.5.2 Data Package 2

a. Safety precautions

b. Normal operations

c. Environmental conditions

d. Lubrication data

e. Preventive maintenance plan and schedule

f. Cleaning recommendations

g. Maintenance and repair procedures

h. Removal and replacement instructions

i. Spare parts and supply list

j. Parts identification

k. Warranty information

l. Contractor information

1.5.3 Data Package 3

a. Safety precautions

b. Operator prestart

c. Startup, shutdown, and post-shutdown procedures

d. Normal operations

e. Emergency operations

f. Environmental conditions

g. Lubrication data

h. Preventive maintenance plan and schedule

i. Cleaning recommendations

j. Troubleshooting guides and diagnostic techniques

k. Wiring diagrams and control diagrams

l. Maintenance and repair procedures

m. Removal and replacement instructions

n. Spare parts and supply list

o. Product submittal data

p. O&M submittal data

q. Parts identification

r. Warranty information

s. Testing equipment and special tool information

t. Testing and performance data

u. Contractor information

1.5.4 Data Package 4

a. Safety precautions

b. Operator prestart

c. Startup, shutdown, and post-shutdown procedures

d. Normal operations

e. Emergency operations

f. Operator service requirements

g. Environmental conditions

h. Lubrication data

i. Preventive maintenance plan and schedule

j. Cleaning recommendations

k. Troubleshooting guides and diagnostic techniques

l. Wiring diagrams and control diagrams

m. Maintenance and repair procedures

n. Removal and replacement instructions

o. Spare parts and supply list

p. Corrective maintenance man-hours

q. Product submittal data

r. O&M submittal data

s. Parts identification

t. Warranty information

u. Personnel training requirements

v. Testing equipment and special tool information

w. Testing and performance data

x. Contractor information

1.5.5 Data Package 5

a. Safety precautions

b. Operator prestart

c. Start-up, shutdown, and post-shutdown procedures

d. Normal operations

e. Environmental conditions

f. Preventive maintenance plan and schedule

g. Troubleshooting guides and diagnostic techniques

h. Wiring and control diagrams

i. Maintenance and repair procedures

j. Removal and replacement instructions

k. Spare parts and supply list

l. Product submittal data

m. Manufacturer's instructions

n. O&M submittal data

o. Parts identification

p. Testing equipment and special tool information

q. Warranty information

r. Testing and performance data

s. Contractor information

PART 2 PRODUCTS

Not Used.

PART 3 EXECUTION

Not Used.

-- End of Section --

SECTION 01 78 24.00 20

FACILITY ELECTRONIC OPERATION AND MAINTENANCE SUPPORT INFORMATION (eOMSI)
09/14

PART 1 GENERAL

1.1 GENERAL REQUIREMENTS

This section provides the requirements for electronic operation and maintenance support information (eOMSI). eOMSI contains detailed as-built information describing the efficient, economical, safe operation, maintenance, and repair of the facility. eOMSI is required to be in electronic format divided into the eOMSI Data and eOMSI Document files.

a. Provide eOMSI Data files in the eOMSI Spreadsheet Workbook format that are uploaded by the Government into a Government computerized maintenance management system (CMMS). Maximo is the CMMS that will be used on this project.

b. Provide eOMSI Document files in Portable Document Format (PDF), Computer Assisted Design and Drafting (CADD), and MS Word formats that can be uploaded into a document management system. The eOMSI document information is to be factual, concise, comprehensive, and written to be easily used by maintenance personnel. Descriptive matter and theory must include technical details that are essential for a comprehensive understanding of the operation, maintenance and repair of the system. The eOMSI Preparer shall ensure that the eOMSI reflect changes to systems and equipment, made during construction.

1.2 DEFINITIONS

1.2.1 Component Inventory Management Unit (CIMU)

CIMU is an organization of like-kind real property into manageable maintenance units. CIMU is a building component, group of components or component assemblies, serving a specific purpose in a facility that can be expected to follow a common and predictable lifecycle behavior. This class of non-equipment will include items such as exterior walls, exterior windows, interior finish, and roofs. This class of equipment will include items such as fan coil units, air handling units, lighting, and water closets. CIMUs can include items of installed equipment typically subject to routine scheduled maintenance.

1.2.2 Real Property Inventory Equipment (RPIE)

RPIE is a Government owned or leased individual pieces of equipment, apparatus, or fixture that are essential to the function of the real property (i.e. plumbing, electrical, heating, cooling and elevators). It is physically attached to, integrated into, and built in or on the property. Individual RPIE's can be combined to make a CIMU to facilitate facilities management.

1.2.3 BOTH (Combined CIMU and RPIE)

A BOTH is a stand-alone piece of equipment that can be managed independently and therefore is a Component Inventory Management Unit and a Real Property Installed Equipment. (If a CIMU has a Quantity of "One", it

would be considered a BOTH)

1.2.4 Utility and Energy Management (UEM)

UEM is a part of the Government Public Works (PW) Organization that manages the operation and maintenance of the Base utilities.

1.2.5 Systems

The words "system", "systems", and "equipment", when used in this document refer to as-built systems and equipment.

1.2.6 Computer Assisted Design and Drafting (CADD)

Electronic Computer Assisted Design and Drafting graphic software program that is used to create facility design contract documents.

1.2.7 eOMSI Spreadsheet Workbook

The eOMSI Spreadsheet Workbook is a group of Excel spreadsheets that provide forms, samples, and tools to assist the Contractor in identifying equipment and non-equipment data for the project. Use these Excel spreadsheets to organize and record maintenance data for the project. Use the eOMSI Spreadsheet Workbook in conjunction with this specification section with the file title: "eOMSI Facility Data Workbook 24SEPT2014.xlsm" located inside the zip file at the following web link: http://www.wbdg.org/ccb/NAVGRAPH/graphtoc.pdf

1.2.8 Flat File

The flat file is the blank forms portion of the eOMSI Spreadsheet Workbook used to fill in the equipment and non-equipment data. These flat file forms are Excel templates with column headings that identify required information for equipment and non-equipment. The data placed on the flat file spreadsheets are organized by the Contractor into RPIE, and BOTH maintenance units.

1.2.9 KTR

KTR is an abbreviation for "Contractor."

1.3 ORGANIZATION of eOMSI

Prepare the eOMSI submittals in two components, eOMSI Data Files and eOMSI Document Files.

1.3.1 eOMSI Data Files

Provide facility specific information listed in the DESCRIPTION of WORK of this specification section and divide into Equipment Data and Non-Equipment Data on eOMSI Spreadsheet Workbook / Flat Files. The Government will use the completed eOMSI Spreadsheet Workbook to update information of the CMMS indicated above. The following tabs are included in the eOMSI Spreadsheet Workbook and serve the purpose stated:

a. Flat File - Equipment Data; This spreadsheet provides an organized format for the contractor to fill in required information about dynamic equipment (fans, pumps,…) that is part of the project.

b. Flat File - Non-Equipment Data; This spreadsheet provides an organized format for the Contractor to fill in required information about non-equipment (doors, windows, etc.) that is part of the project.

c. New CONST - RENOVATION Schema; Provides information and instructions to explain the task of completing the Flat File - Equipment Data and Flat File - No-Equipment Data spreadsheets.

d. Facility and UEM Uniformat; Provides a Uniformat division of facility and utility systems and components of the project. This information is used to complete the Master-System-Subsystem portions of the Flat File - Equipment Data and Flat File - Non-Equipment Data spreadsheets.

e. UEM Asset Classification: Provides a list of critical Utility and Energy Management components that must be identified in the Flat File - Equipment Data spreadsheet.

f. Asset Identification List: List of items that require equipment tagging. Tag numbering must be entered in the Equipment Tag Number of the Flat File - Equipment Data spreadsheet.

g. Data Definitions; Provide definitions of terms used on the spreadsheet workbook.

1.3.2 eOMSI Document Files

Provide facility specific information, which was used to construct the project and provide information on operation and maintenance of the facility in a form that can be easily accessed and used. Organize the document files to facilitate storage in an electronic Government document file management system. Arrange the eOMSI Documents files in the following order and identify the document files as follows:

a. Facility Information

b. Primary Systems Information

c. Product and Drawing Information

Cross-referencing within or between the eOMSI Document File parts must be specific.

1.3.3 Order of Precedence of eOMSI Requirements

This specification section takes precedence over the eOMSI Spreadsheet Workbook in the event of conflict between this specification section and the eOMSI Spreadsheet Workbook.

1.3.4 Sources of eOMSI Information

The sources of data needed to prepare the eOMSI include, but are not limited to, the design plans and specifications, field visits, approved construction submittals and manufacturer's catalog data for materials, products, systems, as-built drawings, contract modifications, and construction methods used in this contract. Ensure that the eOMSI reflect changes to systems and equipment made during construction as a result of contract modifications. Collect and input needed information to complete the data and document files

1.3.5 Unified Facility Guide Specifications (UFGS) Operation and Maintenance Data Packages

Provide information necessary to maintain the equipment and non-equipment of the facility by utilizing the SD-10 Operations and Maintenance Data Packages as defined in Section 01 78 23 OPERATIONS AND MAINTENANCE DATA. Provide the SD-10 Data Packages required in the individual sections for each product, material, and system used on the project.

1.4 eOMSI MEETINGS

Organize, coordinate, and facilitate the meetings necessary to obtain the information to complete the eOMSI submittal.

1.4.1 eOMSI Start-Up Meeting

During the Pre Construction Meeting, discuss the following;

a. The eOMSI Development Meetings schedules and participants.

b. Processes and methods of gathering of facility eOMSI information during construction.

c. The qualifications of the eOMSI Preparer.

d. The eOMSI Submittals schedule. Place the eOMSI submittal schedule on the construction schedule.

1.4.2 eOMSI Development Meetings

Meet with key personnel to discuss the eOMSI requirements and the deliverables. These are a series of meetings that begin after the Preconstruction Meeting and conclude with the Contractor's first eOMSI submittal. Include the eOMSI Preparer, Commissioning Authority (CA) and the Quality Control Manager to attend these meetings. Also include the Mechanical, Electrical and Fire Protection Sub Contractors as required. The purposes of these meetings are to:

a. Familiarize the Contractor with the Government PW maintenance processes.

b. Provide the Contractor with an understanding of the RPIE, CIMU, and BOTH to organize the facility into these information structures.

c. Obtain the "By KTR Using Government Info" information for the eOMSI Flat File Spreadsheets.

d. Review and identify the electronic format, units of measure, titles, and wording necessary to load the eOMSI data into the designated Government CMMS and eOMSI documents into the Government Document Management System.

e. Review progress of eOMSI development and discuss issues that need to be resolved.

f. Coordinate requirements for eOMSI training.

1.4.3 Field Validation Meetings

Meet with key personnel to determine the accuracy of the eOMSI Data and

Documents as described in this specification. Include the DOR and Subcontractors as required to verify as-built conditions.

1.4.4 Facility Turnover Meetings

Refer to paragraph FACILITY TURNOVER PLANNING MEETINGS (NAVFAC Red Zone - NRZ) in Section 01 30 00, ADMINISTRATIVE REQUIREMENTS, for eOMSI facility turnover meeting requirements.

1.5 UNITS of MEASURE

Provide eOMSI utilizing the units of measure used in the Government created contract documents. Metric eOMSI shall be in SI (System International) metric units exclusively.

1.6 QUALIFICATIONS of eOMSI PREPARER

Submit Qualifications of eOMSI Preparer that meet the following:

a. Possess multidiscipline technical knowledge of the operations and maintenance of building systems.

b. Experience with the type of systems that are identified in this specification and capable of augmenting manufacturer's information to clarify operations instructions.

c. Experience preparing detailed Operations and Maintenance Manuals for facilities of equal size and complexity as required by this contract

d. Ability to prepare spreadsheets to be loaded into a CMMS.

e. Experience presenting training and coordinating a team of manufacturer's representatives to provide training of Facility Users and Maintenance Personnel.

1.7 SUBMITTALS

Government approval is required for submittals with a "G" designation; submittals not having a "G" designation are for Contractor Quality Control approval. Submit the following in accordance with Section 01 33 00 SUBMITTAL PROCEDURES:

SD-07 Certificates

Qualifications of eOMSI Preparer; G

SD-10 Operation and Maintenance Data

Training Plan; G

For each training session; submit dates start and finish times, and locations; outline of the information to be presented; names and qualifications of the presenters; and list of texts and other materials required to support training.

Training Outline; G

Training Content; G

SD-11 Closeout Submittals

eOMSI, Preliminary Submittal; G

eOMSI, 100 percent, Prefinal Submittal; G

eOMSI, Final Submittal; G

Training Video Recording; G

Validation of Training Completion; G

1.8 SUBMITTAL FORMAT

1.8.1 eOMSI Data Files

Provide eOMSI data on compact disks (CD) or data digital versatile disk (DVD) disks in formats that are compatible with those used on the project. Provide eOMSI Data information by completing the eOMSI Spreadsheet Workbook / Flat File initial templates:

a. eOMSI Spreadsheet Workbook / Flat File - Equipment Data tab; Provide information to all spreadsheet fields. Obtain the information indicated to be supplied "By KTR using Government info" from the Contracting Officer / Facility Maintenance Specialist (FMS) and fill in this part of the Flat File. Typically identify individual pieces of equipment by RPIE. Group equipment with similar Uniformat classification, design life, install date, remaining service life, and direct condition rating - into manageable CIMUs. Except, when the individual RPIE is complex enough to require its own management planning and in this case the individual RPIE is also a BOTH. Each CIMU shall be greater than $2,500 in value.

b. eOMSI Spreadsheet Workbook / Flat File - Equipment Data tab; Provide information to all spreadsheet fields. Group Non-equipment with similar Uniformat classification, design life, install date, remaining service life, and direct condition rating - into manageable CIMUs. Obtain the information indicated to be supplied "By KTR using Government info" from the Contracting Officer / FMS to complete that portion of the Flat File. Each CIMU shall be greater than $2,500 in value.

1.8.2 eOMSI Document Files

Provide eOMSI document files on CD or data DVD disks using the most current version of Adobe Acrobat or similar software capable of producing PDF files that can be used to upload the files into an electronic Government document management system. Bookmark the PDF files for easy access to the information. Bookmark Facility Information and Primary Systems Information to at least one level lower than the major system. Bookmark Product and Drawing Information documents using the current version of Masterformat and arrange submittals using the specification sections as a structure. Use Masterformat and UFGS numbers along with descriptive bookmarking titles that explain the content of the information that is being bookmarked.

Provide the following information on the compact disk label and disk holder/ case:

a. Building Number

b. Project Title

c. Activity and Location

d. Construction Contract Number

e. Prepared For: (Contracting Agency)

f. Prepared By: (Name, title, phone number and email address)

g. Include the compact disk content on the disk label

h. Date

i. Virus scanning program used

1.9 SUBMITTAL SCHEDULE

Provide the following eOMSI submittals. Scan electronic files of eOMSI Data and eOMSI Documents for malicious viruses using a commercially available scanning program that is routinely updated to identify/remove current virus threats.

1.9.1 eOMSI, Preliminary Submittal

Submit the Preliminary submittal when construction is approximately 50 percent complete;

a. eOMSI Data Files.(Excel)

b. eOMSI Document Files (Bookmarked PDF) that include:

(1) Facility Information

(2) Primary Systems Information

(3) Product and Drawing Information

Provide four electronic copies to the Contracting Officer for approval. Provide the submittal in sufficient detail to allow the Government to substantiate that the data collection, detail of discussion, and information organization of both the data and document files are in accordance with the contract. Include in the submittal, as a minimum, all available Facility Information; all systems of the Primary Systems Information (at least one system to be essentially complete and the remaining systems shall be at least 50 percent complete); and at least two Masterformat divisions of the completed Product Data.

1.9.1.1 Preliminary eOMSI Submittal Review Duration

Allow the Government a minimum of 30 calendar days to review and comment on the submittal, from the time the Government receives the Preliminary eOMSI submittal.

1.9.2 100 percent - Prefinal eOMSI Submittal

Submit four electronically formatted copies of the 100 percent submittal of the eOMSI Data File and eOMSI Document File to the Contracting Officer for

approval. The eOMSI, 100 percent, Prefinal Submittal is due 90 calendar days prior to Beneficial Occupancy Date (BOD)/ Placed In Service Date. This submittal shall be a complete, working document that can be used to operate and maintain the facility. Any portion of the submittal that is incomplete or inaccurate will require the entire submittal to be returned for correction. Incorporate all Government requested changes from the Preliminary submittal and the eOMSI Development Meetings comments into the Prefinal submission. Provide the same information required for each eOMSI document file CD/ DVD disk label, on the introductory page of each eOMSI submittal volume. Refer to paragraph titled "eOMSI Document Files" of this section for a list of this required introductory page information.

Submit the Prefinal submittal when construction is 90 percent complete that include;

a. eOMSI Data Files.(Excel)

b. eOMSI Document Files (Bookmarked PDF) that include;

(1) Facility Information

(2) Primary Systems Information

(3) Product and Drawing Information

1.9.2.1 Prefinal eOMSI Submittal Review Duration

Allow the Government a minimum of 30 calendar days to review and approve the submittal, from the time the Government receives the Prefinal eOMSI submittal. If the Prefinal submittal is required to be resubmitted, the Government review of subsequent submittals shall have the same review duration as the first submittal. No extension in project completion date will be granted due to resubmittal.

1.9.3 eOMSI, Final Submittal

Complete the eOMSI Data and Documents and provide Final submittal in Excel and bookmarked PDF format as required in the Prefinal Submittal. Deliver submittals to the Contracting Officer for approval. The Final submittal is due at BOD/ Placed in Service Date. Include all Government requested changes from the Prefinal submittal, Field Validation, and the Project Closeout Meetings to complete the Final submittal.

In addition to the formats stated above, provide four electronic copies of the Final submittal in editable formats. Provide editable eOMSI Document drawing and diagram files in CADD and other editable eOMSI Document files in MS Word or Excel. Refer to Product and Drawing Information below to describe the format of the Record Drawings submission.

1.10 FACILITY SYSTEMS

The project is anticipated to include the following critical systems. Provide eOMSI data, eOMSI documents, and training for all products, materials, and equipment that make up these systems in the final constructed facility, including the following systems:

a. HVAC facility systems (including, but not limited to, heat pumps, variable refrigerant flow (VRF) heat pumps, air handling equipment, exhaust fans, fan coil units, heat recovery wheels, control valves, and

backflow preventers)

b. Direct Digital Controls/Space Temperature Controls

c. Electrical systems (including transformers, diesel electric generator sets, automatic transfer switches, primary switchgear, secondary switchgear, high voltage switches, variable frequency drives, and frequency converters).

d. Fire protection systems and fire alarm detection systems

e. Site civil water utilities (including water, storm water collection, and treatment systems)

f. Site civil wastewater utilities (including pumping station, tanks, treatment and filters)

g. Potable water systems (including wells, tanks, pumps, back-flow preventers, filters, disinfection, and controllers)

h. Site electrical utilities (including substations, transformers, and pad mounted switchgear)

PART 2 PRODUCTS

2.1 DESCRIPTION OF WORK

2.1.1 eOMSI DATA FILES

Provide the following items of data in a format compatible with the CMMS used on the project. Enter all data in the eOMSI Spreadsheet Workbook / Flat File.

2.1.1.1 Equipment Information

a. Equipment Listing - Provide the following information for each piece of installed equipment and for each applicable item listed on the UEM Asset Classification tab of the eOMSI Spreadsheet Workbook. Enter all information on the Flat File - Equipment Data tab of the eOMSI Spreadsheet Workbook.

(1) Asset_ID

(2) Asset Description

(3) ORG_ID

(4) Site_ID

(5) Building Name

(6) Asset Type

(7) Inventory Category

(8) Location Code

(9) Design Life

(10) FCI

(11) Remaining Service Life

(12) DCR

(13) Work Center

(14) Belongs to (Parent Asset. ID)

(15) Contract number

(16) Task/delivery order number

(17) Drawing reference ID

(18) Location description

(19) Master system Uniformat

(20) System Uniformat

(21) Subsystem Uniformat

(22) Quantity

(23) Install date

(24) Replacement cost

(25) Manufacturer

(26) Model number

(27) Serial number

(28) Manufacturer Warranty end date

(29) Warranty Company Info

(30) Comment (Such as: Required information not to void warranty)

(31) Status Date

(32) Asset Status

(33) UEM Classification ID

(34) UEM Classification Description

(35) Job Plan Code (Preventive Maintenance)

The Job Plan List is provided by NAVFAC to identify applicable Job Plan Codes. If NAVFAC does not have a Job Plan for the equipment used, provide information in paragraph entitled Job Plan for Equipment NOT assigned a NAVFAC Job Plan below.

(36) Equipment Tag Number

b. Job Plan for Equipment NOT assigned a NAVFAC Job Plan - Preventive Maintenance Procedures, and Schedules. If the Government cannot provide a job plan for a specific piece of equipment, provide a detailed Job Plan (Preventive Maintenance Plan) using manufacturer's recommendations and sound engineering practice. Show associated frequencies when job plan is to be performed and include detailed preventive maintenance (PM) procedures such as inspections, tests, adjustments required to ensure proper and economical operation and minimize corrective maintenance. For periodic calibrations, provide manufacturer's specified frequency and procedures for each operation. Detailed Job Plans include the following:

(1) Safety instructions and precautions,

(2) Including lock out/tag out precautions,

(3) Required skill level,

(4) Number of personnel needed,

(5) Frequency of performing the job plan,

(6) Special tools needed,

(7) Parts needed

(8) Estimated time required to complete the task.

(9) Lubrication schedules indicating types, grades and capacities.

2.1.1.2 Non-Equipment Information

a. Provide the following information for each item of non-equipment. Enter all information on the eOMSI Spreadsheet Workbook - Flat File Non-Equipment Data tab.

(1) Asset ID

(2) Asset Description

(3) ORG_ID

(4) Site_ID

(5) Asset Type

(6) Inventory Category

(7) Design Life

(8) FCI

(9) DCR

(10) Building Name

(11) Location Code

(12) Contract Number

(13) Task/ Delivery Order Number

(14) Drawing Reference _ID

(15) Notes on CIMU Structure

(16) Master System Uniformat

(17) System Uniformat

(18) Subsystem Uniformat

(19) Quantity

(20) Install Date

(21) Remaining Service Life

(22) Replacement Cost

(23) Warranty End Date

(24) Warranty Company Info

(25) Comments (Such as: Required information not to void warranty)

2.1.2 eOMSI DOCUMENT FILES

2.1.2.1 Facility Information

Facility Information includes the following;

a. General Facility and System Description - Describe the function of the facility. Detail the overall dimensions of the facility, number of floors, foundation type, expected number of occupants, and facility Category Code. List and generally describe all the facility systems listed in the Primary Systems Information and any special building features (for example, HVAC Controls, Sprinkler Systems, cranes, elevators, and generators). Include photographs marked up and labeled to show key operating components and the overall facility appearance.

b. Basis of Design - Include the Government furnished Basis of Design that shows the basic design scope of work, assumptions and the original intentions of the DOR. Identify the site utility design goals, objectives, design load limits, assumptions, and system features that are critical to the operation and maintenance of the systems.

c. Safety Hazards - List all residual hazards identified in the Activity Hazard Analysis as prepared by the DOR. Provide recommended safeguards for each identified hazard.

d. Floor Plans - Provide uncluttered, legible 11 by 17 inches floor plans. Include room numbers, type or function of spaces, and overall facility dimensions on the floor plans. Do not include construction instructions, references, frame numbers, etc.

e. Floor Coverings, Wall Surfaces, Ceiling Surfaces - Provide a table that lists by room number (including hallways and common spaces), the type,

and area of finish. The table shall include a facility summary of the total area for each type of space and floor, wall, or ceiling finish.

f. Roofing - Provide the total area of each type of roof surface and system. Provide the name of the roofing product and system; manufacturer's, supplier's, and installer's names, addresses, and phone numbers. For each type of roof, provide a recommended inspection, maintenance and repair schedule that details checkpoints, frequencies, and prohibited practices. List roof structural load limits.

g. Supply Inventory Requirements - Provide a list of maintenance and repair supplies (e.g., spare parts, fuels and lubricants) required to ensure continued operation without unreasonable delays. Identify and list parts and supplies that have long purchase lead times. Give special consideration to facilities at remote locations.

2.1.2.2 Primary Systems

Provide Primary Systems Information for all primary systems listed below. Primary systems information shall address operations, troubleshooting guides and diagnostic techniques, repair, and preventive maintenance.

a. HVAC facility systems

b. Direct digital controls/ space temperature controls

c. Electrical systems

d. Fire protection systems and fire alarm and detection systems

e. Cathodic protection

f. Site civil utilities (including water, wastewater, storm water collection, gas/ fuel, manholes/ hand holes, and pumping, and treatment systems)

g. Site electrical utilities (including power generation, communications, distribution, ducts, and manholes/ hand holes)

2.1.2.3 Primary Systems Information

Primary Systems Information requires using a systems approach. This approach requires that consideration be given to the entire system (that is, the interfaces of equipment, connections and material flow within the system). Use Notes, Cautions and Warnings throughout the Primary Systems Information to emphasize important and critical instructions and procedures. Provide the following information for each system:

a. Operation

(1) System Description - Provide a detailed discussion of the system composition and operation. Include technical details that are essential for an understanding of the system.

(2) Start-Up and Shutdown Procedures - Provide step by step instructions to bring systems from static to operational configurations and from operating to shutdown status.

(3) Normal and Emergency Operating Instructions - Provide a discussion

of the normal and emergency operation and control of the system. Address operating norms (for example, temperatures, pressures, and flow rates) expected at each zone or phase of the system. Supplement the discussion with control and wiring diagrams and data. Include shutdown instruction for fires, explosions, spill, or other contingencies.

(4) System Flow Diagrams - Provide a flow diagram indicating system liquid, air or gas flow during normal operations. Integrate all system components into the diagram. A compilation of non-integrated, flow diagrams for the individual system components are not acceptable.

(5) Field Test Reports - Provide Field Test Reports (SD-06) that apply to equipment associated with the system. The eOMSI Document Submittal does not require the second season HVAC testing.

(6) Operator Servicing Requirements - Provide instructions for services to be performed by the operator such as lubrication, adjustments, and inspection.

b. Troubleshooting Guides and Diagnostic Techniques

Provide step-by-step procedures for isolating the cause of system malfunctions. The procedures shall clearly state indications or symptoms of trouble; the sequential instructions, including checks and tests to be performed and conditions to be sought, to determine the cause; and remedial measures to bring the equipment and system to operating condition. Identify special test equipment required to perform the procedures. Start the troubleshooting guide at the system level and proceed to a level where detailed manufacturer's troubleshooting procedures for equipment and components can be referenced. Provide clear references to repair procedures included in the manufacturer's Product Data.

c. Repair

Repair Procedures - Provide repair instructions required for restoring equipment to proper operating condition and standards. References must be specific as to location within the eOMSI manuals.

2.1.2.4 Product and Drawing Information

This portion of the eOMSI provides a record of the facility products, materials, equipment, and minimum information necessary to operate the facility. Provide Product and Drawing Information for all systems in the final constructed facility, including the anticipated critical systems identified in this specification section.

a. O&M Data. Include, as a minimum O&M Data, required in the SD-10 Data Packages of the UFGS specifications. Provide the following for each product, material, and system on the project:

(1) Materials

(2) Equipment

(3) Data Sheets

(4) Test Reports

(5) Warranties

(6) Certificates

(7) Shop Drawings

b. Drawings. Provide original CADD drawings or original facility design drawings that have been edited to eliminate unneeded information and highlight eOMSI information in PDF format. Provide the following drawings at a large enough scale to be clear, legible, and able to differentiate designated isolation units from surrounding valves and switches.

(1) Utility Schematic Diagrams - Provide a one line schematic diagram for each utility system such as power, water, wastewater, and gas/ fuel. Schematic diagram must show from the point where the utility line is connected to the mainline up to the five-foot connection point to the facility. Indicate location or area designation for route of transmission or distribution lines; locations of duct banks, manholes/ handholes or poles; isolation units such as valves and switches; and utility facilities such as pump stations, lift stations, and substations.

(2) Enlarged Connection and Cutoff Plans - Provide enlarged floor plans that provide information between the five foot utility connection point and where utilities connect to facility distribution. Enlarge floor plans/ elevations of the rooms where the utility enters the building and indicate on these plans locations of the main interior and exterior connection and cutoff points for all utilities. Also enlarge floor plans/ elevations of the rooms where equipment is located. Include enough information to enable someone unfamiliar with the facility to locate the connection and cutoff points. Indicate the room number, panel number, circuit breaker, valve number, etc., of each utility and equipment connection and cutoff point, and what that connection and cutoff point controls.

c. Equipment Tags. Provide equipment tags for all applicable items listed in eOMSI Spreadsheet Workbook/ Asset Identification List tab. Provide tags that are durable, oil and water-resistant and approved by the Contracting Officer. Attach tag with copper wire and spray with a clear silicone waterproof coating. Place tags on the equipment in a visible location that can be read by an inspector in a standing position. Provide tag information to include: Contract Number, Maximo Equipment Identification Numbers, and Equipment Tag Number that corresponds with the drawing. Only equipment with a value of greater than $2,500 or sized as noted in eOMSI Spreadsheet Workbook/ Asset Identification List tab, shall be tagged.

Provide tags for the items listed below in addition to the items listed in eOMSI Spreadsheet Workbook/ Asset Identification List tab:

(1) Control valves for heating, cooling, gas, fuel, water and wastewater for piping 1 1/2 inches or greater. Main interior and exterior utility cut off valves (no dollar value restriction).

d. Record Drawings. Provide an electronic copy of the Record Drawings for the project in PDF format, bookmarking all drawings using the sheet title and sheet number. Provide the Record Drawings on the same electronic media as used for the eOMSI submittal but on separate disks or files to allow simultaneous use of the eOMSI and Record Drawings.

PART 3 EXECUTION

3.1 eOMSI TRAINING

Prior to acceptance of the facility by the Contracting Officer for Beneficial Occupancy/ Placed in Service Date, the eOMSI Preparer must provide a comprehensive project-specific Government personnel training program for the systems and equipment of the facility specified in the technical specifications of this Contract. The trainees must include the Facilities Management Specialist, maintenance staff, and applicable building occupants. Coordinate, schedule, and ensure that training is completed. Instructors shall be well-versed in the particular systems that they are presenting. Provide instruction on site at a location approved by the Contracting Officer.

3.1.1 Training Plan

Submit a written training plan to the Contracting Officer for approval at least 60 calendar days prior to the scheduled training. Indicate prior approval of the training plan by the Commissioning Authority (CA) on the submittal forwarded to the Contracting Officer. Also, coordinate the training schedule with the Contracting Officer and CA. Include within the plan the following elements:

a. Equipment included in training.

b. Intended audience.

c. Location of training.

d. Objectives.

e. Subjects covered including description.

f. Duration of training on each subject.

g. Methods (classroom lecture, video, site walk-through, actual operational demonstrations, written handouts, etc.).

h. Instructor and instructor qualifications for each subject.

3.1.2 Training Content

The core of this training shall be based on manufacturer's recommendations and the operation and maintenance information defined in Section 01 78 23 OPERATIONS AND MAINTENANCE DATA. The CA is responsible for overseeing and approving the content and adequacy of the training. The eOMSI Preparer and the CA must interview the Government Facilities Management Specialist and the Contracting Officer to determine the special needs and areas where training will be most valuable. The Contracting Officer and CA must decide how rigorous the training should be for each piece of equipment. The training shall include the following for each Primary System:

a. Start-up, normal operation, shutdown, unoccupied operation, seasonal changeover, manual operation, controls set-up and programming, troubleshooting, and alarms.

b. Relevant health and safety issues.

c. Discussion of how the feature or system is environmentally responsive. Advise adjustments and optimizing methods for energy conservation.

In addition to the training requirements above, provide a brief summary of "Facility Information" and a more detailed presentation of, "Primary Systems Information". Spend 95 percent of the instruction time during the presentation on the "Primary Systems Information". Include the following for each Primary system training presentation:

d. Design intent.

e. Use of O&M Manuals.

f. Review of control drawings and schematics.

g. Interactions with other systems.

h. Special maintenance and replacement sources.

i. Tenant interaction issues.

3.1.3 Training Outline

The eOMSI Preparer shall provide each trainee in the course a written course outline, listing the major and minor topics to be discussed by the instructor on each day of the course. Provide the course outline 14 calendar days prior to the training.

3.1.4 Training Video Recording

Provide to the Contracting Officer two copies of the training course in DVD video recording format. Capture within the recording, in video and audio, all instructors' training presentations including question and answer periods with the trainees. Confirm proposed software, used to create the training is compatible with the using activity resources to play the training materials. The recording camera(s) shall be attended by a person during the recording sessions to assure proper size of exhibits and projections during the recording are visible and readable when viewed as training.

3.1.5 Unresolved Questions from Trainees

If, at the end of the training course, there are questions from trainees that remain unresolved, the instructor shall send the answers, in writing, to the Contracting Officer for transmittal to the trainees, and the training video shall be modified to include the appropriate clarifications.

3.1.6 Validation of Training Completion

Ensure that each attendee at each training session signs a class roster daily to confirm Government participation in the training. At the completion of all training, submit a signed validation letter that includes

a sample record of training for reporting what systems were included in the training, who provided the training, when and where the training was performed, and copies of the signed class rosters. Provide two copies of the validation to the Contracting Officer, one copy to the OMSI Preparer for inclusion into the OMSI documentation, and one copy to the LEED Documentation Preparer.

3.1.7 Quality Control Coordination

Coordinate the eOMSI training with the CA in Section 01 45 00.00 20 QUALITY CONTROL.

3.2 FIELD VALIDATION

Perform the field validation at the 100 percent - Prefinal submittal stage. Coordinate with the Contracting Officer to establish the field validation date, to ensure the availability of Government representatives. Validation without Government representative, unless waived, is not acceptable.

The purpose of the validation is to discuss final requirements needed to complete the eOMSI submittals and to conduct field verification. Field validation is used to verify the accuracy and completeness of the eOMSI Data and eOMSI Documents. This includes verifying that the systems and equipment in the eOMSI submittal accurately reflect the as-built conditions; verifying that O&M procedures are appropriate for the systems and equipment that they support; verifying that equipment nomenclature and system configurations are accurate; and confirming correct equipment tagging.

The eOMSI Preparer, Superintendent, Quality Control Manager, and the Design Quality Control Manager/ Commissioning Authority (CA) shall attend the field validation, to verify the accuracy of the eOMSI Submittal. The eOMSI Preparer shall perform the validation, document the results of the field validation and correct the final eOMSI submittal to reflect the changes identified.

-- End of Section --

SECTION 01 78 30.00 22

GIS DATA DELIVERABLES

09/14

PART 1 GENERAL

1.1 OBJECTIVE

The primary objective of this section is to provide detailed specifications for collection and delivery of geospatial data commonly referred to as Geographic Information System (GIS) data. Additionally, this section shall provide guidance to ensure that all GIS data delivered is compatible and will add value to the Marine Corps Base (MCB) Camp Lejeune Installation Geospatial Information and Services (IGI&S) GEOdatabase.

Failure to comply with the specifications outlined in this document will result in non-acceptance of data deliverables.

1.1.1 Point of Contact for MCB Camp Lejeune

The Points of Contact (POC) for assistance in preparation of GIS deliverables are:

Resident Officer In Charge Of Construction
Construction Manager (CM)
1005 Michael Drive
Camp Lejeune, NC 28547-2521
(910) 451-2581

Public Works Division
Project Manager (PM) or GIS
1005 Michael Road
Camp Lejeune, NC 28547-2521
(910) 451-2212

1.2 SUBMITTALS

Government approval is required for submittals with a "G" designation; submittals not having a "G" designation are for Contractor Quality Control approval. Submit the following in accordance with Section 01 33 00 SUBMITTAL PROCEDURES:

SD-11 Closeout Submittals

GIS Data Deliverables; G

1.3 GOVERNMENT GEOSPATIAL DATA AND SCHEMA

1. The IGI&S repository model schema is based on the Spatial Data Standards for Facilities, Infrastructure and Environment (SDSFIE) GEOFidelis Data Model with recurring business driven modifications and or adaptations.

   a. Data will be created and delivered by developing an ARCGIS Personal GEODatabase using ArcGIS 10.1 or higher if a higher version is being utilized by the Government at the time the deliverable is being developed.

   b. The Contractor shall verify the ArcGIS and schema version, via the CM or PM, at the commencement of this contract. All GIS DATA DELIVERABLES will be created in accordance with the current version and these specifications.

c. The Contractor is responsible for requesting the existing GIS Data, Schema and Domain Properties by means of a Data Request Package (DRP). Receipt of request will include Geospatial Database table structure, schema, Domain configuration, Attribute text format, i.e., case size as well as Meta Data information.

d. The DRP should be submitted prior to the start of data collection efforts and again on an as needed basis. The Contractor shall ensure that all GIS data has been created and delivered utilizing the most up to date IGI&S GEODatabase schema.

2. The Contractor shall submit a request for a Geospatial DRP to the CM or the PM.

a. Request shall be completely filled out and include the all information as instructed on the data request form.

b. Request only GIS data and or schema for feature classes that are relevant to the contract and within the boundary of project area.

c. Utilize associated Government modified domain structure(s).

d. Attach Scope of Work, which is defined by this GIS DATA DELIVERABLES section for each project request.

e. Return the DRP to the CM or PM for sponsorship and submittal to the Installation Geospatial Information & Services (IGI&S) Office.

f. Incomplete forms may delay receipt of the requested GIS data and Schema.

The following Spatial Data Standards for Facilities, Infrastructure, and Environment (SDSFIE) website may offer definitions for Feature data sets; Feature Classes and other applicable information. However, please note that specific Schema or Domain modifications are not available via this resource:

http://www.sdsfieonline.org/

1.3.1 Global Positioning System (GPS) and Spatial Reference Properties

GPS data shall be completed in accordance with the GPS Data Collection and Documentation Standards, Version 3 (or higher version if available at the time of this project) as prepared by Geographic Information Coordinating Council (GICC) Statewide Mapping Advisory Committee (SMAC) and adopted by the North Carolina Geographic Information Coordinating Council.

1. Prior to GPS efforts, ALL underground utilities shall be located utilizing a utility locating service in order to verify and obtain accurate feature locations.

2. Only bench marks included in the North Carolina Geodetic Survey Base Station Network shall be used for GPS data collection.

3. Mission planning is essential and Contractor shall utilize the best Position Dilution of Precision (PDOP) values for data accuracy.

4. Utility data, as identified in paragraph "ATTRIBUTE DATA COLLECTION AND

GPS REQUIREMENTS FOR SPECIFIC FEATURES" will be collected utilizing Survey Grade GPS data collection methods.

5. Infrastructure data, as identified in paragraph "ATTRIBUTE DATA COLLECTION AND GPS REQUIREMENTS FOR SPECIFIC FEATURES" shall be collected utilizing Sub-Foot or better GPS data collection methods.

   a. Spatial accuracy requirements for Survey and Sub-Foot grade data collection are as follows:

      i. Sub-Foot requirements

         1) All points shall be within + 12 inches

         2) 95 percent accuracy rate for all points.

      ii. Survey Grade requirements

         1) All points shall be within + 1 centimeter

         2) 98 percent accuracy rate for all points

6. Every effort shall be made to capture feature locations without using offsets. All Offsets will be noted in the Final Report for each feature.

7. Excessive offsets included in the Final Data, which shall be referenced in the Final Report, shall be reviewed for quality control.

   a. Resubmittal of data will be required if PDOP planning was not observed per this specification.

The following GEODatabase Coordinate Systems and Spatial Reference Properties should be utilized for Camp Lejeune:

1. Transverse Mercator (UTM) Zone 18N

   a. GRS 1980 spheroid

   b. North American Datum 1983 (NAD83) horizontal datum

   c. North American Vertical Datum 1988 (NAVD88) vertical datum.

2. Domain precision of 1000 which will result in a database accuracy of 1/1000 m

1.3.2 Demolished and Abandoned in Place (AIP) features

The Contractor shall reference all Demolished and or AIP features in the data delivered. Should the current feature data class attributes and or domains not reference AIP or demolished features, the Contractor shall be responsible for appropriately delivering these features by creating an associated "Demolished" or AIP feature class, i.e., CLJN.CL.WastewaterUtilitySegment.

The Contractor shall:

1. Utilize a blank schema for the associated feature class.

2. Rename associated feature class and add DEMO or AIP as a prefix, i.e., DEMO.CLJN.CL.WastewaterUtilitySegment, AIP.CLJN.CL.WastewaterUtilitySegment.

3. All demolished and or AIP features should provide existing spatial and non-spatial data which may be copied from existing data.

4. The Contractor will update attributes appropriately to include the following:

   a. Contract Number

   b. Drawing Number

   c. isDemolished

   d. dateDemolished or dateAIP

   e. Status

1.3.3 Creating a New Feature Class

Should a new feature class be required that is not readily available in the current GIS schema provided by the Government; the Contractor shall develop the feature class utilizing the schema consistent with the most current version of SDSFIE and document in the Final Report.

1. The Contractor shall include the following modifications (fields) to the schema structure and shall submit all information to the CM or PM for direction and final approval.

   a. Contract Number

   b. Drawing Number

1.3.4 GIS Topology Rules

All data must be created using GIS topology rules for polygons, points and lines, such as, but not limited to the following examples:

1. Polygons, Polylines and points rules; please reference illustrating topology rules in ArcGIS at www.esri.com.

2. Polygons must not have slivers.

3. All utility or infrastructure system data, which is, but is not limited to, transportation system and electrical, water, steam distribution, and wastewater collection, etc., will be created using GIS spatial connectivity rules which specify that vertex, edge and endpoints be snapped to features within the system.

4. Features will be snapped to the appropriate item.

5. Data will be created to represent the real world, for example, water, sewer and transportations systems, etc. will be drawn and or created in the direction of flow.

6. Utility and transportation systems will be created from source to sink, etc.

7. Abandoned In Place (AIP) utility lines will be located and updated in the current feature data set and identified as AIP in the attribute table.

1.3.5 Creation of Geographic Data Documentation (METADATA)

For each digital file delivered containing geographic information the Contractor shall provide documentation consistent with the Federal Geographic Data Committee (FGDC) Content Standards for Digital Geospatial Metadata (CSDGM). Both 'GEOFidelis Mandatory' and 'FGDC Mandatory' fields shall be completed for each geographic data set.

The Geospatial Information & Services (IGI&S) Metadata Authoring Guide is included in the DRP package.

Metadata generation tools included in the ArcGIS suite of software (or equivalent technology) shall be used in the production of the required metadata in XML format. Regardless of the tools used for metadata creation, the Contractor must ensure that the metadata is delivered in XML format and can be easily imported into the IGI&S GEODatabase. A copy of the FGDC metadata standard can be obtained on the internet at http://www.fgdc.gov or by contacting:

Federal Geographic Data Committee
590 National Center
Reston, Virginia 20192
Email: fgdc@fgdc.gov

(NOTE: The metadata should be formatted from the Government perspective, not the Contractor project perspective. Therefore such items as Point of Contact (POC) should be the POC currently associated with the data and NOT the Contractor's Project Manager. The Contractor shall use language and format consistent with existing metadata.)

1.3.6 New Feature Class Requirements

When developing a new feature class, the Contractor shall develop the initial structure consistent with the most current version of SDSFIE.

a. If further modifications to the database structure are required, the Contractor shall consult with the Government Project Manager for direction and final approval.

b. All new feature data classes shall be created in compliance with SDSFIE noted on the final report.

1.3.7 GIS Submittals Guidelines

All GIS Submittals will be submitted to the CM or PM and then analyzed by Government GIS personnel prior to final approval. Failure to comply with the specifications outlined in this document will result in non-acceptance of data deliverables.

1. Prior to any database development, the Contractor shall provide the Government with a technical approach document for review and approval. The Technical Approach document will describe in detail the Contractor's technical approach to designing and developing the database.

2. All attributes shall be populated in accordance with the "ATTRIBUTE DATA COLLECTION AND GPS REQUIREMENTS FOR SPECIFIC FEATURES" and shall be obtained via contract specifications, plans and record drawings.

3. The Contractor may be required to conduct research, collect data and make copies of reports and studies as necessary to verify existing and/or record drawing data. Record drawing data and closed contracts can be located in the Technical Records Section in the Public Works Department.

4. Raw GPS data and collection data files shall be included with every phase of delivery.

5. Actual spatial and non-spatial conditions in the field always supersede drawings. It is the Contractor's responsibility to locate and field verify all features to ensure attribute data and location is correctly recorded.

6. The Contractor shall submit a preliminary review of data at 15 to 25 percent contract completion to ensure specifications compliance.

7. The Contractor shall deliver digital geographic maps, GPS collection files and related data. All working text and documents and personal geodatabase shall be included for review in the draft and final delivery of data.

   a. All maps of GIS DATA DELIVERABLES will be ANSI C size and include a project title, contract number, scale, legend, standard symbology, attributes, i.e., building numbers, road names, segment diameters, etc.

8. The Contractor may be required to provide a technical consultant to meet on site.

9. The Contractor shall not deliver blank unused schema or feature class data with no attributes. Deliver only data pertinent to the contract that adds value to the GEODatabase per this section.

10. The Contractor shall deliver GIS Data at the end of each phase for all Phased Projects and Construction projects.

11. The Contractor accepts the responsibility to perform quality assurance for all data and related materials required in the section prior to submitting product to the Government.

12. The data will be analyzed for discrepancies in subject content, correct format in accordance with this statement of work, and compatibility with the existing GIS system as well as all other specifications in this section.

1.3.8 Formats, Versions and Guidelines

All data deliverables will be in the following formats and/or versions.

1. GIS data will be provided in an ArcGIS 10.1 or higher if a higher version is being used by the Government at the time of this project. The Contractor shall verify the ArcGIS version, via the CM or PM at the commencement of this contract.

2. Microsoft Office (MS) Suite data shall be delivered in MS 2010.

3. Microsoft Windows 7 operating system, unless otherwise approved by the Government.

4. All reports and maps will be delivered as a hard copy and in a searchable Adobe Portable Document Format (PDF).

5. All text, spreadsheet, and database files, reports and maps shall be delivered on Compact Disc read - only memory (CD-ROM) or Digital Versatile Disc read - only memory (DVD-ROM).

6. The Contractor shall verify required version(s) of software and schema, via the CM or PM.

7. Map submittals shall accompany each geospatial deliverable.

    a. Include ANSI C map for each project/area.

    b. Data should be labeled and attributed per specification.

    c. All maps should include the date, a legend, scale, contract title and number.

1.3.9 Final Report Requirements with additional Guidelines

The Contractor shall follow the following:

1. Specific procedures and list of equipment, software and versions that were utilized for the GPS data collection and creation of geospatial data.

2. Submit all GPS data files.

3. Provide the date(s) the IGI&S schema and geospatial data was received.

4. Provide steps taken to create the GEODatabase.

5. Provide details on any offsets to include justification as to why offsets were utilized and on which features and or points offsets were used.

6. Describe all modifications to the geodatabase to include the name of all new features classes, i.e., new, demolished or AIP.

7. Provide the source that was utilized for required attributes.

    a. Include an ANSI C size copy of all design drawings that were referenced in the attribute data. This information should be included in all phases of delivery to include draft and final reviews.

    b. Provide the overall utility site plan drawing(s)with each submittal.

8. Specify Deliverable "Draft #" or "Final Submittal" when data is submitted to the CM or PM for review.

9. Provide the name and contact information for the GIS Technical Point of Contact who can answer questions regarding the data deliverable.

10. GIS DATA DELIVERABLES must be provided in a format that does not require translation or pre/post processing prior to being loaded into the IGI&S GEODatabase.

11. Provide any miscellaneous information that the Contractor deems significant.

12. Provide the current version of the GIS DATA DELIVERABLES specification utilized for this contract submittal.

1.3.10 Ownership

All digital files, final hardcopy products, GPS raw data, source data acquired for this project, and related materials, including that furnished by the Government, shall become the property of the Government and will not be issued, posted, distributed, or published by the Contractor.

Note: No endorsement of software or hardware is implied.

1.4 ATTRIBUTE DATA COLLECTION AND GPS REQUIREMENTS FOR SPECIFIC FEATURES

1.4.1 **CLJN.CL.Common**

GPS and collect attribute data as specified for each feature listed with GPS accuracy as described in paragraph "Global Positioning System (GPS) and Spatial Reference Properties."

GPS and collect the following attributes:

CLJN.CL.RoadCenterline (The center of the road area)

a) roadCategory
b) numberOfLanes
c) speedLimit
d) isPaved Y/N
e) isOneWay Y/N
f) baseRoadName
g) dateConstructed
h) gisFeatureCollectionMethod
i) contractNumber
j) designDrawingNumber

1.4.2 **CLJN.CL.REAL.PROPERTY**

GPS and collect attribute data as specified for each feature listed with GPS accuracy as described in paragraph "Global Positioning System (GPS) and Spatial Reference Properties."

GPS and collect the following attributes:

CLJN.CL.AccessControl (A structure (manned or unmanned) intended to control access to an area)

a) assessControlIDPK - Structure ID until Field is created in schema
b) controlType

c) contractNumber
d) designDrawingNumber
e) Installation date
f) gisFeatureCollectionMethod
g) isRangeAccess Y / N
h) sdsFeatureName (Subtype of access control point / gate)
i) sdsFeatureDescription

CLJN.CL.AlternativeEnergyPoint (Locations used for the production of alternative energy sources, such as wind turbines, photovoltaic, etc)

a) alternativeEnergyIDPK - Structure ID until Field is created in schema
b) InstallDate
c) alternativeEnergyType
d) contractNumber
e) designDrawingNumber
f) gisFeatureCollectionMethod
g) isPortable
h) wattage
i) operationalStatus
j) panelType
k) sdsFeatureName
l) sdsFeatureDescription

CLJN.CL.AlternativeEnergyArea (Locations used for the production of alternative energy sources)

a) operationalStatus
b) isPortable
c) panelType
d) wattage (total)
e) gisFeatureCollectionMethod
f) contractNumber
g) designDrawingNumber
h) sdsFeatureName - Structure ID until Field is created in schema
i) Installationdate
j) sdsFeatureDescription

CLJN.CL.BoatRamp (A partially submerged hard surfaced structure on a shoreline for launching or retrieving vessels or vehicles)

a) boatRampIDPK - Structure ID until Field is created in schema
b) numberofLaunchLanes
c) dateConstructed
d) gisFeatureCollectionMethod
e) contractNumber
f) designDrawingNumber
g) sdsFeatureName
h) sdsFeatureDescription

CLJN.CL.Bridge (A structure used by vehicles that allows passage over or under an obstacle such as a river, chasm, mountain, road or railroad)

a) bridgeIDPK - Structure ID until Field is created in schema
b) bridgeType
c) isFixed
d) structureMaterial
e) dateConstructed
f) gisFeatureCollectionMethod
g) contractNumber
h) designDrawingNumber
i) sdsFeatureName
j) sdsFeatureDescription

CLJN.CL.Building (A roofed, floored and walled structure that is completely enclosed)

a) isDemolished
b) structureNumber
c) buildingType
d) buildingUse
e) heightMax
f) heightUOM
g) dateConstructed
h) dateDemolished
i) gisFeatureCollectionMethod
j) contractNumber
k) designDrawingNumber
l) sdsFeatureName
m) sdsFeatureDescription

CLJN.CL.BuildingFloorPlan (A linear representation of floor plans for buildings)

a) buildingFloorLevel
b) buildingIDFK - Structure ID until Field is created in schema
c) gisFeatureCollectionMethod
d) contractNumber
e) designDrawingNumber
f) sdsFeatureName
g) sdsFeatureDescription (Renovation Date)

CLJN.CL.DocksAndWharfs (A manmade water-land interface structure often for access to boats or ships)

a) typeOfDock
b) docksAndWharfsIDPK - Structure ID until Field is created in schema
c) accessType
d) dateConstructed
e) PurposeType
f) gisFeatureCollectionMethod
g) contractNumber
h) designDrawingNumber
i) sdsFeatureName
j) sdsFeatureDescription

CLJN.CL.Fence (A freestanding structure designed to restrict or

prevent movement across a boundary)

a) fenceIDPK - Structure ID until Field is created in schema
b) fenceMaterial
c) fenceUse
d) dateConstructed
e) gisFeatureCollectionMethod
f) contractNumber
g) designDrawingNumber
h) sdsFeatureName
i) sdsFeatureDescription

CLJN.CL.Marina (Any facility or area for the exchange of people or materials from land to water such as a port, harbor, marina, launch area or small craft facility)

a) marinaIDPK - Structure ID until Field is created in schema
b) marinaType
c) gisFeatureCollectionMethod
d) contractNumber
e) designDrawingNumber
f) sdsFeatureName
g) createdDate (Construction Date)
h) sdsFeatureDescription

CLJN.CL.NavigationalAid (A visual or electronic device, on the ground or airborne, which provides point-to-point guidance information or position data to aircraft in flight)

a) navigationalAidIDPK - Structure ID until Field is created in schema
b) navaidType
c) operatingSpectrum
d) gisFeatureCollectionMethod
e) contractNumber
f) designDrawingNumber
g) sdsFeatureName
h) sdsFeatureDescription

CLJN.CL.PavementSection (A pavement section is a portion of a pavement branch that differs in some aspect from other sections such that further segmentation is required to uniquely identify that section)

a) pavementSectionIDPK - Structure ID until Field is created in schema
b) pavementSectionType
c) isLighted
d) isSurfaced
e) operationalStatus
f) pavementSurfaceType
g) hasLinesPainted
h) dateConstructed
i) gisFeatureCollectionMethod
j) contractNumber
k) designDrawingNumber
l) sdsFeatureName

m) sdsFeatureDescription

CLJN.CL.RailTrack (A track is the main designation for describing a physical linear portion of the network)

a) railTrackIDPK - Structure ID until Field is created in schema
b) railConstructionType
c) operationalStatus
d) dateConstructed
e) gisFeatureCollectionMethod
f) contractNumber
g) designDrawingNumber
h) sdsFeatureName
i) sdsMetadataID
j) sdsFeatureDescription

CLJN.CL.RecreationArea (An area defined for recreational purposes)

a) recreationAreaIDPK - Structure ID until Field is created in schema
b) areaType
c) permittedHunting
d) recreationalFeatureType
e) dateConstructed
f) gisFeatureCollectionMethod
g) contractNumber
h) designDrawingNumber
i) sdsFeatureName
j) sdsFeatureDescription

CLJN.CL.RecreationTrail (A location providing physical activities which are mentally relaxing, such as running/walking, biking, or hiking)

a) recreationTrailIDPK - Structure ID until Field is created in schema
b) trailType
c) isPaved
d) dateConstructed
e) gisFeatureCollectionMethod
f) contractNumber
g) designDrawingNumber
h) sdsFeatureName
i) sdsFeatureDescription

CLJN.CL.StructureArea (A facility classified as other than a building or linear asset)

a) structureType
b) structureUse
c) structureNumber (structure Number)
d) structureMaterial
e) isDemolished
f) dateConstructed
g) dateDemolished
h) gisFeatureCollectionMethod

i) contractNumber
j) designDrawingNumber
k) sdsFeatureName
l) sdsMetadataID
m) sdsFeatureDescription

CLJN.CL.StructurePoint (Example: Flag poles; Point of Information Signs (POI) etc)

a) structureType
b) structureUse
c) structureNumber (Structure Number)
d) structureMaterial
e) isDemolished
f) dateConstructed
g) dateDemolished
h) gisFeatureCollectionMethod
i) contractNumber
j) designDrawingNumber
k) sdsFeatureDescription

CLJN.CL.Tower (A vertical projection, higher than its diameter, generally used for observation, storage, or electronic transmission)

a) towerUseType
b) heightMax
c) heightUOM
d) facilityName
e) towerType
f) structureUse
g) structureNumber
h) structureMaterial
i) isDemolished
j) dateConstructed
k) dateDemolished
l) gisFeatureCollectionMethod
m) contractNumber
n) designDrawingNumber
o) sdsFeatureDescription - street intersection

CLJN.CL.TrafficControlLight (A feature used to represent traffic lights)

a) trafficControlLightIDPK
b) realPropertyUniqueIdentifier
c) gisFeatureCollectionMethod
d) contractNumber
e) designDrawingNumber
f) sdsFeatureName
g) sdsMetadataID
h) sdsID
i) createdDate
j) createdBy
k) sdsFeatureDescription

CLJN.CL.Wall (A linear feature used for separation of facilities, ornamental decoration, or structural reinforcement (retaining wall)

a) wallIDPK - Structure ID until Field is created in schema
b) wallType
c) wallHeight
d) wallHeightUOM
e) dateConstructed
f) gisFeatureCollectionMethod
g) contractNumber
h) designDrawingNumber
i) sdsFeatureName
j) sdsFeatureDescription

1.4.3 CLJN.CL.REAL_PROPERTY_RESTRICTED

GPS and collect attribute data as specified for each feature listed with GPS accuracy as described in paragraph "Global Positioning System (GPS) and Spatial Reference Properties."

GPS and collect the following attributes:

CLJN.CL.Well (A shaft dug or drilled into the Earth for the purpose of extracting fluids from the subsurface, collecting environmental samples, injecting fluids into the subsurface or extracting contamination or other impurities from the subsurface)

a. wellPointIDPK - Structure ID until Field is created in schema
b. wellPurpose
c. wellResource
d. operationalStatus
e. isPotable
f. isWellActive
g. dateConstructed
h. gisFeatureCollectionMethod
i. contractNumber
j. designDrawingNumber
k. sdsFeatureName
l. sdsFeatureDescription

1.4.4 CLJN.CL.UTILITIES

GPS and collect attribute data as specified for each feature listed with GPS accuracy as described in paragraph "Global Positioning System (GPS) and Spatial Reference Properties."

GPS and collect the following attributes:

CLJN.CL.ElecUtilNode_eExteriorLight (Exterior lighting is supplied by local distribution systems and is generally the only service for which the electric utility installs, operates and maintains utilization equipment)

a) exteriorLightType
b) electricalNodeType
c) operationalStatus
d) isLED
e) cableCircuitName

f) hasSensor
g) lightingFixtureHeight
h) heightUOM
i) gisFeatureCollectionMethod
j) contractNumber
k) designDrawingNumber
l) equipmentInstallationDate
m) sdsFeatureName
n) sdsFeatureDescription

CLJN.CL.EnviDiscPoin_Stormwater (A specific location of an intentional discharge of stormwater into the environment)

a) isPermitted
b) stormwaterBasinIDFK Structure ID
c) gisFeatureCollectionMethod
d) contractNumber
e) designDrawingNumber
f) equipmentInstallationDate
g) sdsFeatureName
h) sdsFeatureDescription

CLJN.CL.GeothermalWell (A geothermal well is part of a central heating and/or cooling system that pumps heat to or from the ground)

a) geothermalWellIDPK
b) pipeMaterial
c) geothermalWellCasingMaterial
d) thermalInsulationMaterial
e) geothermalWellDepth
f) geothermalWellDepthUOM
g) downholePipeDiameter
h) downholePipeDiameterUOM
i) hasBentoniteSeal
j) hasPump
k) operationalStatus
l) gisFeatureCollectionMethod
m) contractNumber
n) designDrawingNumber
o) equipmentInstallationDate
p) sdsFeatureDescription - Associated Building Number

CLJN.CL.Impoundment_Stormwater (An accumulation of stormwater that is impounded by a dam or wier)

a) permitID
b) impoundmentType
c) waterSurfaceElevation
d) waterSurfaceElevationUOM
e) impoundmentIDPK - Structure ID until Field is created in schema
f) dateConstructed
g) gisFeatureCollectionMethod
h) contractNumber
i) designDrawingNumber
j) sdsFeatureName

k) sdsFeatureDescription

CLJN.CL.StormwaterUtilityNode_swInlet (The location at which stormwater is collected/received into the stormwater network)

a) stormwaterUtilityNodeIDPK - Structure ID until Field is created in schema
b) stormwaterNodeType
c) stormwaterInletType
d) numberOfPipes
e) gisFeatureCollectionMethod
f) contractNumber
g) designDrawingNumber
h) equipmentInstallationDate
i) sdsFeatureName
j) sdsFeatureDescription

CLJN.CL.StormwaterUtilitySegment (A subdivision of a stormwater network, particularly a pipeline or drainage ditch for the transport of stormwater, between the source, holding facilities, and/or treatment facilities)

a) diameter
b) diameterUOM
c) pipeMaterial
d) isLined
e) downstreamInvertElevation
f) upstreamInvertElevation
g) gisFeatureCollectionMethod
h) contractNumber
i) designDrawingNumber
j) equipmentInstallationDate
k) sdsFeatureName
l) sdsFeatureDescription

CLJN.CL.StorUtilNode_swManhole (A stormwater manhole is an underground concrete structure with a top opening used for collecting and routing stormwater runoff through underground pipes)

a) stormwaterNodeType
b) stormwaterUtilityNodeIDPK - Structure Number unless another field becomes available
c) numberOfPipes
d) operationalStatus
e) stormwaterBasinIDFK
f) gisFeatureCollectionMethod
g) contractNumber
h) designDrawingNumber
i) equipmentInstallationDate
j) sdsFeatureName
k) sdsFeatureDescription

CLJN.CL.ThermalUtilityNode_tFitting (The Thermal Fitting subclass represents the joint between two lines)

a) thermalNodeType
b) diameter
c) diameterUOM
d) operationalStatus
e) thermalFittingType
f) gisFeatureCollectionMethod
g) contractNumber
h) designDrawingNumber
i) equipmentInstallationDate
j) sdsFeatureName
k) sdsFeatureDescription

CLJN.CL.ThermalUtilitySegment (A subdivision of a thermal distribution network, particularly a pipeline for the transmission of chilled water, refrigerant, hot water, or steam)

a) thermalSegmentType
b) networkSubType
c) thermalPipeMaterial
d) pipeLocation
e) diameter
f) diameterUOM
g) thermalInsulationMaterial
h) isClosedLoopSystem
i) isMarkedForLocating
j) gisFeatureCollectionMethod
k) contractNumber
l) designDrawingNumber
m) equipmentInstallationDate
n) sdsFeatureName
o) sdsFeatureDescription

CLJN.CL.TherUtilNode_tProdStruc (Thermal production structures are facilities which produce steam, high-temperature water, low-temperature water, dual-temperature water or chilled water)

a) thermalUtilityNodeIDPK - Structure ID until Field is created in schema
b) thermalNodeType
c) designCapacity
d) designCapacityUOM
e) operationalStatus
f) gisFeatureCollectionMethod
g) contractNumber
h) designDrawingNumber
i) equipmentInstallationDate
j) sdsFeatureName
k) sdsFeatureDescription

CLJN.CL.TherUtilNode_tSystemValve (A thermal system valve is a device installed in a pipeline to isolate flow)

a) thermalNodeType
b) diameter
c) diameterUOM
d) operationalStatus

e) thermalValveType
f) gisFeatureCollectionMethod
g) contractNumber
h) designDrawingNumber
i) equipmentInstallationDate
j) sdsFeatureName
k) sdsFeatureDescription

CLJN.CL.UtilFeat_eSupportStructure (A structure that supports electric devices. Examples include poles, towers, Hframes, and push brace poles.)

a) utilityFeatureType
b) networkType
c) heightValue
d) heightUOM
e) utilityOwner
f) operationalStatus
g) cableCircuitName - List is available from CM or PM
h) gisFeatureCollectionMethod
i) contractNumber
j) designDrawingNumber
k) equipmentInstallationDate
l) sdsFeatureName
m) sdsFeatureDescription

CLJN.CL.UtilFeat_sPretreatmentDevice (A wastewater pretreatment device is a piece of equipment that removes contaminants before they enter the waste stream, i.e., OWS & Trap, etc.)

a) utilityFeatureIDPK - Structure ID until Field is created in schema
b) utilityFeatureType
c) operationalStatus
d) pretreatmentDeviceType
e) designCapacity
f) designCapacityUOM
g) gisFeatureCollectionMethod
h) contractNumber
i) designDrawingNumber
j) equipmentInstallationDate
k) sdsFeatureName
l) sdsFeatureDescription

CLJN.CL.UtilFeat_tUGEnclosureAccess (A point feature class for locating the access point to a thermal manhole junction)

a) utilityFeatureType - Structure ID until Field is created in schema
b) networkType
c) networkSubType
d) operationalStatus
e) gisFeatureCollectionMethod
f) contractNumber
g) designDrawingNumber
h) equipmentInstallationDate

i) sdsFeatureName
j) sdsFeatureDescription

CLJN.CL.UtilityFeature_sPumpStation (This is a collection of waste water Pump Station is a facility - this is used to show total capacity for the station)

a) utilityFeatureIDPK - Structure ID until Field is created in schema
b) utilityFeatureType
c) networkType
d) numberOfPumps
e) totalDesignCapacity
f) designCapacityUOM
g) totalRatedFlow
h) ratedFlowUOM
i) operationalStatus
j) gisFeatureCollectionMethod
k) contractNumber
l) designDrawingNumber
m) equipmentInstallationDate
n) sdsFeatureName
o) sdsFeatureDescription

CLJN.CL.UtilityFeature_sSCADASensor (The SCADA sensor is a feature that is used to remotely measure the status of network components)

a) utilityFeatureIDPK - Structure ID until Field is created in schema
b) utilityFeatureType
c) networkType
d) networkSubType
e) operationalStatus
f) gisFeatureCollectionMethod
g) contractNumber
h) designDrawingNumber
i) equipmentInstallationDate
j) sdsFeatureName
k) sdsFeatureDescription

CLJN.CL.UtilityFeature_sSepticTank (A wastewater septic tank is a small-scale anaerobic digester and leach field designed to treat wastewater from an individual facility, and is not connected to the wastewater collection system)

a) utilityFeatureType
b) networkType
c) storageTankProduct
d) tankLocation
e) volume
f) volumeUOM
g) isContained
h) utilityFeatureIDPK - Structure ID until Field is created in schema
i) isRegulated
j) numberLaterals

k) operationalStatus
l) gisFeatureCollectionMethod
m) contractNumber
n) designDrawingNumber
o) equipmentInstallationDate
p) sdsFeatureName
q) sdsFeatureDescription

CLJN.CL.UtilityFeature_sUtilityArea (The sUtilityArea is an area of land surrounding a wastewater utility asset or an area of land specifically designated for wastewater utility use, i.e., septic fields, storm water basin, Oil water separator, etc)

a) utilityFeatureIDPK - Structure ID until Field is created in schema
b) utilityFeatureType
c) wastewaterUtilityAreaType
d) networkType
e) networkSubType
f) designCapacity
g) designCapacityUOM
h) operationalStatus
i) gisFeatureCollectionMethod
j) contractNumber
k) designDrawingNumber
l) equipmentInstallationDate
m) sdsFeatureName
n) sdsFeatureDescription

CLJN.CL.WastewaterUtilityNode_sFitting (The wastewater fitting class represents the joint between two lines)

a) wastewaterNodeType
b) networkSubType
c) diameter
d) diameterUOM
e) operationalStatus
f) pipeMaterial
g) gisFeatureCollectionMethod
h) contractNumber
i) designDrawingNumber
j) equipmentInstallationDate
k) sdsFeatureName
l) sdsFeatureDescription

CLJN.CL.WastewaterUtilityNode_sManhole (The wastewater fitting class represents the joint between two lines)

a) wastewaterUtilityNodeIDPK - Structure ID until Field is created in schema
b) wastewaterNodeType
c) operationalStatus
d) numberOfPipes
e) pipeMaterial
f) diameter
g) diameterUOM

h) rimElevation
i) elevationUOM
j) gisFeatureCollectionMethod
k) contractNumber
l) designDrawingNumber
m) equipmentInstallationDate
n) sdsFeatureName
o) sdsFeatureDescription

CLJN.CL.WastewaterUtilityNode_sPump (A wastewater pump is a piece of equipment that adds energy to a fluid being conveyed through a pipe or other closed conduit)

a) wastewaterUtilityNodeIDPK - Structure ID until Field is created in schema
b) networkSubType
c) ratedFlow
d) ratedFlowUOM
e) operationalStatus
f) pumpHorsepower
g) contractNumber
h) designDrawingNumber
i) equipmentInstallationDate
j) gisFeatureCollectionMethod
k) sdsFeatureName
l) sdsFeatureDescription

CLJN.CL.WastewaterUtilitySegment (Wastewater Line - A pipeline for the transport of sewage or industrial waste between the source, holding facilities, and/or treatment facilities)

a) wastewaterSegmentType
b) networkSubType
c) pipeLocation
d) utilityOwner (CLJN / ONWASA)
e) operationalStatus
f) pipeMaterial
g) isLined
h) isMarkedForLocating
i) diameter
j) diameterUOM
k) gisFeatureCollectionMethod
l) contractNumber
m) designDrawingNumber
n) equipmentInstallationDate
o) sdsFeatureName
p) downstreamInvertElevation
q) upstreamInvertElevation
r) elevationUOM
s) slope
t) slopeUOM
u) sdsFeatureDescription

CLJN.CL.WastUtilNode_sCleanOut (A wastewater A clean out is an access point in a lateral used for maintenance purposes)

a) wastewaterNodeType
b) pipeMaterial
c) diameter
d) diameterUOM
e) operationalStatus
f) gisFeatureCollectionMethod
g) contractNumber
h) designDrawingNumber
i) equipmentInstallationDate
j) sdsFeatureName
k) sdsFeatureDescription

CLJN.CL.WastUtilNode_sSystemValve (A system valve is a facility that is fitted to a pipeline or orifice in which the closure member is either rotated or moved transversely or longitudinally in the waterway so as to control or stop the flow)

a) wastewaterUtilityNodeIDPK - Structure ID until Field is created in schema
b) wastewaterNodeType
c) networkSubType
d) wastewaterValveMaterial
e) diameter
f) diameterUOM
g) operationalStatus
h) wastewaterValveType
i) gisFeatureCollectionMethod
j) contractNumber
k) designDrawingNumber
l) equipmentInstallationDate
m) sdsFeatureName
n) sdsFeatureDescription

CLJN.CL.WastUtilNode_sTreatmentPlant (A facility designed to treat wastewater using physical, chemical and/or biological processes prior to discharge into receiving waters)

a) wastewaterUtilityNodeIDPK - Structure ID until Field is created in schema
b) wastewaterNodeType
c) designCapacity
d) designCapacityUOM
e) operationalStatus
f) buildingIDFK
g) gisFeatureCollectionMethod
h) contractNumber
i) designDrawingNumber
j) equipmentInstallationDate
k) sdsFeatureName
l) sdsFeatureDescription

1.4.5 CLJN.CL.UTILITIES_RESTRICTED

GPS and collect attribute data as specified for each feature listed with GPS accuracy as described in paragraph "Global Positioning System (GPS) and Spatial Reference Properties."

GPS and collect the following attributes:

CLJN.CL.ElectricalUtilityNode_eSwitch (Electrical Switches are installed at strategic locations throughout distribution feeder circuits)

a) normalPosition
b) operationalStatus
c) electricalSwitchType
d) electricalSwitchInstallation
e) cableCircuitName
f) numberOfPhases
g) numberOfSwitches
h) voltage
i) utilityOwner
j) gisFeatureCollectionMethod
k) contractNumber
l) designDrawingNumber
m) equipmentInstallationDate
n) sdsFeatureName
o) sdsFeatureDescription

CLJN.CL.ElectricalUtilitySegment (A subdivision of an electrical distribution network, particularly a line for the transmission of electricity)

a) electricalSegmentType
b) electricCableMaterial
c) pipeLocation
d) voltage
e) utilityOwner
f) operationalStatus
g) electricalCableClass
h) electricCableMaterialSubtype
i) insulationMaterial
j) conductSize
k) neutralSize
l) numberOfConduct
m) numberOfNeutral
n) numberOfPhases
o) cableCircuitName - List is available from CM or PM
p) gisFeatureCollectionMethod
q) contractNumber
r) designDrawingNumber
s) equipmentInstallationDate
t) sdsFeatureName
u) sdsFeatureDescription

CLJN.CL.ElecUtilNode_eGenerator (Generator is a power source for providing electricity. Generators may be primary or standby power sources)

a) electricalNodeType
b) operationalStatus
c) modelNumber
d) serialNumber
e) isPortable

f) fuelCapacity
g) fuelCapacityUOM
h) voltage
i) generatorKVARating
j) cableCircuitName - List is available from CM or PM
k) osdSiteIDFK
l) gisFeatureCollectionMethod
m) contractNumber
n) designDrawingNumber
o) equipmentInstallationDate
p) sdsFeatureName (Manufacture)
q) sdsFeatureDescription(Structure Number)

CLJN.CL.ElecUtilNode_eMeterPoint (A water meter point represents the location of the metering device.)

a) electricalUtilityNodeIDPK - Structure Number unless another field becomes available
b) electricalNodeType
c) operationalStatus
d) utilityOwner
e) cableCircuitName - List is available from CM or PM
f) gisFeatureCollectionMethod
g) contractNumber
h) designDrawingNumber
i) equipmentInstallationDate
j) sdsFeatureName
k) sdsMetadataID
l) sdsID
m) sdsFeatureDescription

CLJN.CL.ElecUtilNode_eTransformer (The Transformer feature class captures information about distribution and power transformers)

a) electricalUtilityNodeIDPK - Structure ID until Field is created in schema
b) electricalNodeType
c) transformerType
d) operationalStatus
e) modelNumber
f) serialNumber
g) numberOfTransformers
h) primaryVoltage
i) secondaryVoltage
j) totalTransformerKVARating
k) transformerKVADescription
l) transformerCapacityDescription
m) cableCircuitName - List is available from CM or PM
n) electricalFacilitySiteIDFK - Source
o) gisFeatureCollectionMethod
p) contractNumber
q) designDrawingNumber
r) equipmentInstallationDate
s) sdsFeatureName (Manufacture)
t) sdsFeatureDescription

CLJN.CL.ElecUtilNode_eVoltageRegulator (Voltage regulators vary the ac supply or source voltage to the customer to maintain the voltage within desired limits)

a) electricalUtilityNodeIDPK - Structure ID until Field is created in schema
b) electricalNodeType
c) operationalStatus
d) facilityIDFK
e) primaryVoltage
f) secondaryVoltage
g) numberOfPhases
h) cableCircuitName - This available from CM or PM
i) electricalFacilitySiteIDFK - Structure ID until Field is created in schema
j) gisFeatureCollectionMethod
k) contractNumber
l) designDrawingNumber
m) equipmentInstallationDate
n) sdsFeatureName
o) sdsFeatureDescription

CLJN.CL.POLUtilityNode_oDispenser (A fuel dispenser is a machine at a fueling station that is used to pump fuel into vehicles or AGE equipment)

a) pOLUtilityNodeIDPK
b) polNodeType
c) networkSubType
d) operationalStatus
e) gisFeatureCollectionMethod
f) contractNumber
g) designDrawingNumber
h) equipmentInstallationDate
i) sdsFeatureName
j) sdsFeatureDescription (Structure Number)

CLJN.CL.UtilFeat_eElecFacilitySite (Polygon feature class to define boundaries of electrical facility stations)

a) utilityFeatureType
b) networkType
c) networkSubType
d) operationalStatus
e) cipIDFK
f) numberOfCircuits
g) numberOfSpareBays
h) numberOfTransformers
i) voltageIn
j) cableCircuitName
k) utilityOwner
l) gisFeatureCollectionMethod
m) contractNumber
n) designDrawingNumber
o) equipmentInstallationDate
p) sdsFeatureName
q) sdsFeatureDescription (Structure Number)

CLJN.CL.UtilFeat_eUndergroundStructure (UndergroundStructure is a simple junction feature that includes vaults and manholes that house and protect electrical equipment)

a) utilityFeatureIDPK (Structure Number)
b) utilityFeatureType
c) networkType
d) networkSubType
e) operationalStatus
f) electricalJunctionType (manhole, Junction Box, Handhole, etc)
g) diameter
h) diameterUOM
i) numberOfCables
j) rimElevation
k) rimElevationUOM
l) cableCircuitName List is available from CM or PM
m) gisFeatureCollectionMethod
n) contractNumber
o) designDrawingNumber
p) equipmentInstallationDate
q) sdsFeatureName
r) sdsFeatureDescription

CLJN.CL.UtilFeat_oPumpingFacility (A structure, typically a building, containing pumps, filters, and controls as part of a larger fuel handling system)

a) utilityFeatureIDPK - Structure ID until Field is created in schema
b) utilityFeatureType
c) networkType
d) networkSubType
e) operationalStatus
f) gisFeatureCollectionMethod
g) contractNumber
h) designDrawingNumber
i) equipmentInstallationDate
j) sdsFeatureName
k) sdsFeatureDescription

CLJN.CL.UtilFeat_wUGEnclosureAccess (A point feature class for locating the access point to a water manhole junction)

a) utilityFeatureIDPK - Structure Number unless another fields becomes available
b) networkType
c) numberOfPipes
d) groundElevation
e) elevationUOM
f) operationalStatus
g) waterServiceAreaIDFK
h) gisFeatureCollectionMethod
i) contractNumber
j) designDrawingNumber

k) equipmentInstallationDate
l) sdsFeatureName
m) utilityFeatureType
n) sdsFeatureDescription

CLJN.CL.WaterUtilityNode_wFitting (The water fitting class represents the joint between two lines in the water network)

a) waterNodeType
b) diameter
c) diameterUOM
d) operationalStatus
e) waterFittingType
f) waterServiceAreaIDFK
g) gisFeatureCollectionMethod
h) contractNumber
i) designDrawingNumber
j) equipmentInstallationDate
k) sdsFeatureName
l) sdsFeatureDescription

CLJN.CL.WaterUtilityNode_wHydrant (A water distribution point that enables fire fighters to attach fire hoses)

a) waterNodeType
b) networkSubType
c) operationalStatus
d) waterHydrantConnectionType
e) waterServiceAreaIDFK
f) gisFeatureCollectionMethod
g) contractNumber
h) designDrawingNumber
i) equipmentInstallationDate
j) sdsFeatureName
k) sdsFeatureDescription

CLJN.CL.WaterUtilityNode_wMeterPoint (A water meter point represents the location of the metering device)

a) waterNodeType
b) networkSubType
c) operationalStatus
d) WaterUtilityNode_wMeterPoint - Structure ID until Field is created in schema
e) waterServiceAreaIDFK
f) gisFeatureCollectionMethod
g) contractNumber
h) designDrawingNumber
i) equipmentInstallationDate
j) sdsFeatureName
k) sdsFeatureDescription

CLJN.CL.WaterUtilityNode_wSystemValve (A valve used to regulate pressure, isolate, throttle flow, prevent backflow, and relieve pressure)

a) diameter
b) diameterUOM
c) operationalStatus
d) waterValveType
e) valveElevation
f) groundElevation
g) elevationUOM
h) waterServiceAreaIDFK
i) gisFeatureCollectionMethod
j) contractNumber
k) designDrawingNumber
l) equipmentInstallationDate
m) sdsFeatureName
n) sdsFeatureDescription

CLJN.CL.WaterUtilitySegment (A subdivision of a water distribution network, particularly a distribution pipeline)

a) waterSegmentType
b) networkSubType
c) pipeLocation
d) waterPipeMaterial
e) diameter
f) diameterUOM
g) utilityOwner
h) operationalStatus
i) waterType
j) waterSegmentUse
k) waterServiceAreaIDFK
l) gisFeatureCollectionMethod
m) contractNumber
n) designDrawingNumber
o) equipmentInstallationDate
p) sdsFeatureName
q) isMarkedForLocating
r) sdsFeatureDescription

CLJN.CL.WateUtilNode_wProdStructure (Water production structures are facilities which produce raw or treated water)

a) waterUtilityNodeIDPK - Structure ID until Field is created in schema
b) waterNodeType
c) networkSubType
d) designCapacity
e) designCapacityUOM
f) operationalStatus
g) gisFeatureCollectionMethod
h) contractNumber
i) designDrawingNumber
j) equipmentInstallationDate
k) sdsFeatureName
l) sdsFeatureDescription

CLJN.CL.WateUtilNode_wStorageStructure (Water storage structures are

facilities that store large volumes of water - Water Tank)

a) waterUtilityNodeIDPK - Structure ID until Field is created in schema
b) waterNodeType
c) storageTankProduct
d) volume
e) volumeUOM
f) isContained
g) isRegulated
h) operationalStatus
i) diameter
j) diameterUOM
k) groundElevation
l) invertElevation
m) overflowElevation
n) topElevation
o) elevationUOM
p) tankHeight
q) waterServiceAreaIDFK
r) gisFeatureCollectionMethod
s) contractNumber
t) designDrawingNumber
u) equipmentInstallationDate
v) sdsFeatureName
w) sdsFeatureDescription

1.4.6 Non-Compliance

Failure to follow the specification outlined in this document will result in non-acceptance of data deliverable.

Note: Geospatial data delivery does not replace record drawing requirements.

PART 2 PRODUCTS

Not Used.

PART 3 EXECUTION

Not Used.

-- End of Section --

THIS PAGE HAS BEEN INTENTIONALLY LEFT BLANK

SECTION 01 91 13.00 22

GENERAL COMMISSIONING REQUIREMENTS FOR CONSTRUCTION
09/14

PART 1 GENERAL

1.1 REFERENCES

The publications listed below form a part of this section to the extent referenced. The publications are referred to within the text by the basic designation only.

NATIONAL ENVIRONMENTAL BALANCING BUREAU (NEBB)

NEBB PROCEDURAL STANDARDS	(2005) Procedural Standards for TAB (Testing, Adjusting and Balancing) Environmental Systems

U.S. GREEN BUILDING COUNCIL (USGBC)

LEED GBDC Ref Guide	(2009; R 2010) LEED Reference Guide for Green Building Design, Construction and Major Renovations of Commercial and Institutional Buildings including Core & Shell and K-12 Projects
LEED NC	(2009) Leadership in Energy and Environmental Design(tm) New Construction Rating System

1.2 COMMISSIONING - GENERAL

Commissioning is a quality-oriented, systematic process for achieving, verifying, and documenting that the performance of facilities, systems, and assemblies meet defined objectives and criteria. The commissioning process shall include specific tasks to be conducted during each phase in order to verify that design, construction, documentation, and training provided for this facility meets the Government's project requirements.

Commissioning shall:

a. Verify that applicable equipment and systems are installed according to the contract documents, manufacturer's recommendations, industry accepted minimum standards, and equipment and systems have received adequate operational checkout by the Contractor.

b. Verify and document proper performance of equipment and systems.

c. Verify that O&M documentation prepared for this project is accurate and complete.

d. Verify that all components requiring servicing can be accessed, serviced and removed without disturbing nearby components including ducts, piping, cabling or wiring.

e. Verify that the Government's operating personnel are adequately trained.

It is the intent of the Government that the commissioning process shall comply with the requirements of LEED NC prerequisite EAp1 - Fundamental Commissioning. Refer to LEED GBDC Ref Guide for reference.

The Commissioning Authority (CxA) shall be provided by the Government or its representative and shall direct and coordinate the project commissioning activities.

Commissioning Team: A team comprised of the Government's Commissioning Authority (CxA), Government Project Manager, Designer of Record (DOR), Contractor, subcontractors, and O&M personnel. Commissioning Team members shall have the authority to act on behalf of the entity he or she represents relative to the commissioning process. The Commissioning Team is explicitly organized to implement the commissioning process through collaborative and coordinated action. All team members shall work together to fulfill their contracted responsibilities and meet the objectives of the contract documents.

The commissioning process shall not take away from nor reduce the responsibility of the system designers or Contractor to provide a finished and fully functioning product.

Contractor shall include the cost of his commissioning activities in the total contract price.

Contractor is responsible for providing commissioning support for the equipment he supplies. Include cost of all special tools and instruments required for testing, operating, and maintaining equipment according to these contract documents in the total contract price.

1.3 RELATED UFGS SECTIONS

Refer to the following Sections for system specific commissioning requirements:

a. Section 01 33 29 SUSTAINABLE REPORTING.

b. Section 22 08 00.00 22 COMMISSIONING OF PLUMBING SYSTEMS for commissioning process activities for plumbing systems.

c. Sections 23 08 00.00 22 COMMISSIONING OF HVAC SYSTEMS and 23 05 93 TESTING, ADJUSTING AND BALANCING FOR HVAC for commissioning process activities for HVAC systems and equipment.

d. Section 26 08 10.00 22 COMMISSIONING OF ELECTRICAL SYSTEMS for commissioning process requirements for the facility electrical power and lighting control systems.

e. The responsible Fire Protection Engineer will function as the commissioning agent for fire suppression and fire alarm systems.

1.4 SUBMITTAL REQUIREMENTS

The CxA will provide Contractor with a specific request for the type of submittal documentation the CxA will require to facilitate the commissioning work. These requests will be integrated into the normal submittal process and protocol of the construction team. At minimum, the request will include the manufacturer and model number, the manufacturer's printed installation and detailed startup procedures, full sequences of

operation, O&M data, and performance data, any performance test procedures, control drawings and details of manufacturer's tests and calibration procedures. In addition, the installation and checkout materials that are actually shipped with/inside the equipment and the actual field checkout sheet forms to be used by the factory or field technicians shall be submitted to the CxA. All documentation requested by the CxA will be included by the Contractor in the O&M manual.

The CxA will review and approve submittals related to the commissioned equipment for conformance to the contract documents as it relates to the commissioning process, to the performance of the equipment and adequacy of information for developing test procedures. This review is intended primarily to aid in the development of performance procedures and only secondarily to verify compliance with equipment specifications. The CxA will notify the Government of items missing or areas that are not in conformance with contract documents and which require resubmission.

These submittals to the CxA do not constitute compliance for O&M manual documentation. The O&M manuals are the responsibility of the contractor, though the CxA will review and approve them for adequacy with respect to the commissioning review.

1.5 DEFINITIONS

Acceptance: Acceptance is a formal action, to declare that some aspect of the project meets defined requirements, thus permitting subsequent activities to proceed.

Acceptance Phase Commissioning: Commissioning tasks executed after the construction has been completed, all Site Observations and Static Tests have been completed and all Pre-Functional Testing has been completed and accepted. The main commissioning activities performed during this phase are verification that the installed systems are functional as verified by conducting Functional Performance tests and Government Training.

Basis of Design (BOD): The Engineer's Basis of Design is comprised of two components: the Design Criteria and the Design Narrative, these documents record the concepts, calculations, decisions, and product selections used to meet the Owner's Project Requirements (OPR) and to satisfy applicable regulatory requirements, standards, and guidelines. See also: Design Narrative.

Benchmarks: Benchmarks are the comparison of a building's water and energy usage to other similar buildings and to the building itself.

Building Commissioning: Commissioning of building systems such as Building Envelope, HVAC, Electrical, Special Electrical Fire Alarm, Security & Communications, Plumbing and Fire Protection.

Calibrate: The act of comparing an instrument of unknown accuracy with a standard of known accuracy to detect, correlate, report, or eliminate by adjustment any variation in the accuracy of the tested instrument.

Checklists: Lists of data or inspections that should be verified to ensure proper system or component installation, operation and function. Verification checklists are developed and used during all phases of the commissioning process to verify that the Owner's Project Requirements (OPR) are being achieved.

Government's Commissioning Authority (CxA): The entity, who plans, schedules and coordinates the commissioning team to implement the Commissioning Process. Where CxA is used it means the Commissioning Authority, members of his staff or appointed members of the commissioning team.

Commissioning Issue: Any condition that adversely affects the commissionability, operability, maintainability or functionality of a system, equipment or component. Any condition that is in conflict with the Contract Documents and/or performance requirements of the installed systems and components. Can also be referred to as "Deficiency".

Commissioning Observation: An issue that does not conform to the project OPR, contract documents or standard industry best practices.

Commissioning Plan: A document that outlines the scope and defines responsibilities, processes, schedules, and the documentation requirements of the Commissioning Process.

Commissioning Process: A quality focused process for enhancing the delivery of a project. The process focuses upon verifying and documenting that the facility and all of its systems, components, and assemblies are planned, designed, installed, tested, can be operated, and maintained to meet the Owner's Project Requirements.

Commissioning Report (Cx): The final document which presents the commissioning process results for the project. Cx reports include an executive summary, the commissioning plan, issue log, correspondence, and all appropriate check sheets and test forms.

Commissioning Design Review: A commissioning design review is a collaborative review of the design professionals design documents for items pertaining to the following: owner's project requirements; basis of design; operability and maintainability (O&M) including documentation; functionality; training; energy efficiency, control systems' sequence of operations including building automation system features; commissioning specifications and the ability to functionally test the systems.

Commissioning Team: A team comprised of the Government's Commissioning Authority (CxA), Government Project Manager, DOR, Contractor, and O&M personnel. Commissioning Team members shall have the authority to act on behalf of the entity he or she represents relative to the commissioning process. The Commissioning Team is explicitly organized to implement the commissioning process through collaborative and coordinated action.

Contractor: "Contractor" includes all subcontractors, vendors, etc. that are responsible to the Contractor.

Construction Phase Commissioning: All commissioning efforts executed during the construction process after the design phase and prior to the Acceptance Phase Commissioning.

Contract Documents: The documents binding on parties involved in the construction of this project (drawings, specifications, change orders, amendments, contracts, commissioning plan, etc.

Corrective Action: The implementation of actions that correct a tested or observed commissioning issue.

Data Logging: The monitoring and recording of temperature, flow, current, status, pressure, etc. of equipment using stand-alone data recorders.

Deferred System Functional Test: Tests that cannot be completed at the end of the acceptance phase due to ambient conditions, schedule issues or other conditions preventing testing during the normal acceptance testing period.

Design Criteria: A listing of the projects design requirements, including its source. These are used during the design process to show the design element meets the OPR.

Design Intent: The overall term that includes the OPR and the BOD. It is a detailed explanation of the ideas, concepts, and criteria that are defined by the Government to be important. The design intent documents are utilized to provide a written record of these ideas, concepts and criteria.

Design Phase Commissioning: All commissioning tasks executed during the design phase of the project.

Functional Performance Test (FPT): Functional performance tests are tests that are intended to prove functionality of the component or system using direct observation and monitoring methods. Functional Performance Tests include static testing, dynamic testing, failure modes, and integrated systems testing. FPT tests are done after all Pre-Functional Checklists are complete. Also called Systems Functional Performance Test, Functional Test, or Integrated Systems Test.

Functional Test Procedure: A written protocol that defines methods, steps, personnel, and acceptance criteria for tests conducted on components, equipment, assemblies, systems, and interfaces among systems.

Industry Accepted Best Practice: A design component or construction process that has achieved industry consensus for quality performance and functionality.

Installation Verification: Observations or inspections that confirm the system or component has been installed in accordance with the contract documents and to industry accepted best practices.

Issues Log: A formal and ongoing record of issues, observations, problems or concerns - and their resolution - that have been raised by members of the commissioning team during the course of the commissioning process.

Manual Test: Testing using hand-held instruments, immediate control system readouts or direct observation to verify performance (contrasted to analyzing monitored data taken over time to make the 'observation').

Operations and Maintenance (O&M) Manual: O&M manuals describe key components of each system or piece of equipment and explain how they should be operated and maintained for optimum performance.

Owner's Project Requirements (OPR): A written document that details the project requirements and the expectations of how the building and its systems will be used and operated. These include project goals, measurable performance criteria, cost considerations, benchmarks, success criteria, and supporting information.

Precision: The ability of an instrument to produce repeatable readings of the same quantity under the same conditions. The precision of an instrument

refers to its ability to produce a tightly grouped set of values around the mean value of the measured quantity.

Pre-Design Phase Commissioning: Commissioning tasks performed prior to the commencement of design activities that includes project programming and the development of the commissioning process for the project.

Pre-Functional Checklist: A form used by the contractor to verify that appropriate components are onsite, correctly installed, set up, calibrated, functional and ready for functional testing.

Sampling: Performing observation, review, testing or other verification on only a fraction of the total number of identical or near identical pieces of equipment, drawings, events, etc. Sampling techniques include random statistical sampling and less formal professional judgment methods.

Site Observation Visit: On-site inspections and observations made by the Commissioning Authority for the purpose of verifying component, equipment, and system installation, to observe contractor testing, equipment start-up procedures, or other purposes.

Site Observation Reports: Reports of site inspections and observations made by the Commissioning Authority. Observation reports are intended to provide early indication of an installation issue which will need correction or analysis.

Start Up Tests: Tests that validate the component or system is ready for automatic operation in accordance with the manufacturers' requirements.

Static Tests: Tests or inspections that validate a specified static condition such as pressure testing. Static tests may be specification or code initiated.

Systems Manual: A system-focused composite manual organized by system which contains the information needed to optimally operate the building systems. Much of the Systems Manual is not found in traditional vendor O&M Manuals. For reference, ASHRAE includes all maintenance and design documentation in their definition of Systems Manual.

Test Procedure: A written protocol that defines methods, personnel, and expectations for tests conducted on components, equipment, assemblies, systems, and interfaces among systems.

Testing: The use of specialized and calibrated instruments to measure parameters such as: temperature, pressure, vapor flow, air flow, fluid flow, rotational speed, electrical characteristics, velocity, and other data in order to determine performance, operation, or function.

Testing, Adjusting, and Balancing (TAB): A systematic process or service applied to heating, ventilating and air-conditioning (HVAC) systems and other environmental systems to achieve and document air and hydronic flow rates. The standards and procedures for providing these services are referred to as "Testing, Adjusting, and Balancing" and are described in NEBB PROCEDURAL STANDARDS.

Thermal Scans: Thermographic pictures taken with an Infrared Thermographic Camera. Thermographic pictures show the relative temperatures of objects and surfaces and are used to identify leaks, thermal bridging, thermal intrusion, electrical overload conditions, moisture containment, and

insulation failure.

Training Plan: A written document that details, in outline form, the expectations of the operator training. Training agendas should include instruction on how to obtain service, operate, startup, shutdown and maintain all systems and components of the project.

Unresolved Commissioning Issue: Any Commissioning Issue that, at the time that the Final Report or the Amended Final Report is issued that has not been either resolved by the Contractor or accepted by the Government.

Validation: The process by which work is verified as complete and operating correctly:

a. First party validation occurs when a firm or individual verifying the task is the same firm or individual performing the task.

b. Second party validation occurs when the firm or individual verifying the task is under the control of the firm performing the task or has other possibilities of financial conflicts of interest in the resolution (Architects, Designers, General Contractors and Third Tier Subcontractors or Vendors).

c. Third party validation occurs when the firm verifying the task is not associated with or under control of the firm performing or designing the task.

Verification: The process by which specific documents, components, equipment, assemblies, systems, and interfaces among systems are confirmed to comply with the criteria described in the Contract Documents and Owner's Project Requirements.

Warranty Period: Period of time in which the contractor is responsible for equipment repairs following turnover to the Government. The warranty period is defined in the construction contract.

Warranty Phase Commissioning: Commissioning efforts executed after a project has been completed and accepted by the Government. Warranty Phase Commissioning includes follow-up on verification of system performance, measurement and verification tasks and assistance in identifying warranty issues and enforcing warranty provisions of the construction contract.

Warranty Visit: A commissioning meeting and site review where all outstanding warranty issues and deferred testing is reviewed and discussed.

1.6 SYSTEMS TO BE COMMISSIONED

Commissioning of a system or systems specified for this project is part of the construction process. Documentation and testing of these systems, as well as training of the Government's personnel, is required in cooperation with the Government and the Commissioning Authority.

1.6.1 Building Envelope (Division 07 and Division 08)

The following systems shall be commissioned as part of this project:

a. Roofs: Asphalt shingles, slate shingles, wood shingles, clay roof tiles, built-up bituminous, modified bituminous, EPDM, PVC, fluid-applied, sprayed polyurethane, flashing & sheet metal, metal

roofing, roof specialties, and roof accessories.

b. Exterior Insulation and Finish Systems (EIFS).

c. Curtain Wall Systems: Mullions, glazing, and sealing

d. Exterior Doors: Revolving, glass leaf, emergency exit, and service

e. Exterior Windows: Aluminum, steel, glazing, storm

f. Louvers and Vents

g. Sealants: Caulking, mechanical seals, and wind and vapor barriers

h. Air Barrier Systems

i. Vapor Barrier Systems

1.6.2 Fire Suppression (Division 21)

The following systems shall be commissioned as part of this project:

a. Fire Protection Systems: Fire pump, jockey pump, fire pump automatic transfer switch/controller, Wet-pipe fire suppression, dry-pipe fire suppression, pre-action fire suppression, dry system air compressors and motors, clean agent fire suppression, and foam fire suppression.

b. Smoke Control Systems: Smoke evacuation, smoke control, and stair pressurization.

1.6.3 Plumbing (Division 22)

Provide Plumbing commissioning as required in Section 22 08 00.00 22 COMMISSIONING OF PLUMBING SYSTEMS.

1.6.4 HVAC (Division 23)

Provide HVAC commissioning as required in Section 23 08 00.00 22 COMMISSIONING OF HVAC SYSTEMS.

1.6.5 Electrical (Divisions 26 and 33)

Provide electrical commissioning as required in Section 26 08 10.00 22 COMMISSIONING OF ELECTRICAL SYSTEMS.

1.6.6 Communications (Divisions 27 and 33)

Provide Communications commissioning as required in Section 26 08 10.00 22 COMMISSIONING OF ELECTRICAL SYSTEMS.

1.6.7 Electronic Safety and Security (Division 28)

The following systems shall be commissioned as part of this project:

a. Fire Detection and Alarm Systems: Master panel and software, addressable units - i.e. pull stations, flow detectors, heat detectors, etc., controls and alarm functions, horns/bells/door releases and other output devices, and fire command center functions - stairwell communications, stairwell pressurization fan start, mechanical systems

shutdowns.

b. Intrusion Detection Systems

c. Access Control Systems

d. Video Surveillance Systems / Closed Circuit Control Systems

e. Radio Communications Systems

f. Chemical, Biological, Radiological, Nuclear (CRRNE) Detection Systems

1.6.8 Site Utility Systems

The following systems shall be commissioned as part of this project:

a. Sanitary Sewage Lift Stations: Lift station sump or tank level controls, pump alternator, alarms and alarm panel, pumps and motors.

b. Steam Condensate Pump Stations: Condensate receivers and transfer pumps, motors, controls, pump alternator, alarms and instrumentation, and safeties.

c. Storm Drainage Pump Systems: Sump level controls, pump alternator, alarms and alarm panel, pumps and motors.

1.6.9 Other Systems

The following systems shall be commissioned as part of this project:

a. Solar Systems: Solar water heaters, transpired solar collectors, and Photovoltaic.

b. Renewable Energy Systems: Wind turbines, waste-to-energy, and geo-thermal.

1.7 COMMISSIONING PLAN

The Government's CxA will develop the Commissioning Plan which shall be coordinated with and incorporated into the Contractor's project schedule, approved by the Government. The Commissioning Plan outlines the scope and defines responsibilities, processes, schedules, and the documentation requirements of the commissioning process. The Commissioning Plan will be refined, with the assistance and input of the Contractor, throughout construction. The Contractor, as an integral member of the Commissioning Team, shall support the CxA and the Commissioning Team throughout the contract. The components of the Commissioning Plan are outlined in this section and other technical sections in the contract documents.

The Commissioning Plan shall naturally evolve over the course of construction. The Government's CxA shall add, modify and refine the commissioning procedures to suit field conditions and actual manufacturer's equipment, incorporate test data and procedure results, and provide detailed scheduling for all commissioning tasks. Contractor should reasonably expect modifications to the Commissioning Plan throughout construction.

1.8 RESPONSIBILITIES

The general responsibilities of various parties in the commissioning process are provided in this Article. The specific responsibilities are in the technical specification sections.

The Contractor shall provide all equipment, materials, and labor to inspect, check-out, start-up and test equipment and systems, except for specified testing with portable data-loggers, which shall be supplied and installed by the CxA, as required.

1.8.1 Government's Commissioning Authority (CxA)

Coordinates and directs the commissioning activities in a logical, sequential and efficient manner using consistent protocols and forms, centralized documentation, clear and regular communications and consultations with all necessary parties, frequently updated timelines and schedules and technical expertise.

References herein to the "CxA" shall be inferred to mean "CxA or his designated representative".

1.8.1.1 Construction Phase

a. Coordinate the commissioning work and with Commissioning Team members, help integrate commissioning activities into the master schedule.

b. Revise the Construction Phase Commissioning Plan as necessary.

c. Plan and conduct commissioning scoping meetings and other commissioning meetings.

d. Request and review additional information required to perform commissioning tasks, including O&M materials, manufacturer's supplemental instructions, and contractor startup and checkout procedures.

e. Write and distribute construction checklists and functional test procedures. Prepare and maintain completed construction checklist log. Obtain the completed construction checklists from the Contractor and verify and approve by selected site observation and spot checking of a random number of typical installations.

f. Before startup, gather and review the current control sequences and interlocks and work with Contractor and DOR until sufficient clarity has been obtained, in writing, to be able to write the detailed, functional testing procedures.

g. Review and approve normal Contractor submittals applicable to systems being commissioned for compliance with commissioning needs, concurrent with the DOR reviews.

h. Develop an enhanced startup and initial systems checkout plan with Contractor.

i. Perform site visits as necessary to observe component and system installations. Attend selected planning and job-site meetings to ensure that commissioning activities are included in job progress meetings and to obtain information on construction progress. Review

construction meeting minutes for revisions/substitutions relating to the commissioning process. Assist in resolving any discrepancies.

j. Verify the execution of commissioning process activities using random sampling. Verification will include, but is not limited to, equipment submittals, construction checklists, pre-functional checklists, start-up reports, training, operating and maintenance data, functional performance tests, and test reports to verify compliance with the OPR. When a random sample does not meet the requirement, report the failure in the "Issues Log."

k. Review TAB execution plan for HVAC.

l. Oversee sufficient testing of the control system and approve it to be used for TAB, before TAB is executed.

m. Recommend approval of air and water systems balancing by spot testing, by reviewing completed reports and by selected site observation.

n. Coordinate the development of a systems manual.

1.8.1.2 Acceptance Phase

a. Witness HVAC piping flushing and test procedures, to ensure that proper procedures were followed. Document this testing and include the documentation in O&M manuals. Notify PM/CM of any deficiencies in results or procedures.

b. Witness ductwork cleaning and testing procedures, to ensure that proper procedures were followed. Document this testing and include the documentation in O&M manuals. Notify PM/CM of any deficiencies in results or procedures.

c. Recommend approval of systems startup by reviewing startup reports and by selected site observation.

d. With assistance as needed from installing contractors, witness the functional performance verification testing (PVT) of equipment and systems, performed by the Contractor and sub-contractors, including energy management control system trending, stand-alone data logger monitoring or manual performance testing, as required. Coordinate, witness, verify and document retesting as necessary until satisfactory performance is achieved. Coordinate and supervise required 2nd season testing and corrections to deficiencies.

e. Analyze any PVT trend logs and monitoring data to verify performance.

f. Maintain a master Issues Log and a separate testing record. Provide the PM/CM with written progress reports and test results with recommended actions.

g. Review and approve the training materials prepared by the Contractor for the Government's operating and maintenance personnel.

h. Review and evaluate the Operation and Maintenance (O&M) manuals submitted by the Contractor for completeness.

i. Provide a final commissioning report.

j. When necessary to solve a specific issue, prepare a standard trend logging package of primary parameters that will allow troubleshooting of improper system operations and solution recommendation.

1.8.1.3 Warranty Phase

a. Coordinate and supervise required seasonal or deferred testing and deficiency corrections.

b. Return to the site at 10 months into the 12 month warranty period and review with facility staff the current building operation and the condition of outstanding issues related to the original and seasonal commissioning. Interview facility staff and identify problems or concerns they have operating the building as originally intended. Make suggestions for improvements and for recording these changes in the O&M manuals. Identify areas that may come under warranty or under the original construction contract. Assist facility staff in developing reports, documents and requests for services to remedy outstanding problems.

c. Attend lessons learned sessions as required.

1.8.2 Government Project Manager (PM/CM)

1.8.2.1 Construction Phase

a. Attend the commissioning scoping meetings and selected commissioning team meetings.

b. Perform normal review of contract submittals, construction observation, as-built drawing preparation, O&M manual preparation, etc., as required.

c. Provide any design narrative documentation requested by the CxA.

d. Coordinate resolution of system design and construction deficiencies identified during commissioning, according to the contract documents.

e. Facilitate the coordination of the commissioning work by the CxA and the DOR, and with the assistance of the Contractor, ensure that commissioning activities are being scheduled into the master schedule.

f. Review and approve the final commissioning plan.

g. Furnish a copy of all construction documents, addenda, change orders, and shop drawing submittals related to commissioned equipment to the CxA.

h. Review and approve the functional performance test procedures submitted by the CxA, prior to testing.

1.8.2.2 Acceptance Phase

a. Prepare and submit final as-built design intent documentation for inclusion in the O&M manuals. Review and approve the O&M manuals.

b. When necessary, observe and witness startup and performance verification testing (PVT) of selected equipment.

c. Review commissioning progress and deficiency reports.

d. Coordinate the resolution of non-compliance and design deficiencies identified in all phases of commissioning.

e. Provide the Government's OPR documentation to the CxA for information and use.

f. Provide the BoD documents, prepared by DOR and approved by Government, to the CxA for use in developing the commissioning plan and systems manual.

g. Review and approve the Contractor's Training Plan for operations and maintenance personnel.

h. Coordinate and arrange for facility operation and maintenance personnel to attend various field commissioning activities, including field and classroom training sessions.

i. Provide final approval for the completion of the commissioning work.

1.8.2.3 Warranty Phase

a. Assist the CxA as necessary in the seasonal or deferred testing and deficiency corrections required by the specifications.

b. Attend lessons learned session.

1.8.3 Designer of Record (DOR)

1.8.3.1 Construction Phase

a. Perform normal submittal review, construction observation, as-built drawing preparation, etc., as required. Onsite observation should be completed just prior to system startup.

b. Provide design narratives and automatic controls sequences of operations documentation requested by the CxA. Assist (along with the Contractor) in clarifying the operation and control of commissioned equipment in areas where the specifications, control drawings or equipment documentation is not sufficient for writing detailed testing procedures.

c. Attend commissioning scoping meetings and other selected commissioning team meetings.

d. Participate in the resolution of system deficiencies identified during commissioning, according to the contract documents.

e. Prepare and submit the final as-built design intent and operating parameters documentation for inclusion in the O&M manuals. Review and approve the O&M manuals.

f. From the Contractor's red-line drawings, edit and update one-line diagrams developed as part of the design narrative documentation and those provided by the vendor as shop drawings for the domestic water; HVAC systems; supply, return and exhaust air systems and emergency power system.

g. Review and approve the CxA's construction checklist templates for major

pieces of equipment for sufficiency prior to their use.

h. Review and approve the CxA's functional performance test procedure forms for major pieces of equipment for sufficiency prior to their use.

1.8.3.2 Acceptance Phase

a. Provide a presentation at one of the training sessions for the Government's personnel.

b. Witness testing of selected pieces of equipment and systems.

1.8.3.3 Warranty Phase

a. During the warranty period, participate in the resolution of non-compliance, non-conformance and design deficiencies identified during commissioning.

b. Attend lessons learned sessions, as required.

1.8.4 Contractor

Contractor shall assign representatives with expertise and authority to act on their behalf and shall schedule them to participate in and perform commissioning process activities including, but not limited to, the following:

Provide sufficient notice to the Government's CxA in order to schedule commissioning activities. All parties will address scheduling problems and make necessary notifications in a timely manner in order to expedite the commissioning process.

1.8.4.1 Construction Phase

a. Facilitate the coordination of the commissioning and incorporate commissioning activities (the Commissioning Plan) into the Overall Project Schedule.

b. Submit detailed startup procedures for equipment and systems for approval.

c. Ensure that all commissioning responsibilities are executed according to the contract documents and the commissioning plan.

d. Provide copies of all submittals as required in Section 01 33 29 SUSTAINABLE REPORTING, including all changes thereto.

e. Attend and participate in commissioning team meetings.

f. No later than 60 days prior to startup of the first piece of major equipment, meet with the commissioning team to finalize the detailed commissioning procedures and schedule.

g. Review and accept the construction checklists, pre-functional checklists, and functional performance test procedures provided by the CxA.

h. Complete paper copies of construction checklists and pre-functional checklists as work is completed. Provide these completed checklists to

the CxA, with copies to the Government and the DOR, on a weekly basis or as otherwise required.

i. Provide all requested submittal data, including detailed startup procedures and specific responsibilities of the Government to keep warranties in force.

j. Analyze specified products and verify that the Government and DOR have specified the newest, most current equipment reasonable for this project's scope and budget.

k. Provide requested information to the CxA regarding equipment sequence of operations and testing procedures.

l. Review construction checklists and test procedures for equipment installed by factory representatives.

1.8.4.2 Acceptance Phase

a. Provide the training of Government personnel.

b. Accomplish the commissioning functional performance test procedures. Provide for retesting as required until the equipment and system have been adjusted for provide satisfactory test results.

c. Evaluate performance deficiencies identified in test reports and, in collaboration with entity responsible for system and equipment installation, recommend corrective action.

d. Cooperate with the CxA for resolution of issues recorded in the "Commissioning Issues Log".

e. Prepare O&M manuals, according to the contract documents, including clarifying and updating the original sequences of operation to as-built/as-tested conditions.

1.8.4.3 Warranty Phase

a. Provide assistance for seasonal or deferred performance testing, observed and documented by the CxA, according to the specifications.

b. Correct deficiencies and make necessary adjustments to O&M manuals and as-built drawings for applicable issues identified in any seasonal testing.

c. Perform all guarantee work for materials furnished under the contract for the time specified in the contract, including all warranties and curing all latent defects within the time period provided in the contract.

PART 2 PRODUCTS

2.1 TEST EQUIPMENT

All standard testing equipment required to perform startup and initial checkout and required performance testing shall be provided by the Contractor for the equipment being tested. This includes, but is not limited to, two-way radios, meters, and data recorders. Data recorders may be provided by the CxA at the option of the Government.

Special equipment, tools, and instruments required for testing equipment according to these contract documents shall be included in the contractor's base bid price and shall be turned over to the Government at Project close-out.

All testing equipment shall be of sufficient quality and accuracy to test and/or measure system performance within the tolerances specified in the specifications. If not otherwise noted, the following minimum requirements apply: Temperature sensors and digital thermometers shall have a certified calibration to NIST traceable standards within the past year to an accuracy of 0.5 degree F and a resolution of + or - 0.1 degree F. Pressure sensors shall have an accuracy of + or - 2.0 percent of the value range being measured (not full range of meter) and have been calibrated within the last year. All equipment shall be calibrated according to the manufacturer's recommended intervals and when dropped or damaged. Calibration tags shall be affixed or certificates readily available.

PART 3 EXECUTION

3.1 START-UP, PRE-FUNCTIONAL CHECKLISTS AND INITIAL CHECKOUT

The following procedures apply to all equipment/systems to be commissioned.

General: Pre-functional checklists are intended to verify that the equipment and systems are fully connected and operational and to ensure that functional performance testing (in-depth system checkout) may proceed without unnecessary delays. The pre-functional checklists for a given system must be successfully completed and approved prior to startup and formal performance testing of equipment or subsystems of the given system.

Startup and Checkout Plan: The CxA will assist the project commissioning team members responsible for startup of any equipment. The primary role of the CxA in this process is to ensure that there is written documentation that each of the manufacturer-recommended procedures has been completed. The CxA shall provide pre-functional checklists and startup shall be identified in the commissioning scoping meeting and on the checklist forms.

a. The pre-functional checklists shall be provided at the initial commissioning meetings. These checklists indicate required procedures to be executed as part of startup and initial checkout of the systems and the party responsible for their execution.

b. Contractor shall determine the trade or trades responsible for executing and documenting each of the line item tasks and shall transmit the checklists to the responsible party.

c. Contractor shall develop the full startup plan by combining the manufacturer's detailed startup and checkout procedures and the pre-functional checklists.

d. Contractor shall submit the full startup plan to the CxA and the Government for review and approval.

e. The CxA will review and approve the procedures and the documentation format for reporting, and will return the procedures and the documentation format to the Contractor.

f. Contractor will implement the full startup plan.

3.1.1 Sensor and Actuator Calibration

All field-installed temperature, relative humidity, CO, CO2, refrigerant, O2, pressure sensors and gages, and all actuators (dampers and valves) on all equipment shall be calibrated. Verify that the installed locations of these devices are appropriate and away from any external causes, which might contribute to erratic operation. Submit to the CxA the calibration methods and results. All test instruments shall have had a certified calibration within the last six months to NIST traceable standards, and comply with all local, state and federal requirements and certifications, as required. Sensors installed in the equipment/unit at the factory with calibration certification provided need not be field calibrated. Provide bench testing as required at the direction of the CxA.

a. Sensor Calibration Methods:

1. All Sensors: Verify that all sensor locations are appropriate and away from causes of erratic operation. Verify that sensors with shielded cable are grounded only at one end. For sensor pairs that are used to determine a temperature or pressure difference, make sure they are reading within 0.2°F of each other for temperature and within a tolerance equal to 2 percent of the reading, of each other, for pressure. Tolerances for critical applications may be tighter.

2. Sensors without Transmitters: Make a reading with a calibrated test instrument within 6 inches of the site sensor. Verify that the sensor reading (via the permanent thermostat, gage or building automation system (BAS)) is within the tolerances in the table below of the instrument-measured value. If not, install offset in BAS, calibrate or replace sensor.

3. Sensors with Transmitters: Disconnect sensor. Connect a signal generator in place of sensor. Connect ammeter in series between transmitter and BAS control panel. Using manufacturer's resistance-temperature data, simulate minimum desired temperature. Adjust transmitter potentiometer zero until 4 mA is read by the ammeter. Repeat for the maximum temperature matching 20 mA to the potentiometer span or maximum and verify at the BAS. Record all values and recalibrate controller as necessary to conform with specified control ramps, reset schedules, proportional relationship, reset relationship and P/I reaction. Reconnect sensor. Make a reading with a calibrated test instrument within 6 inches of the site sensor. Verify that the sensor reading (via the permanent thermostat, gage or building automation system (BAS)) is within the tolerances in the table below of the instrument-measured value. If not, replace sensor and repeat. For pressure sensors, perform a similar process with a suitable signal generator.

4. Critical Applications-- For critical applications (process, manufacturing, etc.) more rigorous calibration techniques may be required for selected sensors. Describe any such methods used on an attached sheet.

b. Tolerances, Standard Applications:

1. Cooling coil, chilled and condenser water temps +/- 0.4 F

2.	AHU wet bulb or dew point	+/- 2.0 F
3.	Hot water coil and boiler water temp	+/- 1.5 F
4.	Outside air, space air, duct air temps	+/- 0.4 F
5.	Watt-hour, voltage & amperage	+/- 1% of design
6.	Pressures, air, water & gas	+/- 3% of design
7.	Flow rates, air	+/- 10% of design
8.	Flow rates, water	+/- 4% of design
9.	Relative humidity	+/- 4% of design
10.	Combustion flue temps	+/- 5.0 F
11.	Oxygen or CO2 monitor	+/- 0.1% pts
12.	CO monitor	+/- 0.01% pts
13.	Natural gas and oil flow rate	+/- 1% of design
14.	Steam flow rate	+/- 3% of design
15.	Barometric pressure	+/- 0.1 inch Hg

c. Valve and Damper Stroke Setup and Check EMS Readout: For all valve and damper actuator positions checked, verify the actual position against the BAS readout.

1. Set pumps or fans to normal operating mode. Command valve or damper closed, visually verify that valve or damper is closed and adjust output zero signal as required. Command valve or damper open, verify position is full open and adjust output signal as required. Command valve or damper to a few intermediate positions. If actual valve or damper position doesn't reasonably correspond, replace actuator.

2. Closure for heating coil valves (NO): Set heating setpoint 20°F above room temperature. Observe valve open. Remove control power from the valve and verify that the valve stem and actuator position do not change. Restore to normal. Set heating setpoint to 20°F below room temperature. Observe the valve close.

3. Closure for cooling coil valves (NC): Set cooling setpoint 20°F above room temperature. Observe the valve close. Remove control air or power from the valve and verify that the valve stem and actuator position do not change. Restore to normal. Set cooling setpoint to 20°F below room temperature. Observe valve open. For pneumatics, by override in the EMS, increase pressure to valve by 3 psi (do not exceed actuator pressure rating) and verify valve stem and actuator position does not change. Restore to normal.

3.1.2 Execution of Pre-Functional Checklists and Startup

a. Four weeks prior to the scheduled startup, Contractor shall coordinate

startup and checkout with the Commissioning Team. The execution of the pre-functional checklists, startup, and checkout shall be directed and performed by the Contractor. Signatures are required for verification of completion of the work. Submit for approval by the Government and CxA.

b. Government and DOR, as necessary, shall at minimum observe the procedures for each piece of primary equipment. CxA will observe the functional performance testing of sufficient numbers of equipment or systems based on the project's sampling strategy for commissioning.

c. For lower-level components of equipment, (e.g., sensors, controllers) the CxA shall observe a sampling of the startup procedures.

d. Only individuals of the Contractor (technicians, engineers, tradesmen, vendors, etc.) who have direct knowledge and witnessed that a line item task on the construction checklist was actually performed shall check off that item. It is not acceptable for witnessing supervisors to fill out these forms.

3.1.3 Deficiencies, Non-Conformance, and Approval in Checklists and Startup

a. Contractor shall clearly list on an attached sheet any outstanding items of the initial startup and construction checklist procedures that were not completed successfully. The form and any outstanding deficiencies shall be provided to the CxA within two days of test completion.

b. The CxA will review the report and issue either a non-compliance report or an approval form to the Contractor. The Contractor shall correct all areas that are deficient or incomplete in the checklists and tests in a timely manner, shall notify members of the Commissioning Team as soon as outstanding items have been corrected, and resubmit an updated startup report with a Statement of Correction on the original non-compliance report. When satisfactorily completed, the CxA will recommend approval of the execution of the checklists and startup of each system.

c. Items left incomplete, which later cause deficiencies or delays during performance may result in back charges to the Contractor.

3.2 PHASED COMMISSIONING

The project requires startup, TAB and performance testing to be executed in phases. Phasing shall be coordinated with the Commissioning Team and be reflected in the overall project schedule and commissioning schedule by the contractor. Final performance testing of all systems will be as required by the phasing plan. The performance testing of the "systems as a whole" will be performed before final turnover of the entire project.

3.3 FUNCTIONAL PERFORMANCE TESTING

Requirements: The functional performance testing shall demonstrate that each system is operating according to the documented design intent and contract documents. Functional performance testing facilitates bringing the systems from a state of individual substantial completion to full dynamic operation. Additionally, during the testing process, areas of deficient performance shall be identified and corrected, improving the operation and functioning of the systems.

Test Equipment: Refer to Part 2 of this Section.

Problem Solving: The burden of responsibility to solve, correct, and retest malfunctions/failures is with the Contractor, with approval of the CxA and the Government as required.

3.3.1 Coordination and Scheduling

Contractor shall provide sufficient notice regarding the completion schedule for the installation of equipment "ready for inspection" dates, to allow for the completion of the pre-functional checklists and startup of all equipment and systems, and to allow the functional performance testing to be scheduled. The Commissioning Team shall oversee, witness, and document the performance of all equipment and systems. The CxA, in association with the Contractor and facility staff as needed shall execute the tests. Functional performance testing shall be conducted after the pre-functional checklists and startup has been satisfactorily completed. The control system shall be sufficiently tested and approved by the CxA before it is used to verify performance of other components or systems. The air balancing and water balancing shall be completed before performance testing of air or water-related equipment or systems. Testing proceeds from components to sub-systems to systems. When the proper performance of all interacting individual systems has been achieved, the interface or coordinated responses between systems shall be checked.

3.3.2 Development of Functional Test Procedures

Before the functional test procedures are finalized, the Contractor shall provide to the CxA all requested documentation and a current list of changes affecting equipment or systems, including an updated points list, program code, control sequences, and testing parameters. Using the testing parameters and requirements in the technical specifications, the CxA and the DOR shall update/develop specific test procedures and forms to verify and document proper operation of each piece of equipment and system. Contractor shall provide assistance to the CxA in developing the final functional test procedures. Prior to finalization, the CxA and the Government shall review and concur with the functional test procedures.

Test Methods:

a. Performance testing and verification may be achieved by manual testing or by monitoring the performance and analyzing the results using the control system's trend log capabilities or by stand-alone data loggers. The CxA may substitute specified methods or require an additional method to be executed other than what was specified, with the approval of the DOR and the Government. The CxA will determine which method is most appropriate for tests that do not have a specified method.

b. Simulated Conditions: Shall be allowed, though timing the testing to experience actual conditions is encouraged wherever practical.

c. Overridden Values: Overriding sensor values to simulate a condition, such as overriding the outside air temperature reading in a control system to be something other than it really is, is acceptable.

d. Simulated Signals: Using a signal generator which creates a simulated signal to test and calibrate transducers and DDC constants is generally

recommended over using the sensor to act as the signal generator via simulated conditions or overridden values.

e. Altering Setpoints: Rather than overriding sensor values, and when simulating conditions is difficult, altering setpoints to test a sequence is acceptable.

f. Indirect Indicators: Relying on indirect indicators for responses or performance shall be allowed only after visually and directly verifying and documenting, over the range of the test parameters, that the indirect readings through the control system represent actual conditions and responses.

g. Setup: Each performance test shall be performed under conditions that simulate actual conditions as closely as is practically possible. The Contractor shall assist the CxA in executing the test by providing all necessary materials, system modifications, etc., to produce the necessary flows, pressures and temperatures necessary to execute the test according to the specified conditions. At completion of the test, the Contractor shall return all affected equipment and systems to their approved operating settings.

3.4 DOCUMENTATION, NON-CONFORMANCE, AND APPROVAL OF TESTS

3.4.1 Documentation

The CxA shall witness and verify/pre-approve the documentation of the results of all performance tests. The CxA shall complete all documentation for performance testing.

3.4.2 Non-Conformance

Corrections of minor deficiencies identified may be made during the tests at the discretion of the CxA. In such cases the deficiency and resolution will be documented on the procedure form or on an attached sheet.

As tests progress and a deficiency is identified, the CxA shall discuss the issue with the Contractor, DOR and the Government.

a. When there is no dispute on the deficiency and the Contractor accepts responsibility to correct it:

1. The CxA will document the deficiency and the Contractor's response and intentions. After the day's work, the CxA will submit the non-compliance reports to the Government and the Contractor. The Contractor shall correct the deficiency, sign the statement of correction certifying that the equipment is ready to be retested, and submit it to the CxA.

2. Contractor shall reschedule and repeat the test.

b. If there is a dispute about a deficiency:

1. The dispute shall be documented on the non-compliance form with the Contractor's response.

2. Resolutions are made at the lowest management level possible. Other parties are brought into the discussions as needed. Final interpretive authority is with the Government. Final acceptance

authority is with the Government's Contracting Officer (CO).

3. The CxA shall document the resolution process.

4. Once the interpretation and resolution have been decided, the Contractor shall correct the deficiency, sign the statement of correction on the non-compliance form and submit it to the CxA. The Contractor shall reschedule and repeat the test until satisfactory performance is achieved.

All costs associated with retesting a performance test is the Contractor's responsibility.

The Contractor shall submit in writing to the CxA and the Government, at least as often as commissioning meetings are being scheduled, the status of each outstanding discrepancy identified during commissioning. Discussion shall cover explanations of any disagreement and proposals for their resolutions.

a. The CxA shall retain the original non-conformance forms until the end of the project.

b. Retesting shall not be considered a justified reason for a claim of delay or for a time extension by the Contractor.

3.4.3 Failure Due to Manufacturer Defect

If 10 percent (or three, whichever is greater) of identical pieces of equipment fail to perform to the contract documents (mechanically or substantively) due to a manufacturing defect, not allowing it to meet its submitted performance specification, all identical units may be considered unacceptable by the Government. In such case, the Contractor shall provide the Government with the following:

a. Within one week of notification from the Government, the Contractor and the manufacturer's representative shall examine all other identical units making a record of the findings.

b. Within two weeks of the original notification, the Contractor or manufacturer shall provide a signed and dated, written explanation of the problem, cause of failures, etc., and all proposed solutions to the Government and the CxA. The proposed solutions shall not significantly exceed the specification requirements of the original installation.

c. The Government shall determine whether repair or replacement of all identical units is acceptable.

d. Up to two examples of the proposed solution shall be installed by the Contractor and the Government shall test the installations for up to one week, upon which the Government shall decide whether to accept the solution.

e. Upon acceptance, the Contractor and/or the manufacturer shall replace or repair all identical items, at no expense to the Government. The replacement/repair work shall proceed with reasonable speed beginning within one week from when parts can be obtained.

3.4.4 Approval

The CxA shall note each satisfactorily demonstrated function on the test form. Final approval of the functional performance test by the Government shall be made after review by the CxA and the Government.

3.5 DEFERRED TESTING

3.5.1 Unforeseen Deferred Tests

If any check or test cannot be completed due to the project completion level, required occupancy condition or other deficiency, execution of pre-functional checklists and functional performance testing may be delayed upon approval of the CxA and the Government. These tests will be conducted in the same manner as the seasonal tests as soon as possible. Services of necessary parties will be negotiated.

3.5.2 Seasonal Testing

During the warranty period, seasonal testing (tests delayed until weather conditions are closer to the system's design) shall be completed as part of this contract. The CxA shall coordinate this activity through the Government. Tests will be executed and documented by the CxA, and deficiencies shall be corrected by the Contractor with the CxA witnessing the testing. Any final adjustments to the O&M manuals and as-built documents due to the testing shall be made by the Contractor.

3.6 TRAINING OF GOVERNMENT PERSONNEL

Contractor shall provide training coordination and shall ensure that training is completed. All training shall be coordinated through the CxA.

a. The Contractor shall provide the CxA with a training plan sixty days before the planned training date covering the following elements:

    1. Equipment

    2. Intended audience

    3. Location of training

    4. Objectives

    5. Subjects covered (description, duration of discussion, special methods, etc.)

    6. Duration of training on each subject

    7. Instructor for each subject

    8. Methods (classroom lecture, manufacturer's quality video, site walk-through, actual operational demonstrations, written handouts, etc.).

b. Provide designated Government personnel with comprehensive orientation and training in the understanding of the systems and the operation and maintenance of each piece of equipment that makes up the system.

c. Training shall normally start with classroom sessions followed by

hands-on demonstration/training on each piece of equipment.

d. During any demonstration, should the system fail to perform in accordance with the requirements of the O&M manual or sequence of operations, the system shall be repaired or adjusted as necessary and the demonstration repeated at another scheduled time, if necessary.

e. The appropriate trade or manufacturer's representative shall provide the instructions on each major piece of equipment. Practical building operating expertise as well as in-depth knowledge of all modes of operation of the specific piece of equipment is required. More than one party may be required to execute the training.

f. The controls contractor shall attend sessions other than the controls training, as specified, to discuss the interaction of the controls system as it relates to the equipment being discussed.

g. The training sessions shall follow the outline in the table of contents of the operation and maintenance manual and illustrate whenever possible the use of the O&M manuals for reference.

h. Training shall include:

1. Use of the printed installation, operation and maintenance instruction material included in the O&M manuals.

2. A review of the written O&M instructions emphasizing safe and proper operating requirements, preventative maintenance, special tools needed and spare parts inventory suggestions. The training shall include startup, operation in all modes possible, shutdown, seasonal changeover and any emergency procedures.

3. Discussion of relevant health and safety issues and concerns.

4. Discussion of warranties and guarantees.

5. Common troubleshooting problems and solutions.

6. Explanatory information included in the O&M manuals.

7. Discussion of any peculiarities of equipment installation or operation.

8. Classroom sessions shall include the use of overhead projections, slides, video/audio-taped material as might be appropriate.

9. Hands-on training shall include startup, operation in all modes possible, including manual, shut-down, alarms, power failure and any emergency procedures, and preventative maintenance for all pieces of equipment.

i. Contractor shall fully explain and demonstrate the operation, function and overrides of any local packaged controls not controlled by the central control system.

Contractor shall support all training efforts.

At the discretion of the CxA, training may occur before performance testing is complete if required by the facility operators, to assist the CxA in the

performance testing.

Videotaping of the training sessions will be provided by the Contractor and added to the O&M manuals. In addition, factory training videos identifying key troubleshooting, repair, service and/or replacement techniques shall be provided and reviewed with the Government.

3.7 SYSTEMS (COMMISSIONING) MANUALS

Develop a systems manual that provides future operating staff the information needed to understand and optimally operate the commissioned systems in this facility. Similar to an 'owner's manual', the systems manual shall be compiled for the purpose of informing the building staff, including 'future' staff and current or future service contractors, as well as occupants and users as to the basis for operating and maintaining the building's mechanical-electrical-plumbing systems. The systems manual is intended to be useful in the day-to-day operations of a facility, and also shall form the basis of transferring important building information from one party to the next.

In addition to the Design Intent/Owner's Project Requirements (OPR), the Basis of Design (BOD), the project drawings and specifications, the commissioning process requires detailed Operations & Maintenance (O&M) documentation as identified in Section 01 78 23 OPERATION AND MAINTENANCE DATA, Section 01 78 24.00 20 FACILITY ELECTRONIC OPERATION AND MAINTENANCE SUPPORT INFORMATION (eOMSI), and in the technical specifications. The CxA shall review the O&M documentation provided by the Contractor for the equipment and systems for this project. From this documentation the CxA shall develop and compile a Systems (Commissioning) Manual. The Systems Manual should focus on operating, rather than maintaining the equipment, and on the interactions between equipment. The Systems Manual should include the following information for each commissioned system:

a. Executive Summary: Provide an introduction to the Systems Manual, including a history and a general description of the facility, as well as current facility operational requirements.

    1. Facility Description: Location, directions & history.

    2. Site Plan, Buildings & Floors included in the scope.

    3. Current Facility Requirements & Objectives.

    4. Functional Uses/Operational Capabilities.

    5. Space requirements.

    6. Special Requirements.

b. Provide Site Contact Information:

    1. Facilities personnel.

    2. Occupants/Users.

    3. Contractors / Outside Resources.

    4. Architects, Engineers & Consultants.

5. Previous Retrofit Projects information.

c. Design Intent:

1. Owner's Project Requirements (OPR).

2. Architect/Engineer's Basis of Design (BOD).

d. Basic O&M Instructions, Requirements & Procedures:

1. Expectations.

2. General Operating Instructions/Procedures.

3. System single line diagrams.

4. As-built sequences of operations, control drawings and original set points.

5. Operating instructions for integrated building systems.

6. Recommended schedule of maintenance requirements and frequency: Provide a schedule for preventive maintenance (PM) in both printed and electronic format. Provide frequency for each PM task including:

a) Cleaning: Provide instructions and schedules for all routine cleaning and inspection of equipment.

b) Inspection: If periodic inspection of equipment is required for operation, indicate the items to be inspected and provide the inspection criteria for motors, controls, filters and other items.

c) Repairs: Provide instructions for minor repairs or adjustments required for PM routines.

d) Corrective Maintenance: Provide corrective maintenance instructions based on a logical effect-to-cause trouble-shooting philosophy.

e) Troubleshooting: Provide a troubleshooting guide for each major item of equipment. Guide should include columns for 'malfunction', 'probable cause', and 'recommended action'.

f) Repair & Replacement: Indicate repair and replacement procedures most likely to be required in the maintenance of equipment.

7. Project O&M manuals.

8. Recommended schedule for retesting of commissioned systems with blank test forms from the original Commissioning Plan.

9. Recommend schedule for re-calibrating sensors and actuators

10. Operator Training: CxA shall review project training requirements for Government's operations personnel and the Contractor's training plan; and shall verify that the training meets the Owner's requirements, as stated in the contract documents.

11. Safety Precautions: Provide a listing of safety precautions and instructions to be followed before, during and after making repairs, adjustments or routine maintenance.

12. Manufacturer's Data: Manufacturer's brochures and other descriptive literature covering devices and equipment used in the system. Provide illustrations with exploded views and renewal parts lists.

    a) Indicate any special tools required to service or maintain the equipment.

    b) Performance data, ratings and curves.

    c) Warrantees and Guarantees: Review the conditions to be maintained to keep warranty in effect.

    d) Any service contracts issued or required.

13. Supplemental Data: Provide written narrative or text and any special drawings required to provide necessary information, where manufacturer's standard printed data is not available and information is necessary for a proper understanding, operation and maintenance of the equipment or systems.

e. Major Systems Commissioned: Provide an equipment list, description, and summary of the following major systems. Discuss maintenance requirements, control sequences of operations, trend log points, as-built drawings, etc. Provide model number, serial number and nameplate data for each piece of equipment, and sub-components. Provide installation & start-up instructions for each piece of equipment. Provide all normal and emergency starting and shutdown procedures and data.

1. Chilled Water System.

2. Hot Water System.

3. Outdoor Condensing Units.

4. Building Air Distribution Systems.

5. Plumbing Systems.

6. Electrical Systems: Lighting Controls.

7. Building DDC Controls.

8. Occupancy Requirements; AHU & A/C Unit Operating Schedules.

9. Indoor Environmental Requirements: Temperature & Humidity, Lighting, IAQ.

10. Energy/Utility Costs: Savings goals, Level of Control Desired.

11. Documentation & Training Needs.

12. Performance Acceptance Criteria.

13. DDC Controls for Basic Troubleshooting; Trending & Logging.

14. Recommended 'Best Practice' Maintenance Requirements for Critical Equipment & Systems.

f. Executed Commissioning Test Procedures:

1. Provide a copy of the final, executed commissioning testing & acceptance procedures used for this project.

2. Provide a copy of the final, executed pre-functional (construction) checklists used for this project.

g. Re-Commissioning Test Procedures:

1. Step-by-step procedure for system startup, including a pre-start checklist.

2. Sequence of operations with detailed instruction in proper sequence for each mode of operations, i.e. 'occupied', 'unoccupied', or 'custodial'.

3. Emergency Operation: Provide instructions for manual operation of equipment while some functions are disabled. Provide instructions for operating under these conditions.

4. Shutdown Procedure: Include instructions for stopping and securing the equipment after operation.

h. Operations & Maintenance Submittals: Provide a record copy of all appropriate shop drawing submittals for major items of mechanical, electrical or plumbing equipment, including the equipment manufacturer's O&M manuals.

1. The CxA shall be responsible for compiling, organizing and indexing the following commissioning record data by equipment into labeled, indexed and tabbed binders and deliver to the Contractor to be included in the O&M manuals.

2. Commissioning Plan.

3. System reports including design narratives and criteria including sequences of operations, start-up plan and report, approvals, corrections, construction checklists, completed performance tests, and recommended re-commissioning schedule.

4. Final Commissioning Report: Executive summary, list of participants with roles and responsibilities, overview of commissioning and testing scope, description of testing and verification methods. For each piece of equipment, the report should contain the disposition of the CxA regarding the adequacy of the equipment, as well as the documentation and training meeting the contract requirements.

5. Non-Compliance Items: All outstanding and non-compliance items shall be specifically listed. Recommendations for improvement to equipment or operations, future actions, commissioning process changes, etc. shall also be listed. Each non-compliance issue

shall be referenced to the specific performance test, inspection, trend log, etc. where the deficiency is documented. The performance and efficiency section for each piece of equipment shall include a brief description of the verification method used (manual testing, BAS trend logs, data loggers, etc.) and include observations and conclusions from the testing.

-- End of Section --

THIS PAGE HAS BEEN INTENTIONALLY LEFT BLANK

SECTION 03 30 00

CAST-IN-PLACE CONCRETE
05/14

PART 1 GENERAL

1.1 REFERENCES

The publications listed below form a part of this specification to the extent referenced. The publications are referred to within the text by the basic designation only.

AMERICAN CONCRETE INSTITUTE INTERNATIONAL (ACI)

ACI 117	(2010; Errata 2011) Specifications for Tolerances for Concrete Construction and Materials and Commentary
ACI 121R	(2008) Guide for Concrete Construction Quality Systems in Conformance with ISO 9001
ACI 211.1	(1991; R 2009) Standard Practice for Selecting Proportions for Normal, Heavyweight and Mass Concrete
ACI 301	(2010; Errata 2011) Specifications for Structural Concrete
ACI 302.1R	(2004; Errata 2006; Errata 2007) Guide for Concrete Floor and Slab Construction
ACI 304.2R	(1996; R 2008) Placing Concrete by Pumping Methods
ACI 304R	(2000; R 2009) Guide for Measuring, Mixing, Transporting, and Placing Concrete
ACI 305R	(2010) Guide to Hot Weather Concreting
ACI 306.1	(1990; R 2002) Standard Specification for Cold Weather Concreting
ACI 306R	(2010) Guide to Cold Weather Concreting
ACI 308.1	(2011) Specification for Curing Concrete
ACI 318	(2011; Errata 1 2011; Errata 2 2012; Errata 3-4 2013) Building Code Requirements for Structural Concrete and Commentary
ACI 347	(2004; Errata 2008; Errata 2012) Guide to Formwork for Concrete
ACI SP-15	(2011) Field Reference Manual: Standard Specifications for Structural Concrete ACI

	301-05 with Selected ACI References
ACI SP-2	(2007; Abstract: 10th Edition) ACI Manual of Concrete Inspection
ACI SP-66	(2004) ACI Detailing Manual

AMERICAN HARDBOARD ASSOCIATION (AHA)

AHA A135.4	(1995; R 2004) Basic Hardboard

AMERICAN WELDING SOCIETY (AWS)

AWS D1.4/D1.4M	(2011) Structural Welding Code - Reinforcing Steel

ASTM INTERNATIONAL (ASTM)

ASTM A1064/A1064M	(2013) Standard Specification for Carbon-Steel Wire and Welded Wire Reinforcement, Plain and Deformed, for Concrete
ASTM A53/A53M	(2012) Standard Specification for Pipe, Steel, Black and Hot-Dipped, Zinc-Coated, Welded and Seamless
ASTM A615/A615M	(2014) Standard Specification for Deformed and Plain Carbon-Steel Bars for Concrete Reinforcement
ASTM A706/A706M	(2014) Standard Specification for Low-Alloy Steel Deformed and Plain Bars for Concrete Reinforcement
ASTM A767/A767M	(2009) Standard Specification for Zinc-Coated (Galvanized) Steel Bars for Concrete Reinforcement
ASTM A934/A934M	(2013) Standard Specification for Epoxy-Coated Prefabricated Steel Reinforcing Bars
ASTM A996/A996M	(2009b) Standard Specification for Rail-Steel and Axle-Steel Deformed Bars for Concrete Reinforcement
ASTM C1017/C1017M	(2007) Standard Specification for Chemical Admixtures for Use in Producing Flowing Concrete
ASTM C1077	(2014) Standard Practice for Laboratories Testing Concrete and Concrete Aggregates for Use in Construction and Criteria for Laboratory Evaluation
ASTM C1107/C1107M	(2013) Standard Specification for Packaged Dry, Hydraulic-Cement Grout (Nonshrink)

ASTM C1157/C1157M	(2011) Standard Specification for Hydraulic Cement
ASTM C1260	(2007) Standard Test Method for Potential Alkali Reactivity of Aggregates (Mortar-Bar Method)
ASTM C138/C138M	(2013a) Standard Test Method for Density ("Unit Weight"), Yield, and Air Content (Gravimetric) of Concrete
ASTM C143/C143M	(2012) Standard Test Method for Slump of Hydraulic-Cement Concrete
ASTM C150/C150M	(2012) Standard Specification for Portland Cement
ASTM C1602/C1602M	(2012) Standard Specification for Mixing Water Used in Production of Hydraulic Cement Concrete
ASTM C172/C172M	(2010) Standard Practice for Sampling Freshly Mixed Concrete
ASTM C173/C173M	(2012) Standard Test Method for Air Content of Freshly Mixed Concrete by the Volumetric Method
ASTM C192/C192M	(2015) Standard Practice for Making and Curing Concrete Test Specimens in the Laboratory
ASTM C231/C231M	(2010) Standard Test Method for Air Content of Freshly Mixed Concrete by the Pressure Method
ASTM C260/C260M	(2010a) Standard Specification for Air-Entraining Admixtures for Concrete
ASTM C31/C31M	(2012) Standard Practice for Making and Curing Concrete Test Specimens in the Field
ASTM C311/C311M	(2013) Sampling and Testing Fly Ash or Natural Pozzolans for Use as a Mineral Admixture in Portland-Cement Concrete
ASTM C39/C39M	(2015a) Standard Test Method for Compressive Strength of Cylindrical Concrete Specimens
ASTM C42/C42M	(2013) Standard Test Method for Obtaining and Testing Drilled Cores and Sawed Beams of Concrete
ASTM C494/C494M	(2013) Standard Specification for Chemical Admixtures for Concrete
ASTM C552	(2013) Standard Specification for Cellular Glass Thermal Insulation

ASTM C567/C567M	(2011) Determining Density of Structural Lightweight Concrete
ASTM C578	(2015b) Standard Specification for Rigid, Cellular Polystyrene Thermal Insulation
ASTM C591	(2013) Standard Specification for Unfaced Preformed Rigid Cellular Polyisocyanurate Thermal Insulation
ASTM C595/C595M	(2013) Standard Specification for Blended Hydraulic Cements
ASTM C618	(2012a) Standard Specification for Coal Fly Ash and Raw or Calcined Natural Pozzolan for Use in Concrete
ASTM C78/C78M	(2012; E 2013) Standard Test Method for Flexural Strength of Concrete (Using Simple Beam with Third-Point Loading)
ASTM C920	(2014a) Standard Specification for Elastomeric Joint Sealants
ASTM C94/C94M	(2014b) Standard Specification for Ready-Mixed Concrete
ASTM C989/C989M	(2013) Standard Specification for Slag Cement for Use in Concrete and Mortars
ASTM D1751	(2004; E 2013; R 2013) Standard Specification for Preformed Expansion Joint Filler for Concrete Paving and Structural Construction (Nonextruding and Resilient Bituminous Types)
ASTM D1752	(2004a; R 2013) Standard Specification for Preformed Sponge Rubber Cork and Recycled PVC Expansion
ASTM D2628	(1991; R 2011) Standard Specification for Preformed Polychloroprene Elastomeric Joint Seals for Concrete Pavements
ASTM D2835	(1989; R 2012) Lubricant for Installation of Preformed Compression Seals in Concrete Pavements
ASTM D412	(2006a; R 2013) Standard Test Methods for Vulcanized Rubber and Thermoplastic Elastomers - Tension
ASTM D471	(2015a) Standard Test Method for Rubber Property - Effect of Liquids
ASTM D5759	(2012) Characterization of Coal Fly Ash and Clean Coal Combustion Fly Ash for Potential Uses

ASTM D6690	(2012) Standard Specification for Joint and Crack Sealants, Hot Applied, for Concrete and Asphalt Pavements
ASTM E1155	(1996; R 2008) Standard Test Method for Determining Floor Flatness and Floor Levelness Numbers
ASTM E1643	(2011) Standard Practice for Selection, Design, Installation, and Inspection of Water Vapor Retarders Used in Contact with Earth or Granular Fill Under Concrete Slabs
ASTM E1745	(2011) Standard Specification for Water Vapor Retarders Used in Contact with Soil or Granular Fill under Concrete Slabs
ASTM E329	(2013b) Standard Specification for Agencies Engaged in the Testing and/or Inspection of Materials Used in Construction
ASTM E96/E96M	(2014) Standard Test Methods for Water Vapor Transmission of Materials

CONCRETE REINFORCING STEEL INSTITUTE (CRSI)

CRSI 10MSP	(2009; 28th Ed) Manual of Standard Practice

NATIONAL INSTITUTE OF STANDARDS AND TECHNOLOGY (NIST)

NIST PS 1	(2009) DOC Voluntary Product Standard PS 1-07, Structural Plywood

U.S. ARMY CORPS OF ENGINEERS (USACE)

COE CRD-C 513	(1974) Corps of Engineers Specifications for Rubber Waterstops
COE CRD-C 572	(1974) Corps of Engineers Specifications for Polyvinylchloride Waterstops

U.S. GREEN BUILDING COUNCIL (USGBC)

LEED NC	(2009) Leadership in Energy and Environmental Design(tm) New Construction Rating System

1.2 DEFINITIONS

a. "Cementitious material" as used herein must include all portland cement, pozzolan, fly ash, and ground granulated blast-furnace slag.

b. "Exposed to public view" means situated so that it can be seen from eye level from a public location after completion of the building. A public location is accessible to persons not responsible for operation or maintenance of the building.

c. "Chemical admixtures" are materials in the form of powder or fluids that are added to the concrete to give it certain characteristics not obtainable with plain concrete mixes.

d. "Complementary cementing materials" (CCM) include coal fly ash, granulated blast-furnace slag, natural or calcined pozzolans, and ultra-fine coal ash when used in such proportions to replace the portland cement that result in improvement to sustainability and durability and reduced cost.

e. "Design strength" (f'c) is the specified compressive strength of concrete at time(s) specified in this section to meet structural design criteria.

f. "Mass Concrete" is any concrete system that approaches a maximum temperature of 158 degrees F within the first 72 hours of placement. In addition, it includes all concrete elements with a section thickness of 3 feet or more regardless of temperature.

g. "Mixture proportioning" is the process of designing concrete mixture proportions to enable it to meet the strength, service life and constructability requirements of the project while minimizing the initial and life-cycle cost.

h. "Mixture proportions" are the masses or volumes of individual ingredients used to make a unit measure (cubic meter or cubic yard) of concrete.

i. "Pozzolan" is a siliceous or siliceous and aluminous material, which in itself possesses little or no cementitious value but will, in finely divided form and in the presence of moisture, chemically react with calcium hydroxide at ordinary temperatures to form compounds possessing cementitious properties.

j. "Workability (or consistence)" is the ability of a fresh (plastic) concrete mix to fill the form/mould properly with the desired work (vibration) and without reducing the concrete's quality. Workability depends on water content, chemical admixtures, aggregate (shape and size distribution), cementitious content and age (level of hydration).

1.3 SUBMITTALS

Government approval is required for submittals with a "G" designation; submittals not having a "G" designation are for Contractor Quality Control approval. Submit the following in accordance with Section 01 33 00 SUBMITTAL PROCEDURES:

SD-01 Preconstruction Submittals

Concrete Curing Plan
Quality Control Plan; G
Quality Control Personnel Certifications; G
Quality Control Organizational Chart
Laboratory Accreditation; G

SD-02 Shop Drawings

Reinforcing steel; G

SD-03 Product Data

Joint sealants; (LEED NC)

Joint filler; (LEED NC)
Materials for Forms
Cementitious Materials; (LEED NC)
Vapor retarder
Concrete Curing Materials
Reinforcement; (LEED NC)
Liquid Chemical Floor Hardener
Admixtures
Mechanical Reinforcing Bar Connectors
Waterstops

Local/Regional Materials; (LEED NC)

Biodegradable Form Release Agent

SD-05 Design Data

Concrete mix design; G

SD-06 Test Reports

Concrete mix design; G

Fly ash

Pozzolan

Ground granulated blast-furnace slag

Tolerance report

Compressive strength tests; G

Unit weight of structural concrete

Air Content

Slump Tests

Water

SD-07 Certificates

Reinforcing Bars

Welder Qualifications

VOC Content for form release agents, curing compounds, and concrete penetrating sealers

Material Safety Data Sheets

Field Testing Technician and Testing Agency

SD-08 Manufacturer's Instructions

Liquid Chemical Floor Hardener

Curing Compound

1.4 MODIFICATION OF REFERENCES

Accomplish work in accordance with ACI publications except as modified herein. Consider the advisory or recommended provisions to be mandatory. Interpret reference to the "Building Official," the "Structural Engineer," and the "Architect/Engineer" to mean the Contracting Officer.

1.5 DELIVERY, STORAGE, AND HANDLING

Follow ACI 301, ACI 304R and ASTM A934/A934M requirements and recommendations. Do not deliver concrete until vapor retarder, forms, reinforcement, embedded items, and chamfer strips are in place and ready for concrete placement. Do not store concrete curing compounds or sealers with materials that have a high capacity to adsorb volatile organic compound (VOC) emissions. Do not store concrete curing compounds or sealers in occupied spaces.

1.5.1 Reinforcement

Store reinforcement of different sizes and shapes in separate piles or racks raised above the ground to avoid excessive rusting. Protect from contaminants such as grease, oil, and dirt. Ensure bar sizes can be accurately identified after bundles are broken and tags removed.

1.6 QUALITY ASSURANCE

1.6.1 Design Data

1.6.1.1 Concrete Mix Design

Sixty days minimum prior to concrete placement, submit a mix design for each strength and type of concrete. Submit a complete list of materials including type; brand; source and amount of cement, complementary cementitious materials, , and admixtures; and applicable reference specifications. Submit mill test and all other test for cement, complementary cementitious materials, aggregates, and admixtures. Provide documentation of maximum nominal aggregate size, gradation analysis, percentage retained and passing sieve, and a graph of percentage retained verses sieve size. Provide mix proportion data using at least three different water-cementitious material ratios for each type of mixture, which produce a range of strength encompassing those required for each type of concrete required. If source material changes, resubmit mix proportion data using revised source material. Provide only materials that have been proven by trial mix studies to meet the requirements of this specification, unless otherwise approved in writing by the Contracting Officer. Indicate clearly in the submittal where each mix design is used when more than one mix design is submitted. Resubmit data on concrete components if the qualities or source of components changes. For previously approved concrete mix designs used within the past twelve months, the previous mix design may be re-submitted without further trial batch testing if accompanied by material test data conducted within the last six months. Obtain mix design approval from the contracting officer prior to concrete placement.

1.6.2 Shop Drawings

1.6.2.1 Reinforcing Steel

ACI SP-66. Indicate bending diagrams, assembly diagrams, splicing and laps of bars, shapes, dimensions, and details of bar reinforcing, accessories, and concrete cover. Do not scale dimensions from structural drawings to determine lengths of reinforcing bars. Reproductions of contract drawings are unacceptable.

1.6.3 Control Submittals

1.6.3.1 Concrete Curing Plan

Submit proposed materials, methods and duration for curing concrete elements in accordance with ACI 308.1.

1.6.3.2 VOC Content for form release agents, curing compounds, and concrete penetrating sealers

Submit certification for the form release agent, curing compounds, and concrete penetrating sealers that indicate the VOC content of each product.

1.6.3.3 Material Safety Data Sheets

Submit Material Safety Data Sheets (MSDS) for all materials that are regulated for hazardous health effects. MSDS must be readily accessible during each work shift to employees when they are at the construction site.

1.6.4 Test Reports

1.6.4.1 Fly Ash and Pozzolan

Submit test results in accordance with ASTM C618 for fly ash and pozzolan. Submit test results performed within 6 months of submittal date.

1.6.4.2 Ground Granulated Blast-Furnace Slag

Submit test results in accordance with ASTM C989/C989M for ground granulated blast-furnace slag. Submit test results performed within 6 months of submittal date.

1.6.5 Field Samples

1.6.6 Quality Control Plan

Develop and submit for approval a concrete quality control program in accordance with the guidelines of ACI 121R and as specified herein. The plan must include approved laboratories. Provide direct oversight for the concrete qualification program inclusive of associated sampling and testing. All quality control reports must be provided to the Contracting Officer, Quality Manager and Concrete Supplier. Maintain a copy of ACI SP-15 and CRSI 10MSP at project site.

1.6.7 Quality Control Personnel Certifications

The Contractor must submit for approval the responsibilities of the various quality control personnel, including the names and qualifications of the individuals in those positions and a quality control organizational chart

defining the quality control hierarchy and the responsibility of the various positions. Quality control personnel must be employed by the Contractor.

Submit American Concrete Institute certification for the following:

a. CQC personnel responsible for inspection of concrete operations.

b. Lead Foreman or Journeyman of the Concrete Placing, Finishing, and Curing Crews.

c. Field Testing Technicians: ACI Concrete Field Testing Technician, Grade I.

1.6.7.1 Quality Manager Qualifications

The quality manager must hold a current license as a professional engineer in a U.S. state or territory with experience on at least five (5) similar projects. Evidence of extraordinary proven experience may be considered by the Contracting Officer as sufficient to act as the Quality Manager.

1.6.7.2 Field Testing Technician and Testing Agency

Submit data on qualifications of proposed testing agency and technicians for approval by the Contracting Officer prior to performing testing on concrete.

a. Work on concrete under this contract must be performed by an ACI Concrete Field Testing Technician Grade 1 qualified in accordance with ACI SP-2 or equivalent. Equivalent certification programs must include requirements for written and performance examinations as stipulated in ACI SP-2.

b. Testing agencies that perform testing services on reinforcing steel must meet the requirements of ASTM E329.

c. Testing agencies that perform testing services on concrete materials must meet the requirements of ASTM C1077.

1.6.8 Laboratory Qualifications for Concrete Qualification Testing

The concrete testing laboratory must have the necessary equipment and experience to accomplish required testing. The laboratory must meet the requirements of ASTM C1077 and be Cement and Concrete Reference Laboratory (CCRL) inspected.

1.6.9 Laboratory Accreditation

Laboratory and testing facilities must be provided by and at the expense of the Contractor. The laboratories performing the tests must be accredited in accordance with ASTM C1077, including ASTM C78/C78M and ASTM C1260. The accreditation must be current and must include the required test methods, as specified. Furthermore, the testing must comply with the following requirements:

a. Aggregate Testing and Mix Proportioning: Aggregate testing and mixture proportioning studies must be performed by an accredited laboratory and under the direction of a registered professional engineer in a U.S. state or territory competent in concrete materials who is competent in

concrete materials and must sign all reports and designs.

b. Acceptance Testing: Furnish all materials, labor, and facilities required for molding, curing, testing, and protecting test specimens at the site and in the laboratory. Furnish and maintain boxes or other facilities suitable for storing and curing the specimens at the site while in the mold within the temperature range stipulated by ASTM C31/C31M.

c. Contractor Quality Control: All sampling and testing must be performed by an approved, onsite, independent, accredited laboratory.

1.7 ENVIRONMENTAL REQUIREMENTS

Provide space ventilation according to manufacturer recommendations, at a minimum, during and following installation of concrete curing compound and sealer. Maintain one of the following ventilation conditions during the curing period or for 72 hours after installation:

a. Supply 100 percent outside air 24 hours a day.

b. Supply airflow at a rate of 6 air changes per hour, when outside temperatures are between 55 degrees F and 84 degrees F and humidity is between 30 percent and 60 percent.

c. Supply airflow at a rate of 1.5 air changes per hour, when outside air conditions are not within the range stipulated above.

1.7.1 Submittals for Environmental Performance

a. Provide data indication the percentage of post-industrial pozzolan (fly ash, blast furnace slag) cement substitution as a percentage of the full product composite by weight.

b. Provide data indicating the percentage of post-industrial and post-consumer recycled content aggregate.

c. Provide product data indicating the percentage of post-consumer recycled steel content in each type of steel reinforcement as a percentage of the full product composite by weight.

d. Provide product data stating the location where all products were manufactured

e. For projects using FSC certified formwork, provide chain-of-custody documentation for all certified wood products.

f. For projects using reusable formwork, provide data showing how formwork is reused.

g. Provide MSDS product information data showing that form release agents meet any environmental performance goals such as using vegetable and soy based products.

h. Provide MSDS product information data showing that concrete adhesives meet any environmental performance goals including low emitting, low volatile organic compound products.

1.8 SUSTAINABLE DESIGN REQUIREMENTS

1.8.1 Local/Regional Materials

Use materials or products extracted, harvested, or recovered, as well as manufactured, within a 500 mile radius from the project site, if available from a minimum of three sources. Submit documentation indicating distance between manufacturing facility and the project site. Indicate distance of raw material origin from the project site. Indicate relative dollar value of local/regional materials to total dollar value of products included in project.

1.9 QUALIFICATIONS FOR WELDING WORK

Welding procedures must be in accordance with AWS D1.4/D1.4M.

Verify that Welder qualifications are in accordance with AWS D1.4/D1.4M or under an equivalent qualification test approved in advance. Welders are permitted to do only the type of welding for which each is specifically qualified.

PART 2 PRODUCTS

2.1 MATERIALS FOR FORMS

Provide wood, plywood, plastic, carton, or steel. Use plywood or steel forms where a smooth form finish is required.

2.1.1 Wood Forms

Use lumber as specified in Section 06 10 00 ROUGH CARPENTRY and as follows. Provide lumber that is square edged or tongue-and-groove boards, free of raised grain, knotholes, or other surface defects. Provide plywood that complies with NIST PS 1, B-B concrete form panels or better or AHA A135.4, hardboard for smooth form lining. Submit data verifying that composite wood products contain no urea formaldehyde resins. Virgin wood used must be FSC-certified.

2.1.1.1 Concrete Form Plywood (Standard Rough)

Provide plywood that conforms to NIST PS 1, B-B, concrete form, not less than 5/8-inch thick.

2.1.1.2 Overlaid Concrete Form Plywood (Standard Smooth)

Provide plywood that conforms to NIST PS 1, B-B, high density form overlay, not less than 5/8-inch thick.

2.1.2 Plastic Forms

Plastic lumber as specified in Section 06 10 00 ROUGH CARPENTRY. Provide plastic forms that contain a minimum of 50 percent post-consumer recycled content, or a minimum of 50 percent post-industrial recycled content.

2.1.3 Carton Forms

Moisture resistant treated paper faces, biodegradable, structurally sufficient to support weight of wet concrete until initial set.

2.1.4 Steel Forms

Provide steel form surfaces that do not contain irregularities, dents, or sags.

2.2 FORM TIES AND ACCESSORIES

Provide a form tie system that does not leave mild steel after break-off or removal any closer than 2 inches from the exposed surface. Do not use wire alone. Form ties and accessories must not reduce the effective cover of the reinforcement.

2.2.1 Waterstops

2.2.1.1 PVC Waterstop

Polyvinylchloride waterstops must conform to COE CRD-C 572.

2.2.1.2 Rubber Waterstop

Rubber waterstops must conform to COE CRD-C 513.

2.2.1.3 Thermoplastic Elastomeric Rubber Waterstop

Thermoplastic elastomeric rubber waterstops must conform to ASTM D471.

2.2.1.4 Hydrophilic Waterstop

Swellable strip type compound of polymer modified chloroprene rubber that swells upon contact with water must conform to ASTM D412 as follows: Tensile strength 420 psi minimum; ultimate elongation 600 percent minimum. Hardness must be 50 minimum on the type A durometer and the volumetric expansion ratio in distilled water at 70 degrees F must be 3 to 1 minimum.

2.2.2 Dovetail Anchor Slot

Preformed metal slot approximately 1 inch by 1 inch of not less than 22 gage galvanized steel cast in concrete. Coordinate actual size and throat opening with dovetail anchors and provide with removable filler material.

2.2.3 Perimeter Insulation

Perimeter insulation must be polystyrene conforming to ASTM C578, Type II; polyurethane conforming to ASTM C591, Type II; or cellular glass conforming to ASTM C552, Type I or IV. Comply with EPA requirements in accordance with Section 01 33 29 SUSTAINABILITY REPORTING.

2.3 CONCRETE MIX DESIGN

2.3.1 Contractor-Furnished Mix Design

ACI 211.1, ACI 301, and ACI 318 and ACI 304.2R except as otherwise specified. Indicate the compressive strength (f'c) of the concrete for each portion of the structure(s) as specified below. Where faster set time is required, use Type III cement before using calcium chloride with approval from the contracting officer.

2.3.1.1 Footings

Proportion normal-weight concrete mixture as follows:

a. Minimum Compressive Strength: 3000 psi at 28 days.

b. Maximum Water-Cementitious Materials Ratio: 0.50 .

c. Slump Limit: 4 inches or 8 inches for concrete with verified slump of 2 to 4 inches before adding high-range water-reducing admixture or plasticizing admixture, plus or minus 1 inch.

e. Air Content: 3 percent, plus or minus 1.5 percent at point of delivery for 3/4-inch nominal maximum aggregate size.

2.3.1.2 Foundation Walls

Proportion normal-weight concrete mixture as follows:

a. Minimum Compressive Strength: 3000 psi at 28 days.

b. Maximum Water-Cementitious Materials Ratio: 0.45 .

c. Slump Limit: 4 inches or 8 inches for concrete with verified slump of 2 to 4 inches before adding high-range water-reducing admixture or plasticizing admixture, plus or minus 1 inch.

e. Air Content: 5 percent, plus or minus 1.5 percent at point of delivery for 3/4 inch nominal maximum aggregate size.

2.3.1.3 Slab-on-Grade

Proportion normal-weight concrete mixture as follows:

a. Minimum Compressive Strength: 3500 psi at 28 days.

b. Maximum Water-Cementitious Materials Ratio: 0.45 .

c. Slump Limit: 4 inches or 8 inches for concrete with verified slump of 2 to 4 inches before adding high-range water-reducing admixture or plasticizing admixture, plus or minus 1 inch.

f. Air Content: Do not allow air content of trowel-finished floors to exceed 3 percent.

2.3.1.4 Concrete Toppings

Proportion normal-weight concrete mixture as follows:

a. Minimum Compressive Strength: 3000 psi at 28 days.

b. Maximum Water-Cementitious Materials Ratio: 0.50 .

c. Slump Limit: 4 inches or 8 inches for concrete with verified slump of 2 to 4 inches before adding high-range water-reducing admixture or plasticizing admixture, plus or minus 1 inch.

f. Air Content: Do not allow air content of trowel-finished floors to exceed 3 percent.

2.3.1.5 Mix Proportions for Normal Weight Concrete

Trial design batches, mixture proportioning studies, and testing requirements for various classes and types of concrete specified are the responsibility of the Contractor. Base mixture proportions on compressive strength as determined by test specimens fabricated in accordance with ASTM C192/C192M and tested in accordance with ASTM C39/C39M. Samples of all materials used in mixture proportioning studies must be representative of those proposed for use in the project and must be accompanied by the manufacturer's or producer's test report indicating compliance with these specifications. Base trial mixtures having proportions, consistencies, and air content suitable for the work on methodology described in ACI 211.1. In the trial mixture, use at least three different water-cementitious material ratios for each type of mixture, which must produce a range of strength encompassing those required for each class and type of concrete required on the project. The maximum water-cementitious material ratio allowed must be based on equivalent water-cementitious material ratio calculations as determined by the conversion from the weight ratio of water to cement plus pozzolan by weight equivalency method. Design laboratory trial mixture for maximum permitted slump and air content. Each combination of material proposed for use must have separate trial mixture, except for accelerator or retarder use can be provided without separate trial mixture. Report the temperature of concrete in each trial batch. For each water-cementitious material ratio, at least three test cylinders for each test age must be made and cured in accordance with ASTM C192/C192M and tested in accordance with ASTM C39/C39M for 7, 28, days. From these results, plot a curve showing the relationship between water-cementitious material ratio and strength for each set of trial mix studies. In addition, plot a curve showing the relationship between 7 and 28 day strengths.

2.3.1.6 Required Average Strength of Mix Design

The selected mixture must produce an average compressive strength exceeding the specified strength by the amount indicated in ACI 301, but may not exceed the specified strength at the same age by more than 20 percent. When a concrete production facility has a record of at least 15 consecutive tests, the standard deviation must be calculated and the required average compressive strength must be determined in accordance with ACI 301.

2.3.2 Ready-Mix Concrete

Provide concrete that meets the requirements of ASTM C94/C94M.

Ready-mixed concrete manufacturer must provide duplicate delivery tickets with each load of concrete delivered. Provide delivery tickets with the following information in addition to that required by ASTM C94/C94M:

Type and brand cement

Cement and complementary cementitious materials content in 94-pound bags per cubic yard of concrete

Maximum size of aggregate

Amount and brand name of admixtures

Total water content expressed by water cementitious material ratio

2.3.3 Concrete Curing Materials

Provide concrete curing material in accordance with ACI 301 Section 5 and ACI 308.1 Section 2. Submit product data for concrete curing compounds. Submit manufactures instructions for placement of curing compound.

2.4 MATERIALS

2.4.1 Cementitious Materials

For exposed concrete, use one manufacturer and one source for each type of cement, ground slag, fly ash, and pozzolan.

2.4.1.1 Fly Ash

ASTM C618, Class F, except that the maximum allowable loss on ignition must not exceed 6 percent. Class F fly ash for use in mitigating Alkali-Silica Reactivity must have a Calcium Oxide (CaO) content of less than 8 percent and a total equivalent alkali content less than 1.5 percent.

Add with cement. Fly ash content must be a minimum of 15 percent by weight of cementitious material, provided the fly ash does not reduce the amount of cement in the concrete mix below the minimum requirements of local building codes. Where the use of fly ash cannot meet the minimum level, provide the maximum amount of fly ash permittable that meets the code requirements for cement content. Report the chemical analysis of the fly ash in accordance with ASTM C311/C311M. Evaluate and classify fly ash in accordance with ASTM D5759.

2.4.1.2 Raw or Calcined Natural Pozzolan

Natural pozzolan must be raw or calcined and conform to ASTM C618, Class N, including the optional requirements for uniformity and effectiveness in controlling Alkali-Silica reaction and must have an ignition loss not exceeding 3 percent. Class N pozzolan for use in mitigating Alkali-Silica Reactivity must have a Calcium Oxide (CaO) content of less than 13 percent and total equivalent alkali content less than 3 percent.

2.4.1.3 Ultra Fine Fly Ash and Ultra Fine Pozzolan

Ultra Fine Fly Ash (UFFA) and Ultra Fine Pozzolan (UFP) must conform to ASTM C618, Class F or N, and the following additional requirements:

a. The strength activity index at 28 days of age must be at least 95 percent of the control specimens.

b. The average particle size must not exceed 6 microns.

c. The sum of SiO_2 + Al_2O_3 + Fe_2O_3 must be greater than 77 percent.

2.4.1.4 Ground Granulated Blast-Furnace Slag

ASTM C989/C989M, Grade 100 . Slag content must be a minimum of 25 percent by weight of cementitious material.

2.4.1.5 Portland Cement

Provide cement that conforms to ASTM C150/C150M, Type I or II, with

tri-calcium aluminates (C3A) content less than 10 percent and a maximum cement-alkali content of 0.80 percent Na2Oe (sodium oxide) equivalent.. Use one brand and type of cement for formed concrete having exposed-to-view finished surfaces.

2.4.1.6 Blended Cements

Blended cement must conform to ASTM C595/C595M and ASTM C1157/C1157M, Type IP or IS, including the optional requirement for mortar expansion and sulfate soundness and consist of a mixture of ASTM C150/C150M Type I, or Type II cement and a complementary cementing material. The slag added to the Type IS blend must be ASTM C989/C989M ground granulated blast-furnace slag. The pozzolan added to the Type IP blend must be ASTM C618 Class F and must be interground with the cement clinker. The manufacturer must state in writing that the amount of pozzolan in the finished cement will not vary more than plus or minus 5 mass percent of the finished cement from lot-to-lot or within a lot. The percentage and type of mineral admixture used in the blend must not change from that submitted for the aggregate evaluation and mixture proportioning.

2.4.2 Water

Water must comply with the requirements of ASTM C1602/C1602M. Minimize the amount of water in the mix. Improve workability by adjusting the grading rather than by adding water. Water must be potable; free from injurious amounts of oils, acids, alkalis, salts, organic materials, or other substances deleterious to concrete. Submit test report showing water complies with ASTM C1602/C1602M.

2.4.3 Nonshrink Grout

ASTM C1107/C1107M.

2.4.4 Admixtures

ASTM C494/C494M: Type A, water reducing; Type B, retarding; Type C, accelerating; Type D, water-reducing and retarding; and Type E, water-reducing and accelerating admixture. Do not use calcium chloride admixtures. Submit product data for admixtures used in concrete.

2.4.4.1 Air-Entraining

ASTM C260/C260M.

2.4.4.2 High Range Water Reducer (HRWR) (Superplasticizers)

ASTM C494/C494M, Type F and Type G (HRWR retarding admixture) and ASTM C1017/C1017M.

2.4.5 Vapor Retarder

ASTM E1745 Class C polyethylene sheeting, minimum 10 mil thickness or other equivalent material with a maximum permeance rating of 0.04 perms per ASTM E96/E96M.

Consider plastic vapor retarders and adhesives with a high recycled content, low toxicity low VOC (Volatile Organic Compounds) levels.

2.4.6 Expansion/Contraction Joint Filler

ASTM D1751 or ASTM D1752 Type I or II. Material must be 1/2 inch thick, unless otherwise indicated.

2.4.7 Joint Sealants

Submit manufacturer's product data, indicating VOC content.

2.4.7.1 Horizontal Surfaces, 3 Percent Slope, Maximum

ASTM D6690 or ASTM C920, Type M, Class 25, Use T.

2.4.7.2 Vertical Surfaces Greater Than 3 Percent Slope

ASTM C920, Type M, Grade NS, Class 25, Use T ..

2.4.7.3 Preformed Polychloroprene Elastomeric Type

ASTM D2628.

2.4.7.4 Lubricant for Preformed Compression Seals

ASTM D2835.

2.4.8 Biodegradable Form Release Agent

Provide form release agent that is colorless, biodegradable, and water-based, with a low (maximum of 55 grams/liter (g/l)) VOC content. A minimum of 85 percent of the total product must be biobased material. Provide product that does not bond with, stain, or adversely affect concrete surfaces and does not impair subsequent treatments of concrete surfaces. Provide form release agent that does not contain diesel fuel, petroleum-based lubricating oils, waxes, or kerosene. Submit documentation indicating type of biobased material in product and biobased content. Indicate relative dollar value of biobased content products to total dollar value of products included in project.

2.5 REINFORCEMENT

2.5.1 Reinforcing Bars

ACI 301 unless otherwise specified. Use deformed steel. ASTM A615/A615M with the bars marked A, Grade 60; or ASTM A996/A996M with the bars marked R, Grade 60, or marked A, Grade 60. Submit mill certificates for reinforcing bars.

2.5.1.1 Galvanized Reinforcing Bars

Provide galvanized reinforcing bars that conform to ASTM A767/A767M, Class II with galvanizing after fabrication.

2.5.1.2 Weldable Reinforcing Bars

Provide weldable reinforcing bars that conform to ASTM A706/A706M and ASTM A615/A615M and Supplement S1, Grade 60, except that the maximum carbon content must be 0.55 percent.

2.5.2 Mechanical Reinforcing Bar Connectors

ACI 301. Provide 125 percent minimum yield strength of the reinforcement bar.

2.5.3 Wire

2.5.3.1 Welded Wire Reinforcement

ASTM A1064/A1064M. Provide flat sheets of welded wire reinforcement for slabs and toppings.

2.5.3.2 Steel Wire

Wire must conform to ASTM A1064/A1064M.

2.5.4 Reinforcing Bar Supports

Supports include bolsters, chairs, spacers, and other devices necessary for proper spacing, supporting, and fastening reinforcing bars and welded wire reinforcement in place.

Provide wire bar type supports of coated or non-corrodible material conforming to ACI SP-66 and CRSI 10MSP.

Legs of supports in contact with formwork must be hot-dip galvanized, or plastic coated after fabrication, or stainless-steel bar supports.

2.5.5 Dowels for Load Transfer in Floors

Provide greased dowels for load transfer in floors of the type, design, weight, and dimensions indicated. Provide dowel bars that are plain-billet steel conforming to ASTM A615/A615M, Grade 40. Provide dowel pipe that is steel conforming to ASTM A53/A53M.

2.6 FLOOR FINISH MATERIALS

2.6.1 Liquid Chemical Floor Hardener

Hardener must be a colorless aqueous solution containing a blend of inorganic silicate or siliconate material and proprietary components combined with a wetting agent; that penetrates, hardens, and densifies concrete surfaces. Submit manufactures instructions for placement of liquid chemical floor hardener.

PART 3 EXECUTION

3.1 EXAMINATION

Do not begin installation until substrates have been properly constructed; verify that substrates are level.

If substrate preparation is the responsibility of another installer, notify Contracting Officer of unsatisfactory preparation before processing.

Check field dimensions before beginning installation. If dimensions vary too much from design dimensions for proper installation, notify Contracting Officer and wait for instructions before beginning installation.

3.2 PREPARATION

Determine quantity of concrete needed and minimize the production of excess concrete. Designate locations or uses for potential excess concrete before the concrete is poured.

3.2.1 General

Surfaces against which concrete is to be placed must be free of debris, loose material, standing water, snow, ice, and other deleterious substances before start of concrete placing.

Remove standing water without washing over freshly deposited concrete. Divert flow of water through side drains provided for such purpose.

3.2.2 Subgrade Under Foundations and Footings

When subgrade material is semiporous and dry, sprinkle subgrade surface with water as required to eliminate suction at the time concrete is deposited, or seal subgrade surface by covering surface with specified vapor retarder. When subgrade material is porous, seal subgrade surface by covering surface with specified vapor retarder.

3.2.3 Subgrade Under Slabs on Ground

Before construction of slabs on ground, have underground work on pipes and conduits completed and approved.

Previously constructed subgrade or fill must be cleaned of foreign materials.

Finish surface of capillary water barrier under interior slabs on ground must not show deviation in excess of 1/4 inch when tested with a 10-foot straightedge parallel with and at right angles to building lines.

Finished surface of subgrade or fill under exterior slabs on ground must not be more than 0.02-foot above or 0.10-foot below elevation indicated.

3.2.4 Edge Forms and Screed Strips for Slabs

Set edge forms or bulkheads and intermediate screed strips for slabs to obtain indicated elevations and contours in finished slab surface and must be strong enough to support vibrating bridge screeds or roller pipe screeds if nature of specified slab finish requires use of such equipment. Align concrete surface to elevation of screed strips by use of strike-off templates or approved compacting-type screeds.

3.2.5 Reinforcement and Other Embedded Items

Secure reinforcement, joint materials, and other embedded materials in position, inspected, and approved before start of concrete placing.

3.3 FORMS

Provide forms, shoring, and scaffolding for concrete placementin accordance with ACI 301 Section 2 and 5 and ACI 347. Set forms mortar-tight and true to line and grade. Chamfer above grade exposed joints, edges, and external corners of concrete 0.75 inch unless otherwise indicated. Provide formwork with clean-out openings to permit inspection and removal of debris.

3.3.1 Coating

Before concrete placement, coat the contact surfaces of forms with a form release agent.

3.3.2 Reshoring

Reshore concrete elements in accordance with ACI 301 Section 2.

3.3.3 Reuse

Reuse forms providing the structural integrity of concrete and the aesthetics of exposed concrete are not compromised. Wood forms must not be clogged with paste and must be capable of absorbing high water-cementitious material ratio paste.

3.3.4 Forms for Standard Rough Form Finish

Provide formwork in accordance with ACI 301 Section 5 with a surface finish, SF-1.0, for formed surfaces that are to be concealed by other construction.

3.3.5 Forms for Standard Smooth Form Finish

Provide formwork in accordance with ACI 301 Section 5 with a surface finish, SF-3.0, for formed surfaces that are exposed to view.

3.3.6 Form Ties

Provide ties in accordance with ACI 301 section 2.

3.3.7 Tolerances for Form Construction

Construct formwork to ensure that after removal of forms and prior to patching and finishing of formed surfaces, provide concrete surfaces in accordance with tolerances specified in ACI 301 Section 5 and ACI 117.

3.3.8 Removal of Forms and Supports

After placing concrete, removal of forms must be in accordance with ACI 301 Section 2 except as modified by approved form removal schedule.

3.4 WATERSTOP INSTALLATION AND SPLICES

Provide waterstops in construction joints as indicated.

Install waterstops to form a continuous diaphragm in each joint. Make adequate provisions to support and protect waterstops during progress of work. Protect waterstops protruding from joints from damage.

3.4.1 PVC Waterstop

Make splices by heat sealing the adjacent waterstop edges together using a thermoplastic splicing iron utilizing a non-stick surface specifically designed for waterstop welding. Reform waterstops at splices with a remolding iron with ribs or corrugations to match the pattern of the waterstop. The spliced area, when cooled, must show no signs of separation, holes, or other imperfections when bent by hand in as sharp an

angle as possible.

3.4.2 Rubber Waterstop

Rubber waterstops must be spliced using cold bond adhesive as recommended by the manufacturer.

3.4.3 Thermoplastic Elastomeric Rubber Waterstop

Fittings must be shop made using a machine specifically designed to mechanically weld the waterstop. A portable power saw must be used to miter or straight cut the ends to be joined to ensure good alignment and contact between joined surfaces. Maintain continuity of the characteristic features of the cross section of the waterstop (for example ribs, tabular center axis, and protrusions) across the splice.

3.4.4 Hydrophilic Waterstop

Miter cut ends to be joined with sharp knife or shears. The ends must be adhered with adhesive.

3.5 PLACING REINFORCEMENT AND MISCELLANEOUS MATERIALS

ACI 301 and ACI SP-66. Provide bars, welded wire reinforcement, wire ties, supports, and other devices necessary to install and secure reinforcement. Reinforcement must not have rust, scale, oil, grease, clay, or foreign substances that would reduce the bond. Rusting of reinforcement is a basis of rejection if the effective cross-sectional area or the nominal weight per unit length has been reduced. Remove loose rust prior to placing steel. Tack welding is prohibited.

3.5.1 General

Provide details of reinforcement that are in accordance with ACI 301 and ACI SP-66 and as specified.

3.5.2 Vapor Retarder

Install in accordance with ASTM E1643. Provide beneath the on-grade concrete floor slab. Use the greatest widths and lengths practicable to eliminate joints wherever possible. Lap joints a minimum of 12 inches and tape. Remove torn, punctured, or damaged vapor retarder material and provide with new vapor retarder prior to placing concrete. Concrete placement must not damage vapor retarder .

3.5.3 Perimeter Insulation

Install perimeter insulation at locations indicated. Adhesive must be used where insulation is applied to the interior surface of foundation walls and may be used for exterior application.

3.5.4 Reinforcement Supports

Support reinforcement in accordance with ACI 301 Section 3. Supports for coated or galvanized bars must also be coated with electrically compatible material for a distance of at least 2 inches beyond the point of contact with the bars.

3.5.5 Splicing

As indicated. For splices not indicated ACI 301. Do not splice at points of maximum stress. Overlap welded wire reinforcement the spacing of the cross wires, plus 2 inches.

3.5.6 Future Bonding

Plug exposed, threaded, mechanical reinforcement bar connectors with a greased bolt. Provide bolt threads that match the connector. Countersink the connector in the concrete. Caulk the depression after the bolt is installed.

3.5.7 Setting Miscellaneous Material

Place and secure anchors and bolts, pipe sleeves, conduits, and other such items in position before concrete placement and support against displacement. Plumb anchor bolts and check location and elevation. Temporarily fill voids in sleeves with readily removable material to prevent the entry of concrete.

3.5.8 Fabrication

Shop fabricate reinforcing bars to conform to shapes and dimensions indicated for reinforcement, and as follows:

Provide fabrication tolerances that are in accordance with ACI 318 and ACI SP-66.

Provide hooks and bends that are in accordance with ACI 318 and ACI SP-66.

Reinforcement must be bent cold to shapes as indicated. Bending must be done in the shop. Rebending of a reinforcing bar that has been bent incorrectly is not be permitted. Bending must be in accordance with standard approved practice and by approved machine methods.

Tolerance on nominally square-cut, reinforcing bar ends must be in accordance with ACI SP-66.

Deliver reinforcing bars bundled, tagged, and marked. Tags must be metal with bar size, length, mark, and other information pressed in by machine. Marks must correspond with those used on the placing drawings.

Do not use reinforcement that has any of the following defects:

a. Bar lengths, depths, and bends beyond specified fabrication tolerances

b. Bends or kinks not indicated on drawings or approved shop drawings

c. Bars with reduced cross-section due to rusting or other cause

Replace defective reinforcement with new reinforcement having required shape, form, and cross-section area.

3.5.9 Placing Reinforcement

Place reinforcement in accordance with ACI 301 and ACI SP-66.

For slabs on grade (over earth or over capillary water barrier) and for

footing reinforcement, support bars or welded wire reinforcement on precast concrete blocks, spaced at intervals required by size of reinforcement, to keep reinforcement the minimum height specified above the underside of slab or footing.

For slabs other than on grade, supports for which any portion is less than 1 inch from concrete surfaces that are exposed to view or to be painted must be of precast concrete units, plastic-coated steel, or stainless steel protected bar supports. Precast concrete units must be wedge shaped, not larger than 3-1/2 by 3-1/2 inches, and of thickness equal to that indicated for concrete protection of reinforcement. Provide precast units that have cast-in galvanized tie wire hooked for anchorage and blend with concrete surfaces after finishing is completed.

Provide reinforcement that is supported and secured together to prevent displacement by construction loads or by placing of wet concrete, and as follows:

Provide supports for reinforcing bars that are sufficient in number and have sufficient strength to carry the reinforcement they support, and in accordance with ACI 318, ACI SP-66 and CRSI 10MSP. Do not use supports to support runways for concrete conveying equipment and similar construction loads.

Equip supports on ground and similar surfaces with sand-plates.

Support welded wire reinforcement as required for reinforcing bars.

Secure reinforcements to supports by means of tie wire. Wire must be black, soft iron wire, not less than 16 gage.

Reinforcement must be accurately placed, securely tied at intersections, and held in position during placing of concrete by spacers, chairs, or other approved supports. Point wire-tie ends away from the form. Unless otherwise indicated, numbers, type, and spacing of supports must conform to ACI SP-66.

Bending of reinforcing bars partially embedded in concrete is permitted only as specified in ACI SP-66 and ACI 318.

3.5.10 Spacing of Reinforcing Bars

Spacing must be as indicated. If not indicated, spacing must be in accordance with the ACI 318 and ACI SP-66.

Reinforcing bars may be relocated to avoid interference with other reinforcement, or with conduit, pipe, or other embedded items. If any reinforcing bar is moved a distance exceeding one bar diameter or specified placing tolerance, resulting rearrangement of reinforcement is subject to preapproval by the Contracting Officer.

3.5.11 Concrete Protection for Reinforcement

Concrete protection must be in accordance with the ACI 318 and ACI SP-66.

3.5.12 Welding

Welding must be in accordance with AWS D1.4/D1.4M.

3.6 BATCHING, MEASURING, MIXING, AND TRANSPORTING CONCRETE

ASTM C94/C94M, ACI 301, ACI 302.1R and ACI 304R, except as modified herein. Batching equipment must be such that the concrete ingredients are consistently measured within the following tolerances: 1 percent for cement and water, 2 percent for aggregate, and 3 percent for admixtures. Furnish mandatory batch ticket information for each load of ready mix concrete.

3.6.1 Measuring

Make measurements at intervals as specified in paragraphs SAMPLING and TESTING.

3.6.2 Mixing

ASTM C94/C94M, ACI 301 and ACI 304R. Machine mix concrete. Begin mixing within 30 minutes after the cement has been added to the aggregates. Place concrete within 90 minutes of either addition of mixing water to cement and aggregates or addition of cement to aggregates if the air temperature is less than 84 degrees F. Reduce mixing time and place concrete within 60 minutes if the air temperature is greater than 84 degrees F except as follows: if set retarding admixture is used and slump requirements can be met, limit for placing concrete may remain at 90 minutes. Additional water may be added, provided that both the specified maximum slump and water-cementitious material ratio are not exceeded and the required concrete strength is still met. When additional water is added, an additional 30 revolutions of the mixer at mixing speed is required. If the entrained air content falls below the specified limit, add a sufficient quantity of admixture to bring the entrained air content within the specified limits. Dissolve admixtures in the mixing water and mix in the drum to uniformly distribute the admixture throughout the batch. Do not reconstitute concrete that has begun to solidify.

3.6.3 Transporting

Transport concrete from the mixer to the forms as rapidly as practicable. Prevent segregation or loss of ingredients. Clean transporting equipment thoroughly before each batch. Do not use aluminum pipe or chutes. Remove concrete which has segregated in transporting and dispose of as directed.

3.7 PLACING CONCRETE

Place concrete in accordance with ACI 301 Section 5.

3.7.1 Footing Placement

Concrete for footings may be placed in excavations without forms upon inspection and approval by the Contracting Officer. Excavation width must be a minimum of 4 inches greater than indicated.

3.7.2 Pumping

ACI 304R and ACI 304.2R. Pumping must not result in separation or loss of materials nor cause interruptions sufficient to permit loss of plasticity between successive increments. Loss of slump in pumping equipment must not exceed 2 inches at discharge/placement. Do not convey concrete through pipe made of aluminum or aluminum alloy. Avoid rapid changes in pipe sizes. Limit maximum size of course aggregate to 33 percent of the diameter of the pipe. Limit maximum size of well rounded aggregate to 40

percent of the pipe diameter. Take samples for testing at both the point of delivery to the pump and at the discharge end.3.7.3 Cold Weather

ACI 306.1. Do not allow concrete temperature to decrease below 50 degrees F. Obtain approval prior to placing concrete when the ambient temperature is below 40 degrees F or when concrete is likely to be subjected to freezing temperatures within 24 hours. Cover concrete and provide sufficient heat to maintain 50 degrees F minimum adjacent to both the formwork and the structure while curing. Limit the rate of cooling to 37 degrees F in any 1 hour and 50 degrees F per 24 hours after heat application.

3.7.4 Hot Weather

Maintain required concrete temperature using Figure 4.2 in ACI 305R to prevent the evaporation rate from exceeding 0.2 pound of water per square foot of exposed concrete per hour. Cool ingredients before mixing or use other suitable means to control concrete temperature and prevent rapid drying of newly placed concrete. Shade the fresh concrete as soon as possible after placing. Start curing when the surface of the fresh concrete is sufficiently hard to permit curing without damage. Provide water hoses, pipes, spraying equipment, and water hauling equipment, where job site is remote to water source, to maintain a moist concrete surface throughout the curing period. Provide burlap cover or other suitable, permeable material with fog spray or continuous wetting of the concrete when weather conditions prevent the use of either liquid membrane curing compound or impervious sheets. For vertical surfaces, protect forms from direct sunlight and add water to top of structure once concrete is set.

3.7.5 Bonding

Surfaces of set concrete at joints, must be roughened and cleaned of laitance, coatings, loose particles, and foreign matter. Roughen surfaces in a manner that exposes the aggregate uniformly and does not leave laitance, loosened particles of aggregate, nor damaged concrete at the surface.

Obtain bonding of fresh concrete that has set as follows:

At joints between footings and walls or columns, between walls or columns and the beams or slabs they support, and elsewhere unless otherwise specified; roughened and cleaned surface of set concrete must be dampened, but not saturated, immediately prior to placing of fresh concrete.

At joints in exposed-to-view work; at vertical joints in walls; at joints near midpoint of span in girders, beams, supported slabs, other structural members; in work designed to contain liquids; the roughened and cleaned surface of set concrete must be dampened but not saturated and covered with a cement grout coating.

Provide cement grout that consists of equal parts of portland cement and fine aggregate by weight with not more than 6 gallons of water per sack of cement. Apply cement grout with a stiff broom or brush to a minimum thickness of 1/16 inch. Deposit fresh concrete before cement grout has attained its initial set.

3.8 WASTE MANAGEMENT

Provide as specified in the Waste Management Plan and as follows.

3.8.1 Mixing Equipment

Before concrete pours, designate on-site area to be paved later in project for cleaning out concrete mixing trucks. Minimize water used to wash equipment.

3.8.2 Hardened, Cured Waste Concrete

Crush and reuse hardened, cured waste concrete as fill or as a base course for pavement. 3.8.3 Reinforcing Steel

Collect reinforcing steel and place in designated area for recycling.

3.8.4 Other Waste

Identify concrete manufacturer's or supplier's policy for collection or return of construction waste, unused material, deconstruction waste, and/or packaging material.

3.9 SURFACE FINISHES EXCEPT FLOOR, SLAB, AND PAVEMENT FINISHES

3.9.1 Defects

Repair surface defects in accordance with ACI 301 Section 5.

3.9.2 Not Against Forms (Top of Walls)

Surfaces not otherwise specified must be finished with wood floats to even surfaces. Finish must match adjacent finishes.

3.9.3 Formed Surfaces

3.9.3.1 Tolerances

ACI 117 and as indicated.

3.9.3.2 As-Cast Rough Form

Provide for surfaces not exposed to public view a surface finish SF-1.0. Patch holes and defects in accordance with ACI 301.

3.9.3.3 Standard Smooth Finish

Provide for surfaces exposed to public view a surface finish SF-3.0. Patch holes and defects in accordance with ACI 301.

3.10 FLOOR, SLAB, AND PAVEMENT FINISHES AND MISCELLANEOUS CONSTRUCTION

ACI 301 and ACI 302.1R, unless otherwise specified. Slope floors uniformly to drains where drains are provided. Steel trowel and fine-broom finish concrete slabs that are to receive quarry tile, ceramic tile, or paver tile. Where straightedge measurements are specified, Contractor must provide straightedge.

3.10.1 Finish

Place, consolidate, and immediately strike off concrete to obtain proper contour, grade, and elevation before bleedwater appears. Permit concrete

to attain a set sufficient for floating and supporting the weight of the finisher and equipment. If bleedwater is present prior to floating the surface, drag the excess water off or remove by absorption with porous materials. Do not use dry cement to absorb bleedwater.

3.10.1.1 Scratched

Use for surfaces intended to receive bonded applied cementitious applications. Finish concrete in accordance with ACI 301 Section 5 for a scratched finish.

3.10.1.2 Floated

Use for exterior slabs where not otherwise specified. Finish concrete in accordance with ACI 301 Section 5 for a floated finish.

3.10.1.3 Steel Troweled

Use for floors intended as walking surfaces, and for reception of floor coverings . Finish concrete in accordance with ACI 301 Section 5 for a steel troweled finish.

3.10.1.4 Nonslip Finish

Use on surfaces of exterior platforms, steps, and landings; and on exterior and interior pedestrian ramps. Finish concrete in accordance with ACI 301 Section 5 for a dry-shake finish. After the selected material has been embedded by the two floatings, complete the operation with a broomed finish.

3.10.1.5 Broomed

Use on surfaces of exterior walks, platforms, patios, and ramps, unless otherwise indicated. Finish concrete in accordance with ACI 301 Section 5 for a broomed finish.

3.10.1.6 Pavement

Screed the concrete with a template advanced with a combined longitudinal and crosswise motion. Maintain a slight surplus of concrete ahead of the template. After screeding, float the concrete longitudinally. Use a straightedge to check slope and flatness; correct and refloat as necessary. Obtain final finish by belting. Lay belt flat on the concrete surface and advance with a sawing motion; continue until a uniform but gritty nonslip surface is obtained. Round edges and joints with an edger having a radius of 1/8 inch.

3.10.1.7 Concrete Toppings Placement

The following requirements apply to the placement of toppings of concrete on base slabs that are either freshly placed and still plastic, or on hardened base slabs.

a. Placing on a Fresh Base: Screed and bull float the base slab. As soon as the water sheen has disappeared, lightly rake the surface of the base slab with a stiff bristle broom to produce a bonding surface for the topping. Immediately spread the topping mixture evenly over the roughened base before final set takes place. Give the topping the finish specified herein.

b. Bonding to a Hardened Base: When the topping is to be bonded to a floated or troweled hardened base, roughen the base by scarifying, grit-blasting, scabbling, planing, flame cleaning, or acid-etching to lightly expose aggregate and provide a bonding surface. Remove dirt, laitance, and loose aggregate by means of a stiff wire broom. Keep the clean base wet for a period of 12 hours preceding the application of the topping. Remove excess water and apply a 1:1:1/2 cement-sand-water grout, and brush into the surface of the base slab. Do not allow the cement grout to dry, and spread it only short distances ahead of the topping placement. Do not allow the temperature differential between the completed base and the topping mixture to exceed 41 degrees F at the time of placing. Place the topping and finish as specified herein.

3.10.2 Flat Floor Finishes

ACI 302.1R. Construct in accordance with one of the methods recommended in Table 7.15.3, "Typical Composite Ff/FL Values for Various Construction Methods." ACI 117 for tolerance tested by ASTM E1155.

a. Specified Conventional Value:

Floor Flatness (Ff) 30
Floor Levelness (FL) 30

3.10.2.1 Measurement of Floor Tolerances

Test slab within 24 hours of the final troweling. Provide tests to Contracting Officer within 12 hours after collecting the data. Floor flatness inspector is required to provide a tolerance report which must include:

a. Key plan showing location of data collected.

b. Results required by ASTM E1155.

3.10.2.2 Remedies for Out of Tolerance Work

Contractor is required to repair and retest any floors not meeting specified tolerances. Prior to repair, Contractor must submit and receive approval for the proposed repair, including product data from any materials proposed. Repairs must not result in damage to structural integrity of the floor. For floors exposed to public view, repairs must prevent any uneven or unusual coloring of the surface.

3.10.3 Concrete Walks

Provide 4 inches thick minimum. Provide contraction joints spaced every 5 linear feet unless otherwise indicated. Cut contraction joints one inch deep with a jointing tool after the surface has been finished. Provide 0.5 inch thick transverse expansion joints at changes in direction where sidewalk abuts curb, steps, rigid pavement, or other similar structures; space expansion joints every 50 feet maximum. Give walks a broomed finish. Unless indicated otherwise, provide a transverse slope of 1/48. Limit variation in cross section to 1/4 inch in 5 feet.

3.10.4 Pits and Trenches

Place bottoms and walls monolithically or provide waterstops and keys.

3.10.5 Curbs and Gutters

Provide contraction joints spaced every 10 feet maximum unless otherwise indicated. Cut contraction joints 3/4 inch deep with a jointing tool after the surface has been finished. Provide expansion joints 1/2 inch thick and spaced every 100 feet maximum unless otherwise indicated. Perform pavement finish.

3.10.6 Splash Blocks

Provide at outlets of downspouts emptying at grade. Splash blocks may be precast concrete, and must be 24 inches long, 12 inches wide and 4 inches thick, unless otherwise indicated, with smooth-finished countersunk dishes sloped to drain away from the building.

3.11 JOINTS

3.11.1 Construction Joints

Make and locate joints not indicated so as not to impair strength and appearance of the structure, as approved. Joints must be perpendicular to main reinforcement. Reinforcement must be continued and developed across construction joints. Locate construction joints as follows:

3.11.1.1 Maximum Allowable Construction Joint Spacing

a. In walls at not more than 60 feet in any horizontal direction.

b. In slabs on ground, so as to divide slab into areas not in excess of 1,200 square feet.

3.11.1.2 Construction Joints for Constructability Purposes

a. In walls, at top of footing; at top of slabs on ground; at top and bottom of door and window openings or where required to conform to architectural details; and at underside of deepest beam or girder framing into wall.

b. In columns or piers, at top of footing; at top of slabs on ground; and at underside of deepest beam or girder framing into column or pier.

c. Near midpoint of spans for supported slabs, beams, and girders unless a beam intersects a girder at the center, in which case construction joints in girder must offset a distance equal to twice the width of the beam. Make transfer of shear through construction joint by use of inclined reinforcement.

Provide keyways at least 1-1/2-inches deep in construction joints in walls and slabs and between walls and footings; approved bulkheads may be used for slabs.

3.11.2 Isolation Joints in Slabs on Ground

Provide joints at points of contact between slabs on ground and vertical surfaces, such as column pedestals, foundation walls, grade beams, and elsewhere as indicated.

Fill joints with premolded joint filler strips 1/2 inch thick, extending

full slab depth. Install filler strips at proper level below finish floor elevation with a slightly tapered, dress-and-oiled wood strip temporarily secured to top of filler strip to form a groove not less than 3/4 inch in depth where joint is sealed with sealing compound and not less than 1/4 inch in depth where joint sealing is not required. Remove wood strip after concrete has set. Contractor must clean groove of foreign matter and loose particles after surface has dried.

3.11.3 Contraction Joints in Slabs on Ground

Provide joints to form panels as indicated.

Under and on exact line of each control joint, cut 50 percent of welded wire reinforcement before placing concrete.

Sawcut contraction joints into slab on ground in accordance with ACI 301 Section 5.

Sawcutting will be limited to within 12 hours after set and at 1/4 slab depth.

3.11.4 Sealing Joints in Slabs on Ground

Contraction and control joints which are to receive finish flooring material must be sealed with joint sealing compound after concrete curing period. Slightly underfill groove with joint sealing compound to prevent extrusion of compound. Remove excess material as soon after sealing as possible.

Sealed groove must be left ready to receive filling material that is provided as part of finish floor covering work.

3.12 CONCRETE FLOOR TOPPING

3.12.1 Standard Floor Topping

Provide topping for treads and platforms of metal steel stairs and elsewhere as indicated.

Preparations Prior to Placing

When topping is placed on a green concrete base slab, screed surface of base slab to a level not more than 1-1/2 inches nor less than 1 inch below required finish surface. Remove water and laitance from surface of base slab before placing topping mixture. As soon as water ceases to rise to surface of base slab, place topping.

When topping is placed on a hardened concrete base slab, remove dirt, loose material, oil, grease, asphalt, paint, and other contaminants from base slab surface, leaving a clean surface. Prior to placing topping mixture, 2-1/2-inches minimum, slab surface must be dampened and left free of standing water. Immediately before topping mixture is placed, broom a coat of neat cement grout onto surface of slab. Do not allow cement grout to set or dry before topping is placed.

When topping is placed on a metal surface, such as metal pans for steel stairs, remove dirt, loose material, oil, grease, asphalt, paint, and other contaminants from metal surface.

Placing

Spread standard topping mixture evenly on previously prepared base slab or metal surface, brought to correct level with a straightedge, and struck off. Topping must be consolidated, floated, checked for trueness of surface, and refloated as specified for float finish.

Finishing

Give trowel finish standard floor topping surfaces.

Give other finishes standard floor topping surfaces as indicated.

3.13 CURING AND PROTECTION

ACI 301 Section 5, unless otherwise specified. Begin curing immediately following form removal. Avoid damage to concrete from vibration created by blasting, pile driving, movement of equipment in the vicinity, disturbance of formwork or protruding reinforcement, and any other activity resulting in ground vibrations. Protect concrete from injurious action by sun, rain, flowing water, frost, mechanical injury, tire marks, and oil stains. Do not allow concrete to dry out from time of placement until the expiration of the specified curing period. Do not use membrane-forming compound on surfaces where appearance would be objectionable, on any surface to be painted, where coverings are to be bonded to the concrete, or on concrete to which other concrete is to be bonded. If forms are removed prior to the expiration of the curing period, provide another curing procedure specified herein for the remaining portion of the curing period. Provide moist curing for those areas receiving liquid chemical sealer-hardener or epoxy coating. Allow curing compound/sealer installations to cure prior to the installation of materials that adsorb VOCs.

3.13.1 Curing Periods

ACI 301 Section 5, except 10 days for retaining walls, pavement or chimneys. Begin curing immediately after placement. Protect concrete from premature drying, excessively hot temperatures, and mechanical injury; and maintain minimal moisture loss at a relatively constant temperature for the period necessary for hydration of the cement and hardening of the concrete. The materials and methods of curing are subject to approval by the Contracting Officer.

3.13.2 Curing Formed Surfaces

Accomplish curing of formed surfaces, including undersurfaces of girders, beams, supported slabs, and other similar surfaces by moist curing with forms in place for full curing period or until forms are removed. If forms are removed before end of curing period, accomplish final curing of formed surfaces by any of the curing methods specified above, as applicable.

3.13.3 Curing Unformed Surfaces

Accomplish initial curing of unformed surfaces, such as monolithic slabs, floor topping, and other flat surfaces, by membrane curing.

Unless otherwise specified, accomplish final curing of unformed surfaces by any of curing methods specified, as applicable.

Accomplish final curing of concrete surfaces to receive liquid floor

hardener of finish flooring by moisture-retaining cover curing.

3.13.4 Temperature of Concrete During Curing

When temperature of atmosphere is 41 degrees F and below, maintain temperature of concrete at not less than 55 degrees F throughout concrete curing period or 45 degrees F when the curing period is measured by maturity. When necessary, make arrangements before start of concrete placing for heating, covering, insulation, or housing as required to maintain specified temperature and moisture conditions for concrete during curing period.

When the temperature of atmosphere is 80 degrees F and above or during other climatic conditions which cause too rapid drying of concrete, make arrangements before start of concrete placing for installation of wind breaks, of shading, and for fog spraying, wet sprinkling, or moisture-retaining covering of light color as required to protect concrete during curing period.

Changes in temperature of concrete must be uniform and not exceed 37 degrees F in any 1 hour nor 80 degrees F in any 24-hour period.

3.13.5 Protection from Mechanical Injury

During curing period, protect concrete from damaging mechanical disturbances, particularly load stresses, heavy shock, and excessive vibration and from damage caused by rain or running water.

3.13.6 Protection After Curing

Protect finished concrete surfaces from damage by construction operations.

3.14 FIELD QUALITY CONTROL

3.14.1 Sampling

ASTM C172/C172M. Collect samples of fresh concrete to perform tests specified. ASTM C31/C31M for making test specimens.

3.14.2 Testing

3.14.2.1 Slump Tests

ASTM C143/C143M. Take concrete samples during concrete placement/discharge. The maximum slump may be increased as specified with the addition of an approved admixture provided that the water-cementitious material ratio is not exceeded. Perform tests at commencement of concrete placement, when test cylinders are made, and for each batch (minimum) or every 20 cubic yards (maximum) of concrete.

3.14.2.2 Temperature Tests

Test the concrete delivered and the concrete in the forms. Perform tests in hot or cold weather conditions (below 50 degrees F and above 80 degrees F) for each batch (minimum) or every 20 cubic yards (maximum) of concrete, until the specified temperature is obtained, and whenever test cylinders and slump tests are made.

3.14.2.3 Compressive Strength Tests

ASTM C39/C39M. Make six 6 inch by 12 inch test cylinders for each set of tests in accordance with ASTM C31/C31M, ASTM C172/C172M and applicable requirements of ACI 305R and ACI 306R. Take precautions to prevent evaporation and loss of water from the specimen. Test two cylinders at 7 days, two cylinders at 28 days, and hold two cylinder in reserve. Take samples for strength tests of each mix design of and for concrete placed each day not less than once a day, nor less than once for each 100 cubic yards of concrete for the first 500 cubic yards, then every 500 cubic yards thereafter, nor less than once for each 5400 square feet of surface area for slabs or walls. For the entire project, take no less than five sets of samples and perform strength tests for each mix design of concrete placed. Each strength test result must be the average of two cylinders from the same concrete sample tested at 28 days. Concrete compressive tests must meet the requirements of ACI 318 Section 5.6. Retest locations represented by erratic core strengths. Where retest does not meet concrete compressive strength requirements submit a mitigation or remediation plan for review and approval by the contracting officer. Repair core holes with nonshrink grout. Match color and finish of adjacent concrete.

3.14.2.4 Air Content

ASTM C173/C173M or ASTM C231/C231M for normal weight concrete . Test air-entrained concrete for air content at the same frequency as specified for slump tests.

3.14.2.5 Unit Weight of Structural Concrete

ASTM C567/C567M and ASTM C138/C138M. Determine unit weight of lightweight and normal weight concrete. Perform test for every 20 cubic yards maximum.

3.14.2.6 Strength of Concrete Structure

The strength of the concrete structure will be considered to be deficient if any of the following conditions are identified:

Failure to meet compressive strength tests as evaluated

Reinforcement not conforming to requirements specified

Concrete which differs from required dimensions or location in such a manner as to reduce strength

Concrete curing and protection of concrete against extremes of temperature during curing, not conforming to requirements specified

Concrete subjected to damaging mechanical disturbances, particularly load stresses, heavy shock, and excessive vibration

Poor workmanship likely to result in deficient strength

Where the strength of the concrete structure is considered deficient submit a mitigation or remediation plan for review and approval by the contracting officer.

3.14.2.7 Non-Conforming Materials

Factors that indicate that there are non-conforming materials include (but

not limited to) excessive compressive strength, inadequate compressive strength, excessive slump, excessive voids and honeycombing, concrete delivery records that indicate excessive time between mixing and placement, or excessive water was added to the mixture during delivery and placement. Any of these indicators alone are sufficient reason for the Contracting Officer to request additional sampling and testing.

Investigations into non-conforming materials must be conducted at the Contractor's expense. The Contractor must be responsible for the investigation and must make written recommendations to adequately mitigate or remediate the non-conforming material. The Contracting Officer may accept, accept with reduced payment, require mitigation, or require removal and replacement of non-conforming material at no additional cost to the Government.

3.14.2.8 Testing Concrete Structure for Strength

When there is evidence that strength of concrete structure in place does not meet specification requirements or there are non-conforming materials, make cores drilled from hardened concrete for compressive strength determination in accordance with ASTM C42/C42M, and as follows:

Take at least three representative cores from each member or area of concrete-in-place that is considered potentially deficient. Location of cores will be determined by the Contracting Officer.

Test cores after moisture conditioning in accordance with ASTM C42/C42M if concrete they represent is more than superficially wet under service.

Air dry cores, (60 to 80 degrees F with relative humidity less than 60 percent) for 7 days before test and test dry if concrete they represent is dry under service conditions.

Strength of cores from each member or area are considered satisfactory if their average is equal to or greater than 85 percent of the 28-day design compressive strength of the class of concrete.

Fill core holes solid with patching mortar and finished to match adjacent concrete surfaces.

Correct concrete work that is found inadequate by core tests in a manner approved by the Contracting Officer.

3.15 REPAIR, REHABILITATION AND REMOVAL

Before the Contracting Officer accepts the structure the Contractor must inspect the structure for cracks, damage and substandard concrete placements that may adversely affect the service life of the structure. A report documenting these defects must be prepared which includes recommendations for repair, removal or remediation must be submitted to the Contracting Officer for approval before any corrective work is accomplished.

3.15.1 Crack Repair

Prior to final acceptance, all cracks in excess of 0.02 inches wide must be documented and repaired. The proposed method and materials to repair the cracks must be submitted to the Contracting Officer for approval. The proposal must address the amount of movement expected in the crack due to temperature changes and loading.

3.15.2 Repair of Weak Surfaces

Weak surfaces are defined as mortar-rich, rain-damaged, uncured, or containing exposed voids or deleterious materials. Concrete surfaces with weak surfaces less than 1/4 inch thick must be diamond ground to remove the weak surface. Surfaces containing weak surfaces greater than 1/4 inch thick must be removed and replaced or mitigated in a manner acceptable to the Contracting Officer.

3.15.3 Failure of Quality Assurance Test Results

Proposed mitigation efforts by the Contractor must be approved by the Contracting Officer prior to proceeding.

-- End of Section --

SECTION 03 45 00

PRECAST ARCHITECTURAL CONCRETE
11/11

PART 1 GENERAL

1.1 REFERENCES

The publications listed below form a part of this specification to the extent referenced. The publications are referred to within the text by the basic designation only.

AMERICAN CONCRETE INSTITUTE INTERNATIONAL (ACI)

ACI 117	(2010; Errata 2011) Specifications for Tolerances for Concrete Construction and Materials and Commentary
ACI 211.1	(1991; R 2009) Standard Practice for Selecting Proportions for Normal, Heavyweight and Mass Concrete
ACI 211.2	(1998; R 2004) Standard Practice for Selecting Proportions for Structural Lightweight Concrete
ACI 214R	(2011) Evaluation of Strength Test Results of Concrete
ACI 301	(2010; Errata 2011) Specifications for Structural Concrete
ACI 304R	(2000; R 2009) Guide for Measuring, Mixing, Transporting, and Placing Concrete
ACI 305.1	(2006) Specification for Hot Weather Concreting
ACI 305R	(2010) Guide to Hot Weather Concreting
ACI 306.1	(1990; R 2002) Standard Specification for Cold Weather Concreting
ACI 318	(2011; Errata 1 2011; Errata 2 2012; Errata 3-4 2013) Building Code Requirements for Structural Concrete and Commentary
ACI SP-66	(2004) ACI Detailing Manual

AMERICAN SOCIETY OF CIVIL ENGINEERS (ASCE)

ASCE 7	(2010; Errata 2011; Supp 1 2013) Minimum Design Loads for Buildings and Other Structures

AMERICAN WELDING SOCIETY (AWS)

AWS D1.1/D1.1M	(2010; Errata 2011) Structural Welding Code - Steel
AWS D1.4/D1.4M	(2011) Structural Welding Code - Reinforcing Steel

AMERICAN WOOD PROTECTION ASSOCIATION (AWPA)

AWPA C1	(2003) All Timber Products - Preservative Treatment by Pressure Processes
AWPA C2	(2003) Lumber, Timber, Bridge Ties and Mine Ties - Preservative Treatment by Pressure Processes

ASME INTERNATIONAL (ASME)

ASME B18.21.1	(2009) Washers: Helical Spring-Lock, Tooth Lock, and Plain Washers (Inch Series)

ASTM INTERNATIONAL (ASTM)

ASTM A153/A153M	(2009) Standard Specification for Zinc Coating (Hot-Dip) on Iron and Steel Hardware
ASTM A167	(2011) Standard Specification for Stainless and Heat-Resisting Chromium-Nickel Steel Plate, Sheet, and Strip
ASTM A185/A185M	(2007) Standard Specification for Steel Welded Wire Reinforcement, Plain, for Concrete
ASTM A27/A27M	(2010) Standard Specification for Steel Castings, Carbon, for General Application
ASTM A36/A36M	(2014) Standard Specification for Carbon Structural Steel
ASTM A416/A416M	(2012) Standard Specification for Steel Strand, Uncoated Seven-Wire for Prestressed Concrete
ASTM A449	(2010) Standard Specification for Hex Cap Screws, Bolts, and Studs, Steel, Heat Treated, 120/105/90 ksi Minimum Tensile Strength, General Use
ASTM A47/A47M	(1999; R 2014) Standard Specification for Ferritic Malleable Iron Castings
ASTM A496/A496M	(2007) Standard Specification for Steel Wire, Deformed, for Concrete Reinforcement
ASTM A497/A497M	(2007) Standard Specification for Steel

	Welded Wire Reinforcement, Deformed, for Concrete
ASTM A563	(2007a; R2014) Standard Specification for Carbon and Alloy Steel Nuts
ASTM A615/A615M	(2014) Standard Specification for Deformed and Plain Carbon-Steel Bars for Concrete Reinforcement
ASTM A653/A653M	(2015) Standard Specification for Steel Sheet, Zinc-Coated (Galvanized) or Zinc-Iron Alloy-Coated (Galvannealed) by the Hot-Dip Process
ASTM A706/A706M	(2014) Standard Specification for Low-Alloy Steel Deformed and Plain Bars for Concrete Reinforcement
ASTM A966/A966M	(2008; R 2012) Standard Test Method for Magnetic Particle Examination of Steel Forgings Using Alternating Current
ASTM B370	(2012) Standard Specification for Copper Sheet and Strip for Building Construction
ASTM C109/C109M	(2012) Standard Test Method for Compressive Strength of Hydraulic Cement Mortars (Using 2-in. or (50-mm) Cube Specimens)
ASTM C114	(2011b) Standard Test Methods for Chemical Analysis of Hydraulic Cement
ASTM C115	(2010) Standard Test Method for Fineness of Portland Cement by the Turbidimeter
ASTM C117	(2013) Standard Test Method for Materials Finer than 75-um (No. 200) Sieve in Mineral Aggregates by Washing
ASTM C123/C123M	(2012) Standard Test Method for Lightweight Particles in Aggregate
ASTM C125	(2013) Standard Terminology Relating to Concrete and Concrete Aggregates
ASTM C127	(2012) Standard Test Method for Density, Relative Density (Specific Gravity), and Absorption of Coarse Aggregate
ASTM C128	(2012) Standard Test Method for Density, Relative Density (Specific Gravity), and Absorption of Fine Aggregate
ASTM C131	(2006) Standard Test Method for Resistance to Degradation of Small-Size Coarse Aggregate by Abrasion and Impact in the Los Angeles Machine

ASTM C136	(2006) Standard Test Method for Sieve Analysis of Fine and Coarse Aggregates
ASTM C138/C138M	(2013a) Standard Test Method for Density ("Unit Weight"), Yield, and Air Content (Gravimetric) of Concrete
ASTM C142/C142M	(2010) Standard Test Method for Clay Lumps and Friable Particles in Aggregates
ASTM C143/C143M	(2012) Standard Test Method for Slump of Hydraulic-Cement Concrete
ASTM C150/C150M	(2012) Standard Specification for Portland Cement
ASTM C151/C151M	(2009) Standard Test Method for Autoclave Expansion of Hydraulic Cement
ASTM C172/C172M	(2010) Standard Practice for Sampling Freshly Mixed Concrete
ASTM C183	(2008) Standard Practice for Sampling and the Amount of Testing of Hydraulic Cement
ASTM C185	(2008) Standard Test Method for Air Content of Hydraulic Cement Mortar
ASTM C186	(2005) Standard Test Method for Heat of Hydration of Hydraulic Cement
ASTM C191	(2008) Standard Test Method for Time of Setting Hydraulic Cement by Vicat Needle
ASTM C192/C192M	(2015) Standard Practice for Making and Curing Concrete Test Specimens in the Laboratory
ASTM C204	(2011) Standard Test Method for Fineness of Hydraulic Cement by Air Permeability Apparatus
ASTM C231/C231M	(2010) Standard Test Method for Air Content of Freshly Mixed Concrete by the Pressure Method
ASTM C232/C232M	(2012) Standard Test Methods for Bleeding of Concrete
ASTM C233/C233M	(2011) Standard Test Method for Air-Entraining Admixtures for Concrete
ASTM C260/C260M	(2010a) Standard Specification for Air-Entraining Admixtures for Concrete
ASTM C266	(2008; E 2011) Standard Test Method for Time of Setting of Hydraulic-Cement Paste by Gillmore Needles

ASTM C289	(2007) Standard Test Method for Potential Alkali-Silica Reactivity of Aggregates (Chemical Method)
ASTM C29/C29M	(2009) Standard Test Method for Bulk Density ("Unit Weight") and Voids in Aggregate
ASTM C31/C31M	(2012) Standard Practice for Making and Curing Concrete Test Specimens in the Field
ASTM C33/C33M	(2013) Standard Specification for Concrete Aggregates
ASTM C39/C39M	(2015a) Standard Test Method for Compressive Strength of Cylindrical Concrete Specimens
ASTM C40	(2011) Standard Test Method for Organic Impurities in Fine Aggregates for Concrete
ASTM C403/C403M	(2008) Standard Test Method for Time of Setting of Concrete Mixtures by Penetration Resistance
ASTM C42/C42M	(2013) Standard Test Method for Obtaining and Testing Drilled Cores and Sawed Beams of Concrete
ASTM C451	(2008) Standard Test Method for Early Stiffening of Hydraulic Cement (Paste Method)
ASTM C494/C494M	(2013) Standard Specification for Chemical Admixtures for Concrete
ASTM C535	(2012) Standard Test Method for Resistance to Degradation of Large-Size Coarse Aggregate by Abrasion and Impact in the Los Angeles Machine
ASTM C566	(2013) Standard Test Method for Total Evaporable Moisture Content of Aggregate by Drying
ASTM C618	(2012a) Standard Specification for Coal Fly Ash and Raw or Calcined Natural Pozzolan for Use in Concrete
ASTM C70	(2013) Standard Test Method for Surface Moisture in Fine Aggregate
ASTM C88	(2013) Standard Test Method for Soundness of Aggregates by Use of Sodium Sulfate or Magnesium Sulfate
ASTM C94/C94M	(2014b) Standard Specification for Ready-Mixed Concrete

ASTM C989/C989M	(2013) Standard Specification for Slag Cement for Use in Concrete and Mortars
ASTM D1056	(2014) Standard Specification for Flexible Cellular Materials - Sponge or Expanded Rubber
ASTM D1149	(2007; R 2012) Standard Test Method for Rubber Deterioration - Surface Ozone Cracking in a Chamber
ASTM D3744/D3744M	(2011a) Standard Test Method for Aggregate Durability Index
ASTM D635	(2010) Standard Test Method for Rate of Burning and/or Extent and Time of Burning of Self-Supporting Plastics in a Horizontal Position
ASTM D746	(2013) Standard Test Method for Brittleness Temperature of Plastics and Elastomers by Impact
ASTM D75/D75M	(2014) Standard Practice for Sampling Aggregates

PRECAST/PRESTRESSED CONCRETE INSTITUTE (PCI)

PCI MNL-117	(1996) Manual for Quality Control for Plants and Production of Architectural Precast Concrete Products, 3rd Edition
PCI MNL-122	(2007) Architectural Precast Concrete, 3rd Edition

1.2 SUBMITTALS

Government approval is required for submittals with a "G" designation; submittals not having a "G" designation are for Contractor Quality Control approval. Submit the following in accordance with Section 01 33 00 SUBMITTAL PROCEDURES:

SD-02 Shop Drawings

Precast Components; G
Include:
Wall Panel at Entry Arch
Cornice
Accent Band
Column Capital
Window Sill
Wall Cap at Interior Knee Wall

Architect/Engineer review of shop drawings is for general conformance with design concept and project requirements only, and does not imply approval or any variance from the Contract Documents.

SD-03 Product Data

Cast-in embedded items and connectors; G

Connection devices; G

SD-04 Samples

Concrete Precast Components
Color and Finish to be selected from manufactures standards:
Colors: white and beigh Finish: Smooth

Alternate Option; Cast Stone

SD-05 Design Data

Precast concrete design calculations

Contractor-furnished mix design

Concrete mix design for repair of surface defects

Precast concrete connection and embedment design calculations

SD-06 Test Reports

Strength tests; G

Submit commercial testing results in accordance with PCI MNL-117 and as required in paragraph entitled "Sampling and Testing."

SD-07 Certificates

Manufacturer's Qualifications; G

SD-08 Manufacturer's Instructions

Installation of precast Components; G

Cleaning of Precast components; G

Include precast concrete components manufacturer's written recommendations for installation and cleaning.

SD-11 Closeout Submittals

Concrete batch ticket information; G

Calculations

Mix Design

Precast Concrete Manufacturer

Precast Concrete Installer

Concrete

Exposed-to-View Concrete

Backing Concrete

Slump

Air Content

Compressive Strength

Mock-Up

Pre-Installation Meeting

Tolerances

Portland Cement

Exposed-to-View Finished Surfaces

Air-Entrained Admixtures

Finish Aggregate

Gasket

Erection

1.3 MODIFICATION OF REFERENCES

In the referenced ACI and PCI publications, consider the advisory provisions to be mandatory. Interpret reference to the "Building Official," the "Structural Engineer," and the "Architect/Engineer" to mean the Contracting Officer.

1.4 GENERAL REQUIREMENTS

Precast concrete units must be designed and fabricated by an experienced and certified precast concrete manufacturer. The manufacturer needs to have been regularly and continuously engaged in the manufacture of precast concrete work similar to that indicated on the drawings for at least 3 years. The Contractor must submit a statement detailing the Manufacturer's Qualifications as specified in the Submittals paragraph. Coordinate precast work with the work of other trades.

Alternate product (if cost effective) to be Cast Stone. See Products section below for basic criteria.

1.5 DESIGN

1.5.1 Standards and Loads

Precast unit design must conform to ASCE 7, ACI 318 and PCI MNL-122. Indicate design loads for precast concrete on the drawings. A differential temperature of 192 degrees F, between interior and exterior faces of the units, must be considered in the design. Stresses due to restrained volume change caused by shrinkage and temperature differential, handling, transportation and erection must be accounted for in the design.

1.5.2 Connections

Connection of units to other members, or to other units must be of the type and configuration indicated. The design and sizing of connections for all design loads will be completed by the Contractor.

1.5.3 Concrete Strength

Precast concrete units must have a 28-day compressive strength of 5000 psi.

1.5.4 Concrete Proportion

Base the selection of proportions for concrete on the methodology presented in ACI 211.1 for normal weight concrete and ACI 211.2 for lightweight concrete. Develop the concrete proportion using the same type and brand of cement, the same type and gradation of aggregates, and the same type and brand of admixture that will be used in the manufacture of precast concrete units for the project. Do not use calcium chloride in precast concrete and admixtures containing chloride ions, nitrates, or other substances that are corrosive will not be used in prestressed concrete.

1.5.5 Calculations

Calculations for design of members and connections not shown must be made by a professional engineer experienced in the design of precast architectural concrete. Calculation will include the analysis of member for lifting stresses and the sizing of the lifting inserts.

1.5.6 Mix Design

The Contractor must submit the mix design formula giving the maximum nominal coarse aggregate size, the proportions of all ingredients and the type and amount of any admixtures that will be used in the manufacture of each strength and type of concrete, prior to commencing operations. Submit certified copies of laboratory test reports, including mill tests and all other test data, for portland cement, blended cement, pozzolan, ground granulated blast furnace slag, silica fume, and aggregates. The statement must be accompanied by test results from an approved testing laboratory, certifying that the proportions selected will produce concrete of the properties required. Make no substitutions without additional tests to verify that the concrete properties are satisfactory.

1.6 DELIVERY, STORAGE, AND HANDLING

Deliver packaged materials, except for Precast Components, to the project site in the original, unbroken packages or containers, each bearing a label clearly identifying manufacturer's name, brand name, weight or volume, and other pertinent information. Store packaged materials, and materials in containers, in a weathertight and dry place until ready for use.

Store products in manufacturer's unopened packaging in dry storage area, with ambient temperature between 30 degrees F and 120 degrees F, until installation.

1.7 STORAGE AND INSPECTION AT MANUFACTURER'S PLANT

Protect precast units temporarily stored at the manufacturer's plant from damage in accordance with PCI MNL-117 and PCI MNL-122. Immediately prior to shipment to the jobsite, all precast concrete units must be inspected

for quality to insure all precast units conform to the requirements specified. Inspection for quality will include, but will not be limited to, the following elements: color, texture, dimensional tolerances, chipping, cracking, staining, warping and honeycombing. Replace or repair all defective precast concrete units as approved.

1.8 PLANT INSPECTION

At the option of the Contracting Officer, precast units may be inspected. Precast units must be inspected by the QC representative prior to being transported to the job site. The Contractor is to give notice 14 days prior to the time the units will be available for plant inspection. Neither the exercise nor waiver of inspection at the plant will affect the Government's right to enforce contractual provisions after units are transported or erected.

1.8.1 Quality Certifications

Plants must be certified by the PCI Plant Certification Program for Architectural Precast Association (APA) certification or National Precast Concrete Association (NPCA). When plants are not currently enrolled in one of the three certification programs listed above then they must provide a product quality control system in accordance with PCI MNL-117 and perform concrete and aggregate quality control testing using an approved, independent commercial testing laboratory.

1.9 QUALIFICATIONS FOR PRECAST CONCRETE INSTALLER

Panels must be installed by an organization experienced in the installation of precast components.

Submit a letter of reference for the installer giving the qualifications of personnel, handling and erection equipment, lists of projects similar to specified work, and other information as may be required by the Contracting Officer.

1.10 CONCRETE SAMPLING AND TESTING

1.10.1 Test for Concrete Materials

Sample and test concrete materials proposed for use in the work as follows:

MATERIALS	REQUIREMENT	TEST METHOD	NUMBER OF TESTS
Aggregate	Sampling sieve analysis, calculating fineness modulus	ASTM D75/D75M ASTM C136 ASTM C125	One for each material source and grading size
	Amount of material passing No. 200 sieve	ASTM C117	

MATERIALS	REQUIREMENT	TEST METHOD	NUMBER OF TESTS
	Amount of friable particles	ASTM C142/C142M	
	Amount of organic impurities	ASTM C40	
	Amount of coal and lignite	ASTM C123/C123M	
	Magnesium sulfate soundness test	ASTM C88	
	Aggregate durability	ASTM D3744/D3744M	
	Specific gravity of fine aggregate	ASTM C128	
	Specific gravity of course aggregates	ASTM C127	
	Resistance to abrasion of small size course aggregate	ASTM C131 or ASTM C535	
	Potential reactivity to alkalis	ASTM C289	
Portland Cement	Sampling	ASTM C183	One for each material source, type and color
	Chemical analysis	ASTM C114	
	Fineness	ASTM C115 or ASTM C204	
	Autoclave expansion time of setting	ASTM C151/C151M, ASTM C191 or ASTM C266	
	Air Content of mortar	ASTM C185	

MATERIALS	REQUIREMENT	TEST METHOD	NUMBER OF TESTS
	Compressive strength	ASTM C109/C109M	
	Heat of hydration	ASTM C186	
	False set	ASTM C451	
Air-entraining admixture using air-entrained concrete made of the proposed concrete materials	Materials for test	ASTM C233/C233M	One set of tests for each type and color of portland cement proposed for use
	Number of specimens	ASTM C233/C233M, Table 1	
	Bleeding	ASTM C232/C232M	
	Time of setting	ASTM C403/C403M and ASTM C233/C233M	
	Compressive strength test specimen	ASTM C192/C192M and ASTM C233/C233M	
	Compressive strength test at 3, 7 and 28 calendar days	ASTM C39/C39M and ASTM C233/C233M	

MATERIALS	REQUIREMENT	TEST METHOD	NUMBER OF TESTS
Concrete made of the proposed concrete materials	Water absorption	As specified	Three 4 by 8 inch cylinders or 4 inch cube concrete specimens for each type of mixture required

Submit reports for each material sampled and tested prior to the start of work. Reports must contain the project name and number, date, name of Contractor, name of precast wall panel manufacturer, name of concrete testing service, source of concrete aggregates, generic name of aggregate, and values specified.

1.10.2 Concrete Design Mixes

Concrete design mix for concrete, including Exposed-to-View Concrete facing mixture and Backing Concrete mixture, must be determined and tested as follows:

REQUIREMENT	TEST METHOD	NUMBER OF TESTS
Specific gravity and absorption of fine aggregate	ASTM C128	As required for the concrete aggregates
Specific gravity and absorption of course aggregate	ASTM C127	
Moisture content of both fine and coarse aggregate	ASTM C70 and ASTM C566	
Dry-rodded unit weight of course aggregate	ASTM C29/C29M	
Trial mixes using at least three different water/cement ratios, minimum allowable cement content and maximum allowable slump; all with air-entrainment	ACI 211.1	As required to determine the concrete mix having the properties specified

REQUIREMENT	TEST METHOD	NUMBER OF TESTS
Making and curing concrete specimens in the laboratory	ASTM C192/C192M	Two sets of three specimens for each design mix
Sampling fresh concrete in the laboratory	ASTM C192/C192M	One for each set of design mix specimens
Slump	ASTM C143/C143M ACI 211.1	
Air Content	ASTM C231/C231M	
Yield	ASTM C138/C138M	
Compressive Strength	ASTM C39/C39M	Three specimens tested at 7 calendar days and three specimens tested at 28 calendar days

From the results of the tests, plot a curve for each concrete mixture, showing the relationships between water/cement ratios and compressive strengths. Maximum permissible water/cement ratio must be that value not exceeding the maximum water/cement ratio specified, indicated by the curve to produce a design minimum laboratory compressive strength at 28 calendar days not less than that specified.

Submit report of the design mix for both exposed-to-view facing mixture and backing mixture for approval at least 15 calendar days prior to start of fabricating panels. Report is to contain the project name and number, date, name of Contractor, name of precast concrete wall panel manufacturer, name of concrete testing service, use of concrete mixture (facing or backing), source of concrete aggregates for each mixture, manufacturer and brand name of manufactured materials, the exact proportions of each concrete mix, the concrete properties specified, and the test results for each requirement specified for the concrete design mixes.

1.10.3 Quality Control Testing During Panel Fabrication

Sample and test concrete for quality control during fabrication as follows:

REQUIREMENT	TEST METHOD	NUMBER OF TESTS
Sampling fresh concrete	ASTM C172/C172M except modified for slump per ASTM C94/C94M	As required for each test

REQUIREMENT	TEST METHOD	NUMBER OF TESTS
Slump test	ASTM C143/C143M	One for each concrete load at point of discharge and one for each set of compressive strength tests
Air Content by pressure method	ASTM C231/C231M	One for each set of compressive strength tests
Compressive test specimens	ASTM C31/C31M	One set of six specimens for each Compressive Strength test

Compression test specimens may be either standard 6 by 12 inch cylinders or 4-inchcubes. Cubes may be molded individually or cut from slabs. Preparation and testing of cube specimens must be as nearly consistent with the test methods specified as possible, with the exception that the concrete will be placed in a single layer.

Curing of compression test specimens must be the same as the curing method used for the precast concrete components panels until panels are stripped of forms and then standard moist cure will continue.

REQUIREMENT	TEST METHOD	NUMBER OF TESTS
Concrete temperature		Each time a set of compression test specimens is made
Compressive strength tests	ASTM C39/C39M	One set of facing strength tests mix and one set of backing mix for every ten panels or fraction thereof cast in any one day; two specimens in each set tested at 7 calendar days; three specimens in each set tested at 28 calendar days, and one specimen in each set retained in reserve for testing if required

Submit test reports on the same day that tests are made.

Test results that fail to meet the value for any concrete property specified in "Quality of Concrete" must be noted in the report.

Reports for Compressive Strength tests need to contain the project name and number, date of concrete placement, name of Contractor, name of precast concrete components panel manufacturer, name of concrete testing service, panel identification letter and number, use of concrete mixture (facing or backing), design compressive strength at 28 calendar days, concrete-mix proportions and materials, and compressive breaking strength and type of break.

If 4-inch cubes are used for compressive strength specimens, average strength of the cubes at any test age must be multiplied by the factor of 0.8 to arrive at an estimate of the corresponding 6 by 12 inch cylinder strength. Report both of these values .

1.11 QUALITY ASSURANCE

1.11.1 Precast Components Drawings

Submit drawings for each Precast Component.

a. Precast dimensions, cross-section, and edge details; location, size, and type of reinforcement, including reinforcement necessary for safe handling and erection of panels. Comply with ACI SP-66.

b. Layout, dimensions, and identification of each panel, corresponding to installation sequence.

c. Setting drawings, instructions, and directions for installation of concrete inserts.

d. Location and details of anchorage devices and lifting devices embedded in panels, and connection details to building framing system.

1.11.2 Design Calculations

Submit design calculations prepared and sealed by a registered professional engineer demonstrating compliance with indicated loading conditions.

1.11.3 Connection and Embedment Design Calculations

Submit design calculations prepared and sealed by a professional engineer demonstrating compliance with the indicating connection and embedment details.

1.11.4 Mix Designs

Sixty days minimum prior to concrete placement, submit a mix design for each strength and type of concrete. Include a complete list of materials including type; brand; source and amount of cement, fly ash, pozzolan, ground slag, and admixtures; and applicable reference specifications.

1.11.5 Concrete Surface Finish Sample

Submit a concrete all Precast Components samples approximately 12 inches by 12 inches by approximately 1 1/2 inches in thickness, to illustrate quality, color, and texture of both exposed-to-view surface finish and finish of panel surfaces that will be concealed by other construction.

1.11.6 Required Records

ASTM C94/C94M. Submit mandatory batch ticket information for each load of ready-mixed concrete.

1.11.7 Mock-Up

Apply specified products to determine acceptability of appearance and optimum coverage rate required for application

1. Finish areas designated by Contracting Officers Representative.
2. Apply in accordance with manufacturer's instructions.
3. After materials have cured, water test surface to determine that sufficient water repellent has been applied.
4. Do not proceed with remaining work until mock-up is approved by Architect.

Provide mock-up to establish that proposed materials and construction techniques provide acceptable visual effect. Materials used for mock-up should be those proposed for actual construction; retain samples of cement and aggregates used.

Provide mock-up sections of building and structures which typify the most difficult areas to build.

Do not proceed with remaining work until workmanship, color, and detail are approved by Architect. Modify mock-up area as required to produce acceptable work. After approval by Contracting Officers Representative, transport mock-up to job-sit.

1.11.8 Pre-Installation Meeting

Hold a meeting at the job site with representative of the manufacturer and the applicator prior to application of water repellents. Notify the Owner and the Architect at least 3 days in advance of the time of the meeting.

1.12 Tolerances

Dimensions of the finished panel, at the time of erection in the structure, must conform to the tolerances for precast, non-prestressed elements in ACI 117, unless otherwise specified by the Architect.

PART 2 PRODUCTS

An alternate product to precast can be used if there is a cost saving. Alternate; Cast Stone complying with ASTM C 1364 and the following physical properties;

a. Compressive Strength - ASTM C 1194: 6,500 psi minimum for products at 28 days.
b. Absorption - ASTM C 1195: 6% maximum by the cold water method, or 10% maximum by the boiling method for products at 28 days
c. Air Content – ASTM C 173 or C 231, for wet cast product shall be 4-8% for units exposed to freeze-thaw environments. Air entrainment is not required for VDT products
d. Freeze-thaw – ASTM C 1364: The CPWL shall be less than 5% after 300 cycles of freezing and thawing.
e. Linear Shrinkage – ASTM C 426: Shrinkage shall not exceed 0.065%

2.1 PROPERTIES OF CONCRETE

PROPERTY	VALUE
Design compressive strength at 28 calendar days, 6 by 12 inch cylinders	Not less than 5,000 psi
Maximum aggregate size	As specified
Maximum water/cement ratio	4.25 gallons per 94-pound sack of cement
Minimum cement content	7.5 94-pound sacks sacks of cement per 0.76 cubic yard
Slump at point of concrete discharge	Not to exceed 2 inches
Total air content by volume at point of concrete discharge	Not less than 4 percent nor more than 6 percent

2.2 CONCRETE

2.2.1 Contractor-Furnished Mix Design

ACI 211.1 and ACI 301. Concrete must have a 28-day minimum compressive strength of 4000 psi. Provide a dosage of air entraining agent which will produce 19 plus or minus 3 percent air in a 1 to 4 by weight standard sand mortar in accordance ASTM C185.

2.2.2 Exposed-to-View Facing Mixture

Provide aggregates for exposed-to-view facing mixture; white, gray, or buff portland cement or a blend of two or more portland cements; air-entraining admixture; and water. Provide exact proportions of facing mixture to produce concrete having the specified properties and capable of obtaining the approved surface color and finish.

2.2.3 Backing Mixture

Provide the approved mix design.

2.3 MATERIALS

2.3.1 Fine Aggregates

ASTM C33/C33M. The optional method of reducing the No. 50 and No. 100 sieve aggregates does not apply. The restriction to use only fine aggregates that do not contain any materials that are deleteriously reactive with alkalis in cement does apply.

2.3.2 Coarse Aggregate

ASTM C33/C33M, Size No. 57 , Class 5S. The restriction to use only coarse aggregates that do not contain any materials that are deleteriously reactive with alkalis in cement does apply. Aggregate must not contain slag or crushed concrete.

2.3.3 Exposed Aggregate

In addition to the above, facing mixture aggregate, and aggregate for homogeneous panels with exposed aggregate finish, will be crushed stone of size and color to produce exposed surfaces to match the color and texture of the sample on file with the Contracting Officer.

2.3.4 Cement

ASTM C150/C150M, Type I or IIFor exposed concrete, use one manufacturer for each type of cement, pozzolan, fly ash, and ground slag.

2.3.5 Fly Ash and Pozzolan

ASTM C618, Type N, F, or C, except that the maximum allowable loss on ignition will be 6 percent for Type N and F. Add with cement.

2.3.6 Ground Iron Blast-Furnace Slag

ASTM C989/C989M, Grade 100 or 120.

2.3.7 Admixtures

ASTM C260/C260M for air-entraining admixtures. Other admixtures: ASTM C494/C494M. Certify that admixtures are free of chlorides.

2.3.8 Water

Fresh, clean, and potable.

2.3.9 Reinforcement

All exposed steel must be phosphate treated, primed, and coated to prevent rust.

2.3.9.1 Reinforcing Bars

ACI 301 unless otherwise specified. ASTM A706/A706M, Grade 60, ASTM A615/A615M,60, or ASTM A966/A966M, Grade 40, or ASTM A966/A966M, Grade 60.

2.3.9.2 Welded Wire Fabric

ASTM A185/A185M or ASTM A497/A497M.

2.3.9.3 Supports for Concrete Reinforcement

Include bolsters, chairs, spacers, and other devices necessary for proper spacing, supporting, and fastening in place.

a. Supports: ASTM A615/A615M, wire-type reinforcing bars and welded wire fabric.

b. Legs of supports in contact with formwork: Stainless steel, ASTM A167, Type 302 or Type 304.

2.3.10 Prestressing Strands

Prestressing strands need to conform to ASTM A416/A416M.

2.3.11 Tie Wire

Tie wire must be soft monel or 18-8 stainless steel.

2.3.12 Inserts

Inserts will be manufacturer's standard, suited for the application.

2.3.13 Plates, Angles, Anchors and Embedment

Material will be as specified in PCI MNL-117. Coat steel items, other than stainless, with a rust-inhibiting paint or provide hot-dip galvanized steel. Steel items, including items embedded in concrete, must be either stainless steel or hot dip galvanized steel.

2.3.14 Form Release Agent

Release agent must be manufacturer's standard non-staining type.

2.3.15 Aggregates for Exposed-to-View Facing

Crush coarse aggregate by a means that will produce material of cubical shape with a minimum of elongated, thin, or partially fractured particles. Material or crushing methods that produce particles classified by petrographic examination as being weak, highly fractured or somewhat friable, or both, in excess of 16 percent of the particles in any whole sample will be rejected. Material for coarse aggregate must be free of substances that change color on oxidation. Obtain material used for the work from the same basic source and stratum. Quarry material to produce a uniformly colored aggregate that does not change color upon weathering. During quarrying operations, the uniformity of rock face color must be verified by periodically comparing the rock face color to the approved coarse aggregate sample.

Fine aggregate will be white quartz natural sand or stone screenings, or manufactured sand produced from white quartz. Aggregate must be free of substances that change color on oxidation. Color must conform to the approved sample.

2.3.16 Portland Cement

Portland cement must conform to ASTM C150/C150M, Type 1.

Use one brand and type of cement for formed concrete having exposed-to-view finished surfaces.

2.3.17 Ground Granulated Blast Furnace (GGBF) Slag

GGBF slag used must conform to ASTM C989/C989M, Grade 120 with between 25 to 50 percent maximum cement replacement by weight.

2.3.18 Air-Entrained Admixtures

Admixture must contain no sodium chloride or nitrates and will conform to ASTM C260/C260M.

2.4 Cast-In Embedded Items and Connectors

Design structural embedded anchorage and connections to panels to withstand gravity loads, live loads, dynamic loads, any volume change stresses inherent in the structure, and loads indicated.

2.4.1 Inserts

2.4.1.1 Threaded-Type Concrete Inserts

ASTM A47/A47M, Grade 32510 or 35018, or may be medium strength cast steel conforming to ASTM A27/A27M, Grade U-60-30. Provide galvanized ferrous casting having enlarged base with two nailing lugs minimum length less than the thickness of panel less 3/4 inch, and internally threaded to receive 3/4 inch diameter machine bolt. Ferrous castings must be ferritic malleable iron. Provide inserts hot-dip galvanized after fabrication in accordance with ASTM A153/A153M.

2.4.1.2 Flashing Reglets

Reglets must be sheet metal open-type with continuous groove not less than 1-1/8 inchesdeep by 3/16-inch wide at opening and sloped upward, designed to anchor snap-lock counter flashing.

Metal must be minimum 0.011-inch thick conforming to ASTM A167, Type 302 or 304, No. 1 finish, soft temper.

Metal must be copper strip weighing a minimum of 16 ounces per square foot, and conforming to ASTM B370, cold-rolled temper.

Metal is to be 26-gage galvanized steel sheet conforming to ASTM A653/A653M, G90.

2.4.2 Embedded Plates

ASTM A36/A36M, galvanized ferrous metal plate connectors for attachment to the structural framing using manufacturer standard construction procedures. Headed studs will use 60,000 psi steel with construction conforming to AWS D1.1/D1.1M, Type B. Deformed bar anchors must conform to ASTM A496/A496M. Provide embedded anchors galvanized after fabrication in accordance with ASTM A153/A153M.

2.4.3 Embedded Attachments

2.4.3.1 Embedded Wood Nailer

Kiln-dried Standard Grade Douglas Fir or No. 2 Grade Southern Pine. Surface four sides. Treat with waterborne pressure-preservative in accordance with AWPA C1 and AWPA C2. All wood needs to be air or kiln dried after treatment. Verify specific treatments by the report of an approved independent inspection agency. The AWPA C1 and AWPA C2 Quality Mark "C1" and "C2" on each piece will be accepted, in lieu of inspection reports, as evidence of compliance with applicable AWPA treatment standards.

2.4.4 Connection Devices

2.4.4.1 Clip Angles

ASTM A36/A36M steel, galvanized after fabrication in accordance with

ASTM A153/A153M.

2.4.4.2 Ferrous Casting Clamps

ASTM A47/A47M, Grade 32510 or Grade 35018 malleable iron or cast steel, or ASTM A27/A27M, Grade U-60-30, cast steel casting, hot-dip galvanized in accordance with ASTM A153/A153M.

2.4.4.3 Threaded Fasteners

Provide galvanized machine bolts, washers and, when required, nuts.

a. Bolts: ASTM A449, 3/4 inch diameter machine bolts with hexagon head.

b. Washers: ASME B18.21.1, medium or heavy lock-spring washers.

c. Nuts: ASTM A563, Grade C, heavy, hexagon-type nuts.

d. Square Nuts: ASTM A563, Grade A, plain, square-type nuts where required for slotted-type concrete inserts.

2.4.5 Form Materials

Provide forms and form-facing materials of wood, metal, plastic, or other approved material to produce concrete having the specified finish. Construct forms mortar-tight and of sufficient strength to withstand all pressures due to concrete placing operations and temperature changes within the specified fabrication tolerances.

2.5 PANEL FABRICATION

2.5.1 Formwork and Fabrication Tolerances

Provide metal or wood forms. Brace and stiffen against deformation. Provide form liners where required to produce indicated finish. Provide dimensional tolerances as follows:

Overall panel dimensions:	
10 feet or less	Plus 1/8 inch, minus zero
10 to 20 feet	Plus or minus 1/8 inch
20 feet or more	Plus of minus 3/16 inch
Thickness: Plus 1/4 inch, minus 1/8 inch	
Angular deviation of sides: Plus or minus one percent, 1/16 inch maximum	
Deviation from square (difference in length of two diagonals): Not to exceed 0.1 percent, 1/4 inch maximum	

Size and location of openings within one unit: Plus or minus 1/4 inch
Local smoothness (deviation from a true plane): Plus or minus 0.2 percent
Bowing (convex or concave): Length of bow/480 (0.2 percent), with a maximum of 5/8 inch
Position of reinforcement: Within 1/4 inch of indicated position
Position of anchorage devices: Plus or minus 1/2 inch
Position of pick-up devices: Plus or minus 3 inches

2.5.2 Reinforcement

ACI 301. Place reinforcing bars and welded wire fabric. Secure in position with tie wires, bar supports, and spacers.

2.5.3 Preparation for Placing Concrete

Remove hardened concrete, excess form parting compound, standing water, ice, snow, or other deleterious substances from form interiors and reinforcement before concrete placement. Secure reinforcement and embedded items.

2.5.4 Concrete Mixing and Conveying

2.5.4.1 Batch Plant, Mixer, Mixing, and Measuring of Materials

ASTM C94/C94M.

2.5.4.2 Conveying

Prevent segregation and loss of materials.

2.5.5 Concrete Placing

ACI 304R. Deposit concrete in the forms continuously or in layers of such thickness that no concrete will be placed on concrete which has hardened sufficiently to cause formation of seams or planes of weakness within the precast concrete Precast Components panel. Place concrete at a constant temperature of between 50 and 90 degrees F throughout fabrication of each panel. Make temperature of forms or molds the same as or close to the concrete temperature. For hot or cold weather, use methods recommended by ACI 305R and ACI 306.1. Vibrate and consolidate concrete to prevent segregation and to produce a high-density concrete free of honeycomb and rock pockets. When specified, the exposed-to-view facing mixture is required to be a minimum thickness of 3/4 inches. Place backing mixture before facing mixture attains initial set.

2.5.6 Identification Markings

Permanently mark each panel to indicate pick-up points, location, orientation in the building, and date of casting. Identification markings need to correlate with approved detail drawings. Do not locate in exposed-to-view finished surfaces.

2.5.7 Finishing

2.5.7.1 Unformed Concealed Surfaces (Standard Smooth Finish)

Provide a trowel finish. Level surface with a straightedge, and strike off. After surface water has disappeared, float and trowel surface. Provide smooth finished surface, free of trowel marks, and uniform in texture and appearance.

2.5.7.2 Smooth, Exposed-to-View Surfaces

Provide a standard smooth finish to all exposed-to-view surfaces of panels, unless otherwise indicated. Provide a concrete surface having the texture imparted by a steel form or other approved smooth surfaces form-facing material.

2.5.7.3 Exposed Aggregate Finish

Provide for exposed-to-view surfaces of panels, including chamfers, edges, recesses, and projections, unless otherwise indicated. Provide standard smooth finish with outer skin of mortar removed, before concrete has hardened, and exposing coarse aggregate. A chemical retarder may be used on exposed face to facilitate removal of mortar. Match finish of the approved surface finish sample. Expose aggregates as soon after concrete placing as practicable by wire brushing, sand blasting, or bush hammering or by washing the concrete surface with a diluted solution of muriatic acid to thoroughly clean exposed aggregate. Rinse concrete surface with fresh, clean water to remove traces of acid.

2.5.7.4 Other Surfaces

Surfaces of precast units not exposed to view or not otherwise indicated to be finished are to be finished in accordance with Section 03 30 00 CAST-IN-PLACE CONCRETE.

2.5.8 Curing

Provide moist or steam curing or curing compound. Do not remove panel from forms; prevent moisture loss and maintain 50 degrees F minimum for at least 24 hours after finishing. Maintain panels in a surface damp condition at 50 degrees F minimum until concrete has attained 75 percent minimum of the design compressive strength.

2.5.9 Repair of Surface Defects

Cut out defective areas to solid concrete, with edges of cuts perpendicular to the surface of the concrete, and clean thoroughly. Dampen area to be patched and brush-coat with nonshrink grout or bonding agent. Patch the surface in accordance with procedures previously submitted by the Contractor and approved by the Contracting Officer. Where exposed to view, the patches, when dry, needs to be indistinguishable from the surrounding surfaces.

2.5.9.1 Smooth, Concealed Surfaces

Acceptable defective area will be limited to holes left by rods and other temporary inserts, and to honeycomb or rock pockets of 1/4 inch diameter maximum. Remove fins and other projections on the surfaces.

2.5.9.2 Exposed-to-View Surfaces

The combined area of acceptable defective areas must not exceed 0.2 percent of the exposed-to-view surface area and will be limited to holes of 1/4 inch diameter maximum.

2.5.10 Embedded Accessories

Furnish and install anchors, inserts, lifting devices, and other accessories which are to be embedded in the precast units in accordance with the approved detail drawings. Embedded items must be accurately positioned in their designed location, and have sufficient anchorage and embedment to satisfy design requirements.

2.5.11 Stripping

Do not remove precast concrete units from forms until units develop sufficient strength to safely strip the formwork and to remove the precast concrete units from the forms to prevent damage to the units from overstress or chipping.

2.5.12 Forms

Forms and facing materials must be wood, metal, plastic, or other approved material that is non-reactive with concrete. Completed panels must conform to the shapes, lines, and dimensions indicated, within the limits of the specified fabrication tolerances.

2.5.13 Built-In Anchorage Devices

Accurately position and securely anchor all anchorage devices. Openings in anchorage devices must be filled temporarily to prevent entry of concrete.

2.5.14 Lifting Devices

Lifting devices must be provided, and designed for a safety factor of 4, which includes 100 percent impact. Do not use brittle material.

2.5.15 Weather Limitations

Do not place concrete when the temperature of the atmosphere is below 40 degrees Fnor during rain, sleet, or snow unless adequate protection is provided. Protection during inclement weather must prevent entry of rain, sleet, or snow into the forms or into the fresh concrete.

2.5.16 Finishing for Formed Surfaces

Prior to panel fabrication, three samples of Exposed-to-View Surface Finish (12 by 12 inches), and Finish Aggregate for exposed-to-view facing material is to be provided by the Contractor.

After approval of the surface, Contractor must provide one full size sample

Wall Panel. Approved sample may be used in construction when properly identified.

Upon removal of forms, repair and patch defective areas. Where the finished surface will be exposed to view, the combined area of defective areas must not exceed 0.2 percent of the surface and will be limited to honeycomb or rock pockets not deep enough to expose the reinforcement. Where the finished surface will be concealed by other construction, defective areas are limited to holes left by the rods and other temporary inserts and honeycomb or rock pockets not deep enough to expose the reinforcement. Defective areas must be cut out to solid concrete, cleaned, and patched with grout. Where concrete surface will be exposed to view, the patches, when dry, must be indistinguishable from the surrounding surfaces.

2.6 JOINT MATERIALS

Gasket must be elastomeric material, premolded to cross section indicated.

Material must be a vulcanized closed-cell expanded chloroprene conforming to ASTM D1056, Grade No. SCE 42, with the following additional properties:

Brittleness temperature will be minus 40 degrees F when tested in accordance with ASTM D746.

Flammability resistance needs to be self-extinguishing when tested in accordance with ASTM D635.

Resistance to ozone must be "no cracks" after exposure of a sample, at 20 percent elongation, to an ozone concentration of 100 parts per million of air by volume in air for 100 hours at 104 degrees F when tested in accordance with ASTM D1149.

PART 3 EXECUTION

3.1 GENERAL

Install panels and accessories in accordance with the approved shop drawings and as specified.

If substrate preparation is the responsibility of an installer other than the Contractor, notify Architect of unsatisfactory preparation before proceeding.

3.2 EXAMINATION

Do not begin installation until supporting structures have been properly prepared.

If support structure is the responsibility of another installer, notify Architect of unsatisfactory preparation before proceeding.

3.3 INSTALLATION

Verify that all parts of the supporting structure are complete and ready to receive the panels and that site conditions are conducive to proper installation. Install precast concrete Precast Components panels and accessories in accordance with approve detail drawings and descriptive data, and as specified below.

3.3.1 Building Framing System

Provide supporting members, including anchorage items attached to or embedded in building structural elements, prior to placement of panels.

3.3.2 Placing Panels

Panels must attain the specified 28-day compressive design strength prior to placement. Provide temporary supports and bracing, as required, to maintain panel position and alignment during attachment to the building framing system. Secure adjustable connections after panels have been properly positioned. All welded connections need to conform to the requirements of AWS D1.1/D1.1M and AWS D1.4/D1.4M.

3.3.3 Erection Tolerances

Locate panels to accommodate adjacent products, proper joint width, and alignment with adjacent precast members. Non-cumulative dimensional tolerances for erection of panels are as follows:

a. Face width of joint

Panel dimension normal to joint

10 feet or under: Plus or minus 3/16 in

10 feet to 20 feet: Plus 3/16 inch minus 1/4 inch

Each additional 10 feet: Plus or minus 1/16 inch

b. Joint taper (panel edges not parallel): 0.2 percent or 1/16 inch total, whichever is larger, but not greater than 3/8 inch

c. Panel alignment

Jog in alignment of edge: 1/4 inch

Offset in face of panel (exterior face unless otherwise noted):1/4 inch

d. Variation from theoretical position, any location: Plus or minus 1/4 inch

e. Deviation from plumb: 0.2 percent, 3/8 inch maximum

f. Maximum warpage after erection: One corner out of plane of other three, 0.5 percent of distance from nearer adjacent corner, or1/8 inch

g. Differential bowing or camber of adjacent panels: 1/4 inch maximum

3.3.4 Joints

Joint widths between panels will be as specified unless otherwise indicated. Provide joints with sealants in accordance with Section 07 92 00 JOINT SEALANTS.

3.3.4.1 JOINT SEALING

Joint sealing will be as specified in Section 07 92 00 JOINT SEALANTS.

3.3.5 Protection

Protect exposed-to-view facing from staining and other damage. Do not allow laitance to penetrate, stain, or harden on exposed surfaces.

3.4 ERECTION

Erect precast units in accordance with the detail drawings and without damage to other units or to adjacent members. Set units true to alignment and level, with joints properly spaced and aligned both vertically and horizontally. Erection tolerances must be in accordance with the requirements of PCI MNL-117 and PCI MNL-122. As units are being erected, shims and wedges will be placed as required to maintain correct alignment. After final attachment, grout precast units as shown. After erection, clean and touch-up welds and abraded surfaces of steel with a zinc-rich paint. Welds must be made by a certified welder in accordance with the manufacturer's erection drawings. Finish pickup points, boxouts, inserts, and similar items to match adjacent areas after erection. Erection of precast units must be supervised and performed by workmen skilled in this type of work. Welding and the qualifications of welders must be in accordance with AWS D1.1/D1.1M.

3.5 PROTECTION OF WORK

Protect precast units against damage from subsequent operations.

3.6 DEFECTIVE WORK

Repair precast concrete units damaged during erection as soon after occurrence as possible or replaced, as directed, using approved procedures. All repairs to precast concrete units must match the adjacent surfaces in color and texture, as approved. Unless otherwise approved, repair procedures will conform to PCI MNL-117.

3.7 CONCRETE STRENGTH AT TIME OF PANEL INSTALLATION

Do not install panels until concrete has attained the minimum laboratory compressive strength at 28 calendar days specified.

3.8 INSTALLATION TOLERANCES

Install panels within the tolerances specified in PCI MNL-117.

3.9 PLACING PANELS

Supporting members, including anchorage items attached to or embedded in building structural elements, must be in place before placing panels is started.

Install panels plumb, level, in alignment, and within limits of the installation tolerances.

3.10 CONNECTIONS TO THE BUILDING FRAMING SYSTEM

Connect panels to the building framing system as indicated on the approved

shop drawings. Fix adjustable connections by locknuts or other approved means after panels have been positioned.

3.11 JOINTS AND GASKETS

Joints between panels must be the width indicated and within limits of installation tolerances.

Install gaskets in joints as indicated, continuous throughout the joint length, and compressed at least 25 percent by volume.

3.12 PROTECTION

Protect panels against staining of exposed-to-view facing and other damage until completion of the work.

3.13 INSPECTION AND ACCEPTANCE PROVISIONS

3.13.1 Evaluation of Compressive Strength Tests

Concrete quality control tests specified will be evaluated as specified.

Concrete delivered to the point of placement having a slump or total air content outside the values specified must not be used in the work.

Compressive strength tests will be considered satisfactory if the average of any group of five consecutive compressive strength tests which may be selected is in each instance equal to or greater than the 28-day design compressive strength, or if not more than one compressive strength test in 10 has a value less than 90 percent of the 28-day design compressive strength.

If the compressive strength tests fail to meet the minimum requirements specified, panels fabricated of concrete represented by such tests will be considered deficient in strength and subject to the provisions specified.

3.13.2 Dimensional Tolerances

Panels having dimensions outside the limits for fabrication tolerances will be rejected.

3.13.3 Surface Finish Requirements

Panels will be rejected for the following surface finish deficiencies:

Exposed-to-view surfaces that do not match the color, aggregate size and distribution, and texture of the approved sample

Exposed-to-view surfaces that contain defects that affect the appearance of the finish, such as cracks, spalls, honeycomb, rock pockets, or stains and discoloration of aggregate or matrix that cannot be removed by cleaning

Concealed surfaces that contain cracks in excess of 0.01 inch wide, cracks that penetrate to the reinforcement regardless of width, honeycomb, rock pockets, and spalls except minor breakage at corners and edges

3.13.4 Strength of Panels

Strength of precast concrete panels will be considered potentially deficient if the panels fail to comply with the requirements that control the strength of the panels, including the following conditions:

Failure to meet compressive strength tests

Reinforcement not conforming to the requirements specified

Concrete curing and protection of panels against extremes of temperature during curing not conforming to the requirements specified

Panels damaged during handling and erection

3.13.5 Testing Panels for Strength

When there is evidence that the strength of precast concrete panels does not meet specification requirements, cores drilled from hardened concrete for compressive strength determination must be made in accordance with ASTM C42/C42M and as follows:

Take at least three representative cores from the precast-concrete panels that are considered potentially deficient.

Test cores with the saturated surface dry.

Strength of cores will be considered satisfactory if their average is equal to or greater than 90 percent of the 28-day design compressive strength of 6 by 12 inch cylinders.

Submit test reports on the same day that tests are made. Reports must contain the project name and number, date, name of contractor, name of precast concrete Precast Components panel manufacturer, name of concrete-testing service, identification letter and number of panel or panels represented by core tests, nominal maximum size of aggregate, design compressive strength of concrete at 28 calendar days, compressive breaking strength and type of break, length of core test specimen before capping, compressive strength after correcting for length diameter ratio, direction of application of the load on the core test specimen with respect to the horizontal plane of the concrete as placed, and the moisture condition of the core test specimen at time of testing.

If the results of the core tests are unsatisfactory or if core tests are impractical to obtain, make static load tests of a panel and will be evaluated in accordance with ACI 305.1 and ACI 318.

Replace panels used for core tests or static load tests with panels that meet the requirements of this section.

3.13.6 Panels-in-Place

Panels will be rejected for any one of the following deficiencies:

Panels not conforming to the requirements for installation tolerances

Panels that are damaged during construction operations

Panels that develop surface-finish deficiencies as specified

3.14 CLEANING

Clean exposed-to-view surfaces of panels thoroughly with detergent and water; use a brush to remove foreign matter. Remove stains that remain after washing in accordance with recommendations of the panel manufacturer. Surfaces must be clean and uniform in color.

3.15 SAMPLING AND TESTING

3.15.1 Product Quality Control

3.15.1.1 Aggregate Tests

ASTM C33/C33M. Perform one test for each aggregate size, including determination of the specific gravity.

3.15.1.2 Strength Tests

ASTM C172/C172M. Provide ASTM C39/C39M and ASTM C31/C31M compression tests. Perform ASTM C143/C143M slump tests. Mold six cylinders each day or for every 20 cubic yards of concrete placed, whichever is greater. Perform strength tests using two cylinders at 7 days and two at 28 days. Cure four cylinders in the same manner as the panels and place at the point where the poorest curing conditions are offered. Moist cure two cylinders and test at 28 days.

3.15.1.3 Changes in Proportions

If, the compressive strength falls below that specified, adjust the mix proportions and water content and make necessary changes in the temperature, moisture, and curing procedures to secure the specified strength. Notify the Contracting Officer of all changes.

3.15.1.4 Strength Test Results

Evaluate compression test results at 28 days in accordance with ACI 214R using a coefficient of variation of 20 percent. Evaluate the strength of concrete by averaging the test results (two specimens) of standard cylinders tested at 28 days. Not more than 20 percent of the individual tests can have an average compressive strength less than the specified ultimate compressive strength.

3.15.2 Rejection

Panels in place may be rejected for any one of the following product defects or installation deficiencies remaining after repairs and cleaning have been accomplished. "Visible" means visible to a person with normal eyesight when viewed from a distance of 20 feet in broad daylight.

a. Nonconformance to specified tolerances.

b. Air voids (bugholes or blowholes) larger than 3/8 inch diameter.

c. Visible casting lines.

d. Visible from joints.

e. Visible irregularities.

f. Visible stains on panel surfaces.

g. Visible differences between panel and approved sample.

h. Visible non-uniformity of textures or color.

i. Visible areas of backup concrete bleeding through the facing concrete.

j. Visible foreign material embedded in the face.

k. Visible repairs.

l. Visible reinforcement shadow lines.

m. Visible cracks.

3.15.3 Field Quality Control

Perform field inspection of panel connections. Notify the Contracting Officer in writing of defective welds, bolts, nuts and washers within 7 working days of the date of inspection. All defective connections or welds are to be removed and re-welded or repaired as required by the Contracting Officer.

3.15.3.1 Welded Connection Visual Inspection

AWS D1.1/D1.1M, furnish the services of AWS-certified welding inspector for erection inspections. Welding inspector must visually inspect all welds and identify all defective welds.

-- End of Section --

SECTION 04 20 00

MASONRY
02/11

PART 1 GENERAL

1.1 REFERENCES

The publications listed below form a part of this specification to the extent referenced. The publications are referred to within the text by the basic designation only.

AMERICAN CONCRETE INSTITUTE INTERNATIONAL (ACI)

ACI 530/530.1	(2011; Errata 2011; Errata 2013) Building Code Requirements and Specification for Masonry Structures and Related Commentaries
ACI SP-66	(2004) ACI Detailing Manual

ASTM INTERNATIONAL (ASTM)

ASTM A153/A153M	(2009) Standard Specification for Zinc Coating (Hot-Dip) on Iron and Steel Hardware
ASTM A167	(2011) Standard Specification for Stainless and Heat-Resisting Chromium-Nickel Steel Plate, Sheet, and Strip
ASTM A615/A615M	(2014) Standard Specification for Deformed and Plain Carbon-Steel Bars for Concrete Reinforcement
ASTM A641/A641M	(2009a) Standard Specification for Zinc-Coated (Galvanized) Carbon Steel Wire
ASTM A82/A82M	(2007) Standard Specification for Steel Wire, Plain, for Concrete Reinforcement
ASTM B370	(2012) Standard Specification for Copper Sheet and Strip for Building Construction
ASTM B633	(2013) Standard Specification for Electrodeposited Coatings of Zinc on Iron and Steel
ASTM C1019	(2011) Standard Test Method for Sampling and Testing Grout
ASTM C1072	(2013) Standard Test Method for Measurement of Masonry Flexural Bond Strength
ASTM C1142	(1995; R 2007) Standard Specification for

	Extended Life Mortar for Unit Masonry
ASTM C129	(2011) Standard Specification for Nonloadbearing Concrete Masonry Units
ASTM C140	(2013) Standard Test Methods for Sampling and Testing Concrete Masonry Units and Related Units
ASTM C144	(2011) Standard Specification for Aggregate for Masonry Mortar
ASTM C150/C150M	(2012) Standard Specification for Portland Cement
ASTM C1670	(2015) Standard Specification for Adhered Manufactured Stone Masonry Veneer Units
ASTM C177	(2013) Standard Test Method for Steady-State Heat Flux Measurements and Thermal Transmission Properties by Means of the Guarded-Hot-Plate Apparatus
ASTM C192/C192M	(2015) Standard Practice for Making and Curing Concrete Test Specimens in the Laboratory
ASTM C207	(2006; R 2011) Standard Specification for Hydrated Lime for Masonry Purposes
ASTM C216	(2014) Facing Brick (Solid Masonry Units Made from Clay or Shale)
ASTM C270	(2012a) Standard Specification for Mortar for Unit Masonry
ASTM C39/C39M	(2015a) Standard Test Method for Compressive Strength of Cylindrical Concrete Specimens
ASTM C476	(2010) Standard Specification for Grout for Masonry
ASTM C482	(2005; R 2014) Standard Test Method for Bond Strength of Ceramic Tile to Portland Cement Paste
ASTM C494/C494M	(2013) Standard Specification for Chemical Admixtures for Concrete
ASTM C55	(2011) Concrete Brick
ASTM C62	(2013a) Building Brick (Solid Masonry Units Made from Clay or Shale)
ASTM C67	(2013a) Standard Test Methods for Sampling and Testing Brick and Structural Clay Tile
ASTM C780	(2012a) Preconstruction and Construction

	Evaluation of Mortars for Plain and Reinforced Unit Masonry
ASTM C90	(2012) Loadbearing Concrete Masonry Units
ASTM C91/C91M	(2012) Standard Specification for Masonry Cement
ASTM C94/C94M	(2014b) Standard Specification for Ready-Mixed Concrete
ASTM D1972	(1997; R 2005) Standard Practice for Generic Marking of Plastic Products
ASTM D2000	(2012) Standard Classification System for Rubber Products in Automotive Applications
ASTM D2240	(2005; R 2010) Standard Test Method for Rubber Property - Durometer Hardness
ASTM D2287	(2012) Nonrigid Vinyl Chloride Polymer and Copolymer Molding and Extrusion Compounds
ASTM E119	(2014) Standard Test Methods for Fire Tests of Building Construction and Materials

U.S. GREEN BUILDING COUNCIL (USGBC)

LEED NC	(2009) Leadership in Energy and Environmental Design(tm) New Construction Rating System

1.2 SYSTEM DESCRIPTION

1.2.1 Local/Regional Materials

Use materials or products extracted, harvested, or recovered, as well as manufactured, within a 500 mile radius from the project site, if available from a minimum of three sources. See Section 01 33 29 LEED(tm) DOCUMENTATION for cumulative total local material requirements. Masonry materials may be locally available. Submit documentation indicating distance between manufacturing facility and the project site, and distance of raw material origin from the project site. Indicate relative dollar value of local/regional materials to total dollar value of products included in the project.

1.2.2 Environmental Data

Submit manufacturer's descriptive data. Documentation indicating percentage of post-industrial and post-consumer recycled content per unit of product. Indicate relative dollar value of recycled content products to total dollar value of products included in project.

1.2.3 Plastic Identification

Verify that plastic products to be incorporated into the project are labeled in accordance with ASTM D1972. Where products are not labeled, submit product data indicating polymeric information in the Operation and

Maintenance Manual.

a. Type 1: Polyethylene Terephthalate (PET, PETE).

b. Type 2: High Density Polyethylene (HDPE).

c. Type 3: Vinyl (Polyvinyl Chloride or PVC).

d. Type 4: Low Density Polyethylene (LDPE).

e. Type 5: Polypropylene (PP).

f. Type 6: Polystyrene (PS).

g. Type 7: Other. Use of this code indicates that the package in question is made with a resin other than the six listed above, or is made of more than one resin listed above, and used in a multi-layer combination.

1.2.4 Design Requirements

1.2.4.1 Special Inspection

Perform special inspections in accordance with the design drawings.

1.2.4.2 Masonry Strength

Determine the masonry strength in accordance with ACI 530/530.1. Submit calculations and certifications of unit and mortar strength for the Unit Strength Method AND submit test reports on prisms as specified in ACI 530/530.1 and TEST REPORTS - Prism Tests. The cost of all testing shall be paid by the Contractor.

1.2.5 Additional Requirements

a. Maintain at least one spare vibrator on site at all times.

b. Provide bracing and scaffolding necessary for masonry work. Design bracing to resist wind pressure as required by local code.

1.3 SUBMITTALS

Government approval is required for submittals with a "G" designation; submittals not having a "G" designation are for Contractor Quality Control approval. Submit the following in accordance with Section 01 33 00 SUBMITTAL PROCEDURES:

SD-02 Shop Drawings

Detail Drawings; G

SD-03 Product Data

Local/Regional Materials; (LEED NC)
Environmental Data
Clay or Shale Brick; G; (LEED NC)
Cement; (LEED NC)
Cold Weather Installation
Cavity Mortar Guard Mesh; G
Manufactured Masonry Veneer; G, ID NAVFAC MIDLANT Interior Design

SD-04 Samples

Concrete Masonry Units (CMU); G
Clay or Shale Brick; G
Anchors, Ties, and Bar Positioners
Expansion-Joint Materials
Joint Reinforcement
Wall Panel Mock-up
Manufactured Masonry Veneer; G, ID; NAVFAC MIDLANT Interior Design
Pre-mixed Mortar; G,ID; NAVFAC MIDLANT Interior Design

SD-05 Design Data

Unit Strength Method; G

SD-06 Test Reports

Efflorescence Test
Field Testing of Mortar; G
Field Testing of Grout; G
Prism tests; G
Masonry Cement; G
Fire-rated CMU; G
Masonry Inspector Qualifications; G

SD-07 Certificates

Clay or Shale Brick
Concrete Brick
Concrete Masonry Units (CMU)
Anchors, Ties, and Bar Positioners
Expansion-Joint Materials
Joint Reinforcement
Masonry Cement

Admixtures for Masonry Mortar
Admixtures for Grout
Contamination

SD-08 Manufacturer's Instructions

Masonry Cement

SD-10 Operation and Maintenance Data

Plastic Identification
Take-Back Program

1.4 QUALITY ASSURANCE

1.4.1 Appearance

Blend all brick to produce a uniform appearance when installed. An observable "banding" or "layering" of colors or textures caused by improperly mixed brick is unacceptable.

1.4.2 Contamination

When using bricks containing contaminated soil, supplier shall certify that the hazardous waste is neutralized by the manufacturing process and that no additional pollutants will be released, or that the product is free from hazardous contaminants.

1.4.3 Wall Panel Mock-up

After masonry samples are approved and prior to starting masonry work, construct a Wall Panel Mock-up using each type and color of masonry required. At least 48 hours prior to constructing the mock-up submit written notification to the Contracting Officer. Sample panels shall not be built in, or as part of the structure, but shall be located where directed. Wall panel mock-up shall be L-shaped or otherwise configured to represent all of the wall elements. Panels shall be of the size necessary to demonstrate the acceptable level of workmanship for each type of masonry epresented on the project. The minimum size of a straight panel or a leg of an L-shaped panel shall be 6 feet long by 4 feet high.

1.4.3.1 Composition

Panels shall show full color range, texture, and bond pattern of the masonry work. The Contractor's method for mortar joint tooling; grouting of reinforced vertical cores, collar joints, bond beams, and lintels; positioning, securing, and lapping of reinforcing steel; positioning and lapping of joint reinforcement (including prefabricated corners); and cleaning of masonry work shall be demonstrated during the construction of the panels. Installation or application procedures for anchors, wall ties, CMU control joints, brick expansion joints, insulation, flashing, brick soldier, row lock courses and weep holes shall be shown in the sample panels. The panels shall contain a masonry bonded corner that includes a bond beam corner. Panels shall show parging and installation of electrical boxes and conduit. Panels that represent reinforced masonry shall contain a 2 by 2 foot opening placed at least 2 feet above the panel base and 2 feet away from all free edges, corners, and control joints. Required reinforcing shall be provided around this opening as well as at wall corners and control joints.

1.4.3.2 Construction Method

Where anchored veneer walls are required, demonstrate and receive approval for the method of construction; i.e., either bring up the two wythes together or separately, with the insulation and appropriate ties placed within the specified tolerances across the cavity. Temporary provisions shall be demonstrated to preclude mortar or grout droppings in the cavity and to provide a clear open air space of the dimensions shown on the drawings. Where masonry is to be grouted, demonstrate and receive approval on the method that will be used to bring up the masonry wythes; support the reinforcing bars; and grout cells, bond beams, lintels, and collar joints using the requirements specified herein. If sealer is specified to be applied to the masonry units, sealer shall be applied to the sample panels. Panels shall be built on a properly designed concrete foundation.

1.4.3.3 Usage

The completed panels shall be used as the standard of workmanship for the type of masonry represented. Masonry work shall not commence until the sample panel for that type of masonry construction has been completed and

approved. Panels shall be protected from the weather and construction operations until the masonry work has been completed and approved. After completion of the work, the sample panels, including all foundation concrete, shall become the property of the Contractor and shall be removed from the construction site.

1.4.4 Masonry Inspector Qualifications

Provide a qualified masonry inspector, approved by the Contracting Officer, to perform inspections of all masonry work. Minimum qualifications for the masonry inspector shall be 5 years of reinforced masonry inspection experience or acceptance by a State, municipality, or other governmental body having a program of examining and certifying inspectors for reinforced masonry construction. The masonry inspector shall be present during preparation of masonry prisms, sampling and placing of masonry units, placement of reinforcement (including placement of dowels in footings and foundation walls), inspection of grout space, immediately prior to closing of cleanouts, and during grouting operations. The masonry inspector shall assure compliance with the drawings and specifications. The masonry inspector shall keep a complete record of all inspections and shall submit daily written reports to the Quality Control Supervisory Representative reporting the quality of masonry construction. Submit copies of masonry inspector reports with the daily reports given to the engineering technician.

1.4.5 Detail Drawings

Submit detail drawings showing bar splice locations. Bent bars shall be identified on a bending diagram and shall be referenced and located on the drawings. Wall dimensions, bar clearances, and wall openings greater than one masonry unit in area shall be shown. No approval will be given to the shop drawings until the Contractor certifies that all openings, including those for mechanical and electrical service, are shown. If, during construction, additional masonry openings are required, the approved shop drawings shall be resubmitted with the additional openings shown along with the proposed changes. Location of these additional openings shall be clearly highlighted. The minimum scale for wall elevations shall be 1/4 inch per foot. Reinforcement bending details shall conform to the requirements of ACI SP-66. Submit drawings including plans, elevations, and details of wall reinforcement; details of reinforcing bars at corners and wall intersections; offsets; tops, bottoms, and ends of walls; control and expansion joints; lintels; and wall openings.

Submit detail drawings for manufactured masonry veneer installation.

1.5 DELIVERY, STORAGE, AND HANDLING

Materials shall be delivered, stored, handled, and protected to avoid chipping, breakage, and contact with soil or contaminating material. Store and prepare materials in already disturbed areas to minimize project site disturbance and size of project site.

1.5.1 Masonry Units

Cover and protect moisture-controlled concrete masonry units and cementitious materials from precipitation. Conform to all handling and storage requirements of ASTM C90. Mark prefabricated lintels on top sides to show either the lintel schedule number or the number and size of top and bottom bars.

1.5.2 Reinforcement, Anchors, and Ties

Steel reinforcing bars, coated anchors, ties, and joint reinforcement shall be stored above the ground. Steel reinforcing bars and uncoated ties shall be free of loose mill scale and rust.

1.5.3 Cementitious Materials, Sand and Aggregates

Cementitious and other packaged materials shall be delivered in unopened containers, plainly marked and labeled with manufacturers' names and brands. Cementitious material shall be stored in dry, weathertight enclosures or be completely covered. Cement shall be handled in a manner that will prevent the inclusion of foreign materials and damage by water or dampness. Store sand and aggregates in a manner to prevent contamination or segregation.

1.6 PROJECT/SITE CONDITIONS

Conform to ACI 530/530.1 for hot and cold weather masonry erection.

1.6.1 Hot Weather Installation

Take the following precautions if masonry is erected when the ambient air temperature is more than 99 degrees F in the shade and the relative humidity is less than 50 percent or the ambient air temperature exceeds 90 degrees F and the wind velocity is more than 8 mph. All masonry materials shall be shaded from direct sunlight; mortar beds shall be spread no more than 4 feet ahead of masonry; masonry units shall be set within one minute of spreading mortar; and after erection, masonry shall be protected from direct exposure to wind and sun for 48 hours.

1.6.2 Cold Weather Installation

Before erecting masonry when ambient temperature or mean daily air temperature falls below 40 degrees F or temperature of masonry units is below 40 degrees F, submit a written statement of proposed cold weather construction procedures for approval.

PART 2 PRODUCTS

2.1 GENERAL REQUIREMENTS

The source of materials which will affect the appearance of the finished work shall not be changed after the work has started except with Contracting Officer's approval. Submit sample of colored mortar with applicable masonry unit and color samples of three stretcher units and one unit for each type of special shape. Units shall show the full range of color and texture. Submit test reports from an approved independent laboratory. Test reports on a previously tested material shall be certified as the same as that proposed for use in this project. Submit certificates of compliance stating that the materials meet the specified requirements.

2.2 Colors and Textures

Must conform to the Camp LeJeune, Stone Bay BEAP (Base Exterior Arcitectural Plan)and be selected from manufacturers standards.

a. Submit samples of Clay or Shale Brick and Concrete Masonry Units (CMU) for the approval by the Architect of Record.

b. Brick to match the brick at building adjacent to site, P1396.

b. CMU to match the watertable at building adjacent to site, P1396.

2.3 CLAY OR SHALE BRICK

Submit brick samples as specified. Color range and texture of clay or shale brick shall be as indicated and shall conform to the approved sample. Brick shall conform to ASTM C216; Grade SW shall be used for brick in contact with earth or grade and for the first six exterior courses above grade and for all nonvertical surfaces. Grade SW or MW shall be used in other brickwork. Average dimensions of brick shall be 3-5/8 inches thick, 2-1/4 inches high, and 8 inches long (standard) or 4 inches thick, 2-2/3 inches high, and 8 inches long (nominal), subject to the tolerances specified in ASTM C62. Brick shall be tested for efflorescence. Clay or shale brick units shall be delivered factory-blended to provide a uniform appearance and color range in the completed wall. Clay units shall contain a minimum of 10 percent post-consumer recycled content, or a minimum of 40 percent post-industrial recycled content. See Section 01 33 29 LEED(tm) DOCUMENTATION for cumulative total recycled content requirements. Clay units may contain post-consumer or post-industrial recycled content.

2.4 CONCRETE BRICK

Concrete brick shall conform to ASTM C55, Grade S. Concrete brick may be used where necessary for filling out in concrete masonry unit construction. Submit samples as specified.

2.5 CONCRETE MASONRY UNITS (CMU)

Submit samples and certificates as specified. Cement shall have a low alkali content and be of one brand. Units shall contain a minimum of 10 percent post-consumer recycled content, or a minimum of 40 percent post-industrial recycled content.See Section 01 33 29 LEED(tm) DOCUMENTATION for cumulative total recycled content requirements. Units may contain post-consumer or post-industrial recycled content. Units shall be of modular dimensions and air, water, or steam cured. Surfaces of units which are to be plastered or stuccoed shall be sufficiently rough to provide bond; elsewhere, exposed surfaces of units shall be smooth and of uniform texture. Exterior concrete masonry units shall have water-repellant admixture added during manufacture.

a. Hollow Load-Bearing Units: ASTM C90, made with lightweight aggregate. Provide load-bearing units for exterior walls, foundation walls, load-bearing walls, and shear walls.

b. Hollow Non-Load-Bearing Units: ASTM C129, made with lightweight aggregate. Load-bearing units may be provided in lieu of non-load-bearing units.

c. Solid Load-Bearing Units: ASTM C90, lightweight units.

2.5.1 Kinds and Shapes

Units shall be modular in size and shall include closer, jamb, header, lintel, and bond beam units and special shapes and sizes to complete the

work as indicated. In exposed interior masonry surfaces, units having a bullnose shall be used for vertical external corners except at door, window, and louver jambs. Radius of the bullnose shall be 1 inch. Units used in exposed masonry surfaces in any one building shall have a uniform fine to medium texture and a uniform color.

2.5.1.1 Architectural Units

CMU shall have patterned face shell. Face shell pattern shall be Ground Faced. Units shall be integrally colored during manufacture andsShall be properly aligned in the completed wall.

2.5.1.2 Patterned, Decorative Screen Units

Patterned, decorative screen units shall conform to the applicable requirements of ASTM C90. Units shall have uniform through-the-wall pattern, color, and texture.

2.5.2 Fire-Rated CMU

Concrete masonry units used in fire-rated construction shown on the drawings shall be of minimum equivalent thickness for the fire rating indicated and the corresponding type of aggregates indicated in TABLE I. Units containing more than one of the aggregates listed in TABLE I will be rated on the aggregate requiring the greater minimum equivalent thickness to produce the required fire rating. Construction shall conform to ASTM E119.

TABLE I

FIRE-RATED CONCRETE MASONRY UNITS

See note (a) in Table III

	Minimum equivalent thickness in inches for fire rating of:		
Aggregate Type	4 hours	3 hours	2 hours
Pumice	4.7	4.0	3.0
Expanded slag	5.0	4.2	3.3
Expanded clay, shale, or slate	5.7	4.8	3.7
Limestone, scoria, cinders or unexpanded slag	5.9	5.0	4.0
Calcareous gravel	6.2	5.3	4.2
Siliceous gravel	6.7	5.7	4.5

Minimum equivalent thickness shall equal net volume as determined in

conformance with ASTM C140 divided by the product of the actual length and height of the face shell of the unit in inches. Where walls are to receive plaster or be faced with brick, or otherwise form an assembly; the thickness of plaster or brick or other material in the assembly will be included in determining the equivalent thickness. Submit calculation results.

2.6 Manufactured Masonry Veneer

Submit precast veneer samples and product data. Manufactured units shall consist of portland cement, lightweight aggregtates, and mineral oxide pigments, and meeting the following minimum criteria:

1. Compressive Strength: ASTM C192/C192M and ASTM C39/C39M, 5 sample average: greater than 1,800 psi (12.4MPa).

2. Shear Bond: ASTM C482: 50 psi (345kPa), minimum.

3. Freeze-Thaw Test: ASTM C67: Less than 3 percent weight loss and no disintegration.

4. Thermal Resistance: ASTM C177: 0.473 at 1.387 inches thick.

5. Weight per square foot: 2012 IBC and 2012 IRC, ASTM C1670, 15 pounds, saturated. Color range and texture veneer shall be as indicated and shall conform to the approved sample.

2.7 MORTAR FOR STRUCTURAL MASONRY

ASTM C270, Type M, with an average 28 day compressive strength of 2500psi, or Type S, with an average 28 day compressive strength of 1800psi. Test in accordance with ASTM C780. Do not use admixtures containing chlorides. When structural reinforcement is incorporated, maximum air-content shall be 12 percent in cement-lime mortar and 18 percent in masonry cement mortar.

2.8 MASONRY MORTAR

Type M mortar shall conform to ASTM C270 and shall be used for all structural masonry exposed to earth. When masonry cement ASTM C91/C91M is used the maximum air content shall be limited to 12 percent and performance equal to cement-lime mortar shall be verified. Pointing mortar in showers and kitchens shall contain ammonium stearate, or aluminum tri-stearate, or calcium stearate in an amount equal to 3 percent by weight of cement used. Cement shall have a low alkali content and be of one brand. Aggregates shall be from one source.

2.8.1 Admixtures for Masonry Mortar

In cold weather, a non-chloride based accelerating admixture may be used subject to approval. Accelerating admixture shall be non-corrosive, shall contain less than 0.2 percent chlorides, and shall conform to ASTM C494/C494M, Type C. Submit the required certifications.

2.8.2 Hydrated Lime and Alternates

Hydrated lime shall conform to ASTM C207, Type S.

2.8.3 Cement

Portland cement shall conform to ASTM C150/C150M, Type I, II, . Masonry cement shall conform to ASTM C91/C91M, Type S or M. Containers shall bear complete instructions for proportioning and mixing to obtain the required types of mortar. Verification of masonry cement performance shall be based on ASTM C780 and ASTM C1072. Incorporate to the maximum extent, without conflicting with other requirements of this section, up to 40 percent fly ash, up to 70 percent slag, up to 10 percent cenospheres, and up to 10 percent silica fume. When masonry cement is used, submit the manufacturer's printed instructions on proportions of water and aggregates and on mixing to obtain the type of mortar required. Additives shall conform to requirements in Section 03 30 00 CAST-IN-PLACE CONCRETE.

2.8.4 Sand and Water

Sand shall conform to ASTM C144. Water shall be clean, potable, and free from substances which could adversely affect the mortar.

2.9 GROUT AND READY-MIXED GROUT

Grout shall conform to ASTM C476, fine or coarse. Use grout subject to the limitations of Table III - POUR HEIGHT AND TYPE OF GROUT FOR VARIOUS GROUT SPACE DIMENSIONS. Cement used in grout shall have a low alkali content. Grout slump shall be between 8 and 10 inches. Minimum grout strength shall be 2500 psi in 28 days, as tested by ASTM C1019. Do not change proportions and do not use materials with different physical or chemical characteristics in grout for the work unless additional evidence is furnished that the grout meets the specified requirements. Ready-Mixed grout shall conform to ASTM C94/C94M.

2.9.1 Admixtures for Grout

In cold weather, a non-chloride based accelerating admixture may be used subject to approval; accelerating admixture shall be non-corrosive, shall contain less than 0.2 percent chlorides, and shall conform to ASTM C494/C494M, Type C. In general, air-entrainment, anti-freeze or chloride admixtures shall not be used except as approved by the Contracting Officer. Submit required certifications.

2.9.2 Grout Barriers

Grout barriers for vertical cores shall consist of fine mesh wire, fiberglass, or expanded metal.

2.9.3 Pre-Mixed Mortar

Pre-mixed mortar shall conform to ASTM C1142, Type RS. Submit pre-mixed mortar composition. Submit full range of color samples for selection as recommended for installation with manufactured masonry veneer.

2.10 ANCHORS, TIES, AND BAR POSITIONERS

Anchors and ties shall be fabricated without drips or crimps and shall be zinc-coated in accordance with ASTM A153/A153M, Class B-2. Steel wire used for anchors and ties shall be fabricated from steel wire conforming to ASTM A82/A82M. Wire ties or anchors in exterior walls shall conform to ASTM A641/A641M. Joint reinforcement in interior walls, and in exterior or interior walls exposed to moist environment shall conform to ASTM A641/A641M;

coordinate with paragraph JOINT REINFORCEMENT below. Anchors and ties shall be sized to provide a minimum of 5/8 inch mortar cover from either face. Submit two anchors, ties and bar positioners of each type used, as samples.

2.10.1 Wire Mesh Ties

Wire mesh for tying 4 inch thick concrete masonry unit partitions to other intersecting masonry partitions shall be 1/2 inch mesh of minimum 16 gauge steel wire. Minimum lengths shall be not less than 12 inches.

2.10.2 Wall Ties

Provide at 16 inches on center vertically and horizontally, unless noted otherwise. Provide rectangular-shaped wall ties fabricated of 3/16 inch diameter zinc-coated steel wire that are no less than 4 inches wide or provide continuous type wall ties conforming to paragraph JOINT REINFORCEMENT. Adjustable type wall ties, if approved for use, shall consist of two essentially U-shaped elements fabricated of 3/16 inch diameter zinc-coated steel wire. Adjustable ties shall be of the double pintle to eye type and shall allow a maximum of 1/2 inch eccentricity between each element of the tie. Play between pintle and eye opening shall be not more than 1/16 inch. The pintle and eye elements shall be formed so that both can be in the same plane. Extend the horizontal reinforcing pintle projection eye beyond the Rigid Board Insulation so that the brick ties can be properly attached.

2.10.3 Dovetail Anchors

Provide dovetail anchors of the flexible wire type, 3/16 inch diameter zinc-coated steel wire, triangular shaped, and attached to a 12 gauge or heavier steel dovetail section. Use these anchors for anchorage of veneer wythes or composite-wall facings extending over the face of concrete columns, beams, or walls. Fill cells within vertical planes of these anchors solid with grout for full height of walls or partitions, or solid units may be used.

2.10.4 Adjustable Anchors

Adjustable anchors shall be 3/16 inch diameter steel wire, triangular-shaped. Anchors attached to steel shall be 5/16 inch diameter steel bars placed to provide 1/16 inch play between flexible anchors and structural steel members. Spacers shall be welded to rods and columns. Equivalent welded-on steel anchor rods or shapes standard with the flexible-anchor manufacturer may be furnished when approved. Welds shall be cleaned and given one coat of zinc-rich touch up paint.

2.10.5 Bar Positioners

Bar positioners, used to prevent displacement of reinforcing bars during the course of construction, shall be factory fabricated from 9 gauge steel wire or equivalent, and coated with a hot-dip galvanized finish. Not more than one wire shall cross the cell. Telescoping bar positioner shall be manufactured from AISI 1065 spring steel and coated in accordance with ASTM B633.

2.11 JOINT REINFORCEMENT

Joint reinforcement shall be factory fabricated from steel wire conforming

to ASTM A82/A82M, welded construction. Tack welding will not be acceptable in reinforcement used for wall ties. Wire shall have zinc coating conforming to ASTM A153/A153M, Class B-2. All wires shall be a minimum of 9 gauge. Reinforcement shall be ladder type design, having one longitudinal wire in the mortar bed of each face shell for hollow units and one wire for solid units. Joint reinforcement shall be placed a minimum of 5/8 inch cover from either face. The distance between crosswires shall not exceed 16 inches. Joint reinforcement for straight runs shall be furnished in flat sections not less than 10 feet long. Joint reinforcement shall be provided with factory formed corners and intersections. If approved for use, joint reinforcement may be furnished with adjustable wall tie features. Submit one piece of each type used, including corner and wall intersection pieces, showing at least two cross wires.

2.12 REINFORCING STEEL BARS AND RODS

Reinforcing steel bars and rods shall conform to ASTM A615/A615M, Grade 60.

2.13 CONTROL JOINT KEYS

Control joint keys shall be a factory fabricated solid section of natural or synthetic rubber (or combination thereof) conforming to ASTM D2000or polyvinyl chloride conforming to ASTM D2287. The material shall be resistant to oils and solvents. The control joint key shall be provided with a solid shear section not less than 5/8 inch thick and 3/8 inch thick flanges, with a tolerance of plus or minus 1/16 inch. The control joint key shall fit neatly, but without forcing, in masonry unit jamb sash grooves. The control joint key shall be flexible at a temperature of minus 30 degrees F after five hours exposure, and shall have a durometer hardness of not less than 70 when tested in accordance with ASTM D2240.

2.14 EXPANSION-JOINT MATERIALS

Backer rod and sealant shall be adequate to accommodate joint compression equal to 50 percent of the width of the joint. The backer rod shall be compressible rod stock of polyethylene foam, polyurethane foam, butyl rubber foam, or other flexible, nonabsorptive material as recommended by the sealant manufacturer. Sealant shall conform to Section 07 92 00 JOINT SEALANTS, and shall be penetrating with a maximum volatile organic compound (VOC) content of 600 grams/liter. Submit one piece of each type of material used.

2.15 THROUGH WALL FLASHING

Provide Through Wall Flashing as specified in Section 07 60 00 FLASHING AND SHEET METAL. Provide one of the following types except that flashing indicated to terminate in reglets shall be metal or coated-metal flashing and except that the material shall be one which is not adversely affected by dampproofing material.

a. Coated-Copper Flashing: 7 ounce, electrolytic copper sheet, uniformly coated on both sides with acidproof, alkaliproof, elastic bituminous compound. Factory apply coating to a weight of not less than 6 ounces/square foot (approximately 3 ounces/square foot on each side).

b. Copper or Stainless Steel Flashing: Copper, ASTM B370, minimum 16 ounce weight; stainless steel, ASTM A167, Type 301, 302, 304, or 316, 0.015 inch thick, No. 2D finish. Provide with factory-fabricated deformations that mechanically bond flashing against horizontal

movement in all directions. Deformations shall consist of dimples, diagonal corrugations, or a combination of dimples and transverse corrugations.

c. Reinforced Membrane Flashing: Polyester film core with a reinforcing fiberglass scrim bonded to one side. The membrane shall be impervious to moisture, flexible, and not affected by caustic alkalis. The material, after being exposed for not less than 1/2 hour to a temperature of 32 degrees F, shall show no cracking when, at that temperature, it is bent 180 degrees over a 1/16 inch diameter mandrel and then bent at the same point over the same size mandrel in the opposite direction 360 degrees.

2.16 WEEP HOLE VENTILATORS

Weep hole ventilators shall be prefabricated aluminum, plastic or wood blocking sized to form the proper size opening in head joints. Provide aluminum and plastic inserts with grill or screen-type openings designed to allow the passage of moisture from cavities and to prevent the entrance or insects. Ventilators shall be sized to match modular construction with a standard 3/8 inch mortar joint.

2.17 CAVITY MORTAR GUARD MESH

Provide a continuous cavity mortar guard mesh to prevent mortar droppings from clogging the thru-wall flashing as shown in the architectural drawings. Mesh shall be made from HDPE; width of mesh shall match the width of the cavity; locate mesh immediately above the thru-wall flashing. The mortar guard mesh shall have an alternating 'toothed' top edge to prevent accumulated mortar from clogging the mesh.

2.18 Cement Backer Board

Provide cement backer board for interior installation of manufactured masonry veneer as recommended by product manufacturer.

PART 3 EXECUTION

3.1 PREPARATION

Prior to start of work, the masonry inspector shall verify the applicable conditions as set forth in ACI 530/530.1, inspection and the special inspection requirements noted in the design drawings.

3.1.1 Protection

Ice or snow formed on the masonry bed shall be thawed by the application of heat. Heat shall be applied carefully until the top surface of the masonry is dry to the touch. Sections of masonry deemed frozen and damaged shall be removed before continuing construction of those sections.

a. Air Temperature 40 to 32 Degrees F. Sand or mixing water shall be heated to produce mortar temperatures between 40 and 120 degrees F

b. Air Temperature 32 to 25 Degrees F. Sand and mixing water shall be heated to produce mortar temperatures between 40 and 120 degrees F. Temperature of mortar on boards shall be maintained above freezing.

c. Air Temperature 25 to 20 Degrees F. Sand and mixing water shall be heated to provide mortar temperatures between 40 and 120 degrees F. Temperature of mortar on boards shall be maintained above freezing. Sources of heat shall be used on both sides of walls under construction. Windbreaks shall be employed when wind is in excess of 15 mph.

d. Air Temperature 20 Degrees F and below. Sand and mixing water shall be heated to provide mortar temperatures between 40 and 120 degrees F. Enclosure and auxiliary heat shall be provided to maintain air temperature above 32 degrees F. Temperature of units when laid shall not be less than 20 degrees F.

3.1.2 Completed Masonry and Masonry Not Being Worked On

a. Mean daily air temperature 40 to 32 degrees F. Masonry shall be protected from rain or snow for 24 hours by covering with weather-resistive membrane.

b. Mean daily air temperature 32 to 25 degrees F. Masonry shall be completely covered with weather-resistant membrane for 24 hours.

c. Mean Daily Air Temperature 25 to 20 degrees F. Masonry shall be completely covered with insulating blankets or equally protected for 24 hours.

d. Mean Daily Temperature 20 degrees F and Below. Masonry temperature shall be maintained above 32 degrees F for 24 hours by enclosure and supplementary heat, by electric heating blankets, infrared heat lamps, or other approved methods.

3.1.3 Stains

Protect exposed surfaces from mortar and other stains. When mortar joints are tooled, remove mortar from exposed surfaces with fiber brushes and wooden paddles. Protect base of walls from splash stains by covering adjacent ground with sand, sawdust, or polyethylene.

3.1.4 Loads

Do not apply uniform loads for at least 12 hours or concentrated loads for at least 72 hours after masonry is constructed. Provide temporary bracing as required.

3.1.5 Surfaces

Clean surfaces on which masonry is to be placed of laitance, dust, dirt, oil, organic matter, or other foreign materials and slightly roughen to provide a surface texture with a depth of at least 1/8 inch. Sandblast, if necessary, to remove laitance from pores and to expose the aggregate.

3.2 LAYING MASONRY UNITS

a. Coordinate masonry work with the work of other trades to accommodate built-in items and to avoid cutting and patching. Masonry units shall be laid in running bond pattern. Facing courses shall be level with back-up courses, unless the use of adjustable ties has been approved in which case the tolerances shall be plus or minus 1/2 inch. Each unit

shall be adjusted to its final position while mortar is still soft and plastic.

b. Units that have been disturbed after the mortar has stiffened shall be removed, cleaned, and relaid with fresh mortar. Air spaces, cavities, chases, expansion joints, and spaces to be grouted shall be kept free from mortar and other debris. Units used in exposed masonry surfaces shall be selected from those having the least amount of chipped edges or other imperfections detracting from the appearance of the finished work. Vertical joints shall be kept plumb.

c. Units being laid and surfaces to receive units shall be free of water film and frost. Solid units shall be laid in a nonfurrowed full bed of mortar. Mortar for veneer wythes shall be beveled and sloped toward the center of the wythe from the cavity side. Units shall be shoved into place so that the vertical joints are tight. Vertical joints of brick and the vertical face shells of concrete masonry units, except where indicated at control, expansion, and isolation joints, shall be completely filled with mortar. Means shall be provided to prevent mortar from dropping into the space below.

3.2.1 Forms and Shores

Provide bracing and scaffolding as required. Design bracing to resist wind pressure as required by local codes. Forms and shores shall be sufficiently rigid to prevent deflections which may result in cracking or other damage to supported masonry and sufficiently tight to prevent leakage of mortar and grout. Supporting forms and shores shall not be removed in less than 10 days.

3.2.2 Reinforced Concrete Masonry Units Walls

Where vertical reinforcement occurs, fill cores solid with grout. Lay units in such a manner as to preserve the unobstructed vertical continuity of cores to be filled. Embed the adjacent webs in mortar to prevent leakage of grout. Remove mortar fins protruding from joints before placing grout. Minimum clear dimensions of vertical cores shall be 2 by 3 inches. Position reinforcing accurately as indicated before placing grout. As masonry work progresses, secure vertical reinforcing in place at vertical intervals not to exceed 160 bar diameters. Use puddling rod or vibrator to consolidate the grout. Minimum clear distance between masonry and vertical reinforcement shall be not less than 1/2 inch. Unless indicated or specified otherwise, form splices by lapping bars not less than 48 bar diameters and wire tying them together.

3.2.3 Concrete Masonry Units

Units in piers, pilasters, columns, starting courses on footings, solid foundation walls, lintels, and beams, and where cells are to be filled with grout shall be full bedded in mortar under both face shells and webs. Other units shall be full bedded under both face shells. Head joints shall be filled solidly with mortar for a distance in from the face of the unit not less than the thickness of the face shell. Foundation walls below grade shall be grouted solid. Jamb units shall be of the shapes and sizes to conform with wall units. Solid units may be incorporated in the masonry work where necessary to fill out at corners, gable slopes, and elsewhere as approved. Double walls shall be stiffened at wall-mounted plumbing fixtures by use of strap anchors, two above each fixture and two below each fixture, located to avoid pipe runs, and extending from center to center of

the double wall. Walls and partitions shall be adequately reinforced for support of wall-hung plumbing fixtures when chair carriers are not specified.

3.2.4 Clay or Shale Brick Units

Lay brick facing with the better face exposed. Lay brick in running bond with each course bonded at corners, unless otherwise indicated. Lay molded brick with the frog side down. Brick that is cored, recessed, or has other deformations may be used in sills, treads, soldier courses, except where deformations will be exposed to view.

3.2.4.1 Wetting of Units

Wetting of clay, shale brick, or hollow brick units having an initial rate of absorption of more than 1 gram per minute per square inch of bed surface shall be in conformance with ASTM C67. The method of wetting shall ensure that each unit is nearly saturated but surface dry when laid. Test clay or shale brick daily on the job, prior to laying, as follows: Using a wax pencil, draw a circle the size of a quarter on five randomly selected bricks. Apply 20 drops of water with a medicine dropper to the surface within the circle on each brick. If the average time that the water is completely absorbed in the five bricks is less than 1-1/2 minutes, wet bricks represented by the five bricks tested.

3.2.4.2 Solid Units

Completely fill bed, head, and collar joints with mortar.

3.2.4.3 Hollow Units

Lay hollow units as specified for concrete masonry units.

3.2.4.4 Cavity Walls

Provide a continuous cavity as indicated. Securely tie the two wythes together with horizontal joint reinforcement. Bevel mortar beds away from cavity to prevent projection into cavity when bricks are shoved in place. Keep cavities clear and clean of mortar droppings. At the bottom of cavity walls, in the course immediately above the through-wall flashing, temporarily omit one brick every 4 feet. With a hose and clean water, wash all mortar droppings and debris out of the cavity through the temporary openings at least twice each day masonry is laid, and more often when required to keep the cavities clean. Fill in the openings with bricks and mortar after the wall is complete and the cavity has been inspected and found clean. Provide weep holes of open head joints spaced 24 inches o.c. wherever the cavity is interrupted at base of wall and vertical obstructions (e.g. lintels). Cavity face of interior wythe shall be dampproofed in accordance with Section 07 11 13 BITUMINOUS DAMPPROOFING.

3.2.4.5 Brick Veneer

Provide a continuous cavity as indicated. Care shall be provided to avoid damaging the moisture barrier. Damaged moisture barrier and flashing shall be repaired or replaced before brick veneer is installed. Means shall be provided to keep cavities clean and clear of mortar droppings.

3.2.5 Tolerances

Lay masonry plumb, true to line, with courses level. Keep bond pattern plumb throughout. Square corners unless noted otherwise. Except for walls constructed of prefaced concrete masonry units, lay masonry within the following tolerances (plus or minus unless otherwise noted):

TABLE II TOLERANCES	
Variation from the plumb in the lines and surfaces of columns, walls and arises	
In adjacent masonry units	1/8 inch
In 10 feet	1/4 inch
In 20 feet	3/8 inch
In 40 feet or more	1/2 inch
Variations from the plumb for external corners, expansion joints, and other conspicuous lines	
In 20 feet	1/4 inch
In 40 feet or more	1/2 inch
Variations from the level for exposed lintels, sills, parapets, horizontal grooves, and other conspicuous lines	
In 20 feet	1/4 inch
In 40 feet or more	1/2 inch
Variation from level for bed joints and top surfaces of bearing walls	
In 10 feet	1/4 inch
In 40 feet or more	1/2 inch
Variations from horizontal lines	
In 10 feet	1/4 inch
In 20 feet	3/8 inch
In 40 feet or more	1/2 inch
Variations in cross sectional dimensions of columns and in thickness of walls	
Minus	1/4 inch
Plus	1/2 inch

3.2.6 Cutting and Fitting

Full units of the proper size shall be used wherever possible, in lieu of cut units. Cutting and fitting, including that required to accommodate the

work of others, shall be done by masonry mechanics using power masonry saws. Concrete masonry units may be wet or dry cut. Wet cut units, before being placed in the work, shall be dried to the same surface-dry appearance as uncut units being laid in the wall. Cut edges shall be clean, true and sharp. Openings in the masonry shall be made carefully so that wall plates, cover plates or escutcheons required by the installation will completely conceal the openings and will have bottoms parallel with the masonry bed joints. Reinforced masonry lintels shall be provided above openings over 12 inches wide for pipes, ducts, cable trays, and other wall penetrations, unless steel sleeves are used.

3.2.7 Jointing

Joints shall be tooled when the mortar is thumbprint hard. Horizontal joints shall be tooled last. Joints shall be brushed to remove all loose and excess mortar. Mortar joints shall be finished as follows:

3.2.7.1 Flush Joints

Joints in concealed masonry surfaces and joints at electrical outlet boxes in wet areas shall be flush cut. Flush cut joints shall be made by cutting off the mortar flush with the face of the wall. Joints in unparged masonry walls below grade shall be pointed tight. Flush joints for architectural units, such as fluted units, shall completely fill both the head and bed joints.

3.2.7.2 Tooled Joints

Joints in exposed exterior and interior masonry surfaces shall be tooled slightly concave . Joints shall be tooled with a jointer slightly larger than the joint width so that complete contact is made along the edges of the unit. Tooling shall be performed so that the mortar is compressed and the joint surface is sealed. Jointer of sufficient length shall be used to obtain a straight and true mortar joint.

3.2.7.3 Door and Window Frame Joints

On the exposed interior side of exterior frames, joints between frames and abutting masonry walls shall be raked to a depth of 3/8 inch. On the exterior side of exterior frames, joints between frames and abutting masonry walls shall be raked to a depth of 3/8 inch.

3.2.8 Joint Widths

Joint widths shall be as follows:

3.2.8.1 Concrete Masonry Units

Concrete masonry units shall have 3/8 inch joints, except for prefaced concrete masonry units.

3.2.8.2 Brick

Brick joint widths shall be the difference between the actual and nominal dimensions of the brick in either height or length. Brick expansion joint widths shall be as shown.

3.2.9 Embedded Items

Fill spaces around built-in items with mortar. Point openings around flush-mount electrical outlet boxes in wet locations with mortar. Embed anchors, ties, wall plugs, accessories, flashing, pipe sleeves and other items required to be built-in as the masonry work progresses. Fully embed anchors, ties and joint reinforcement in the mortar. Fill cells receiving anchor bolts and cells of the first course below bearing plates with grout.

3.2.10 Unfinished Work

Step back unfinished work for joining with new work. Toothing may be resorted to only when specifically approved. Remove loose mortar and thoroughly clean the exposed joints before laying new work.

3.2.11 Masonry Wall Intersections

Masonry bond each course at corners and intersections, unless noted otherwise.

3.2.12 Partitions

Partitions shall be continuous from floor to underside of floor or roof deck, unless noted otherwise. Openings in firewalls around joists or other structural members shall be filled. An isolation joint shall be placed in the intersection between partitions and structural or exterior walls unless noted otherwise. Interior partitions having 4 inch nominal thick units shall be tied to intersecting partitions of 4 inch units, 5 inches into partitions of 6 inch units, and 7 inches into partitions of 8 inch or thicker units. Cells within vertical plane of ties shall be filled solid with grout for full height of partition or solid masonry units may be used. Interior partitions having masonry walls over 4 inches thick shall be tied together with joint reinforcement. Partitions containing joint reinforcement shall be provided with prefabricated pieces at corners and intersections or partitions.

3.3 ANCHORED VENEER CONSTRUCTION

Completely separate the inner and outer wythes by a continuous airspace as indicated. Lay up both the inner and the outer wythes together except when adjustable joint reinforcement assemblies are approved for use. When both wythes are not brought up together, through-wall flashings shall be protected from damage until they are fully enclosed in the wall. The airspace between the wythes shall be kept clear and free of mortar droppings by temporary wood strips laid on the wall ties and carefully lifted out before placing the next row of ties. A coarse gravel or drainage material shall be placed behind the weep holes in the cavity to a minimum depth of 4 inches of coarse aggregate or 10 inches of drainage material to keep mortar droppings from plugging the weep holes.

3.4 WEEP HOLES

Wherever through-wall flashing occurs, provide weep holes to drain flashing to exterior at acceptable locations as indicated on drawings. Weep holes shall be open head joints. at 24 inches o.c. Weep holes shall be provided not more than 24 inches on centers in mortar joints of the exterior wythe above wall flashing, over foundations, bond beams, and any other horizontal interruptions of the cavity. Weep holes shall be perfectly horizontal or slightly canted downward to encourage water drainage outward and not

inward. Weep holes shall be constructed using weep hole ventilators. Weep holes shall be kept free of mortar and other obstructions.

3.5 MORTAR MIX

Mix mortar in a mechanically operated mortar mixer for at least 3 minutes, but not more than 5 minutes. Measure ingredients for mortar by volume. Ingredients not in containers, such as sand, shall be accurately measured by the use of measuring boxes. Mix water with the dry ingredients in sufficient amount to provide a workable mixture which will adhere to the vertical surfaces of masonry units. Retemper mortar that has stiffened because of loss of water through evaporation by adding water to restore the proper consistency and workability. Discard mortar that has reached its initial set or that has not been used within 2.5 hours after mixing.

3.6 REINFORCING STEEL

Clean reinforcement of loose, flaky rust, scale, grease, mortar, grout, or other coating which might destroy or reduce its bond prior to placing grout. Bars with kinks or bends not shown on the drawings shall not be used. Reinforcement shall be placed prior to grouting. Unless otherwise indicated, vertical wall reinforcement shall extend to within 2 inches of tops of walls and shall have a 90 degree standard hook at the top.

3.6.1 Positioning Bars

Vertical bars shall be accurately placed within the cells at the positions indicated on the drawings. A minimum clearance of 1/2 inch shall be maintained between the bars and masonry units. Minimum clearance between parallel bars shall be one diameter of the reinforcement. Vertical reinforcing may be held in place using bar positioners located near the ends of each bar and at intermediate intervals of not more than 192 diameters of the reinforcement. Column and pilaster ties shall be wired in position around the vertical steel. Ties shall be in contact with the vertical reinforcement and shall not be placed in horizontal bed joints.

3.6.2 Splices

Bars shall be lapped a minimum of 48 diameters of the reinforcement. Welded or mechanical connections shall develop at least 125 percent of the specified yield strength of the reinforcement.

3.7 JOINT REINFORCEMENT INSTALLATION

Joint reinforcement shall be installed at 16 inches on center unless noted otherwise. Reinforcement shall be lapped not less than 6 inches. Prefabricated sections shall be installed at corners and wall intersections. The longitudinal wires of joint reinforcement shall be placed to provide not less than 5/8 inch cover to either face of the unit.

3.8 PLACING GROUT

Fill all cells with grout. Grout not in place within 1-1/2 hours after water is first added to the batch shall be discarded. Sufficient time shall be allowed between grout lifts to preclude displacement or cracking of face shells of masonry units. If blowouts, flowouts, misalignment, or cracking of face shells should occur during construction, the wall shall be torn down and rebuilt.

3.8.1 Vertical Grout Barriers for Fully Grouted Walls

Provide grout barriers not more than 30 feet apart, or as required, to limit the horizontal flow of grout for each pour.

3.8.2 Grout Holes and Cleanouts

3.8.2.1 Grout Holes

Provide grouting holes in slabs, spandrel beams, and other in-place overhead construction. Locate holes over vertical reinforcing bars or as required to facilitate grout fill in bond beams. Provide additional openings spaced not more than 16 inches on centers where grouting of all hollow unit masonry is indicated. Openings shall not be less than 4 inches in diameter or 3 by 4 inches in horizontal dimensions. Upon completion of grouting operations, plug and finish grouting holes to match surrounding surfaces.

3.8.2.2 Cleanouts for Hollow Unit Masonry Construction

Provide cleanout holes at the bottom of every pour in cores containing vertical reinforcement when the height of the grout pour exceeds 4 feet. Where all cells are to be grouted, construct cleanout courses using bond beam units in an inverted position to permit cleaning of all cells. Provide cleanout holes at a maximum spacing of 32 inches where all cells are to be filled with grout. Establish a new series of cleanouts if grouting operations are stopped for more than 4 hours. Cleanouts shall not be less than 3 by 4 inch openings cut from one face shell. Manufacturer's standard cutout units may be used at the Contractor's option. Cleanout holes shall not be closed until masonry work, reinforcement, and final cleaning of the grout spaces have been completed and inspected. For walls which will be exposed to view, close cleanout holes in an approved manner to match surrounding masonry.

3.8.3 Grouting Equipment

3.8.3.1 Grout Pumps

Pumping through aluminum tubes will not be permitted. Operate pumps to produce a continuous stream of grout without air pockets, segregation, or contamination. Upon completion of each day's pumping, remove waste materials and debris from the equipment, and dispose of outside the masonry.

3.8.3.2 Vibrators

Internal vibrators shall maintain a speed of not less than 5,000 impulses per minute when submerged in the grout. Maintain at least one spare vibrator at the site at all times. Apply vibrators at uniformly spaced points not further apart than the visible effectiveness of the machine. Limit duration of vibration to time necessary to produce satisfactory consolidation without causing segregation.

3.8.4 Grout Placement

Lay masonry to the top of a pour before placing grout. Do no place grout in two-wythe solid unit masonry cavity until mortar joints have set for at least 3 days during hot weather and 5 days during cold damp weather. Grout shall not be placed in hollow unit masonry until mortar joints have set for at least 24 hours. Grout shall be placed using a hand bucket, concrete

hopper, or grout pump to completely fill the grout spaces without segregation of the aggregates. Vibrators shall not be inserted into lower pours that are in a semi-solidified state. The height of grout pours and type of grout used shall be limited by the dimensions of grout spaces as indicated in Table III. Low-lift grout methods may be used on pours up to and including 4 feet in height. High-lift grout methods shall be used on pours exceeding 4 feet in height.

3.8.4.1 Low-Lift Method

Grout shall be placed at a rate that will not cause displacement of the masonry due to hydrostatic pressure of the grout. Mortar protruding more than 1/2 inch into the grout space shall be removed before beginning the grouting operation. Grout pours 12 inches or less in height shall be consolidated by mechanical vibration or by puddling. Grout pours over 12 inches in height shall be consolidated by mechanical vibration and reconsolidated by mechanical vibration after initial water loss and settlement has occurred. Vibrators shall not be inserted into lower pours that are in a semi-solidified state. Low-lift grout shall be used subject to the limitations of Table III.

3.8.4.2 High-Lift Method

Mortar droppings shall be cleaned from the bottom of the grout space and from reinforcing steel. Mortar protruding more than 1/4 inch into the grout space shall be removed by dislodging the projections with a rod or stick as the work progresses. Reinforcing, bolts, and embedded connections shall be rigidly held in position before grouting is started. CMU units shall not be pre-wetted. Grout, from the mixer to the point of deposit in the grout space shall be placed as rapidly as practical by pumping and placing methods which will prevent segregation of the mix and cause a minimum of grout splatter on reinforcing and masonry surfaces not being immediately encased in the grout lift. The individual lifts of grout shall be limited to 4 feet in height. The first lift of grout shall be placed to a uniform height within the pour section and vibrated thoroughly to fill all voids. This first vibration shall follow immediately behind the pouring of the grout using an approved mechanical vibrator. After a waiting period sufficient to permit the grout to become plastic, but before it has taken any set, the succeeding lift shall be poured and vibrated 12 to 18 inches into the preceding lift. If the placing of the succeeding lift is going to be delayed beyond the period of workability of the preceding, each lift shall be reconsolidated by reworking with a second vibrator as soon as the grout has taken its settlement shrinkage. The waiting, pouring, and reconsolidation steps shall be repeated until the top of the pour is reached. The top lift shall be reconsolidated after the required waiting period. The high-lift grouting of any section of wall between vertical grout barriers shall be completed to the top of a pour in one working day unless a new series of cleanout holes is established and the resulting horizontal construction joint cleaned. High-lift grout shall be used subject to the limitations in Table III.

TABLE III
POUR HEIGHT AND TYPE OF GROUT FOR VARIOUS GROUT SPACE DIMENSIONS

			Minimum Dimensions of the Total Clear Areas Within Grout Spaces and Cells in inches (1,2)	
Maximum Grout Pour Height feet (4)	Grout Type	Grouting Procedure	Multiwythe Masonry (3)	Hollow-unit Masonry
1	Fine	Low Lift	3/4	1-1/2 x 2
4	Fine	Low Lift	2	2 x 3
8	Fine	High Lift	2	2 x 3
12	Fine	High Lift	2-1/2	2-1/2 x 3
24	Fine	High Lift	3	3 x 3
1	Coarse	Low Lift	1-1/2	1-1/2 x 3
4	Coarse	Low Lift	2	2-1/2 x 3
8	Coarse	High Lift	2	3 x 3
12	Coarse	High Lift	2-1/2	3 x 3
24	Coarse	High Lift	3	3 x 4

Notes:

(1) The actual grout space or cell dimension shall be larger than the sum of the following items:

(a) The required minimum dimensions of total clear areas given in the table above;

(b) The width of any mortar projections within the space;

(c) The horizontal projections of the diameters of the horizontal reinforcing bars within a cross section of the grout space or cell.

(2) The minimum dimensions of the total clear areas shall be made up of one or more open areas, with at least one area being 3/4 inch or greater in width.

(3) For grouting spaces between masonry wythes.

(4) Where only cells of hollow masonry units containing reinforcement are grouted, the maximum height of the pour shall not exceed the distance between horizontal bond beams.

3.9 BOND BEAMS

Bond beams shall be filled with grout and reinforced with two #5 bars unless otherwise indicated on the drawings. Grout barriers shall be installed under bond beam units to retain the grout as required.

Reinforcement shall be continuous, including around corners, except through control joints or expansion joints, unless otherwise indicated on the drawings. Where splices are required for continuity, reinforcement shall be lapped 48 bar diameters. A minimum clearance of 1/2 inch shall be maintained between reinforcement and interior faces of units.

3.10 CONTROL JOINTS

Control joints shall be provided as indicated and shall be constructed by using sash jamb units with control joint key in accordance with the details shown on the drawings. Sash jamb units shall have a 3/4 by 3/4 inch groove near the center at end of each unit. The vertical mortar joint at control joint locations shall be continuous, including through all bond beams. This shall be accomplished by utilizing half blocks in alternating courses on each side of the joint. The control joint key shall be interrupted in courses containing continuous bond beam steel. In single wythe exterior masonry walls, the exterior control joints shall be raked to a depth of 3/4 inch; backer rod and sealant shall be installed in accordance with Section 07 92 00 JOINT SEALANTS. Exposed interior control joints shall be raked to a depth of 1/4 inch. Concealed control joints shall be flush cut.

3.11 SHELF ANGLES

Adjust shelf angles as required to keep the masonry level and at the proper elevation. Shelf angles shall be galvanized and provided in sections not longer than 10 feet and installed with a 1/4 inch gap between sections. Shelf angles shall be mitered and welded at building corners with each angle not shorter than 4 feet, unless limited by wall configuration.

3.12 LINTELS

3.13 ANCHORAGE TO CONCRETE AND STRUCTURAL STEEL

3.13.1 Anchorage to Structural Steel

Masonry shall be anchored to vertical structural steel framing with adjustable steel wire anchors spaced not over 16 inches on centers vertically, and if applicable, not over 24 inches on centers horizontally.

3.14 PARGING

The outside face of below-grade exterior concrete-masonry unit walls enclosing usable rooms and spaces, except crawl spaces, shall be parged with type S mortar. Parging shall not be less than 1/2 inch thick troweled to a smooth dense surface so as to provide a continuous unbroken shield from top of footings to a line 6 inches below adjacent finish grade, unless otherwise indicated. Parging shall be coved at junction of wall and footing. Parging shall be damp-cured for 48 hours or more before backfilling. Parging shall be protected from freezing temperatures until hardened.

3.15 POINTING AND CLEANING

After mortar joints have attained their initial set, but prior to hardening, completely remove mortar and grout daubs or splashings from masonry-unit surfaces that will be exposed or painted. Before completion of the work, defects in joints of masonry to be exposed or painted shall be raked out as necessary, filled with mortar, and tooled to match existing joints. Immediately after grout work is completed, scum and stains which

have percolated through the masonry work shall be removed using a high pressure stream of water and a stiff bristled brush. Masonry surfaces shall not be cleaned, other than removing excess surface mortar, until mortar in joints has hardened. Masonry surfaces shall be left clean, free of mortar daubs, dirt, stain, and discoloration, including scum from cleaning operations, and with tight mortar joints throughout. Metal tools and metal brushes shall not be used for cleaning.

3.15.1 Dry-Brushing

a. Exposed concrete masonry unit

b. Exposed concrete brick surfaces

c. shall be dry-brushed at the end of each day's work and after any required pointing, using stiff-fiber bristled brushes.

3.15.2 Clay or Shale Brick Surfaces

Clean exposed clay or shale brick masonry surfaces as necessary to obtain surfaces free of stain, dirt, mortar and grout daubs, efflorescence, and discoloration or scum from cleaning operations. After cleaning, examine the sample panel of similar material for discoloration or stain as a result of cleaning. If the sample panel is discolored or stained, change the method of cleaning to ensure that the masonry surfaces in the structure will not be adversely affected. The exposed masonry surfaces shall be water-soaked and then cleaned with a solution proportioned 1/2 cup trisodium phosphate and 1/2 cup laundry detergent to one gallon of water or cleaned with a proprietary masonry cleaning agent specifically recommended for the color and texture by the clay products manufacturer. The solution shall be applied with stiff fiber brushes, followed immediately by thorough rinsing with clean water. Proprietary cleaning agents shall be used in conformance with the cleaning product manufacturer's printed recommendations. Efflorescence shall be removed in conformance with the brick manufacturer's recommendations.

3.16 BEARING PLATES

Set bearing plates for beams, joists, joist girders and similar structural members to the proper line and elevation with damp-pack bedding mortar, except where non-shrink grout is indicated. Bedding mortar and non-shrink grout shall be as specified in Section 03 30 00 CAST-IN-PLACE CONCRETE.

3.17 PROTECTION

Protect facing materials against staining. Cover top of walls with nonstaining waterproof covering or membrane when work is not in progress. Covering of the top of the unfinished walls shall continue until the wall is waterproofed with a complete roof or parapet system. Covering shall extend a minimum of 2 feet down on each side of the wall and shall be held securely in place. Before starting or resuming, top surface of masonry in place shall be cleaned of loose mortar and foreign material.

3.17.1 Manufactured Masonry Veneer

Install as per manufacturer's recommendations for interior wall installation over wood studs using cement backer board, mortar setting bed and mortar joints.

3.18 WASTE MANAGEMENT

Manage waste according to the Waste Management Plan and as follows. Minimize water used to wash mixing equipment. Use trigger operated spray nozzles for water hoses.

3.18.1 Separate and Recycle Waste

Place materials defined as hazardous or toxic waste in designated containers. Fold up metal banding, flatten, and place in designated area for recycling. Collect wood packing shims and pallets and place in designated area. Use leftover mixed mortar as cavity fill at grade where lower strength mortar meets the requirements for bulk fill. Separate masonry waste and place in designated area for use as structural fill. Separate selected masonry waste and excess for landscape uses, either whole or crushed as ground cover.

3.18.2 Take-Back Program

Collect information from manufacturer for take-back program options. Set aside masonry units, full and partial scrap packaging to be returned to manufacturer for recycling into new product. When such a service is not available, local recyclers shall be sought after to reclaim the materials. Submit documentation that includes contact information, summary of procedures, and the limitations and conditions applicable to the project. Indicate manufacturer's commitment to reclaim materials for recycling and/or reuse.

3.19 TEST REPORTS

3.19.1 Field Testing of Mortar

Take at least three specimens of mortar each day. Spread a layer of mortar 1/2 to 5/8 inch thick on the masonry units and allowed to stand for one minute. Prepare and test the specimens for compressive strength in accordance with ASTM C780. Submit test results.

3.19.2 Field Testing of Grout

Field sampling and testing of grout shall be in accordance with the applicable provisions of ASTM C1019. A minimum of three specimens of grout per day shall be sampled and tested. Submit test results.

3.19.3 Efflorescence Test

Test brick, which will be exposed to weathering, for efflorescence. Schedule tests far enough in advance of starting masonry work to permit retesting if necessary. Sampling and testing shall conform to the applicable provisions of ASTM C67. Units meeting the definition of "effloresced" will be subject to rejection. Submit test results.

3.19.4 Prism Tests

Perform at least one prism test sample for each 5,000 square feet of wall but not less than three such samples shall be made for any building. Three prisms will be used in each sample. Prisms shall be tested in accordance with ACI 530/530.1. Seven-day tests may be used provided the relationship between the 7- and 28-day strengths of the masonry is established by the tests of the materials used. Compressive strength shall not be less than

2000 psi at 28 days. If the compressive strength of any prism falls below the specified value by more than 500 psi, steps shall be taken to assure that the load-carrying capacity of the structure is not jeopardized. If the likelihood of low-strength masonry is confirmed and computations indicate that the load-carrying capacity may have been significantly reduced, tests of cores drilled, or prisms sawed, from the area in question may be required. In such case, three specimens shall be taken for each prism test more than 500 psi below the specified value. Masonry in the area in question shall be considered structurally adequate if the average compressive strength of three specimens is equal to at least 85 percent of the specified value, and if the compressive strength of no single specimen is less than 75 percent of the specified value. Additional testing of specimens extracted from locations represented by erratic core or prism strength test results will be permitted. Submit test results.

-- End of Section --

THIS PAGE HAS BEEN INTENTIONALLY LEFT BLANK

SECTION 05 12 00

STRUCTURAL STEEL
05/14

PART 1 GENERAL

1.1 REFERENCES

The publications listed below form a part of this specification to the extent referenced. The publications are referred to within the text by the basic designation only.

AMERICAN INSTITUTE OF STEEL CONSTRUCTION (AISC)

AISC 303	(2010) Code of Standard Practice for Steel Buildings and Bridges
AISC 325	(2011) Steel Construction Manual
AISC 326	(2009) Detailing for Steel Construction
AISC 341	(2010) Seismic Provisions for Structural Steel Buildings
AISC 360	(2010) Specification for Structural Steel Buildings
AISC DESIGN GUIDE 10	(1997) Erection Bracing of Low-Rise Structural Steel Buildings

AMERICAN WELDING SOCIETY (AWS)

AWS A2.4	(2012) Standard Symbols for Welding, Brazing and Nondestructive Examination
AWS D1.1/D1.1M	(2010; Errata 2011) Structural Welding Code - Steel

ASME INTERNATIONAL (ASME)

ASME B46.1	(2009) Surface Texture, Surface Roughness, Waviness and Lay

ASTM INTERNATIONAL (ASTM)

ASTM A143/A143M	(2007) Standard Practice for Safeguarding Against Embrittlement of Hot-Dip Galvanized Structural Steel Products and Procedure for Detecting Embrittlement
ASTM A153/A153M	(2009) Standard Specification for Zinc Coating (Hot-Dip) on Iron and Steel Hardware
ASTM A307	(2012) Standard Specification for Carbon Steel Bolts and Studs, 60 000 PSI Tensile Strength

ASTM A325	(2010; E 2013) Standard Specification for Structural Bolts, Steel, Heat Treated, 120/105 ksi Minimum Tensile Strength
ASTM A36/A36M	(2014) Standard Specification for Carbon Structural Steel
ASTM A490	(2012) Standard Specification for Structural Bolts, Alloy Steel, Heat Treated, 150 ksi Minimum Tensile Strength
ASTM A500/A500M	(2013) Standard Specification for Cold-Formed Welded and Seamless Carbon Steel Structural Tubing in Rounds and Shapes
ASTM A53/A53M	(2012) Standard Specification for Pipe, Steel, Black and Hot-Dipped, Zinc-Coated, Welded and Seamless
ASTM A563	(2007a; R2014) Standard Specification for Carbon and Alloy Steel Nuts
ASTM A563M	(2007; R 2013) Standard Specification for Carbon and Alloy Steel Nuts (Metric)
ASTM A6/A6M	(2013a) Standard Specification for General Requirements for Rolled Structural Steel Bars, Plates, Shapes, and Sheet Piling
ASTM A780/A780M	(2009) Standard Practice for Repair of Damaged and Uncoated Areas of Hot-Dip Galvanized Coatings
ASTM A992/A992M	(2011) Standard Specification for Structural Steel Shapes
ASTM C1107/C1107M	(2013) Standard Specification for Packaged Dry, Hydraulic-Cement Grout (Nonshrink)
ASTM C827/C827M	(2010) Change in Height at Early Ages of Cylindrical Specimens from Cementitious Mixtures
ASTM F1554	(2007a; E 2011) Standard Specification for Anchor Bolts, Steel, 36, 55, and 105-ksi Yield Strength
ASTM F2329	(2013) Zinc Coating, Hot-Dip, Requirements for Application to Carbon and Alloy Steel Bolts, Screws, Washers, Nuts, and Special Threaded Fasteners
ASTM F436	(2011) Hardened Steel Washers
ASTM F844	(2007a; R 2013) Washers, Steel, Plain (Flat), Unhardened for General Use

ASTM F959	(2013) Compressible-Washer-Type Direct Tension Indicators for Use with Structural Fasteners

THE SOCIETY FOR PROTECTIVE COATINGS (SSPC)

SSPC PA 1	(2000; E 2004) Shop, Field, and Maintenance Painting of Steel
SSPC Paint 20	(2002; E 2004) Zinc-Rich Primers (Type I, Inorganic, and Type II, Organic)
SSPC Paint 29	(2002; E 2004) Zinc Dust Sacrificial Primer, Performance-Based
SSPC SP 3	(1982; E 2004) Power Tool Cleaning
SSPC SP 6/NACE No.3	(2007) Commercial Blast Cleaning

U.S. DEPARTMENT OF DEFENSE (DOD)

UFC 3-301-01	(2013) Structural Engineering
UFC 3-310-04	(2013) Seismic Design for Buildings

1.2 SUBMITTALS

Government approval is required for submittals with a "G" designation; submittals not having a "G" designation are for Contractor Quality Control approval. Submit the following in accordance with Section 01 33 00 SUBMITTAL PROCEDURES:

SD-01 Preconstruction Submittals

Erection Drawings; G

SD-02 Shop Drawings

Fabrication drawings including description of connections; G

SD-03 Product Data

Shop primer

Welding electrodes and rods

Non-Shrink Grout

SD-06 Test Reports

Class B coating

Bolts, nuts, and washers

Bolt Testing Reports

Embrittlement Test Reports

SD-07 Certificates

Steel

Bolts, nuts, and washers

Galvanizing

AISC Fabrication Plant Quality Certification

AISC Erector Quality Certification

Welding procedures and qualifications

Welding electrodes and rods

1.3 AISC QUALITY CERTIFICATION

Work must be fabricated in an AISC Certified Fabrication Plant, Category Std . Submit AISC fabrication plant quality certification.

Work must be erected by an AISC Certified Erector, Category CSE. Submit AISC erector quality certification.

1.4 SEISMIC PROVISIONS

The structural steel system must be provided in accordance with AISC 341, Chapter J as amended by UFC 3-310-04.

1.5 QUALITY ASSURANCE

1.5.1 Preconstruction Submittals

1.5.1.1 Erection Drawings

Submit for record purposes. Indicate the sequence of erection, temporary shoring and bracing. The erection drawings must conform to AISC 303. Erection drawings must be reviewed, stamped and sealed by a registered professional engineer.

1.5.2 Fabrication Drawing Requirements

Submit fabrication drawings for approval prior to fabrication. Prepare in accordance with AISC 326 and AISC 325. Fabrication drawings must not be reproductions of contract drawings. Sign and seal fabrication drawings by a registered professional engineer. Include complete information for the fabrication and erection of the structure's components, including the location, type, and size of bolts, welds, member sizes and lengths, connection details, blocks, copes, and cuts. Use AWS A2.4 standard welding symbols. Shoring and temporary bracing must be designed and sealed by a registered professional engineer and submitted for record purposes, with calculations, as part of the drawings. Any deviations from the details shown on the contract drawings must be clearly highlighted on the fabrication drawings. Explain the reasons for any deviations from the contract drawings.

1.5.3 Certifications

1.5.3.1 Welding Procedures and Qualifications

Prior to welding, submit certification for each welder stating the type of welding and positions qualified for, the code and procedure qualified under, date qualified, and the firm and individual certifying the qualification tests. If the qualification date of the welding operator is more than one-year old, the welding operator's qualification certificate must be accompanied by a current certificate by the welder attesting to the fact that he has been engaged in welding since the date of certification, with no break in welding service greater than 6 months.

Conform to all requirements specified in AWS D1.1/D1.1M.

PART 2 PRODUCTS

2.1 SYSTEM DESCRIPTION

Provide the structural steel system, including shop primer and galvanizing, complete and ready for use. Structural steel systems including design, materials, installation, workmanship, fabrication, assembly, erection, inspection, quality control, and testing must be provided in accordance with AISC 360, AISC 341, UFC 3-301-01 and UFC 3-310-04 except as modified in this contract.

2.2 STEEL

2.2.1 Structural Steel

Wide flange and WT shapes, ASTM A992/A992M. Angles, Channels and Plates, ASTM A36/A36M.

2.2.2 Structural Steel Tubing

ASTM A500/A500M, Grade B.

2.2.3 Steel Pipe

ASTM A53/A53M, Type E or S, Grade B, weight class STD (Standard) .

2.3 BOLTS, NUTS, AND WASHERS

Submit the certified manufacturer's mill reports which clearly show the applicable ASTM mechanical and chemical requirements together with the actual test results for the supplied fasteners.

2.3.1 Common Grade Bolts

2.3.1.1 Bolts

ASTM A307, Grade A. The bolt heads and the nuts of the supplied fasteners must be marked with the manufacturer's identification mark, the strength grade and type specified by ASTM specifications.

2.3.1.2 Nuts

ASTM A563M, Grade A, heavy hex style.

2.3.1.3 Washers

ASTM F844.

2.3.2 High-Strength Bolts

2.3.2.1 Bolts

ASTM A325, Type 1.

2.3.2.2 Nuts

ASTM A563, Grade and Style as specified in the applicable ASTM bolt standard.

2.3.2.3 Washers

ASTM F436, plain carbon steel.

2.3.3 Foundation Anchorage

2.3.3.1 Anchor Rods

ASTM F1554 Gr 36 , Class 1A .

2.3.3.2 Anchor Nuts

ASTM A563, Grade A, hex style.

2.3.3.3 Anchor Washers

ASTM F844.

2.3.3.4 Anchor Plate Washers

ASTM A36/A36M

2.4 STRUCTURAL STEEL ACCESSORIES

2.4.1 Welding Electrodes and Rods

AWS D1.1/D1.1M.

2.4.2 Non-Shrink Grout

ASTM C1107/C1107M, with no ASTM C827/C827M shrinkage. Grout must be nonmetallic.

2.5 GALVANIZING

ASTM F2329 for threaded parts or ASTM A153/A153M for structural steel members, as applicable, unless specified otherwise galvanize after fabrication where practicable.

2.6 FABRICATION

Fabrication must be in accordance with the applicable provisions of AISC 325. Fabrication and assembly must be done in the shop to the greatest extent possible. Punch, subpunch and ream, or drill bolt holes perpendicular to

the surface of the member.

Compression joints depending on contact bearing must have a surface roughness not in excess of 500 micro inch as determined by ASME B46.1, and ends must be square within the tolerances for milled ends specified in ASTM A6/A6M.

Shop splices of members between field splices will be permitted only where indicated on the Contract Drawings. Splices not indicated require the approval of the Contracting Officer.

2.6.1 Markings

Prior to erection, members must be identified by a painted erection mark. Connecting parts assembled in the shop for reaming holes in field connections must be match marked with scratch and notch marks. Do not locate erection markings on areas to be welded. Do not locate match markings in areas that will decrease member strength or cause stress concentrations. Affix embossed tags to hot-dipped galvanized members.

2.6.2 Shop Primer

SSPC Paint 20 or SSPC Paint 29, (zinc rich primer). Shop prime structural steel, except as modified herein, in accordance with SSPC PA 1. Do not prime steel surfaces embedded in concrete, galvanized surfaces, or surfaces within 0.5 inch of the toe of the welds prior to welding (except surfaces on which metal decking is to be welded). If flash rusting occurs, re-clean the surface prior to application of primer. Apply primer to a minimum dry film thickness of 2.0 mil.

Slip critical surfaces must be primed with a Class B coating in accordance with AISC 325. Submit test report for Class B coating.

Prior to assembly, prime surfaces which will be concealed or inaccessible after assembly. Do not apply primer in foggy or rainy weather; when the ambient temperature is below 45 degrees F or over 95 degrees F; or when the primer may be exposed to temperatures below 40 degrees F within 48 hours after application, unless approved otherwise by the Contracting Officer. Repair damaged primed surfaces with an additional coat of primer.

2.6.2.1 Cleaning

SSPC SP 6/NACE No.3, except steel exposed in spaces above ceilings, attic spaces, furred spaces, and chases that will be hidden to view in finished construction may be cleaned to SSPC SP 3 when recommended by the shop primer manufacturer. Maintain steel surfaces free from rust, dirt, oil, grease, and other contaminants through final assembly.

2.6.3 Surface Finishes

ASME B46.1 maximum surface roughness of 125 for pin, pinholes, and sliding bearings, unless indicated otherwise.

2.7 DRAINAGE HOLES

Adequate drainage holes must be drilled to eliminate water traps. Hole diameter must be 1/2 inch and location must be indicated on the detail drawings. Hole size and location must not affect the structural integrity.

PART 3 EXECUTION

3.1 ERECTION

a. Erection of structural steel, except as indicated in item b. below, must be in accordance with the applicable provisions of AISC 325.

b. For low-rise structural steel buildings (60 feet tall or less and a maximum of 2 stories), the structure must be erected in accordance with AISC DESIGN GUIDE 10.

After final positioning of steel members, provide full bearing under base plates and bearing plates using nonshrink grout. Place nonshrink grout in accordance with the manufacturer's instructions.

3.1.1 STORAGE

Material must be stored out of contact with the ground in such manner and location as will minimize deterioration.

3.2 CONNECTIONS

Except as modified in this section, connections not detailed must be designed in accordance with AISC 360. Build connections into existing work. Do not tighten anchor bolts set in concrete with impact torque wrenches. Holes must not be cut or enlarged by burning. Bolts, nuts, and washers must be clean of dirt and rust, and lubricated immediately prior to installation.

3.2.1 Common Grade Bolts

ASTM A307 bolts must be tightened to a "snug tight" fit. "Snug tight" is the tightness that exists when plies in a joint are in firm contact. If firm contact of joint plies cannot be obtained with a few impacts of an impact wrench, or the full effort of a man using a spud wrench, contact the Contracting Officer for further instructions.

3.2.2 High-Strength Bolts

Provide direct tension indicator washers in all ASTM A325 and ASTM A490 bolted connections. Bolts must be installed in connection holes and initially brought to a snug tight fit. After the initial tightening procedure, bolts must then be fully tensioned, progressing from the most rigid part of a connection to the free edges.

3.2.2.1 Installation of Direct Tension Indicator Washers (DTIW)

Where possible, the DTIW must be installed under the bolt head and the nut must be tightened. If the DTIW is installed adjacent to the turned element, provide a flat washer between the DTIW and nut when the nut is turned for tightening, and between the DTIW and bolt head when the bolt head is turned for tightening. In addition to the LIW, provide flat washers under both the bolt head and nut when ASTM A490 bolts are used.

3.3 GAS CUTTING

Use of gas-cutting torch in the field for correcting fabrication errors will not be permitted on any major member in the structural framing. Use of a gas cutting torch will be permitted on minor members not under stress

only after approval has been obtained from the Contracting Officer.

3.4 WELDING

Welding must be in accordance with AWS D1.1/D1.1M. Grind exposed welds smooth as indicated. Provide AWS D1.1/D1.1M qualified welders, welding operators, and tackers.

Develop and submit the Welding Procedure Specifications (WPS) for all welding, including welding done using prequalified procedures. Prequalified procedures may be submitted for information only; however, procedures that are not prequalified must be submitted for approval.

3.4.1 Removal of Temporary Welds, Run-Off Plates, and Backing Strips

Remove only from finished areas.

3.5 SHOP PRIMER REPAIR

Repair shop primer in accordance with the paint manufacturer's recommendation for surfaces damaged by handling, transporting, cutting, welding, or bolting.

3.5.1 Field Priming

Steel exposed to the weather, or located in building areas without HVAC for control of relative humidity must be field primed. After erection, the field bolt heads and nuts, field welds, and any abrasions in the shop coat must be cleaned and primed with paint of the same quality as that used for the shop coat.

3.6 GALVANIZING REPAIR

Repair damage to galvanized coatings using ASTM A780/A780M zinc rich paint for galvanizing damaged by handling, transporting, cutting, welding, or bolting. Do not heat surfaces to which repair paint has been applied.

3.7 FIELD QUALITY CONTROL

Perform field tests, and provide labor, equipment, and incidentals required for testing, except that electric power for field tests will be furnished as set forth in Division 1. The Contracting Officer must be notified in writing of defective welds, bolts, nuts, and washers within 7 working days of the date of the inspection.

3.7.1 Welds

3.7.1.1 Visual Inspection

AWS D1.1/D1.1M. Furnish the services of AWS-certified welding inspectors for fabrication and erection inspection and testing and verification inspections.

Inspect proper preparation, size, gaging location, and acceptability of welds; identification marking; operation and current characteristics of welding sets in use.

3.7.2 Direct Tension Indicator Washers

3.7.2.1 Direct Tension Indicator Washer Compression

Direct tension indicator washers must be tested in place to verify that they have been compressed sufficiently to provide the 0.015 inch gap when the direct tension indicator washer is placed under the bolt head and the nut is tightened, and to provide the 0.005 inch gap when the direct tension indicator washer is placed under the turned element, as required by ASTM F959.

3.7.2.2 Direct Tension Indicator Gaps

In addition to the above testing, an independent testing agency as approved by the Contracting Officer, must test in place the direct tension indicator gaps on 20 percent of the installed direct tension indicator washers to verify that the ASTM F959 direct tension indicator gaps have been achieved. If more than 10 percent of the direct tension indicators tested have not been compressed sufficiently to provide the average gaps required by ASTM F959, then all in place direct tension indicator washers shall be tested to verify that the ASTM F959 direct tension indicator gaps have been achieved. Test locations must be selected by the Contracting Officer.

3.7.3 High-Strength Bolts

3.7.3.1 Testing Bolt, Nut, and Washer Assemblies

Test a minimum of 3 bolt, nut, and washer assemblies from each mill certificate batch in a tension measuring device at the job site prior to the beginning of bolting start-up. Demonstrate that the bolts and nuts, when used together, can develop tension not less than the provisions specified in AISC 360, depending on bolt size and grade. The bolt tension must be developed by tightening the nut. A representative of the manufacturer or supplier must be present to ensure that the fasteners are properly used, and to demonstrate that the fastener assemblies supplied satisfy the specified requirements. Submit bolt testing reports.

3.7.3.2 Inspection

Inspection procedures must be in accordance with AISC 360. Confirm and report to the Contracting Officer that the materials meet the project specification and that they are properly stored. Confirm that the faying surfaces have been properly prepared before the connections are assembled. Observe the specified job site testing and calibration, and confirm that the procedure to be used provides the required tension. Monitor the work to ensure the testing procedures are routinely followed on joints that are specified to be fully tensioned.

Inspect calibration of torque wrenches for high-strength bolts.

3.7.3.3 Testing

The Government has the option to perform nondestructive tests on 5 percent of the installed bolts to verify compliance with pre-load bolt tension requirements. Provide the required access for the Government to perform the tests. The nondestructive testing will be done in-place using an ultrasonic measuring device or any other device capable of determining in-place pre-load bolt tension. The test locations must be selected by the Contracting Officer. If more than 10 percent of the bolts tested contain

defects identified by testing, then all bolts used from the batch from which the tested bolts were taken, must be tested at the Contractor's expense. Retest new bolts after installation at the Contractor's expense.

3.7.4 Testing for Embrittlement

ASTM A143/A143M for steel products hot-dip galvanized after fabrication. Submit embrittlement test reports.

-- End of Section --

THIS PAGE HAS BEEN INTENTIONALLY LEFT BLANK

SECTION 05 21 16

LONGSPAN STEEL JOIST FRAMING
08/09

PART 1 GENERAL

1.1 REFERENCES

The publications listed below form a part of this specification to the extent referenced. The publications are referred to within the text by the basic designation only.

AMERICAN WELDING SOCIETY (AWS)

AWS B2.1/B2.1M	(2009) Specification for Welding Procedure and Performance Qualification
AWS D1.1/D1.1M	(2010; Errata 2011) Structural Welding Code - Steel

STEEL JOIST INSTITUTE (SJI)

SJI LOAD TABLES	(2005; Errata 1 2006; Errata 2 2007; Errata 3 2007) 42nd Edition Catalog of Standard Specifications Load Tables and Weight Tables for Steel Joists and Joist Girders
SJI TD 10	(2003) Technical Digest No. 10 - Design of Fire Resistive Assemblies with Steel Joists
SJI TD 8	(2008) Technical Digest No. 8 - Welding Of Open-Web Steel Joists And Joist Girders; 2nd Edition
SJI TD 9	(2008) Technical Digest No. 9 - Handling and Erection of Steel Joists and Joist Girders; 3rd Edition

THE SOCIETY FOR PROTECTIVE COATINGS (SSPC)

SSPC Paint 15	(1999; E 2004) Steel Joist Shop Primer

U.S. NATIONAL ARCHIVES AND RECORDS ADMINISTRATION (NARA)

29 CFR 1910.1200	Hazard Communication
29 CFR 1926	Safety and Health Regulations for Construction
29 CFR 1926.757	Steel Erection; Open Web Steel Joists

1.2 SYSTEM DESCRIPTION

1.2.1 General Requirements

Designate Longspan Steel Joists on the drawings in accordance with the standard designations of the Steel Joist Institute. Joists of other standard designations or joists with properties other than those shown may be substituted for the joists designated provided the structural properties are equal to or greater than those of the joists shown and provided all other specified requirements are met. Erect joist framing conforming to 29 CFR 1926.757. Secure all joist bridging and anchoring in place prior to the application of any construction loads. Distribute temporary loads so that joist capacity is not exceeded. Do not apply loads to bridging.

1.3 SUBMITTALS

Government approval is required for submittals with a "G" designation; submittals not having a "G" designation are for Contractor Quality Control approval. Submit the following in accordance with Section 01 33 00 SUBMITTAL PROCEDURES:

SD-01 Preconstruction Submittals

Welder qualification
Material Safety Data Sheet (MSDS) in accordance with 29 CFR 1910.1200

SD-02 Shop Drawings

Longspan Steel Joist Framing; G

SD-06 Test Reports

Erection inspection
Welding inspections

SD-07 Certificates

Accessories
Certification of Compliance

1.4 QUALITY ASSURANCE

Perform all work in compliance with the requirements set forth in 29 CFR 1926.

1.4.1 Drawing Requirements

Submit drawings for longspan steel joist framing including fabrication and erection details, specifications for shop painting, and identification markings of joists . Show joist type and size, layout in plan, and erection details including methods of anchoring, framing at openings, type and spacing of bridging, requirements for field welding, and details of accessories as applicable.

1.4.2 Certification of Compliance

Prior to construction commencement, submit Material Safety Data Sheet in accordance with 29 CFR 1910.1200 for longspan steel joists , and

certification for welder qualification, compliance with AWS B2.1/B2.1M, welding operation, and tacker, stating the type of welding and positions qualified for, the code and procedure qualified under, date qualified, and the firm and individual certifying the qualification tests. Submit certification of compliance for the following:

b. SJI TD 8
c. SJI TD 9
d. SJI TD 10
e. 29 CFR 1926
f. 29 CFR 1926.757

1.5 DELIVERY, STORAGE, AND HANDLING

Handle, transport, and store joists in a manner to prevent damage affecting their structural integrity. Store all items off the ground in a well drained location protected from the weather and easily accessible for inspection and handling.

PART 2 PRODUCTS

2.1 LONGSPAN STEEL JOISTS

Provide longspan steel joists conforming to SJI LOAD TABLES, LH-Series. Joists designated LH shall be designed to support the loads given in the applicable standard load tables of SJI LOAD TABLES.

2.2 ACCESSORIES AND FITTINGS

Provide accessories and fittings, including end supports and bridging, in accordance with the standard specifications under which the members were designed.

2.3 SHOP PAINTING

Longspan Joists and accessories shall be shop painted with a rust-inhibiting primer paint. For joists which require finish painting under Section 09 90 00 PAINTS AND COATINGS, the primer paint shall conform to SSPC Paint 15.

PART 3 EXECUTION

3.1 ERECTION

Install longspan joists in conformance with SJI LOAD TABLES for the joist series indicated, and the requirements of 29 CFR 1926 and 29 CFR 1926.757. Handle and set joists avoiding damage to the members.. Remove damaged joists from the site, except when field repair is approved and such repairs are satisfactorily made in accordance with the manufacturer's recommendations. All welding shall conform to AWS B2.1/B2.1M and AWS D1.1/D1.1M.

3.2 PAINTING

3.2.1 Touch-Up Painting

After erection of joists , touch-up connections and areas of abraded shop coat with paint of the same type used for the shop coat.

3.2.2 Field Painting

Paint joists requiring a finish coat in conformance with the requirements of Section 09 90 00 PAINTS AND COATINGS.

3.3 VISUAL INSPECTIONS

Perform visual inspection according to AWS D1.1/D1.1M, Section 6. Perform erection inspection and field welding inspections with AWS certified welding inspectors. Welding inspectors shall visually inspect and mark welds.

-- End of Section --

SECTION 05 21 19

OPEN WEB STEEL JOIST FRAMING
07/07

PART 1 GENERAL

1.1 REFERENCES

The publications listed below form a part of this specification to the extent referenced. The publications are referred to within the text by the basic designation only.

AMERICAN WELDING SOCIETY (AWS)

AWS B2.1/B2.1M	(2009) Specification for Welding Procedure and Performance Qualification
AWS D1.1/D1.1M	(2010; Errata 2011) Structural Welding Code - Steel

STEEL JOIST INSTITUTE (SJI)

SJI LOAD TABLES	(2005; Errata 1 2006; Errata 2 2007; Errata 3 2007) 42nd Edition Catalog of Standard Specifications Load Tables and Weight Tables for Steel Joists and Joist Girders
SJI MANUAL	(2009) 80 Years of Open Web Steel Joist Construction
SJI TD 10	(2003) Technical Digest No. 10 - Design of Fire Resistive Assemblies with Steel Joists
SJI TD 8	(2008) Technical Digest No. 8 - Welding Of Open-Web Steel Joists And Joist Girders; 2nd Edition
SJI TD 9	(2008) Technical Digest No. 9 - Handling and Erection of Steel Joists and Joist Girders; 3rd Edition

THE SOCIETY FOR PROTECTIVE COATINGS (SSPC)

SSPC Paint 15	(1999; E 2004) Steel Joist Shop Primer

U.S. NATIONAL ARCHIVES AND RECORDS ADMINISTRATION (NARA)

29 CFR 1910.1200	Hazard Communication
29 CFR 1926	Safety and Health Regulations for Construction
29 CFR 1926.757	Steel Erection; Open Web Steel Joists

1.2 SUBMITTALS

Government approval is required for submittals with a "G" designation; submittals not having a "G" designation are for Contractor Quality Control approval. Submit the following in accordance with Section 01 33 00 SUBMITTAL PROCEDURES:

SD-01 Preconstruction Submittals

Welder qualification

Material Safety Data Sheet (MSDS) per OSHA 29 CFR 1910.1200

SD-02 Shop Drawings

Steel joist framing; G

SD-06 Test Reports

Erection inspection

Welding inspections

SD-07 Certificates

Accessories

Certification of Compliance

1.3 REGULATORY REQUIREMENT

All joist girder framing must conform to 29 CFR 1926.757. Secure all joist bridging and anchoring in place prior to the application of any construction loads. Distribute temporary loads so that joist capacity is not exceeded. Do not apply loads to bridging.

1.4 DELIVERY AND STORAGE

Handle, transport, and store joists in a manner to prevent damage affecting their structural integrity. Store all items off the ground in a well drained location protected from the weather and easily accessible for inspection and handling.

1.5 QUALITY ASSURANCE

All work must comply with the requirements set forth in 29 CFR 1926.

1.5.1 Drawing Requirements

Submit steel joist framing drawings. Show joist type and size, layout in plan, and erection details including methods of anchoring, framing at openings, type and spacing of bridging, requirements for field welding, and details of accessories as applicable.

1.5.2 Certification of Compliance

Prior to construction commencement, submit Material Safety Data Sheetper 29 CFR 1910.1200 for steel joists , and certification for welder qualification, compliance with AWS B2.1/B2.1M, welding operation, and

tacker, stating the type of welding and positions qualified for, the code and procedure qualified under, date qualified, and the firm and individual certifying the qualification tests.

Submit certification of compliance for the following:
SJI MANUAL
SJI TD 8
SJI TD 9
SJI TD 10
29 CFR 1926
29 CFR 1926.757

PART 2 PRODUCTS

2.1 JOISTS AND ACCESSORIES

Provide design data from SJI LOAD TABLES for the joist series indicated.

2.2 PAINTING

2.2.1 Shop Painting

Clean and prime joists in accordance with SSPC Paint 15.

PART 3 EXECUTION

3.1 INSTALLATION

3.1.1 Handling and Erection

Conform to SJI LOAD TABLES for the joist series indicated.

3.1.2 Welding

All welding must conform to AWS B2.1/B2.1M and AWS D1.1/D1.1M.

3.2 PAINTING

3.2.1 Touch-Up Painting

After erection of joists , touch-up connections and areas of abraded shop coat with paint of the same type used for the shop coat.

3.3 VISUAL INSPECTIONS

3.3.1 Erection Inspection

AWS D1.1/D1.1M, Section 6. Perform erection inspection and field welding inspections with AWS certified welding inspectors. Welding inspectors must visually inspect and mark welds.

-- End of Section --

THIS PAGE HAS BEEN INTENTIONALLY LEFT BLANK

SECTION 05 30 00

STEEL DECKS
11/11

PART 1 GENERAL

1.1 REFERENCES

The publications listed below form a part of this specification to the extent referenced. The publications are referred to within the text by the basic designation only.

AMERICAN IRON AND STEEL INSTITUTE (AISI)

AISI D100	(1991; R 2008) Cold-Formed Steel Design Manual
AISI SG03-3	(2002; Suppl 2001-2004; R 2008) Cold-Formed Steel Design Manual Set

AMERICAN WELDING SOCIETY (AWS)

AWS D1.1/D1.1M	(2010; Errata 2011) Structural Welding Code - Steel
AWS D1.3/D1.3M	(2008; Errata 2008) Structural Welding Code - Sheet Steel

ASTM INTERNATIONAL (ASTM)

ASTM A1008/A1008M	(2015) Standard Specification for Steel, Sheet, Cold-Rolled, Carbon, Structural, High-Strength Low-Alloy and High-Strength Low-Alloy with Improved Formability, Solution Hardened, and Bake Hardened
ASTM A123/A123M	(2013) Standard Specification for Zinc (Hot-Dip Galvanized) Coatings on Iron and Steel Products
ASTM A36/A36M	(2014) Standard Specification for Carbon Structural Steel
ASTM A653/A653M	(2015) Standard Specification for Steel Sheet, Zinc-Coated (Galvanized) or Zinc-Iron Alloy-Coated (Galvannealed) by the Hot-Dip Process
ASTM A780/A780M	(2009) Standard Practice for Repair of Damaged and Uncoated Areas of Hot-Dip Galvanized Coatings
ASTM A792/A792M	(2010) Standard Specification for Steel Sheet, 55% Aluminum-Zinc Alloy-Coated by the Hot-Dip Process

FM GLOBAL (FM)

FM APP GUIDE	(updated on-line) Approval Guide http://www.approvalguide.com/
FM DS 1-28	(2002) Design Wind Loads

STEEL DECK INSTITUTE (SDI)

SDI DDMO3	(2004; Errata 2006; Add 2006) Diaphragm Design Manual; 3rd Edition
SDI DDP	(1987; R 2000) Deck Damage and Penetrations
SDI MOC2	(2006) Manual of Construction with Steel Deck

THE SOCIETY FOR PROTECTIVE COATINGS (SSPC)

SSPC Paint 20	(2002; E 2004) Zinc-Rich Primers (Type I, Inorganic, and Type II, Organic)

U.S. DEPARTMENT OF DEFENSE (DOD)

UFC 3-301-01	(2013) Structural Engineering

UNDERWRITERS LABORATORIES (UL)

UL 209	(2011) Cellular Metal Floor Raceways and Fittings
UL 580	(2006; Reprint Oct 2013) Tests for Uplift Resistance of Roof Assemblies
UL Bld Mat Dir	(2012) Building Materials Directory

1.2 SUBMITTALS

Government approval is required for submittals with a "G" designation; submittals not having a "G" designation are for Contractor Quality Control approval. Submit the following in accordance with Section 01 33 00 SUBMITTAL PROCEDURES:

SD-02 Shop Drawings

Fabrication Drawings

Cant Strips

Ridge and Valley Plates

Metal Closure Strips

SD-03 Product Data

Accessories

Galvanizing Repair Paint

Joint Sealant Material

Mechanical Fasteners

Powder-Actuated Tool Operator

Repair Paint

Welder Qualifications

Welding Equipment

Welding Rods and Accessories

SD-07 Certificates

Welding Procedures

Fire Safety

Wind Storm Resistance

1.3 QUALITY ASSURANCE

1.3.1 Certification of Powder-Actuated Tool Operator

Manufacturer's certificate attesting that the operators are authorized to use the low velocity powder-actuated tool.

1.3.2 Qualifications for Welding Work

Follows Welding Procedures in accordance with AWS D1.1/D1.1M. Test specimens shall be made in the presence of Contracting Officer and shall be tested by an approved testing laboratory at the Contractor's expense.

Submit qualified Welder Qualifications in accordance with AWS D1.1/D1.1M, or under an equivalent approved qualification test. Perform tests on test pieces in positions and with clearances equivalent to those actually encountered. If a test weld fails to meet requirements, perform an immediate retest of two test welds until each test weld passes. Failure in the immediate retest will require the welder be retested after further practice or training, performing a complete set of test welds.

Submit manufacturer's catalog data for Welding Equipment and Welding Rods and Accessories.

1.3.3 Regulatory Requirements

1.3.3.1 Fire Safety

Test roof deck as a part of a roof deck construction assembly of the type used for this project, listing as fire classified in the UL Bld Mat Dir, or listing as Class I construction in the FM APP GUIDE, and so labeled.

1.3.3.2 Wind Storm Resistance

Provide roof construction assembly capable of withstanding an uplift pressure of 90 pounds per square foot when tested in accordance with the uplift pressure test described in the FM DS 1-28 or as described in UL 580

and in general compliance with UFC 3-301-01.

1.3.4 Fabrication Drawings

Show type and location of units, location and sequence of connections, bearing on supports, methods of anchoring, attachment of accessories, adjusting plate details, size and location of holes to be cut and reinforcement to be provided, the manufacturer's erection instructions and other pertinent details.

1.4 DELIVERY, STORAGE, AND HANDLING

Deliver deck units to the site in a dry and undamaged condition. Store and handle steel deck in a manner to protect it from corrosion, deformation, and other types of damage. Do not use decking for storage or as working platform until units have been fastened into position. Exercise care not to damage material or overload decking during construction. The maximum uniform distributed storage load must not exceed the design live load. Stack decking on platforms or pallets and cover with weathertight ventilated covering. Elevate one end during storage to provide drainage. Maintain deck finish at all times to prevent formation of rust. Repair deck finish using touch-up paint. Replace damaged material.

1.5 DESIGN REQUIREMENTS FOR ROOF DECKS

1.5.1 Properties of Sections

Properties of metal roof deck sections must comply with engineering design width as limited by the provisions of AISI D100.

1.5.2 Allowable Loads

Indicate total uniform dead and live load for detailing purposes.

PART 2 PRODUCTS

2.1 MATERIALS

2.1.1 Steel Sheet

Flat rolled carbon steel sheets of structural quality, thickness not less than indicated inch before coating, meeting the requirements of AISI SG03-3, except as modified herein.

2.1.2 Steel Coating

ASTM A653/A653M designation G60 galvanized, or ASTM A792/A792M designation AZ55, aluminum-zinc alloy. Apply coating to both sides of sheet. Conform to UL 209 for coating on decking provided as wire raceways.

2.1.3 Mixes

2.1.3.1 Galvanizing Repair Paint for Floor Decks

Provide a high-zinc-dust content paint for regalvanizing welds in galvanized steel conforming to ASTM A780/A780M.

2.1.4 Galvanized Steel Angles for Roof Decks

Provide hot-rolled carbon steel angles conforming to ASTM A36/A36M, merchant quality, Grade Designation SAE/AISI 1023 or SAE/AISI 1025, and hot-dip galvanized in accordance with ASTM A123/A123M.

2.1.5 Joint Sealant Material for Roof Decks

Provide a nonskinning, gun-grade, bulk compound material as recommended by the manufacturer.

2.1.6 Galvanizing Repair Paint for Roof Decks

Provide a high zinc-dust content paint for regalvanizing welds in galvanized steel and shall conform to ASTM A780/A780M.

2.2 ACCESSORIES

Provide accessories of same material as deck, unless specified otherwise. Provide manufacturer's standard type accessories, as specified.

2.2.1 Adjusting Plates

Provide adjusting plates, or segments of deck units, of same thickness and configuration as deck units in locations too narrow to accommodate full size units. Provide factory cut plates of predetermined size where possible.

2.2.2 End Closures

Fabricated of sheet metal by the deck manufacturer. Provide end closures minimum 0.028 inch thick to close open ends at end walls, eaves, and openings through deck.

2.2.3 Partition Closures

Provide closures for closing voids above interior walls and partitions that are perpendicular to the direction of the configurations. Provide rubber, plastic, or sheet steel closures above typical partitions. Provide sheet steel closures above fire-resistant interior walls and partitions located on both sides of wall or partition.

2.2.4 Closure Plates for Composite Deck

Support and retain concrete at each floor level. Provide edge closures at all edges of the slab of sufficient strength and stiffness to support the wet concrete. Provide metal closures for all openings in composite steel deck 1/4 inch and over.

2.2.5 Sheet Metal Collar

Where deck is cut for passage of pipes, ducts, columns, etc., and deck is to remain exposed, provide a neatly cut sheet metal collar to cover edges of deck. Do not cut deck until after installation of supplemental supports.

2.2.6 Cover Plates

Sheet metal to close panel edge and end conditions, and where panels change direction or butt. Polyethylene-coated, self-adhesive, 2 inch wide joint

tape may be provided in lieu of cover plates on flat-surfaced decking butt joints.

Fabricate cover plates for abutting floor deck units from the specified structural-quality steel sheets not less than nominalthick before galvanizing. Provide 6 inch wide cover plates and form to match the contour of the floor deck units.

2.2.7 Roof Sump Pans

Sump pans must be provided for roof drains and must be minimum 0.075 inch thick steel, flat type. Shape sump pans to meet roof slope by the supplier or by a sheet metal specialist. Provide bearing flanges of sump pans to overlap steel deck a minimum of 3 inch. Shape, size, and reinforce the opening in bottom of the sump pan to receive roof drain.

2.2.8 Column Closures

Sheet metal, minimum 0.0358 inch thick or metal rib lath.

2.2.9 Access Hole Covers

Sheet metal, minimum 0.0474 inch thick.

2.2.10 Hanger

Provide clips or loops for utility systems and suspended ceilings of one or more of the following types:

a. Lip tabs or integral tabs where noncellular decking or flat plate of cellular section is 0.0474 inch thick or more, and a structural concrete fill is used over deck.

b. Slots or holes punched in decking for installation of pigtails.

c. Tabs driven from top side of decking and arranged so as not to pierce electrical cells.

d. Decking manufacturer's standard as approved by the Contracting Officer.

2.2.11 Mechanical Fasteners

Provide mechanical fasteners, such as powder actuated or pneumatically driven fasteners, for anchoring the deck to structural supports and adjoining units that are designed to meet the loads indicated. Provide positive locking-type fasteners listed by the Steel Deck Institute and ICC-ES, as approved by the Contracting Officer.

2.2.12 Miscellaneous Accessories

Furnish the manufacturer's standard accessories to complete the deck installation. Furnish metal accessories of the same material as the deck and with the minimum design thickness as follows: saddles, 0.0474 inch welding washers, 0.0598 inch cant strip, 0.0295 inch other metal accessories, 0.0358 inch unless otherwise indicated. Accessories must include but not be limited to saddles, welding washers, fasteners, cant strips, butt cover plates, underlapping sleeves, and ridge and valley plates.

2.3 FABRICATION

Furnish one sample of each type of Metal Floor Deck Units used to illustrate the actual cross section dimensions and configuration.

2.3.1 Roof Deck

Conform to ASTM A792/A792M or ASTM A1008/A1008M for deck used in conjunction with insulation and built-up roofing. Fabricate roof deck units of the steel design thickness required by the design drawings and galvanized.

2.3.1.1 Cant Strips for Roof Decks

Fabricate cant strips from the specified commercial-quality steel sheets not less than nominal 0.0359 inch thick before galvanizing. Bend strips to form a 45-degree cant not less than 5 inch wide, with top and bottom flanges a minimum 3 inch wide. Length of strips 10 feet.

2.3.1.2 Ridge and Valley Plates for Roof Decks

Fabricate plates from the specified structural-quality steel sheets, not less than nominal 0.0359 inch thick before galvanizing. Provide plates of minimum 4-1/2 inch wide and bent to provide tight fitting closures at ridges and valleys. Provide a minimum length of ridge and valley plates of 10 feet.

2.3.1.3 Metal Closure Stripsfor Roof Decks

Fabricate strips from the specified commercial-quality steel sheets not less than nominal 0.0359 inch thick before galvanizing. Provide strips from the configuration required to provide tight-fitting closures at open ends and sides of steel roof decking.

2.3.2 Touch-Up Paint

Provide touch-up paint for shop-painted units , and touch-up paint for zinc-coated units of an approved galvanizing repair paint with a high-zinc dust content . Touch-up welds with paint conforming to SSPC Paint 20 in accordance with ASTM A780/A780M. Maintain finish of deck units and accessories by using touch-up paint whenever necessary to prevent the formation of rust.

After roof decking installation, wire brush, clean, and touchup paint the scarred areas on top and bottom surfaces of metal roof decking. The scarred areas include welds, weld scars, bruises, and rust spots. Touchup galvanized surfaces with galvanizing repair paint. Touchup painted surfaces with repair paint of painted surfaces.

PART 3 EXECUTION

3.1 EXAMINATION

Prior to installation of decking units and accessories, examine worksite to verify that as-built structure will permit installation of decking system without modification.

3.2 INSTALLATION

Install steel deck units in accordance with SDI DDMO3 and approved shop drawings. Place units on structural supports, properly adjusted, leveled, and aligned at right angles to supports before permanently securing in place. Damaged deck and accessories including material which is permanently stained or contaminated, deformed, or with burned holes shall not be installed. Extend deck units over three or more supports unless absolutely impractical. Report inaccuracies in alignment or leveling to the Contracting Officer and make necessary corrections before permanently anchoring deck units. Locate deck ends over supports only. Do not use unanchored deck units as a work or storage platform. Permanently anchor units placed by the end of each working day. Do not support suspended ceilings, light fixtures, ducts, utilities, or other loads by steel deck unless indicated. Distribute loads by appropriate means to prevent damage.

3.2.1 Attachment

Immediately after placement and alignment, and after correcting inaccuracies, permanently fasten steel deck units to structural supports and to adjacent deck units by welding with normal5/8 inch diameter puddle welds or fastened with screws, powder-actuated fasteners, or pneumatically driven fasteners as indicated on the design drawings and in accordance with manufacturer's recommended procedure. Clamp or weight deck units to provide firm contact between deck units and structural supports while performing welding or fastening. Attachment of adjacent deck units by button-punching is prohibited.

3.2.1.1 Welding

Perform welding in accordance with AWS D1.3/D1.3M using methods and electrodes recommended by the manufacturers of the base metal alloys being used. Ensure only operators previously qualified by tests prescribed in AWS D1.1/D1.1M and AWS D1.3/D1.3M make welds. Immediately recertify, or replace qualified welders, that are producing unsatisfactory welding. Conform to the recommendations of the Steel Deck Institute and the steel deck manufacturerfor location, size, and spacing of fastening. Do not use welding washers at the connections of the deck to supports. Do not use welding washers at sidelaps. Holes and similar defects will not be acceptable. Lap 2 inch deck ends. Attach all partial or segments of deck units to structural supports in accordance with Section 2.5 of SDI DDMO3. Attach through the steel deck to the steel member . Immediately clean welds by chipping and wire brushing. Heavily coat welds, cut edges and damaged portions of coated finish with zinc-dust paint conforming to ASTM A780/A780M.

3.2.1.2 Fastening

Anchor deck to structural supports and adjoining units with mechanical fasteners as listed by the Steel Deck Institute, ICC-ES, the fastener and steel deck manufacturers, and approved by the Contracting Officer. Drive the powder-actuated fasteners with a low-velocity piston tool by an operator authorized by the manufacturer of the powder-actuated tool. Drive pneumatically fasteners with a low-velocity fastening tool and comply with the manufacturer's recommendations.

3.2.2 Openings

Cut or drill all holes and openings required and be coordinated with the drawings, specifications, and other trades. Frame and reinforce openings through the deck in conformance with SDI DDP. Reinforce holes and openings 6 to 12 inch across by 0.0474 inch thick steel sheet at least 12 inch wider and longer than the opening and be fastened to the steel deck at each corner of the sheet and at a maximum of 6 inch on center. Reinforce holes and openings larger than 12 inch by steel channels or angles installed perpendicular to the steel joists and supported by the adjacent steel joists. Install steel channels or angles perpendicular to the deck ribs and fasten to the channels or angles perpendicular to the steel joists.

3.2.3 Deck Damage

SDI MOC2, for repair of deck damage.

3.2.4 Accessory Installation

3.2.4.1 Adjusting Plates

Provide in locations too narrow to accommodate full-size deck units and install as shown on shop drawings.

3.2.4.2 End Closures

Provide end closure to close open ends of cells at columns, walls, and openings in deck.

3.2.4.3 Closures Above Partitions

Provide for closing voids between cells over partitions that are perpendicular to direction of cells. Provide a one-piece closure strip for partitions 4 inch nominal or less in thickness and two-piece closure strips for wider partitions. Provide sheet metal closures above fire-rated partitions at both sides of partition with space between filled with fiberglass insulation.

3.2.4.4 Column Closures

Provide for spaces between floor decking and columns which penetrate the deck. Field cut closure plate to fit column in the field and tack weld to decking and columns.

3.2.4.5 Access Hole Covers

Provide access whole covers to seal holes cut in decking to facilitate welding of the deck to structural supports.

3.2.4.6 Hangers

Provide as indicated to support utility system and suspended ceilings. Space devices so as to provide one device per 6.25 square feet.

3.2.5 Preparation of Fire-Proofed Surfaces

Provide deck surfaces, both composite and noncomposite, which are to receive sprayed-on fireproofing, galvanized and free of all grease, mill oil, paraffin, dirt, salt, and other contaminants which impair adhesion of

the fireproofing. Complete any required cleaning prior to steel deck installation using a cleaning method that is compatible with the sprayed-on fireproofing.

3.3 ROOF SUMP PANS

Place sump pans over openings in roof decking and fusion welded to top surface of roof decking. Do not exceed spacing of welds of 12 inch with not less than one weld at each corner. Field cut opening in the bottom of each roof sump pan to receive the roof drain as part of the work of this section.

3.4 CANT STRIPS FOR ROOF DECKS

Provide strips to be fusion welded to surface of roof decking, secured to wood nailers by galvanized screws or to steel framing by galvanized self-tapping screws or welds. Do not exceed spacing of welds and fasteners of 12 inch. Lap end joints a minimum 3 inch and secure with galvanized sheet metal screws spaced a maximum 4 inch on center.

3.5 RIDGE AND VALLEY PLATES FOR ROOF DECKS

Provide plates to be fusion welded to top surface of roof decking. Lap end joints a minimum 3 inch. For valley plates, provide endlaps to be in the direction of water flow.

3.6 CLOSURE STRIPS FOR ROOF DECKS

Provide closure strips at open, uncovered ends and edges of the roof decking and in voids between roof decking and top of walls and partitions where indicated. Install closure strips in position in a manner to provide a weathertight installation.

3.7 ROOF INSULATION SUPPORT FOR ROOF DECKS

Provide metal closure strips for support of roof insulation where rib openings in top surface of metal roof decking occur adjacent to edges and openings. Weld metal closure strips in position.

3.8 CLEANING AND PROTECTION FOR ROOF DECKS

Upon completion of the deck, sweep surfaces clean and prepare for installation of the roofing.

3.9 FIELD QUALITY CONTROL

3.9.1 Decks Not Receiving Concrete

Inspect the decking top surface for distortion after installation. For roof decks not receiving concrete, verify distortion by placing a straight edge across three adjacent top flanges. The maximum allowable gap between the straight edge and the top flanges is 1/16 inch; when gap is more than 1/16 inch, provide corrective measures or replacement. Reinspect decking after performing corrective measures or replacement.

-- End of Section --

SECTION 05 40 00

COLD-FORMED METAL FRAMING
05/10

PART 1 GENERAL

1.1 REFERENCES

The publications listed below form a part of this specification to the extent referenced. The publications are referred to within the text by the basic designation only.

AMERICAN IRON AND STEEL INSTITUTE (AISI)

AISI S100	(2012) North American Specification for the Design of Cold-Formed Steel Structural Members
AISI S200	(2007) North American Standard for Cold-Formed Steel Framing - General Provision
AISI S201	(2007) North American Standard for Cold-Formed Steel Framing - Product Data
AISI S202	(2011) Code of Standard Practice for Cold-formed Steel Structural Framing
AISI S211	(2007) North American Standard for Cold-Formed Steel Framing - Wall Stud Design
AISI S212	(2007) North American Standard for Cold-Formed Steel Framing - Header Design
AISI S213	(2007; Suppl 1 2009) North American Standard for Cold-Formed Steel Framing - Lateral Design
AISI SG02-KIT	(2001; Supp 1 2004) North American Specification for the Design of Cold-Formed Steel Structural Members
AISI SG03-3	(2002; Suppl 2001-2004; R 2008) Cold-Formed Steel Design Manual Set

AMERICAN WELDING SOCIETY (AWS)

AWS D1.1/D1.1M	(2010; Errata 2011) Structural Welding Code - Steel
AWS D1.3/D1.3M	(2008; Errata 2008) Structural Welding Code - Sheet Steel

ASTM INTERNATIONAL (ASTM)

ASTM A1003/A1003M	(2013b) Standard Specification for Steel

	Sheet, Carbon, Metallic- and Nonmetallic-Coated for Cold-Formed Framing Members
ASTM A123/A123M	(2013) Standard Specification for Zinc (Hot-Dip Galvanized) Coatings on Iron and Steel Products
ASTM A153/A153M	(2009) Standard Specification for Zinc Coating (Hot-Dip) on Iron and Steel Hardware
ASTM A370	(2012a) Standard Test Methods and Definitions for Mechanical Testing of Steel Products
ASTM A653/A653M	(2015) Standard Specification for Steel Sheet, Zinc-Coated (Galvanized) or Zinc-Iron Alloy-Coated (Galvannealed) by the Hot-Dip Process
ASTM C1007	(2011a) Standard Specification for Installation of Load Bearing (Transverse and Axial) Steel Studs and Related Accessories
ASTM C1513	(2013) Standard Specification for Steel Tapping Screws for Cold-Formed Steel Framing Connections
ASTM C955	(2011c) Load-Bearing (Transverse and Axial) Steel Studs, Runners (Tracks), and Bracing or Bridging for Screw Application of Gypsum Panel Products and Metal Plaster Bases
ASTM E119	(2014) Standard Test Methods for Fire Tests of Building Construction and Materials
ASTM E329	(2013b) Standard Specification for Agencies Engaged in the Testing and/or Inspection of Materials Used in Construction
ASTM F1941	(2010) Standard Specification for Electrodeposited Coatings on Threaded Fasteners (Unified Inch Screw Threads (UN/UNR))
ASTM F1941M	(2007) Standard Specification for Electrodeposited Coatings on Threaded Fasteners (Metric)

U.S. GREEN BUILDING COUNCIL (USGBC)

LEED	(2002; R 2005) Leadership in Energy and Environmental Design(tm) Green Building Rating System for New Construction

1.2 SUBMITTALS

Government approval is required for submittals with a "G" designation; submittals not having a "G" designation are for Contractor Quality Control approval. The following shall be submitted in accordance with Section 01 33 00 SUBMITTAL PROCEDURES:

SD-02 Shop Drawings

Framing Components; G

a. Cross sections, plans, and/or elevations showing component types and locations for each framing application; including shop coatings and material thicknesses for each framing component.

b. Connection details showing fastener type, quantity, location, and other information to assure proper installation.

c. Drawings depicting panel configuration, dimensions, components, locations, and construction sequence if the Contractor elects to install prefabricated/prefinished frames.

SD-03 Product Data

Steel studs,joists, tracks, bracing, bridging and accessories

LEED Documentation; G

SD-07 Certificates

Load-bearing cold-formed metal framing

Mill certificates or test reports from independent testing agency, qualified in accordance with ASTM E329, showing that the steel sheet used in the manufacture of each cold-formed component complies with the minimum yield strengths and uncoated steel thickness specified. Test reports shall be based on the results of three coupon tests in accordance with ASTM A370.

Welds

Certified copies of welder qualifications test records showing qualification in accordance with AWS D1.3/D1.3M.

LEED Documentation; G

1.3 DELIVERY, STORAGE, AND HANDLING

Deliver materials to job site and store in adequately ventilated, dry locations. Storage area shall permit easy access for inspection and handling. If necessary to store materials outside, stack off the ground, support on a level platform, and protect from the weather as approved. Handle materials to prevent damage. Finish of the framing members shall be maintained at all times, using an approved high zinc dust content, galvanizing repair paint whenever necessary to prevent the formation of

rust. Replace damaged items with new, as directed by the Contracting Officer. Steel framing and related accessories shall be stored and handled in accordance with the AISI S202, "Code of Standard Practice for Cold-Formed Steel Structural Framing".

1.4 LEED DOCUMENTATION

Reporting for LEED Credit MR4: Provide documentation indicating percentages by weight of post-industrial and post-consumer recycled content per unit of product. Indicate relative dollar value of recycled content products to total dollar value of products included in the project. Include a statement indicating cost for each product having recycled content.

Reporting for LEED Credit EQ4.2: Field primer product data indicating coatings do not exceed the VOC content limit of 250 G/L.

1.5 LOAD-BEARING COLD-FORMED METAL FRAMING

Include top and bottom tracks, bracing, fastenings, and other accessories necessary for complete installation. Framing members shall have the structural properties indicated. Where physical structural properties are not indicated, they shall be as necessary to withstand all imposed loads. Design framing in accordance with AISI SG03-3. Metal suspension systems for acoustical ceilings are specified in Section 09 51 00 ACOUSTICAL CEILINGS.

1.6 QUALITY ASSURANCE

a. Engineering Responsibility: Preparation of Shop Drawings, design calculations, and other structural data by a qualified professional engineer.

b. Professional Engineer Qualifications: A professional engineer who is legally qualified to practice in jurisdiction where project is located and who is experienced in providing engineering services of the kind indicated. Engineering services are defined as those performed for installations of cold-formed metal framing that are similar to those indicated for this project in material, design, and extent.

c. Testing Agency Qualifications: An independent testing agency, acceptable to authorities having jurisdiction, qualified according to ASTM E329 for testing indicated.

d. Product Tests: Mill certificates or data from a qualified independent testing agency indicating steel sheet complies with requirements, including base-metal thickness, yield strength, tensile strength, total elongation, chemical requirements, and metallic-coating thickness.

e. Welding Qualifications: Qualify procedures and personnel according to the following:

   1. AWS D1.1/D1.1M, "Structural Welding Code - Steel".

   2. AWS D1.3/D1.3M, "Structural Welding Code - Sheet Steel".

f. Fire-Test-Response Characteristics: Where indicated, provide cold-formed metal framing identical to that of assemblies tested for fire resistance per ASTM E119 by, and displaying a classification label

from, a testing and inspecting agency acceptable to authorities having jurisdiction.

g. AISI Specifications and Standards: Comply with:

1. AISI S100, "North American Specification for the Design of Cold-Formed Steel Structural Members".

2. AISI S200, "North American Standard for Cold-Formed Steel Framing - General Provision".

3. AISI S201, "North American Standard for Cold-Formed Steel Framing - Product Data".

4. AISI S202, "Code of Standard Practice for Cold-Formed Steel Structural Framing".

5. AISI S211, "North American Standard for Cold-Formed Steel Framing - Wall Stud Design".

6. AISI S212, "North American Standard for Cold-Formed Steel Framing - Header Design".

7. AISI S213, "North American Standard for Cold-Formed Steel Framing - Lateral Design".

1.6.1 Drawing Requirements

Submit framing components to show sizes, thicknesses, layout, material designations, methods of installation, and accessories.

PART 2 PRODUCTS

2.1 STEEL STUDS, JOISTS, TRACKS, BRACING, BRIDGING AND ACCESSORIES

Framing components shall comply with ASTM C955 and the following.

a. Recycled Content of Steel Products: Provide products with an average recycled content of steel products so postconsumer recycled content plus one-half of preconsumer recycled content as required to achieve LEED credit.

b. Steel Sheet: ASTM A1003/A1003M, Structural Grade, Type H, metallic coated, of grade and coating weight as follows:

1. Grade: As required by structural performance.

2. Coating: G60 (Z180), A60 (ZF180), AZ50 (AZ150), or GF30 (ZGF90).

c. Steel Sheet for Clips: ASTM A1003/A1003M, ASTM A653/A653M, structural steel, zinc coated, of grade and coating as follows:

1. Grade: As required by structural performance.

2. Coating: G90 (Z275).

d. Steel Studs: Manufacturer's standard C-shaped steel studs, of web depths indicated, punched, with stiffened flanges as indicated on structural drawings.

e. Steel Track: Manufacturer's standard U-shaped steel track, of web depths indicated, unpunched, with straight flanges as indicated on structural drawings.

2.1.1 Studs and Joists of 16 Gage (0.0538 Inch) and Heavier

Galvanized steel, ASTM A653/A653M and ASTM A1003/A1003M, SS Grade 50, G60.

2.1.2 Studs and Joists of 18 Gage (0.0478 Inch) and Lighter

Studs and Joists of 18 Gage (0.0428 Inch) and Lighter, Track, and Accessories (All Gages): Galvanized steel, ASTM A653/A653M and ASTM A1003/A1003M, SS, Grade 50 33,000 psi G60.

2.1.3 Sizes, Gages, Section Modulus, and Other Structural Properties

Size and gage as indicated. Steel stud deflection shall be limited to L/600 for exterior wall brick veneer construction.

2.2 MARKINGS

Studs and track shall have product markings stamped on the web of the section. The markings shall be repeated throughout the length of the member at a maximum spacing of 4 feet on center and shall be legible and easily read. The product marking shall include the following:

a. An ICC number.

b. Manufacturer's identification.

c. Minimum delivered uncoated steel thickness.

d. Protective coating designator.

e. Minimum yield strength.

2.3 CONNECTIONS

Screws for steel-to-steel connections shall be self-drilling, tapping screws in compliance with ASTM C1513 of the type, size and location as shown on the drawings. Electroplated screws shall have a minimum 5 micron zinc coating in accordance with ASTM F1941. Screws, bolts, and anchors shall be hot-dipped galvanized in accordance with ASTM A123/A123M or ASTM A153/A153M as appropriate. Screws bolts, and anchors shall be hot dipped galvanized in accordance with ASTM A123/A123M or ASTM A153/A153M as appropriate.

2.4 PLASTIC GROMMETS

Supply plastic grommets, recommended by stud manufacturer, to protect electrical wires. Prevent metal to metal contact for plumbing pipes.

PART 3 EXECUTION

3.1 FASTENING

Fasten framing members together by using self-drilling or self-tapping

screws.

3.1.1 Welds

All welding shall be performed in accordance with AWS D1.3/D1.3M, as modified by AISI SG02-KIT. All welders, welding operations, and welding procedures shall be qualified according to AWS D1.3/D1.3M. All welds shall be cleaned and coated with rust inhibitive galvanizing paint. Do not field weld materials lighter than 18 gage.

3.1.2 Screws

Screws shall be of the self-drilling self-tapping type, size, and location shown on the drawings. Screw penetration through joined materials shall not be less than three exposed threads. Minimum spacings and edge distances for screws shall be as specified in AISI SG02-KIT. Screws covered by sheathing materials shall have low profile heads.

3.1.3 Anchors

Anchors shall be of the type, size, and location shown on the drawings.

3.1.4 Powder-Actuated Fasteners

Powder-actuated fasteners shall be of the type, size, and location shown on the drawings.

3.2 INSTALLATION

Install cold-formed framing in accordance with ASTM C1007 and AISI S200.

Install cold-formed steel framing according to AISI S202 and to manufacturer's written instructions unless more stringent requirements are indicated.

3.2.1 Tracks

Provide accurately aligned runners at top and bottom of partitions. Anchor tracks as indicated in design calculations. Butt weld joints in tracks or splice with stud inserts. Fasteners shall be at least 3 inches from the edge of concrete slabs.

3.2.2 Studs

Cut studs square and set with firm bearing against webs of top and bottom tracks. Position studs vertically in tracks and space as indicated in design. Do not splice studs. Provide at least two studs at jambs of doors and other openings 2 feet wide or larger. Provide jack studs over openings, as necessary, to maintain indicated stud spacing. Provide tripled studs at corners, positioned to receive interior and exterior finishes. Fasten studs to top and bottom tracks screwing both flanges to the tracks. Framed wall openings shall include headers and supporting components as shown on the drawings. Headers shall be installed in all openings that are larger than the stud spacing in a wall. In curtain wall construction, provide for vertical movement where studs connect to the structural frame. Provide horizontal bracing in accordance with AISI SG03-3, consisting of, as a minimum, runner channel cut to fit between and welded

to the studs or hot- or cold-rolled steel channels inserted through cutouts in web of each stud and secured to studs with welded clip angles. Bracing shall be not less than the following:

LOAD	HEIGHT	BRACING
Wind load only	Up to 10 feet	One row at mid-height
	Over 10 feet	Rows 5'-0" o.c. maximum

3.2.3 Joists and Trusses

Locate each joist or truss directly above a stud. Provide doubled joists under parallel partitions wherever partition length exceeds 1/2 of joist span. Joists shall have at least 2.50 inches of bearing on steel, 4 inches on masonry, and shall be reinforced over bearings where required to prevent web crippling. Splice joists over bearings only. Lap and weld splices as indicated. Provide manufacturer's standard bridging which shall not be less than the following:

CLEAR SPAN	BRIDGING
Up to 14 feet	One row near center
14 to 20 feet	Two rows at 1/3 points
20 to 26 feet	Three rows at 1/4 points
26 to 32 feet	Four rows at 1/5 points

Temporary bracing shall be provided and remain in place until work is permanently stabilized.

3.2.4 Erection Tolerances

a. Framing members which will be covered by finishes such as wallboard, plaster, or ceramic tile set in a mortar setting bed, shall be within the following limits:

(1) Layout of walls and partitions: 1/4 inch from intended position;

(2) Plates and runners: 1/4 inch in 8 feet from a straight line;

(3) Studs: 1/4 inch in 8 feet out of plumb, not cumulative; and

(4) Face of framing members: 1/4 inch in 8 feet from a true plane.

b. Framing members which will be covered by ceramic tile set in dry-set mortar, latex-portland cement mortar, or organic adhesive shall be

within the following limits:

(1) Layout of walls and partitions: 1/4 inch from intended position;

(2) Plates and runners: 1/8 inch in 8 feet from a straight line;

(3) Studs: 1/8 inch in 8 feet out of plumb, not cumulative; and

(4) Face of framing members: 1/8 inch in 8 feet from a true plane.

-- End of Section --

THIS PAGE HAS BEEN INTENTIONALLY LEFT BLANK

SECTION 05 50 13

MISCELLANEOUS METAL FABRICATIONS
05/10

PART 1 GENERAL

1.1 REFERENCES

The publications listed below form a part of this specification to the extent referenced. The publications are referred to within the text by the basic designation only.

ALUMINUM ASSOCIATION (AA)

AA DAF45	(2003; Reaffirmed 2009) Designation System for Aluminum Finishes

AMERICAN INSTITUTE OF STEEL CONSTRUCTION (AISC)

AISC 303	(2010) Code of Standard Practice for Steel Buildings and Bridges

AMERICAN SOCIETY OF CIVIL ENGINEERS (ASCE)

ASCE 7	(2010; Errata 2011; Supp 1 2013) Minimum Design Loads for Buildings and Other Structures

AMERICAN SOCIETY OF SAFETY ENGINEERS (ASSE/SAFE)

ASSE/SAFE A10.3	(2013) Operations - Safety Requirements for Powder Actuated Fastening Systems

AMERICAN WELDING SOCIETY (AWS)

AWS D1.1/D1.1M	(2010; Errata 2011) Structural Welding Code - Steel

ASME INTERNATIONAL (ASME)

ASME B18.2.1	(2012; Errata 2013) Square and Hex Bolts and Screws (Inch Series)
ASME B18.2.2	(2010) Nuts for General Applications: Machine Screw Nuts, Hex, Square, Hex Flange, and Coupling Nuts (Inch Series)
ASME B18.21.1	(2009) Washers: Helical Spring-Lock, Tooth Lock, and Plain Washers (Inch Series)
ASME B18.6.2	(1998; R 2010) Slotted Head Cap Screws, Square Head Set Screws, and Slotted Headless Set Screws: Inch Series
ASME B18.6.3	(2013) Machine Screws, Tapping Screws, and Machine Drive Screws (Inch Series)

ASTM INTERNATIONAL (ASTM)

ASTM A123/A123M	(2013) Standard Specification for Zinc (Hot-Dip Galvanized) Coatings on Iron and Steel Products
ASTM A153/A153M	(2009) Standard Specification for Zinc Coating (Hot-Dip) on Iron and Steel Hardware
ASTM A307	(2012) Standard Specification for Carbon Steel Bolts and Studs, 60 000 PSI Tensile Strength
ASTM A36/A36M	(2014) Standard Specification for Carbon Structural Steel
ASTM A467/A467M	(2007; R 2012) Standard Specification for Machine Coil Chain
ASTM A47/A47M	(1999; R 2014) Standard Specification for Ferritic Malleable Iron Castings
ASTM A475	(2003a; E 2009; R 2009) Standard Specification for Zinc-Coated Steel Wire Strand
ASTM A48/A48M	(2003; R 2012) Standard Specification for Gray Iron Castings
ASTM A500/A500M	(2013) Standard Specification for Cold-Formed Welded and Seamless Carbon Steel Structural Tubing in Rounds and Shapes
ASTM A53/A53M	(2012) Standard Specification for Pipe, Steel, Black and Hot-Dipped, Zinc-Coated, Welded and Seamless
ASTM A653/A653M	(2015) Standard Specification for Steel Sheet, Zinc-Coated (Galvanized) or Zinc-Iron Alloy-Coated (Galvannealed) by the Hot-Dip Process
ASTM A780/A780M	(2009) Standard Practice for Repair of Damaged and Uncoated Areas of Hot-Dip Galvanized Coatings
ASTM A786/A786M	(2005; R 2009) Standard Specification for Hot-Rolled Carbon, Low-Alloy, High-Strength Low-Alloy, and Alloy Steel Floor Plates
ASTM A924/A924M	(2014) Standard Specification for General Requirements for Steel Sheet, Metallic-Coated by the Hot-Dip Process
ASTM B108/B108M	(2012; E 2012) Standard Specification for

	Aluminum-Alloy Permanent Mold Castings
ASTM B209	(2014) Standard Specification for Aluminum and Aluminum-Alloy Sheet and Plate
ASTM B221	(2014) Standard Specification for Aluminum and Aluminum-Alloy Extruded Bars, Rods, Wire, Profiles, and Tubes
ASTM B26/B26M	(2012) Standard Specification for Aluminum-Alloy Sand Castings
ASTM C1513	(2013) Standard Specification for Steel Tapping Screws for Cold-Formed Steel Framing Connections
ASTM D1187/D1187M	(1997; E 2011; R 2011) Asphalt-Base Emulsions for Use as Protective Coatings for Metal
ASTM E488/E488M	(2010) Standard Test Methods for Strength of Anchors in Concrete and Masonry Elements

MASTER PAINTERS INSTITUTE (MPI)

MPI 79	(Oct 2009) Alkyd Anti-Corrosive Metal Primer

NATIONAL ASSOCIATION OF ARCHITECTURAL METAL MANUFACTURERS (NAAMM)

NAAMM MBG 531	(2009) Metal Bar Grating Manual

NATIONAL FIRE PROTECTION ASSOCIATION (NFPA)

NFPA 211	(2016) Standard for Chimneys, Fireplaces, Vents, and Solid Fuel-Burning Appliances

THE SOCIETY FOR PROTECTIVE COATINGS (SSPC)

SSPC SP 3	(1982; E 2004) Power Tool Cleaning
SSPC SP 6/NACE No.3	(2007) Commercial Blast Cleaning

1.2 SUBMITTALS

Government approval is required for submittals with a "G" designation; submittals not having a "G" designation are for Contractor Quality Control approval. When used, a designation following the "G" designation identifies the office that will review the submittal for the Government. Submit the following in accordance with Section 01 33 00 SUBMITTAL PROCEDURES:

SD-02 Shop Drawings

Access doors and panels, installation drawings

Cover plates and frames, installation drawings

Expansion joint covers, installation drawings

Submit fabrication drawings showing layout(s), connections to structural system, and anchoring details as specified in AISC 303.

Submit templates, erection and installation drawings indicating thickness, type, grade, class of metal, and dimensions. Show construction details, reinforcement, anchorage, and installation with relation to the building construction.

SD-03 Product Data

Access doors and panels

Cover plates and frames

Control-joint covers

Expansion joint covers

1.3 QUALIFICATION OF WELDERS

Qualify welders in accordance with AWS D1.1/D1.1M. Use procedures, materials, and equipment of the type required for the work.

1.4 DELIVERY, STORAGE, AND PROTECTION

Protect from corrosion, deformation, and other types of damage. Store items in an enclosed area free from contact with soil and weather. Remove and replace damaged items with new items.

PART 2 PRODUCTS

2.1 MATERIALS

2.1.1 Structural Carbon Steel

ASTM A36/A36M.

2.1.2 Structural Tubing

ASTM A500/A500M.

2.1.3 Steel Pipe

ASTM A53/A53M, Type E or S, Grade B.

2.1.4 Fittings for Steel Pipe

Standard malleable iron fittings ASTM A47/A47M.

2.1.5 Gratings

a. Gray cast iron ASTM A48/A48M, Class 40.

b. Metal plank grating, non-slip requirement, aluminum ASTM B209, 6061-T6; steel ASTM A653/A653M, G90.

c. Metal bar type grating NAAMM MBG 531.

2.1.6 Floor Plates, Patterned

Floor plate ASTM A786/A786M. Steel plate shall not be less than 14 gage.

2.1.7 Anchor Bolts

ASTM A307. Where exposed, shall be of the same material, color, and finish as the metal to which applied.

2.1.7.1 Expansion Anchors Sleeve Anchors Adhesive Anchors

Provideexpansion anchors sleeve anchors and adhesive anchors and indicated in drawings. Minimum embedment shall be as per drawings or manufacturer's recommendations. Design values listed shall be as tested according to ASTM E488/E488M.

2.1.7.2 Lag Screws and Bolts

ASME B18.2.1, type and grade best suited for the purpose.

2.1.7.3 Toggle Bolts

ASME B18.2.1.

2.1.7.4 Bolts, Nuts, Studs and Rivets

ASME B18.2.2 or ASTM A307.

2.1.7.5 Powder Actuated Fasteners

Follow safety provisions of ASSE/SAFE A10.3.

2.1.7.6 Screws

ASME B18.2.1, ASME B18.6.2, ASME B18.6.3 and ASTM C1513.

2.1.7.7 Washers

Provide plain washers to conform to ASME B18.21.1. Provide beveled washers for American Standard beams and channels, square or rectangular, tapered in thickness, and smooth. Provide lock washers to conform to ASME B18.21.1.

2.1.8 Aluminum Alloy Products

Conform to ASTM B209 for sheet plate, ASTM B221 for extrusions and ASTM B26/B26M or ASTM B108/B108M for castings, as applicable. Provide aluminum extrusions at least 1/8 inch thick and aluminum plate or sheet at least 0.050 inch thick.

2.2 FABRICATION FINISHES

2.2.1 Galvanizing

Hot-dip galvanize items specified to be zinc-coated, after fabrication where practicable. Galvanizing: ASTM A123/A123M, ASTM A153/A153M, ASTM A653/A653M or ASTM A924/A924M, G90, as applicable.

2.2.2 Galvanize

Anchor bolts, grating fasteners, washers, and parts or devices necessary for proper installation, unless indicated otherwise.

2.2.3 Repair of Zinc-Coated Surfaces

Repair damaged surfaces with galvanizing repair method and paint conforming to ASTM A780/A780M or by application of stick or thick paste material specifically designed for repair of galvanizing, as approved by Contracting Officer. Clean areas to be repaired and remove slag from welds. Heat surfaces to which stick or paste material is applied, with a torch to a temperature sufficient to melt the metallics in stick or paste; spread molten material uniformly over surfaces to be coated and wipe off excess material.

2.2.4 Shop Cleaning and Painting

2.2.4.1 Surface Preparation

Blast clean surfaces in accordance with SSPC SP 6/NACE No.3. Surfaces that will be exposed in spaces above ceiling or in attic spaces, crawl spaces, furred spaces, and chases may be cleaned in accordance with SSPC SP 3 in lieu of being blast cleaned. Wash cleaned surfaces which become contaminated with rust, dirt, oil, grease, or other contaminants with solvents until thoroughly clean. Steel to be embedded in concrete shall be free of dirt and grease. Do not paint or galvanize bearing surfaces, including contact surfaces within slip critical joints, but coat with rust preventative applied in the shop.

2.2.4.2 Pretreatment, Priming and Painting

Apply pretreatment, primer, and paint in accordance with manufacturer's printed instructions. On surfaces concealed in the finished construction or not accessible for finish painting, apply an additional prime coat to a minimum dry film thickness of 1.0 mil. Tint additional prime coat with a small amount of tinting pigment.

2.2.5 Nonferrous Metal Surfaces

Protect by plating, anodic, or organic coatings.

2.2.6 Aluminum Surfaces

2.2.6.1 Surface Condition

Before finishes are applied, remove roll marks, scratches, rolled-in scratches, kinks, stains, pits, orange peel, die marks, structural streaks, and other defects which will affect uniform appearance of finished surfaces.

2.2.6.2 Aluminum Finishes

Unexposed sheet, plate and extrusions may have mill finish as fabricated. Sandblast castings' finish, medium, AA DAF45. Unless otherwise specified, provide all other aluminum items with a anodized finish. Provide a coating thickness not less than that specified for protective and decorative type finishes for items used in interior locations or architectural Class I type finish for items used in exterior locations in AA DAF45. Provide a polished satin finish on items to be anodized.

2.3 ACCESS DOORS AND PANELS

Provide flush type access doors and panels unless otherwise indicated. Fabricate frames for access doors of steel not lighter than 14 gage with welded joints and anchorage for securing into construction. Provide access doors with a minimum of 14 by 20 inches and of not lighter than 14 gage steel, with stiffened edges and welded attachments. Provide access doors hinged to frame and with a flush-face, turn-screw-operated latch. Provide exposed metal surfaces with a shop applied prime coat.

Provide ceiling access panels for terminal air blenders as indicated.

2.4 CONTROL-JOINT COVERS

Provide control-joint covers to be located on wall surfaces of concrete, masonry and tile work. Provide protective coating on the surface in contact with concrete, masonry or tile.

2.5 CORNER GUARDS AND SHIELDS

For jambs and sills of openings and edges of platforms provide steel shapes and plates anchored in masonry or concrete with welded steel straps or end-weld stud anchors. Form corner guards for use with glazed or ceramic tile finish on walls with 0.0625 inch thick corrosion-resisting steel with polished or satin finish, extend 5 feet above the top of cove base or to the top of the wainscot, whichever is less, and securely anchor to the supporting wall. Corner guards on exterior shall be galvanized.

2.6 COVER PLATES AND FRAMES

Fabricate cover plates of 1/4 inch thick rolled steel weighing not more than 100 pounds per plate with a elected raised pattern nonslip top surface. Plate shall be galvanized. Reinforce to sustain a live load of 40 pounds per square foot. Frames shall be structural steel shapes and plates, with bent steel bars or headed anchors welded to frame for anchoring to concrete or securely fastened to the structure as indicated. Miter and weld all corners. Butt joint straight runs. Allow for expansion on straight runs over 15 feet. Provide holes for lifting tools. Provide flush drop handles for removal formed from 1/4 inch round stock where indicated. Provide holes and openings with 1/2 inch clearance for pipes and equipment. Remove sharp edges and burrs from cover plates and exposed edges of frames. Weld all connections and grind top surface smooth. Weld bar stops every six inches. Provide 1/8 inch clearance at edges and between cover plates.

2.7 EXPANSION JOINT COVERS

Provide expansion joint covers constructed of extruded aluminum with anodized satin aluminum finish for walls and ceilings and with standard mill finish for floor covers and exterior covers. Furnish plates, backup angles, expansion filler strip and anchors as indicated.

2.8 EXTRUDED FLOOR MAT FRAMES

Provide where shown on plans - see section 12 48 13 ENTRANCE FLOOR MATS AND FRAMES.

2.9 GAS-TIGHT MANHOLE COVER AND FRAME

Provide a heavy duty type made of ductile cast-iron with bolted lid, machined bearing surfaces and gasket grooves, continuous neoprene gasket, counter sunk bronze hex head cap screws, and concealed watertight pickholes. Provide frame with a 30 inch diameter clear opening. Maximum weight of frame and cover together to be 530 pounds.

2.10 GUARD POSTS (BOLLARDS/PIPE GUARDS)

Provideprime coated standard weight steel pipe as specified in ASTM A53/A53M. Anchor posts in concrete as indicated and fill solidly with concrete with minimum compressive strength of 2500 psi. Size and diameter as indicated on civil drawings.

2.11 MISCELLANEOUS PLATES AND SHAPES

Provide for items that do not form a part of the structural steel framework, such as lintels, sill angles, miscellaneous mountings and frames. Provide lintels fabricated from structural steel shapes over openings in masonry walls and partitions as indicated and as required to support wall loads over openings. Provide with connections and fasteners. Construct to have at least 8 inches bearing on masonry at each end.

Provide angles and plates, ASTM A36/A36M, for embedment as indicated. Galvanize embedded items exposed to the elements according to ASTM A123/A123M.

2.12 SAFETY CHAINS

Construct safety chains of galvanized steel, straight link type, 3/16 inch diameter, with at least twelve links per foot, and with snap hooks on each end. Test safety chain in accordance with ASTM A467/A467M, Class CS. Provide snap hooks of boat type. Provide galvanized 3/8 inch bolt with 3/4 inch eye diameter for attachment of chain, anchored as indicated. Supply two chains, 4 inches longer than the anchorage spacing, for each guarded area. Locate safety chain where indicated.

2.13 CHIMNEYS, VENTS, AND SMOKESTACKS

Design and construct chimneys and vents in accordance with NFPA 211. Form chimney connectors of not lighter than 20 gauge galvanized steel. Design and construct stacks to withstand a wind velocity of 110 mile/h in accordance with ASCE 7. Construct unlined stacks of black-steel plates not less than 3/16 inch thick conforming to ASTM A36/A36M. Weld seams and joints, except provide an angle flange for connection to the boiler, other equipment, and stack support.

2.14 CLEANOUT DOORS

Provide galvanized cleanout doors with frames, and unless otherwise indicated sized to match flues. Provide a continuous flange and anchors for securing frames into masonry. The doors shall be smokeproof, hinged, and have fastening devices to hold the door closed.

2.15 DOWNSPOUT BOOTS

Provide cast iron downspout boots with receiving bells sized to fit downspouts. See architectural drawings.

2.16 FOUNDATION VENTS

Provide foundation vents of the same size as the masonry units or sized as indicated, and made of extruded aluminum with integral water stop and sliding interior closer or damper operable from the outside. Provide an insect screen at the back of the vent. Provide Louvered openings with top and bottom drip lips, and the net ventilating area with closer or damper open at least 35 percent of the gross wall opening. The frames shall have a structural strength adequate to permit use in masonry walls without a lintel.

2.17 GUY CABLES

Guy cables shall be prestretched, galvanized wire rope of the sizes indicated. Wire rope shall conform to ASTM A475, high strength grade with Class A coating. Guys shall have a factory attached clevis top-end fitting; a factory attached open-bridge strand socket bottom-end fitting; and be complete with oval eye, threaded anchor rods. Fittings and accessories shall be hot-dip galvanized.

2.18 WINDOW SUB-SILL

Provide window sub-sill of extruded aluminum alloy with size and design indicated. Provide not less than two anchors per window section for securing into mortar joints of masonry sill course. Provide sills for banks of windows with standard mill finish with a protective coating, prior to shipment, of two coats of a clear, colorless, methacrylate lacquer applied to all surfaces of the sills.

2.19 WINDOW WELLS

Window wells shall be not lighter than 16 gauge, corrugated sheet steel, hot-dip galvanized after fabrication with top edge of walls having a 3/4 inch bead or rolled top. Window wells shall be semicircular or semielliptical in form and shall overlap the window by at least 3 inches on each side. Removable cover, hot-dip galvanized after fabrication, consisting of steel bar grate with bars spaced at not more than 2 inch centers and welded to 1 by 1/4 inch frame shall be designed to fit into and rest on top edge of window well.

PART 3 EXECUTION

3.1 GENERAL INSTALLATION REQUIREMENTS

Install items at locations indicated, according to manufacturer's instructions. Verify all measurements and take all field measurements necessary before fabrication. Exposed fastenings shall be compatible materials, shall generally match in color and finish, and harmonize with the material to which fastenings are applied. Include materials and parts necessary to complete each item, even though such work is not definitely shown or specified. Poor matching of holes for fasteners shall be cause for rejection. Conceal fastenings where practicable. Thickness of metal and details of assembly and supports shall provide strength and stiffness. Form joints exposed to the weather shall be formed to exclude water. Items listed below require additional procedures.

3.2 WORKMANSHIP

Provide miscellaneous metalwork that is well formed to shape and size, with sharp lines and angles and true curves. Drilling and punching shall produce clean true lines and surfaces. Provide continuous welding along the entire area of contact except where tack welding is permitted. Do not tack weld exposed connections of work in place and ground smooth. Provide a smooth finish on exposed surfaces of work in place and unless otherwise approved, flush exposed riveting. Mill joints where tight fits are required. Corner joints shall be coped or mitered, well formed, and in true alignment. Accurately set work to established lines and elevations and securely fastened in place. Install in accordance with manufacturer's installation instructions and approved drawings, cuts, and details.

3.3 ANCHORAGE, FASTENINGS, AND CONNECTIONS

Provide anchorage where necessary for fastening miscellaneous metal items securely in place. Include for anchorage not otherwise specified or indicated slotted inserts, expansion shields, and powder-driven fasteners, when approved for concrete; toggle bolts and through bolts for masonry; machine and carriage bolts for steel; through bolts, lag bolts, and screws for wood. Do not use wood plugs in any material. Provide non-ferrous attachments for non-ferrous metal. Make exposed fastenings of compatible materials, generally matching in color and finish, to which fastenings are applied. Conceal fastenings where practicable.

3.4 BUILT-IN WORK

Form for anchorage metal work built-in with concrete or masonry, or provide with suitable anchoring devices as indicated or as required. Furnish metal work in ample time for securing in place as the work progresses.

3.5 WELDING

Perform welding, welding inspection, and corrective welding, in accordance with AWS D1.1/D1.1M. Use continuous welds on all exposed connections. Grind visible welds smooth in the finished installation.

3.6 FINISHES

3.6.1 Dissimilar Materials

Where dissimilar metals are in contact, protect surfaces with a coat conforming to MPI 79 to prevent galvanic or corrosive action. Where aluminum is in contact with concrete, plaster, mortar, masonry, wood, or absorptive materials subject to wetting, protect with ASTM D1187/D1187M, asphalt-base emulsion.

3.6.2 Field Preparation

Remove rust preventive coating just prior to field erection, using a remover approved by the rust preventive manufacturer. Surfaces, when assembled, shall be free of rust, grease, dirt and other foreign matter.

3.6.3 Environmental Conditions

Do not clean or paint surface when damp or exposed to foggy or rainy weather, when metallic surface temperature is less than 5 degrees F above the dew point of the surrounding air, or when surface temperature is below

45 degrees F or over 95 degrees F, unless approved by the Contracting Officer.

3.7 ACCESS PANELS

Install a removable access panel not less than 12 by 12 inches directly below each valve, flow indicator, damper, or air splitter that is located above the ceiling, other than an acoustical ceiling, and that would otherwise not be accessible.

3.8 CONTROL-JOINT COVERS

Provide covers over control-joints and fasten on one side only with fasteners spaced to give positive contact with wall surfaces on both sides of joint throughout the entire length of cover.

3.9 COVER PLATES AND FRAMES

Install the tops of cover plates and frames flush with floor.

3.10 INSTALLATION OF CHIMNEYS, VENTS, AND SMOKESTACKS

Install chimneys and vents in accordance with NFPA 211. Provide a cleanout opening with a tight-fitting, hinged, cast-iron door and frame at the base of each smokestack. Provide a top band on stacks for attachment of painter's rigging. Provide roof housing, rain cap, downdraft diverter, fire damper, and other accessories required for a complete installation. Join sections of prefabricated lined stacks with acid-resisting high-temperature cement and steel draw bands. Provide means to prevent accumulation of water in the smokestack.

3.11 DOOR GUARD FRAME

Mount door guard frame over the glazed opening using 1/4 inch lag bolts on the interior of wood doors or tamperproof through bolts on the interior of metal doors.

3.12 INSTALLATION OF GUARD POSTS (BOLLARDS/PIPE GUARDS)

Set pipe guards vertically in concrete piers. Construct piers of, and the hollow cores of the pipe filled with, concrete having a compressive strength of 3000 psi.

3.13 INSTALLATION OF DOWNSPOUT BOOTS

Secure downspouts to building through integral lips with appropriate fasteners. See architectural drawings.

3.14 RECESSED FLOOR FRAMES & MATS

Verify field measurements prior to releasing materials for fabrication by the manufacturer. Use a mat frame to ensure recess accuracy in size, shape and depth. Form drain pit by blocking out concrete when frames are installed, dampproof after concrete has set. Assemble frames onsite and install so that upper edge will be level with finished floor surface. Screeded the concrete base inside the mat recess frame area using the edge provided by the frame as a guide and anchor into the cement with anchor pins a minimum of 24 inches on centers. Also see section 12 48 13 ENTRANCE FLOOR MATS AND FRAMES.

3.15 MOUNTING OF SAFETY CHAINS

Mount safety chains 3 feet 6 inches and 2 feet above the floor.

-- End of Section --

SECTION 06 10 00

ROUGH CARPENTRY
02/12

PART 1 GENERAL

1.1 REFERENCES

The publications listed below form a part of this specification to the extent referenced. The publications are referred to within the text by the basic designation only.

AMERICAN LUMBER STANDARDS COMMITTEE (ALSC)

ALSC PS 20	(2010) American Softwood Lumber Standard

AMERICAN RAILWAY ENGINEERING AND MAINTENANCE-OF-WAY ASSOCIATION (AREMA)

AREMA Eng Man	(2012) Manual for Railway Engineering

AMERICAN WOOD COUNCIL (AWC)

AWC NDS	(2012) National Design Specification (NDS) for Wood Construction
AWC WFCM	(2012) Wood Frame Construction Manual for One- and Two-Family Dwellings

AMERICAN WOOD PROTECTION ASSOCIATION (AWPA)

AWPA BOOK	(2012) AWPA Book of Standards
AWPA M2	(2011) Standard for Inspection of Treated Wood Products
AWPA M6	(2013) Brands Used on Preservative Treated Materials
AWPA P18	(2010) Nonpressure Preservatives
AWPA P49	(2010) Standard for Fire Retardant FR-1
AWPA P5	(2007) Standard for Waterborne Preservatives
AWPA T1	(2013) Use Category System: Processing and Treatment Standard
AWPA U1	(2013) Use Category System: User Specification for Treated Wood

APA - THE ENGINEERED WOOD ASSOCIATION (APA)

APA E445	(2002) Performance Standards and Qualification Policy for Structural-Use Panels (APA PRP-108)

APA F405	(1999) Performance Rated Panels
APA L870	(2010) Voluntary Product Standard, PS 1-09, Structural Plywood
APA S350	(2011) Performance Standard for Wood-Based Structural-Use Panels

ASME INTERNATIONAL (ASME)

ASME B18.2.1	(2012; Errata 2013) Square and Hex Bolts and Screws (Inch Series)
ASME B18.2.2	(2010) Nuts for General Applications: Machine Screw Nuts, Hex, Square, Hex Flange, and Coupling Nuts (Inch Series)
ASME B18.5.2.1M	(2006; R 2011) Metric Round Head Short Square Neck Bolts
ASME B18.5.2.2M	(1982; R 2010) Metric Round Head Square Neck Bolts
ASME B18.6.1	(1981; R 2008) Wood Screws (Inch Series)

ASTM INTERNATIONAL (ASTM)

ASTM A153/A153M	(2009) Standard Specification for Zinc Coating (Hot-Dip) on Iron and Steel Hardware
ASTM A307	(2012) Standard Specification for Carbon Steel Bolts and Studs, 60 000 PSI Tensile Strength
ASTM D1435	(2013) Standard Practice for Outdoor Weathering of Plastics
ASTM D1972	(1997; R 2005) Standard Practice for Generic Marking of Plastic Products
ASTM D2898	(2010) Accelerated Weathering of Fire-Retardant-Treated Wood for Fire Testing
ASTM F1667	(2013) Driven Fasteners: Nails, Spikes, and Staples
ASTM F547	(2006; R 2012) Nails for Use with Wood and Wood-Base Materials

FM GLOBAL (FM)

FM 4435	(2013) Roof Perimeter Flashing

FOREST STEWARDSHIP COUNCIL (FSC)

FSC STD 01 001	(2000) Principles and Criteria for Forest

Stewardship

SOUTH COAST AIR QUALITY MANAGEMENT DISTRICT (SCAQMD)

SCAQMD Rule 1168	(1989; R 2005) Adhesive and Sealant Applications

U.S. GENERAL SERVICES ADMINISTRATION (GSA)

CID A-A-1923	(Rev A; Notice 2) Shield, Expansion (Lag, Machine and Externally Threaded Wedge Bolt Anchors)
CID A-A-1924	(Rev A; Notice 2) Shield, Expansion (Self Drilling Tubular Expansion Shell Bolt Anchors
CID A-A-1925	(Rev A; Notice 2) Shield Expansion (Nail Anchors)

U.S. GREEN BUILDING COUNCIL (USGBC)

LEED NC	(2009) Leadership in Energy and Environmental Design(tm) New Construction Rating System

1.2 SUBMITTALS

Government approval is required for submittals with a "G" designation; submittals not having a "G" designation are for Contractor Quality Control approval. The following shall be submitted in accordance with Section 01 33 00 SUBMITTAL PROCEDURES:

SD-02 Shop Drawings

Fabricated structural members; G

Modifications of structural members; G

Drawings of structural laminated members, fabricated wood trusses, engineered wood joists and rafters, and other fabricated structural members indicating materials, shop fabrication, and field erection details; including methods of fastening.

SD-03 Product Data

Local/Regional Materials; (LEED NC)

Submit documentation indicating distance between manufacturing facility and the project site. Indicate distance of raw material origin from the project site. Indicate relative dollar value of local/regional materials to total dollar value of products included in project.

Salvaged Lumber; (LEED NC)
Recovered Lumber; (LEED NC)

Documentation certifying products are from salvaged/recovered lumber sources. Indicate relative dollar value of salvaged

content products to total dollar value of products included in project.

Plastic Lumber; (LEED NC)

Submit documentation indicating percentage of post-industrial and post-consumer recycled content per unit of product. Indicate relative dollar value of recycled content products to total dollar value of products included in project. Where recycled lumber materials are used for structural applications, include lumber certification and quality grading.

Fire-retardant treatment
Structural-use and OSB panels; (LEED NC)

Submit documentation verifying that no urea-formaldehyde resins were used.

Oriented Strand Board; (LEED NC)

Submit documentation indicating relative dollar value of rapidly renewable materials to total dollar value of products included in project.

Adhesives; (LEED NC)

Submit manufacturer's product data, indicating VOC content.

SD-05 Design Data

Modifications of structural members; G

Design analysis and calculations showing design criteria used to accomplish the applicable analysis.

SD-06 Test Reports

Preservative-treated lumber and plywood

SD-07 Certificates

Forest Stewardship Council (FSC) Certification; (LEED NC)

Certificates of grade

Manufacturer's certificates (approved by an American Lumber Standards approved agency) attesting that lumber and material not normally grade marked meet the specified requirements. Certificate of Inspection for grade marked material by an American Lumber Standards Committee (ALSC) recognized inspection agency prior to shipment.

Preservative treatment

SD-10 Operation and Maintenance Data

Plastic

When not labeled, identify types in Operation and Maintenance

Manual.

SD-11 Closeout Submittals

Local/Regional Materials; (LEED NC)

LEED documentation relative to local/regional materials credit in accordance with LEED Reference Guide. Include in LEED Documentation Notebook.

Plastic Lumber; (LEED NC)

LEED documentation relative to recycled content credit in accordance with LEED Reference Guide. Include in LEED Documentation Notebook.

Adhesives; (LEED NC)

LEED documentation relative to low emitting materials credit in accordance with LEED Reference Guide. Include in LEED Documentation Notebook.

Oriented Strand Board; (LEED NC)

LEED documentation relative to rapidly renewable materials credit in accordance with LEED Reference Guide. Include in LEED Documentation Notebook.

Structural-use and OSB Panels; (LEED NC)

LEED documentation relative to low emitting materials credit in accordance with LEED Reference Guide. Include in LEED Documentation Notebook.

Certified Wood; (LEED NC)

LEED documentation relative to certified wood credit in accordance with LEED Reference Guide. Include in LEED Documentation Notebook.

1.3 DELIVERY AND STORAGE

Deliver materials to the site in an undamaged condition. Store, protect, handle, and install prefabricated structural elements in accordance with manufacturer's instructions and as specified. Store materials off the ground to provide proper ventilation, with drainage to avoid standing water, and protection against ground moisture and dampness. Store materials with a moisture barrier at both the ground level and as a cover forming a well ventilated enclosure. Store wood I-beams and glue-laminated beams and joists on edge. Adhere to requirements for stacking, lifting, bracing, cutting, notching, and special fastening requirements. Remove defective and damaged materials and provide new materials. Store separated reusable wood waste convenient to cutting station and area of work.

1.4 GRADING AND MARKING

1.4.1 Lumber

Mark each piece of framing and board lumber or each bundle of small pieces

of lumber with the grade mark of a recognized association or independent inspection agency. Such association or agency shall be certified by the Board of Review, American Lumber Standards Committee, to grade the species used. Surfaces that are to be exposed to view shall not bear grademarks, stamps, or any type of identifying mark. Hammer marking will be permitted on timbers when all surfaces will be exposed to view.

1.4.2 Plywood

Mark each sheet with the mark of a recognized association or independent inspection agency that maintains continuing control over the quality of the plywood. The mark shall identify the plywood by species group or span rating, exposure durability classification, grade, and compliance with APA L870.Surfaces that are to be exposed to view shall not bear grademarks or other types of identifying marks.

1.4.3 Structural-Use and OSB Panels

Mark each panel with the mark of a recognized association or independent inspection agency that maintains continuing control over the quality of the panel. The mark shall indicate end use, span rating, and exposure durability classification. Oriented Strand Board (OSB), APA F405.

1.4.4 Preservative-Treated Lumber and Plywood

The Contractor shall be responsible for the quality of treated wood products. Each treated piece shall be inspected in accordance with AWPA M2 and permanently marked or branded, by the producer, in accordance with AWPA M6. The Contractor shall provide Contracting Officer's Representative (COR) with the inspection report of an approved independent inspection agency that offered products comply with applicable AWPA Standards. The appropriate Quality Mark on each piece will be accepted, in lieu of inspection reports, as evidence of compliance with applicable AWPA treatment standards.

1.4.5 Fire-Retardant Treated Lumber

Mark each piece in accordance with AWPA M6, except pieces that are to be natural or transparent finished. In addition, exterior fire-retardant lumber shall be distinguished by a permanent penetrating blue stain. Labels of a nationally recognized independent testing agency will be accepted as evidence of conformance to the fire-retardant requirements of AWPA M6.

1.4.6 Hardboard, Gypsum Board, and Fiberboard

Mark each sheet or bundle to identify the standard under which the material is produced and the producer.

1.4.7 Plastic Lumber

Label plastic products to be incorporated into the project in accordance with ASTM D1972, or provide product data indicating polymeric information in the Operation and Maintenance Manual.

a. Type 1: Polyethylene Terephthalate (PET, PETE).
b. Type 2: High Density Polyethylene (HDPE).
c. Type 3: Vinyl (Polyvinyl Chloride or PVC).
d. Type 4: Low Density Polyethylene (LDPE).
e. Type 5: Polypropylene (PP).

f. Type 6: Polystyrene (PS).
g. Type 7: Other. Use of this code indicates that the package in question is made with a resin other than the six listed above, or is made of more than one resin listed above, and used in a multi-layer combination.

1.5 SIZES AND SURFACING

ALSC PS 20 for dressed sizes of yard and structural lumber. Lumber shall be surfaced four sides. Size references, unless otherwise specified, are nominal sizes, and actual sizes shall be within manufacturing tolerances allowed by the standard under which the product is produced. Other measurements are IP or SI standard.

1.6 MOISTURE CONTENT

Air-dry or kiln-dry lumber. Kiln-dry treated lumber after treatment. Maximum moisture content of wood products shall be as follows at the time of delivery to the job site:

a. Framing lumber and board, 19 percent maximum

b. Timbers 5 inches and thicker, 25 percent maximum

c. Materials other than lumber; moisture content shall be in accordance with standard under which the product is produced

1.7 PRESERVATIVE TREATMENT

Treat wood products with waterborne wood preservatives conforming to AWPA P5. Pressure treatment of wood products shall conform to the requirements of AWPA BOOK Use Category System Standards U1 and T1. Pressure-treated wood products shall not contain arsenic, chromium, or other agents classified as carcinogenic, probably carcinogenic, or possibly carcinogenic to humans (compounds in Groups 1, 2A, or 2B) by the International Agency for Research on Cancer (IARC), Lyon, France. Pressure-treated wood products shall not exceed the limits of the U.S. EPA's Toxic Characteristic Leaching Procedure (TCLP), and shall not be classified as hazardous waste. Submit certification from treating plant stating chemicals and process used and net amount of preservatives retained are in conformance with specified standards.

a. 0.25 pcf intended for above ground use.

1. Wood sills, soles, plates, furring, and sleepers that are less than 24 inches from the ground, furring and nailers that are set into or in contact with concrete or masonry.

2. Nailers, edge strips, crickets, curbs, and cants for roof decks.

1.7.1 New Construction

Use a boron-based preservative conforming to AWPA P18, sodium silicate wood mineralization process, or Ammoniacal Copper Quaternary Compound to treat wood. Use boron-based preservatives for above-ground applications only.

1.8 FIRE-RETARDANT TREATMENT

Fire-retardant treated wood shall be pressure treated with fire retardants conforming to AWPA P49. Fire retardant treatment of wood products shall

conform to the requirements of AWPA U1, Commodity Specification H and AWPA T1, Section H. Treatment and performance inspection shall be by an independent and qualified testing agency that establishes performance ratings. Each piece or bundle of treated material shall bear identification of the testing agency to indicate performance in accordance with such rating. Treated materials to be exposed to rain wetting shall be subjected to an accelerated weathering technique in accordance with ASTM D2898 prior to being tested. Such items which will not be inside a building, and such items which will be exposed to heat or high humidity, shall receive exterior fire-retardant treatment. Fire-retardant-treated wood products shall be free of halogens, sulfates, ammonium phosphate, and formaldehyde. Items to be fire treated include the following:

a. Internal wall blocking
b. Electrical and Telecom back boards

1.9 QUALITY ASSURANCE

1.9.1 Drawing Requirements

For fabricated structural members, trusses, qlu-lam members, indicate materials, details of construction, methods of fastening, and erection details. Include reference to design criteria used and manufacturers design calculations. Submit drawings for all proposed modifications of structural members. Do not proceed with modifications until the submittal has been approved.

1.9.2 Data Required

Submit calculations and drawings for all proposed modifications of structural members. Do not proceed with modifications until the submittal has been approved.

1.9.3 Certificates of Grade

Submit certificates attesting that products meet the grade requirements specified in lieu of grade markings where appearance is important and grade marks will deface material.

1.9.4 Humidity Requirements

Sequence work to minimize use of temporary HVAC to dry out building and control humidity.

1.9.5 Plastic Lumber Performance

Plastic lumber intended for use in exterior applications shall have no fading or discoloration and no change in dimensional stability as tested in accordance with ASTM D1435 for a period of 5 years.

1.10 ENVIRONMENTAL REQUIREMENTS

During and immediately after installation of treated wood, engineered wood products, and laminated wood products at interior spaces, provide temporary ventilation.

1.11 SUSTAINABLE DESIGN REQUIREMENTS

1.11.1 Local/Regional Materials

Use materials or products extracted, harvested, or recovered, as well as manufactured, within a 500 mile radius from the project site, if available from a minimum of three sources.See Section 01 33 29 LEED(tm) DOCUMENTATION for cumulative total local material requirements. Wood and materials may be locally available.

1.11.2 Forest Stewardship Council (FSC) Certification

Use FSC-certified wood where specified. Provide letter of certification signed by lumber supplier. Indicate compliance with FSC STD 01 001 and identify certifying organization. Submit FSC certification numbers; identify each certified product on a line-item basis. Submit copies of invoices bearing the FSC certification numbers.

PART 2 PRODUCTS

2.1 MATERIALS

2.1.1 Virgin Lumber

Lumber fabricated from old growth timber is not permitted. Avoid companies who buy, sell, or use old growth timber in their operations, when possible.

2.1.2 Salvaged Lumber

Provide salvaged lumber where specified. Unless otherwise noted, salvaged lumber shall be delivered clean, denailed, and free of paint, finish materials, and other contamination.

2.1.3 Recovered Lumber

Use recovered lumber where practical. Unless otherwise noted, recovered lumber shall be delivered clean and free of contamination. Provide grading certificates for any recovered wood materials used in structural applications.

2.1.4 Plastic Lumber

HDPE lumber shall contain a minimum of 75 percent recycled content, with a minimum of 25 percent post-consumer recycled content. Mixed plastics and cellulose lumber shall contain a minimum of 25 percent recycled content, with a minimum of _10 percent post-consumer recycled content. HDPE/fiberglass lumber shall contain a minimum of 50 percent recycled content with a minimum of 25 percent post-consumer recycled content. Other mixed resin lumber shall contain a minimum of 95 percent recycled content with a minimum of 50 percent post-consumer recycled content.

2.2 LUMBER

2.3 PLYWOOD, STRUCTURAL-USE, AND ORIENTED STRAND BOARD (OSB) PANELS

APA L870, APA S350, APA E445, and APA F405 respectively.

2.3.1 Combination Subfloor-Underlayment

2.3.1.1 Plywood

Plywood for Electrical and Telecom backboards shall be 3/4 inch fire retartatant. Plywood shall be A-C, FSC-certified.

2.4 OTHER MATERIALS

2.4.1 Miscellaneous Wood Members

2.4.1.1 Wood Bumpers

AREMA Eng Man, Industrial grade cross ties

2.4.1.2 Sill Plates

Sill plates shall be standard or number 2 grade.

2.4.1.3 Blocking

Blocking shall be standard or number 2 grade.

2.4.1.4 Rough Bucks and Frames

Rough bucks and frames shall be straight standard or number 2 grade.

2.4.2 Adhesives

Comply with applicable regulations regarding toxic and hazardous materials, SCAQMD Rule 1168, and as specified. Use water-based adhesives with maximum VOC content of 15 grams/liter for all interior applications. Interior adhesives, sealants, primers and sealants used as filler must meet the requirements of LEED low emitting materials credit.

2.5 ROUGH HARDWARE

Unless otherwise indicated or specified, rough hardware shall be of the type and size necessary for the project requirements. Sizes, types, and spacing of fastenings of manufactured building materials shall be as recommended by the product manufacturer unless otherwise indicated or specified. Rough hardware exposed to the weather or embedded in or in contact with preservative treated wood, exterior masonry, or concrete walls or slabs shall be hot-dip zinc-coated in accordance with ASTM A153/A153M. Nails and fastenings for fire-retardant treated lumber and woodwork exposed to the weather shall be copper alloy or hot-dipped galvanized fasteners as recommended by the treated wood manufacturer.

2.5.1 Bolts, Nuts, Studs, and Rivets

ASME B18.2.1, ASME B18.5.2.1M, ASME B18.5.2.2M and ASME B18.2.2.

2.5.2 Anchor Bolts

ASTM A307, size as indicated, complete with nuts and washers.

2.5.3 Expansion Shields

CID A-A-1923, CID A-A-1924, and CID A-A-1925. Except as shown otherwise,

maximum size of devices shall be 3/8 inch.

2.5.4 Lag Screws and Lag Bolts

ASME B18.2.1.

2.5.5 Wood Screws

ASME B18.6.1.

2.5.6 Nails

ASTM F547, size and type best suited for purpose. For sheathing and subflooring, length of nails shall be sufficient to extend 1 inch into supports. In general, 8-penny or larger nails shall be used for nailing through 1 inch thick lumber and for toe nailing 2 inch thick lumber; 16-penny or larger nails shall be used for nailing through 2 inch thick lumber. Nails used with treated lumber and sheathing shall be hot-dipped galvanized in accordance with ASTM A153/A153M. Nailing shall be in accordance with the recommended nailing schedule contained in AWC WFCM. Where detailed nailing requirements are not specified, nail size and spacing shall be sufficient to develop an adequate strength for the connection. The connection's strength shall be verified against the nail capacity tables in AWC NDS. Reasonable judgment backed by experience shall ensure that the designed connection will not cause the wood to split. If a load situation exceeds a reasonable limit for nails, a specialized connector shall be used.

2.5.7 Wire Nails

ASTM F1667.

2.5.8 Clip Angles

Steel, 3/16 inch thick, size as indicated or best suited for intended use; or zinc-coated steel or iron commercial clips designed for connecting wood members.

PART 3 EXECUTION

3.1 MISCELLANEOUS

3.1.1 Wood Roof Nailers, Edge Strips, Crickets, Curbs, and Cants

Provide sizes and configurations indicated or specified and anchored securely to continuous construction.

3.1.1.1 Roof Edge Strips and Nailers

Provide at perimeter of roof, around openings through roof, and where roofs abut walls, curbs, and other vertical surfaces. Except where indicated otherwise, nailers shall be 6 inches wide and the same thickness as the insulation. Anchor nailers securely to underlying construction. Anchor perimeter nailers in accordance with FM 4435.

3.1.1.2 Crickets, Cants, and Curbs

Provide wood saddles or crickets, cant strips, curbs for scuttles and ventilators, and at expansion joints, as indicated, specified, or necessary

and of lumber or 1/2 inch thick exterior plywood.

3.1.2 Rough Wood Bucks

Size as indicated or 2 inch nominal thickness. Set wood bucks true and plumb. Anchor bucks to concrete or masonry with steel straps extending into the wall 8 inches minimum. Place anchors near the top and bottom of the buck and space uniformly at 2 foot maximum intervals.

3.1.3 Wood Blocking

Provide proper sizes and shapes at proper locations for the installation and attachment of wood and other finish materials, fixtures, equipment, and items indicated or specified.

3.1.4 Wood Grounds

Provide for fastening wood trim, finish materials, and other items to plastered walls and ceilings. Install grounds in proper alignment and true with an 8 foot straightedge.

3.1.5 Wood Furring

Provide where shown and as necessary for facing materials specified. Except as shown otherwise, furring strips shall be nominal one by 3, continuous, and spaced 16 inches o.c. Erect furring vertically or horizontally as necessary. Nail furring strips to masonry. Do not use wood plugs. Provide furring strips around openings, behind bases, and at angles and corners. Furring shall be plumb, rigid, and level and shall be shimmed as necessary to provide a true, even plane with surfaces suitable to receive the finish required. Form furring for offsets and breaks in walls or ceilings on 1 by 4 wood strips spaced 16 inches o.c.

3.1.6 Wood Bumpers

Dress to the sizes indicated, and bevel edges. Bore, countersink, and bolt bumpers in place.

3.1.7 Temporary Centering, Bracing, and Shoring

Provide for the support and protection of masonry work during construction as specified in Section 04 20 00. Forms and centering for cast-in-place concrete work are specified in Section 03 30 00 CAST-IN-PLACE CONCRETE.

3.1.8 Wood Sleepers

Run wood sleepers in lengths as long as practicable and stagger end joints in adjacent rows.

3.1.9 Sill Plates

Sill plates shall be set level and square and anchor bolted at not more than 6 feet on centers and not more than 12 inches from end of each piece. A minimum of two anchors shall be used for each piece.

3.2 WASTE MANAGEMENT

In accordance with the Waste Management Plan and as specified. Separate and reuse scrap sheet materials larger than 2 square feet, framing members larger than 16 inches, and multiple offcuts of any size larger than 16.

Clearly separate damaged wood and other scrap lumber for acceptable alternative uses on site, including bracing, blocking, cripples, ties, and shims.

Separate composite wood from other wood types and recycle or reuse. Set aside scrap and return to manufacturer for recycling into new product. When such a service is not available, local recyclers shall be sought after to reclaim the materials. Fold up metal banding, flatten, and recycle.

Separate treated, stained, painted, and contaminated wood and place in designated area for hazardous materials. Dispose of according to local regulations. Do not leave any wood, shavings, sawdust, or other wood waste buried in fill or on the ground. Prevent sawdust and wood shavings from entering the storm drainage system. Do not burn scrap lumber that has been pressure treated, or lumber that is less than one year old.

-- End of Section --

THIS PAGE HAS BEEN INTENTIONALLY LEFT BLANK

SECTION 06 20 00

FINISH CARPENTRY
02/12

PART 1 GENERAL

1.1 REFERENCES

The publications listed below form a part of this specification to the extent referenced. The publications are referred to within the text by the basic designation only.

AMERICAN LUMBER STANDARDS COMMITTEE (ALSC)

ALSC PS 20 (2010) American Softwood Lumber Standard

ARCHITECTURAL WOODWORK INSTITUTE (AWI)

AWI AWS (2009) Architectural Woodwork Standards

NATIONAL HARDWOOD LUMBER ASSOCIATION (NHLA)

NHLA Rules (2011) Rules for the Measurement & Inspection of Hardwood & Cypress

NORTHEASTERN LUMBER MANUFACTURERS ASSOCIATION (NELMA)

NELMA Grading Rules (2013) Standard Grading Rules for Northeastern Lumber

WEST COAST LUMBER INSPECTION BUREAU (WCLIB)

WCLIB 17 (2004) Standard Grading Rules

WESTERN WOOD PRODUCTS ASSOCIATION (WWPA)

WWPA G-5 (2011) Western Lumber Grading Rules

WINDOW AND DOOR MANUFACTURERS ASSOCIATION (WDMA)

WDMA I.S.4 (2013) Preservative Treatment for Millwork

1.2 SUBMITTALS

Government approval is required for submittals with a "G" designation; submittals not having a "G" designation are for Contractor Quality Control approval. When used, a designation following the "G" designation identifies the office that will review the submittal for the Government. The following shall be submitted in accordance with Section 01 33 00 SUBMITTAL PROCEDURES:

SD-02 Shop Drawings

SD-03 Product Data

SD-04 Samples

Moldings; G, ID NAVFAC Midlant Interior Design

Sample of chair rail, door trim and wood base shall be of sufficient size to show patterns, color ranges, and types, as applicable, of the material proposed to be used.

SD-07 Certificates

Certificates of grade

Certificates of compliance

1.3 DETAIL DRAWINGS

The Contractor shall submit detail drawings showing fabricated items and special mill and woodwork items. Drawings shall indicate materials and details of construction, methods of fastening, erection, and installation.

1.4 CERTIFICATES

Provide certificates of grade from the grading agency on graded but unmarked lumber or plywood attesting that materials meet the grade requirements specified herein.

Provide certificates of compliance unless materials bear certification markings or statements.

1.5 DELIVERY, STORAGE, AND HANDLING

Deliver lumber, plywood, trim, and millwork to job site in an undamaged condition. Stack materials to ensure ventilation and drainage. Protect against dampness before and after delivery. Store materials under cover in a well-ventilated enclosure and protect against extreme changes in temperature and humidity. Do not store products in building until wet trade materials are dry.

1.6 QUALITY ASSURANCE

1.6.1 Lumber

Identify each piece or each bundle of lumber, millwork, and trim by the grade mark of a recognized association or independent inspection agency that is certified by the Board of Review, American Lumber Standards Committee, to grade the species.

1.6.2 Nonpressure-Treated Woodwork and Millwork

Mark, stamp, or label, indicating compliance with WDMA I.S.4.

PART 2 PRODUCTS

2.1 WOOD

2.1.1 Sizes and Patterns of Wood Products

Yard and board lumber sizes shall conform to ALSC PS 20. Provide shaped lumber and millwork in the patterns indicated and standard patterns of the association covering the species. Size references, unless otherwise specified, are nominal sizes, and actual sizes shall be within

manufacturing tolerances allowed by the applicable standard.

2.1.2 Trim, Finish, and Frames

Provide hardwood trim and moulding materials that are to be stained, natural, or transparent finished one grade higher than that listed. Provide species indicated for materials to be transparent finished. Run trim, except window stools and aprons with hollow backs.

Provide two-part Chair-rail Trim; two-part Door Trim, and two-part Base Trim. See architectural drawings for approximate profiles.

TABLE OF GRADES FOR WOOD TO RECEIVE PAINT FINISH		
Grading Rules	Species	Exterior and Interior Trim, Finish, and Frames
WWPA G-5 standard grading rules	Aspen, Douglas Fir-Larch, Douglas Fir South, Engelmann Spruce-Lodgepole Pine, Engelmann Spruce, Hem-Fir, Idaho White Pine, Lodgepole Pine, Mountain Hemlock, Mountain Hemlock-Hem-Fir, Ponderosa Pine-Sugar Pine, (Ponderosa Pine-Lodgepole Pine,) White Woods, (Western Woods,) Western Cedars, Western Hemlock	All Species: C & Btr. Select (Choice & Btr Idaho White Pine) or Superior Finish. Western Red Cedar may be graded C & Btr. Select or A & Btr. per Special Western Red Cedar Rules.
WCLIB 17 standard grading rules	Douglas Fir-Larch, Hem-Fir, Mountain Hemlock, Sitka Spruce, Western Cedars, Western Hemlock	All Species: C & Btr VG, except A for Western Red Cedar
NHLA Rules	Cypress	C-Select
NELMA Grading R standard grading rules	Balsam Fir, Eastern Hemlock-Tamarack, Eastern Spruce, Eastern White Pine, Northern Pine, Northern Pine, Northern White Cedar	All Species: C-Select except C & BTR for Eastern White Pine and Norway Pine

TABLE OF GRADES FOR WOOD TO RECEIVE PAINT FINISH		
Grading Rules	Species	Exterior and Interior Trim, Finish, and Frames
NHLA Rules	Cypress	B Finish
	Red Gum	Select or BTR (for interior use only)
	Soft Elm	
	Birch	

2.2 FABRICATION

2.2.1 Quality Standards (QS)

The terms "Premium," "Custom," and "Economy" refer to the quality grades defined in AWI AWS. Items not specified to be of a specific grade shall be Custom grade. The AWI QS is superseded by all contract document requirements indicated or stated herein.

PART 3 EXECUTION

3.1 FINISH WORK

Provide sizes, materials, and designs as indicated and as specified. Joints shall be tight and constructed in a manner to conceal shrinkage. Miter trim and moldings at exterior angles and cope at interior angles and at returns. Material shall show no warp after installation. Install millwork and trim in maximum practical lengths. Fasten finish work with finish nails. Provide blind nailing where practicable. Set face nails for putty stopping; sand putty smooth prior to application of stain / clear finish.

3.1.1 Interior Finish Work

After installation, sand exposed surfaces smooth. Provide door trim in single lengths.

3.1.2 Door Frames

Set plumb and square. Provide solid blocking at not more than 16 inches o.c. for each jamb. Position blocking to occur behind hinges and lock strikes. Double wedge frames and fasten with finishing nails. Set nails for putty stopping. See architectural door detail for wood door trim surrounding hollow metal door frame.

3.1.3 Chair-rail

Install trim straight and horizontal; where chair-rail terminates at door opening or casework return the chair-rail moulding to the backer board and, if required, miter the backer board so that the bull-nose edge and groove are continuous along the vertical butt edge of the backer board.

3.1.4 Bases

Flat member with a molded top. Fasten base to framing or to grounds. Set one-piece wood base after finish flooring is in place.

3.2 MISCELLANEOUS

3.3 MOLDING AND INTERIOR TRIM

Molding and interior trim shall be installed straight, plumb, level and with closely fitted joints. Exposed surfaces shall be machine sanded at the mill. Molded work shall be coped at returns and interior angles and mitered at external corners. Intersections of flatwork shall be shouldered to ease any inherent changes in plane. Door trim shall be provided in single lengths. Blind nailing shall be used to the extent practicable, and face nailing shall be set and stopped with a nonstaining putty to match the finish applied. Screws shall be used for attachment to metal; setting and stopping of screws shall be of the same quality as required where nails are used.

-- End of Section --

THIS PAGE HAS BEEN INTENTIONALLY LEFT BLANK

SECTION 06 41 16.00 10

LAMINATE CLAD ARCHITECTURAL CASEWORK
08/10

PART 1 GENERAL

1.1 REFERENCES

The publications listed below form a part of this specification to the extent referenced. The publications are referred to within the text by the basic designation only.

AMERICAN NATIONAL STANDARDS INSTITUTE (ANSI)

ANSI A161.2	(1998) Decorative Laminate Countertops, Performance Standards for Fabricated High Pressure

ARCHITECTURAL WOODWORK INSTITUTE (AWI)

AWI AWS	(2009) Architectural Woodwork Standards

ASTM INTERNATIONAL (ASTM)

ASTM F547	(2006; R 2012) Nails for Use with Wood and Wood-Base Materials

BUILDERS HARDWARE MANUFACTURERS ASSOCIATION (BHMA)

ANSI/BHMA A156.9	(2010) Cabinet Hardware

COMPOSITE PANEL ASSOCIATION (CPA)

CPA A208.2	(2009) Medium Density Fiberboard (MDF) for Interior Applications

NATIONAL ELECTRICAL MANUFACTURERS ASSOCIATION (NEMA)

ANSI/NEMA LD 3	(2005) Standard for High-Pressure Decorative Laminates

SCIENTIFIC CERTIFICATION SYSTEMS (SCS)

SCS	Scientific Certification Systems (SCS)Indoor Advantage

U.S. GREEN BUILDING COUNCIL (USGBC)

LEED BD+C	(2009; R 2010) Leadership in Energy and Environmental Design(tm) Building Design and Construction (LEED-NC)

UL ENVIRONMENT (ULE)

ULE Greenguard	UL Greenguard Certification Program

WINDOW AND DOOR MANUFACTURERS ASSOCIATION (WDMA)

WDMA I.S.1A (2011) Interior Architectural Wood Flush Doors

1.2 SYSTEM DESCRIPTION

Work in this section includes laminate clad custom casework cabinets vanity aprons as shown on the drawings and as described in this specification. This Section includes high-pressure laminate surfacing and cabinet hardware. Comply with EPA requirements in accordance with Section 01 33 29 SUSTAINABILITY REPORTING.

1.3 SUSTAINABILITY REPORTING

Materials in this technical specification may contribute towards contract compliance with sustainability requirements. See Section 01 33 29 SUSTAINABILITY REPORTING for project LEED BD+C local/regional materials, and LEED documentation requirements.

1.4 SUBMITTALS

Government approval is required for submittals with a "G" designation; submittals not having a "G" designation are for Contractor Quality Control approval. When used, a designation following the "G" designation identifies the office that will review the submittal for the Government. Submit the following in accordance with Section 01 33 00 SUBMITTAL PROCEDURES:

SD-02 Shop Drawings

Shop Drawings; G, ID NAVFAC MidLant Interior Design
Installation

SD-03 Product Data

Wood Materials; G

Certification

SD-04 Samples

Plastic Laminates; G, ID NAVFAC MidLant Interior Design
Cabinet Hardware; G, ID NAVFAC MidLant Interior Design

SD-07 Certificates

Quality Assurance
Laminate Clad Casework

SD-11 Closeout Submittals

LEED Documentation

1.5 QUALITY ASSURANCE

1.5.1 General Requirements

Unless otherwise noted on the drawings, all materials, construction methods, and fabrication shall conform to and comply with the custom grade

quality standards as outlined in AWI AWS, Section for laminate clad cabinets. These standards shall apply in lieu of omissions or specific requirements in this specification. Contractors and their personnel engaged in the work shall be able to demonstrate successful experience with work of comparable extent, complexity and quality to that shown and specified. Submit a quality control statement which illustrates compliance with and understanding of AWI AWS requirements, in general, and the specific AWI AWS requirements provided in this specification. The quality control statement shall also certify a minimum of ten years Contractor's experience in laminate clad casework fabrication and construction. The quality control statement shall provide a list of a minimum of five successfully completed projects of a similar scope, size, and complexity.

1.5.2 Sustainable Design Certification

Product shall be third party certified in accordance with ULE Greenguard, SCS Scientific Certification Systems Indoor Advantageor equal. Certification shall be performed annually and shall be current.

1.6 DELIVERY, STORAGE, AND HANDLING

Casework may be delivered knockdown or fully assembled. Deliver all units to the site in undamaged condition, stored off the ground in fully enclosed areas, and protected from damage. The storage area shall be well ventilated and not subject to extreme changes in temperature or humidity.

1.7 SEQUENCING AND SCHEDULING

Coordinate work with other trades. Units shall not be installed in any room or space until painting, and ceiling installation are complete within the room where the units are located. Floor cabinets shall be installed before finished flooring materials are installed.

PART 2 PRODUCTS

2.1 WOOD MATERIALS

2.1.1 Lumber

a. All framing lumber shall be kiln-dried Grade III to dimensions as shown on the drawings. Frame front, where indicated on the drawings, shall be nominal 3/4 inch hardwood.

2.1.2 Panel Products

2.1.2.1 Plywood

All plywood panels used for framing purposes shall be veneer core hardwood plywood, AWI AWS Grade AA. Nominal thickness of plywood panels shall be as indicated in this specification and on the drawings.

2.1.2.2 Medium Density Fiberboard

Medium density fiberboard (MDF) shall be an acceptable panel substrate for plastic laminate covered door/drawer fronts.. Medium density fiberboard shall meet the minimum standards listed in CPA A208.2.

2.2 SOLID POLYMER MATERIAL

Solid surfacing casework components shall conform to the requirements of Section 06 61 16 SOLID POLYMER (SOLID SURFACING) FABRICATIONS.

2.3 HIGH PRESSURE DECORATIVE LAMINATE (HPDL)

All plastic laminates shall meet the requirements of ANSI/NEMA LD 3 and ANSI A161.2 for high-pressure decorative laminates. Design, colors, surface finish and texture, and locations shall be as indicated on the drawings . Submit two samples of each plastic laminate pattern and color. Samples shall be a minimum of 5 by 7 inches in size. Plastic laminate types and nominal minimum thicknesses for casework components shall be as indicated in the following paragraphs.

2.3.1 Horizontal General Purpose Standard (HGS) Grade

Horizontal general purpose standard grade plastic laminate shall be 0.048 inches (plus or minus 0.005 inches) in thickness. This laminate grade is intended for horizontal surfaces where postforming is not required.

2.3.2 Vertical General Purpose Standard (VGS) Grade

Vertical general purpose standard grade plastic laminate shall be 0.028 inches (plus or minus 0.004 inches) in thickness. This laminate grade is intended for exposed exterior vertical surfaces of casework components where postforming is not required.

2.3.3 Cabinet Liner Standard (CLS) Grade

Cabinet liner standard grade plastic laminate shall be 0.020 inches in thickness. This laminate grade is intended for light duty semi-exposed interior surfaces of casework components.

2.3.4 Backing Sheet (BK) Grade

Undecorated backing sheet grade laminate is formulated specifically to be used on the backside of plastic laminated panel substrates to enhance dimensional stability of the substrate. Backing sheet thickness shall be 0.020 inches. Backing sheets shall be provided for all laminated casework components where plastic laminate finish is applied to only one surface of the component substrate.

2.4 EDGE BANDING

Edge banding for casework doors and drawer fronts shall be PVC vinyl and shall be 0.125 inch thick. Material width shall be 15/16 inches . Color and pattern shall match exposed door and drawer front laminate pattern and color.

2.5 CABINET HARDWARE

Submit one sample of each cabinet hardware item specified to include hinges, pulls & drawer glides. All hardware shall conform to ANSI/BHMA A156.9, unless otherwise noted, and shall consist of the following components:

a. Door Hinges: Frameless Concealed type, BHMA No. B011602.

b. Cabinet Pulls: Baxk mounted, Aluminum, Satin finish type, BHMA No. B02011.

c. Drawer Slide: Side mounted type, BHMA No. B0505 with full extension and a minimum 100 pound load capacity. Slides shall include an integral stop to avoid accidental drawer removal.

d. Adjustable Shelf Support System:

(1) Recessed (mortised) metal standards, BHMA No. BO4071, finish: Stainless Steel. Support clips for the standards shall be open type, BHMA No. B04091 , finish: Stainless Steel

2.6 FASTENERS

Nails, screws, and other suitable fasteners shall be the size and type best suited for the purpose and shall conform to ASTM F547 where applicable.

2.7 ADHESIVES, CAULKS, AND SEALANTS

2.7.1 Adhesives

Adhesives shall be of a formula and type recommended by AWI. Adhesives shall be selected for their ability to provide a durable, permanent bond and shall take into consideration such factors as materials to be bonded, expansion and contraction, bond strength, fire rating, and moisture resistance. Adhesives shall meet local regulations regarding VOC emissions and off-gassing.

2.7.1.1 Wood Joinery

Adhesives used to bond wood members shall be a Type II for interior use urea-formaldehyde resin formula . Adhesives shall withstand a bond test as described in WDMA I.S.1A.

2.7.1.2 Laminate Adhesive

Adhesive used to join high-pressure decorative laminate to wood shall be adhesive consistent with AWI and laminate manufacturer's recommendations. PVC edgebanding shall be adhered using a polymer-based hot melt glue.

2.7.2 Caulk

Caulk used to fill voids and joints between laminated components and between laminated components and adjacent surfaces shall be clear, 100 percent silicone.

2.7.3 Sealant

Sealant shall be of a type and composition recommended by the substrate manufacturer to provide a moisture barrier at sink cutouts and all other locations where unfinished substrate edges may be subjected to moisture.

2.8 ACCESSORIES

2.9 FABRICATION

Verify field measurements as indicated in the shop drawings before fabrication. Fabrication and assembly of components shall be accomplished

at the shop site to the maximum extent possible. Construction and fabrication of cabinets and their components shall meet or exceed the requirements for AWI custom grade unless otherwise indicated in this specification. Cabinet style, in accordance with AWI AWS, Section 400-G descriptions, shall be flush overlay .

2.9.1 Base and Wall Cabinet Case Body

2.9.1.1 Cabinet Components

Frame members shall be glued-together, kiln-dried hardwood lumber. Top corners, bottom corners, and cabinet bottoms shall be braced with either hardwood blocks or water-resistant glue and nailed in place metal or plastic corner braces. Cabinet components shall be constructed from the following materials and thicknesses:

a. Body Members (Ends, Divisions, Bottoms, and Tops): 3/4 inch veneer core plywoodpanel product.

b. Face Frames and Rails: 3/4 inch hardwood lumber .

c. Shelving: 3/4 inch medium density fiberboard (MDF) panel product.

d. Cabinet Backs: 1/4 inch medium density fiberboard (MDF) panel product.

e. Drawer Sides, Backs, and Subfronts: 1/2 inch hardwood lumber .

f. Drawer Bottoms: 1/4 inch medium density fiberboard (MDF) panel product.

g. Door and Drawer Fronts: 3/4-inch medium density fiberboard (MDF) panel product.

2.9.1.2 Joinery Method for Case Body Members

a. Tops, Exposed Ends, and Bottoms.

(1) Steel "European" assembly screws (1-1/2 inch from end, 5 inch on center, fasteners will not be visible on exposed parts).

(2) Doweled, glued under pressure (approx. 4 dowels per 12 inches of joint).

(3) Spline or biscuit, glued under pressure.

b. Exposed End Corner and Face Frame Attachment.

(1) For mitered joint: lock miter or spline or biscuit, glued under pressure (no visible fasteners).

(2) For non-mitered joint (90 degree): butt joint glued under pressure (no visible fasteners).

(3) Butt joint, glued and nailed.

c. Cabinet Backs (Wall Hung Cabinets): Wall hung cabinet backs must not be relied upon to support the full weight of the cabinet and its anticipated load for hanging/mounting purposes. Method of back joinery and hanging/mounting mechanisms should transfer the load to case body members. Fabrication method shall be:

(1) Full bound, captured in grooves on cabinet sides, top, and bottom. Cabinet backs for floor standing cabinets shall be side bound, captured in grooves; glued and fastened to top and bottom.

(2) Full overlay, plant-on backs with minimum back thickness of 1/2 inchand minimum No. 12 plated (no case hardened) screws spaced a minimum 3 inches on center. Edge of back shall not be exposed on finished sides. Anchor strips are not required when so attached.

(3) Side bound, captured in groove or rabbetts; glued and fastened.

d. Cabinet Backs (Floor Standing Cabinets).

(1) Side bound, captured in grooves; glued and fastened to top and bottom.

(2) Full overlay, plant-on backs with minimum back thickness of 1/2 inch and minimum No. 12 plated (no case hardened) screws spaced a minimum 3 inches on center. Edge of back shall not be exposed on finished sides. Anchor strips are not required when so attached.

(3) Side bound, placed in rabbetts; glued and fastened in rabbetts.

e. Wall Anchor Strips shall be required for all cabinets with backs less than 1/2 inch thick. Strips shall consist of minimum 1/2 inch thick lumber, minimum 2-1/2 inches width; securely attached to wall side of cabinet back - top and bottom for wall hung cabinets, top only for floor standing cabinets.

2.9.2 Cabinet Floor Base

Floor cabinets shall be mounted on a base constructed of nominal 2 inch thick lumber . Base assembly components shall be treated lumber . Finished height for each cabinet base shall be as indicated on the drawings.

2.9.3 Cabinet Door and Drawer Fronts

Door and drawer fronts shall be fabricated from 3/4 inch medium density fiberboard (MDF. All door and drawer front edges shall be surfaced with PVC edgebanding, color and pattern to match exterior face laminate .

2.9.4 Drawer Assembly

2.9.4.1 Drawer Components

Drawer components shall consist of a removable drawer front, sides, backs, and bottom. Drawer components shall be constructed of the following materials and thicknesses:

b. Drawer Sides and Backs For Laminate Finish: 1/2 inch thick 7-ply hardwood veneer core substrate.

d. Drawer Bottom: 1/4 inch thick veneer core panel product for transparent or plastic laminate finish .

2.9.4.2 Drawer Assembly Joinery Method

a. Multiple dovetail (all corners) or French dovetail front/dadoed back, glued under pressure.

b. Doweled, glued under pressure.

c. Lock shoulder, glued and pin nailed.

d. Bottoms shall be set into sides, front, and back, 1/4 inch deep groove with a minimum 3/8 inch standing shoulder.

2.9.5 Shelving

2.9.5.1 General Requirements

Shelving shall be fabricated from 3/4 inch medium density fiberboard (MDF. All shelving top and bottom surfaces shall be finished with HPDL plastic laminate. Shelf edges shall be finished in a PVC edgebanding.

2.9.5.2 Shelf Support System

The shelf support system shall be:

a. Recessed (mortised) metal shelf standards. Standards shall be mortised flush with the finishes surface of the cabinet interior side walls, two per side. Standards shall be positioned and spaced on the side walls to provide a stable shelf surface that eliminates tipping when shelf front is weighted. Standards shall be installed and adjusted vertically to provide a level, stable shelf surface when clips are in place.

2.9.6 Laminate Application

Laminate application to substrates shall follow the recommended procedures and instructions of the laminate manufacturer and ANSI/NEMA LD 3, using tools and devices specifically designed for laminate fabrication and application. Provide a balanced backer sheet (Grade BK) wherever only one surface of the component substrate requires a plastic laminate finish. Apply required grade of laminate in full uninterrupted sheets consistent with manufactured sizes using one piece for full length only, using adhesives specified herein or as recommended by the manufacturer. Fit corners and joints hairline. All laminate edges shall be machined flush, filed, sanded, or buffed to remove machine marks and eased (sharp corners removed). Clean up at easing shall be such that no overlap of the member eased is visible. Fabrication shall conform to ANSI A161.2. Laminate types and grades for component surfaces shall be as follows unless otherwise indicated on the drawings:

a. Base/Wall Cabinet Case Body.

(1) Exterior (exposed) surfaces to include exposed and semi-exposed face frame surfaces: HPDL Grade VGS .

(2) Interior (semi-exposed) surfaces to include interior back wall, bottom, and side walls: HPDL Grade CLS .

b. Adjustable Shelving.

(1) Top and bottom surfaces: HPDL Grade HGS .

(2) All edges: PVC edgebanding.

c. Fixed Shelving.

(1) Top and bottom surfaces: HPDL Grade HGS .

(2) Exposed edges: PVC edgebanding.

d. Door, Drawer Fronts, Access Panels.

(1) Exterior (exposed) and interior (semi-exposed) faces: HPDL Grade VGS

(2) Edges: PVC edgebanding.

e. Drawer Assembly.

All interior and exterior surfaces: HPDL Grade CLS .

f. Tolerances: Flushness, flatness, and joint tolerances of laminated surfaces shall meet the AWI AWS custom grade requirements.

2.9.7 Finishing

2.9.7.1 Filling

No fasteners shall be exposed on laminated surfaces. All nails, screws, and other fasteners in non-laminated cabinet components shall be countersunk and the holes filled with wood filler consistent in color with the wood species.

PART 3 EXECUTION

3.1 INSTALLATION

Installation shall comply with applicable requirements for AWI AWS custom quality standards. Countertops and fabricated assemblies shall be installed level, plumb, and true to line, in locations shown on the drawings. Cabinets and other laminate clad casework assemblies shall be attached and anchored securely to the floor and walls with mechanical fasteners that are appropriate for the wall and floor construction.

3.1.1 Anchoring Systems

3.1.1.1 Floor

Base cabinets shall utilize a floor anchoring system as detailed on the drawings. Anchoring and mechanical fasteners shall not be visible from the finished side of the casework assembly. Cabinet assemblies shall be attached to anchored bases without visible fasteners as indicated in the drawings. Where assembly abuts a wall surface, anchoring shall include a minimum 1/2 inch thick lumber or panel product hanging strip, minimum 2-1/2 inch width; securely attached to the top of the wall side of the cabinet back.

3.1.1.2 Wall

Cabinet and vanity to be wall mounted shall utilize minimum 1/2 inch thick lumber or panel product hanging strips, minimum 2-1/2 inch width; securely attached to the wall side of the cabinet back, both top and bottom.

3.1.2 Countertops

Solid Surface Countertops shall conform to the requirements of Section 06 61 16 Solid Polymer (Solid Surfacing) Fabrications.

3.1.3 Hardware

Casework hardware shall be installed in types and locations as indicated on the drawings. Where fully concealed European-style hinges are specified to be used with particleboard or fiberboard doors, the use of plastic or synthetic insertion dowels shall be used to receive 3/16 inch "Euroscrews". The use of wood screws without insertion dowels is prohibited.

3.1.4 Doors, Drawers and Removable Panels

The fitting of doors, drawers and removable panels shall be accomplished within target fitting tolerances for gaps and flushness in accordance with AWI AWS custom grade requirements.

3.1.5 Plumbing Fixtures

Install sinks, sink hardware, and other plumbing fixtures in locations as indicated on the drawings and in accordance with Section 22 00 00 PLUMBING, GENERAL PURPOSE .

-- End of Section --

SECTION 06 61 16

SOLID POLYMER (SOLID SURFACING) FABRICATIONS
08/10

PART 1 GENERAL

1.1 REFERENCES

The publications listed below form a part of this specification to the extent referenced. The publications are referred to within the text by the basic designation only.

ASTM INTERNATIONAL (ASTM)

ASTM D2583	(2013a) Indentation Hardness of Rigid Plastics by Means of a Barcol Impressor
ASTM D570	(1998; E 2010; R 2010) Standard Test Method for Water Absorption of Plastics
ASTM D638	(2014) Standard Test Method for Tensile Properties of Plastics
ASTM E84	(2015b) Standard Test Method for Surface Burning Characteristics of Building Materials
ASTM G21	(2015) Determining Resistance of Synthetic Polymeric Materials to Fungi

INTERNATIONAL ASSOCIATION OF PLUMBING AND MECHANICAL OFFICIALS (IAPMO)

IAPMO Z124.3	(2005) Plastic Lavatories
IAPMO Z124.6	(2007) Plastic Sinks

NATIONAL ELECTRICAL MANUFACTURERS ASSOCIATION (NEMA)

ANSI/NEMA LD 3	(2005) Standard for High-Pressure Decorative Laminates

NSF INTERNATIONAL (NSF)

NSF/ANSI 51	(2012) Food Equipment Materials

TILE COUNCIL OF NORTH AMERICA (TCNA)

TCNA Hdbk	(2013) Handbook for Ceramic, Glass, and Stone Tile Installation

U.S. GREEN BUILDING COUNCIL (USGBC)

LEED NC	(2009) Leadership in Energy and Environmental Design(tm) New Construction Rating System

1.2 SYSTEM DESCRIPTION

a. Work under this section includes counter tops and backsplashes and other items utilizing solid polymer (solid surfacing) fabrication as shown on the drawings and as described in this specification. Do not change source of supply for materials after work has started, if the appearance of finished work would be affected.

b. In most instances, installation of solid polymer fabricated components and assemblies will require strong, correctly located structural support provided by other trades. To provide a stable, sound, secure installation, close coordination is required between the solid polymer fabricator/installer and other trades to ensure that necessary structural wall support, cabinet counter top structural support, proper clearances, and other supporting components are provided for the installation of wall panels, countertops, shelving, and all other solid polymer fabrications to the degree and extent recommended by the solid polymer manufacturer.

c. Appropriate staging areas for solid polymer fabrications. Allow variation in component size and location of openings of plus or minus 1/8 inch.

1.3 SUSTAINABILITY REQUIREMENTS

Materials in this technical specification may contribute towards contract compliance with sustainability requirements.

1.3.1 LEED REQUIREMENTS

See Section 01 33 29 LEED DOCUMENTATION for project LEED NC local/ regional materials and recycled content requirements.

1.4 SUBMITTALS

Government approval is required for submittals with a "G" designation; submittals not having a "G" designation are for Contractor Quality Control approval. When used, a designation following the "G" designation identifies the office that will review the submittal for the Government. Submit the following in accordance with Section 01 33 00 SUBMITTAL PROCEDURES:

SD-02 Shop Drawings

Detail Drawings; G, ID NAVFAC MidLant Interior Design
Installation; G

SD-03 Product Data

Solid polymer material
Qualifications
Fabrications

SD-04 Samples

Material; G, ID NAVFAC MidLant Interior Design

SD-06 Test Reports

Solid polymer material

SD-07 Certificates

Fabrications
Qualifications

SD-10 Operation and Maintenance Data

Clean-up

SD-11 Closeout Submittals

LEED Documentation

1.5 QUALITY ASSURANCE

1.5.1 Qualifications

To ensure warranty coverage, solid polymer fabricators shall be certified to fabricate by the solid polymer material manufacturer being utilized. Mark all fabrications with the fabricator's certification label affixed in an inconspicuous location. Fabricators shall have a minimum of 5 years of experience working with solid polymer materials. Submit solid polymer manufacturer's certification attesting to fabricator qualification approval.

1.5.2 Mock-ups

Submit Detail Drawings indicating locations, dimensions, component sizes, fabrication and joint details, attachment provisions, installation details, and coordination requirements with adjacent work.

1.6 DELIVERY, STORAGE, AND HANDLING

Do not deliver materials to project site until areas are ready for installation. Deliver components and materials to the site undamaged, in containers clearly marked and labeled with manufacturer's name. Materials shall be stored indoors and adequate precautions taken to prevent damage to finished surfaces. Provide protective coverings to prevent physical damage or staining following installation, for duration of project.

1.7 WARRANTY

Provide manufacturer's warranty of ten years against defects in materials, excluding damages caused by physical or chemical abuse or excessive heat. Warranty shall provide for material and labor for replacement or repair of defective material for a period of ten years after component installation.

PART 2 PRODUCTS

2.1 MATERIAL

Provide solid polymer material that is a homogeneous filled solid polymer; not coated, laminated or of a composite construction; meeting IAPMO Z124.3 and IAPMO Z124.6 requirements. Material shall have minimum physical and performance properties specified. Superficial damage to a depth of 0.01 inch shall be repairable by sanding or polishing. Material thickness shall be as indicated on the drawings. In no case shall material be less than 1/4 inch in thickness. Submit a minimum 4 by 4 inch sample of each color

and pattern for approval. Samples shall indicate full range of color and pattern variation. Approved samples shall be retained as a standard for this work. Submit test report results from an independent testing laboratory attesting that the submitted solid polymer material meets or exceeds each of the specified performance requirements.

2.1.1 Cast, 100 Percent Acrylic Polymer Solid Surfacing Material

SS-2: Cast, 100 percent acrylic solid polymer material shall be composed of acrylic polymer, mineral fillers, and pigments and shall meet the following minimum performance requirements:

PROPERTY	REQUIREMENT (min. or max.)	TEST PROCEDURE
Tensile Strength	4000 psi (min..)	ASTM D638
Hardness	55-Barcol Impressor (min.)	ASTM D2583
Thermal Expansion	.000023 in/in/F (max.)	ASTM D 696
Boiling Water Surface Resistance	No Change	ANSI/NEMA LD 3-3.05
High Temperature Resistance	No Change	ANSI/NEMA LD 3-3.06
Impact Resistance (Ball drop)		ANSI/NEMA LD 3-303
1/4 inch sheet	36 inches, 1/2 lb ball, no failure	
1/2 inch sheet	144 inches, 1/2 lb ball, no failure	
Mold & Mildew Growth	No growth	ASTM G21
Bacteria Growth	No growth	ASTM G21
Liquid Absorption (Weight in 24 hrs.)	0.1 percent max.	ASTM D570
Flammability		ASTM E84
Flame Spread	25 max.	
Smoke Developed	30 max.	
Sanitation	"Food Contact" approval	NSF/ANSI 51

2.1.2 Material Patterns and Colors

Patterns and colors for all solid polymer components and fabrications shall be those indicated on the project drawings. Pattern and color shall occur, and shall be consistent in appearance, throughout the entire depth (thickness) of the solid polymer material.

2.1.3 Surface Finish

Exposed finished surfaces and edges shall receive a uniform appearance. Exposed surface finish shall be matte; gloss rating of 5-20.

2.2 ACCESSORY PRODUCTS

Accessory products, as specified below, shall be manufactured by the solid polymer manufacturer or shall be products approved by the solid polymer manufacturer for use with the solid polymer materials being specified.

2.2.1 Seam Adhesive

Seam adhesive shall be a two-part adhesive kit to create permanent, inconspicuous, non-porous, hard seams and joints by chemical bond between solid polymer materials and components to create a monolithic appearance of the fabrication. Adhesive shall be approved by the solid polymer manufacturer. Adhesive shall be color-matched to the surfaces being bonded where solid-colored, solid polymer materials are being bonded together. The seam adhesive shall be clear or color matched where particulate patterned, solid polymer materials are being bonded together.

2.2.2 Panel Adhesive

Panel adhesive shall be neoprene based panel adhesive meeting TCNA Hdbk, Underwriter's Laboratories (UL) listed. Use this adhesive to bond solid polymer components to adjacent and underlying substrates.

2.2.3 Silicone Sealant

Sealant shall be a mildew-resistant, FDA and OSHA Nationally Recognized Testing Laboratory (NRTL) listed silicone sealant or caulk in a clear formulation. The silicone sealant shall be approved for use by the solid polymer manufacturer. Use sealant to seal all expansion joints between solid polymer components and all joints between solid polymer components and other adjacent surfaces such as walls, floors, ceiling, and plumbing fixtures.

2.2.4 Mounting Hardware

Provide mounting hardware, including sink/bowl clips, inserts and fasteners for attachment of undermount sinks and lavatories.

2.3 FABRICATIONS

Components shall be factory or shop fabricated to sizes and shapes indicated, to the greatest extent practical, in accordance with approved Shop Drawings and manufacturer's requirements. Provide factory cutouts for sinks, lavatories, and plumbing fixtures where indicated on the drawings. Contours and radii shall be routed to template, with edges smooth. Defective and inaccurate work will be rejected. Submit product data indicating product description, fabrication information, and compliance

with specified performance requirements for solid polymer, joint adhesive, and sealants Both the manufacturer of materials and the fabricator shall submit a detailed description of operations and processes in place that support efficient use of natural resources, energy efficiency, emissions of ozone depleting chemicals, management of water and operational waste, indoor environmental quality, and other production techniques supporting sustainable design and products.

2.3.1 Joints and Seams

Form joints and seams between solid polymer components using manufacturer's approved seam adhesive. Joints shall be inconspicuous in appearance and without voids to create a monolithic appearance.

2.3.2 Edge Finishing

Rout and finish component edges to a smooth, uniform appearance and finish. Edge shapes shall be a half bullnose. Rout all cutouts, then sand all edges smooth. Repair or reject defective or inaccurate work.

2.3.3 Vanity Top Splashes

Fabricate backsplashes and end splashes for vanity tops from 1/2 inch thick solid surfacing material to be in conformance with dimensions and shapes as indicated on the drawings. Backsplashes shall be scribed to the wall, shop fabricated and be integral to the counter.

2.3.3.1 End Splashes

End splashes shall be provided loose for installation at the jobsite after horizontal surfaces to which they are to be attached have been installed.

2.3.4 Counter and Vanity Tops

Fabricate all solid surfacing, solid polymer counter top and vanity top components from 1/2 inch thick material. Dimensions, locations, and quantities shall be as indicated on the Drawings. Edge detail shall be a half bullnose. Counter tops shall be complete with full height backsplashes and endsplashes. Refer to 2.3.3 for vanity splash requirements. Attach 2 inch wide reinforcing strip of polymer material under each horizontal counter top seam. Submit a minimum 1 foot wide by 6 inch deep, full size sample for each type of counter top shown on the project drawings. The sample shall include the edge profile and backsplash as detailed on the project drawings. Solid polymer material shall be of a pattern and color as indicated on the drawings. Sample shall include at least one seam. Approved sample shall be retained as standard for this work.

2.3.4.1 Counter Top With Sink

a. Stainless Steel Sink. Countertops with sinks shall include cutouts to template as furnished by the sink manufacturer. Manufacturer's standard sink mounting hardware for stainless steel installation shall be provided. Seam between sink and counter top shall be sealed with silicone sealant. Sink, faucet, and plumbing requirements shall be in accordance with Section 22 00 00 PLUMBING,GENERAL PURPOSE.

2.3.4.2 Vanity Tops With Bowls

a. Solid polymer bowls shall be a solid polymer manufacturer's standard, pre-molded product specifically designed for attachment to solid polymer counter tops.

2.3.5 Solid Polymer Vanity Bowls

Solid polymer vanity bowls shall be of the same polymer composition as the adjoining counter top. Bowl design shall support a seam adhesive flush installation method. Bowl dimensions shall be as indicated on the drawings .

PART 3 EXECUTION

3.1 INSTALLATION

3.1.1 Components

Install all components and fabricated units plumb, level, and rigid. Make field joints between solid polymer components using solid polymer manufacturer's approved seam adhesives, to provide a monolithic appearance with joints inconspicuous in the finished work. Attach metal sinks and lavatory bowls to counter tops using solid polymer manufacturer's recommended clear silicone sealant and mounting hardware. Solid polymer bowls shall be installed using a color-matched seam adhesive. Plumbing connections to sinks and lavatories shall be made in accordance with Section 22 00 00 PLUMBING, GENERAL PURPOSE .

3.1.1.1 Loose Counter Top Splashes

Mount loose splashes in the locations noted on the drawings. Loose splashes shall be adhered to the counter top with a color matched silicone sealant when the solid polymer components are solid colors. Use a clear silicone sealant to provide adhesion of particulate patterned solid polymer splashes to counter tops.

3.1.2 Silicone Sealant

Use a clear, silicone sealant or caulk to seal all expansion joints between solid polymer components and all joints between solid polymer components and other adjacent surfaces such as walls, floors, ceiling, and plumbing fixtures. Sealant bead shall be smooth and uniform in appearance and shall be the minimum size necessary to bridge any gaps between the solid surfacing material and the adjacent surface. Bead shall be continuous and run the entire length of the joint being sealed.

3.1.3 Plumbing

Make plumbing connections to sinks and lavatories in accordance with Section 22 00 00 PLUMBING, GENERAL PURPOSE .

3.2 CLEAN-UP

Components shall be cleaned after installation and covered to protect against damage during completion of the remaining project items. Components damaged after installation by other trades will be repaired or replaced at the General Contractor's cost. Component supplier will provide a repair/replace cost estimate to the General Contractor who shall approve estimate before repairs are made. Submit a minimum of six copies of

maintenance data indicating manufacturer's care, repair and cleaning instructions. Maintenance video shall be provided,if available. Maintenance kit for matte finishes shall be submitted.

-- End of Section --

SECTION 07 11 13

BITUMINOUS DAMPPROOFING
08/11

PART 1 GENERAL

1.1 REFERENCES

The publications listed below form a part of this specification to the extent referenced. The publications are referred to within the text by the basic designation only.

ASTM INTERNATIONAL (ASTM)

ASTM C208	(2012) Cellulosic Fiber Insulating Board
ASTM C728	(2015) Perlite Thermal Insulation Board
ASTM D1187/D1187M	(1997; E 2011; R 2011) Asphalt-Base Emulsions for Use as Protective Coatings for Metal
ASTM D1227	(2013) Emulsified Asphalt Used as a Protective Coating for Roofing
ASTM D226/D226M	(2009) Standard Specification for Asphalt-Saturated Organic Felt Used in Roofing and Waterproofing
ASTM D227/D227M	(2003; R 2011; E 2012) Coal-Tar-Saturated Organic Felt Used in Roofing and Waterproofing
ASTM D41/D41M	(2011) Asphalt Primer Used in Roofing, Dampproofing, and Waterproofing
ASTM D4263	(1983; R 2012) Indicating Moisture in Concrete by the Plastic Sheet Method
ASTM D4479/D4479M	(2007; E 2012; R 2012) Asphalt Roof Coatings - Asbestos-Free
ASTM D449/D449M	(2003; R 2014; E 2014) Asphalt Used in Dampproofing and Waterproofing

1.2 SUBMITTALS

Government approval is required for submittals with a "G" designation; submittals not having a "G" designation are for Contractor Quality Control approval. The following shall be submitted in accordance with Section 01 33 00 SUBMITTAL PROCEDURES:

SD-07 Certificates

Materials

1.3 DELIVERY AND STORAGE

Deliver materials in sealed containers bearing manufacturer's original labels. Labels shall include date of manufacture, contents of each container, performance standards that apply to the contents and recommended shelf life.

PART 2 PRODUCTS

2.1 ASPHALT

ASTM D449/D449M, Type I or Type II.

2.2 ASPHALT PRIMER

ASTM D41/D41M.

2.3 FIBROUS ASPHALT

ASTM D4479/D4479M, Type I for horizontal surfaces, Type II for vertical surfaces.

2.4 EMULSION-BASED ASPHALT DAMPPROOFING

2.4.1 Fibrated Emulsion-Based Asphalt

Fibrated emulsion-based asphalt dampproofing shall be cold-applied type conforming to ASTM D1227 Type II, Class 1, asbestos-free, manufactured of refined asphalt, emulsifiers and selected clay, fibrated with mineral fibers. For spray or brush application, emulsion shall contain a minimum of 59 percent solids by weight, 56 percent solids by volume. For trowel application, emulsion shall contain a minimum of 58 percent solids by weight, 55 percent solids by volume.

2.4.2 Non-Fibrated Emulsion-Based Asphalt

Non-fibrated emulsion-based asphalt dampproofing shall be cold-applied type conforming to ASTM D1187/D1187M Type II or ASTM D1227 Type III, manufactured of refined asphalt, emulsifiers and selected clay. Asphalt shall contain a minimum 58 percent solids by weight, 55 percent solids by volume.

2.5 SURFACE PROTECTION

2.5.1 Saturated Felt

ASTM D226/D226M, Asphalt Saturated, Type I, 15 pound; ASTM D227/D227M, Coal-Tar Saturated.

2.5.2 Protection Board

Wood Fiber Board, ASTM C208, or Perlite Board, ASTM C728.

PART 3 EXECUTION

3.1 SURFACE PREPARATION

Remove or cut form ties and repair all surface defects as required in Section 03 30 00 CAST-IN-PLACE CONCRETE. Clean concrete and masonry

surfaces to receive dampproofing of foreign matter and loose particles. Apply dampproofing to clean dry surfaces. Moisture test in accordance with ASTM D4263. If test indicates moisture, allow a minimum of 7 additional days after test completion for curing. If moisture still exists, redo test until substrate is dry.

3.1.1 Metal Surfaces

Metal surfaces shall be dry and be free of rust, scale, loose paint, oil, grease, dirt, frost and debris.

3.2 Protection of Surrounding Areas

Before starting the dampproofing work, the surrounding area and surfaces shall be protected from spillage and migration of dampproofing material onto other work. Drains and coductiors shall be protected from clogging with dampproofing material.

3.3 APPLICATION

Use either hot-application or cold-application method. Use cold-application method in confined spaces where hot bitumen would be hazardous. Apply dampproofing after priming coat is dry, but prior to any deterioration of primed surface, and when ambient temperature is above 40 degrees F.

3.3.1 Surface Priming

Prime surfaces to receive asphalt or . Apply primer when ambient temperature is above 40 degrees F and at rate of approximately one gallon per 100 square feet, fully covering entire surface to be dampproofed.

3.3.2 Cold-Application Method

3.3.2.1 Fibrous Asphalt

Apply two coats of fibrous asphalt to surfaces to be dampproofed. Apply each coat uniformly using not less than one gallon fibrous asphalt per 50 square feet. Apply first coat by brush or spray to provide full bond with primed surface. Brush or spray second coat over thoroughly dry first coat unless recommended otherwise by dampproofing materials manufacturer. Provide finished surface that is of uniform thickness and impervious to moisture. Recoat porous areas.

3.3.2.2 Emulsion-Based Asphalt

Emulsion-based asphalt dampproofing work shall not be performed in temperatures below 40 degrees F. Emulsions shall have a smooth and uniform consistency at time of application. Dampproofing materials shall be applied in accordance with manufacturer's published instructions to produce a smooth uniform dry film of not less than 12 mils thick without voids or defects. Dull or porous spots shall be recoated. Dampproofing materials shall seal tightly around pipes and other items projecting through dampproofing. Rates of application shall be as follows:

a. Primer: 1/2 gallon per 100 square feet, cold-applied.

b. Fibrated Dampproofing: 2 gallons per 100 square feet, cold-applied

with spray, brush or trowel.

c. Non-fibrated Dampproofing: 2 gallons per 100 square feet, cold-applied with spray, brush or trowel.

3.4 PROTECTIVE COVERING

Protect dampproofed surfaces against which backfill will be placed with one layer of 15 pound saturated felt conforming to the requirements specified herein. Use asphalt-saturated felt where the dampproofing material is asphalt and use coal-tar-saturated felt where the dampproofing material is coal-tar pitch. Embed felts in the second coating of bitumen and lap edges and ends not less than one inch. In lieu of saturated felt 1/2 inch thick wood fiberboard or perlite board may be used.

-- End of Section --

SECTION 07 13 53

ELASTOMERIC SHEET WATERPROOFING
04/06

PART 1 GENERAL

1.1 REFERENCES

The publications listed below form a part of this specification to the extent referenced. The publications are referred to within the text by the basic designation only.

ASTM INTERNATIONAL (ASTM)

ASTM D1149	(2007; R 2012) Standard Test Method for Rubber Deterioration - Surface Ozone Cracking in a Chamber
ASTM D146/D146M	(2004; E 2012; R 2012) Sampling and Testing Bitumen-Saturated Felts and Woven Fabrics for Roofing and Waterproofing
ASTM D1876	(2008; R 2015; E 2015) Standard Test Method for Peel Resistance of Adhesives (T-Peel Test)
ASTM D2240	(2005; R 2010) Standard Test Method for Rubber Property - Durometer Hardness
ASTM D297	(2015) Rubber Products - Chemical Analysis
ASTM D41/D41M	(2011) Asphalt Primer Used in Roofing, Dampproofing, and Waterproofing
ASTM D412	(2006a; R 2013) Standard Test Methods for Vulcanized Rubber and Thermoplastic Elastomers - Tension
ASTM D471	(2015a) Standard Test Method for Rubber Property - Effect of Liquids
ASTM D5385	(1993; R 2006) Hydrostatic Pressure Resistance of Waterproofing Membranes
ASTM D570	(1998; E 2010; R 2010) Standard Test Method for Water Absorption of Plastics
ASTM D573	(2004; R 2010) Standard Test Method for Rubber - Deterioration in an Air Oven
ASTM D624	(2000; R 2012) Tear Strength of Conventional Vulcanized Rubber and Thermoplastic Elastomers
ASTM D746	(2013) Standard Test Method for Brittleness Temperature of Plastics and

	Elastomers by Impact
ASTM D903	(1998; R 2010) Peel or Stripping Strength of Adhesive Bonds
ASTM E154/E154M	(2008a; R 2013; E 2013) Water Vapor Retarders Used in Contact with Earth Under Concrete Slabs, on Walls, or as Ground Cover
ASTM E96/E96M	(2014) Standard Test Methods for Water Vapor Transmission of Materials

1.2 SUBMITTALS

Government approval is required for submittals with a "G" designation; submittals not having a "G" designation are for Contractor Quality Control approval. The following shall be submitted in accordance with Section 01 33 00 SUBMITTAL PROCEDURES:

SD-03 Product Data

Elastomeric waterproofing sheet material

Protection board

Primers, adhesives, and mastics

SD-04 Samples

Materials

Submit material samples showing resolution of corner and field conditions, attachment to existing waterproof sheeting.

SD-06 Test Reports

Elastomeric waterproofing sheet material

Certify compliance with performance requirements specified herein.

Field Quality Control

Verification Of Conditions

Protective Covering

SD-08 Manufacturer's Instructions

Primers, adhesives, and mastics

Submit Manufacturer's material safety data sheets for primers, adhesives and mastics.

1.3 QUALITY ASSURANCE

1.3.1 Shop Drawing Requirements

Include description and physical properties; termination details;

application details; recommendations regarding shelf life, application procedures; requirements for protective covering; and precautions for flammability and toxicity.

1.4 DELIVERY, STORAGE, AND HANDLING

Deliver and store materials out of the weather, in manufacturer's original packaging with brand name and product identification clearly marked. Do not permit uncertified materials in the work area.

1.5 ENVIRONMENTAL CONDITIONS

Do not apply waterproofing during inclement weather or when there is ice, frost, surface moisture, or visible dampness on the surface to receive waterproofing and when ambient and surface temperatures are 40 degrees F or below. The restriction on the application of waterproofing materials when ambient and surface temperatures are below 40 degrees F will be waived if the Contractor devises a means, approved by the Contracting Officer, of maintaining the surface and ambient temperatures above 40 degrees F.

PART 2 PRODUCTS

2.1 MATERIALS

Provide one of the types of elastomeric waterproofing sheet material and related primers, adhesives, and mastics as specified herein. Ensure compatibility of waterproofing materials within a specific type, with each other, and with the materials on which they will be applied. Materials shall conform to the applicable performance requirements cited below when tested in accordance with the referenced ASTM publications.

2.2 BUTYL RUBBER SHEETING

Not less than 60 mils minimum thickness.

2.2.1 Butyl Rubber Sheeting Performance Requirements

a. Thickness Tolerance, ASTM D412: Plus or minus 10 percent;

b. Specific Gravity, ASTM D297: 1.20, plus or minus 0.05;

c. Tensile Strength, ASTM D412: 1200 psiminimum;

d. Tensile Stress at 300 percent elongation, ASTM D412: 600 psi minimum;

e. Elongation, ASTM D412: 300 percent minimum;

f. Tear Resistance, Die C, ASTM D624: 150 pound force per inch (lbf/inch) minimum;

g. Shore A Hardness, ASTM D2240: Five-second interval before reading; 60 plus or minus 10;

h. Ozone Resistance, ASTM D1149: No cracks, 7 days - 50 pphm - 100 degrees F, 20 percent elongation;

i. Heating Aging-Accelerated, ASTM D573: Tensile retention, 60 percent of minimum original elongation retention; 60 percent of minimum original requirement; 7 days, 240 degrees F;

j. Butyl Identification, ASTM D471, Tricresyl Phosphate Immersion: Maximum volume swell 10 percent, 70 hrs, 212 degrees F;

k. Low Temperature Flexibility, ASTM D746: No failure at minus 40 degrees F;

l. Water Absorption, ASTM D471: plus 1 percent maximum. 7 days, 158 degrees F;

m. Exposure to Fungi and Bacteria in Soil, ASTM E154/E154M, Minimum 16 Weeks: Unaffected; and

n. Water Vapor Transmission, 80 Degrees FPermeance, ASTM E96/E96M, Procedure B or BW: 0.15 perms maximum.

2.2.2 Adhesive, Cement, and Tape for Use with Butyl Rubber

As recommended by the butyl rubber waterproofing membrane manufacturer.

2.3 COMPOSITE, SELF-ADHERING MEMBRANE SHEETING

Cold applied composite sheet consisting of rubberized asphalt and cross laminated, high density polyethylene film. Not less than 60 mils minimum thickness is required.

2.3.1 Composite, Self-Adhering Sheeting Performance Requirements

a. Tensile Strength, ASTM D412, Die C: 250 psi minimum;

b. Ultimate Elongation, ASTM D412, Die C: 200 percent minimum;

c. Water Vapor Transmission,ASTM E96/E96M 80 Degrees F Permeance, Procedure B: 0.1 perm maximum;

d. Pliability Degrees F, ASTM D146/D146M: (180 Degrees Bend Over One Inch Mandrel): No cracks at minus 25 degrees F;

e. Cycling Over Crack at minus 15 Degrees F: Membrane is applied and rolled across two primed concrete blocks with no separation between blocks. Crack opened and closed from zero to 1/4 inch. No effect at 100 cycles;

f. Puncture Resistance, ASTM E154/E154M: 40 lb. minimum;

g. Lap Adhesion at Minimum Application Temperature, ASTM D1876 Modified, 880 N/m (5 lbs/in.);

h. Peel Strength, ASTM D903: Modified 9 lbs/n;

i. Resistance to Hydrostatic Head, ASTM D5385: 231 ft of water

j. Water Absorption, ASTM D570; 0.1 percent maximum.

2.3.2 Primer

Asphalt composition, ASTM D41/D41M, or synthetic polymer in solvent as recommended by the membrane manufacturer.

2.3.3 Mastic

Polymer modified asphalt in suitable solvent of trowel-grade consistency and as recommended by the membrane manufacturer.

2.4 Protection Board

Provide protection board that is compatible with the waterproofing membrane.

PART 3 EXECUTION

3.1 VERIFICATION OF CONDITIONS

Before starting the work, verify that surfaces to be waterproofed are in satisfactory condition. Notify the Contracting Officer of defects or conditions that will prevent a satisfactory application. Do not start application until defects and conditions have been corrected.

3.2 SURFACE PREPARATION

Ensure surfaces to be treated are clean, dry, smooth, and free from deleterious materials and projections. Thoroughly wet holes, joints, cracks, and voids in masonry and concrete with water and fill with Portland cement mortar, strike flush, and permit to dry. Cut off high spots or grind smooth. Finish top surfaces of projecting masonry or concrete ledges below grade, except footings, to a steep bevel with Portland cement mortar. Sweep surfaces to be covered before applying waterproofing to remove dust and foreign matter. Cure concrete by a method compatible with the waterproofing system.

3.3 APPLICATION

Follow manufacturer's printed installation instructions. Where indicated, mop continuous cant strips in place at vertical and horizontal corners before installing the waterproofing membrane. Do not use untreated wood or wood fiber cants. When using solvent welding liquid, avoid prolonged contact with skin and breathing of vapor. Provide adequate ventilation. Carry waterproofing of horizontal surfaces up abutting vertical surfaces as indicated and adhere solid to the substrate. Avoid wrinkles and buckles in applying membrane and joint reinforcement.

a. Non-Self-Adhering Membrane: Unroll membrane and allow to remain flat for at least one-half hour before application. Apply an asphalt concrete primer prior to application of asphaltic adhesive. Where solvent adhesive is applied, allow major portion of solvent to evaporate so that bonding adhesive does not stick to a dry finger touching it. Apply elastomeric waterproofing membrane in a full bed of adhesive at a uniform coverage rate in accordance with the recommendations in the membrane manufacturer's printed instructions. Where membrane on horizontal surfaces are to receive concrete fill, apply adhesive in 4 inch wide strips at 2 feet on center. Pull membrane tight without stretching. As soon as adhesive is fully set and dry, recheck lap splices. Where openings or fishmouths appear, reseal and reroll lap splices.

b. Self-Adhering Membrane: Apply composite, self-adhering membrane on surfaces primed at a uniform coverage rate in accordance with membrane manufacturer's printed instructions. Remove release sheet and apply

with tacky surface in contact with dried primer.

c. Protection: Protect membrane over horizontal surfaces from abnormal traffic during installation. Use only equipment with rubber tires. Provide walkway protection where heavy traffic from other trades is expected. Do not store material on membrane.

3.3.1 Butyl Rubber

Lap sheets at sides and ends a minimum of 6 inches over the preceding sheet. Apply lap splicing cement over entire 6 inches splice area prior to application of sealant. Sealant shall be continuous along the entire length of the splice. Maintain a continuous bead of sealant at all membrane splices or as required by the manufacturer. When membrane will be below water table, provide a tongue and groove cemented splice a minimum of 6 inches with factory made heat vulcanized seam not less than 2 inches or as required by the manufacturer.

3.3.2 Thermoplastic Membrane (PVC)

Deck shall be clean, smooth and dry without surface irregularities. Consult with membrane manufacturer prior to grid application. Install 12 inches wide sub-membrane containment grid as required by manufacturer. Provide and install the containment grid at intervals across the width and length of the substrate, at the base of all transitions, walls, curbs, penetrations, and at the perimeter of each deck/substrate section. Fully adhere strips to the deck in a full bedding of two-part urethane adhesive medium. Adjacent sheets shall be welded in accordance with manufacturer's instructions. All side and end lap joints shall be hot-air welded. Lap area shall be a minimum of 3 inch wide when machine welding, and a minimum of 4 inch wide when hand welding but not less than recommended by the manufacturer. Overlaps shall be with the flow of water.

3.4 Composite, Self-Adhering Membrane

Lap sheets at edges and ends a minimum of 2-1/2 inches over the preceding sheet. All side laps shall be minimum 2-1/2 inchesand end laps shall be 5 inches. Laps shall be self adhesive, mastic as per manufacturer's recommendation. Roll or firmly press to adhere membrane to substrate. Cover corners and joints with two layers of reinforcement by first applying a 12 inch width of membrane centered along the axis. Flash drains and projections with a second ply of membrane for a distance of 6 inches from the drain or projection. Finish exposed, terminated edges of membrane on horizontal or vertical surfaces with a trowelled bead of mastic. Apply mastic around edges of membrane, and drains and projections. Apply mastic at end of each work day.

3.5 FLASHING

Flash penetrations through membrane. Ensure that where reinforcing bars penetrate a waterproofing membrane, each of those penetrations be sealed with the appropriate sealant or mastic flashing component. Embed elastomeric membrane in a heavy coat of adhesive, except for self-adhering membrane. Continuous metal reglets shall be installed, horizontally on footing and vertically on intersecting and connecting walls, and as specified in Section 07 60 00 FLASHING AND SHEET METAL. Metal reglets shall receive exposed edges of membrane waterproofing. Secure membrane into reglets by lead wedges and fill with cement as recommended by manufacturer of waterproofing materials. Counterflash upper edge of

membrane waterproofing and protective covering as specified in Section 07 60 00 FLASHING AND SHEET METAL.

3.6 FIELD QUALITY CONTROL

Notify the Contracting Officer one day prior to date of performing tests. Before concealment, cover elastomeric waterproofing on horizontal surfaces over finished spaces with 3 inches of ponded water for 24 hours. Do not add water after start of 24 hour period. Carefully measure water level at beginning and end of 24 hour period. If water level falls, remove water and inspect waterproofing membrane. Make repairs or replacement as directed, and repeat test. Do not proceed with work that conceals membrane waterproofing before receiving approval and acceptance of Contracting Officer.

3.7 PROTECTIVE COVERING

After installation has been inspected and approved by the Contracting Officer, apply a protective covering to the membrane waterproofing prior to backfilling. Protect vertical membrane waterproofing with a 1/2 inch minimum thickness of asphalt plank 1/8 inch minimum thickness of compatible water-resistant bitumen type protection board with edges abutting adjacent edges and exposed surfaces covered by a taping system recommended by manufacturer of protection board. Cover horizontal membrane waterproofing with similar protection board and Portland cement mortar not less than 3/4 inch thick; place uniformly and allow to set before installing subsequent construction.

-- End of Section --

THIS PAGE HAS BEEN INTENTIONALLY LEFT BLANK

SECTION 07 15 00.00 22

AIR AND VAPOR BARRIERS
09/14

PART 1 GENERAL

1.1 REFERENCES

The publications listed below form a part of this specification to the extent referenced. The publications are referred to within the text by the basic designation only.

ASTM INTERNATIONAL (ASTM)

ASTM C1060	(2011a) Standard Practice for Thermographic Inspection of Insulation Installations in Envelope Cavities of Frame Buildings
ASTM D1876	(2008; R 2015; E 2015) Standard Test Method for Peel Resistance of Adhesives (T-Peel Test)
ASTM D1970/D1970M	(2014) Self-Adhering Polymer Modified Bituminous Sheet Materials Used as Steep Roofing Underlayment for Ice Dam Protection
ASTM D2000	(2012) Standard Classification System for Rubber Products in Automotive Applications
ASTM D3767	(2003; R 2008) Standard Practice for Rubber - Measurements of Dimensions
ASTM D412	(2006a; R 2013) Standard Test Methods for Vulcanized Rubber and Thermoplastic Elastomers - Tension
ASTM D4541	(2009; E 2010) Pull-Off Strength of Coatings Using Portable Adhesion Testers
ASTM E1186	(2003; R 2009) Standard Practices for Air Leakage Site Detection in Building Envelopes and Air Barrier Systems
ASTM E154/E154M	(2008a; R 2013; E 2013) Water Vapor Retarders Used in Contact with Earth Under Concrete Slabs, on Walls, or as Ground Cover
ASTM E162	(2013) Surface Flammability of Materials Using a Radiant Heat Energy Source
ASTM E1677	(2011) Standard Specification for Air Barrier (AB) Material or System for Low-Rise Framed Building Walls

ASTM E1680	(2011) Standard Test Method for Rate of Air Leakage Through Exterior Metal Roof Panel Systems
ASTM E2178	(2013) Standard Test Method for Air Permeance of Building Materials
ASTM E2357	(2011) Standard Test Method for Determining Air Leakage of Air Barrier Assemblies
ASTM E283	(2004; R 2012) Determining the Rate of Air Leakage Through Exterior Windows, Curtain Walls, and Doors Under Specified Pressure Differences Across the Specimen
ASTM E779	(2010) Standard Test Method for Determining Air Leakage Rate by Fan Pressurization
ASTM E96/E96M	(2014) Standard Test Methods for Water Vapor Transmission of Materials

INTERNATIONAL ORGANIZATION FOR STANDARDIZATION (ISO)

ISO 6781	(1983) Thermal Insulation - Qualitative Detection of Thermal Irregularities in Building Envelopes - Infrared Method

US ARMY CORPS OF ENGINEERS (USACE)

USACE-ALTP	Air Leakage Test Protocol for Measuring Air Leakage in Buildings

1.2 SUBMITTALS

Government approval is required for submittals with a "G" designation; submittals not having a "G" designation are for Contractor Quality Control approval. The following shall be submitted in accordance with Section 01 33 00 SUBMITTAL PROCEDURES:

SD-02 Shop Drawings

Shop Drawings

Manufacturer's standard detail catalog and shop drawings depicting typical and specific detail conditions of the required installation. Details shall include, but are not limited to, interface with other envelope assemblies and materials, corners, terminations, transitions, joints and gaps to be bridged, and sealing of attachments and penetrations through the barrier membrane materials.

SD-03 Product Data

Accessory materials

Water Resistant Self-Adhering Air Barrier Membrane; G

Air Barrier; G

Submit product data to identify the materials to be used and compliance with specified requirements.

SD-04 Samples

Mock-Up

Water Resistant Self-Adhering Air Barrier Membrane

SD-05 Design Data

Design Data

Information related to the postive and negative pressure resistance and adhesion properties (e.g., pull-off and peel strength), where applicable, of the barrier material to the substrate.

SD-06 Test Reports

Test Reports; G

Whole Building Air Leakage Test Report; G

Thermography Test Report; G

Bond Adhesion Strength Test Report; G

SD-07 Certificates

Manufacturer's certification of materials compatibility; G

Inspector Qualifications; G

Whole Building Air Leakage Test Technician Qualifications; G

Thermography Technician Qualifications; G

Whole Building Air Leakage Test Procedures; G

Thermography Test Procedures; G

SD-08 Manufacturer's Instructions

Manufacturer's instructions; G

Detailed surface preparation and application instructions and precautions for all materials used, including but not limited to, membrane, fluid-applied products, cleaners, primers, adhesives, mastics, and other accessory materials.

Material safety data sheets (MSDS).

1.3 PREINSTALLATION CONFERENCE

Prior to starting application of the air and vapor barrier system, arrange and attend a preinstallation conference to ensure a clear understanding of the requirements. Give the Contracting Officer 7 days advance written

notice of the time and place of meeting. Ensure that the air and vapor barrier inspector, mechanical and electrical subcontractor, flashing and sheetmetal subcontractor, and other trades that may perform other types of work penetrating through, on, or over the barrier membrane attend this conference. The conference shall address where each sub-contractor begins and ends, the sequence of installation, and each sub-contractor's responsibility to ensure airtight joints, junctures, penetrations and transitions between materials, products, and assemblies of products specified in the different sections to be installed by the different sub-contractors.

1.4 DELIVERY, STORAGE, AND HANDLING

Deliver materials in manufacturer's original, unopened containers, with labels intact and legible. Containers of materials covered by a referenced specification number shall bear the specification number, type, and class of the contents. Deliver materials in sufficient quantity to continue work without interruption. Store and protect materials in accordance with manufacturer's instructions, and use within their indicated shelf life. When hazardous materials are involved, adhere to special precautions of the manufacturer, unless precautions conflict with local, state, and federal regulations. Promptly remove from the site materials or incomplete work adversely affected by exposure to moisture, freezing, or contaminents. Store materials on pallets and cover from top to bottom with canvas tarpaulins.

1.5 ENVIRONMENTAL CONDITIONS

Apply materials when ambient temperature is 40 degrees F or above for a period of 24 hours prior to the application and when there is no ice, frost, surface moisture, or visible dampness on the substrate surface, except as allowed by the product manufacturer's published instructions. Apply materials when air temperature is expected to remain above 40 degrees F during the cure period recommended by the manufacturer. Work may be performed within heated enclosures, provided the surface temperature of the substrate is maintained at a minimum of 40 degrees F for 24 hours prior to the application of the materials, and remains above that temperature during the cure period recommended by the manufacturer.

1.6 PERFORMANCE REQUIREMENTS

1.6.1 General Materials Performance Requirements

All materials of the barrier membrane system shall comply with the following:

a. Air Permeance of Materials - Materials shall have an air permeance less than or equal to 0.004 cfm/sf under a pressure differential of 1.57 psf when testing in accordance with ASTM E2178.

b. Moisture Vapor Permeance - Materials shall have the following water vapor permeance when tested in accordance with ASTM E96/E96M:

   1) Wall System Vapor Barrier: 1.0 perms or less

   2) Roof System Vapor Barrier: 1.0 perms or less

   3) Under-Slab (Slab on Grade) Vapor Barrier: 0.01 perms or less and as required by the finish floor material manufacturer.

1.6.2 Assembly Performance Requirements

The assembly shall accommodate movements of building materials by providing expansion and control joints and flexible connections as required with accessory air and vapor seal materials at such locations, changes in substrate and perimeter conditions. Assembly shall be capable of withstanding combined positive and negative design wind, fan and stack pressures on the envelope without damage or displacement, and shall transfer the load to the structure. Assembly shall not displace adjacent materials under full load. Assembly shall be joined in an air and water-tight flexible manner to the barrier material of adjacent assemblies, allowing for the relative movement of assemblies due to thermal and moisture variations and creep, and anticipated seismic movement. For drainage or cavity wall constructions, the air and vapor barrier assembly shall perform as a liquid drainage plane flashed to discharge condensation or water penetration to the exterior.

1.6.2.1 Connections

Connections shall prevent air leakage and vapor migration at the following locations:

a. Foundation and walls, including penetrations, ties and anchors.

b. Walls, windows, curtain walls, storefronts, louvers or doors.

c. Different wall assemblies, and fixed openings within those assemblies.

d. Wall and roof connections and penetrations.

e. Floors over unconditioned space.

f. Walls, floor and roof across construction, control and expansion joints.

g. Walls, floors and roof to utility, pipe and duct penetrations.

h. Seismic and expansion joints.

i. All other leakage pathways in the building envelope.

1.6.3 Air Permeance of Assemblies

Assemblies of materials and components including, but not limited to, sealants and tapes, shall have an average air leakage of 0.04 cfm/sf or less under a pressure differential of 1.57 psf when tested in accordance with ASTM E2357, ASTM E1680, ASTM E1677, or ASTM E283, as applicable to the assembly.

1.6.4 Whole Building Air Leakage

Whole building air leakage testing shall indicate air leakage not to exceed 0.25 cfm/sf of building envelope area at a pressure differential of 1.57 psf when tested in accordance with USACE-ALTP Air Leakage Test Protocol for Measuring Air Leakage in Buildings.

1.7 QUALITY CONTROL

The Contractor shall provide quality control personnel, procedures, testing and verification as specified. The Contractor shall facilitate inspections, tests, and other quality control services specified elsewhere in the Contract Documents and required by the Contracting Officer.

1.7.1 Coordination of Sub-Contractor(s)

The Contractor shall provide coordination between the sub-contractors involved in the construction of the air and vapor barrier system, coordinate the sequence of construction to ensure continuity of the barrier system joints, junctures, penetrations, and transitions between materials and assemblies of materials and products from substructure to walls to roof.

1.7.2 Inspection

The Contractor shall provide an experienced inspector knowledgeble of air and vapor barrier construction to oversee: the sequencing and installation of the air and vapor barrier component materials and assemblies; the proper joining and sealing of the materials and assemblies; the sealing of penetrations of the barrier materials and assemblies; and to instruct the subcontractors on the above. The inspector shall also verify the items under "Field Quality Control" paragraph of this specification section.

1.7.2.1 Inspector Qualifications

The inspector shall have a minimum of 3 years experience in the installation of air and vapor barrier materials and assemblies in similar construction including the experience in joining and sealing various components, and sealing of penetrations of the barrier. The inspector shall have experience coordinating and instructing installers involved in the installation, joining, and sealing of the barrier system materials and components.

1.7.2.2 Documentation and Reporting

Document the installation process on daily reports to the Contracting Officer. Include information on the installer, substrates, substrate preparation, products used, ambient and substrate temperature, the location of the barrier installation, problems encountered and their resolution, the results of the quality control procedures, and any testing results.

1.7.3 Mock-Up

The Contractor shall build a construction mock-up to include back-up wall, typical penetrations, joint conditions, junctures, and transition between materials, products, and assemblies of products specified in the different sections to be installed. Mock-up shall be of a minimum of 8 feet by 8 feet and of additional size required to include the noted conditions of the installation. This mock-up may be combined with the required wall panel mock-up; see Section 04 20 00. Work will not proceed until the mock-up construction is satisfactory to the Contracting Officer.

1.7.4 Testing

The Contractor shall perform the testing specified. Qualified personnel meeting the specified requirements shall conduct the test and report the

test results.

1.7.4.1 Whole Building Air Leakage Test Technician Qualifications

The testing technician shall have a minimum of 3 years experience in whole building leakage testing using the specified testing procedure. Technician shall also have experience in identifying deficiencies in the building construction upon failure of the test to meet the specified requirements.

1.7.4.2 Thermography Technician Qualifications

The testing technician shall have received formal training in the application of infrared thermography to building envelope inspection, moisture intrusion, and energy loss in buildings. Training shall be documented by certificate from a recognized thermographer training organization such as the Infrared Training Center, Building Science Institute, Infraspection Institute, or other entity as approved by and at the sole discretion of the Contracting Officer. The thermographer shall have a minimum of 5 years experience in infrared thermography applied to building science.

1.7.4.3 Test Procedures

The Contractor shall submit detailed test procedures indicating the test apparatus, the test methods and procedures, and the analysis methods to be employed for the Whole Building Air Leakage Test and the Thermography Test. The procedure shall be submitted not later than 90 days after the Notice to Proceed.

1.7.4.4 Test Reports

The inspection and testing agency shall submit a certifed written report, in duplicate, of each inspection, test, or similar service to the Contracting Officer not later than 10 days after each inspection or test. The report shall include the following information as a minimum:

a. Date of issue

b. Project title and number

c. Name, address, and phone number of the testing agency

d. Names of individuals making the inspection or test

e. Dates and locations of tests, inspections, or samples

f. Designation of the Work and test method

g. Identification of product(s) and applicable specification section

h. Complete, detailed inspection or test data

i. Test results and a professional, conclusive interpretation of the test results

j. Comments and profession opinion on whether the inspected or tested Work complies with the contract requirements and recommendations for remedy as applicable

k. Recommendations on re-inspection or retesting.

l. Name and signature of inspector

The Whole Building Air Leakage Test Reports, Bond Adhesion Strength Test Reports and Thermography Test Reports shall be submitted in duplicate to the Contracting Officer not later than 10 days after each inspection or test. The report shall adhere to and include the requirements specified for Test Reports and additionally as otherwise stated or referenced in the test standards or procedures.

1.8 WARRANTY

1.8.1 Material Warranty

Provide barrier membrane manufacturer's material warranty for a minimum of three years from date of beneficial occupancy. Warranty shall provide for the replacement of any materials that fail to cure or that deteriorate to the point of no longer meeting the specified requirements.

1.8.2 Contractor Warranty

Provide a minimum two year contractor materials and workmanship warranty from the date of beneficial occupancy. Warranty shall include all components of the air and vapor barrier system assembly. Failure of airtight seal, failure of watertight seal, loss of adhesion, loss of cohesion, failure to cure, or other failures of materials or installation workmanship such that the barrier system no longer meets the specified requirements shall be corrected by the contractor at no additional cost to the Government, including all costs of removals and repair work necessary to return the construction to the original construction requirements.

PART 2 PRODUCTS

2.1 MATERIALS

Provide the type of air and vapor barrier material and related primers, adhesives, mastics, tapes, sealants, and other accessories as specified and necessary for a complete air and vapor barrier system assembly. Ensure compatibility of the materials within a specific barrier membrane type, with each other, and with the materials to which they will be applied. Materials shall conform to the specified Performance Requirements and materials properties specified when tested in accordance with the referenced standards.

CRoof system air and vapor barrier materials are specified in 13 34 19 METAL BUILDING SYSTEMS. Wall and under slab air vapor barrier materials are specified in their related specification sections and shall also meet the air and vapor permeance performance requirements specified in this specification section.

Submit to the Contracting Officer the following items as detailed in the Submittals Article:

a. Shop drawings

b. Design data

c. Manufacturer's certification of materials compatibility

d. Manufacturer's instructions

e. Material safety data sheets (MSDS)

2.2 Water Resistant Self-Adhering Air Barrier Membrane

This product is pre-cut and used for transitions at roof and exterior wall, window sill pan flashing, window jambs, headers, door openings, inside and outside corners, and other transitions.Self-adhering membrane with a engineered film specifically designed to be water resistant and vapor permeable. composed of flexible facing material coated completely and uniformly on one side with adhesive material, formed into uniform flexible sheets, and with disposable release liner that is removed prior to application or membrane that adheres upon application of heat to the membrane surface. Provide sample of Water Resistant Self-Adhering Air Barrier Membrane to Contracting Officer for approval. Construct mock-up in accordance with 1.7.3 Mock Ups. Materials shall meet the requirements indicated:

a. Thickness, ASTM D3767, 40 mils minimum;

b. Tensile Strength, ASTM D412, D40lbF and 29lbF per ASTM D828

c. Ultimate Elongation, ASTM D412, Die C: 200 percent minimum;

d. Puncture Resistance, ASTM E154/E154M: 10lb. minimum;

e. Lap Adhesion at Minimum Application Temperature, ASTM D1876 Modified: 4.0 lbs/in. width.

2.3 Air Barrier - Exterior Wall

EXTERIOR WALL: Fluid applied air barrier, minimum 25 mil dry thickness, vapor permeable, low VOC, single component product with excellent elasticity and flexibility. Applicable in one coat with extremely low shrinkage during curing.

a. Air permeance shall be tested and reported as being 0.0002 cubic feet per minute per square foot under a pressure differential of 1.57 pounds per square foot (0.0002 cfm.ft2 @ 1.57 psf), at 25 mils (dry, when tested in accordance with ASTM E2178 (unmodified).

b. Water vapor permeance for this material has been tested and reported as being 1384 nanograms of water vapor passing through each square meter of area per second for each pascal of vapor pressure differential (1384 ng/Pas m2) at 25 mils (dry) when tested in accordance with ASTM E96/E96M (water method-unmodified).

2.3.1 Air Barrier - Roof

See Roof Insualtion Ststem in Section 13 34 19 METAL BUILDING SYSTEMS

2.3.2 Air Barrier - Underslab

See Vapor Retarder in Section 03 30 00 CAST-IN-PLACE CONCRETE

2.4 ACCESSORY MATERIALS

2.4.1 Primers, Adhesives and Mastics

As required and recommended by the air and vapor barrier membrane manufacturer.

2.4.2 Sealants and Tapes

As required and recommended by the air and vapor barrier membrane manufacturer and capable of accommodating inherent movement while maintaining required performance, attachment, and seal to the connected components.

2.4.3 Counterflashing Stripping

Modified bituminous, minimum 30 mil thick, self-adhering sheet, ASTM D1970/D1970M, of rubberized asphalt laminate to a 10 mil thick, crosslaminated polyethylene film with release liner backing. Provide for counterflashing seal of metal flashings.

2.4.4 Elastomeric Flashing Sheet

Neoprene or EPDM membrane, ASTM D2000, 2BC415 to 3BC620, minimum 40 mil, cured sheet neoprene with manufacturer's recommended contact adhesives and lap sealant with stainless-steel termination bars and fasteners.

2.4.5 Foam Sealant

One or two-component, foamed-in-place, polyurethane foam sealant; flame spread index of 25 or less in accordance with ASTM E162, with primer and noncorrosive substrate cleaner recommended by foam sealant manufacturer.

PART 3 EXECUTION

3.1 VERIFICATION OF CONDITIONS

Before starting the work, verify that substrate surfaces are in satisfactory condition. Notify the Contracting Officer of defects or conditions that will prevent a satisfactory application. Do not start application until defects and conditions have been corrected.

3.2 EXAMINATION

Ensure that the following conditions are met:

a. Surfaces are sound, dry, even, and free of oil, grease, dirt, excess mortar or other contaminants that may affect application of air and vapor barrier materials.

b. Concrete surfaces are cured and dry, smooth without large voids, spalled areas or sharp protrusions.

c. Masonry joints are flush, and all excess mortar sitting on masonry ties has been removed.

d. Verify substrate is visibly dry and free of moisture.

e. Verify sealants used in sheathing are compatible with membrane proposed

for use. Perform field peel-adhesion test on materials to which sealants are adhered.

f. Notify the Contracting Officer in writing of anticipated problems or issues with the substrates prior to proceeding.

3.3 PREPARATION

Coordinate work with that of other trades to ensure that components to be incorporated into the barrier system are available when needed. Inspect and approve surfaces immediately before application of barrier system materials. Clean, prepare, and treat substrate according to manufacturer's written instructions. Provide clean, dust-free, and dry substrate, unless otherwise recommended by the barrier manufacturer's appliction instructions. Remove laitance, loose aggregate, sharp projections, grease, oil, dirt, curing compounds, and other contaminants which could adversely affect the complete bonding of the barrier membrane materials to substrate surface.

3.3.1 Penetrations and Projections

Seal penetrations in accordance with barrier system manufacturer's requirements before application of air and vapor barrier system.

3.3.2 Cracks and Joints

Prepare visible cracks and joints in substrate to receive barrier membrane in accordance with the membrane manufacturer's requirements. Joints shall be prepared and sealed with flexible materials to accommodate joint movement.

3.3.3 Priming

Prime surfaces to receive barrier membrane materials as required by the material manufacturer's printed instructions.

3.3.4 Protection from Spray Applied Materials

Mask and cover adjacent areas to protect from over spray. Ensure any required foam stop or back up material are in place to prevent over spray and achieve complete seal. Seal off existing ventilation equipment. Install temporary ducting and fans as necessary to remove required operational exhaust fumes. Provide for make-up air. Erect barriers, isolate area and post warning signs to advise non-protected personnel to avoid the spray area.

3.3.5 Materials Integrity

Protect materials during transport and application. Do not dilute primers and other materials, unless specifically recommended by materials manufacturer. Keep containers closed except when removing contents. Do not mix remains of unlike materials. Thoroughly remove residual materials before using application equipment for mixing and transporting materials. Do not permit equipment on the project site that has residue of materials used on previous projects. Use cleaners only for cleaning, not for thinning primers or membrane materials.

3.4 APPLICATION

Follow manufacturer's printed installation instructions and additional requirements specified.

3.4.1 Transition Materials

Install transition materials to provide continuity throughout the building envelope. Install materials in accordance with manufacturer's recommendations and the following:

a. Apply primer for transition strips at rate recommended by manufacturer. Allow primer to dry completely before transition strip application. Apply as many coats as necessary for proper adhesion.

b. Position subsequent sheets of transition strips applied above so that membrane overlaps the membrane sheet below by a minimum of 2 inches, unless greater overlap is recommended by manufacturer. Roll into place with roller.

c. Overlap horizontally adjacent pieces of transition strips a minimum of 2 inches, unless greater overlap is recommended by manufacturer. Roll seams with roller.

d. Seal around all penetrations with a transition material or other procedure in accordance with manufacturer's recommendations.

e. Seal the barrier membrane in exterior wall assembly continuously to the barrier conditions of the roof, to concrete below-grade structures, to windows, curtain wall, storefront, louvers, exterior doors, penetrations, and other intersection conditions using transition membranes and sealants and in accordance with the manufacturer's recommendations.

f. At changes in substrate plane, provide transition material recommended by manufacturer to make a smooth transition from one plane to another.

g. Provide mechanically fastened non-corrosive metal sheet to span gaps in substrate plane and to make a smooth transition from one plane to the other. Barrier membrane shall be continuously supported by substrate.

h. At through-wall flashings, provide an additional 6 inch wide strip of manufacturer's recommended membrane counterflashing to seal top of through-wall flashing to membrane. Seal exposed top edge of strip with bead of mastic as recommended by manufacturer.

i. At deflection and control joints, provide backup for the barrier membrane to accommodate anticipated movement.

j. At expansion and seismic joints provide transition to the joint assemblies.

k. Do not allow materials to come in contact with chemically incompatible materials.

l. Do not expose transition membrane to sunlight longer than as recommended by the manufacturer.

m. Inspect installation prior to enclosing transition areas and repair

damaged areas with like materials as recommended by manufacturer.

3.4.2 Water Resistant Self-Adhering Air Barrier Membrane

Apply composite, self-adhering membrane on surfaces primed at a uniform coverage rate in accordance with membrane manufacturer's printed instructions. Remove release sheet and apply with tacky surface in contact with dried primer. Avoid wrinkles and buckles in applying membrane and joint reinforcement. Lap sheets at edges and ends a minimum of 2-1/2 inches over the preceding sheet. All side laps shall be minimum 2-1/2 inches and end laps shall be 5 inches. Laps shall be made shingle fashion to shed water in the direction fo flow. Laps shall be self adhesive or mastic in accordance with the manufacturer's recommendation. Roll or firmly press to adhere membrane to substrate and firmly seal laps. Cover corners and joints with two layers of reinforcement by first applying a 12 inch width of membrane centered along the axis. Flash projections with a second ply of membrane extending for a distance of not less than 6 inches from the projection. Finish exposed, terminated edges of membrane on horizontal surfaces with a trowelled bead of mastic. Finish vertical joints similary when required by the membrane manufacturer's printed instructions or recommendations.

3.4.3 APPLICATION OF AIR AND WEATHER BARRIER

Gypsum sheathing should be clean and free from any materials that could negatively affect adhesion. When installing over sheathing, it is important that all sheathing seams be pretreated using the appropriate joint treatment method. All flashing and detailing should be completed before installation of weather barrier. When applying over exterior gypsum, all cut edges along outside corners and rough openings should first be primed with a recommended primer. Pretreat all inside and outside corners by applying a 25 mil thick coat of weather barrier applied 2” onto each adjoining surface. It is recommended that a fillet bead of flashing product be applied to inside corners to help ensure continuity.

Weather barrier product may be brushed, rolled or spray applied. However, application using a pressure roller is the preferred method. A roller cover with a 1/4”- 3/8” nap is recommended. When applying by spray, the surface should be back rolled to insure a pinhole free surface. The weather barrier should also be applied in a single coat at 25 mils thick (yielding approximately 65 sf/gal on exterior gypsum). The thickness should be controlled by applying the appropriate volume over a marked area and by spot checking with a wet mil gauge. Upon completion, inspect the membrane to ensure that it is continuous and free of any voids or pinholes. Exterior insulation may be installed once the membrane has cured sufficiently to resist damage during installation. Skin time is 1-2 hrs, and 25 mil fully cures in 24 hrs at 70°F (20°C), 50% RH.

3.5 PROTECTION

Protection and repair is the Contactor's responsibility regardless of the assignment of responsibility for inspection, testing or sample taking and similar services. Protect air and vapor barrier assemblies from damage during application and remainder of construction period. Coordinate with installation of materials which cover the barrier, to ensure exposure period does not exceed that recommended by the barrier manufacturer. Clean spillage and soiling from adjacent construction using cleaning agents and procedures recommended by manufacturer of affected construction and

acceptable to the primary barrier material manufacturer. Repair damaged construction, or construction impacted by destructive or other testing and sampling, in a manner to meet specified requirements.

3.6 CORRECTION OF DEFICIENCIES

Where any form of deficiency is found, additional measures shall be taken as deemed necessary by the Contracting Officer to determine the extent of the deficiency. Corrective action shall be performed as recommended by the barrier membrane material manufacturer in a manner that complies with the full performance requirements specified and as approved by the Contracting Officer.

3.7 FIELD QUALITY CONTROL

3.7.1 Inspection and Construction Monitoring

Inspect the work to ensure compliance with specified requirements adn provide daily inspection report during the air and vapor barrier installation activity. Verfy the following:

a. Materials comply with the specified requirements.

b. Materials are not installed in adverse weather conditions nor temperatures beyond the application range specified or recommended by the barrier membrane manfuacturer.

c. All materials are properly stored, handled and protected from damage.

d. Application equipment is in working order. Metering devices are accurate.

e. Substrates are in acceptable condition, primed as appropriate, and in compliance with specification prior to application of subsequent materials.

f. Installer adheres to specified and detailed application parameters.

g. Ensure proper transitions for change in direction and structural support at gaps.

h. Ensure continuity of the air and vapor barrier system throughout the building enclosure and that all gaps are covered, the covering is structurally sound, and all penetrations are sealed.

i. Ensure structural support of the barrier system to withstand design air pressures.

j. Ensure masonry and concrete substrate surfaces are smooth, clean, and free of voids, protrusions and mortar droppings, with mortar joints struck flush.

k. Ensure laps in sheet materials are at least a 2-inch minimum, shingled in the correct direction to shed water.

l. Ensure that a roller has been used to enhance adhesion of adhered sheet membrane materials.

m. Ensure proper connection between assemblies (membrane and sealants) for

cleaning, preparation and priming of surfaces, structural support, integrity and continuity of seal.

n. Measure application thickness of liquid applied materials to manufacturer's requirements for the specific substrate.

o. Temporary protection measures are in place at the end of each work shift.

3.8 PERFORMANCE VERIFICATION TESTING

3.8.1 Whole Building Air Leakage Test

A whole building air leakage test shall follow the guidance in the USACE-ALTP Air Leakage Test Protocol for Measuring Air Leakage in Buildings. This protocol is available on the Whole Building Design Guide website- http://www.wbdg.org/pdfs/usace airleakagetestprotocol.pdf The fan pressurization test to determine final compliance with the airtightness requirement shall be conducted when all components of the air barrier system have been installed and inspected, and have passed any intermediate testing procedures as detailed in the construction drawings and specifications. The test may be conducted before finishes that are not part of the air barrier system have been installed. For example, if suspended ceiling tile, interior gypsum board, or cladding systems are not part of the air barrier system, the test may be conducted before they are installed.

3.8.1.1 Test Requirements

The whole building air leakage test must be performed in accordance with ASTM E779 with the following additions and exceptions:

The test consists of measuring the flow rates required to establish a minimum of 12 positive and 12 negative building pressures. The lowest test pressure shall be 0.50 psf (25 Pa); the highest test pressure shall be 1.57 psf (75 Pa); and there must be at least 0.50 psf (25 Pa) difference between the lowest and highest test pressures.

The test pressure must be measured in a representative location such that pressures in the extremities of the enclosure can be shown to not exceed 10 percent of the measured test pressure. At least 12 bias pressure readings must be taken across the envelope and averaged over at least 20 seconds each before and after the flow rate measurements. None of the bias pressure readings must exceed 30 percent of the minimum test pressure when testing in both directions.

Where it can be shown that it is impossible to test in both directions, then the building may be tested in the positive direction only, provided the bias pressure does not exceed 10 percent of the minimum test pressure.

The mean value of the air leakage flow rate calculated from measured data at 1.57 psf or 0.3 in wg (75 Pa) must not exceed 0.25 cfm/ft2 of envelope area with an upper confidence limit as defined by ASTM E779 not exceeding 0.27 cfm/ft2 based upon a confidence interval of ±0.02 cfm/ft2; should the confidence interval exceed ±0.02 cfm/ft2 the upper confidence limit may not exceed 0.25 cfm/ft2 (75 Pa). Measurements must be referenced at standard conditions of 14.70 psi (101.33 KPa) and 68F (20C). The envelope area is to be supplied and/or confirmed by the Designer of Record (DOR).

The test shall be conducted with ventilation fans and exhaust fans turned off and the outdoor air inlets and exhaust outlets sealed (by dampers or masking). The contractor must provide a responsible HVAC technician with the authority to place the HVAC system in the correct mode for the pressure test. The test technician must have unhindered access to mechanical rooms, air handlers, exhaust fans, and outdoor air and exhaust dampers.

The contractor must ensure that all windows in the enclosure are kept closed. Entry and exit through doors in the test enclosure must be prohibited during the test. Data collected while the pressures and flows are affected by a door opening and closing shall be discarded.

The testing agency is required to perform a diagnostic evaluation in accordance with ASTM E1186, whether the building achieves the air tightness requirement or not. The diagnostic evaluation will assist the contractor and responsible parties in identifying and eliminating air leakage so the building meets the requirement upon retesting. The testing results will also be expressed in terms of the Equivalent Leakage Area (EqLA) at 1.57 psf (75 Pa). The EqLA is a the equivalent area of a flat plate that leaks the same amount as the building envelope at 1.57 psf (75 Pa).

3.8.2 Thermography Test

The building envelope shall be tested using Infrared Thermography technology. The thermography testing shall be completed in accordance with the requirements of ASTM C1060, ASTM E1186, and ISO 6781. The Contracting Officer shall witness the testing. Testing shall occur just before the building airtightness test. Testing shall also occur during the airtightness test so that areas of building air leaks are detected. If the building air tightess test is failed, Thermographic testing shall be repeated just before and during subsequent airtightness tests until the airtightness test is successful. The contractor shall provide a report. The report shall include thermographs in color and a color temperature scale to define the temperature indicated by the various colors. The report shall identify the high temperature reading, the outdoor air temperature, the building indoor air temperature, and the wind speed and direction. The report shall note any areas of compromise in the building envelope, and shall note all actions required and taken to correct those areas. Final thermography test report shall demonstrate the problem areas have been corrected. The complete test and analysis will be submitted to the Government for review and approval.

3.8.3 Bond Adhesion Strength Test

Test for bond adhesion pull-off strength of fluid-applied or sheet-applied barrier membrane in accordance with ASTM D4541. Minimum acceptable bond adhesion pull-off strength shall be as stated in the barrier membrane manufacturer's product data for the substrate to which applied. In the absence of manufacturer's data the minimum bond strength shall be the minimum specified. Test bond strength after the adhesive bond set time recommended by the barrier membrane manufacturer. Bond strength shall be tested on each day's application and as follows: a minimum of one bond adhesion test shall be performed on each wall section length of less than 100 feet; two bond adhesion tests for wall section lengths of 100 to 200 feet in length; For walls sections longer than 200 feet, conduct a minimum of one bond adhesion test at 50 feet to 75 feet intervals. Location of

testing shall be as selected by the Contracting Officer. Bond failure strength shall be compared to the manufacturer's indicated adhesion strength for the substrate. Failed test shall result in a second test of the application in another selected area of the same wall section. Any failures shall be investigated by the Contractor to determine the reason for failure and corrective action to remedy failures and prevent further failures shall be taken. All test areas shall be repaired by the Contractor.

3.9 INVESTIGATION OF CAUSE OF FAILED TESTS

The Contractor shall investigate the cause of failed air leakage tests. The air and vapor barrier inspector shall assist with the investigation. Procedures outlined in ASTM E1186 (infrared scanning, smoke tracer, tracer gas, etc.) shall be implemented to assist in determining the air leakage locations. Cause shall be determined and included in the report to the Contracting Officer. Repairs shall be made and testing repeated until the required airtightness is achieved.

-- End of Section --

THIS PAGE HAS BEEN INTENTIONALLY LEFT BLANK

SECTION 07 21 13

BOARD AND BLOCK INSULATION
05/11

PART 1 GENERAL

1.1 REFERENCES

The publications listed below form a part of this specification to the extent referenced. The publications are referred to within the text by the basic designation only.

ASTM INTERNATIONAL (ASTM)

ASTM C203	(2005; R 2012) Breaking Load and Flexural Properties of Block-Type Thermal Insulation
ASTM C272/C272M	(2012) Standard Test Method for Water Absorption of Core Materials for Sandwich Constructions
ASTM C553	(2013) Standard Specification for Mineral Fiber Blanket Thermal Insulation for Commercial and Industrial Applications
ASTM C578	(2015b) Standard Specification for Rigid, Cellular Polystyrene Thermal Insulation
ASTM C930	(2012) Potential Health and Safety Concerns Associated with Thermal Insulation Materials and Accessories
ASTM D1621	(2010) Compressive Properties of Rigid Cellular Plastics
ASTM D3833/D3833M	(1996; R 2011) Water Vapor Transmission of Pressure-Sensitive Tapes
ASTM E154/E154M	(2008a; R 2013; E 2013) Water Vapor Retarders Used in Contact with Earth Under Concrete Slabs, on Walls, or as Ground Cover
ASTM E84	(2015b) Standard Test Method for Surface Burning Characteristics of Building Materials
ASTM E96/E96M	(2014) Standard Test Methods for Water Vapor Transmission of Materials

U.S. NATIONAL ARCHIVES AND RECORDS ADMINISTRATION (NARA)

29 CFR 1910.134	Respiratory Protection

1.2 SUBMITTALS

Government approval is required for submittals with a "G" designation;

submittals not having a "G" designation are for Contractor Quality Control approval. The following shall be submitted in accordance with Section 01 33 00 SUBMITTAL PROCEDURES:

SD-03 Product Data

Block or board insulation; G

Vapor retarder

Pressure sensitive tape

Accessories

SD-08 Manufacturer's Instructions

Block or Board Insulation

Adhesive

1.3 DELIVERY, STORAGE, AND HANDLING

1.3.1 Delivery

Deliver materials to the site in original sealed wrapping bearing manufacturer's name and brand designation, specification number, type, grade, R-value, and class. Store and handle to protect from damage. Do not allow insulation materials to become wet, soiled, crushed, or covered with ice or snow. Comply with manufacturer's recommendations for handling, storing, and protecting of materials before and during installation.

1.3.2 Storage

Inspect materials delivered to the site for damage; unload and store out of weather in manufacturer's original packaging. Store only in dry locations, not subject to open flames or sparks, and easily accessible for inspection and handling.

1.4 SAFETY PRECAUTIONS

1.4.1 Respirators

Provide installers with dust/mist respirators, training in their use, and protective clothing, all approved by National Institute for Occupational Safety and Health (NIOSH)/Mine Safety and Health Administration (MSHA) in accordance with 29 CFR 1910.134.

1.4.2 Other Safety Considerations

Consider safety concerns and measures as outlined in ASTM C930.

PART 2 PRODUCTS

2.1 BLOCK OR BOARD INSULATION

Provide the following type insulation board at the outside edge of the floor slab along the exposed perimeter of the pre-engineered building. Provide only thermal insulating materials recommended by manufacturer for type of application indicated. Provide board or block thermal insulation

conforming to the following standards and the physical properties listed below:

a. Extruded Preformed Cellular Polystyrene: ASTM C578

2.1.1 Thermal Resistance and Thickness:

As indicated on drawings.

2.1.2 Fire Protection Requirement

a. Flame spread index of 75 or less when tested in accordance with ASTM E84.

b. Smoke developed index of 150 or less when tested in accordance with ASTM E84.

2.1.3 Other Material Properties

Provide thermal insulating materials with the following properties:

a. Rigid cellular plastics: Compressive Resistance at Yield: Not less than 10 pounds per square inch (psi) when measured according to ASTM D1621.

b. Flexural strength: Not less than 25 psi when measured according to ASTM C203.

c. Water Vapor Permeance: Not more than 1.1 Perms or less when measured according to ASTM E96/E96M, desiccant method, in the thickness required to provide the specified thermal resistance, including facings, if any.

d. Water Absorption: Not more than 2 percent by total immersion, by volume, when measured according to ASTM C272/C272M.

e. Water Adsorption: Not more than 1 percent by volume when measured in accordance with paragraph 14 of ASTM C553.

2.1.4 Premolded Concrete Masonry Insert

ASTM C578. Install inserts in concrete masonry units at the masonry unit manufacturing plant. Provide insert with thickness not less than 1 1/4 inches.

2.1.5 Recycled Materials

Provide thermal insulation containing recycled materials to the extent practicable, provided that the material meets all other requirements of this section. The minimum required recycled material contents (by weight, not volume) are:

Polyisocyanurate/Polyurethane:	9 percent
Phenolic Rigid Foam:	5 percent
Perlite Board:	23 percent

2.1.6 Prohibited Materials

Do not provide materials containing more than one percent of asbestos.

2.2 VAPOR RETARDER AND DAMPPROOFING

2.2.1 Vapor Retarder under Floor Slab

a. Water vapor permeance: 0.2 Perm or less when tested in accordance with ASTM E96/E96M.

b. Puncture resistance: Maximum load no less than 40 pounds when tested according to ASTM E154/E154M.

2.3 PRESSURE SENSITIVE TAPE

As recommended by manufacturer of vapor retarder and having a water vapor permeance rating of one perm or less when tested in accordance with ASTM D3833/D3833M.

2.4 ACCESSORIES

2.4.1 Adhesive

As recommended by insulation manufacturer.

2.4.2 Mechanical Fasteners

Corrosion resistant fasteners as recommended by the insulation manufacturer.

PART 3 EXECUTION

3.1 EXISTING CONDITIONS

Before installing insulation, ensure that all areas that will be in contact with the insulation are dry and free of projections which could cause voids, compressed insulation, or punctured vapor retarders. If moisture or other conditions are found that do not allow the proper installation of the insulation, do not proceed but notify the Contracting Officer of such conditions.

3.2 INSTALLATION

3.2.1 Insulation Board

Install and handle insulation in accordance with the manufacturer's installation instructions. Keep material dry and free of extraneous materials. Observe safe work practices.

3.2.2 Electrical Wiring

Do not install insulation in a manner that would sandwich electrical wiring between two layers of insulation.

3.2.3 Continuity of Insulation

Butt tightly against adjoining boards, studs, rafters, joists, sill plates, headers and obstructions. Provide continuity and integrity of insulation at corners, wall to ceiling joint, roof, and floor. Avoid creating any

thermal bridges or voids.

3.3 PERIMETER SLAB INSULATION at PRE-ENGINEERED BUILDING(PEB)

Install perimeter thermal insulation where heated spaces are adjacent to exterior walls or slab edges in slab-on-grade at the pre-engineered building as shown in the wall sections of the architectural drawings.

3.3.1 Manufacturer's Instructions

Install, attach, tape edges, provide vapor retarder and other requirements such as protection against vermin, insects, damage during construction as recommended in manufacturer's instructions.

3.3.2 Insulation on Vertical Surfaces

Install thermal insulation as indicated in PEB wall sections of architectural drawings. Fasten insulation with adhesive or mechanical fasteners.

3.3.3 Insulation Under Slab

Not applicable.

3.3.4 Protection of Insulation

Protect insulation on vertical surfaces from damage during construction and back filling by application of protection board or coating. Provide protection extending at least 8 inches below grade.

3.4 VAPOR RETARDER

Apply a continuous vapor retarder as indicated. Overlap all joints at least 12 inches and seal with pressure sensitive tape. Seal at sill, header, windows, doors and utility penetrations. Repair punctures or tears with pressure sensitive tape.

3.5 ACCESS PANELS AND DOORS

Unless product is factory insulated affix insulation board to all access panels greater than one square foot and all access doors in insulated floors and ceilings. Minimum thickness of insulation board is 3/4 inch at access panels and doors; fit and trim insulation board neatly as required for full operation of panel or door.

-- End of Section --

THIS PAGE HAS BEEN INTENTIONALLY LEFT BLANK

SECTION 07 21 16

MINERAL FIBER BLANKET INSULATION
11/11

PART 1 GENERAL

1.1 REFERENCES

The publications listed below form a part of this specification to the extent referenced. The publications are referred to within the text by the basic designation only.

ASTM INTERNATIONAL (ASTM)

ASTM C665	(2012) Mineral-Fiber Blanket Thermal Insulation for Light Frame Construction and Manufactured Housing
ASTM C930	(2012) Potential Health and Safety Concerns Associated with Thermal Insulation Materials and Accessories
ASTM D3575	(2014) Flexible Cellular Materials Made From Olefin Polymers
ASTM D3833/D3833M	(1996; R 2011) Water Vapor Transmission of Pressure-Sensitive Tapes
ASTM E136	(2012) Behavior of Materials in a Vertical Tube Furnace at 750 Degrees C
ASTM E84	(2015b) Standard Test Method for Surface Burning Characteristics of Building Materials

NATIONAL FIRE PROTECTION ASSOCIATION (NFPA)

NFPA 211	(2016) Standard for Chimneys, Fireplaces, Vents, and Solid Fuel-Burning Appliances
NFPA 54	(2015) National Fuel Gas Code
NFPA 70	(2014; AMD 1 2013; Errata 1 2013; AMD 2 2013; Errata 2 2013; AMD 3 2014; Errata 3-4 2014; AMD 4-6 2014) National Electrical Code

U.S. NATIONAL ARCHIVES AND RECORDS ADMINISTRATION (NARA)

29 CFR 1910.134	Respiratory Protection

1.2 SUBMITTALS

Government approval is required for submittals with a "G" designation; submittals not having a "G" designation are for Contractor Quality Control approval. The following shall be submitted in accordance with Section 01 33 00 SUBMITTAL PROCEDURES:

SD-03 Product Data

Blanket insulation

Sill sealer insulation

Pressure sensitive tape

Accessories

SD-08 Manufacturer's Instructions

Insulation

1.3 DELIVERY, STORAGE, AND HANDLING

1.3.1 Delivery

Deliver materials to site in original sealed wrapping bearing manufacturer's name and brand designation, specification number, type, grade, R-value, and class. Store and handle to protect from damage. Do not allow insulation materials to become wet, soiled, crushed, or covered with ice or snow. Comply with manufacturer's recommendations for handling, storing, and protecting of materials before and during installation.

1.3.2 Storage

Inspect materials delivered to the site for damage; unload and store out of weather in manufacturer's original packaging. Store only in dry locations, not subject to open flames or sparks, and easily accessible for inspection and handling.

1.4 SAFETY PRECAUTIONS

1.4.1 Respirators

Provide installers with dust/mist respirators, training in their use, and protective clothing, all approved by National Institute for Occupational Safety and Health (NIOSH)/Mine Safety and Health Administration (MSHA) in accordance with 29 CFR 1910.134.

1.4.2 Smoking

Do not smoke during installation of blanket thermal insulation.

1.4.3 Other Safety Concerns

Consider other safety concerns and measures as outlined in ASTM C930.

PART 2 PRODUCTS

2.1 BLANKET INSULATION

ASTM C665, Type I, blankets without membrane coverings; Class A, except a flame spread rating of 25 or less and a smoke developed rating of 150 or less when tested in accordance with ASTM E84.

2.1.1 Thermal Resistance Value (R-VALUE)

As indicated

2.1.2 Recycled Materials

Provide Thermal Insulation containing recycled materials to the extent practicable, provided the material meets all other requirements of this section. The minimum required recycled materials content by weight are:

Rock Wool: 75 percent slag
Fiberglass: 20 to 25 percent glass cullet

2.1.3 Prohibited Materials

Do not provide asbestos-containing materials.

2.2 SILL SEALER INSULATION

Provide polyethylene foam sill sealer 3.5 inches in width with the following characteristics:.

Physical Properties	Test Method	Measurement
Nominal Thickness	ASTM D3575	3/16 inch
Compressive Strength	ASTM D3575	1.2 psi
- Vertical Direction	Suffix D	
Tensile Strength	ASTM D3575	32 psi
	Suffix T	

2.3 BLOCKING

Wood, metal, unfaced mineral fiber blankets in accordance with ASTM C665, Type I, or other approved materials. Use only non-combustible materials meeting the requirements of ASTM E136 for blocking around chimneys and heat producing devices.

2.4 PRESSURE SENSITIVE TAPE

As recommended by the vapor retarder manufacturer and having a water vapor permeance rating of one perm or less when tested in accordance with ASTM D3833/D3833M.

2.5 ACCESSORIES

2.5.1 Adhesive

As recommended by the insulation manufacturer.

2.5.2 Mechanical Fasteners

Corrosion resistant fasteners as recommended by the insulation manufacturer.

2.5.3 Wire Mesh

Corrosion resistant and as recommended by the insulation manufacturer.

PART 3 EXECUTION

3.1 EXISTING CONDITIONS

Before installing insulation, ensure that areas that will be in contact with the insulation are dry and free of projections which could cause voids, compressed insulation, or punctured vapor retarders. If moisture or other conditions are found that do not allow the workmanlike installation of the insulation, do not proceed but notify Contracting Officer of such conditions.

3.2 PREPARATION

3.2.1 Blocking Access Doors

Prior to installation of insulation, install permanent blocking to prevent insulation from slipping over, clogging, or restricting air flow through soffit vents at eaves. Install permanent blocking to maintain accessibility to equipment or controls that require maintenance or adjustment.

3.2.2 Blocking Around Heat Producing Devices

Install non-combustible blocking around heat producing devices to provide the following clearances:

a. Recessed lighting fixtures, including wiring compartments, ballasts, and other heat producing devices, unless these are certified by the manufacturer for installation surrounded by insulation: 3 inches from outside face of fixtures and devices or as required by NFPA 70 and, if insulation is to be placed above fixture or device, 24 inches above fixture.

b. Masonry chimneys or masonry enclosing a flue: 2 inches from outside face of masonry. Masonry chimneys for medium and high heat operating appliances: Minimum clearances required by NFPA 211.

c. Vents and vent connectors used for venting the products of combustion, flues, and chimneys other than masonry chimneys: Minimum clearances as required by NFPA 211.

d. Gas Fired Appliances: Clearances as required in NFPA 54.

Blocking around flues and chimneys is not required when insulation blanket, including any attached vapor retarder, passed ASTM E136, in addition to meeting all other requirements stipulated in Part 2. Blocking is also not required if the chimneys are certified by the manufacturer for use in contact with insulating materials.

3.3 INSTALLATION

3.3.1 Insulation

Install and handle insulation in accordance with manufacturer's instructions. Keep material dry and free of extraneous materials. Ensure

personal protective clothing and respiratory equipment is used as required. Observe safe work practices.

3.3.1.1 Electrical wiring

Do not install insulation in a manner that would sandwich electrical wiring between two layers of insulation.

3.3.1.2 Continuity of Insulation

Install blanket insulation to butt tightly against adjoining blankets and to studs, rafters, joists, sill plates, headers and any obstructions. Provide continuity and integrity of insulation at corners, wall to ceiling joints, roof, and floor. Avoid creating thermal bridges.

3.3.1.3 Installation at Bridging and Cross Bracing

Insulate at bridging and cross bracing by splitting blanket vertically at center and packing one half into each opening. Butt insulation at bridging and cross bracing; fill in bridged area with loose or scrap insulation.

3.3.1.4 Insulation without Affixed Vapor Retarder

Provide snug friction fit to hold insulation in place. Stuff pieces of insulation into cracks between trusses, joists, studs and other framing, such as at attic access doors, door and window heads, jambs, and sills, band joists, and headers.

3.3.1.5 Sizing of Blankets

Provide only full width blankets when insulating between trusses, joists, or studs. Size width of blankets for a snug fit where trusses, joists or studs are irregularly spaced.

3.3.1.6 Installation of Sill Sealer

Size sill sealer insulation and place insulation over top of masonry or concrete perimeter walls or concrete perimeter floor slab on grade. Fasten sill plate over insulation.

3.3.1.7 Access Panels and Doors

If not otherwise insulated, affix blanket insulation or rigid foam insulation to access panels greater than one square foot and access doors in insulated floors and ceilings.

-- End of Section --

THIS PAGE HAS BEEN INTENTIONALLY LEFT BLANK

SECTION 07 42 13

COMPOSITE METAL WALL PANELS
05/11

PART 1 GENERAL

1.1 REFERENCES

The publications listed below form a part of this specification to the extent referenced. The publications are referred to within the text by the basic designation only.

AMERICAN ARCHITECTURAL MANUFACTURERS ASSOCIATION (AAMA)

AAMA 501.1	(2005) Standard Test Method for Water Penetration of Windows, Curtain Walls and Doors Using Dynamic Pressure
AAMA 800	(2010) Voluntary Specifications and Test Methods for Sealants

AMERICAN IRON AND STEEL INSTITUTE (AISI)

AISI S100	(2012) North American Specification for the Design of Cold-Formed Steel Structural Members

AMERICAN SOCIETY OF CIVIL ENGINEERS (ASCE)

ASCE 7	(2010; Errata 2011; Supp 1 2013) Minimum Design Loads for Buildings and Other Structures

ASTM INTERNATIONAL (ASTM)

ASTM A1008/A1008M	(2015) Standard Specification for Steel, Sheet, Cold-Rolled, Carbon, Structural, High-Strength Low-Alloy and High-Strength Low-Alloy with Improved Formability, Solution Hardened, and Bake Hardened
ASTM A36/A36M	(2014) Standard Specification for Carbon Structural Steel
ASTM A463/A463M	(2010) Standard Specification for Steel Sheet, Aluminum-Coated, by the Hot-Dip Process
ASTM A606/A606M	(2009a) Standard Specification for Steel Sheet and Strip, High-Strength, Low-Alloy, Hot-Rolled and Cold-Rolled, with Improved Atmospheric Corrosion Resistance
ASTM A653/A653M	(2015) Standard Specification for Steel Sheet, Zinc-Coated (Galvanized) or Zinc-Iron Alloy-Coated (Galvannealed) by the Hot-Dip Process

ASTM A924/A924M	(2014) Standard Specification for General Requirements for Steel Sheet, Metallic-Coated by the Hot-Dip Process
ASTM B117	(2011) Standard Practice for Operating Salt Spray (Fog) Apparatus
ASTM C920	(2014a) Standard Specification for Elastomeric Joint Sealants
ASTM D1056	(2014) Standard Specification for Flexible Cellular Materials - Sponge or Expanded Rubber
ASTM D1308	(2013) Effect of Household Chemicals on Clear and Pigmented Organic Finishes
ASTM D1654	(2008) Evaluation of Painted or Coated Specimens Subjected to Corrosive Environments
ASTM D1667	(2005; R 2011) Flexible Cellular Materials - Poly (Vinyl Chloride) Foam (Closed-Cell)
ASTM D1781	(1998; R 2012) Standard Test Method for Climbing Drum Peel for Adhesives
ASTM D2244	(2014) Calculation of Color Tolerances and Color Differences from Instrumentally Measured Color Coordinates
ASTM D2794	(1993; R 2010) Resistance of Organic Coatings to the Effects of Rapid Deformation (Impact)
ASTM D4214	(2007; R 2015) Standard Test Method for Evaluating the Degree of Chalking of Exterior Paint Films
ASTM D4587	(2011) Standard Practice for Fluorescent UV-Condensation Exposures of Paint and Related Coatings
ASTM D522/D522M	(2014) Mandrel Bend Test of Attached Organic Coatings
ASTM D523	(2014) Standard Test Method for Specular Gloss
ASTM D5894	(2010) Cyclic Salt Fog/UV Exposure of Painted Metal, (Alternating Exposures in a Fog/Dry Cabinet and a UV/Condensation Cabinet)
ASTM D610	(2008; R 2012) Evaluating Degree of Rusting on Painted Steel Surfaces
ASTM D714	(2002; R 2009) Evaluating Degree of

	Blistering of Paints
ASTM D968	(2015) Abrasion Resistance of Organic Coatings by Falling Abrasive
ASTM E108	(2011) Fire Tests of Roof Coverings
ASTM E1592	(2005; R 2012) Structural Performance of Sheet Metal Roof and Siding Systems by Uniform Static Air Pressure Difference
ASTM E283	(2004; R 2012) Determining the Rate of Air Leakage Through Exterior Windows, Curtain Walls, and Doors Under Specified Pressure Differences Across the Specimen
ASTM E331	(2000; R 2009) Water Penetration of Exterior Windows, Skylights, Doors, and Curtain Walls by Uniform Static Air Pressure Difference
ASTM E72	(2014a) Conducting Strength Tests of Panels for Building Construction
ASTM E84	(2015b) Standard Test Method for Surface Burning Characteristics of Building Materials
ASTM G152	(2013) Operating Open Flame Carbon Arc Light Apparatus for Exposure of Nonmetallic Materials
ASTM G153	(2013) Operating Enclosed Carbon Arc Light Apparatus for Exposure of Nonmetallic Materials

METAL BUILDING MANUFACTURERS ASSOCIATION (MBMA)

MBMA MBSM	(2002) Metal Building Systems Manual

NATIONAL ASSOCIATION OF ARCHITECTURAL METAL MANUFACTURERS (NAAMM)

NAAMM AMP 500	(2006) Metal Finishes Manual

SHEET METAL AND AIR CONDITIONING CONTRACTORS' NATIONAL ASSOCIATION (SMACNA)

SMACNA 1793	(2012) Architectural Sheet Metal Manual, 7th Edition

U.S. GREEN BUILDING COUNCIL (USGBC)

LEED NC	(2009) Leadership in Energy and Environmental Design(tm) New Construction Rating System

UNDERWRITERS LABORATORIES (UL)

UL 94	(2013; Reprint Jul 2015) Standard for

Tests for Flammability of Plastic Materials for Parts in Devices and Appliances

1.2 DEFINITIONS

Metal Wall Panel: Metal wall panels, attachment system components and accessories necessary for a complete weather-tight wall system.

1.3 DESCRIPTION OF WALL PANEL SYSTEM

Composite lightweight exterior cladding panel system. Panels consist of a thermoplastic core material, thermally bonded to aluminum face sheets with fluoropolymer paint finish. Composite metal panels to be manufactured, fabricated and installed to withstand loads from deflection and thermal movement and to maintain performance criteria stated by manufacturer without defects, damage or failure. Thickness, finish and color to be selected from manufactures standards.

1.3.1 Metal Wall Panel General Performance

Comply with performance requirements, conforming to AISI S100, without failure due to defective manufacture, fabrication, installation, or other defects in construction. Wall panels and accessory components must conform to the following standards:

ASTM A1008/A1008M
ASTM A36/A36M
ASTM A653/A653M
ASTM A463/A463M for aluminum coated steel sheet
ASTM A606/A606M
ASTM A924/A924M for metallic coated steel sheet

1.3.2 Structural Performance

Maximum calculated fiber stress must not exceed the allowable value in the AISI or AA manuals; a one third overstress for wind is allowed. Midspan deflection under maximum design loads is limited to L/180. Contract drawings show the design wind loads and the extent and general assembly details of the metal siding. Contractor must provide design for members and connections not shown on the drawings. Siding panels and accessories must be the products of the same manufacturer.

Provide metal wall panel assemblies complying with the load and stress requirements in accordance with ASTM E1592. Wind Load force due to wind action governs the design for panels.

Wall systems and attachments are to resist the wind loads as determined by ASTM E72 and ASCE 7 in the geographic area where the construction will take place, in pounds per square foot. Submit five copies of wind load tests and seismic tests to the Contracting Officer.

1.3.3 Air Infiltration

Air leakage must conform to the limits through the wall assembly area when tested according to ASTM E283.

1.3.4 Water Penetration Under Static Pressure

No water penetration when tested according to ASTM E331.

1.3.5 Water Penetration Under Dynamic Pressure

No evidence of water leakage when tested according to AAMA 501.1.

1.4 SUBMITTALS

Government approval is required for submittals with a "G" designation; submittals not having a "G" designation are for Contractor Quality Control approval. Submit the following in accordance with Section 01 33 00 SUBMITTAL PROCEDURES:

SD-01 Preconstruction Submittals

Submit Documentation for the following items:

Qualification of Manufacturer; G
Qualification of Installation Contractor; G

Sample Warranty; G

SD-02 Shop Drawings

Installation Drawings ; G

SD-03 Product Data

Recycled Content; (LEED NC)

Submit Manufacturer's data indicating percentage of recycle material in wall panels to verify sustainable acquisition compliance.

Submit Manufacturer's catalog data for the following items:

Wall Panels ; G

Factory Color Finish
Closure Materials
Pressure Sensitive Tape
Sealants and Caulking

Accessories

SD-04 Samples

Submit as required each of the following samples:

Wall Panels, 12 inches long by actual panel width; G
Fasteners; G
Metal Closure Strips, 10 inches long of each type; G

Color chart and chips ; G

Submit manufacturer's color charts and chips, approximately 4 by 4 inches, showing full range of colors, textures and patterns

available for wall panels with factory applied finishes.

SD-05 Design Data

Wind load design analysis ; G

As applicable, submit the following wind load design analysis data, to include, but not limited to:

wind speed
exposure category,co-efficient,importance factor
type of facility
negative pressures for each zone
methods and requirements of attachment

SD-06 Test Reports

Submit test reports for the following in accordance with the referenced articles in this section.

Leakage Tests; G
Wind Load Tests; G
Coating Tests; G
Chalking Tests; G
Seismic Tests; G

SD-07 Certificates

LEED Documentation; G
Submit Manufacturer's data indicating percentage of recycle material in wall panels to verify sustainable acquisition compliance.

Submit certificates for the following items showing conformance with referenced standards contained in this section:

Fasteners

SD-08 Manufacturer's Instructions

Include detailed application instructions and standard manufacturer drawings altered as required by these specifications.

Installation of Wall panels; G

SD-09 Manufacturer's Field Reports

Submit 5 bound copies of the Manufacturer's Field Reports; G

SD-11 Closeout Submittals

Warranty; G
Maintenance Instructions; G

20 year "No Dollar Limit" warranty for labor and material

1.5 QUALITY ASSURANCE

1.5.1 Pre-Installation Conference

Upon notification of submittal receipt and approval by the Contracting Officer; and prior to the commencement of the work, the Contractor must attend a pre-installation conference to review the following:

a. Drawings and Specifications.

b. Qualification of Installer.

c. Sustainable acquisition

d. Approved Warranty

e. Sample Wall Panels, 12 inches long by actual panel width

f. Sample metal closure strips, 10 inches long of each type

g. Color charts and chips

h. Coatings and base metal tests, chalking tests

i. Construction schedule, availability of materials, Installer's personnel, equipment and facilities required to progress with the work without delay.

j. Methods and procedures related to installation of wall panels, including manufacturer's written instructions. Explicitly identify in writing, differences between manufacturer's instructions and the specified requirements.

k. Support conditions for compliance with requirements, including alignment between and attachment to structural members.

l. Flashing, special siding details, wall penetrations, openings, and condition of other construction that will affect metal wall panels.

m. Governing regulations and requirements for insurance, certificates, and tests and inspections if applicable.

n. Temporary protection requirements for metal wall panel assembly during and after installation.

o. Wall panel observation and repair procedures after metal wall panel installation. Provide detailed written instructions including copies of Material Safety Data Sheets for maintenance and repair materials, and manufacturer's maintenance instructions.

1.5.1.1 Installation Drawings

Installation shop drawings for wall panels, flashing, accessories, and anchorage systems must indicate completely dimensioned structural frame and erection layouts, openings in the wall, special framing details, and construction details at corners, building intersections and flashing, location and type of mastic and metal filler strips.

1.5.1.2 Wind Load Design Analysis

Wind design analysis must include wall plan delineating dimensions and attachment patterns for each zone. Wind design analysis must be prepared and sealed by Licensed Project Engineer in the geographic area where the construction will take place.

1.5.2 Manufacturer's Technical Representative

The representative must have authorization from manufacturer to approve field changes and be thoroughly familiar with the products and installations in the geographical area where construction will take place.

1.5.3 Qualification of Manufacturer

Certify that metal wall panel system manufacturer has a minimum of five (5) years experience in manufacturing metal wall system and accessory products.

Manufacturer must also provide engineering services by an authorized engineer; currently licensed in the geographical area where construction will take place, having a minimum of four (4) years experience as an engineer knowledgeable in wind load design analysis, protocols and procedures per MBMA MBSM, "Metal Building Systems Manual"; ASCE 7, and ASTM E1592.

Provide certified engineering calculations, using the products submitted, for Wind load requirements in accordance with ASCE 7.

1.5.3.1 Manufacturer's Certificates

Also provide the following certifications from the manufacturer:

Product certificates signed by manufacturer certifying materials comply with specified performance characteristics and physical requirements.

Fasteners

Submit certification from coil stock manufacturer or supplier that the machinery used will form the provided coil stock without warping, waviness, or rippling that is not a part of the panel profile, and without damage, abrasion or marring of the finish coating.

Provide evidence that products used within this specification are manufactured in the United States.

1.5.4 Certified Qualification of Installation Contractor

The installation contractor must be approved and certified by the panel manufacturer prior to beginning the installation of the system. Installation contractor must have at least 3 years of experience on similar sized metal panel projects and qualified by the composite panel manufacturer; contractor must be capable of providing field service representation during construction. Subcontracting by Certified Contractor for the metal wall panel work is not permitted.

1.5.5 Single Source

Obtain each type of metal wall panels, clips, closure materials and other accessories from the standard products of the single source from a single

manufacturer to operate as a complete system for the intended use.

1.5.6 Manufacturer's Maintenance Instructions

Provide manufacturer's detailed written instructions including copies of Material Safety Data Sheets for maintenance and repair materials.

1.5.6.1 LEED Documentation

Product Data for LEED Credit Materials & Resources 4.1 and Credit Materials & Resources 4.2: For products having recycled content, documentation indicating percentages by weight of post-consumer and pre-consumer recycled content. Include statement indicating costs for each product having recycled content.

Product Data for LEED Credit Materials & Resources 5.1 and Credit Materials & Resources 5.2: For products manufactured within 500 miles of project site, documentation indicating manufacturing location. Include statement indicating costs for each product manufactured within 500 miles of project site.

Product Data for LEED Credit Sustainable Sites 7.2: For products meeting reflectivity and emissivity requirements, including manufacturer's testing data.

1.6 DELIVERY, HANDLING, AND STORAGE

Deliver and protect package components, sheets, metal wall panels, and other manufactured items to prevent damage or deformation during transportation and handling.

Unload, store, and erect metal wall panels in a manner to prevent bending, warping, twisting, and surface damage.

Stack and store metal wall panels horizontally on platforms or pallets, covered with suitable weather-tight and ventilated covering to ensure dryness, with positive slope for drainage of water. Do not store metal wall panels in contact with other materials that might cause staining, denting, or other surface damage.

Retain strippable protective covering on metal wall panel until actual installation.

1.7 PROJECT CONDITIONS

1.7.1 Field Measurements

Verify locations of wall framing and opening dimensions by field measurements before metal wall panel fabrication and indicate measurements on Shop Drawings.

1.7.2 Weather Limitations

Proceed with installation preparation only when existing and forecasted weather conditions permit Work to proceed without water entering into wall system or building.

1.8 WARRANTY

Warranty must conform to the Sample Warranty as reviewed and approved by the Contracting Officer.

1.8.1 20 Year "No Dollar Limit" Warranty for Labor and Material

Furnish manufacturer's no-dollar-limit warranty for the metal wall panel system. The warranty period is to be no less than twenty (20) years from the date of Government acceptance of the work. The warranty is to be issued directly to the Government. The warranty is to provide that if within the warranty period the metal wall panel system shows evidence of corrosion, perforation, rupture or excess weathering due to deterioration of the wall panel system resulting from defective materials and correction of the defective workmanship is to be the responsibility of the metal wall panel system manufacturer. Repairs that become necessary because of defective materials and workmanship while metal wall panel system is under warranty are to be performed within 24 hours after notification, unless additional time is approved by the Contracting Officer. Failure to perform repairs within 24 hours of notification will constitute grounds for having emergency repairs performed by others and not void the warranty.

PART 2 PRODUCTS

2.1 COMPOSITE METAL PANELS

Unless approved otherwise, fabricate and finish metal wall panels and accessories at the factory to greatest extent possible, by manufacturer's standard procedures and processes and as necessary to fulfill indicated and specified performance requirements. Comply with indicated profiles and with dimensional and structural requirements. See section 01 33 29 LEED(tm) DOCUMENTATION for cumulative total recycled content requirements.

a. Thermally bonded in a continuous process, under tension, to the core material.

b. Bond Integrity; Tested for resistance to delamination
   1. Peel Strength (ASTM D1781): 22.5 in-lb/in minimum.
   2. No degradation in bond performance after 8 hours of submersion in boiling water and after 21 days of immersion in water at 70 degrees F

c. Fire Performance:
   1. Flamespread (ASTM E84): 25 maximum
   2. Smoke Developed (ASTM E84): 450 maximum
   3. Surface Flammability (Modified ASTM E108): Pass
   4. V-O Rating: Comply with UL 94.

d. Production Tolerances:
   1. Width: +/- 2 mm.
   2. Length: +/- 4 mm.
   3. Thickness (4 mm Panel): +/- 0.008 inch
   4. Thickness (6 mm Panel): +/- 0.012 inch
   5. Bow: Maximum 0.5% length or width.
   6. Squareness: Maximum 0.2 inch
   7. Edges of sheets shall be square and trimmed.

2.1.1 Factory Color Finish

Comply with NAAMM AMP 500 for recommendations for applying and designating finishes. Noticeable variations in same piece are not acceptable. Variations in appearance of adjoining components are acceptable if they are within the range of approved samples and are assembled or installed to minimize contrast.

All panels are to receive a factory-applied polyvinylidene fluoride or fluoropolymer finish consisting of a baked-on top-coat with a manufacturer's recommended prime coat conforming to the following:

2.1.2 Metal Preparation

Carefully prepare all metal surface for painting on a continuous process coil coating line by alkali cleaning, hot water rinsing, application of chemical conversion coating, cold water rinsing, sealing with acid rinse, and thorough drying.

2.1.3 Prime Coating

Carefully prepare all metal surface for painting on a continuous process coil coating line by alkali cleaning, hot water rinsing, application of chemical conversion coating, cold water rinsing, sealing with acid rinse, and thorough drying.

2.1.4 Exterior Finish Coating

Roll coat the finish coating over the primer by roll coating to dry film thickness of 0.80 plus 5 mils (3.80 plus 0.50 mils for Vinyl Plastisol) for a total dry film thickness of 1.00 plus 0.10 mils (4.00 plus 0.10 mils for Vinyl Plastisol). Oven-cure finish coat.

2.1.5 Interior Finish Coating

Apply a wash-coat on the reverse side over the primer by roll coating to a dry film thickness of 0.30 plus 0.05 mils for a total dry film thickness of 0.50 plus 0.10 mils. Oven-cured the wash coat.

2.1.6 Color

Provide exterior finish color as selected by the architect of record and the Contracting Officer from the manufacturer's standard color chart.

2.1.7 Physical Properties

Coating must conform to the industry and manufacturer's standard performance criteria as listed by the following certified test reports:

General: ASTM D4587.
Abrasion: ASTM D968
Chalking: ASTM D4214
Chemical Pollution: ASTM D1308
Color Change and Conformity: ASTM D2244
Creepage: ASTM D1654
Cyclic Corrosion Test: ASTM D5894
Flame Spread: ASTM E84
Formability: ASTM D522/D522M
Gloss at 60 and 85 degrees: ASTM D523

Humidity: ASTM D714
Oxidation: ASTM D610
Reverse Impact: ASTM D2794
Salt Spray: ASTM B117
Weatherometer: ASTM G152 and ASTM G153

2.2 MISCELLANEOUS METAL FRAMING

Cold-formed metallic-coated steel sheet conforming to ASTM A653/A653M and specified in Section 05 40 00 COLD-FORMED METAL FRAMING unless otherwise indicated.

2.2.1 Fasteners for Miscellaneous Metal Framing

Type, material, corrosion resistance, size and sufficient length to penetrate the supporting member a minimum of 1 inch with other properties required to fasten miscellaneous metal framing members to supporting members and substrates in accordance with the wall panel manufacturer's and ASCE 7 requirements.

2.3 FASTENERS

2.3.1 General

2.3.1.1 Exposed Fasteners

Provide corrosion resistant fasteners for wall panels, made of coated steel, aluminum, 300 - series corrosion resisting stainless steel, or nylon capped steel compatible with the sheet panel or flashing and of a type and size recommended by the manufacturer to meet the performance requirements and design loads.

Fasteners for accessories must be the manufacturer's standard. Provide an integral metal washer matching the color of attached material with compressible sealing EPDM gasket approximately 3/32 inch thick.

2.3.1.2 Hidden Fasteners

Provide corrosion resistant fasteners recommended by the manufacturer to meet the performance requirements and design loads.

2.3.1.3 Screws

Screws to be corrosion resistant coated steel, aluminum and/or 300 - series stainless steel being the type and size recommended by the manufacturer to meet the performance requirements.

2.3.1.4 Rivets

Rivets to be closed-end type, corrosion resistant coated steel, aluminum or stainless steel where watertight connections are required.

2.3.1.5 Attachment Clips

Fabricate clips from steel hot-dipped galvanized in accordance with ASTM A653/A653M, Z275 G 90 or Series 300 stainless steel. Size, shape, thickness and capacity as required meeting the insulation thickness and design load criteria specified.

2.4 ACCESSORIES

2.4.1 General

All accessories must be compatible with the metal wall panels. Sheet metal flashing, trim, metal closure strips, caps and similar metal accessories must not be less than the minimum thickness specified for the wall panels. Exposed metal accessories/finishes to match the panels furnished, except as otherwise indicated. Molded foam rib, ridge and other closure strips must be non-absorbent closed-cell or solid-cell synthetic rubber or pre-molded neoprene to match configuration of the panels.

2.4.2 Rubber Closure Strips

Provide closed-cell, expanded cellular rubber conforming to ASTM D1056 and ASTM D1667; extruded or molded to the configuration of the specified wall panel and in lengths supplied by the wall panel manufacturer.

2.4.3 Metal Closure Strips

Provide factory fabricated closure strips to be the same color, finish and profile of the specified wall panel.

2.4.4 Joint Sealants

2.4.4.1 Sealants and Caulking

Provide approved gun type sealants for use in hand- or air-pressure caulking guns at temperatures above 4 degrees C (or frost-free application at temperatures above 10 degrees F with minimum solid content of 85 percent of the total volume. Sealants must dry with a tough, durable surface skin which permit remaining soft and pliable underneath, providing a weather-tight joint. No migratory staining is permitted on painted or unpainted metal, stone, glass, vinyl, or wood.

Prime all joints receiving sealants with a compatible one-component or two-component primer as recommended by the wall panel manufacturer.

2.4.4.2 Shop-Applied

Sealant for shop-applied caulking must be non-curing butyl compliant with AAMA 800 to ensure the sealant's plasticity at the time of field erection.

2.4.4.3 Field-Applied

Sealant for field-applied caulking must be an approved gun grade, non-sag one component polysulfide or two-component polyurethane with an initial maximum Shore A durometer hardness of 25, and conforming to ASTM C920, Type II. Color to match panel colors.

2.4.4.4 Pressure Sensitive Tape

Provide pressure sensitive tape sealant, 100 percent solid with a release paper backing; permanently elastic, non-sagging, non-toxic and non-staining as approved by the wall panel manufacturer.

2.5 SHEET METAL FLASHING AND TRIM

2.5.1 Fabrication

Shop fabricate sheet metal flashing and trim where practicable to comply with recommendations in SMACNA 1793 that apply to design, dimensions, metal, and other characteristics of item indicated. Obtain field measurements for accurate fit before shop fabrication.

Fabricate sheet metal flashing and trim without excessive oil canning, buckling, and tool marks and true to line and levels indicated, with exposed edges folded back to form hems.

2.6 REPAIR OF FINISH PROTECTION

Repair paint for color finish enameled wall panel must be compatible paint of the same formula and color as the specified finish furnished by the wall panel manufacturer. Provide 2 pints of repair paint matching the specified wall panels.

PART 3 EXECUTION

3.1 EXAMINATION

Examine substrates, areas, and conditions, with Installer present, for compliance with requirements for installation tolerances, metal wall panel supports, and other conditions affecting performance of the Work.

Examine primary and secondary wall framing to verify that rafters, purlins, angles, channels, and other structural panel support members and anchorages have been installed within alignment tolerances required by metal wall panel manufacturer, UL, ASTM, ASCE 7 and as required for the geographical area where construction will take place.

Examine solid wall sheathing to verify that sheathing joints are supported by framing or blocking and that installation is within flatness tolerances required by metal wall panel manufacturer.

Examine roughing-in for components and systems penetrating metal wall panels to verify actual locations of penetrations relative to seam locations of metal wall panels before metal wall panel installation.

Submit to the Contracting Officer a written report, endorsed by Installer, listing conditions detrimental to performance of the Work. Proceed with installation only after unsatisfactory conditions have been corrected.

3.2 PREPARATION

Clean substrates of substances harmful to insulation, including removing projections capable of interfering with insulation attachment. Miscellaneous framing installation, including sub-purlins, girts, angles, furring, and other miscellaneous wall panel support members and anchorage must be according to metal wall panel manufacturer's written instructions.

3.3 WALL PANEL INSTALLATION

Provide full length metal wall panels, from sill to eave as indicated, unless otherwise indicated or restricted by shipping limitations. Anchor metal wall panels and other components of the Work securely in place, with

provisions for thermal and structural movement in accordance with MBMA MBSM.

Erect wall panel system in accordance with the approved erection drawings, the printed instructions and safety precautions of the manufacturer.

Sheets are not to be subjected to overloading, abuse, or undue impact. Bent, chipped, or defective sheets shall not be applied.

Sheets must be erected true and plumb and in exact alignment with the horizontal and vertical edges of the building, securely anchored, and with the indicated eave, and sill.

Work is to allow for thermal movement of the wall panel, movement of the building structure, and to provide permanent freedom from noise due to wind pressure.

Field cutting metal wall panels by torch is not permitted.

3.3.1 Aluminum Wall Panels

Use stainless-steel fasteners for exterior surfaces and aluminum or galvanized steel fasteners for interior surfaces.

3.3.2 Anchor Clips

Anchor metal wall panels and other components of the Work securely in place, using manufacturer's approved fasteners according to manufacturers' written instructions.

3.3.3 Metal Protection

Where dissimilar metals will contact each other or corrosive substrates, protect against galvanic action by painting contact surfaces with bituminous coating, by applying rubberized-asphalt underlayment to each contact surface, or by other permanent separation as recommended by metal wall panel manufacturer.

3.3.4 Joint Sealers

Install gaskets, joint fillers, and sealants where indicated and where required for weatherproof performance of metal wall panel assemblies. Provide types of gaskets, fillers, and sealants indicated or, if not indicated, types recommended by metal wall panel manufacturer.

3.4 FASTENER INSTALLATION

Anchor metal wall panels and other components of the Work securely in place, using manufacturer's approved fasteners according to manufacturers' written instructions.

3.5 FLASHING, TRIM AND CLOSURE INSTALLATION

3.5.1 General Requirements

Comply with performance requirements, manufacturer's written installation instructions, and SMACNA 1793. Provide concealed fasteners where possible, and set units true to line and level as indicated. Install work with laps, joints, and seams to form permanently watertight and weather resistant.

Install sheet metal work is to form weather-tight construction without waves, warps, buckles, fastening stresses or distortion, and allow for expansion and contraction. Cutting, fitting, drilling, and other operations in connection with sheet metal required to accommodate the work of other trades is to be performed by sheet metal mechanics.

3.5.2 Metal Flashing

Install exposed metal flashing at building corners, sills and eaves, junctions between metal siding and walling. Exposed metal flashing must be the same material, color, and finish as the specified metal wall panel.

Fasten flashing at a minimum of 8 inches on center, except where flashing is held in place by the same screws that secure covering sheets.

Flashing is to be furnished in at least 8 foot lengths. Exposed flashing is to have 1 inch locked and blind-soldered end joints, and expansion joints at intervals of not more than 16 feet.

Exposed flashing and flashing subject to rain penetration to be bedded in the specified joint sealant.

Isolate flashing which is in contact with dissimilar metals by means of the specified asphalt mastic material to prevent electrolytic deterioration.

Form drips to the profile indicated, with the edge folded back 1/2 inch to form a reinforced drip edge.

3.5.3 Closures

Install metal closure strips at open ends of corrugated or ribbed pattern walls, and at intersection of wall and wall unless open ends are concealed with formed eave flashing; and in other required areas.

Install mastic closure strips at intersection of the wall with metal walling; top and bottom of metal siding; heads of wall openings; and in other required locations.

3.6 WORKMANSHIP

Make lines, arises, and angles sharp and true. Free exposed surfaces from visible wave, warp, buckle, and tool marks. Fold back exposed edges neatly to form a 1/2 inch hem on the concealed side. Make sheet metal exposed to the weather watertight with provisions for expansion and contraction.

Make surfaces to receive sheet metal plumb and true, clean, even, smooth, dry, and free of defects and projections which might affect the application. For installation of items not shown in detail or not covered by specifications conform to the applicable requirements of SMACNA 1793. Provide sheet metal flashing in the angles formed where roof decks abut walls, curbs, ventilators, pipes, or other vertical surfaces and wherever indicated and necessary to make the work watertight.

3.7 ACCEPTANCE PROVISIONS

3.7.1 Erection Tolerances

Erect metal wall panels straight and true with plumb vertical lines correctly lapped and secured in accordance with the manufacturer's written

instructions.

3.7.2 Leakage Tests

Finished application of metal wall panels are to be subject to inspection and test for leakage by request of the Contracting Officer, Architect/Engineer. Conduct inspection and tests at no cost to the Government.

Inspection and testing is to be made promptly after erection to permit correction of defects and the removal and replacement of defective materials.

3.7.3 Repairs to Finish

Scratches, abrasions, and minor surface defects of finish may be repaired with the specified repair materials. Finished repaired surfaces must be uniform and free from variations of color and surface texture.

Repaired metal surfaces that are not acceptable to the project requirements and/or Contracting Officer are to be immediately removed and replaced with new material.

3.7.4 Paint-Finish Metal Siding

Paint-finish metal siding will be tested for color stability by the Contracting Officer during the manufacturer's specified guarantee period.

Panels that indicate color changes, fading, or surface degradation, determined by visual examination, must be removed and replaced with new panels at no expense to the Government.

New panels will be subject to the specified tests for an additional year from the date of their installation.

3.8 FIELD QUALITY CONTROL

3.8.1 Construction Monitoring

Make visual inspections as necessary to ensure compliance with specified requirements. Additionally, verify the following:

a. Materials comply with the specified requirements.

b. All materials are properly stored, handled and protected from damage. Damaged materials are removed from the site.

c. Framing and substrates are in acceptable condition, in compliance with specification, prior to application of wall panels.

d. Panels are installed without buckles, ripples, or waves and in uniform alignment and modulus.

e. Side laps are formed, sealed, fastened or seam locked as required.

f. The proper number, type, and spacing of attachment clips and fasteners are installed.

g. Installer adheres to specified and detailed application parameters.

h. Associated flashing and sheet metal are installed in a timely manner in accord with the specified requirements.

Provide five bound copies of Manufacturer's Field Reports to the Contracting Officer two weeks prior to project close-out.

3.9 CLEAN-UP AND DISPOSAL

Clean all exposed sheet metal work at completion of installation. Remove metal shavings, filings, nails, bolts, and wires from work area. Remove grease and oil films, excess sealants, handling marks, contamination from steel wool, fittings and drilling debris and scrub the work clean. Exposed metal surfaces must be free of dents, creases, waves, scratch marks, solder or weld marks, and damage to the finish coating.

Collect and place scrap/waste materials in containers. Promptly dispose of demolished materials. Do not allow demolished materials to accumulate on-site; transport demolished materials from government property and legally dispose of them.

-- End of Section --

SECTION 07 60 00

FLASHING AND SHEET METAL
08/08

PART 1 GENERAL

1.1 REFERENCES

The publications listed below form a part of this specification to the extent referenced. The publications are referred to within the text by the basic designation only.

AMERICAN WELDING SOCIETY (AWS)

AWS D1.2/D1.2M	(2014) Structural Welding Code - Aluminum

ASTM INTERNATIONAL (ASTM)

ASTM A167	(2011) Standard Specification for Stainless and Heat-Resisting Chromium-Nickel Steel Plate, Sheet, and Strip
ASTM A308/A308M	(2010) Standard Specification for Steel Sheet, Terne (Lead-Tin Alloy) Coated by the Hot Dip Process
ASTM A653/A653M	(2015) Standard Specification for Steel Sheet, Zinc-Coated (Galvanized) or Zinc-Iron Alloy-Coated (Galvannealed) by the Hot-Dip Process
ASTM B101	(2012) Standard Specification for Lead-Coated Copper Sheet and Strip for Building Construction
ASTM B209	(2014) Standard Specification for Aluminum and Aluminum-Alloy Sheet and Plate
ASTM B221	(2014) Standard Specification for Aluminum and Aluminum-Alloy Extruded Bars, Rods, Wire, Profiles, and Tubes
ASTM B32	(2008; R 2014) Standard Specification for Solder Metal
ASTM B370	(2012) Standard Specification for Copper Sheet and Strip for Building Construction
ASTM B69	(2013) Standard Specification for Rolled Zinc
ASTM D1784	(2011) Standard Specification for Rigid Poly(Vinyl Chloride) (PVC) Compounds and Chlorinated Poly(Vinyl Chloride) (CPVC) Compounds

ASTM D226/D226M	(2009) Standard Specification for Asphalt-Saturated Organic Felt Used in Roofing and Waterproofing
ASTM D41/D41M	(2011) Asphalt Primer Used in Roofing, Dampproofing, and Waterproofing
ASTM D4586/D4586M	(2007; E 2012; R 2012) Asphalt Roof Cement, Asbestos-Free

SHEET METAL AND AIR CONDITIONING CONTRACTORS' NATIONAL ASSOCIATION (SMACNA)

SMACNA 1793	(2012) Architectural Sheet Metal Manual, 7th Edition

1.2 GENERAL REQUIREMENTS

Finished sheet metalwork will form a weathertight construction without waves, warps, buckles, fastening stresses or distortion, which allows for expansion and contraction. Sheet metal mechanic is responsible for cutting, fitting, drilling, and other operations in connection with sheet metal required to accommodate the work of other trades. Coordinate installation of sheet metal items used in conjunction with roofing with roofing work to permit continuous roofing operations.

1.3 SUBMITTALS

Government approval is required for submittals with a "G" designation; submittals not having a "G" designation are for Contractor Quality Control approval. Submit the following in accordance with Section 01 33 00 SUBMITTAL PROCEDURES:

SD-02 Shop Drawings

Covering on flat, sloped, or curved surfaces

Gutters

Downspouts

Expansion joints

Gravel stops and fascias

Base flashing

Counterflashing

Flashing at roof penetrations

Reglets

Copings

Drip edge

Open valley flashing

Eave flashing

Indicate thicknesses, dimensions, fastenings and anchoring methods, expansion joints, and other provisions necessary for thermal expansion and contraction. Scaled manufacturer's catalog data may be submitted for factory fabricated items.

SD-11 Closeout Submittals

Quality Control Plan

Submit for sheet metal work in accordance with paragraph entitled "Field Quality Control."

1.4 DELIVERY, HANDLING, AND STORAGE

Package and protect materials during shipment. Uncrate and inspect materials for damage, dampness, and wet-storage stains upon delivery to the job site. Remove from the site and replace damaged materials that cannot be restored to like-new condition. Handle sheet metal items to avoid damage to surfaces, edges, and ends. Store materials in dry, weather-tight, ventilated areas until immediately before installation.

PART 2 PRODUCTS

2.1 MATERIALS

Do not use lead, lead-coated metal, or galvanized steel. Use any metal listed by SMACNA Arch. Manual for a particular item, unless otherwise specified or indicated. Conform to the requirements specified and to the thicknesses and configurations established in SMACNA Arch. Manual for the materials. Different items need not be of the same metal, except that if copper is selected for any exposed item, all exposed items must be copper.

Furnish sheet metal items in 8 to 10 foot lengths. Single pieces less than 8 feet long may be used to connect to factory-fabricated inside and outside corners, and at ends of runs. Factory fabricate corner pieces with minimum 12 inch legs. Provide accessories and other items essential to complete the sheet metal installation. Provide accessories made of the same or compatible materials as the items to which they are applied. Fabricate sheet metal items of the materials specified below and to the gage, thickness, or weight shown in Table I at the end of this section. Provide sheet metal items with mill finish unless specified otherwise. Where more than one material is listed for a particular item in Table I, each is acceptable and may be used except as follows:

2.1.1 Exposed Sheet Metal Items

Must be of the same material. Consider the following as exposed sheet metal: gutters, including hangers; downspouts; gravel stops and fascias; cap, valley, steeped, base, and eave flashings and related accessories.

2.1.2 Drainage

Do not use copper for an exposed item if drainage from that item will pass over exposed masonry, stonework or other metal surfaces. In addition to the metals listed in Table I, lead-coated copper may be used for such items.

2.1.3 Copper, Sheet and Strip

ASTM B370, cold-rolled temper, H 00 (standard).

2.1.4 Lead-Coated Copper Sheet

ASTM B101.

2.1.5 Lead Sheet

Minimum weight 4 pounds per square foot.

2.1.6 Steel Sheet, Zinc-Coated (Galvanized)

ASTM A653/A653M.

2.1.6.1 Finish

Exposed exterior items of zinc-coated steel sheet must have a baked-on, factory-applied color coating of polyvinylidene fluoride or other equivalent fluorocarbon coating applied after metal substrates have been cleaned and pretreated. Provide finish coating dry-film thickness of 0.8 to 1.3 mils and color to match roofing.

2.1.7 Zinc Sheet and Strip

ASTM B69, Type I, a minimum of 0.024 inch thick.

2.1.8 Stainless Steel

ASTM A167, Type 302 or 304, 2D Finish, fully annealed, dead-soft temper.

2.1.9 Terne-Coated Steel

Minimum of 14 by 20 inch with minimum of 40 pound coating per double base box. ASTM A308/A308M.

2.1.10 Aluminum Alloy Sheet and Plate

ASTM B209 anodized clear form alloy, and temper appropriate for use. See aluminum flashing required at exposed edge of floor slab along perimeter of the pre-engineered metal building.

2.1.10.1 Finish

Exposed exterior sheet metal items of aluminum must have a baked-on, factory-applied color coating of polyvinylidene fluoride (PVF2) or other equivalent fluorocarbon coating applied after metal substrates have been cleaned and pretreated. Provide finish coating dry-film thickness of 0.8 to 1.3 mils and color to match roofing.

2.1.11 Aluminum Alloy, Extruded Bars, Rods, Shapes, and Tubes

ASTM B221.

2.1.12 Solder

ASTM B32, 95-5 tin-antimony.

2.1.13 Polyvinyl Chloride Reglet

ASTM D1784, Type II, Grade 1, Class 14333-D, 0.075 inch minimum thickness.

2.1.14 Bituminous Plastic Cement

ASTM D4586/D4586M, Type I.

2.1.15 Roofing Felt

ASTM D226/D226M Type I or Type II as required.

2.1.16 Asphalt Primer

ASTM D41/D41M.

2.1.17 Fasteners

Use the same metal or a metal compatible with the item fastened. Use stainless steel fasteners to fasten dissimilar materials.

PART 3 EXECUTION

3.1 INSTALLATION

3.1.1 Metal Roofing

3.1.1.1 Standing-seam Method

Make standing seams parallel with slope of roof. Fabricate sheets into long lengths at shop by locking short dimensions together and thoroughly soldering joints thus formed. In applying metal, turn up one edge of course at each side seam at right angles 1.5 inch. Then install 2 by 3 inch cleats spaced 12 inch apart by fastening one end of each cleat to roof with two one inch long nails and folding roof end back over nail heads. Turn end adjoining turned-up side seam up over upstanding edge of course. Turn up adjoining edge of next course 1.75 inch and abutting upstanding edges locked, turned over, and flattened against one side of standing seam. Make standing seams straight, rounded neatly at the top edges, and stand about one inch above roof deck. All sheets must be same length, except as required to complete run or maintain pattern. Locate transverse joints of each panel half way between joints in adjacent sheets. Align joints of alternate sheets horizontally to produce uniform pattern, as shown in SMACNA Arch. Manual.

3.1.2 Workmanship

Make lines and angles sharp and true. Free exposed surfaces from visible wave, warp, buckle, and tool marks. Fold back exposed edges neatly to form a 1/2 inch hem on the concealed side. Make sheet metal exposed to the weather watertight with provisions for expansion and contraction.

Make surfaces to receive sheet metal plumb and true, clean, even, smooth, dry, and free of defects and projections. For installation of items not shown in detail or not covered by specifications conform to the applicable requirements of SMACNA 1793, Architectural Sheet Metal Manual. Provide sheet metal flashing in the angles formed where roof decks abut walls, curbs, ventilators, pipes, or other vertical surfaces and wherever indicated and necessary to make the work watertight. Join sheet metal

items together as shown in Table II.

3.1.3 Nailing

Confine nailing of sheet metal generally to sheet metal having a maximum width of 18 inch. Confine nailing of flashing to one edge only. Space nails evenly not over 3 inch on center and approximately 1/2 inch from edge unless otherwise specified or indicated. Face nailing will not be permitted. Where sheet metal is applied to other than wood surfaces, include in shop drawings, the locations for sleepers and nailing strips required to secure the work.

3.1.4 Cleats

Provide cleats for sheet metal 18 inch and over in width. Space cleats evenly not over 12 inch on center unless otherwise specified or indicated. Unless otherwise specified, provide cleats of 2 inch wide by 3 inch long and of the same material and thickness as the sheet metal being installed. Secure one end of the cleat with two nails and the cleat folded back over the nailheads. Lock the other end into the seam. Where the fastening is to be made to concrete or masonry, use screws and drive in expansion shields set in concrete or masonry. Pretin cleats for soldered seams.

3.1.5 Bolts, Rivets, and Screws

Install bolts, rivets, and screws where indicated or required. Provide compatible washers where required to protect surface of sheet metal and to provide a watertight connection. Provide mechanically formed joints in aluminum sheets 0.040 inch or less in thickness.

3.1.6 Seams

Straight and uniform in width and height with no solder showing on the face.

3.1.6.1 Flat-lock Seams

Finish not less than 3/4 inch wide.

3.1.6.2 Lap Seams

Finish soldered seams not less than one inch wide. Overlap seams not soldered, not less than 3 inch.

3.1.6.3 Loose-Lock Expansion Seams

Not less than 3 inch wide; provide minimum one inch movement within the joint. Completely fill the joints with the specified sealant, applied at not less than 1/8 inch thick bed.

3.1.6.4 Standing Seams

Not less than one inch high, double locked without solder.

3.1.6.5 Flat Seams

Make seams in the direction of the flow.

3.1.7 Soldering

Where soldering is specified, apply to copper, terne-coated stainless steel, zinc-coated steel, and stainless steel items. Pretin edges of sheet metal before soldering is begun. Seal the joints in aluminum sheets of 0.040 inch or less in thickness with specified sealants. Do not solder aluminum.

3.1.7.1 Edges

Scrape or wire-brush the edges of lead-coated material to be soldered to produce a bright surface. Flux brush the seams in before soldering. Treat with soldering acid flux the edges of stainless steel to be pretinned. Seal the joints in aluminum sheets of 0.040 inch or less in thickness with specified sealants. Do not solder aluminum.

3.1.8 Welding and Mechanical Fastening

Use welding for aluminum of thickness greater than 0.040 inch. Aluminum 0.040 inch or less in thickness must be butted and the space backed with formed flashing plate; or lock joined, mechanically fastened, and filled with sealant as recommended by the aluminum manufacturer.

3.1.8.1 Welding of Aluminum

Use welding of the inert gas, shield-arc type. For procedures, appearance and quality of welds, and the methods used in correcting welding work, conform to AWS D1.2/D1.2M.

3.1.8.2 Mechanical Fastening of Aluminum

Use No. 12, aluminum alloy, sheet metal screws or other suitable aluminum alloy or stainless steel fasteners. Drive fasteners in holes made with a No. 26 drill in securing side laps, end laps, and flashings. Space fasteners 12 inch maximum on center. Where end lap fasteners are required to improve closure, locate the end lap fasteners not more than 2 inch from the end of the overlapping sheet.

3.1.9 Protection from Contact with Dissimilar Materials

3.1.9.1 Copper or Copper-bearing Alloys

Paint with heavy-bodied bituminous paint surfaces in contact with dissimilar metal, or separate the surfaces by means of moistureproof building felts.

3.1.9.2 Aluminum

Do not allow aluminum surfaces in direct contact with other metals except stainless steel, zinc, or zinc coating. Where aluminum contacts another metal, paint the dissimilar metal with a primer followed by two coats of aluminum paint. Where drainage from a dissimilar metal passes over aluminum, paint the dissimilar metal with a non-lead pigmented paint.

3.1.9.3 Metal Surfaces

Paint surfaces in contact with mortar, concrete, or other masonry materials with alkali-resistant coatings such as heavy-bodied bituminous paint.

3.1.9.4 Wood or Other Absorptive Materials

Paint surfaces that may become repeatedly wet and in contact with metal with two coats of aluminum paint or a coat of heavy-bodied bituminous paint.

3.1.10 Expansion and Contraction

Provide expansion and contraction joints at not more than 32 foot intervals for aluminum and at not more than 40 foot intervals for other metals. Provide an additional joint where the distance between the last expansion joint and the end of the continuous run is more than half the required interval. Space joints evenly. Join extruded aluminum gravel stops and fascias by expansion and contraction joints spaced not more than 12 feet apart.

3.1.11 Base Flashing

Extend up vertical surfaces of the flashing not less than 8 inch and not less than 4 inch under the roof covering. Where finish wall coverings form a counterflashing, extend the vertical leg of the flashing up behind the applied wall covering not less than 6 inch. Overlap the flashing strips with the previously laid flashing not less than 3 inch. Fasten the strips at their upper edge to the deck. Horizontal flashing at vertical surfaces must extend vertically above the roof surface and fastened at their upper edge to the deck a minimum of 6 inch on center with hex headed, galvanized shielded screws a minimum of 2-inch lap of any surface. Solder end laps and provide for expansion and contraction. Extend the metal flashing over crickets at the up-slope side of curbs, and similar vertical surfaces extending through sloping roofs, the metal flashings. Extend the metal flashings onto the roof covering not less than 4.5 inch at the lower side of vertical surfaces extending through the roof decks. Install and fit the flashings so as to be completely weathertight. Provide factory-fabricated base flashing for interior and exterior corners. Do not use metal base flashing on built-up roofing.

3.1.12 Counterflashing

Except where indicated or specified otherwise, insert counterflashing in reglets located from 9 to 10 inch above roof decks, extend down vertical surfaces over upturned vertical leg of base flashings not less than 3 inch. Fold the exposed edges of counterflashings 1/2 inch. Where stepped counterflashings are required, they may be installed in short lengths or may be of the preformed one-piece type. Provide end laps in counterflashings not less than 3 inch and make it weathertight with plastic cement. Do not make lengths of metal counterflashings exceed 10 feet. Form the flashings to the required shapes before installation. Factory-form the corners not less than 12 inch from the angle. Secure the flashings in the reglets with lead wedges and space not more than 18 inch apart; on short runs, place wedges closer together. Fill caulked-type reglets or raked joints which receive counterflashing with caulking compound. Turn up the concealed edge of counterflashings built into masonry or concrete walls not less than 1/4 inch and extend not less than 2 inch into the walls. Install counterflashing to provide a spring action against base flashing.

3.1.13 Metal Reglets

Provide factory fabricated caulked type or friction type reglets with a minimum opening of 1/4 inch and a depth of 1 1/4 inch, as approved.

3.1.13.1 Caulked Reglets

Provide with rounded edges and metal strap brackets or other anchors for securing to the concrete forms. Provide reglets with a core to protect them from injury during the installation. Provide built-up mitered corner pieces for internal and external angles. Wedge the flashing in the reglets with lead wedges every 18 inch, caulked full and solid with an approved compound.

3.1.13.2 Friction Reglets

Provide with flashing receiving slots not less than 5/8 inch deep, one inch jointing tongues, and upper and lower anchoring flanges installed at 24 inch maximum snaplock receiver. Insert the flashing the full depth of the slot and lock by indentations made with a dull-pointed tool, wedges, and filled with a sealant. For friction reglets, install flashing snaplock receivers at 24 inch on center maximum. When the flashing has been inserted the full depth, caulk the slot and lock with wedges and fill with sealant.

3.1.14 Polyvinyl Chloride Reglets

Rigid polyvinyl chloride reglets ASTM D1784, Type II, Grade 1, Class 14333-D, 0.075 inch minimum thickness may be provided in lieu of metal reglets for temporary construction.

3.1.15 Gravel Stops and Fascias

Prefabricate in the shapes and sizes indicated and in lengths not less that 8 feet. Extend flange at least 4 inch onto roofing. Provide prefabricated, mitered corners internal and external corners. Install gravel stops and fascias after all plies of the roofing membrane have been applied, but before the flood coat of bitumen is applied. Prime roof flange of gravel stops and fascias on both sides with an asphalt primer. After primer has dried, set flange on roofing membrane and strip-in.Nail flange securely to wood nailer with large-head, barbed-shank roofing nails 1.5 inch long spaced not more than 3 inch on center, in two staggered rows.

3.1.15.1 Edge Strip

Hook the lower edge of fascias at least 3/4 inch over a continuous strip of the same material bent outward at an angle not more than 45 degrees to form a drip. Nail hook strip to a wood nailer at 6 inchmaximum on center. Where fastening is made to concrete or masonry, use screws spaced 12 inch on center driven in expansion shields set in the concrete or masonry. Where horizontal wood nailers are slotted to provide for insulation venting, install strips to prevent obstruction of vent slots. Where necessary, install strips over 1/16 inch thick compatible spacer or washers.

3.1.15.2 Joints

Leave open the section ends of gravel stops and fascias 1/4 inch and backed with a formed flashing plate, mechanically fastened in place and lapping each section end a minimum of 4 inch set laps in plastic cement. Face nailing will not be permitted. Install prefabricated aluminum gravel stops and fascias in accordance with the manufacturer's printed instructions and details.

3.1.16 Metal Drip Edge

Provide a metal drip edge, designed to allow water run-off to drip free of underlying construction, at eaves and rakes prior to the application of roofing shingles. Apply directly on the wood deck at the eaves and over the underlay along the rakes. Extend back from the edge of the deck not more than 3 inch and secure with compatible nails spaced not more than 10 inch on center along upper edge.

3.1.17 Gutters

The hung type of shape indicated and supported on underside by brackets that permit free thermal movement of the gutter. Provide gutters in sizes indicated complete with mitered corners, end caps, outlets, brackets, and other accessories necessary for installation. Bead with hemmed edge or reinforce the outer edge of gutter with a stiffening bar not less than 3/4 by 3/16 inch of material compatible with gutter. Fabricate gutters in sections not less than 8 feet. Lap the sections a minimum of one inch in the direction of flow or provide with concealed splice plate 6 inch minimum. Join the gutters, other than aluminum, by riveted and soldered joints. Join aluminum gutters with riveted sealed joints. Provide expansion-type slip joints midway between outlets. Install gutters below slope line of the roof so that snow and ice can slide clear. Support gutters on as indicated . Adjust gutters to slope uniformly to outlets, with high points occurring midway between outlets. Fabricate hangers and fastenings from metals.

3.1.18 Downspouts

Space supports for downspouts according to the manufacturer's recommendation for the or steel substrate. Types, shapes and sizes are indicated. Provide complete including elbows and offsets. Provide downspouts in approximately 10 foot lengths. Provide end joints to telescope not less than 1/2 inch and lock longitudinal joints. Provide gutter outlets with wire ball strainers for each outlet. Provide strainers to fit tightly into outlets and be of the same material used for gutters. Keep downspouts not less than one inch away from walls. Fasten to the walls at top, bottom, and at an intermediate point not to exceed 5 feet on center with leader straps or concealed rack-and-pin type fasteners. Form straps and fasteners of metal compatible with the downspouts.

3.1.18.1 Terminations

See archtiectrual drawings for termination of downpouts into cast-iron boots.

3.1.19 Open Valley Flashing

Provide valley flashing free of longitudinal seams, of width sufficient to extend not less than 6 inch under the roof covering on each side. Provide a 1/2 inch fold on each side of the valley flashing. Lap the sheets not less than 6 inch in the direction of flow and secure to roofing construction with cleats attached to the fold on each side. Nail the tops of sheets to roof sheathing. Space the cleats not more than 12 inch on center. Provide exposed flashing not less than 4 inch in width at the top and increase one inch in width for each additional 8 feet in length. Where the slope of the valley is 4.5 inch or less per foot, or the intersecting roofs are on different slopes, provide an inverted V-joint, one inch high, along the centerline of the valley; and extend the edge of the valley sheets

8 inch under the roof covering on each side.

3.1.20 Eave Flashing

One piece in width, applied in 8 to 10 foot lengths with expansion joints spaced as specified in paragraph entitled "Expansion and Contraction." Provide a 3/4 inch continuous fold in the upper edge of the sheet to engage cleats spaced not more than 10 inch on center. Locate the upper edge of flashing not less than 18 inch from the outside face of the building, measured along the roof slope. Fold lower edge of the flashing over and loose-lock into a continuous edge strip on the fascia. Where eave flashing intersects metal valley flashing, secure with one inch flat locked joints with cleats that are 10 inch on center.

3.1.21 Sheet Metal Covering on Flat, Sloped, or Curved Surfaces

Except as specified or indicated otherwise, cover and flash all minor flat, sloped, or curved surfaces such as crickets, bulkheads, dormers and small decks with metal sheets of the material used for flashing; maximum size of sheets, 16 by 18 inch. Fasten sheets to sheathing with metal cleats. Lock seams and solder. Lock aluminum seams as recommended by aluminum manufacturer. Provide an underlayment of roofing felt for all sheet metal covering.

3.1.22 Expansion Joints

Provide expansion joints for roofs, walls, and floors as indicated. Provide . Conform to the requirements of Table I.

3.1.22.1 Roof Expansion Joints

Consist of curb with wood nailing members on each side of joint, bituminous base flashing, metal counterflashing, and metal joint cover. Bituminous base flashing is specified in Roofing Section. Provide counterflashing as specified in paragraph "Counterflashing," except as follows: Provide counterflashing with vertical leg of suitable depth to enable forming into a horizontal continuous cleat. Secure the inner edge to the nailing member. Make the outer edge projection not less than one inch for flashing on one side of the expansion joint and be less than the width of the expansion joint plus one inch for flashing on the other side of the joint. Hook the expansion joint cover over the projecting outer edges of counterflashing. Provide roof joint with a joint cover of the width indicated. Hook and lock one edge of the joint cover over the shorter projecting flange of the continuous cleat, and the other edge hooked over and loose locked with the longer projecting flange. Joints are specified in Table II.

3.1.22.2 Floor and Wall Expansion Joints

Provide U-shape with extended flanges for expansion joints in concrete and masonry walls and in floor slabs.

3.1.23 Flashing at Roof Penetrations and Equipment Supports

Provide metal flashing for all pipes, ducts, and conduits projecting through the roof surface and for equipment supports, guy wire anchors, and similar items supported by or attached to the roof deck. Goose-necks, rainhoods, power roof ventilators are specified in the mechanical specification sections.

3.1.24 Single Pipe Vents

See Table I, footnote (d). Set flange of sleeve in bituminous plastic cement and nail 3 inch on center. Bend the top of sleeve over and extend down into the vent pipe a minimum of 2 inch. For long runs or long rises above the deck, where it is impractical to cover the vent pipe with lead, use a two-piece formed metal housing. Set metal housing with a metal sleeve having a 4 inch roof flange in bituminous plastic cement and nailed 3 inch on center. Extend sleeve a minimum of8 inch above the roof deck and lapped a minimum of 3 inch by a metal hood secured to the vent pipe by a draw band. Seal the area of hood in contact with vent pipe with an approved sealant.

3.1.25 Stepped Flashing

Stepped flashing shall be installed where sloping roofs surfaced with shingles abut vertical surfaces. Separate pieces of base flashing shall be placed in alternate shingle courses.

3.1.26 Copings

Provide coping using copper sheets 8 or 10 feet long joined by a 3/4 inch locked and soldered seam. Terminate outer edges in edge strips. Install with sealed lap joints cover plate joints standing seam joints as indicated.

3.2 PAINTING

Field-paint sheet metal for separation of dissimilar materials.

3.3 CLEANING

Clean exposed sheet metal work at completion of installation. Remove grease and oil films, handling marks, contamination from steel wool, fittings and drilling debris, and scrub-clean. Free the exposed metal surfaces of dents, creases, waves, scratch marks, and solder or weld marks.

3.4 REPAIRS TO FINISH

Scratches, abrasions, and minor surface defects of finish may be repaired in accordance with the manufacturer's printed instructions and as approved. Repair damaged surfaces caused by scratches, blemishes, and variations of color and surface texture. Replace items which cannot be repaired.

3.5 FIELD QUALITY CONTROL

Establish and maintain a Quality Control Plan for sheet metal used in conjunction with roofing to assure compliance of the installed sheet metalwork with the contract requirements. Remove work that is not in compliance with the contract and replace or correct. Include quality control, but not be limited to, the following:

a. Observation of environmental conditions; number and skill level of sheet metal workers; condition of substrate.

b. Verification that specified material is provided and installed.

c. Inspection of sheet metalwork, for proper size(s) and thickness(es), fastening and joining, and proper installation.

-- End of Section --

THIS PAGE HAS BEEN INTENTIONALLY LEFT BLANK

SECTION 07 61 14.00 20

STEEL STANDING SEAM ROOFING
05/11

PART 1 GENERAL

1.1 REFERENCES

The publications listed below form a part of this specification to the extent referenced. The publications are referred to within the text by the basic designation only.

AMERICAN IRON AND STEEL INSTITUTE (AISI)

AISI SG03-3	(2002; Suppl 2001-2004; R 2008) Cold-Formed Steel Design Manual Set

ASTM INTERNATIONAL (ASTM)

ASTM A1008/A1008M	(2015) Standard Specification for Steel, Sheet, Cold-Rolled, Carbon, Structural, High-Strength Low-Alloy and High-Strength Low-Alloy with Improved Formability, Solution Hardened, and Bake Hardened
ASTM A1011/A1011M	(2014) Standard Specification for Steel, Sheet, and Strip, Hot-Rolled, Carbon, Structural, High-Strength Low-Alloy and High-Strength Low-Alloy with Improved Formability and Ultra-High Strength
ASTM A36/A36M	(2014) Standard Specification for Carbon Structural Steel
ASTM A653/A653M	(2015) Standard Specification for Steel Sheet, Zinc-Coated (Galvanized) or Zinc-Iron Alloy-Coated (Galvannealed) by the Hot-Dip Process
ASTM A792/A792M	(2010) Standard Specification for Steel Sheet, 55% Aluminum-Zinc Alloy-Coated by the Hot-Dip Process
ASTM D2247	(2015) Testing Water Resistance of Coatings in 100% Relative Humidity
ASTM D4214	(2007; R 2015) Standard Test Method for Evaluating the Degree of Chalking of Exterior Paint Films
ASTM D522/D522M	(2014) Mandrel Bend Test of Attached Organic Coatings
ASTM D523	(2014) Standard Test Method for Specular Gloss
ASTM E1592	(2005; R 2012) Structural Performance of

	Sheet Metal Roof and Siding Systems by Uniform Static Air Pressure Difference
ASTM G152	(2013) Operating Open Flame Carbon Arc Light Apparatus for Exposure of Nonmetallic Materials
ASTM G153	(2013) Operating Enclosed Carbon Arc Light Apparatus for Exposure of Nonmetallic Materials

SHEET METAL AND AIR CONDITIONING CONTRACTORS' NATIONAL ASSOCIATION (SMACNA)

SMACNA 1793	(2012) Architectural Sheet Metal Manual, 7th Edition

1.1.1 GENERAL DESCRIPTION OF ROOFING SYSTEM

The roofing system described in this specification section is to be installed above the pre-engineered metal building; the metal roofing panels shall span between the indivdual purlins of the pre-engineered metal building. Roof panels will coordinate with projects Q-1218 and Q-1396 roof panels.

1.2 DEFINITIONS

1.2.1 Field-Formed Seam

Seams of panels so configured that when adjacent sheets are installed the seam is sealed utilizing mechanical or hand seamers. Crimped (45 degree bend), roll formed (180 degree bend), double roll formed (2 - 180 degree bends), and roll and lock systems are types of field-formed seam systems.

1.2.2 Pre-Formed

Formed to the final, less field-formed seam, profile and configuration in the factory.

1.2.3 Field-Formed

Formed to the final, less field-formed seam, profile and configuration at the site of work prior to installation.

1.2.4 Roofing System

The roofing system is defined as the assembly of roofing components, including roofing panels, flashing, fasteners, and accessories which, when assembled properly result in a watertight installation.

1.3 SYSTEM DESCRIPTION

1.3.1 Design Requirements

a. Panels shall be continuous lengths up to manufacturer's standard longest lengths, with no joints or seams, except where indicated or specified. Ribs of adjoining sheets shall be in continuous contact from eave to ridge. Individual panels of snap together type systems shall be removable for replacement of damaged material.

b. There shall be no exposed or penetrating fasteners except where shown on approved shop drawings. Fasteners into steel shall be stainless steel, zinc cast head, or cadmium plated steel screws inserted into predrilled holes. There shall be a minimum of two fasteners per clip. Single fasteners will be allowed when supporting structural members are prepunched or predrilled.

c. Snap together type systems shall have a capillary break and a positive side lap locking device. Field-formed seam type systems shall be mechanically locked closed by the manufacturer's locking tool. The seam shall include a continuous factory applied sealant when required by the manufacturer to withstand the wind loads specified.

d. Roof panel anchor clips shall be concealed and designed to allow for longitudinal thermal movement of the panels, except where specific fixed points are indicated. Provide for lateral thermal movement in panel configuration or with clips designed for lateral and longitudinal movement.

1.3.2 Design Conditions

The system shall be designed to resist positive and negative loads specified herein in accordance with the AISI SG03-3. Panels shall support walking loads without permanent distortion or telegraphing of the structural supports.

1.3.2.1 Wind Uplift

The design uplift pressures for the roof system shall be computed and applied as directed by the structural drawings.

1.3.2.2 Roof Live Loads

Loads shall be applied on the horizontal projection of the roof structure. The minimum roof design live load shall be as directed by structural drawings.

1.3.2.3 Thermal Movement

System shall be capable of withstanding thermal movement based on a temperature range of 10 degrees F below and 140 degrees F..

1.3.2.4 Deflection

Panels shall be capable of supporting design loads between unsupported spans with deflection of not greater than L/240 of the span.

1.3.3 Structural Performance

The structural performance test methods and requirements of the Standing Seam Roofing Systems (SSRS) shall be in accordance with ASTM E1592.

1.4 SUBMITTALS

Government approval is required for submittals with a "G" designation; submittals not having a "G" designation are for Contractor Quality Control approval. Submittals with an "S" are for inclusion in the Sustainability Notebook, in conformance to Section 01 33 29SUSTAINABILITY REQUIREMENTS.

Submit the following in accordance with Section 01 33 00 SUBMITTAL PROCEDURES:

SD-02 Shop Drawings

Roofing; G

Submit roofing drawings to supplement the instructions and diagrams. Drawings shall include design and erection drawings containing an isometric view of the roof showing the design uplift pressures and dimensions of edge, ridge and corner zones; and show typical and special conditions including flashings, materials and thickness, dimensions, fixing lines, anchoring methods, sealant locations, sealant tape locations, fastener layout, sizes, and spacing, terminations, penetrations, attachments, and provisions for thermal movement. Details of installation shall be in accordance with the manufacturer's Standard Instructions and details or the SMACNA 1793. Prior to submitting shop drawings, have drawings reviewed and approved by the manufacturer's technical engineering department.

SD-03 Product Data

Roofing panels; G

Attachment clips

Closures

Accessories

Fasteners

Sealants

Sample warranty certificate; G

Submit for materials to be provided. Submit data sufficient to indicate conformance to specified requirements.

SD-04 Samples

Roofing panel

Submit a 12 inch long by full width section of typical panel.

For color selection, submit 2 by 4 inch metal samples in color, finish and texture specified.

Accessories

Submit each type of accessory item used in the project including, but not limited to each type of anchor clip, closure, fastener, and leg clamp.

Sealants

Intermediate Support Section

Submit full size samples of each intermediate support section, 12 inches long.

SD-05 Design Data

Design calculations

SD-06 Test Reports

Field Inspection; G

Submit manufacturer's technical representative's field inspection reports as specified in paragraph entitled "Manufacturer's Field Inspection."

Structural performance tests

Factory Finish and Color Performance Requirements

SD-07 Certificates

Manufacturer's Technical Representative's Qualifications

Statement of Installer's Qualifications

Submit documentation from roofing manufacturer proving the manufacturer's technical representative meets below specified requirements. Include name, address, telephone number, and experience record.

Submit documentation proving the installer is factory-trained, has the specified experience, and authorized by the manufacturer to install the products specified.

Coil stock compatibility

Provide certification of coil compatibility with roll forming machinery to be used for forming panels without warping, waviness, and rippling not part of panel profile; to be done without damage, abrasion or marking of finish coating.

SD-08 Manufacturer's Instructions

Installation manual

Submit manufacturers printed installation manual, instructions, and standard details.

SD-11 Closeout Submittals

Information card

For each roofing installation, submit a typewritten card or photoengraved aluminum card containing the information listed on Form 1 located at the end of this section.

1.5 DESIGN CALCULATIONS

Provide design calculations prepared by a professional engineer

specializing in structural engineering verifying that system supplied and any additional framing meets design load criteria indicated. Coordinate calculations with manufacturer's test results. Include calculations for:

Wind load uplift design pressure at roof locations specified in paragraph entitled "Wind Uplift."

Clip spacing and allowable load per clip.

Fastening of clips to structure or intermediate supports.

Intermediate support spacing and framing and fastening to structure when required.

Allowable panel span at anchorage spacing indicated.

Safety factor used in design loading.

Governing code requirements or criteria.

Edge and termination details.

1.6 QUALITY ASSURANCE

1.6.1 Preroofing Conference

After submittals are received and approved but before roofing and insulation work, including associated work, is preformed, the Contractor shall hold a preroofing conference to review the following:

a. The drawings and specifications

b. Procedure for on site inspection and acceptance of the roofing substrate and pertinent structural details relating to the roofing system

c. Contractor's plan for coordination of the work of the various trades involved in providing the roofing system and other components secured to the roofing

d. Safety requirements

The preroofing conference shall be attended by the Contractor, OICC, and personnel directly responsible for the roofing and insulation installation, mechanical and electrical work, and the roofing manufacturer's technical representative. Conflicts among those attending the preroofing conference shall be resolved and confirmed in writing before roofing work, including associated work, is begun. Prepare written minutes of the preroofing conference and submit to the Contracting Officer.

1.6.2 Manufacturer

The SSMRS shall be the product of a metal roofing industry - recognized manufacturer who has been in the practice of manufacturing SSMRS for a period of not less than 5 years and who has been involved in at least 5 projects similar in size and complexity to this project.

1.6.3 Manufacturer's Technical Representative

The representative shall have authorization from manufacturer to approve field changes and be thoroughly familiar with the products and with installations in the geographical area where construction will take place. The manufacturer's representative shall be an employee of the manufacturer with at least 5 years experience in installing the roof system. The representative shall be available to perform field inspections and attend meetings as required herein, and as requested by the Contracting Officer.

1.6.4 Installer's Qualifications

The roofing system installer shall be factory-trained, approved by the metal roofing system manufacturer to install the system, and shall have a minimum of three years experience as an approved applicator with that manufacturer. The applicator shall have applied five installations of similar size and scope as this project within the previous 3 years.

1.6.5 Single Source

Roofing panels, clips, closures, and other accessories shall be standard products of the same manufacturer; shall be the latest design by the manufacturer; and shall have been designed by the manufacturer to operate as a complete system for the intended use.

1.6.6 Laboratory Tests For Panel Finish

The term "appearance of base metal" refers to the metal coating on steel. Panels shall meet the following test requirements:

a. Formability Test: When subjected to a 180 degree bend over a 1/8 inch diameter mandrel in accordance with ASTM D522/D522M, exterior coating film shall show only slight microchecking and no loss of adhesion.

b. Accelerated Weathering Test: Withstand a weathering test for a minimum of 2000 hours in accordance with ASTM G152 and ASTM G153, Method 1 without cracking, peeling, blistering, loss of adhesion of the protective coating, or corrosion of the base metal. Protective coating that can be readily removed from the base metal with a penknife blade or similar instrument shall be considered to indicate loss of adhesion.

c. Chalking Resistance: After the 2000-hour weatherometer test, exterior coating shall not chalk greater than No. 8 rating when measured in accordance with ASTM D4214 test procedures.

d. Color Change Test:

As required by Section 13 34 19 METAL BUILDING SYSTEMS.

e. Salt Spray Test: As required by Section 13 34 19 METAL BUILDING SYSTEMS

f. Abrasion Resistance Test for Color Coating: coating system shall match Abrasion Resistance of the panels described in section 13 34 19 METAL BUILDING SYSTEMS.

g. Humidity Test: When subjected to a humidity cabinet test in accordance with ASTM D2247 for 1000 hours, a scored panel shall show no signs of blistering, cracking, creepage, or corrosion.

h. Gloss Test: The gloss of the finish shall be 30 plus or minus 5 at an angle of 60 degrees, when measured in accordance with ASTM D523.

i. Glare Resistance Test:

Surfaces of panels that will be exposed to the exterior shall have a specular reflectance of not more than 10 when measured in accordance with ASTM D523 at an angle of 85 degrees. Specular reflectance may be obtained with striations or embossing. Requirements specified under "Formability Test" will be waived if necessary to conform to this requirement.

1.7 WARRANTY

Furnish manufacturer's no-dollar-limit materials and workmanship warranty for the roofing system. The warranty period shall be not less than 20 years from the date of Government acceptance of the work. The warranty shall be issued directly to the Government. The warranty shall provide that if within the warranty period the metal roofing system becomes non-watertight or shows evidence of corrosion, perforation, rupture or excess weathering due to deterioration of the roofing system resulting from defective materials or installed workmanship the repair or replacement of the defective materials and correction of the defective workmanship shall be the responsibility of the roofing system manufacturer. Repairs that become necessary because of defective materials and workmanship while roofing is under warranty shall be performed within 7 days after notification, unless additional time is approved by the Contracting Officer. Failure to perform repairs within the specified period of time will constitute grounds for having the repairs performed by others and the cost billed to the manufacturer. The Contractor shall also provide a 2 year contractor installation warranty.

1.8 DELIVERY, STORAGE AND HANDLING

Deliver, store, and handle preformed panels, bulk roofing products and other manufactured items in a manner to prevent damage or deformation.

1.8.1 Delivery

Provide adequate packaging to protect materials during shipment. Crated materials shall not be uncrated until ready for use, except for inspection. Immediately upon arrival of materials at the jobsite, inspect materials for damage, dampness, and staining. Damaged or permanently stained materials that cannot be restored to like-new condition shall be replaced with satisfactory material. If materials are wet, remove the moisture and re-stack and protect the panels until used.

1.8.2 Storage

Stack materials on platforms or pallets and cover with tarpaulins or other suitable weathertight covering which prevents water trapping or condensation. Store materials so that water which might have accumulated during transit or storage will drain off. Do not store the panels in contact with materials that might cause staining, such as mud, lime, cement, fresh concrete or chemicals. Protect stored panels from wind damage.

1.8.3 Handling

Handle material carefully to avoid damage to surfaces, edges and ends.

PART 2 PRODUCTS

2.1 ROOFING PANELS

Panels shall have interlocking ribs for securing adjacent sheets. System for securing the roof covering to structural framing members shall be concealed clip fastening system with no fasteners penetrating the panels except at the ridge or eave, rakes, penetrations, and end laps. Backing plates and ends of panels at end laps shall be predrilled or prepunched; factory prepare ends of panels to be lapped by trimming part of seam, die-setting or swaging ends of panels. Length of sheets shall be sufficient to cover the entire length of any unbroken roof slope. Make provisions for expansion and contraction at either ridge or eave, consistent with the type of system to be used. Panels from coil stock shall be formed without warping, waviness or ripples not part of the panel profile and shall be free of damage to the finish coating system.

2.1.1 Material

Zinc-coated steel conforming to ASTM A653/A653M, G90 coating designation or aluminum-zinc alloy coated steel conforming to ASTM A792/A792M, AZ 55 coating. Minimum thickness: Refer to roof panel information at specification Section 13 34 19 METAL BUILDING SYSTEMS.

2.1.2 Texture

Smooth with raised intermediate ribs for added stiffness.

2.1.3 Finish

Factory color finish.

2.1.3.1 Factory Color Finish

See FACTORY FINISH AND COLOR PERFORMANCE REQUIREMENTS in specification section 13 34 19 METAL BUILDING SYSTEMS.

2.2 INTERMEDIATE SUPPORTS

Fabricate panel subgirts, subpurlins, T-bars, Z-bars and tracks from galvanized steel conforming to ASTM A653/A653M, G90, Grade D (16 gage and heavier), Grade A (18 gage and lighter); or steel conforming to ASTM A36/A36M, ASTM A1011/A1011M , or ASTM A1008/A1008M prime painted with zinc-rich primer. Size, shape, thickness and capacity as required to meet the load and deflection criteria specified.

2.3 ATTACHMENT CLIPS

Fabricate clips from ASTM A1011/A1011M, or ASTM A1008/A1008M steel hot-dip galvanized in accordance with ASTM A653/A653M, G 90, or Series 300 stainless steel. Size, shape, thickness and capacity as required to meet the load, insulation thickness and deflection criteria specified.

2.4 ACCESSORIES

Sheet metal flashings, trim, moldings, closure strips, pre-formed crickets, caps, equipment curbs, and other similar sheet metal accessories used in conjunction with preformed metal panels shall be of the same material as used for the panels. Provide metal accessories with a factory color finish to match the roofing panels, except that such items which will be concealed after installation may be provided without the finish if they are stainless steel. Metal shall be of a thickness not less than that used for the panels. Thermal spacer blocks and other thermal barriers at concealed clip fasteners shall be as recommended by the manufacturer except that wood spacer blocks are not allowed.

2.4.1 Closures

2.4.1.1 Rib Closures

Corrosion resisting steel, closed-cell or solid-cell synthetic rubber, neoprene or polyvinyl chloride pre-molded to match configuration of rib opening. Material for closures shall not absorb water.

2.4.1.2 Ridge Closures

Metal-clad foam or metal closure with foam secondary closure matching panel configuration for installation on surface of roof panel between panel ribs at ridge and headwall roof panel flashing conditions and terminations. Foam material shall not absorb water.

2.4.2 Fasteners

Zinc-coated steel, corrosion resisting steel, zinc cast head, or nylon capped steel, type and size specified below or as otherwise approved for the applicable requirements. Design the fastening system to withstand the design loads specified. Exposed fasteners shall be gasketed or have gasketed washers on the exterior side of the covering to waterproof the penetration. Washer material shall be compatible with the covering; have a minimum diameter of 3/8 inch for structural connections; and gasketed portion of fasteners or washers shall be neoprene or other equally durable elastomeric material approximately 1/8 inch thick.

2.4.2.1 Screws

Not smaller than No. 14 diameter if self-tapping type and not smaller than No. 12 diameter if self-drilling and self-tapping.

2.4.2.2 Bolts

Not smaller than 1/4 inch diameter, shouldered or plain shank as required, with proper nuts.

2.4.2.3 Automatic End-Welded Studs

Automatic end-welded studs shall be shouldered type with a shank diameter of not smaller than 3/16 inch and cap or nut for holding covering against the shoulder.

2.4.2.4 Explosive Driven Fasteners

Fasteners for use with explosive actuated tools shall have a shank diameter

of not smaller than 0.145 inch with a shank length of not smaller than 1/2 inch for fastening to steel and not smaller than one inch for fastening to concrete.

2.4.2.5 Rivets

Blind rivets shall be stainless steel with 1/8 inch nominal diameter shank. Rivets shall be threaded stem type if used for other than the fastening of trim. Rivets with hollow stems shall have closed ends.

2.4.3 Sealants

Elastomeric type containing no oil or asphalt. Exposed sealant shall cure to a rubberlike consistency. Concealed sealant shall be the non-hardening type. Seam sealant shall be factory-applied, non-skinning, non-drying, and shall conform to the roofing manufacturer's recommendations. Silicone-based sealants shall not be used in contact with finished metal panels and components unless approved otherwise by the Contracting Officer.

2.4.4 GASKETS AND INSULATING COMPOUNDS

Nonabsorptive and suitable for insulating contact points of incompatible materials. Insulating compounds shall be nonrunning after drying.

2.5 THERMAL INSULATION

For information about the roof insulation system of the pre-engineered building see Section 13 34 19.

PART 3 EXECUTION

3.1 EXAMINATION

Examine surfaces to receive standing seam metal roofing and flashing. Ensure that surfaces are plumb and true, clean, even, smooth, as dry and free from defects and projections which might affect the installation.

3.2 PROTECTION FROM CONTACT WITH DISSIMILAR MATERIALS

3.2.1 Cementitious Materials

Paint metal surfaces which will be in contact with mortar, concrete, or other masonry materials with one coat of alkali-resistant coating such as heavy-bodied bituminous paint.

3.2.2 Contact with Wood

Where metal will be in contact with wood or other absorbent material subject to wetting, seal joints with sealing compound and apply one coat of heavy-bodied bituminous paint.

3.3 INSTALLATION

Install in accordance with the approved manufacturer's erection instructions, shop drawings, and diagrams. Panels shall be in full and firm contact with attachment clips. Where prefinished panels are cut in the field, or where any of the factory applied coverings or coatings are abraded or damaged in handling or installation, they shall, after necessary repairs have been made with material of the same color as the weather

coating, be approved before being installed. Seal completely openings through panels. Correct defects or errors in the materials. Replace materials which cannot be corrected in an approved manner with nondefective materials. Provide molded closure strips where indicated and where necessary to provide weathertight construction. Use shims as required to ensure attachment clip line is true. Use a spacing gage at each row of panels to ensure that panel width is not stretched or shortened.

3.3.1 Roof Panels

Apply roofing panels with the standing seams parallel to the slope of the roof. Provide roofing panels in longest practical lengths from ridge to eaves (top to eaves on shed roofs), with no transverse joints except at the junction of ventilators, curbs, skylights, chimneys, and similar openings. Install flashing to assure positive water drainage away from roof penetrations. Locate panel end laps such that fasteners do not engage supports or otherwise restrain the longitudinal thermal movement of panels. Form field-formed seam type system seams in the field with an automatic mechanical seamer approved by the manufacturer. Attach panels to the structure with concealed clips incorporated into panel seams. Clip attachment shall allow roof to move independently of the structure, except at fixed points as indicated.

3.3.2 Roof System Insulation Installation

See Section 13 34 19 for Roof System Insulation information.

3.3.2.1 Rigid or Semi-Rigid Insulation

Not used.

3.3.3 Flashings

Provide flashing, related closures and accessories as indicated and as necessary to provide a weathertight installation. Install flashing to ensure positive water drainage away from roof penetrations. Flash and seal the roof at the ridge, eaves and rakes, and projections through the roof. Place closure strips, flashing, and sealing material in an approved manner that will assure complete weathertightness. Details of installation which are not indicated shall be in accordance with the SMACNA 1793, panel manufacturer's approved printed instructions and details, or the approved shop drawings. Allow for expansion and contraction of flashing.

3.3.4 Flashing Fasteners

Fastener spacings shall be in accordance with the panel manufacturer's recommendations and as necessary to withstand the design loads indicated. Install fasteners in roof valleys as recommended by the manufacturer of the panels. Install fasteners in straight lines within a tolerance of 1/2 inch in the length of a bay. Drive exposed penetrating type fasteners normal to the surface and to a uniform depth to seat gasketed washers properly and drive so as not to damage factory applied coating. Exercise extreme care in drilling pilot holes for fastenings to keep drills perpendicular and centered. Do not drill through sealant tape. After drilling, remove metal filings and burrs from holes prior to installing fasteners and washers. Torque used in applying fasteners shall not exceed that recommended by the manufacturer. Remove panels deformed or otherwise damaged by over-torqued fastenings, and provide new panels.

3.3.5 Rib and Ridge Closure/Closure Strips

Set closure/closure strips in joint sealant material and apply sealant to mating surfaces prior to adding panel.

3.4 PROTECTION OF APPLIED ROOFING

Do not permit storing, walking, wheeling, and trucking directly on applied roofing materials. Provide temporary walkways, runways, and platforms of smooth clean boards or planks as necessary to avoid damage to applied roofing materials, and to distribute weight to conform to indicated live load limits of roof construction.

3.5 CLEANING

Clean exposed sheet metal work at completion of installation. Remove metal shavings, filings, nails, bolts, and wires from roofs. Remove grease and oil films, excess sealants, handling marks, contamination from steel wool, fittings and drilling debris and scrub the work clean. Exposed metal surfaces shall be free of dents, creases, waves, scratch marks, solder or weld marks and damage to the finish coating.

3.6 MANUFACTURER'S FIELD INSPECTION

Manufacturer's technical representative shall visit the site as necessary during the installation process to assure panels, flashings, and other components are being installed in a satisfactory manner. Manufacturer's technical representative shall perform a field inspection during the first 20 squares of roof panel installation and at substantial completion prior to issuance of warranty, as a minimum, and as otherwise requested by the Contracting Officer. Additional inspections shall not exceed one for 100 squares of total roof area with the exception that follow-up inspections of previously noted deficiencies or application errors shall be performed as requested by the Contracting Officer. Each inspection visit shall include a review of the entire installation to date. After each inspection, a report, signed by the manufacturer's technical representative, shall be submitted to the Contracting Officer noting the overall quality of work, deficiencies and any other concerns, and recommended corrective actions in detail. Notify Contracting Officer a minimum of 2 working days prior to site visit by manufacturer's technical representative.

3.7 COMPLETED WORK

Completed work shall be plumb and true without oil canning, dents, ripples, abrasion, rust, staining, or other damage detrimental to the performance or aesthetics of the completed roof assembly.

3.8 INFORMATION CARD

For each roof, provide a typewritten card, laminated in plastic and framed for interior display or a photoengraved 0.032 inch thick aluminum card for exterior display. Card to be 8 1/2 by 11 inches minimum and contain the information listed on Form 1 at end of this section. Install card near point of access to roof, or where indicated. Send a photostatic paper copy to LANTNAVFACENGCOM, Code 1613, 1510 Gilbert Street, Norfolk, VA 23511-2699.

3.9 FORM ONE

FORM 1 - PREFORMED STEEL STANDING SEAM ROOFING SYSTEM COMPONENTS

1. Contract Number:

2. Building Number & Location:

3. NAVFAC Specification Number:

4. Deck/Substrate Type:

5. Slopes of Deck/Roof Structure:

6. Insulation Type & Thickness:

7. Insulation Manufacturer:

8. Vapor Retarder: ( )Yes ( )No

9. Vapor Retarder Type:

10. Preformed Steel Standing Seam Roofing Description:

a. Manufacturer (Name, Address, & Phone No.):
b. Product Name: c. Width: d. Gage:
e. Base Metal: f. Method of Attachment:

11. Repair of Color Coating:

a. Coating Manufacturer (Name, Address & Phone No.):
b. Product Name:
c. Surface Preparation:
d. Recoating Formula:
e. Application Method:

12. Statement of Compliance or Exception:_____
_____
_____

13. Date Roof Completed:

14. Warranty Period: From_____ To_____

15. Roofing Contractor (Name & Address):

16. Prime Contractor (Name & Address):

Contractor's Signature _____ Date:

Inspector's Signature _____ Date:

-- End of Section --

THIS PAGE HAS BEEN INTENTIONALLY LEFT BLANK

SECTION 07 84 00

FIRESTOPPING
05/10

PART 1 GENERAL

1.1 REFERENCES

The publications listed below form a part of this specification to the extent referenced. The publications are referred to within the text by the basic designation only.

ASTM INTERNATIONAL (ASTM)

ASTM E119	(2014) Standard Test Methods for Fire Tests of Building Construction and Materials
ASTM E1399/E1399M	(1997; E 2013;R 2013) Cyclic Movement and Measuring the Minimum and Maximum Joint Widths of Architectural Joint Systems
ASTM E1966	(2015) Fire-Resistive Joint Systems
ASTM E2174	(2014b) Standard Practice for On-Site Inspection of Installed Fire Stops
ASTM E2307	(2015a) Standard Test Method for Determining Fire Resistance of Perimeter Fire Barrier Systems Using Intermediate-Scale, Multi-story Test Apparatus
ASTM E2393	(2010a) Standard Practice for On-Site Inspection of Installed Fire Resistive Joint Systems and Perimeter Fire Barriers
ASTM E814	(2013a) Standard Test Method for Fire Tests of Through-Penetration Fire Stops
ASTM E84	(2015b) Standard Test Method for Surface Burning Characteristics of Building Materials

FM GLOBAL (FM)

FM 4991	(2013) Approval of Firestop Contractors
FM APP GUIDE	(updated on-line) Approval Guide http://www.approvalguide.com/

INTERNATIONAL CODE COUNCIL (ICC)

ICC IBC	(2012) International Building Code

UNDERWRITERS LABORATORIES (UL)

UL 1479	(2015) Fire Tests of Through-Penetration Firestops
UL 2079	(2004; Reprint Dec 2014) Tests for Fire Resistance of Building Joint Systems
UL 723	(2008; Reprint Aug 2013) Test for Surface Burning Characteristics of Building Materials
UL Fire Resistance	(2014) Fire Resistance Directory

1.2 SYSTEM DESCRIPTION

1.2.1 General

Furnish and install tested and listed firestopping systems, combination of materials, or devices to form an effective barrier against the spread of flame, smoke and gases, and maintain the integrity of fire resistance rated walls, partitions, floors, and ceiling-floor assemblies, including through-penetrations and construction joints and gaps.

a. Through-penetrations include the annular space around pipes, tubes, conduit, wires, cables and vents.

b. Construction joints include those used to accommodate expansion, contraction, wind, or seismic movement; firestopping material shall not interfere with the required movement of the joint.

   Gaps requiring firestopping include gaps between the curtain wall and the floor slab and between the top of the fire-rated walls and the roof or floor deck above and at the intersection of shaft assemblies and adjoining fire resistance rated assemblies.

1.2.2 Sequencing

Coordinate the specified work with other trades. Apply firestopping materials, at penetrations of pipes and ducts, prior to insulating, unless insulation meets requirements specified for firestopping. Apply firestopping materials. at building joints and construction gaps, prior to completion of enclosing walls or assemblies. Cast-in-place firestop devices shall be located and installed in place before concrete placement. Pipe, conduit or cable bundles shall be installed through cast-in-place device after concrete placement but before area is concealed or made inaccessible. Firestop material shall be inspected and approved prior to final completion and enclosing of any assemblies that may conceal installed firestop.

1.2.3 Submittals Requirements

a. Submit detail drawings including manufacturer's descriptive data, typical details conforming to UL Fire Resistance or other details certified by another nationally recognized testing laboratory, installation instructions or UL listing details for a firestopping assembly in lieu of fire-test data or report. For those firestop applications for which no UL tested system is available through a manufacturer, a manufacturer's engineering judgment, derived from

similar UL system designs or other tests, shall be submitted for review and approval prior to installation. Submittal shall indicate the firestopping material to be provided for each type of application. When more than a total of 5 penetrations and/or construction joints are to receive firestopping, provide drawings that indicate location, "F" "T" and "L" ratings, and type of application.

b. Submit certificates attesting that firestopping material complies with the specified requirements. For all intumescent firestop materials used in through penetration systems, manufacturer shall provide certification of compliance with UL 1479.

c. Submit documentation of training and experience for Installer.

d. Submit inspection report stating that firestopping work has been inspected and found to be applied according to the manufacturer's recommendations and the specified requirements.

1.3 SUBMITTALS

Government approval is required for submittals with a "G" designation; submittals not having a "G" designation are for Contractor Quality Control approval. Submit the following in accordance with Section 01 33 00 SUBMITTAL PROCEDURES:

SD-02 Shop Drawings

Firestopping Materials; G

SD-06 Test Reports

Inspection

SD-07 Certificates

Firestopping Materials
Installer Qualifications

1.4 QUALITY ASSURANCE

1.4.1 Installer Qualifications

Engage an experienced Installer who is:

a. FM Research approved in accordance with FM 4991 or operating as a UL Certified Firestop Contractor

1.5 DELIVERY, STORAGE, AND HANDLING

Deliver materials in the original unopened packages or containers showing name of the manufacturer and the brand name. Store materials off the ground, protected from damage and exposure to elements and temperatures in accordance with manufacturer requirements. Remove damaged or deteriorated materials from the site. Use materials within their indicated shelf life.

PART 2 PRODUCTS

2.1 FIRESTOPPING MATERIALS

Provide firestopping materials, supplied from a single domestic manufacturer, consisting of commercially manufactured, asbestos-free, nontoxic products FM APP GUIDE approved, or UL listed, for use with applicable construction and penetrating items, complying with the following minimum requirements:

2.1.1 Fire Hazard Classification

Material shall have a flame spread of 25 or less, and a smoke developed rating of 50 or less, when tested in accordance with ASTM E84 or UL 723. Material shall be an approved firestopping material as listed in UL Fire Resistance or by a nationally recognized testing laboratory.

2.1.2 Toxicity

Material shall be nontoxic and carcinogen free to humans at all stages of application or during fire conditions and shall not contain hazardous chemicals or require harmful chemicals to clean material or equipment. Firestop material must be free from Ethylene Glycol, PCB, MEK, or other types of hazardous chemicals.

2.1.3 Fire Resistance Rating

Firestop systems shall be UL Fire Resistance listed or FM APP GUIDE approved with "F" rating at least equal to fire-rating of fire wall or floor in which penetrated openings are to be protected. Where required, firestop systems shall also have "T" rating at least equal to the fire-rated floor in which the openings are to be protected.

2.1.3.1 Through-Penetrations

Firestopping materials for through-penetrations, as described in paragraph SYSTEM DESCRIPTION, shall provide "F", "T" and "L" fire resistance ratings in accordance with ASTM E814 or UL 1479. Fire resistance ratings shall be as follows:

2.1.3.1.1 Penetrations of Fire Resistance Rated Walls and Partitions

F Rating = Rating of wall or partition being penetrated.

2.1.3.1.2 Penetrations of Fire Resistance Rated Floors, Floor-Ceiling Assemblies and the Ceiling Membrane of Roof-Ceiling Assemblies

Match the rating of the assembly being penetrated. Where the penetrating item is outside of a wall cavity the F rating must be equal to the fire resistance rating of the floor penetrated, and the T rating shall be in accordance with the requirements of ICC IBC.

2.1.3.1.3 Penetrations of Fire and Smoke Resistance Rated Walls, Floors, Floor-Ceiling Assemblies, and the ceiling membrane of Roof-Ceiling Assemblies

Match the rating of the assembly being penetrated.

2.1.3.2 Construction Joints and Gaps

Fire resistance ratings of construction joints, as described in paragraph SYSTEM DESCRIPTION, and gaps such as those between floor slabs and curtain walls shall be the same as the construction in which they occur. Construction joints and gaps shall be provided with firestopping materials and systems that have been tested in accordance with ASTM E119, ASTM E1966 or UL 2079 to meet the required fire resistance rating. Curtain wall joints shall be provided with firestopping materials and systems that have been tested in accordance with ASTM E2307 to meet the required fire resistance rating. Systems installed at construction joints shall meet the cycling requirements of ASTM E1399/E1399M or UL 2079. All joints at the intersection of the top of a fire resistance rated wall and the underside of a fire-rated floor, floor ceiling, or roof ceiling assembly shall provide a minimum class II movement capability.

PART 3 EXECUTION

3.1 PREPARATION

Areas to receive firestopping shall be free of dirt, grease, oil, or loose materials which may affect the fitting or fire resistance of the firestopping system. For cast-in-place firestop devices, formwork or metal deck to receive device prior to concrete placement shall be sound and capable of supporting device. Prepare surfaces as recommended by the manufacturer.

3.2 INSTALLATION

Completely fill void spaces with firestopping material regardless of geometric configuration, subject to tolerance established by the manufacturer. Firestopping systems for filling floor voids 4 inches or more in any direction shall be capable of supporting the same load as the floor is designed to support or shall be protected by a permanent barrier to prevent loading or traffic in the firestopped area. Install firestopping in accordance with manufacturer's written instructions. Provide tested and listed firestop systems in the following locations, except in floor slabs on grade:

a. Penetrations of duct, conduit, tubing, cable and pipe through floors and through fire-resistance rated walls, partitions, and ceiling-floor assemblies.

b. Penetrations of vertical shafts such as pipe chases, elevator shafts, and utility chutes.

c. Gaps at the intersection of floor slabs and curtain walls, including inside of hollow curtain walls at the floor slab.

d. Gaps at perimeter of fire-resistance rated walls and partitions, such as between the top of the walls and the bottom of roof decks.

e. Construction joints in floors and fire rated walls and partitions.

f. Other locations where required to maintain fire resistance rating of the construction.

3.2.1 Insulated Pipes and Ducts

Thermal insulation shall be cut and removed where pipes or ducts pass through firestopping, unless insulation meets requirements specified for firestopping. Replace thermal insulation with a material having equal thermal insulating and firestopping characteristics.

3.2.2 Fire Dampers

Install and firestop fire dampers in accordance with Section 23 00 00 AIR SUPPLY, DISTRIBUTION, VENTILATION, AND EXHAUST SYSTEM. Firestop installed with fire damper must be tested and approved for use in fire damper system. Firestop installed with fire damper must be tested and approved for use in fire damper system.

3.2.3 Data and Communication Cabling

Cabling for data and communication applications shall be sealed with re-enterable firestopping products and devices as indicated.

3.2.3.1 Re-Enterable Devices

Provide a minimum of one re-enterable firestopping device for the telecom room. Firestopping devices shall be pre-manufactured modular devices, containing built-in self-sealing intumescent inserts. Firestopping devices shall allow for cable moves, additions or changes without the need to remove or replace any firestop materials. Devices must be capable of maintaining the fire resistance rating of the penetrated membrane at 0 percent to 100 percent visual fill of penetrants; while maintaining "L" rating of <10 cfm/sf measured at ambient temperature and 400* F at 0 percent to 100 percent visual fill.

3.3 INSPECTION

3.3.1 General Requirements

The firestopped areas shall not be covered or enclosed until inspection is complete and approved by the Contracting Officer. Inspect the applications initially to ensure adequate preparations (clean surfaces suitable for application, etc.) and periodically during the work to assure that the completed work has been accomplished according to the manufacturer's written instructions and the specified requirements. Submit written reports indicating locations of and types of penetrations and types of firestopping used at each location; type shall be recorded by UL listed printed numbers.

3.3.2 Inspection Standards

Inspect all firestopping in accordance to ASTM E2393 and ASTM E2174 for firestop inspection, and document inspection results to be submitted.

-- End of Section --

SECTION 07 92 00

JOINT SEALANTS
01/07

PART 1 GENERAL

1.1 REFERENCES

The publications listed below form a part of this specification to the extent referenced. The publications are referred to within the text by the basic designation only.

ASTM INTERNATIONAL (ASTM)

ASTM C1311	(2010) Standard Specification for Solvent Release Agents
ASTM C509	(2006; R 2011) Elastomeric Cellular Preformed Gasket and Sealing Material
ASTM C734	(2006; R 2012) Low-Temperature Flexibility of Latex Sealants After Artificial Weathering
ASTM C919	(2012) Use of Sealants in Acoustical Applications
ASTM C920	(2014a) Standard Specification for Elastomeric Joint Sealants
ASTM D1056	(2014) Standard Specification for Flexible Cellular Materials - Sponge or Expanded Rubber
ASTM D1667	(2005; R 2011) Flexible Cellular Materials - Poly (Vinyl Chloride) Foam (Closed-Cell)
ASTM D217	(2010) Cone Penetration of Lubricating Grease
ASTM E84	(2015b) Standard Test Method for Surface Burning Characteristics of Building Materials

1.2 SUBMITTALS

Government approval is required for submittals with a "G" designation; submittals not having a "G" designation are for Contractor Quality Control approval. Submit the following in accordance with Section 01 33 00 SUBMITTAL PROCEDURES:

SD-03 Product Data

Sealants

Primers

Bond breakers

Backstops

Manufacturer's descriptive data including storage requirements, shelf life, curing time, instructions for mixing and application, and primer data (if required). Provide a copy of the Material Safety Data Sheet for each solvent, primer or sealant material.

LEED Documentation; G

SD-07 Certificates

Sealant

Certificates of compliance stating that the materials conform to the specified requirements.

1.3 ENVIRONMENTAL CONDITIONS

Apply sealant when the ambient temperature is between 40 and 90 degrees F.

1.4 DELIVERY AND STORAGE

Deliver materials to the job site in unopened manufacturers' external shipping containers, with brand names, date of manufacture, color, and material designation clearly marked thereon. Label elastomeric sealant containers to identify type, class, grade, and use. Carefully handle and store materials to prevent inclusion of foreign materials or subjection to sustained temperatures exceeding 90 degrees F or less than 0 degrees F.

1.5 1.4 LEED DOCUMENTATION

Reporting for LEED Credit EQ.4.1: Submit manufacturer's product date certifying all sealant products comply with VOC requirements of South Coast Air Quality management District (SCAQMD) Rule #1168.

1.6 QUALITY ASSURANCE

1.6.1 Compatibility with Substrate

Verify that each of the sealants are compatible for use with joint substrates.

1.6.2 Joint Tolerance

Provide joint tolerances in accordance with manufacturer's printed instructions.

1.6.3 Mock-Up

Project personnel is responsible for installing sealants in mock-up using materials and techniques approved for use on the project.

1.7 SPECIAL WARRANTY

Manufacturer (product) and Contractor (installation) shall guarantee sealant joint against failure of sealant and against water penetration through each sealed joint for five years.

PART 2 PRODUCTS

2.1 SEALANTS

Provide sealant that has been tested and found suitable for the substrates to which it will be applied.

VOC Content of Interior Sealants: provide sealants and sealant primers for use inside the weatherproofing system that comply with the following limits for VOC content when calculated according to 40 CFR 59, Subpart D (EPA Method 24):

1. Architectural sealants: 250 grams/liter
2. Sealant Primers for non-porous substrates: 250 grams/liter
3. Sealant Primers for porous substrates: 775 grams/liter

2.1.1 Interior Sealant

Provide as follows:

a. Vertical Surfaces - ASTM C 920, Type M, Grade NS, Class 25 Use NT.
b. Horizontal Surfaces - ASTM C 920, ASTM D 1190, Type M Class 25 Use NT.
c. Food Service - Use a vinyl acetate homo-polymer, or other Low VOC, non-toxic sealant approved for use in food preparation areas.
d. Chemical resistance - Ensure that all sealants are chemically compatible or resistant to adjacent materials, or materials that may come into contract with the sealants in the course of the building life.

Provide location(s) and color(s) of sealants for the following:

LOCATION	COLOR
a. Small voids between walls or partitions and adjacent lockers, casework, shelving, door frames, built-in or surface-mounted equipment and fixtures, and similar items.	Match adjacent surface color
b. Perimeter of frames at doors, windows, and access panels which adjoin exposed interior concrete and masonry surfaces.	match adjacent surface color
c. Joints of interior masonry walls and partitions which adjoin columns, pilasters, concrete walls, and exterior walls unless otherwise detailed.	Match adjacent surface color
d. Joints between edge members for acoustical tile and adjoining vertical surfaces.	White
e. Interior locations, not otherwise indicated or specified, where small voids exist between materials specified to be painted.	Match adjacent surface color
f. Joints between bathtubs and ceramic tile; joints between shower receptors and ceramic tile; joints formed where nonplaner tile surfaces meet.	White

LOCATION	COLOR
g. Joints formed between tile floors and tile base cove; joints between tile and dissimilar materials; joints occurring where substrates change.	Match color of grout
h. Behind escutcheon plates at valve pipe penetrations and showerheads in showers.	White

2.1.2 Exterior Sealant

For joints in vertical surfaces, provide ASTM C920, Type S or M, Grade NS, Class 25, Use NT. For joints in horizontal surfaces, provide ASTM C920, Type S or M, Grade P, Class 25, Use T. Provide location(s) and color(s) of sealant as follows:

LOCATION	COLOR
a. Joints and recesses formed where frames and subsills of windows, doors, louvers, and vents adjoin masonry, concrete, or metal frames. Use sealant at both exterior and interior surfaces of exterior wall penetrations.	Match adjacent surface color
b. Joints between new and existing exterior masonry walls.	N/A
c. Masonry joints where shelf angles occur.	Match adjacent color mortar
d. Joints in wash surfaces of stonework.	Match adjacent surface color
e. Expansion and control joints.	Match adjacent surface color
f. Interior face of expansion joints in exterior concrete or masonry walls where metal expansion joint covers are not required.	Match adjacent mortar color
g. Voids where items pass through exterior walls.	Match existing mortar color
h. Metal reglets, where flashing is inserted into masonry joints, and where flashing is penetrated by coping dowels.	Match flashing color or if concealed color White
i. Metal-to-metal joints where sealant is indicated or specified.	Match adjacent surface color
j. Joints between ends of gravel stops, fascias, copings, and adjacent walls.	Match metal color

2.1.3 Floor Joint Sealant

ASTM C920, Type S or M, Grade P, Class 25, Use T. Provide location(s) and color(s) of sealant as follows:

LOCATION	COLOR
a. Seats of metal thresholds for exterior doors.	Gray
b. Control and expansion joints in floors, slabs, ceramic tile, and walkways.	Gray, match grout color at tile

2.1.4 Acoustical Sealant

Rubber or polymer-based acoustical sealant conforming to ASTM C919 must have a flame spread of 25 or less and a smoke developed rating of 50 or less when tested in accordance with ASTM E84. Acoustical sealant must have a consistency of 250 to 310 when tested in accordance with ASTM D217, and must remain flexible and adhesive after 500 hours of accelerated weathering as specified in ASTM C734, and must be non-staining.

2.1.5 Preformed Sealant

Provide preformed sealant of polybutylene or isoprene-butylene based pressure sensitive weather resistant tape or bead sealant capable of sealing out moisture, air and dust when installed as recommended by the manufacturer. At temperatures from minus 30 to plus 160 degrees F, the sealant must be non-bleeding and no loss of adhesion.

2.1.5.1 Tape

Tape sealant: Provide cross-section dimensions of one-half joint width or 1/4 inch minimum.

2.1.5.2 Bead

Bead sealant: Provide cross-section dimensions of one-half joint width or 1/4 inch minimum.

2.1.5.3 Foam Strip

Provide untreated foam strip of polyurethane foam; with cross-section dimensions of 1.25 times the area to be sealed. Provide foam strip capable of sealing out moisture, air, and dust when installed and compressed as recommended by the manufacturer. Service temperature must beminus 40 to plus 275 degrees F. Furnish untreated strips with adhesive to hold them in place. Do not allow adhesive to stain or bleed into adjacent finishes. Saturate treated strips with butylene waterproofing or impregnated with asphalt.

2.2 PRIMERS

Provide a nonstaining, quick-drying type and consistency recommended by the sealant manufacturer for the particular application.

2.3 BOND BREAKERS

Provide the type and consistency recommended by the sealant manufacturer to prevent adhesion of the sealant to backing or to bottom of the joint.

2.4 BACKSTOPS

Provide glass fiber roving or neoprene, butyl, polyurethane, or polyethylene foams free from oil or other staining elements as recommended by sealant manufacturer. Provide 25 to 33 percent oversized backing for closed cell and 40 to 50 percent oversized backing for open cell material, unless otherwise indicated. Make backstop material compatible with sealant. Do not use oakum and other types of absorptive materials as backstops.

2.4.1 Rubber

Conform to ASTM D1056, Type 1, open cell, or Type 2, closed cell, Class A, round cross section for cellular rubber sponge backing.

2.4.2 PVC

Conform to ASTM D1667, Grade VO 12 , open-cell foam, round cross section for Polyvinyl chloride (PVC) backing.

2.4.3 Synthetic Rubber

Conform to ASTM C509, Option I, Type I preformed rods or tubes for Synthetic rubber backing.

2.4.4 Neoprene

Conform to ASTM D1056, closed cell expanded neoprene cord Type 2, Class C, Grade 2C2 for Neoprene backing.

2.4.5 Butyl Rubber Based

Provide Butyl Rubber Based Sealants of single component, solvent release, color from manufacturer's Standards, conforming to ASTM C1311.

2.4.6 Silicon Rubber Base

Provide Silicon Rubber Based Sealants of single component, solvent release, color as per DOR, conforming to ASTM C920, Non-sag, Type S or M, Grade NS, Class 25.

2.5 CLEANING SOLVENTS

Provide type(s) recommended by the sealant manufacturer except for aluminum and bronze surfaces that will be in contact with sealant.

PART 3 EXECUTION

3.1 3.1 GENERAL REQUIREMENTS

Sealant joint design, priming, tooling, masking, cleaning and application shall be in accordance with the general requirements of "Sealants: A Professional Guide" from the Sealant, Waterproofing and Restoration Institute, (SWRI).

3.2 SURFACE PREPARATION

Clean surfaces from dirt frost, moisture, grease, oil, wax, lacquer, paint, or other foreign matter that would tend to destroy or impair adhesion. Remove oil and grease with solvent. Surfaces must be wiped dry with clean cloths. When resealing an existing joint, remove existing caulk or sealant prior to applying new sealant. For surface types not listed below, contact sealant manufacturer for specific recommendations.

3.2.1 Steel Surfaces

Remove loose mill scale by sandblasting or, if sandblasting is impractical or would damage finish work, scraping and wire brushing. Remove protective coatings by sandblasting or using a residue-free solvent.

3.2.2 Aluminum or Bronze Surfaces

Remove temporary protective coatings from surfaces that will be in contact with sealant. When masking tape is used as a protective coating, remove tape and any residual adhesive just prior to sealant application. For removing protective coatings and final cleaning, use nonstaining solvents recommended by the manufacturer of the item(s) containing aluminum or bronze surfaces.

3.2.3 Concrete and Masonry Surfaces

Where surfaces have been treated with curing compounds, oil, or other such materials, remove materials by sandblasting or wire brushing. Remove laitance, efflorescence and loose mortar from the joint cavity.

3.2.4 Wood Surfaces

Keep wood surfaces to be in contact with sealants free of splinters and sawdust or other loose particles.

3.3 SEALANT PREPARATION

Do not add liquids, solvents, or powders to the sealant. Mix multicomponent elastomeric sealants in accordance with manufacturer's instructions.

3.4 APPLICATION

3.4.1 Joint Width-To-Depth Ratios

a. Acceptable Ratios:

JOINT WIDTH	JOINT DEPTH	
	Minimum	Maximum
For metal, glass, or other nonporous surfaces:		
1/4 inch (minimum)	1/4 inch	1/4 inch
over 1/4 inch	1/2 of width	Equal to width

JOINT WIDTH	JOINT DEPTH	
	Minimum	Maximum
For wood, concrete, masonry:		
1/4 inch (minimum)	1/4 inch	1/4 inch
over 1/4 inch to 1/2 inch	1/4 inch	Equal to width
over 1/2 inch to 2 inch	1/2 inch	5/8 inch
Over 2 inch	As recommended by sealant manufacturer	

b. Unacceptable Ratios: Where joints of acceptable width-to-depth ratios have not been provided, clean out joints to acceptable depths and grind or cut to acceptable widths without damage to the adjoining work. Grinding is not required on metal surfaces.

3.4.2 Masking Tape

Place masking tape on the finish surface on one or both sides of a joint cavity to protect adjacent finish surfaces from primer or sealant smears. Remove masking tape within 10 minutes after joint has been filled and tooled.

3.4.3 Backstops

Install backstops dry and free of tears or holes. Tightly pack the back or bottom of joint cavities with backstop material to provide a joint of the depth specified. Install backstops in the following locations:

a. Where indicated.

b. Where backstop is not indicated but joint cavities exceed the acceptable maximum depths specified in paragraph entitled, "Joint Width-to-Depth Ratios".

3.4.4 Primer

Immediately prior to application of the sealant, clean out loose particles from joints. Where recommended by sealant manufacturer, apply primer to joints in concrete masonry units, wood, and other porous surfaces in accordance with sealant manufacturer's instructions. Do not apply primer to exposed finish surfaces.

3.4.5 Bond Breaker

Provide bond breakers to the back or bottom of joint cavities, as recommended by the sealant manufacturer for each type of joint and sealant used, to prevent sealant from adhering to these surfaces. Carefully apply the bond breaker to avoid contamination of adjoining surfaces or breaking bond with surfaces other than those covered by the bond breaker.

3.4.6 Sealants

Provide a sealant compatible with the material(s) to which it is applied. Do not use a sealant that has exceeded shelf life or has jelled and can not

be discharged in a continuous flow from the gun. Apply the sealant in accordance with the manufacturer's printed instructions with a gun having a nozzle that fits the joint width. Force sealant into joints to fill the joints solidly without air pockets. Tool sealant after application to ensure adhesion. Make sealant uniformly smooth and free of wrinkles. Upon completion of sealant application, roughen partially filled or unfilled joints, apply sealant, and tool smooth as specified. Apply sealer over the sealant when and as specified by the sealant manufacturer.

3.5 PROTECTION AND CLEANING

3.5.1 Protection

Protect areas adjacent to joints from sealant smears. Masking tape may be used for this purpose if removed 5 to 10 minutes after the joint is filled.

3.5.2 Final Cleaning

Upon completion of sealant application, remove remaining smears and stains and leave the work in a clean and neat condition.

a. Masonry and Other Porous Surfaces: Immediately scrape off fresh sealant that has been smeared on masonry and rub clean with a solvent as recommended by the sealant manufacturer. Allow excess sealant to cure for 24 hour then remove by wire brushing or sanding.

b. Metal and Other Non-Porous Surfaces: Remove excess sealant with a solvent-moistened cloth.

-- End of Section --

THIS PAGE HAS BEEN INTENTIONALLY LEFT BLANK

SECTION 08 11 13

STEEL DOORS AND FRAMES
02/10

PART 1 GENERAL

1.1 REFERENCES

The publications listed below form a part of this specification to the extent referenced. The publications are referred to in the text by the basic designation only.

AMERICAN WELDING SOCIETY (AWS)

AWS D1.1/D1.1M	(2010; Errata 2011) Structural Welding Code - Steel

ASTM INTERNATIONAL (ASTM)

ASTM A653/A653M	(2015) Standard Specification for Steel Sheet, Zinc-Coated (Galvanized) or Zinc-Iron Alloy-Coated (Galvannealed) by the Hot-Dip Process
ASTM A879/A879M	(2012) Standard Specification for Steel Sheet, zinc Coated by the Electrolytic Process for Applications Requiring Designation of the Coating Mass on Each Surface
ASTM A924/A924M	(2014) Standard Specification for General Requirements for Steel Sheet, Metallic-Coated by the Hot-Dip Process
ASTM C578	(2015b) Standard Specification for Rigid, Cellular Polystyrene Thermal Insulation
ASTM C591	(2013) Standard Specification for Unfaced Preformed Rigid Cellular Polyisocyanurate Thermal Insulation
ASTM C612	(2014) Mineral Fiber Block and Board Thermal Insulation
ASTM D2863	(2013) Measuring the Minimum Oxygen Concentration to Support Candle-Like Combustion of Plastics (Oxygen Index)
ASTM E1300	(2012a; E 2012) Determining Load Resistance of Glass in Buildings
ASTM F2248	(2012) Standard Practice for Specifying an Equivalent 3-Second Duration Design Loading for Blast Resistant Glazing Fabricated with Laminated Glass

BUILDERS HARDWARE MANUFACTURERS ASSOCIATION (BHMA)

ANSI/BHMA A156.115	(2006) Hardware Preparation in Steel Doors and Steel Frames

NATIONAL FIRE PROTECTION ASSOCIATION (NFPA)

NFPA 105	(2013) Standard for Installation of Smoke Door Assemblies and Other Opening Protectives
NFPA 252	(2012) Standard Methods of Fire Tests of Door Assemblies
NFPA 80	(2013) Standard for Fire Doors and Other Opening Protectives

STEEL DOOR INSTITUTE (SDI/DOOR)

SDI/DOOR 111	(2009) Recommended Selection and Usage Guide for Standard Steel Doors, Frames and Accessories
SDI/DOOR 113	(2001; R2006) Standard Practice for Determining the Steady State Thermal Transmittance of Steel Door and Frame Assemblies
SDI/DOOR A250.11	(2001) Recommended Erection Instructions for Steel Frames
SDI/DOOR A250.6	(2003; R2009) Recommended Practice for Hardware Reinforcing on Standard Steel Doors and Frames
SDI/DOOR A250.8	(2003; R2008) Recommended Specifications for Standard Steel Doors and Frames

UNDERWRITERS LABORATORIES (UL)

UL 10C	(2009) Standard for Positive Pressure Fire Tests of Door Assemblies

1.2 SUBMITTALS

Government approval is required for submittals with a "G" designation; submittals not having a "G" designation are for Contractor Quality Control approval. The following shall be submitted in accordance with Section 01 33 00 SUBMITTAL PROCEDURES:

SD-02 Shop Drawings

Doors

Frames

Accessories

Weatherstripping

Show elevations, construction details, metal gages, hardware provisions, method of glazing, and installation details.

Schedule of doors

Schedule of frames

Submit door and frame locations.

SD-03 Product Data

Doors; G

Frames; G

Accessories

Weatherstripping

Submit manufacturer's descriptive literature for doors, frames, and accessories. Include data and details on door construction, panel (internal) reinforcement, insulation, and door edge construction. When "custom hollow metal doors" are provided in lieu of "standard steel doors," provide additional details and data sufficient for comparison to SDI/DOOR A250.8 requirements.

1.3 DELIVERY, STORAGE, AND HANDLING

Deliver doors, frames, and accessories undamaged and with protective wrappings or packaging. Strap knock-down frames in bundles. Provide temporary steel spreaders securely fastened to the bottom of each welded frame. Store doors and frames on platforms under cover in clean, dry, ventilated, and accessible locations, with 1/4 inch airspace between doors. Remove damp or wet packaging immediately and wipe affected surfaces dry. Replace damaged materials with new.

PART 2 PRODUCTS

2.1 STANDARD STEEL DOORS

SDI/DOOR A250.8, except as specified otherwise. Prepare doors to receive door hardware as specified in Section 08 71 00. Undercut where indicated. Exterior doors shall have top edge closed flush and sealed to prevent water intrusion. Doors shall be 1-3/4 inch thick, unless otherwise indicated. Provide exterior glazing in accordance with ASTM F2248 and ASTM E1300.

2.1.1 Classification - Level, Performance, Model

2.1.1.1 Standard Duty Doors

Standard Duty Standard Duty - Level 1 doors are not used for this building.

2.1.1.2 Heavy Duty Doors

SDI/DOOR A250.8, Level 2, physical performance Level B, Model 1, with core construction as required by the manufacturer for interior doors of size(s) and design(s) indicated. Where vertical stiffener cores are required, the space between the stiffeners shall be filled with mineral board insulation. Provide Level 2 where indicated.

2.1.1.3 Extra Heavy Duty Doors

SDI/DOOR A250.8, Level 3, physical performance Level A, Model 1 with core construction as required by the manufacturer for interior doors and for indicated exterior doors, of size(s) and design(s) indicated. Where vertical stiffener cores are required, the space between the stiffeners shall be filled with mineral board insulation. Provide Level 3 where indicated.

2.1.1.4 Maximum Duty Doors

SDI/DOOR A250.8, Level 4, physical performance Level A, Model 1 with core construction as required by the manufacturer for indicated exterior doors, of size(s) and design(s) indicated. Provide Level 4 where indicated.

2.2 SOUND RATED STEEL DOORS

Doors shall have a Sound Transmission Class (STC) as indicated on the drawings. All perimeter oepnings will be tested along mutilple points to insure a Sound Class of 3 or 4.

2.3 ACCESSORIES

2.3.1 Louvers

2.3.1.1 Interior Louvers

SDI/DOOR 111, Louvers shall be stationary sightproof where scheduled. Detachable moldings on room or non security side of door; on security side of door, moldings to be integral part of louver. Form louver frames of 20 gage steel and louver blades of a minimum 24 gage. Sightproof louvers to be inverted "V" blade design with minimum 55 or inverted "Y" blade design with minimum 40 percent net-free opening.

2.3.1.2 Exterior Louvers

Louvers shall be inverted "Y", "V" or "Z" type with minimum net-free opening as indicated. Weld or tenon louver blades to continuous channel frame and weld assembly to door to form watertight assembly. Form louvers of hot-dip galvanized steel of same gage as door facings. Louvers shall have steel-framed insect, or bird screens as indicated; secured to room side and readily removable. Provide aluminum wire cloth, 18 by 18 or 18 by 16 inch mesh, for insect screens and galvanized steel, 1/2 by 1/2 inch mesh hardware cloth, for bird screens. Net-free louver area to be before screening.

2.3.2 Astragals

For pairs of exterior steel doors which will not have aluminum astragals or removable mullions, as specified in Section 08 71 00 DOOR HARDWARE provide overlapping steel astragals with the doors. For interior pairs of fire rated and smoke control doors, provide stainless steel astragals complying with NFPA 80 for fire rated assemblies and NFPA 105 for smoke control assemblies.

2.3.3 Moldings

Provide moldings around glass of interior and exterior doors and louvers of

interior doors. Provide nonremovable moldings on outside of exterior doors and on corridor side of interior doors. Other moldings may be stationary or removable. Secure inside moldings to stationary moldings, or provide snap-on moldings. Muntins shall interlock at intersections and shall be fitted and welded to stationary moldings.

2.4 INSULATION CORES

Insulated cores shall be of type specified, and provide an apparent U-factor of .48 in accordance with SDI/DOOR 113 and shall conform to:

a. Rigid Cellular Polyisocyanurate Foam: ASTM C591, Type I or II, foamed-in-place or in board form, with oxygen index of not less than 22 percent when tested in accordance with ASTM D2863; or

b. Rigid Polystyrene Foam Board: ASTM C578, Type I or II; or

c. Mineral board: ASTM C612, Type I.

2.5 STANDARD STEEL FRAMES

SDI/DOOR A250.8, Level 2 3, 4 to match door except as otherwise specified. Form frames to sizes and shapes indicated, with welded corners or knock-down field-assembled corners. Provide steel frames for doors, transoms, sidelights, mullions, and interior glazed panels as indicated.

2.5.1 Welded Frames

Continuously weld frame faces at corner joints. Mechanically interlock or continuously weld stops and rabbets. Grind welds smooth.

Weld frames in accordance with the recommended practice of the Structural Welding Code Sections 1 through 6, AWS D1.1/D1.1M and in accordance with the practice specified by the producer of the metal being welded.

Provide welded frames for all interior and exterior hollow metal doors. Provide factory installed mortar guards at hinge and strike openings at all frames that will be set in a masonry wall.

2.5.2 Knock-Down Frames

Knock-down frames are not used in this building.

2.5.3 Stops and Beads

Form stops and beads from 20 gage steel. Provide for glazed and other openings in standard steel frames. Secure beads to frames with oval-head, countersunk Phillips self-tapping sheet metal screws or concealed clips and fasteners. Space fasteners approximately 12 to 16 inch on center. Miter molded shapes at corners. Butt or miter square or rectangular beads at corners.

2.5.4 Terminated Stops

Where indicated, terminate interior door frame stops 6 inch above floor. Do not terminate stops of frames for lightproof, soundproof, or lead-lined doors.

2.5.5 Cased Openings

Fabricate frames for cased openings of same material, gage, and assembly as specified for metal door frames, except omit door stops and preparation for hardware.

2.5.6 Anchors

Provide anchors to secure the frame to adjoining construction. Provide steel anchors, zinc-coated or painted with rust-inhibitive paint, not lighter than 18 gage.

2.5.6.1 Wall Anchors

Provide at least three anchors for each jamb. For frames which are more than 7.5 feet in height, provide one additional anchor for each jamb for each additional 2.5 feet or fraction thereof.

a. Masonry: Provide anchors of corrugated or perforated steel straps or 3/16 inch diameter steel wire, adjustable or T-shaped;

b. Stud partitions: Weld or otherwise securely fasten anchors to backs of frames. Design anchors to be fastened to closed steel studs with sheet metal screws, and to open steel studs by wiring or welding;

c. Completed openings: Secure frames to previously placed concrete or masonry with expansion bolts in accordance with SDI/DOOR 111.

2.5.6.2 Floor Anchors

Provide floor anchors drilled for 3/8 inch anchor bolts at bottom of each jamb member. Where floor fill occurs, terminate bottom of frames at the indicated finished floor levels and support by adjustable extension clips resting on and anchored to the structural slabs.

2.6 FIRE AND SMOKE DOORS AND FRAMES

NFPA 80 and NFPA 105 and this specification. The requirements of NFPA 80 and NFPA 105 shall take precedence over details indicated or specified.

2.6.1 Labels

Fire doors and frames shall bear the label of Underwriters Laboratories (UL), Factory Mutual Engineering and Research (FM), or Warnock Hersey International (WHI) attesting to the rating required. Testing shall be in accordance with NFPA 252 or UL 10C. Labels shall be metal with raised letters, and shall bear the name or file number of the door and frame manufacturer. Labels shall be permanently affixed at the factory to frames and to the hinge edge of the door. Door labels shall not be painted.

2.7 WEATHERSTRIPPING

As specified in Section 08 71 00 DOOR HARDWARE.

2.8 HARDWARE PREPARATION

Provide minimum hardware reinforcing gages as specified in SDI/DOOR A250.6. Drill and tap doors and frames to receive finish hardware. Prepare doors

and frames for hardware in accordance with the applicable requirements of SDI/DOOR A250.8 and SDI/DOOR A250.6. For additional requirements refer to ANSI/BHMA A156.115. Drill and tap for surface-applied hardware at the project site. Build additional reinforcing for surface-applied hardware into the door at the factory. Locate hardware in accordance with the requirements of SDI/DOOR A250.8, as applicable. Punch door frames, with the exception of frames that will have weatherstripping or soundproof gasketing, to receive a minimum of two rubber or vinyl door silencers on lock side of single doors and one silencer for each leaf at heads of double doors. Set lock strikes out to provide clearance for silencers.

Note: For doors with electronic locking provide cut-outs that will accommodate recessed door position switches.

2.9 FINISHES

2.9.1 Factory-Primed Finish

All surfaces of doors and frames shall be thoroughly cleaned, chemically treated and factory primed with a rust inhibiting coating as specified in SDI/DOOR A250.8., or paintable A25 galvannealed steel without primer. Where coating is removed by welding, apply touchup of factory primer.

2.9.2 Hot-Dip Zinc-Coated and Factory-Primed Finish

Fabricate exterior doors and frames from hot dipped zinc coated steel, alloyed type, that complies with ASTM A924/A924Mand ASTM A653/A653M. The coating weight shall meet or exceed the minimum requirements for coatings having 0.4 ounces per square foot, total both sides, i.e., A40. Repair damaged zinc-coated surfaces by the application of zinc dust paint. Thoroughly clean and chemically treat to insure maximum paint adhesion. Factory prime as specified in SDI/DOOR A250.8.

2.9.3 Electrolytic Zinc-Coated Anchors and Accessories

Provide electrolytically deposited zinc-coated steel in accordance with ASTM A879/A879M, Commercial Quality, Coating Class A. Phosphate treat and factory prime zinc-coated surfaces as specified in SDI/DOOR A250.8.

2.10 FABRICATION AND WORKMANSHIP

Finished doors and frames shall be strong and rigid, neat in appearance, and free from defects, waves, scratches, cuts, dents, ridges, holes, warp, and buckle. Molded members shall be clean cut, straight, and true, with joints coped or mitered, well formed, and in true alignment. Dress exposed welded and soldered joints smooth. Design door frame sections for use with the wall construction indicated. Corner joints shall be well formed and in true alignment. Conceal fastenings where practicable. On wraparound frames for masonry partitions, provide a throat opening 1/8 inch larger than the actual masonry thickness. Design frames in exposed masonry walls or partitions to allow sufficient space between the inside back of trim and masonry to receive caulking compound.

2.10.1 Grouted Frames

For frames to be installed in exterior walls and to be filled with mortar or grout, fill the stops with strips of rigid insulation to keep the grout out of the stops and to facilitate installation of stop-applied head and jamb seals. Note: make allowance for exterior doors that are equipped with

electronic door strikes.

2.11 PROVISIONS FOR GLAZING

Materials are specified in Section 08 81 00, GLAZING.

PART 3 EXECUTION

3.1 INSTALLATION

3.1.1 Frames

Set frames in accordance with SDI/DOOR A250.11. Plumb, align, and brace securely until permanent anchors are set. Anchor bottoms of frames with expansion bolts or powder-actuated fasteners. Build in or secure wall anchors to adjoining construction. Where frames require ceiling struts or overhead bracing, anchor frames to the struts or bracing. Backfill frames with mortar at frames set in massonry walls. Coat inside of frames with corrosion-inhibiting bituminous material. For frames in exterior walls, ensure that stops are filled with rigid insulation before grout is placed.

3.1.2 Doors

Hang doors in accordance with clearances specified in SDI/DOOR A250.8. After erection and glazing, clean and adjust hardware.

3.1.3 Fire and Smoke Doors and Frames

Install fire doors and frames, including hardware, in accordance with NFPA 80. Install fire rated smoke doors and frames in accordance with NFPA 80 and NFPA 105.

3.2 PROTECTION

Protect doors and frames from damage. Repair damaged doors and frames prior to completion and acceptance of the project or replace with new, as directed. Wire brush rusted frames until rust is removed. Clean thoroughly. Apply an all-over coat of rust-inhibitive paint of the same type used for shop coat.

3.3 CLEANING

Upon completion, clean exposed surfaces of doors and frames thoroughly. Remove mastic smears and other unsightly marks.

-- End of Section --

SECTION 08 14 00

WOOD DOORS
08/11

PART 1 GENERAL

1.1 REFERENCES

The publications listed below form a part of this specification to the extent referenced. The publications are referred to in the text by the basic designation only.

ARCHITECTURAL WOODWORK INSTITUTE (AWI)

AWI AWS	(2009) Architectural Woodwork Standards

ASTM INTERNATIONAL (ASTM)

ASTM E90	(2009) Standard Test Method for Laboratory Measurement of Airborne Sound Transmission Loss of Building Partitions and Elements

NATIONAL ELECTRICAL MANUFACTURERS ASSOCIATION (NEMA)

ANSI/NEMA LD 3	(2005) Standard for High-Pressure Decorative Laminates

NATIONAL FIRE PROTECTION ASSOCIATION (NFPA)

NFPA 80	(2013) Standard for Fire Doors and Other Opening Protectives

U.S. GREEN BUILDING COUNCIL (USGBC)

LEED GBDC	(2009) LEED Reference Guide for Green Building Design and Construction
LEED NC	(2009) Leadership in Energy and Environmental Design(tm) New Construction Rating System

WINDOW AND DOOR MANUFACTURERS ASSOCIATION (WDMA)

ANSI/WDMA I.S.1A	(2013) Interior Architectural Wood Flush Doors
WDMA I.S.4	(2013) Preservative Treatment for Millwork
WDMA TM-7	(2008) Cycle Slam Test Method
WDMA TM-8	(2008) Hinge Loading Test Method

1.2 SUBMITTALS

Submit the following in accordance with Section 01 33 00 SUBMITTAL PROCEDURES.

SD-02 Shop Drawings

Doors; G

Submit drawings or catalog data showing each type of door unit; descriptive data of head and jamb weatherstripping with installation instructions shall be included. Drawings and data shall indicate door type and construction, sizes, thickness, door louvers, and glazing,.

SD-03 Product Data

Doors; G

Accessories

Water-resistant sealer

Sample warranty

Sound transmission class rating; G

Local/Regional Materials; (LEED NC)

LEED documentation relative to local/regional materials credit in accordance with LEED GBDC. Include in LEED Documentation Notebook.

SD-04 Samples

Doors

Prior to the delivery of wood doors, submit a sample section of each type of door which shows the stile, rail, veneer, finish, and core construction.

Door finish colors; G

Submit a minimum of three color selection samples , minimum 3 by 5 inches in size representing wood stain for selection by the NAVFAC Interior Designer.

SD-06 Test Reports

Cycle-slam

Hinge loading resistance

Submit cycle-slam test report for doors tested in accordance with WDMA TM-7, and hinge loading resistance test report for doors tested in accordance with WDMA TM-8.

1.3 LOCAL/REGIONAL MATERIALS

Use products extracted, harvested, or recovered, as well as manufactured, within a 500 mile radius from the project site, if available from a minimum of three sources. Refer to Section 01 33 29 LEED DOCUMENTATION for cumulative total local material requirements. Wood doors may be locally available.

1.4 DELIVERY, STORAGE, AND HANDLING

Deliver doors to the site in an undamaged condition and protect against damage and dampness. Stack doors flat under cover. Support on blocking, a minimum of 4 inch thick, located at each end and at the midpoint of the door. Store doors in a well-ventilated building so that they will not be exposed to excessive moisture, heat, dryness, direct sunlight, or extreme changes of temperature and humidity. Do not store in a building under construction until concrete, masonry work, and plaster are dry. Replace defective or damaged doors with new ones.

1.5 WARRANTY

Warrant doors free of defects as set forth in the door manufacturer's standard door warranty.

PART 2 PRODUCTS

2.1 DOORS

Provide doors of the types, sizes, and designs indicated free of urea-formaldehyde resins.

2.1.1 Flush Doors

Conform to ANSI/WDMA I.S.1A for flush doors. Provide hollow core doors with lock blocks and 1 inch minimum thickness hinge stile. Hardwood stile edge bands of doors receives a natural finish, compatible with face veneer. Provide mill option for stile edge of doors scheduled to be painted. No visible finger joints will be accepted in stile edge bands. When used, locate finger-joints under hardware.

2.1.1.1 Interior Flush Doors

Provide particleboard core, Type II flush doors conforming to ANSI/WDMA I.S.1A with faces of premium grade natural birch. Hardwood veneers shall be rotary cut book matched.

2.1.2 Acoustical Doors

ANSI/WDMA I.S.1A, solid core, constructed to provide Sound Transmission Class rating as indicated on door schedule when tested in accordance with ASTM E90; also see section 8 71 00 DOOR HARDWARE.

2.2 ACCESSORIES

2.2.1 Door Louvers

Fabricate from wood and of sizes indicated. Provide louvers with a minimum of 35 percent free air. Equip louvers with sightproof inverted vee slat type. Mount louvers in the door with wood lip moldings.

2.2.2 Door Light Openings

Provide glazed openings with the manufacturer's standard wood moldings. Provide moldings on the exterior doors with sloped surfaces. Lip type moldings for flush doors.

2.2.3 Additional Hardware Reinforcement

Provide the minimum lock blocks to secure the specified hardware. The measurement of top, bottom, and intermediate rail blocks are a minimum 125 mm 5 inch by full core width. Comply with the manufacturer's labeling requirements for reinforcement blocking, but not mineral material similar to the core. Also see additional notes below at paragrapth entitled, Prefitting.

2.3 FABRICATION

2.3.1 Marking

Stamp each door with a brand, stamp, or other identifying mark indicating quality and construction of the door.

2.3.2 Quality and Construction

Identify the standard on which the construction of the door was based and identify doors having a Type I glue bond.

2.3.3 Preservative Treatment

Treat doors scheduled for restrooms, janitor closets and other possible wet locations including exterior doors with a water-repellent preservative treatment and so marketed at the manufacturer's plant in accordance with WDMA I.S.4.

2.3.4 Adhesives and Bonds

ANSI/WDMA I.S.1A. Use Type I bond for exterior doors and Type II bond for interior doors. Provide a nonstaining adhesive on doors with a natural finish.

2.3.5 Prefitting

Provide factory prefinished factory prefitted doors for the specified hardware, door frame and door-swing indicated. Machine and size doors at the factory by the door manufacturer in accordance with the standards under which the doors are produced and manufactured. The work includes sizing, beveling edges, mortising, and drilling for hardware and providing necessary beaded openings for glass and louvers. Provide the door manufacturer with the necessary hardware samples, and frame and hardware schedules to coordinate the work.

a. Note: many interior wood doors are equipped with mortise locksets; see Door Schedule and Hardware Schedule.
b. For doors with electronic locking provide cut-outs that will accommodate recessed door position switches; see Door Schedule and Hardware Schedule.

2.3.6 Finishes

2.3.6.1 Field Painting

Factory prime or seal doors, and field paint.

2.3.6.2 Factory Finish

Provide doors finished at the factory by the door manufacturer as follows: AWI AWS Section 1500, specification for System No. 4 Conversion varnish alkyd urea or System No. 5 Vinyl catalyzed. The coating is AWI AWS premium, medium rubbed sheen, open grain effect. Use stain when required to produce the finish specified for color. Seal edges, cutouts, trim, and wood accessories, and apply two coats of finish compatible with the door face finish. Touch-up finishes that are scratched or marred, or where exposed fastener holes are filled, in accordance with the door manufacturer's instructions. Match color and sheen of factory finish using materials compatible for field application.

2.3.6.3 Plastic Laminate Finish

Factory applied, ANSI/NEMA LD 3, General or Specific purpose type, 0.050 inch minimum thickness. Glue laminated plastic for hollow core doors to wood veneer, plywood, or hardboard backing to form door panel. Provide a combined thickness of laminate sheet and backing of 0.10 inch minimum.

2.3.6.4 Color

Provide door finish colors as specified.

2.3.7 Water-Resistant Sealer

Provide manufacturer's standard water-resistant sealer compatible with the specified finishes.

2.4 SOURCE QUALITY CONTROL

Meet or exceed the following minimum performance criteria of stiles of "B" and "C" label fire doors utilizing standard mortise leaf hinges:

a. Cycle-slam: 200,000 cycles with no loose hinge screws or other visible signs of failure when tested in accordance with the requirements of WDMA TM-7.

b. Hinge loading resistance: Averages of ten test samples not less than 700 pounds load when tested for direct screw withdrawal in accordance with WDMA TM-8 using a No. 12, 1-1/4 inch long, steel, fully threaded wood screw. Drill 5/32 inch pilot hole, use 1-1/2 inch opening around screw for bearing surface, and engage screw full, except for last 1/8 inch. Do not use a steel plate to reinforce screw area.

PART 3 EXECUTION

3.1 INSTALLATION

Before installation, seal top and bottom edges of doors with the approved water-resistant sealer. Seal cuts made on the job immediately after cutting using approved water-resistant sealer. Fit, trim, and hang doors with a 1/16 inch minimum, 1/8 inch maximum clearance at sides and top, and a 3/16 inch minimum, 1/4 inch maximum clearance over thresholds. Provide 3/8 inch minimum, 7/16 inch maximum clearance at bottom where no threshold occurs. Bevel edges of doors at the rate of 1/8 inch in 2 inch. Door warp shall not exceed1/4 inch when measured in accordance with ANSI/WDMA I.S.1A.

3.1.1 Fire Doors

Install fire doors in accordance with NFPA 80. Do not paint over labels.

-- End of Section --

SECTION 08 34 73

SOUND CONTROL DOOR ASSEMBLIES
02/15

PART 1 GENERAL

1.1 REFERENCES

The publications listed below form a part of this specification to the extent referenced. The publications are referred to within the text by the basic designation only.

AMERICAN WELDING SOCIETY (AWS)

AWS D1.3/D1.3M	(2008; Errata 2008) Structural Welding Code - Sheet Steel

ARCHITECTURAL WOODWORK INSTITUTE (AWI)

AWI AWS	(2009) Architectural Woodwork Standards

ASTM INTERNATIONAL (ASTM)

ASTM A1008/A1008M	(2015) Standard Specification for Steel, Sheet, Cold-Rolled, Carbon, Structural, High-Strength Low-Alloy and High-Strength Low-Alloy with Improved Formability, Solution Hardened, and Bake Hardened
ASTM A1011/A1011M	(2014) Standard Specification for Steel, Sheet, and Strip, Hot-Rolled, Carbon, Structural, High-Strength Low-Alloy and High-Strength Low-Alloy with Improved Formability and Ultra-High Strength
ASTM A108	(2013) Standard Specification for Steel Bar, Carbon and Alloy, Cold-Finished
ASTM A36/A36M	(2014) Standard Specification for Carbon Structural Steel
ASTM A568/A568M	(2014) Standard Specifications for Steel, Sheet, Carbon, Structural, and High-Strength, Low-Alloy, Hot-Rolled and Cold-Rolled, General Requirements for
ASTM D1056	(2014) Standard Specification for Flexible Cellular Materials - Sponge or Expanded Rubber
ASTM D6386	(2010) Standard Practice for Preparation of Zinc (Hot-Dip Galvanized) Coated Iron and Steel Product and Hardware Surfaces for Painting
ASTM E1289	(2008) Standard Specification for Reference Specimen for Sound Transmission

	Loss
ASTM E336	(2014) Measurement of Airborne Sound Insulation in Buildings
ASTM E413	(2010) Rating Sound Insulation
ASTM E90	(2009) Standard Test Method for Laboratory Measurement of Airborne Sound Transmission Loss of Building Partitions and Elements

1.2 SUBMITTALS

Government approval is required for submittals with a "G" designation; submittals not having a "G" designation are for Contractor Quality Control approval. Submittals with an "S" are for inclusion in the Sustainability Notebook, in conformance to Section 01 33 29 SUSTAINABILITY REPORTING. Submit the following in accordance with Section 01 33 00 SUBMITTAL PROCEDURES:

SD-02 Shop Drawings

Hollow Metal Sound Retardant Doors; G

Wood Sound Retardant Swinging Doors; G

Door Frames; G

SD-03 Product Data

Hollow Metal Sound Retardant Doors; G

Wood Sound Retardant Swinging Doors; G

Door Frames; G

Door Hardware; G

Seals and Gasketing; G

Thresholds; G

Astragals; G

SD-06 Test Reports

Wind Loading Tests; G

Water Leakage Tests; G

Acoustical Tests; G

Air Infiltration Tests; G

SD-07 Certificates

Hollow Metal Sound Retardant Doors; G

Wood Sound Retardant Doors; G

Door Frames; G

Door Hardware; G

1.3 QUALITY CONTROL

Ensure work within this section is designed and furnished by one manufacturer, who has been engaged in the manufacture of Wood Sound Retardant Swinging Door, Hollow Metal Door and Steel Door systems for at least five years prior to the start of this work.

Provide acoustic assemblies manufactured by a single source specializing in the production of this type work for a minimum of 5 years.

1.4 DELIVERY, STORAGE, AND HANDLING

Ship all doors in the manufacturer's undamaged individual cartons, securely bundled and wrapped with moisture-resistant covers and stored in accordance with the manufacturer's printed instructions in a dry, clean, and ventilated area.

Deliver and store wood doors in the building following the installation of concrete, terrazzo, plaster, or other wet materials, and only after the building has dried out and has a roof.

Maintain relative humidity in the building between 30 and 65 percent. Maintain the ambient temperature at 60 degrees F minimum at the time of installation of wood doors.

Perform final adjustment of seals when temperatures and humidity conditions replicate the interior conditions that will exist when the building is occupied.

PART 2 PRODUCTS

2.1 SYSTEM DESCRIPTION

Provide sound retardant door assemblies of the thickness, width, and height indicated, complete with perimeter seals, seal housings, gasketing, automatic door bottoms, thresholds, and door frames as required to conform to the specified STC per ASTM E90 and ASTM E1289.

Submit certificates showing conformance with the referenced standards in this section, and manufacturer's catalog data including STC ratings and UL fire rating, where applicable, for the following items: Hollow metal sound retardant doors; wood sound retardant doors; door frames; door hardware; ; thresholds; and astragals.

Provide assemblies that are complete with metal frame, wood door(s), sealing system, and Cam-lift hinges (when required). If vision lights are specified for doors, provide metal loose stops and field install glass and glazing when shipped separately.

2.1.1 Design Requirements

2.1.1.1 Door Design

Provide Wood Sound Retardant Swinging Doors that are a 1-3/4-inch thickness

construction with sizes as indicated on drawings. No visible seams are permitted on door faces. Provide face gauges, internal sound retardant core and perimeter door edge construction per manufacturer's standard for the specified STC rating. No lead or asbestos is permitted in door construction to achieve STC performance. Provide face veneer species cut and color as selected from manufacturer's full range of available colors and patterns on wood doors.

2.1.1.2 Frame Design

Provide sound Retardant Metal Frames conforming to ASTM A1008/A1008M, not less than 0.0747-inch thick, and free from pitting, scale, stretcher strains, fluting, and surface defects with integral trim and shipped with temporary spreader. Knockdown frames are not acceptable.

Provide frames with 2-inch faces, profiles and dimensions as indicated, with mitered reinforced corners, welded the full depth of frame and trim, with exposed surfaces ground smooth and flush. Close contact edges to hairline joints.

2.1.2 Performance Requirements

2.1.2.1 STC (Sound Transmission Classification) Rating

Provide doors with an STC indicated on the door schedule.

2.2 FABRICATION

Provide doors that are minimum 16 gauge, 1-3/4-inch thick with welded, seamless construction. No visible joints are permitted on the exposed faces or edges. Join door skins at vertical edges by continuous welds, ground and dressed smooth to provide a flush finish. Reinforce top and bottom with 16 gauge continuous inverted steel channels spot welded to both faces. Finish both top and bottom to provide a smooth flush condition. Bevel both vertical edges 1/8-inch in 2-inches.

Clean and sand to smooth finish all doors to remove handling and storage marks, raised grain, minor surface marks and abrasions which are to receive a job site finish.

2.2.1 Hollow Metal Sound Retardant Doors

Conform to ASTM A1008/A1008M for door construction utilizing 18 gauge steel facing sheets. Conform stretcher level flatness to ASTM A568/A568M; not less than0.0598-inch thick; free from pitting, scale, and surface defects; separated by a core construction designed to meet the required STC; and tested and rated in accordance with ASTM E90.

Provide doors that have flush seamless face sheets and vertical edges, with continuous welded and smooth joints. Provide edges that are flush or rabbeted as required for perimeter seals.

Provide door surfaces that are visually flat and free from warp, waviness, and other surface irregularities and defects. Maximum allowable warp or twist-can not exceed 1/8-inch when measured with a 7-foot straightedge along the diagonal and not exceed 1/16-inch when measured with a 7-foot straightedge in the width or in any position along the length of the door.

Provide hardware reinforcement that is steel drilled, tapped to template

requirements and welded in place. Provide minimum thicknesses as follows:

a. Butts, 0.1494-inch

b. Lock strike, 0.1196-inch

c. Surface applied hardware 0.0747-inch

Shop paint exposed door surfaces, including surfaces that are galvanized.

Shop paint concealed exterior door surfaces except galvanized surfaces.

Thoroughly clean all mill scale, rust, oil, grease, dirt, and other foreign materials from surfaces before the application of the shop coat of paint.

After cleaning, provide galvanized surfaces free of paint in accordance with ASTM D6386, Method A, B, C, or D.

Apply to clean prepared dry surfaces one shop coat of rust inhibitive metallic oxide or synthetic resin primer by brush, dipping, or other approved method to provide a continuous minimum dry film thickness (dft) of 0.9 mil.

2.2.2 Door Finishing

Conform factory finishing of Wood Sound Retardant Swinging Doors in accordance with AWI Quality Standards. Provide factory finish of a water-base stain and ultraviolet (UV) cured polyurethane sealer to comply with EPA Title 5 guidelines for Volatile Organic Compound (VOC) emissions limitations. Conform finish to meet or exceed performance standards of AWI AWS catalyzed polyurethane.

2.3 COMPONENTS

2.3.1 Frames

Construct frames for Wood Sound Retardant Swinging Doors from formed sheet steel or structural shapes and bars. Provide sheet steel that is commercial quality, level, cold rolled steel conforming to ASTM A1008/A1008M or hot rolled, pickled and oiled steel conforming to ASTM A1011/A1011M. Comply steel shapes with ASTM A36/A36M and steel bars with ASTM A108, Grade 1018.

2.3.2 Hardware Reinforcements

Factory mortise, reinforce, drill and tap frames for all mortise hardware as required by hardware manufacturer's template. Provide necessary reinforcement plates as required for surface mounted hardware; installer to perform all field drilling and tapping. Provide dust cover boxes on all frame mortises. Provide minimum thicknesses as follows:

a. Butts, 3/16-inch

b. Lock strike, 0.1196-inch

c. Surface applied hardware 0.0747-inch

2.3.3 Anchors

Locate frame anchors near the top and bottom of doors and at intermediate points and 24-inches on center. Provide a minimum of three anchors per jamb.

Provide floor anchor clips at each jamb with 2-inch vertical adjustments on increments not exceeding 1/16-inch.

2.3.4 Door Hardware

Provide the following STC related hardware with the door; cam-lift hinges, perimeter seals, door bottoms, thresholds, hardware standoff brackets.

Include on Installation drawings a finish hardware schedule for each door and a hollow metal door frame schedule for each door indicating profile, dimensions, hardware reinforcement, and frame anchorage. Also indicate perimeter seals, door-bottom devices and other hardware items that are assembled in the shop.

Refer to Section 08 71 00 DOOR HARDWARE for remaining hardware requirements.

2.3.5 Perimeter Seals and Gasketing

Provide a closed-cell, expanded cellular rubber Seal material conforming to ASTM D1056, Type S, Grade SBE-42 or SCE-42 for heads, jambs, and door bottoms.

Install seals in formed steel or extruded aluminum shapes designed to receive and hold seals and to provide concealed adjustable attachment to door frames. Provide concealed adjustment screws that are not more than 12-inches on center and provide at least 3/8-inch adjustment.

Provide door bottoms that are assemblies of closed-cell neoprene seals, seal housings, and automatic operating devices, mounted on the doors as indicated. Design devices to seal the spaces between the doors and the finished floors or thresholds when closed and to retract immediately when doors are opened, with a sill clearance of approximately 1/4-inch.

2.3.6 Thresholds

Provide metal thresholds where indicated. Provide thresholds that are extruded aluminum, 6063-T5 alloy, mill finish, not less than 1/8-inch thick, with integral seal grooves formed to the indicated section.

Provide hardwood thresholds where indicated made of clear, all-heartwood, free of streaks, pin or worm holes, uniform in color, free of defects, finish sanded, and ready for job site transparent or paint finish.

2.4 TESTS, INSPECTIONS, AND VERIFICATIONS

2.4.1 Sound Transmission Classification

Provide Test reports prepared by a nationally recognized, independent laboratory for Acoustical Tests, Air Infiltration Tests, Wind Loading Tests and Water Leakage Tests indicating that the sound transmission classification (STC) of the proposed door, based on tests at 16 third-octave band frequencies from 125 to 4,000 hertz, is no less than the specified STC when tested in accordance with ASTM E90, and that the door

tested is hung in substantially the type of wall and frame as indicated and is fully operable with hardware and perimeter seals installed.

PART 3 EXECUTION

3.1 PREPARATION

Upon receipt of material, thoroughly inspect all frames, doors and accessories. Verify quantities and tag numbers according to the packing list provided. Report all discrepancies, deficiencies and/or damages immediately to Contracting Officer.

Prior to installation check all doors and frames for correct size and swing. Verify that frames are plumb, square and aligned without twist in accordance with tolerances published by NAAMM/HMMA and SDI.

3.1.1 Frame Painting and Cleaning

Clean thoroughly all surfaces of all mill scale, rust, oil, grease, dirt, and other foreign materials before the application of the shop coat of paint.

Apply one shop coat of rust inhibitive metallic oxide or synthetic resin primer applied to clean, dry, and prepared surfaces by brush, dipping, or other approved method to provide a continuous minimum dry film thickness of 0.9 mil.

3.2 INSTALLATION

3.2.1 Frame

Install frames plumb and true with not more than 1/32-inch deviation in vertical alignment in 8 feet. Anchor to the wall in accordance with the printed instructions of the manufacturer. Grout frames solid with mortar in masonry, concrete, and plaster wall construction. Spot grout frames in dry wall partitions with mortar at the jamb anchor clips; fill the space between metal frame and stud partition solidly with fiberglass or mineral wool insulation.

Field splices may be required after installation because of shipping limitations. Field weld splices by certified welders per manufacturer's instructions and in accordance with AWS D1.3/D1.3M.

3.2.2 Door

Install and adjust all doors, hardware, and seals in accordance with the approved drawings, hardware schedules, and the printed instructions of the door manufacturer.

Install and adjust perimeter seals and automatic door bottom seals to provide positive compression contact with the entire sealing surface with no gaps, openings, or breaks. Hinges or hardware which distort or pinch the perimeter seal during operation of the door will be rejected.

Install door bottom devices to seal the space between the door bottoms and the finished floor and the space between the seal and seal housing.

Field apply perimeter seal housings with mitered corners and with flush, aligned hairline joints.

Install doors and frames in accordance with the approved drawings, hardware schedule, and the printed instructions of the door manufacturer.

Install components to manufacturer's written instructions. Coordinate with masonry and gypsum board wall construction for anchor placement. Set frames plumb, square, level and at correct elevation. Adjust operable parts for correct clearances and function. Install and adjust perimeter and bottom acoustic seals.

3.3 FIELD QUALITY CONTROL

Provide third party testing in accordance with ASTM E336. Verify in writing that installed product performs no less than five (5) ASTC or NIC rating points below the specified laboratory STC rating. Examine, adjust, and retest any installation not meeting that criteria until compliance is obtained.

3.3.1 Testing and Performance

Provide assemblies that are identical to those tested at an independent acoustical laboratory qualified under the National Voluntary Laboratory Accreditation Program (NVLAP) by the National Institute for Science and Technology (NIST) in accordance with ASTM E90 and ASTM E413. On test reports include the laboratory name, test report number and date of test.

-- End of Section --

SECTION 08 45 23.00 22

INSULATED TRANSLUCENT FIBERGLASS SANDWICH PANEL SYSTEM
06/13

PART 1 GENERAL

1.1 REFERENCES

The publications listed below form a part of this specification to the extent referenced. The publications are referred to within the text by the basic designation only.

AMERICAN ARCHITECTURAL MANUFACTURERS ASSOCIATION (AAMA)

AAMA 1503	(2009) Voluntary Test Method for Thermal Transmittance and Condensation Resistance of Windows, Doors and Glazed Wall Sections
AAMA 2604	(2005) Voluntary Specification, Performance Requirements and Test Procedures for High Performance Organic Coatings on Aluminum Extrusions and Panels
AAMA 501.1	(2005) Standard Test Method for Water Penetration of Windows, Curtain Walls and Doors Using Dynamic Pressure

ASTM INTERNATIONAL (ASTM)

ASTM C297/C297M	(2004; R 2010) Flatwise Tensile Strength of Sandwich Constructions
ASTM D1002	(2010) Apparent Shear Strength of Single-Lap-Joint Adhesively Bonded Metal Specimens by Tension Loading (Metal-to-Metal)
ASTM D1037	(2012) Evaluating Properties of Wood-Base Fiber and Particle Panel Materials
ASTM D2244	(2014) Calculation of Color Tolerances and Color Differences from Instrumentally Measured Color Coordinates
ASTM D4060	(2010) Abrasion Resistance of Organic Coatings by the Taber Abraser
ASTM E283	(2004; R 2012) Determining the Rate of Air Leakage Through Exterior Windows, Curtain Walls, and Doors Under Specified Pressure Differences Across the Specimen
ASTM E331	(2000; R 2009) Water Penetration of Exterior Windows, Skylights, Doors, and Curtain Walls by Uniform Static Air Pressure Difference

ASTM E72	(2014a) Conducting Strength Tests of Panels for Building Construction

U.S. DEPARTMENT OF DEFENSE (DOD)

UFC 4-010-01	(2012) DoD Minimum Antiterrorism Standards for Buildings

U.S. GREEN BUILDING COUNCIL (USGBC)

LEED	(2002; R 2005) Leadership in Energy and Environmental Design(tm) Green Building Rating System for New Construction (LEED-NC)

UNDERWRITERS LABORATORIES (UL)

UL 723	(2008; Reprint Aug 2013) Test for Surface Burning Characteristics of Building Materials

1.2 DESCRIPTION OF PANEL SYSTEM

This specification section includes the insulated translucent sandwich panel system as shown and indicated on the drawings. Color and finishes must conform to the Camp Lejeune/Stone Bay BEAP (Base Exterior Architectural Plan) and be selected from the manufacturers standard product finish options. Work includes providing and installing:

a. Flat factory prefabricated structural sandwich panel; insulated translucent, fiberglass reinforced plastic (FRP); Faced Wall panel Roof and Skylight ststme (AC177).

b. Aluminum installation system.

c. Aluminum sill flashing.

1.2.1 Air Infiltration

Air leakage must conform to the limits through the wall assembly area when tested according to ASTM E283.

1.2.2 Water Penetration Under Static Pressure

No water penetration when tested according to ASTM E331.

1.2.3 Water Penetration Under Dynamic Pressure

No evidence of water leakage when tested according to AAMA 501.1.

1.3 SUBMITTALS

Government approval is required for submittals with a "G" designation; submittals not having a "G" designation are for Contractor Quality Control approval. Submit the following in accordance with Section 01 33 00 SUBMITTAL PROCEDURES:

SD-01 Preconstruction Submittals

Submit Documentation for the following items:

Qualification of Manufacturer; G
Qualification of Installation Contractor; G
Sample Warranty; G

SD-02 Shop Drawings

Installation Drawings; G

SD-03 Product Data

Local/Regional Materials; G

Documentation indicating distance between manufacturing facility and the project site. Indicate distance of raw material origin from the project site. Indicate relative dollar value of local/regional materials to total dollar value of products included in project.

LEED Documentation; G

Submit Manufacturer's catalog data for the following items:

Sandwich Panel; G
Closure Materials
Accessories

SD-04 Samples

Submit as required each of the following samples:

Sandwich Panel, 12 inches long by actual panel width; G
Fasteners; G

Color charts and chips; G

Submit manufacturer's color charts and chips, approximately 4 by 4 inches, showing full range of colors, textures and patterns available for panels with factory applied finishes.

SD-05 Design Data

Wind Design Analysis; G

Blast Design Analysis; G

SD-07 Certificates

LEED Documentation; G

Submit certificates for the following items showing conformance with referenced standards contained in this section:

Fasteners; G

SD-08 Manufacturer's Instructions

Include detailed application instructions and standard manufacturer drawings altered as required by these specifications.

Installation of Wall panels; G

SD-09 Manufacturer's Field Reports

Submit 5 bound copies of the Manufacturer's Field Reports; G

SD-11 Closeout Submittals

Local/Regional Materials; (LEED)

LEED documentation relative to local/regional materials credit in accordance with LEED Reference Guide. Include in LEED Documentation Notebook.

Warranty; G

Maintenance Instructions; G

1.4 QUALITY ASSURANCE

1.4.1 Pre-Installation Conference

Upon notification of submittal receipt and approval by the Contracting Officer; and prior to the commencement of the work, the Contractor must attend a pre-installation conference to review the following:

a. Drawings and Specifications.

b. Qualification of Installer.

c. Sustainable acquisition

d. Approved Warranty

e. Sample panels, 28 inches long by 14 inches wide by 4 inches thick

f. Sample metal closure strips, 10 inches long of each type

g. Color charts and chips

h. Coatings and base metal tests, chalking tests

i. Construction schedule, availability of materials, Installer's personnel, equipment and facilities required to progress with the work without delay.

j. Methods and procedures related to installation of panels, including manufacturer's written instructions. Explicitly identify in writing, differences between manufacturer's instructions and the specified requirements.

k. Support conditions for compliance with requirements, including alignment between and attachment to structural members.

l. Flashing, special details, wall penetrations, openings, and condition of other construction that will affect panels.

m. Governing regulations and requirements for insurance, certificates, and tests and inspections if applicable.

1.4.1.1 Installation Drawings

Installation shop drawings for panels, flashing, accessories, and anchorage systems must indicate completely dimensioned structural frame and erection layouts, openings in the wall, special framing details, and construction details at corners, building intersections and flashing, location and type of mastic and metal filler strips.

1.4.1.2 Wind Design Analysis

Wind design analysis must include wall plan delineating dimensions and attachment patterns for each zone. Wind design analysis must be prepared and sealed by a Licensed Engineer in the geographic area where the construction will take place.

1.4.1.2.1 Blast Design Analysis

Submit a design analysis with calculations showing that the design of each unit and its anchorage to the structure meets the minimum antiterrorism standards required by UFC 4-010-01. Calculations or testing data verifying the structural performance of each unit proposed for use shall be prepared and signed by a registered Professional Engineer. All components and anchorage devices to the structure, as determined by the design analysis, shall be reflected in the Installation Drawings

1.4.2 Manufacturer's Technical Representative

The representative must have authorization from manufacturer to approve field changes and be thoroughly familiar with the products and installations in the geographical area where construction will take place.

1.4.3 Qualification of Manufacturer

Material and products shall be manufactured by a company continuously and regularly employed in the manufacture of specified materials for a period of at least ten (10) consecutive years. Provide evidence of those materials being satisfactorily used on at least six (6) projects of similar size, scope, and location. At least three (3) of the projects shall have been in successful use for ten (10) years or longer.

Panel system shall be listed by the International Code Council - Evaluation Service (ICC-ES) which requires quality control inspections and fire, structural, and water infiltration testing of sandwich panel systems by and approved agency.

Quality control inspections and required testing shall be conducted at least once each year and shall include manufacturing facilities, sandwich panel components, and production sandwich panels for conformance with "Acceptance Criteria for Translucent Fiberglass Plastic (FRP) faced panel wall, roof and skylight, (AC-177)" as regulated by the ICC-ES.

The manufacturer shall be responsible for the configuration and fabrication of the complete panel system. Provide structural analysis data signed and sealed by the qualified professional engineer responsible for their

preparation.

Provide evidence that products used within this specification are manufactured in the United States.

1.4.4 Certified Qualification of Installation Contractor

Installation shall be by an experienced installer, which has been in the business of installing specified panel systems for at least five (5) consecutive years and can show evidence of satisfactory completion of projects of similar size, scope, and type.

1.4.5 Single Source

Obtain each type panels, clips, closure materials and other accessories from the standard products of the single source from a single manufacturer to operate as a complete system for the intended use.

1.4.6 Manufacturer's Maintenance Instructions

Provide manufacturer's detailed written instructions including copies of Material Safety Data Sheets for maintenance and repair materials.

1.5 DELIVERY, HANDLING, AND STORAGE

Deliver panel system, components, and materials in manufacturer's standard protective packaging.

Store panels on the long edge, several inches above the ground, blocked and under cover in accordance with manufacturer's storage and handling instructions.

1.6 PROJECT CONDITIONS

1.6.1 Field Measurements

Verify locations of wall framing and opening dimensions by field measurements before panel fabrication and indicate measurements on Shop Drawings.

1.6.2 Weather Limitations

Proceed with installation preparation only when existing and forecasted weather conditions permit Work to proceed without water entering into wall system or building.

1.7 WARRANTY

Submit manufacturer's and installers written warranty agreeing to repair or replace panel system work which fails in materials or workmanship within one (1) year of the date of Government acceptance of the work. Failure of materials or workmanship shall include leakage, excessive deflection of indivdual panels or assembly, discoloration of panels, deterioration of finish on metal in excess of normal weathering and defects in insulated translucent sandwich panels, accessories, fasteners, and other components of the work.

1.8 SUSTAINABLE DESIGN REQUIREMENTS

1.8.1 LEED Documentation

Reporting for LEED Credit MR7: Submit chain-of-custody certification verifying wood products made from certified wood comply with FSC requirements. Include evidence that mill is certified for chain-of-custody by a FSC accredited certification body. Include statement indicating cost for each certified wood product.

Reporting for LEED Credit EQ4.1: Submit manufacturer's product data certifying all adhesive products comply with VOC requirements of South Coast Air Quality Management District (SCAQMD) Rule #1168.

Reporting for LEED Credit EQ4.4: Submit manufacturer's product data certifying all wood panel and wood composite products contain no added urea formaldehyde.

1.8.2 Local/Regional Materials

Use materials or products extracted, harvested, or recovered, as well as manufactured, within a 500 mile radius from the project site, if available from a minimum of three sources. See Section 01 33 29 LEED(tm) DOCUMENTATION for cumulative total local material requirements. Materials may be locally available.

PART 2 PRODUCTS

2.1 SANDWICH PANEL COMPONENTS

Color and finishes must conform to the Camp Lejeune/Stone Bay BEAP (Base Exterior Architectural Plan) and be selected from the manufactures standard product finish options.

Face Sheets:

a. Translucent Faces: Manufactured from glass fiber reinfirced thermoset resins, formulated specifically for architectural use. Thermoplastic (e.g. polycarbonate and acrylic) faces are not acceptable.

b. Flammability of Interior Face Sheets: Underwriters Laboratories (UL) listed, with a flamespread rating no greater than 50 and smoke developed no greater than 250 when tested in accordance with UL 723. Burn extent by ASTM D 635 shall be no greater than 1 inch. Face sheets shall not deform, deflect, or dip when subjected to fire or flame. Face sheets shall not delaminate when exposed to 200 degrees F for 30 minutes per IBC.

c. Weatherability of Exterior Face Sheets:

   1. Color Stability: Full thickness of the exterior face sheet shall not change color more than 3.0 CIE Units DELTA E by ASTM D2244 after five (5) years outdoor North Carolina weathering at 5 degrees facing South, determined by the average of at lease three (3) samples with and without a protective film or coating to ensure long-term color stability. Color stability shall be unafected by abrasion or scratching.

   2. Erosion Barrier: Exterior face shall have a permanent glass

erosion barrier embedded beneath the surface to provide long-term resistamce to reinforcing fiber exposure. Exterior face surface loss shall not exceed 0.7 mils and 40 MGS when tested in accordance with ASTM D4060 employing CS17 abrasive wheels at a head load of 500 grams for 100 cycles. Sacrificial surface films or coatings are not acceptable erosion bariers.

d. Appearance: Exterior face sheets shall be smooth, 0.070 inches thick and white in color. Interior face sheets shall be smooth, 0.045 inches thick and white in color. Face sheets shall not vary more than +/- 10 percent in thickness and be uniform in color.

e. Strength: Exterior face sheet shall be uniform in strength, impenetrable by hand held pencil and repel an impact equal large missle "D" by ASTM E1996 when laminated to the panel grid core.

Grid Core:

a. Thermally broken aluminum I-beam core shall be of 6063-T6 or 6005-T5 alloy and temper with provisions for mechanical interlocking of muntin-mullion and perimeter. Width of I-beam shall be no less than 7/16 inch. The I-beam grid shall be machined to tolerances of not greater than +/- 0.002 inches. Thermal break shall be 1 inch minimum.

Laminate Adhesive:

a. Heat and pressure resin type adhesive engineered for structural sandwich panel use, with minimum 25 years field use. Adhesive shall pass testing requirements specified by the International Code Council "Acceptance Criteria for Sandwich Panel Adhesives".

b. Minimum tensile strength of 750 PSI when the panel assembly is tested by ASTM C297/C297M after two (2) exposures to six (6) cycles each of the aging conditions prescribed by ASTM D1037.

c. Minimum shear strength of the panel adhesive by ASTM D1002 after exposure to five (5) separate conditions:

1. 50 percent relative humidity at 73 degrees F: 540 PSI.

2. 182 degrees F: 100 PSI.

3. Accelerated aging by ASTM D1037 at room temperature: 800 PSI.

4. Accelerated aging by ASTM D1037 at 182 degrees F: 250 PSI.

2.2 PANEL CONSTRUCTION

Provide sandwich panels of flat fiberglass reinforced translucent face sheets laminated to a grid core of mechanically interlocking, thermally broken (aluminum) I-beams. The adhesive bonding line shall be straight, cover the entire width of the I-beam, and have a neat sharp edge.

a. Thickness: 2-3/4 inches.

b. Light transmission: 20 percent, minimum

c. Solar heat gain coefficient: 0.28 maximum

d. U-Factor by NFRC certified laboratory: 0.23 thermally broken.

e. Grid pattern: long axis horizontal.

Panels shall deflect no more than 1.9 inches at 30 psf in ten foot span without a supporting frame by ASTM E72.

Panels shall withstand 1200 degrees F fire for minimum one (1) hoour without collapse of exterior framing.

Thermally Broken Panels: Minimum condensation resistance factor (CRF) of 85 by AAMA 1503 measured on the bond line.

Panels shall demonstrate performance equivalent to Standard 1 under blast loading as specified in UFC 4-010-01.

2.3 BATTENS AND PERIMETER CLOSURE SYSTEM

Closure system shall be extruded aluminum 6063-T6 and 6063-T5 alloy and temper clamp-tite screw type closure system. Thermally broken perimeter system shall have a urethane bridge. Curved closure system may be roll formed.

Sealing tape or gasket shall be manufacturer's standard, pre-applied to closure system at the factory under controlled conditions.

Fasteners shall be 300 series stainless steel screws for aluminum closures, excluding final fasteners to the building.

Finish of exposed aluminum shall be manufacturer's factory applied finish that meets the performance requirements of AAMA 2604. Color to be selected from manufacturer's standard colors.

PART 3 EXECUTION

3.1 EXAMINATION

Examine substrates, supporting structure, and installation conditions. Do not proceed with panel erection until unsatisfactory conditions have been corrected.

3.2 PREPARATION

Metal Protection:

a. Where aluminum will contact dissimilar metals, protect against galvanic action by painting contact surfaces with primer or by applying sealant or tape recommended by the manufacturer for this purpose.

b. where aluminum will contact contrete or masonry, protect against corrosion by painting contact surfaces with bituminus paint or method recommended by manufacturer.

c. Where aluminum will contact pressure-treated wood, separate dissimilar materials by methods recommended by manufacturer.

3.3 INSTALLATION

Install the panel system in accordance with the manufacturer's installation

recommendations and approved shop drawings. Anchor component parts securely in place by permanent mechanical attachment system. Accommodate thermal and mechanical movements. Set perimeter framing in a full bed of sealant compound, or with joint fillers or gaskets to provide weather-tight construction.

Install joint sealants at perimeter joints and within the panel system in accordance with manufacturer's installation instructions.

3.4 FIELD QUALITY CONTROL

3.4.1 Construction Monitoring

Make visual inspections as necessary to ensure compliance with specified requirements. Additionally, verify the following:

a. Materials comply with the specified requirements.

b. All materials are properly stored, handled and protected from damage. Damaged materials are removed from the site.

c. Framing and substrates are in acceptable condition, in compliance with specification, prior to application of panels.

d. The proper number, type, and spacing of attachment clips and fasteners are installed.

e. Installer adheres to specified and detailed application parameters.

f. Associated flashing and sheet metal are installed in a timely manner in accord with the specified requirements.

Provide five bound copies of Manufacturer's Field Reports to the Contracting Officer two weeks prior to project close-out.

3.5 CLEAN-UP AND DISPOSAL

Clean the panel system inside and outside, immediately after installation, according to manufacturer,s written recommendations.

-- End of Section --

SECTION 08 71 00

DOOR HARDWARE
08/08

PART 1 GENERAL

1.1 REFERENCES

The publications listed below form a part of this specification to the extent referenced. The publications are referred to in the text by the basic designation only.

ASTM INTERNATIONAL (ASTM)

ASTM E283	(2004; R 2012) Determining the Rate of Air Leakage Through Exterior Windows, Curtain Walls, and Doors Under Specified Pressure Differences Across the Specimen
ASTM F883	(2013) Padlocks

BUILDERS HARDWARE MANUFACTURERS ASSOCIATION (BHMA)

ANSI/BHMA A156.1	(2013) Butts and Hinges
ANSI/BHMA A156.13	(2012) Mortise Locks & Latches Series 1000
ANSI/BHMA A156.16	(2013) Auxiliary Hardware
ANSI/BHMA A156.17	(2004; R 2010) Self Closing Hinges & Pivots
ANSI/BHMA A156.18	(2012) Materials and Finishes
ANSI/BHMA A156.2	(2011) Bored and Preassembled Locks and Latches
ANSI/BHMA A156.21	(2009) Thresholds
ANSI/BHMA A156.3	(2008) Exit Devices
ANSI/BHMA A156.4	(2013) Door Controls - Closers
ANSI/BHMA A156.5	(2010) Auxiliary Locks and Associated Products
ANSI/BHMA A156.6	(2010) Architectural Door Trim
ANSI/BHMA A156.7	(2003; R 2009) Template Hinge Dimensions
ANSI/BHMA A156.8	(2010) Door Controls - Overhead Stops and Holders
BHMA A156.15	(2011) Release Devices Closer Holder, Electromagnetic and Electromechanical
BHMA A156.22	(2012) Door Gasketing and Edge Seal Systems

NATIONAL FIRE PROTECTION ASSOCIATION (NFPA)

NFPA 101	(2015; ERTA 2015) Life Safety Code
NFPA 80	(2013) Standard for Fire Doors and Other Opening Protectives

STEEL DOOR INSTITUTE (SDI/DOOR)

SDI/DOOR A250.8	(2003; R2008) Recommended Specifications for Standard Steel Doors and Frames

U.S. GENERAL SERVICES ADMINISTRATION (GSA)

FS FF-L-2740B	(2011; Amendment 1 2012) Locks, Combination, Electromechanical

UNDERWRITERS LABORATORIES (UL)

UL Bld Mat Dir	(2012) Building Materials Directory

1.2 SUBMITTALS

Submit the following in accordance with Section 01 33 00 SUBMITTAL PROCEDURES.

SD-02 Shop Drawings

Hardware schedule; G

Keying system

SD-03 Product Data

Hardware items; G

SD-08 Manufacturer's Instructions

Installation

SD-10 Operation and Maintenance Data

Hardware Schedule items, Data Package 1;

Submit data package in accordance with Section 01 78 23 OPERATION AND MAINTENANCE DATA.

SD-11 Closeout Submittals

Key Bitting

1.3 HARDWARE SCHEDULE

Prepare and submit hardware schedule in the following form:

Hardware Item	Quantity	Size	Reference Publication Type No.	Finish	Mfr Name and Catalog No.	Key Control Symbols	UL Mark (If fire rated and listed	BHMA Finish Designation

1.4 KEY BITTING CHART REQUIREMENTS

Submit key bitting charts to the Contracting Officer prior to completion of the work. Include:

a. Complete listing of all keys (AA1, AA2, etc.).

b. Complete listing of all key cuts (AA1-123456, AA2-123458).

c. Tabulation showing which key fits which door.

d. Copy of floor plan showing doors and door numbers.

e. Listing of 20 percent more key cuts than are presently required in each master system.

1.5 QUALITY ASSURANCE

1.5.1 Hardware Manufacturers and Modifications

Provide, as far as feasible, locks, hinges, pivots, and closers of one lock, hinge, pivot, or closer manufacturer's make. Modify hardware as necessary to provide features indicated or specified.

1.5.2 Key Shop Drawings Coordination Meeting

Prior to the submission of the key shop drawing, the Contracting Officer, Contractor, Door Hardware subcontractor, using Activity and Base Locksmith shall meet to discuss key requirements for the facility.

1.5.2.1 Electronic Security Hardware Walk-Thru

Prior to installation of door control conduit the Contracting Officer, Contractor, Door Hardware subcontractor, using Activity and Base Locksmith, shall conduct a walk-thru to confirm the exact location of the conduit and junction boxes that will service the electronically secured doors. Particular attention shall be paid to the exact location of Card Reader junction boxes for doors located in corridors to ensure the Card Reader is not obscured by an open door.

1.6 DELIVERY, STORAGE, AND HANDLING

Deliver hardware in original individual containers, complete with necessary appurtenances including fasteners and instructions. Mark each individual container with item number as shown in hardware schedule. Deliver permanent keys and removable cores to the Contracting Officer, either directly or by certified mail. Deliver construction master keys with the locks.

1.7 ELECTRONIC SECURITY HARDWARE

The following Electronic Security Hardware will be provided and installed by the owner: card readers and position switches.
The GC shall provide conduit and conductors as required for installation of these devices.

1.7.1 Federal Specifications

Installation of all electronic security door hardware shall comply with FS FF-L-2740B.

PART 2 PRODUCTS

2.1 TEMPLATE HARDWARE

Provide hardware to be applied to metal or to prefinished doors manufactured to template. Promptly furnish template information or templates to door and frame manufacturers. Conform to ANSI/BHMA A156.7 for template hinges. Coordinate hardware items to prevent interference with other hardware.

2.2 HARDWARE FOR FIRE DOORS AND EXIT DOORS

Provide all hardware necessary to meet the requirements of NFPA 80 for fire doors and NFPA 101 for exit doors, as well as to other requirements indicated, even if such hardware is not specifically mentioned under paragraph entitled "Hardware Schedule." Provide the label of Underwriters Laboratories, Inc. for such hardware listed in UL Bld Mat Dir or labeled and listed by another testing laboratory acceptable to the Contracting Officer.

2.3 HARDWARE ITEMS

Clearly and permanently mark with the manufacturer's name or trademark, hinges, pivots, locks, latches, exit devices, bolts and closers where the identifying mark will be visible after the item is installed. For closers with covers, the name or trademark may be beneath the cover.

2.3.1 Hinges

ANSI/BHMA A156.1, 4-1/2 by 4-1/2 inch unless otherwise indicated. Construct loose pin hinges for exterior doors and reverse-bevel interior doors so that pins will be nonremovable when door is closed. Other antifriction bearing hinges may be provided in lieu of ball-bearing hinges.

2.3.2 Pivots

ANSI/BHMA A156.4.

2.3.3 Spring Hinges

ANSI/BHMA A156.17.

2.3.4 Locks and Latches

2.3.4.1 Mortise Locks and Latches

ANSI/BHMA A156.13, Series 1000, Operational Grade 1, Security Grade 2. Provide mortise locks with escutcheons not less than 7 by 2-1/4 inch with a bushing at least 1/4 inch long. Cut escutcheons to suit cylinders and provide trim items with straight, beveled, or smoothly rounded sides, corners, and edges. Install knobs and roses of mortise locks with screwless shanks and no exposed screws.

2.3.4.2 Bored Locks and Latches

ANSI/BHMA A156.2, Series 4000, Grade 1.

2.3.4.3 Auxiliary Locks

ANSI/BHMA A156.5, Grade 1.

2.3.4.4 Key Card System

Provide conduit and conductors as required to service the following card key type system and Cipher Locks: lithium battery powered, magnetic stripe keycard locksets that are ANSI/BHMA A156.13, Series 1000, Grade 1, mortise or ANSI/BHMA A156.2, Series 4000, Grade 1, cylindrical locks, tamper resistant, UL listed with 1 inch throw deadbolt, 3/4-inch throw latch bolt, auxiliary deadlocking latch, and 2-3/4 inch backset. The latch bolt and the dead bolt shall be operated simultaneously by rotating inside lever. Locks with mechanical override lock cylinders are not acceptable. Locks shall be operated only by a correctly encoded keycard. At double doors coordinate the location of the Card Reader so that it is adjacent to the active door. The card reader device will be provided and installed by the Government.

2.3.4.5 High Security Lock

Provide KABA MAS model FF-L-2749A X 09 OR CDX -09, heavy duty ,combination electromechnaical deadbolt locks for pedestrian doors. Provide a drill resistant dial ring mounting plate, 2-3/4 inch back-set, with automatic lock reset,high security combination scramble, and resistant to all forms of external manupulation and environmental attack. Verify the necessary modes of operation.

1. Single combination mode
2. Dual combination mode
3. Supervisor/Subordinate mode

2.3.5 Exit Devices

ANSI/BHMA A156.3, Grade 1. Provide adjustable strikes for rim type and vertical rod devices. Provide open back strikes for pairs of doors with mortise and vertical rod devices. Provide touch bars at solid door slabs; provide conventional crossbars and arms at glazed aluminum storefront doors.Provide escutcheons, not less than 7 by 2-1/4 inch.

a. Electronic Exit Devices at doors with electromagnetic lock shall be delayed egress type.

2.3.6 Cylinders and Cores

All cylindrical locks shall have interchangeable cores by Best Lock Corp., Arrow Lock Corp., Falcon Lock, or Eagle. Provide cylinders for new locks, including locks provided under other sections of this specification. Provide fully compatible cylinders with interchangeable cores which are removable by a special control key. Factory set the cores with seven pin tumblers. Provide cylinders from products of one manufacturer, and provide cores from the products of one manufacturer. Submit a core code sheet with the cores. Stamp each interchangeable core with a key control symbol in a concealed place on the core.

2.3.7 Electric Strikes

Government will provide and install the electric strikes at doors as scheduled; Contractor will provide conduit and conductors as required to service electric strike; 6200 Series by Von Duprin. Contractor shall provide strike plates so that door is operational until electric strikes are installed.

2.3.8 Electromagneitc Locks

Provide the following electromagnetic locks: 350 Narrow Line Magnetic Door Lock by SDC; surface mounted; 1200 lbs holding force; unit shall have intragal magnetic bond sensor and door status sensor and LED Status indicator.

2.3.9 Keying System

Provide a grand master keying system Provide construction interchangeable cores as described above in Cylinders and Cores.

Provide sub-master keying system for each building, and keyed to the existing Best removable-core master and grand master keying systems. Key equipment spaces and mechanical rooms separately from the building systems, and keyed alike to the existing Best master and grand master systems for these doors.

2.3.10 Lock Trim

Cast, forged, or heavy wrought construction and commercial plain design.

2.3.10.1 Lever Handles

Provide lever handles in lieu of knobs where indicated in paragraph entitled "Hardware Schedule". Conform to the minimum requirements of ANSI/BHMA A156.13 for mortise locks of lever handles for exit devices. Provide lever handle locks with a breakaway feature (such as a weakened spindle or a shear key) to prevent irreparable damage to the lock when force in excess of that specified in ANSI/BHMA A156.13 is applied to the lever handle. Provide lever handles return to within 1/2 inch of the door face.

2.3.10.2 Texture

Provide knurled or abrasive coated knobs or lever handles for doors which are accessible to blind persons and which lead to dangerous areas.

2.3.11 Keys

Furnish one file key, one duplicate key, and one working key for each key change and for each master and grand master keying system. Furnish one additional working key for each lock of each keyed-alike group. Stamp each key with appropriate key control symbol and "U.S. property - Do not duplicate." Do not place room number on keys. Keying to be coordinated with Government.

2.3.12 Door Bolts

ANSI/BHMA A156.16. Provide dustproof strikes for bottom bolts, except for doors having metal thresholds. Automatic latching flush bolts: ANSI/BHMA A156.3, Type 25.

2.3.13 Closers

ANSI/BHMA A156.4, Series C02000, Grade 1, with PT 4C. Provide with brackets, arms, mounting devices, fasteners, full size covers and other features necessary for the particular application. Provide manufacturer's 10 year warranty.

2.3.13.1 Identification Marking

Engrave each closer with manufacturer's name or trademark, date of manufacture, and manufacturer's size designation located to be visible after installation.

2.3.14 Overhead Holders

ANSI/BHMA A156.8. Surfaced mounted type; hollow metal doors and frames must be reinforced to provide necessary strengh for the holder.

2.3.15 Closer Holder-Release Devices

BHMA A156.15.

2.3.16 Door Protection Plates

ANSI/BHMA A156.6.

2.3.16.1 Sizes of Mop and Kick Plates

2 inch less than door width for single doors; one inch less than door width for pairs of doors. Provide 10 inch kick plates for flush doors and 1 inch less than height of bottom rail for panel doors. Provide 6 inch mop plates.

2.3.17 Door Stops and Silencers

ANSI/BHMA A156.16. Silencers Type L03011. Provide three silencers for each single door, two for each pair.

2.3.18 Padlocks

ASTM F883.

2.3.19 Thresholds

ANSI/BHMA A156.21. Use J35100, with vinyl or silicone rubber insert in face of stop, for exterior doors opening out, unless specified otherwise. For interior doors provided as scheduled. All threshold must maintain accessibility requirements. Review all building threshold requiremtns and door sill elevation details. For those doors recieving door bolts coordinate location of hole in threshold to receive door bolt.

2.3.20 Weather Stripping Gasketing

BHMA A156.22. Provide the type and function designation where specified in paragraph entitled "Hardware Schedule". Provide a set to include head and jamb seals, sweep strips, and, for pairs of doors, astragals. Air leakage of weather stripped doors not to exceed 0.5 cubic feet per minute of air per square foot of door area when tested in accordance with ASTM E283. Provide weather stripping with one of the following:

2.3.20.1 Extruded Aluminum Retainers

Extruded aluminum retainers not less than 0.050 inch wall thickness with vinyl, neoprene, silicone rubber, or polyurethane inserts. Provide anodized aluminum finish to match match door..

2.3.20.2 Interlocking Type

Zinc or bronze not less than 0.018 inch thick.

2.3.20.3 Spring Tension Type

Spring bronze or stainless steel not less than 0.008 inch thick.

2.3.21 Lightproofing and Soundproofing Gasketing

BHMA A156.22. Include adjustable doorstops at head and jambs and an automatic door bottom per set, both of extruded aluminum, clear (natural) anodized, surface applied, with vinyl fin seals between plunger and housing. Provide doorstops with solid neoprene tube, silicone rubber, or closed-cell sponge gasket. Furnish door bottoms with adjustable operating rod and silicone rubber or closed-cell sponge neoprene gasket. Doorstops mitered at corners. Provide the type and function designation where specified in paragraph entitled "Hardware Sets".

2.3.22 Rain Drips

Extruded aluminum, not less than 0.08 inch thick, color / finish to match door frame. Set drips in sealant and fasten with stainless steel screws. For all exterior doors that open to the outside, where the door swing area is not covered by an overhang, provided top and bottom rain drips complying with ANSI R3Y535 as a minimum. Greater weathersealing may be required by the geographic location of the project.

2.3.22.1 Door Rain Drips

Approximately 1-1/2 inch high by 5/8 inch projection. Align bottom with bottom edge of door.

2.3.22.2 Overhead Rain Drips

Approximately 1-1/2 inch high by 2-1/2 inch projection, with length equal to overall width of door frame. Align bottom with door frame rabbet.

2.3.23 Special Tools

Provide special tools, such as spanner and socket wrenches and dogging keys, required to service and adjust hardware items.

2.4 FASTENERS

Provide fasteners of proper type, quality, size, quantity, and finish with hardware. Provide stainless steel or nonferrous metal fasteners that are exposed to weather. Provide fasteners of type necessary to accomplish a permanent installation. Self-Tapping and/or self-drilling screws are not permitted and shall be removed and replaced if installed.

2.5 KNOX BOX

Knox boxes are Government furnished/Contrator installed. Camp Lejeune Fire/EMS will provide a Knox boxes for all buildings. They are to be located near the front door of the structure.

Contact: Nancy Reesman, Building 58, Camp Lejuene. Work: 910-451-7109; Exact location and mounting height of box as directed by this office.

2.6 FINISHES

ANSI/BHMA A156.18. Provide hardware in BHMA 630 finish (satin stainless steel), unless specified otherwise. Provide items not manufactured in stainless steel in BHMA 626 finish (satin chromium plated) over brass or bronze, except aluminum paint finish for surface door closers, and except BHMA 652 finish (satin chromium plated) for steel hinges. Provide hinges for exterior doors in stainless steel with BHMA 630 finish or chromium plated brass or bronze with BHMA 626 finish. Furnish exit devices in BHMA 626 finish in lieu of BHMA 630 finish except where BHMA 630 is specified under paragraph entitled "Hardware Sets". Match exposed parts of concealed closers to lock and door trim. Match hardware finish for aluminum doors to the doors.

2.7 KEY CABINET AND CONTROL SYSTEM

ANSI/BHMA A156.5, Type required to yield a capacity (number of hooks) 25 percent greater than the number of key changes used for door locks. Provide a key cabinet for each building.

PART 3 EXECUTION

3.1 INSTALLATION

Install hardware in accordance with manufacturers' printed installation instructions. Fasten hardware to wood surfaces with full-threaded wood screws or sheet metal screws. Provide machine screws set in expansion shields for fastening hardware to solid concrete and masonry surfaces. Provide toggle bolts where required for fastening to hollow core construction. Provide through bolts where necessary for satisfactory installation.

3.1.1 Weather Stripping Installation

Handle and install weather stripping to prevent damage. Provide full contact, weather-tight seals. Operate doors without binding.

3.1.1.1 Stop-Applied Weather Stripping

Fasten in place with color-matched sheet metal screws not more than 9 inch on center after doors and frames have been finish painted.

3.1.1.2 Interlocking Type Weather Stripping

Provide interlocking, self-adjusting type on heads and jambs and flexible hook type at sills. Nail weather stripping to door 1 inch on center and to heads and jambs at 4 inch on center

3.1.1.3 Spring Tension Type Weather Stripping

Provide spring tension type on heads and jambs. Provide bronze nails with bronze, stainless steel nails with stainless steel. Space nails not more than 1-1/2 inch on center.

3.1.2 Lightproofing and Soundproofing Installation

Install as specified for stop-applied weather stripping.

3.1.3 Threshold Installation

Extend thresholds the full width of the opening and notch end for jamb stops. Set thresholds in a full bed of sealant and anchor to floor with cadmium-plated, countersunk, steel screws in expansion sleeves.

3.2 FIRE DOORS AND EXIT DOORS

Install hardware in accordance with NFPA 80 for fire doors, NFPA 101 for exit doors.

3.3 HARDWARE LOCATIONS

SDI/DOOR A250.8, unless indicated or specified otherwise.

a. Kick and Armor Plates: Push side of single-acting doors. Both sides of double-acting doors.

b. Mop Plates: Bottom flush with bottom of door.

3.4 KEY CABINET AND CONTROL SYSTEM

Locate where directed. Tag one set of file keys and one set of duplicate keys. Place other keys in appropriately marked envelopes, or tag each key. Furnish complete instructions for setup and use of key control system. On tags and envelopes, indicate door and room numbers or master or grand master key.

3.5 FIELD QUALITY CONTROL

After installation, protect hardware from paint, stains, blemishes, and other damage until acceptance of work. Submit notice of testing 15 days before scheduled, so that testing can be witnessed by the Contracting

Officer. Adjust hinges, locks, latches, bolts, holders, closers, and other items to operate properly. Demonstrate that permanent keys operate respective locks, and give keys to the Contracting Officer. Correct, repair, and finish, as directed, errors in cutting and fitting and damage to adjoining work.

3.6 HARDWARE SETS

Provide hardware keying compatible with the existing base-wide keying system. Deliver Hardware templates and hardware, except field-applied hardware to the aluminum door and frame manufacturer for use in fabricating the doors and frames.

Hardware supplier shall reference architectural plans to determine door "handness" of each door when specifying hardware.

3.6.1 **Hardware Set Schedule**

HW-1A (EXTERIOR HIGH SECURITY DOOR SINGLE ACCESSED CONTROLLED)

3 EA. Tamper Resistant Hinges
1EA Access Control Mortise
(similar to KABA-MAS CDX -09
with push bar exit device
1 EA Position Switch

1 EA Heavy duty closer	push side
1 EA Electrified Door Contacts	Sentrol 2757/2767 Series
2 EA Card Reader	Non Secure and Secure side (BY OTHERS)
1 Pull	door manufacturer standard
1 SET Acoustical Door Assembly	door manufacturer standard

HW-2A (EXTERIOR DOOR EGRESS ONLY ACCESS-CONTROLLED

3 EA. Tamper Resitant Hinges	
1 Exit Device	Panic Device, rim type
1 EA Electrified Door Contacts	6200 Series by Von Duprin (BY OTHERS)
2 EA Card Reader	Non Secure and Secure side (BY OTHERS)
1 EA Heavy Duty Closer	push side
1 SET Acoustical Door Assembly	door manufacturer standard

Note: Door to be be prepared to receive electronic hardware at a future date; provide conduit / conductors as required for interior and exterior card readers and magnetic lock and high security exterior combination lock.

Interior Doors

HW-3A (323A) ENTRY (ACCESS-CONTROLLED)

1 EA. Mortise Lockset	
3 EA. Tamper Resitant Hinges	
1 EA Electrified Door Contacts	6200 Series by Von Duprin (BY OTHERS)
1 EA.Card Reader	on entry side (BY OTHERS)
1 EA Door Stop	
1 EA. O/H Closer	

HW-4A (337) TELECOM ROOM (ACCESS-CONTROLLED)

1 EA. Mortise Lockset with Lever
3 EA. Tamper Resistant Hinges
1 EA Electrified Door Contact 6200 Series by Von Duprin (BY OTHERS)
1 EA Card Reader outside face (BY OTHERS)
1 EA Door Stop
1 EA Closer parrallel arm

HW-11 (332,331) TOILET ROOMS

3EA. Hinges
1 EA. Privacy Lockset
1 EA. Door Stop
1 EA Closer, parallel arm
1 EA. Coat Hook

HW-14 (324,325) OFFICES

3 EA. Hinges
1 EA. Mortise Lock Office Function
1 EA. Closer, HD Regular Arm
1 EA. Door Stop

HW-15 (341,329,330)TEAM ROOMS

3 EA Hinges
1 EA. Mortise Lock Office Function
1 EA. Closer, HD Parallel Arm
1 EA. Door Stop

HW-16 (338) MULTI-PURPOSE ROOM

3 EA. Tamper Resistant Hinges
1 EA. Mortise Lock Office Function
1 SET Acoustical Door Assembly door manufacturer standard

HW-17 (339) STORAGE

3 EA. Hinges
1 EA. Lockset Store Room Function
1 EA. Door Stop

HW-18 (333,326,327,340) STORAGE AND ELECTRICAL

3 EA. Hinges
1 EA. Lockset Store Room Function
1 EA. Door Stop as required

HW-19 (328) BREAK ROOM

3 EA. Hinges
1 EA. lockset, office function
1 EA Door Stop
1 EA. Closer

-- End of Section --

SECTION 08 81 00

GLAZING
08/11

PART 1 GENERAL

1.1 REFERENCES

The publications listed below form a part of this specification to the extent referenced. The publications are referred to within the text by the basic designation only.

AMERICAN NATIONAL STANDARDS INSTITUTE (ANSI)

ANSI Z97.1	(2009; Errata 2010) Safety Glazing Materials Used in Buildings - Safety Performance Specifications and Methods of Test

AMERICAN SOCIETY OF CIVIL ENGINEERS (ASCE)

ASCE/SEI 7-05	(2006) Minimum Design Loads for Buildings and Other Structures

ASTM INTERNATIONAL (ASTM)

ASTM C1036	(2010; E 2012) Standard Specification for Flat Glass
ASTM C1048	(2012; E 2012) Standard Specification for Heat-Treated Flat Glass - Kind HS, Kind FT Coated and Uncoated Glass
ASTM C1172	(2009; E 2011) Standard Specification for Laminated Architectural Flat Glass
ASTM C1184	(2013) Standard Specification for Structural Silicone Sealants
ASTM C509	(2006; R 2011) Elastomeric Cellular Preformed Gasket and Sealing Material
ASTM C864	(2005; R 2011) Dense Elastomeric Compression Seal Gaskets, Setting Blocks, and Spacers
ASTM C920	(2014a) Standard Specification for Elastomeric Joint Sealants
ASTM D2287	(2012) Nonrigid Vinyl Chloride Polymer and Copolymer Molding and Extrusion Compounds
ASTM D395	(2003; R 2008) Standard Test Methods for Rubber Property - Compression Set
ASTM E1300	(2012a; E 2012) Determining Load Resistance of Glass in Buildings

ASTM E1886	(2013a) Standard Test Method for Performance of Exterior Windows, Curtain Walls, Doors, and Impact Protective Systems Impacted by Missile(s) and Exposed to Cyclic Pressure Differentials
ASTM E1996	(2014) Standard Specification for Performance of Exterior Windows, Curtain Walls, Doors, and Impact Protective Systems Impacted by Windborne Debris in Hurricanes
ASTM E413	(2010) Rating Sound Insulation
ASTM E90	(2009) Standard Test Method for Laboratory Measurement of Airborne Sound Transmission Loss of Building Partitions and Elements
ASTM F1642	(2012) Standard Test Method for Glazing and Glazing Systems Subject to Airblast Loadings
ASTM F2248	(2012) Standard Practice for Specifying an Equivalent 3-Second Duration Design Loading for Blast Resistant Glazing Fabricated with Laminated Glass

GLASS ASSOCIATION OF NORTH AMERICA (GANA)

GANA Glazing Manual	(2004) Glazing Manual
GANA Sealant Manual	(2008) Sealant Manual

INSULATING GLASS MANUFACTURERS ALLIANCE (IGMA)

IGMA TB-3001	(2001) Guidelines for Sloped Glazing
IGMA TM-3000	(1990; R 2004) North American Glazing Guidelines for Sealed Insulating Glass Units for Commercial & Residential Use
IGMA TR-1200	(1983; R 2007) Guidelines for Commercial Insulating Glass Dimensional Tolerances

INTERNATIONAL CODE COUNCIL (ICC)

ICC IBC	(2012) International Building Code

NATIONAL FENESTRATION RATING COUNCIL (NFRC)

NFRC 100	(2010) Procedure for Determining Fenestration Product U-Factors
NFRC 200	(2010) Procedure for Determining Fenestration Product Solar Heat Gain Coefficient and Visible Transmittance at Normal Incidence

NATIONAL FIRE PROTECTION ASSOCIATION (NFPA)

NFPA 80	(2013) Standard for Fire Doors and Other Opening Protectives

U.S. DEPARTMENT OF DEFENSE (DOD)

UFC 4-010-01	(2012) DoD Minimum Antiterrorism Standards for Buildings

U.S. ENVIRONMENTAL PROTECTION AGENCY (EPA)

Energy Star	(1992; R 2006) Energy Star Energy Efficiency Labeling System (FEMP)

U.S. GREEN BUILDING COUNCIL (USGBC)

LEED NC	(2009) Leadership in Energy and Environmental Design(tm) New Construction Rating System

U.S. NATIONAL ARCHIVES AND RECORDS ADMINISTRATION (NARA)

16 CFR 1201	Safety Standard for Architectural Glazing Materials

1.2 PERFORMANCE REQUIREMENTS

1.2.1 Minimum ATFP Performance Criteria for Glazing and Glazing Assemblies

Glazing, windows, doors with windows, framing assemblies, connections, and supporting structural elements shall meet the minimum antiterrorism performance criteria specified in UFC 4-010-01.

1.2.2 Minimum Hurricane Performance Criteria for Glazing and Glazing Assemblies

All exterior glazing, windows, doors with windows, framing assemblies, connections, and supporting structural elements shall meet impact resistance for hurricane wind-borne debris design based on the ICC IBC International Building Code, and ASCE/SEI 7-05 in accordance with ASTM E1886 and ASTM E1996.

1.3 SUBMITTALS

Government approval is required for submittals with a "G" designation; submittals not having a "G" designation are for Contractor Quality Control approval. The following shall be submitted in accordance with Section 01 33 00 SUBMITTAL PROCEDURES:

SD-02 Shop Drawings

Installation

Drawings showing complete details of the proposed setting methods, mullion details, edge blocking, size of openings, frame details, materials, and types and thickness of glass.

SD-03 Product Data

Insulating Glass; G

Documentation for Energy Star qualifications.

Glazing Accessories

Manufacturer's descriptive product data, handling and storage recommendations, installation instructions, and cleaning instructions.

Local/Regional Materials; (LEED NC)

Documentation indicating distance between manufacturing facility and the project site. Indicate distance of raw material origin from the project site. Indicate relative dollar value of local/regional materials to total dollar value of products included in project.

SD-04 Samples

Two 8 by 10 inch samples of the following glass:

Insulating Glass

Glazing Tape

Sealant

SD-07 Certificates

Insulating Glass

Certificates stating that the glass meets the specified requirements. Labels or manufacturers marking affixed to the glass will be accepted in lieu of certificates.

SD-08 Manufacturer's Instructions

Setting and sealing materials

Glass setting

Submit glass manufacturer's recommendations for setting and sealing materials and for installation of each type of glazing material specified.

SD-11 Closeout Submittals

Local/Regional Materials; LEED NC

LEED (tm) documentation relative to local/regional materials credit in accordance with LEED Reference Guide. Include in LEED Documentation Notebook.

1.4 SYSTEM DESCRIPTION

Glazing systems shall be fabricated and installed watertight and airtight to withstand thermal movement and wind loading without glass breakage,

gasket failure, deterioration of glazing accessories, and defects in the work. Glazed panels shall comply with the safety standards, as indicated in accordance with ANSI Z97.1. Glazed panels shall comply with indicated hurrican windborne debris resistance loading in accordance with ASTM E1996.Glazed panels shall comply with indicated wind/snow loading in accordance with ASTM E1300.

1.5 DELIVERY, STORAGE, AND HANDLING

Deliver products to the site in unopened containers, labeled plainly with manufacturers' names and brands. Store glass and setting materials in safe, enclosed dry locations and do not unpack until needed for installation. Handle and install materials in a manner that will protect them from damage.

1.6 ENVIRONMENTAL REQUIREMENTS

Do not start glazing work until the outdoor temperature is above40 degrees F and rising, unless procedures recommended by the glass manufacturer and approved by the Contracting Officer are made to warm the glass and rabbet surfaces. Provide ventilation to prevent condensation of moisture on glazing work during installation. Do not perform glazing work during damp or rainy weather.

1.7 SUSTAINABLE DESIGN REQUIREMENTS

1.7.1 Local/Regional Materials

Use materials or products extracted, harvested, or recovered, as well as manufactured, within a 500 mile radius from the project site, if available from a minimum of three sources. See Section 01 33 29 LEED(tm) DOCUMENTATION for cumulative total local material requirements. Glazing materials may be locally available.

1.8 WARRANTY

1.8.1 Warranty for Insulating Glass Units

Warranty insulating glass units against development of material obstruction to vision (such as dust, fogging, or film formation on the inner glass surfaces) caused by failure of the hermetic seal, other than through glass breakage, for a 10-year period following acceptance of the work. Provide new units for any units failing to comply with terms of this warranty within 45 working days after receipt of notice from the Government.

1.9 COORDINATION WITH ALUMINUM STOREFRONT WINDOW REQUIREMENTS

Exact glass thickness and types shall be as necessary to resist windloads and windborne debris as specified under Section 08 81 00 GLAZING.

PART 2 PRODUCTS

2.1 GLASS

ASTM C1036, unless specified otherwise. In doors and sidelights, provide safety glazing material conforming to 16 CFR 1201.

2.1.1 Clear Glass

Type I, Class 1 (clear), Quality q3. Provide for glazing openings not indicated or specified otherwise. Use double-strength sheet glass or 1/8 inch float glass for openings up to and including 15 square feet, 3/16 inch for glazing openings over 15 square feet but not over 30 square feet, and 1/4 inch for glazing openings over 30 square feet but not over 45 square feet.

2.1.2 Annealed Glass

Annealed glass shall be Type I transparent flat type, Class 1 - clear or tinted as indicated in window glass descriptions below, Quality q3. SHGC as required to achieve value as noted below in paragraph, INSULATED GLASS UNITS.

2.1.3 Wired Glass

No wired glass is allowed on this project.

2.1.4 Laminated Glass

ASTM C1172, Kind LA fabricated from two nominal 1/8 inch pieces of Type I, Class 1, Quality q3, flat annealed transparent glass conforming to ASTM C1036. Flat glass shall be laminated together with a minimum of 0.090 inch thick, clear polyvinyl butyral interlayer. The total thickness shall be nominally 1/4 inch. Refer to UFC 4-010-01 "Department of Defense Minimum Antiterrorism Standards for Buildings", ASTM E1300, ASTM F1642, and ASTM F2248 (Table B-2 & B-3) for the method used to determine the Minimum Glass Thickness required in all Exterior Doors and Windows.

2.1.4.1 Laminated Glass - Anti-Terrorism/Force Protection (AT/FP)

This facility must comply with Anti-Terrorism/Force Protection Standards (AT/FP). Exterior glazing must be impact resistant laminated glass meeting the requirements of UFC 4-010-01, ASTM E1300, ASTM F1642, and ASTM F2248. Under certain conditions UFC 4-010-01 will require the selection of a Laminated Glass product that provides more protection than the items listed below.

a. Do not use less than 9.5-mm (3/8-in) nominal laminated glass for any single pane exterior windows or skylights.

b. The 9.5-mm (3/8-in) laminated glass consists of two nominal 3-mm (3/16-in) annealed glass panes bonded together with a minimum of a 0.75-mm (0.030-inch) polyvinyl-butyral (PVB) interlayer.

c. Insulating Glass Units (IGU) and Low Emissivity Insulating Glass Units (Low E), require 9.5-mm (3/8 inch) nominal laminated glass for the inboard pane.

2.1.4.2 Laminated Glass - Wind-Borne Debris Protection

This facility is in a region subject to building damage from Wind-Borne Debris. Exterior glazing must be impact resistant laminated glass meeting the requirements of ICC IBC International Building Code - 1609.1.2 Protection of openings, ASTM E1996, and ASTM E1886. (This requirement is based upon the Occupancy Category of Building and may vary.)

a. Wind-Borne Debris Protection (LM) - Glazed openings located within 30 feet (9.1 m) of grade shall meet the requirements of the Large Missile Test and require the use of laminated glass with a minimum of a 2.30-mm (0.090-inch) polyvinyl-butyral (PVB) interlayer.

b. Wind-Borne Debris Protection (SM) - Glazed openings located more than 30 feet (9.1 m) above grade shall meet the provisions of the Small Missile Test and require the use of laminated glass with a minimum of a 0.75-mm (0.030-inch) polyvinyl-butyral (PVB).

c. Wind-Borne Debris Protection (N/A) - Glazed openings located more than 60 feet (18.3 m) above grade do not require laminated glass to comply with this code but will require Laminated Glass to meet the requirements of UFC 4-010-01, ASTM E1300, ASTM F1642, and ASTM F2248 (AT/FP) listed above.

2.1.5 Mirrors

2.1.5.1 Glass Mirrors

Glass for mirrors shall be Type I transparent flat type, Class 1-clear, Glazing Quality q1 1/4 inch thick conforming to ASTM C1036. Glass shall be coated on one surface with silver coating, copper protective coating, and mirror backing paint. Silver coating shall be highly adhesive pure silver coating of a thickness which shall provide reflectivity of 83 percent or more of incident light when viewed through 1/4 inch thick glass, and shall be free of pinholes or other defects. Copper protective coating shall be pure bright reflective copper, homogeneous without sludge, pinholes or other defects, and shall be of proper thickness to prevent "adhesion pull" by mirror backing paint. Mirror backing paint shall consist of two coats of special scratch and abrasion-resistant paint , and shall be baked in uniform thickness to provide a protection for silver and copper coatings which will permit normal cutting and edge fabrication.

2.1.6 Tempered Glass

ASTM C1048, Kind FT (fully tempered), Condition A (uncoated), Type I, Class 1 (transparent), Quality q3, 1/4 inch thick unless otherwise noted.

2.1.7 Heat-Strengthened Glass

ASTM C1048, Kind HS (heat strengthened), Condition A (uncoated), Type I, Class 1 (clear), Quality q3, 1/4 inch thick.

2.2 INSULATING GLASS UNITS

Exterior Glazing shall be insulated glass units with a Tempered Glass outer lite and a Laminated Glass inner lite; the two panes of glass shall be separated by 1/2 inch airspace, filled with dehydrated gas, and hermetically sealed. Non-residential glazed systems (including frames and glass) shall be certified by the National Fenestration Rating Council with a whole-window Solar Heat Gain Coefficient (SHGC) maximum of 0.25 determined according to NFRC 200 procedures and a U-factor maximum of 0.65 Btu/hr-ft2-F in accordance with NFRC 100. Glazing shall meet or exceed a luminous efficacy of 1.0. Glazed panels shall be rated for not less than 30 Sound Transmission Class (STC) when tested for laboratory sound transmission loss according to ASTM E90 and determined by ASTM E413. Dimensional tolerances shall be as specified in IGMA TR-1200. Spacer shall

be black, roll-formed, thermally broken aluminum, with bent or tightly welded or keyed and sealed joints to completely seal the spacer periphery and eliminate moisture and hydrocarbon vapor transmission into airspace through the corners. Primary seal shall be compressed polyisobutylene and the secondary seal shall be a specially formulated silicone.

2.2.1 Low Emissivity Insulating Glass

Exterior glass panes for Low-E insulating units shall be Type I annealed flat glass, Class 1-clear with anti-reflective low-emissivity coating on No. 2 surface (inside surface of exterior pane), Quality q3 - glazing select, conforming to ASTM C1036. Glass performance shall be as required to achieve the whole assembly values noted above in, INSULATED GLASS UNITS.

2.3 SETTING AND SEALING MATERIALS

Provide as specified in the GANA Glazing Manual, IGMA TM-3000, IGMA TB-3001, and manufacturer's recommendations, unless specified otherwise herein. Do not use metal sash putty, nonskinning compounds, nonresilient preformed sealers, or impregnated preformed gaskets. Materials exposed to view and unpainted shall be gray or neutral color.

2.3.1 Sealants

Provide elastomeric sealants.

2.3.1.1 Elastomeric Sealant

ASTM C920, Type S, Grade NS, Class 12.5, Use G. Use for channel or stop glazing metal sash. Sealant shall be chemically compatible with setting blocks, edge blocks, and sealing tapes, with sealants used in manufacture of insulating glass units. Color of sealant shall be gray.

2.3.1.2 Structural Sealant

ASTM C1184, Type S; provide structural sealant where required by windows frame manufacturer to achieve windborne hurricane debris resistance performance in a fully glazed assembly.

2.3.2 Joint Backer

Joint backer shall have a diameter size at least 25 percent larger than joint width; type and material as recommended in writing by glass and sealant manufacturer.

2.3.3 Preformed Channels

Neoprene, vinyl, or rubber, as recommended by the glass manufacturer for the particular condition.

2.3.4 Sealing Tapes

Preformed, semisolid, PVC-based material of proper size and compressibility for the particular condition, complying with ASTM D2287. Use only where glazing rabbet is designed for tape and tape is recommended by the glass or sealant manufacturer. Provide spacer shims for use with compressible tapes. Tapes shall be chemically compatible with the product being set.

2.3.5 Setting Blocks and Edge Blocks

Closed-cell neoprene setting blocks shall be dense extruded type conforming to ASTM C509 and ASTM D395, Method B, Shore A durometer between 70 and 90. Edge blocking shall be Shore A durometer of 50 (plus or minus 5). Silicone setting blocks shall be required when blocks are in contact with silicone sealant. Profiles, lengths and locations shall be as required and recommended in writing by glass manufacturer. Block color shall be black.

2.3.6 Glazing Gaskets

Glazing gaskets shall be extruded with continuous integral locking projection designed to engage into metal glass holding members to provide a watertight seal during dynamic loading, building movements and thermal movements. Glazing gaskets for a single glazed opening shall be continuous one-piece units with factory-fabricated injection-molded corners free of flashing and burrs. Glazing gaskets shall be in lengths or units recommended by manufacturer to ensure against pull-back at corners. Glazing gasket profiles shall be as recommended by the manufacturer for the intended application.

2.3.6.1 Fixed Glazing Gaskets

Fixed glazing gaskets shall be closed-cell (sponge) smooth extruded compression gaskets of cured elastomeric virgin neoprene compounds conforming to ASTM C509, Type 2, Option 1.

2.3.6.2 Wedge Glazing Gaskets

Wedge glazing gaskets shall be high-quality extrusions of cured elastomeric virgin neoprene compounds, ozone resistant, conforming to ASTM C864, Option 1, Shore A durometer between 65 and 75.

2.3.6.3 Aluminum Framing Glazing Gaskets

Glazing gaskets for aluminum framing shall be permanent, elastic, non-shrinking, non-migrating, watertight and weathertight.

2.3.7 Accessories

Provide as required for a complete installation, including glazing points, clips, shims, angles, beads, and spacer strips. Provide noncorroding metal accessories. Provide primer-sealers and cleaners as recommended by the glass and sealant manufacturers.

2.4 MIRROR ACCESSORIES

2.4.1 Mastic

Mastic for setting mirrors shall be a polymer type mirror mastic resistant to water, shock, cracking, vibration and thermal expansion. Mastic shall be compatible with mirror backing paint, and shall be approved by mirror manufacturer.

2.4.2 Mirror Frames

Mirrors shall be provided with mirror frames (J-mold channels) fabricated of one-piece roll-formed Type 304 stainless steel with No. 4 brushed satin finish and concealed fasteners which will keep mirrors snug to wall.

Frames shall be 1-1/4 by 1/4 by 1/4 inch continuous at top and bottom of mirrors. Concealed fasteners of type to suit wall construction material shall be provided with mirror frames.

2.4.3 Mirror Clips

Concealed fasteners of type to suit wall construction material shall be provided with clips.

PART 3 EXECUTION

3.1 PREPARATION

Preparation, unless otherwise specified or approved, shall conform to applicable recommendations in the GANA Glazing Manual, GANA Sealant Manual, IGMA TB-3001, IGMA TM-3000, and manufacturer's recommendations. Determine the sizes to provide the required edge clearances by measuring the actual opening to receive the glass. Grind smooth in the shop glass edges that will be exposed in finish work. Leave labels in place until the installation is approved, except remove applied labels on heat-absorbing glass and on insulating glass units as soon as glass is installed. Securely fix movable items or keep in a closed and locked position until glazing compound has thoroughly set.

3.2 GLASS SETTING

Shop glaze or field glaze items to be glazed using glass of the quality and thickness specified or indicated. Glazing, unless otherwise specified or approved, shall conform to applicable recommendations in the GANA Glazing Manual, GANA Sealant Manual, IGMA TB-3001, IGMA TM-3000, and manufacturer's recommendations. Aluminum windows, wood doors, and wood windows may be glazed in conformance with one of the glazing methods described in the standards under which they are produced, except that face puttying with no bedding will not be permitted. Handle and install glazing materials in accordance with manufacturer's instructions. Use beads or stops which are furnished with items to be glazed to secure the glass in place. Verify products are properly installed, connected, and adjusted.

3.2.1 Sheet Glass

Cut and set with the visible lines or waves horizontal.

3.2.2 Insulating Glass Units

Do not grind, nip, or cut edges or corners of units after the units have left the factory. Springing, forcing, or twisting of units during setting will not be permitted. Handle units so as not to strike frames or other objects. Installation shall conform to applicable recommendations of IGMA TB-3001 and IGMA TM-3000.

3.2.3 Installation of Wire Glass

Install glass for fire doors in accordance with installation requirements of NFPA 80.

3.2.4 Installation of Heat-Absorbing Glass

Glass shall have clean-cut, factory-fabricated edges. Field cutting will not be permitted.

3.2.5 Installation of Laminated Glass

Sashes which are to receive laminated glass shall be weeped to the outside to allow water drainage into the channel.

3.3 ADDITIONAL REQUIREMENTS FOR GLAZING CONTROL TOWER WINDOWS

3.3.1 Materials and Methods of Installation

Comply with the manufacturer's warranty and written instructions, except as indicated. Install units with the heat-absorbing glass to the exterior. Secure glass in place with bolts and spring clips. The minimum clearance between bolts and edge of glass unit shall be 3/16 inch. The glass shall be edged with 3/16 inch thick continuous neoprene, vinyl, or other approved material. Trim edging after installation. The channel shapes or strips shall be firmly held against the glass by the spring action of the extruded metal moldings. Resilient setting blocks, spacer strips, clips, bolts, washers, angles, applicable glazing compound, and resilient channels or cemented-on materials shall be as recommended in the written instructions of the glass manufacturer, as approved.

3.3.2 Tolerances and Clearances of Units

Design to prevent the transfer of stress in the setting frames to the glass. Springing, twisting, or forcing of units during setting will not be permitted.

3.4 CLEANING

Clean glass surfaces and remove labels, paint spots, putty, and other defacement as required to prevent staining. Glass shall be clean at the time the work is accepted.

3.5 PROTECTION

Glass work shall be protected immediately after installation. Glazed openings shall be identified with suitable warning tapes, cloth or paper flags, attached with non-staining adhesives. Reflective glass shall be protected with a protective material to eliminate any contamination of the reflective coating. Protective material shall be placed far enough away from the coated glass to allow air to circulate to reduce heat buildup and moisture accumulation on the glass. Upon removal, separate protective materials for reuse or recycling. Glass units which are broken, chipped, cracked, abraded, or otherwise damaged during construction activities shall be removed and replaced with new units.

3.6 WASTE MANAGEMENT

Disposal and recycling of waste materials, including corrugated cardboard recycling, shall be in accordance with the Waste Management Plan. Close and seal tightly all partly used sealant containers and store protected in well-ventilated, fire-safe area at moderate temperature.

-- End of Section --

THIS PAGE HAS BEEN INTENTIONALLY LEFT BLANK

SECTION 08 91 00

METAL WALL AND DOOR LOUVERS
05/11

PART 1 GENERAL

1.1 REFERENCES

The publications listed below form a part of this specification to the extent referenced. The publications are referred to within the text by the basic designation only.

AIR MOVEMENT AND CONTROL ASSOCIATION INTERNATIONAL (AMCA)

AMCA 500-D	(2012) Laboratory Methods of Testing Dampers for Rating
AMCA 511	(2013) Certified Ratings Program for Air Control Devices

ASTM INTERNATIONAL (ASTM)

ASTM A1008/A1008M	(2015) Standard Specification for Steel, Sheet, Cold-Rolled, Carbon, Structural, High-Strength Low-Alloy and High-Strength Low-Alloy with Improved Formability, Solution Hardened, and Bake Hardened
ASTM A653/A653M	(2015) Standard Specification for Steel Sheet, Zinc-Coated (Galvanized) or Zinc-Iron Alloy-Coated (Galvannealed) by the Hot-Dip Process
ASTM B209	(2014) Standard Specification for Aluminum and Aluminum-Alloy Sheet and Plate
ASTM B221	(2014) Standard Specification for Aluminum and Aluminum-Alloy Extruded Bars, Rods, Wire, Profiles, and Tubes

1.2 SUBMITTALS

Government approval is required for submittals with a "G" designation; submittals not having a "G" designation are for Contractor Quality Control approval. The following shall be submitted in accordance with Section 01 33 00 SUBMITTAL PROCEDURES:

SD-02 Shop Drawings

Wall louvers

SD-03 Product Data

Metal Wall Louvers

SD-04 Samples

Wall louvers

Door louvers

1.3 DELIVERY, STORAGE, AND PROTECTION

Deliver materials to the site in an undamaged condition. Carefully store materials off the ground to provide proper ventilation, drainage, and protection against dampness. Louvers shall be free from nicks, scratches, and blemishes. Replace defective or damaged materials with new.

1.4 DETAIL DRAWINGS

Show all information necessary for fabrication and installation of wall louvers. Indicate materials, sizes, thicknesses, fastenings, and profiles.

1.5 COLOR SAMPLES

Colors of finishes for wall louvers and door louvers shall closely approximate colors indicated. Where color is not indicated, submit the manufacturer's standard colors to the Contracting Officer for selection.

PART 2 PRODUCTS

2.1 MATERIALS

2.1.1 Galvanized Steel Sheet

ASTM A653/A653M, coating designation G90.

2.1.2 Aluminum Sheet

ASTM B209, alloy 3003 or 5005 with temper as required for forming.

2.1.3 Extruded Aluminum

ASTM B221, alloy 6063-T5 or -T52.

2.1.4 Cold Rolled Steel Sheet

ASTM A1008/A1008M, Class 1, with matte finish. Use for interior louvers only.

2.2 METAL WALL LOUVERS

Weather resistant type, with bird screens and made to withstand a wind load of not less than 40 pounds per square foot. Wall louvers shall bear the AMCA certified ratings program seal for air performance and water penetration in accordance with AMCA 500-D and AMCA 511. The rating shall show a water penetration of 0.20 or less ounce per square foot of free area at a free velocity of 800 feet per minute.

2.2.1 Extruded Aluminum Louvers

Fabricated of extruded 6063-T5 or -T52 aluminum with a wall thickness of not less than 0.081 inch.

2.2.2 Formed Metal Louvers

Formed of zinc-coated steel sheet not thinner than 16 U.S. gage, or aluminum sheet not less than 0.08 inch thick.

2.2.3 Mullions and Mullion Covers

Same material and finish as louvers. Provide mullions where indicated . Provide mullions covers on both faces of joints between louvers.

2.2.4 Screens and Frames

For aluminum louvers, provide 1/2 inch square mesh, 14 or 16 gage aluminum or 1/4 inch square mesh, 16 gage aluminum bird screening. For steel louvers, provide 1/2 inch square mesh, 12 or 16 gage zinc-coated steel; 1/2 inch square mesh, 16 gage copper; or 1/4 inch square mesh, 16 gage zinc-coated steel or copper bird screening. Mount screens in removable, rewirable frames of same material and finish as the louvers.

2.3 DOOR LOUVERS

Inverted "Y" or Inverted "V" sightproof type not less than one inch thick with matching metal trim. Louvers for exterior doors shall be weather resistant type.

2.3.1 Extruded Aluminum Door Louvers

Fabricate of 6063-T5 or -T52 aluminum alloy with a wall thickness of not less than 0.050 inch thick. Frames and trim shall be clamp-in "L" type.

2.3.2 Formed Metal Door Louvers

Fabricate of 20 U.S. gage steel sheet. Trim shall be beveled "Z" molding both sides.

2.3.3 Screens and Frames

For exterior doors, provide aluminum insect screens, 18 by 16 or 18 by 14 mesh. Mount screens in removable, rewirable frames of same material and finish as the louvers.

2.4 FASTENERS AND ACCESSORIES

Provide stainless steel screws and fasteners for aluminum louvers and zinc-coated or stainless steel screws and fasteners for steel louvers. Provide other accessories as required for complete and proper installation.

2.5 FINISHES

2.5.1 Steel

Provide factory-applied coating. Clean and phosphate treat exposed surfaces and apply rust-inhibitive primer and baked enamel finish coat, one mil minimum total dry film thickness, color as per drawings, Finish Schedule.

PART 3 EXECUTION

3.1 INSTALLATION

3.1.1 Wall Louvers

Install using stops or moldings, flanges, strap anchors, or jamb fasteners as appropriate for the wall construction and in accordance with manufacturer's recommendations.

3.1.2 Door Louvers

Install louvers in wood doors by using metal "Z" or "L" moldings. Fasten moldings to door with screws.

3.1.3 Screens and Frames

Attach frames to louvers with screws or bolts.

3.2 PROTECTION FROM CONTACT OF DISSIMILAR MATERIALS

3.2.1 Copper or Copper-Bearing Alloys

Paint copper or copper-bearing alloys in contact with dissimilar metal with heavy-bodied bituminous paint or separate with inert membrane.

3.2.2 Aluminum

Where aluminum contacts metal other than zinc, paint the dissimilar metal with a primer and two coats of aluminum paint.

3.2.3 Metal

Paint metal in contact with mortar, concrete, or other masonry materials with alkali-resistant coatings such as heavy-bodied bituminous paint.

3.2.4 Wood

Paint wood or other absorptive materials that may become repeatedly wet and in contact with metal with two coats of aluminum paint or a coat of heavy-bodied bituminous paint.

-- End of Section --

SECTION 09 22 00

SUPPORTS FOR PLASTER AND GYPSUM BOARD
02/10

PART 1 GENERAL

1.1 REFERENCES

The publications listed below form a part of this specification to the extent referenced. The publications are referred to within the text by the basic designation only.

ASTM INTERNATIONAL (ASTM)

ASTM A463/A463M	(2010) Standard Specification for Steel Sheet, Aluminum-Coated, by the Hot-Dip Process
ASTM A653/A653M	(2015) Standard Specification for Steel Sheet, Zinc-Coated (Galvanized) or Zinc-Iron Alloy-Coated (Galvannealed) by the Hot-Dip Process
ASTM C645	(2013) Nonstructural Steel Framing Members
ASTM C754	(2011) Installation of Steel Framing Members to Receive Screw-Attached Gypsum Panel Products
ASTM C841	(2003; R 2013) Installation of Interior Lathing and Furring
ASTM C847	(2012) Standard Specification for Metal Lath

NATIONAL ASSOCIATION OF ARCHITECTURAL METAL MANUFACTURERS (NAAMM)

NAAMM EMLA 920	(2009) Guide Specifications for Metal Lathing and Furring

UNDERWRITERS LABORATORIES (UL)

UL Fire Resistance	(2014) Fire Resistance Directory

1.2 SUBMITTALS

Government approval is required for submittals with a "G" designation; submittals not having a "G" designation are for Contractor Quality Control approval. Submit the following in accordance with Section 01 33 00 SUBMITTAL PROCEDURES:

SD-02 Shop Drawings

Metal support systems; G

Submit for the erection of metal framing, furring, and ceiling suspension systems. Indicate materials, sizes, thicknesses, and

fastenings.

1.3 DELIVERY, STORAGE, AND HANDLING

Deliver materials to the job site and store in ventilated dry locations. Storage area shall permit easy access for inspection and handling. If materials are stored outdoors, stack materials off the ground, supported on a level platform, and fully protected from the weather. Handle materials carefully to prevent damage. Remove damaged items and provide new items.

PART 2 PRODUCTS

2.1 MATERIALS

Provide steel materials for metal support systems with galvanized coating ASTM A653/A653M, G-60; aluminum coating ASTM A463/A463M, T1-25; or a 55-percent aluminum-zinc coating.

2.1.1 Materials for Attachment of Lath

2.1.1.1 Suspended and Furred Ceiling Systems and Wall Furring

ASTM C841, and ASTM C847.

2.1.1.2 Non-loadbearing Wall Framing

NAAMM EMLA 920.

2.1.2 Materials for Attachment of Gypsum Wallboard

2.1.2.1 Suspended and Furred Ceiling Systems

ASTM C645.

2.1.2.2 Nonload-Bearing Wall Framing and Furring

ASTM C645, but not thinner than 0.0179 inch thickness, with 0.0329 inch minimum thickness supporting wall hung items such as cabinetwork, equipment and fixtures and for studs at the exterior wall of the PEB.

2.1.2.3 Furring Structural Steel Columns

ASTM C645. Steel (furring) clips and support angles listed in UL Fire Resistance may be provided in lieu of steel studs for erection of gypsum wallboard around structural steel columns.

2.1.2.4 Z-Furring Channels with Wall Insulation

Not lighter than 26 gage galvanized steel, Z-shaped, with 1-1/4 inch and 3/4 inch flanges and depth as required by the insulation thickness provided.

PART 3 EXECUTION

3.1 INSTALLATION

3.1.1 Systems for Attachment of Lath

3.1.1.1 Suspended and Furred Ceiling Systems and Wall Furring

ASTM C841, except as indicated otherwise.

3.1.1.2 Non-loadbearing Wall Framing

NAAMM EMLA 920, except provide framing members 16 inches o.c. unless indicated otherwise.

3.1.2 Systems for Attachment of Gypsum Wallboard

3.1.2.1 Suspended and Furred Ceiling Systems

ASTM C754, except provide framing members 16 inches o.c. unless indicated otherwise.

3.1.2.2 Non-loadbearing Wall Framing and Furring

ASTM C754, except as indicated otherwise.

3.1.2.3 Furring Structural Steel Columns

Install studs or galvanized steel clips and support angles for erection of gypsum wallboard around structural steel columns in accordance with the UL Fire Resistance, design number(s) indicated.

3.1.2.4 Z-Furring Channels with Wall Insulation

Install Z-furring channels vertically spaced not more than 24 inches o.c. Locate Z-furring channels at interior and exterior corners in accordance with manufacturer's printed erection instructions. Fasten furring channels to masonry walls with powder-driven fasteners or hardened concrete steel nails through narrow flange of channel. Space fasteners not more than 24 inches o.c.

3.2 ERECTION TOLERANCES

Provide framing members which will be covered by finish materials such as wallboard, plaster, or ceramic tile set in a mortar setting bed, within the following limits:

a. Layout of walls and partitions: 1/4 inch from intended position;

b. Plates and runners: 1/4 inch in 8 feet from a straight line;

c. Studs: 1/4 inch in 8 feet out of plumb, not cumulative; and

d. Face of framing members: 1/4 inch in 8 feet from a true plane.

Provide framing members which will be covered by ceramic tile set in dry-set mortar, latex-portland cement mortar, or organic adhesive within the following limits:

a. Layout of walls and partitions: 1/4 inch from intended position;

b. Plates and runners: 1/8 inch in 8 feet from a straight line;

c. Studs: 1/8 inch in 8 feet out of plumb, not cumulative; and

d. Face of framing members: 1/8 inch in 8 feet from a true plane.

-- End of Section --

SECTION 09 29 00

GYPSUM BOARD
05/11

PART 1 GENERAL

1.1 REFERENCES

The publications listed below form a part of this specification to the extent referenced. The publications are referred to within the text by the basic designation only.

AMERICAN NATIONAL STANDARDS INSTITUTE (ANSI)

ANSI A108.11	(1992; Reaffirmed 2005) Specifications for Interior Installation of Cementitious Backer Units

ASTM INTERNATIONAL (ASTM)

ASTM C1002	(2007; R 2013) Standard Specification for Steel Self-Piercing Tapping Screws for the Application of Gypsum Panel Products or Metal Plaster Bases to Wood Studs or Steel Studs
ASTM C1047	(2010a) Standard Specification for Accessories for Gypsum Wallboard and Gypsum Veneer Base
ASTM C1177/C1177M	(2013) Standard Specification for Glass Mat Gypsum Substrate for Use as Sheathing
ASTM C1178/C1178M	(2013) Standard Specification for Glass Mat Water-Resistant Gypsum Backing Panel
ASTM C1396/C1396M	(2013) Standard Specification for Gypsum Board
ASTM C475/C475M	(2012) Joint Compound and Joint Tape for Finishing Gypsum Board
ASTM C840	(2013) Application and Finishing of Gypsum Board
ASTM C954	(2011) Steel Drill Screws for the Application of Gypsum Panel Products or Metal Plaster Bases to Steel Studs from 0.033 in. (0.84 mm) to 0.112 in. (2.84 mm) in Thickness
ASTM D1149	(2007; R 2012) Standard Test Method for Rubber Deterioration - Surface Ozone Cracking in a Chamber
ASTM D226/D226M	(2009) Standard Specification for Asphalt-Saturated Organic Felt Used in

Roofing and Waterproofing

ASTM D412	(2006a; R 2013) Standard Test Methods for Vulcanized Rubber and Thermoplastic Elastomers - Tension
ASTM D624	(2000; R 2012) Tear Strength of Conventional Vulcanized Rubber and Thermoplastic Elastomers
ASTM E2129	(2010) Standard Practice for Data Collection for Sustainability Assessment of Building Products

GYPSUM ASSOCIATION (GA)

GA 214	(2010) Recommended Levels of Gypsum Board Finish
GA 216	(2010) Application and Finishing of Gypsum Panel Products
GA 224	(2008) Installation of Predecorated Gypsum Board
GA 253	(2012) Application of Gypsum Sheathing

U.S. GREEN BUILDING COUNCIL (USGBC)

LEED NC	(2009) Leadership in Energy and Environmental Design(tm) New Construction Rating System

UNDERWRITERS LABORATORIES (UL)

UL Fire Resistance	(2014) Fire Resistance Directory

1.2 SUBMITTALS

Government approval is required for submittals with a "G" designation; submittals not having a "G" designation are for Contractor Quality Control approval. Submit the following in accordance with Section 01 33 00 SUBMITTAL PROCEDURES:

SD-03 Product Data

Cementitious backer units

Glass Mat Water-Resistant Gypsum Tile Backing Board

Water-Resistant Gypsum Backing Board

Glass Mat Covered or Reinforced Gypsum Sheathing

Glass Mat Covered or Reinforced Gypsum Sheathing Sealant

Accessories

Submit for each type of gypsum board and for cementitious backer

units.

Gypsum Board; (LEED NC)

Submit documentation indicating percentage of post-industrial and post-consumer recycled content per unit of product. Indicate relative dollar value of recycled content products to total dollar value of products included in project.

Adhesives; (LEED NC)
Joint Treatment Materials

Submit manufacturer's product data, indicating VOC content.

Local/Regional Materials; (LEED NC)

Documentation indicating distance between manufacturing facility and the project site. Indicate distance of raw material origin from the project site. Indicate relative dollar value of local/regional materials to total dollar value of products included in project.

Environmental Data

SD-07 Certificates

Asbestos Free Materials; G

Certify that gypsum board types, gypsum backing board types, cementitious backer units, and joint treating materials do not contain asbestos.

SD-08 Manufacturer's Instructions

Material Safety Data Sheets

SD-10 Operation and Maintenance Data

Manufacturer maintenance instructions

Waste Management

SD-11 Closeout Submittals

Local/Regional Materials; (LEED)

LEED documentation relative to local/regional materials credit in accordance with LEED Reference Guide. Include in LEED Documentation Notebook.

Gypsum Board; (LEED)

LEED documentation relative to recycled content credit in accordance with LEED Reference Guide. Include in LEED Documentation Notebook.

Adhesives; (LEED)

LEED documentation relative to low emitting materials credit in accordance with LEED Reference Guide. Include in LEED Documentation Notebook.

1.3 DELIVERY, STORAGE, AND HANDLING

1.3.1 Delivery

Deliver materials in the original packages, containers, or bundles with each bearing the brand name, applicable standard designation, and name of manufacturer, or supplier.

1.3.2 Storage

Keep materials dry by storing inside a sheltered building. Where necessary to store gypsum board and cementitious backer units outside, store off the ground, properly supported on a level platform, and protected from direct exposure to rain, snow, sunlight, and other extreme weather conditions. Provide adequate ventilation to prevent condensation. Store per manufacturer's recommendations for allowable temperature and humidity range. Gypsum wallboard shall not be stored with materials which have high emissions of volatile organic compounds (VOCs) or other contaminants, including. Do not store panels near materials that may offgas or emit harmful fumes, such as kerosene heaters, fresh paint, or adhesives.

1.3.3 Handling

Neatly stack gypsum board and cementitious backer units flat to prevent sagging or damage to the edges, ends, and surfaces.

1.4 ENVIRONMENTAL CONDITIONS

1.4.1 Temperature

Maintain a uniform temperature of not less than 50 degrees F in the structure for at least 48 hours prior to, during, and following the application of gypsum board, cementitious backer units, and joint treatment materials, or the bonding of adhesives.

1.4.2 Exposure to Weather

Protect gypsum board and cementitious backer unit products from direct exposure to rain, snow, sunlight, and other extreme weather conditions.

1.4.3 Temporary Ventilation

Provide temporary ventilation for work of this section.

1.5 SUSTAINABLE DESIGN REQUIREMENTS

1.5.1 Local/Regional Materials

Use materials or products extracted, harvested, or recovered, as well as manufactured, within a 500 mile radius from the project site, if available from a minimum of three sources. See Section 01 33 29 LEED(tm) DOCUMENTATION for cumulative total local material requirements. Gypsum board materials may be locally available.

1.5.2 Environmental Data

Submit Table 1 of ASTM E2129 for the following products: all gypsum products.

1.6 QUALIFICATIONS

Furnish type of gypsum board work specialized by the installer with a minimum of 3years of documented successful experience.

PART 2 PRODUCTS

2.1 MATERIALS

Conform to specifications, standards and requirements specified. Provide gypsum board types, gypsum backing board types, cementitious backing units, and joint treating materials manufactured from asbestos free materials only.

Submit Material Safety Data Sheets and manufacturer maintenance instructions for gypsum materials including adhesives.

2.1.1 Gypsum Board

ASTM C1396/C1396M. Gypsum board shall contain a minimum of 5 percent post-consumer recycled content, or a minimum of 20 percent post-industrial recycled content. See Section 01 33 29 LEED(tm) DOCUMENTATION for cumulative total recycled content requirements. Gypsum board may contain post-consumer or post-industrial recycled content.

2.1.1.1 Regular

48 inch wide, 1/2 and 5/8 inch thick, tapered edges; thickness as indicated on drawings.

2.1.1.2 Type X (Special Fire-Resistant)

48 inch wide, 5/8 inch thick, tapered edges.

2.1.2 Gypsum Backing Board

ASTM C1396/C1396M, gypsum backing board shall be used as a base in a multilayer system.

2.1.2.1 Type X (Special Fire-Resistant)

48 inch wide, 5/8 inch thick, square edges.

2.1.3 Regular Water-Resistant Gypsum Backing Board

ASTM C1396/C1396M

2.1.3.1 Regular

48 inch wide, 1/2 and 5/8 inch thick, tapered edges; thickness as noted on drawings.

2.1.3.2 Type X (Special Fire-Resistant)

48 inch wide, 5/8 inch thick, tapered edges.

2.1.4 Glass Mat Water-Resistant Gypsum Tile Backing Board

ASTM C1178/C1178M

2.1.4.1 Regular

48 inch wide, 1/2 5/8 inch thick, square edges; thinkness as noted on drawings.

2.1.4.2 Type X (Special Fire-Resistant)

48 inch wide, 5/8 inch thick, square edges.

2.1.5 Glass Mat Covered or Reinforced Gypsum Sheathing

Exceeds physical properties of ASTM C1396/C1396M and ASTM C1177/C1177M. Provide 1/2 or 5/8 inch, gypsum sheathing; thickness as noted on drawings. Provide gypsum board of with a noncombustible water-resistant core, with glass mat surfaces embedded to the gypsum core or reinforcing embedded throughout the gypsum core. Warrant gypsum sheathing board for at least twelve months against delamination due to direct weather exposure. Provide continuous, asphalt impregnated, building felt to cover exterior face of sheathing. Seal all joints, seams, and penetrations with compatible sealant.

2.1.5.1 Glass Mat Covered or Reinforced Gypsum Sheathing Sealant

Provide sealant compatible with gypsum sheathing, rubber washers for masonry veneer anchors, and other associated cavity wall components such as anchors and through wall flashing. Provide sealants for gypsum sheathing board edge seams and veneer anchor penetrations recommended by the gypsum sheathing manufacturer and have the following performance requirements:

a. ASTM D412: Tensile Strength, 80 psi
b. ASTM D412: Ultimate Tensile Strength (maximum elongation), 170 psi
c. ASTM D624: Tear Strength, dieB, 27 ppi
d. ASTM D1149: Joint Movement Capability after 14 Days cure, plus or minus 50 percent.

2.1.6 Cementitious Backer Units

In accordance with the Tile Council of America (TCA) Handbook.

2.1.7 Joint Treatment Materials

ASTM C475/C475M. Use all purpose joint and texturing compound containing inert fillers and natural binders, including lime compound. Pre-mixed compounds shall be free of antifreeze, vinyl adhesives, preservatives, biocides and other slow releasing compounds.

2.1.7.1 Embedding Compound

Specifically formulated and manufactured for use in embedding tape at gypsum board joints and compatible with tape, substrate and fasteners.

2.1.7.2 Finishing or Topping Compound

Specifically formulated and manufactured for use as a finishing compound.

2.1.7.3 All-Purpose Compound

Specifically formulated and manufactured to serve as both a taping and a finishing compound and compatible with tape, substrate and fasteners.

2.1.7.4 Setting or Hardening Type Compound

Specifically formulated and manufactured for use with fiber glass mesh tape.

2.1.7.5 Joint Tape

Use cross-laminated, tapered edge, reinforced paper, or fiber glass mesh tape recommended by the manufacturer.

2.1.8 Fasteners

2.1.8.1 Screws

ASTM C1002, Type "G", Type "S" or Type "W" steel drill screws for fastening gypsum board to gypsum board, wood framing members and steel framing members less than 0.033 inch thick. ASTM C954 steel drill screws for fastening gypsum board to steel framing members 0.033 to 0.112 inch thick. Provide cementitious backer unit screws with a polymer coating.

2.1.8.2 Staples

No. 16 USS gageflattened galvanized wire staples with 7/16 inch wide crown outside measurement and divergent point for base ply of two-ply gypsum board application. Use as follows:

Length of Legs	Thickness of Gypsum Board
1-1/8 inches	1/2 inch
1-1/4 inches	5/8 inch

2.1.9 Adhesives

Do not use adhesive containing benzene, carbon tetrachloride, or trichloroethylene. Adhesive shall contain a maximum VOC content of 50 grams per liter.

2.1.9.1 Adhesive for Fastening Gypsum Board to Metal Framing

Not permitted.

2.1.9.2 Adhesive for Laminating

Not permitted.

2.1.10 Accessories

ASTM C1047. Fabricate from corrosion protected steel or plastic designed for intended use. Accessories manufactured with paper flanges are not

acceptable. Flanges shall be free of dirt, grease, and other materials that may adversely affect bond of joint treatment. Provide prefinished or job decorated materials.

2.1.11 Asphalt Impregnated Building Felt

Provide a 15 lb asphalt moisture barrier over gypsum sheathing. Conforming to ASTM D226/D226M Type 1 (No. 15) for asphalt impregnated building felt.

2.1.12 Water

Provide clean, fresh, and potable water.

PART 3 EXECUTION

3.1 EXAMINATION

3.1.1 Framing and Furring

Verify that framing and furring are securely attached and of sizes and spacing to provide a suitable substrate to receive gypsum board and cementitious backer units. Verify that all blocking, headers and supports are in place to support plumbing fixtures and to receive soap dishes, grab bars, towel racks, and similar items. Do not proceed with work until framing and furring are acceptable for application of gypsum board and cementitious backer units.

3.2 APPLICATION OF GYPSUM BOARD

Apply gypsum board to framing and furring members in accordance with ASTM C840 or GA 216 and the requirements specified. Apply gypsum board with separate panels in moderate contact; do not force in place. Stagger end joints of adjoining panels. Neatly fit abutting end and edge joints. Use gypsum board of maximum practical length; select panel sizes to minimize waste. Cut out gypsum board to make neat, close, and tight joints around openings. In vertical application of gypsum board, provide panels in lengths required to reach full height of vertical surfaces in one continuous piece. Lay out panels to minimize waste; reuse cutoffs whenever feasible. Surfaces of gypsum board and substrate members may be bonded together with an adhesive. Treat edges of cutouts for plumbing pipes, screwheads, and joints with water-resistant compound as recommended by the gypsum board manufacturer. Minimize framing by floating corners with single studs and drywall clips. Install 5/8 inch gypsum over framing at 16 inches on center unless noted otherwise. Gypsum wall board 1/2 inches thick may be installed on ceilings and soffits if fire rating in this area is not required. Provide type of gypsum board for use in each system specified herein as indicated.

3.2.1 Application of Single-Ply Gypsum Board to Wood Framing

Apply in accordance with ASTM C840, System I or GA 216.

3.2.2 Application of Two-Ply Gypsum Board to Wood Framing

Apply in accordance with ASTM C840, System II or GA 216.

3.2.3 Adhesive Nail-On Application to Wood Framing

Apply in accordance with ASTM C840, System III or GA 216. This method may

be used in lieu of ASTM C840, System I at the option of the Contractor.

3.2.4 Semi-Solid Gypsum Board Partitions

Provide in accordance with ASTM C840, System IV or GA 216 .

3.2.5 Solid Gypsum Board Partitions

Provide in accordance with ASTM C840, System V or GA 216.

3.2.6 Adhesive Application to Interior Masonry or Concrete Walls

Apply in accordance with ASTM C840, System VI or GA 216.

3.2.7 Application of Gypsum Board to Steel Framing and Furring

Apply in accordance with ASTM C840, System VIII or GA 216.

3.2.8 Arches and Bending Radii

Apply gypsum board in accordance with ASTM C840, System IX or GA 216.

3.2.9 Gypsum Board for Wall Tile or Tile Base Applied with Adhesive

In dry areas (areas other than tubs, shower enclosures, saunas, steam rooms, gang shower rooms), apply glass mat water-resistant gypsum tile backing board or water-resistant gypsum backing board in accordance with ASTM C840, System X or GA 216.

3.2.10 Exterior Application

Apply exterior gypsum board (such as at soffits) in accordance with ASTM C840, System XI or GA 216.

3.2.11 Glass Mat Covered or Fiber Reinforced Gypsum Sheathing

Apply gypsum sheathing in accordance to gypsum association publications GA 253. Follow gypsum sheathing manufacturer's requirements of design details for joints and fasteners and be properly installed to protect the substrate from moisture intrusion. Do not leave exposed surfaces of the gypsum sheathing beyond the manufacturer's recommendation without a weather barrier cladding. Provide continuous asphalt impregnated building felt over sheathing surface in shingle fashion with edges and ends lapped a minimum of 6 inch. Property flash the openings.

3.2.12 Floating Interior Angles

Minimize framing by floating corners with single studs and drywall clips. Locate the attachment fasteners adjacent to ceiling and wall intersections in accordance with ASTM C840, System XII or GA 216, for single-ply applications of gypsum board to framing.

3.2.13 Control Joints

Install expansion and contraction joints in ceilings and walls in accordance with ASTM C840, System XIII or GA 216. Fill control joints between studs in fire-rated construction with firesafing insulation to match the fire-rating of construction.

3.2.14 Application of Foil-Backed Gypsum Board

Apply foil-backed gypsum board in accordance with ASTM C840, System XIV or GA 216.

3.2.15 Application of Predecorated Gypsum Board

Apply predecorated gypsum board in accordance with GA 224. Attach predecorated gypsum board with adhesive and fasteners as recommended by the manufacturer. Conceal fasteners in the finished work.

3.3 APPLICATION OF CEMENTITIOUS BACKER UNITS

3.3.1 Application

In wet areas (shower enclosures), apply cementitious backer units in accordance with ANSI A108.11. Place a 15 lb asphalt impregnated, continuous felt paper membrane behind cementitious backer units, between backer units and studs or base layer of gypsum board. Place membrane with a minimum 6 inch overlap of sheets laid shingle style.

3.3.2 Joint Treatment

ANSI A108.11.

3.4 FINISHING OF GYPSUM BOARD

Tape and finish gypsum board in accordance with ASTM C840, GA 214 and GA 216. Finish plenum areas above ceilings to Level 1 in accordance with GA 214. Finish water resistant gypsum backing board, ASTM C1396/C1396M, to receive ceramic tile to Level 2 in accordance with GA 214. Finish walls and ceilings to receive a heavy-grade wall covering or heave textured finish before painting to Level 3 in accordance with GA 214. Finish walls and ceilings without critical lighting to receive flat paints, light textures, or wall coverings to Level 4 in accordance with GA 214. Unless otherwise specified, finish all gypsum board walls, partitions and ceilings to Level 5 in accordance with GA 214. Provide joint, fastener depression, and corner treatment. Tool joints as smoothly as possible to minimize sanding and dust. Do not use fiber glass mesh tape with conventional drying type joint compounds; use setting or hardening type compounds only. Provide treatment for water-resistant gypsum board as recommended by the gypsum board manufacturer. Protect workers, building occupants, and HVAC systems from gypsum dust.

3.4.1 Uniform Surface

Wherever gypsum board is to receive eggshell, semigloss or gloss paint finish, or where severe, up or down lighting conditions occur, finish gypsum wall surface in accordance to GA 214 Level 5. In accordance with GA 214 Level 5, apply a thin skim coat of joint compound to the entire gypsum board surface, after the two-coat joint and fastener treatment is complete and dry.

3.5 SEALING

Seal openings around pipes, fixtures, and other items projecting through gypsum board and cementitious backer units as specified in Section 07 92 00 JOINT SEALANTS Apply material with exposed surface flush with gypsum board or cementitious backer units.

3.5.1 Sealing for Glass Mat or Reinforced Gypsum Board Sheathing

Apply silicone sealant in a 3/8 inch bead to all joints and trowel flat. Apply enough of the same sealant to all fasteners penetrating through the glass mat gypsum board surface to completely cover the penetration when troweled flat. Do not place construction and materials behind sheathing until a visual inspection of sealed joints during daylight hours has been completed by Contracting Officer.

3.6 FIRE-RESISTANT ASSEMBLIES

Wherever fire-rated construction is indicated, provide materials and application methods, including types and spacing of fasteners, wall and ceiling framing in accordance with the specifications contained in UL Fire Resistance for the Design Number(s) indicated. Joints of fire-rated gypsum board enclosures shall be closed and sealed in accordance with UL test requirements or GA requirements. Seal penetrations through rated partitions and ceilings tight in accordance with tested systems.

3.7 PATCHING

Patch surface defects in gypsum board to a smooth, uniform appearance, ready to receive finishes. Remove predecorated gypsum board which cannot be restored to like-new condition. Provide new predecorated gypsum board.

3.8 SHAFTWALL FRAMING

Install the shaftwall system in accordance with the system manufacturer's published instructions. Coordinate bucks, anchors, blocking and other items placed in or behind shaftwall framing with electrical and mechanical work. Patch or replace fireproofing materials which are damaged or removed during shaftwall construction.

3.9 WASTE MANAGEMENT

As specified in Waste Management Plan and as follows. Separate clean waste gypsum products from contaminants. Do not include wood, plastic, metal, asphalt-impregnated gypsum board, or any gypsum board coated with glass fiber, vinyl, decorative paper, or other finish. Place in designated area and protect from moisture and contamination. Coordinate with Section 32 05 33 LANDSCAPE ESTABLISHMENT to identify requirements for gypsum soil amendment and to prepare scrap gypsum board for use as soil amendment.

Identify manufacturer's policy for collection or return of remaining construction scrap, and unused material. Institute demolition and construction recycling to take advantage of manufacturer's programs. When such a service is not available, seek local recyclers to reclaim the materials.

-- End of Section --

THIS PAGE HAS BEEN INTENTIONALLY LEFT BLANK

SECTION 09 30 13

CERAMIC TILING
11/13

PART 1 GENERAL

1.1 REFERENCES

The publications listed below form a part of this specification to the extent referenced. The publications are referred to within the text by the basic designation only.

AMERICAN NATIONAL STANDARDS INSTITUTE (ANSI)

ANSI A137.1	(2012) American National Standards Specifications for Ceramic Tile

ASTM INTERNATIONAL (ASTM)

ASTM C1027	(2009) Standard Test Method for Determining Visible Abrasion Resistance of Glazed Ceramic Tile
ASTM C1178/C1178M	(2013) Standard Specification for Glass Mat Water-Resistant Gypsum Backing Panel
ASTM C144	(2011) Standard Specification for Aggregate for Masonry Mortar
ASTM C150/C150M	(2012) Standard Specification for Portland Cement
ASTM C206	(2003; R 2009) Standard Specification for Finishing Hydrated Lime
ASTM C207	(2006; R 2011) Standard Specification for Hydrated Lime for Masonry Purposes
ASTM C241/C241M	(2013) Standard Specification for Abrasion Resistance of Stone Subjected to Foot Traffic
ASTM C33/C33M	(2013) Standard Specification for Concrete Aggregates
ASTM C373	(1988; R 2006) Water Absorption, Bulk Density, Apparent Porosity, and Apparent Specific Gravity of Fired Whiteware Products
ASTM C648	(2004; R 2009) Breaking Strength of Ceramic Tile
ASTM C920	(2014a) Standard Specification for Elastomeric Joint Sealants

MARBLE INSTITUTE OF AMERICA (MIA)

MIA Design Manual	(2003) Dimension Stone Design Manual

TILE COUNCIL OF NORTH AMERICA (TCNA)

TCNA Hdbk	(2013) Handbook for Ceramic, Glass, and Stone Tile Installation

U.S. GREEN BUILDING COUNCIL (USGBC)

LEED GBDC	(2009) LEED Reference Guide for Green Building Design and Construction
LEED NC	(2009) Leadership in Energy and Environmental Design(tm) New Construction Rating System

U.S. NATIONAL ARCHIVES AND RECORDS ADMINISTRATION (NARA)

36 CFR 1191	Americans with Disabilities Act (ADA) Accessibility Guidelines for Buildings and Facilities; Architectural Barriers Act (ABA) Accessibility Guidelines

1.2 SUSTAINABILITY REQUIREMENTS

Materials in this technical specification may contribute towards contract compliance with sustainability requirements. See Section 01 33 29 SUSTAINABLE REPORTING for project LEED NC local/regional materials, low-emitting materials, and recycled content requirements for LEED Documentation.

1.3 SUBMITTALS

Government approval is required for submittals with a "G" designation; submittals not having a "G" designation are for Contractor Quality Control approval. When used, a designation following the "G" designation identifies the office that will review the submittal for the GovernmentSubmit the following in accordance with Section 01 33 00 SUBMITTAL PROCEDURES:

SD-02 Shop Drawings

Detail Drawings; G, ID NAVFAC MidLant Interior Design

SD-03 Product Data

Local/Regional Materials; (LEED NC)
Tile; G, ID NAVFAC MidLant Interior Design
Setting-Bed; G
Mortar, Grout, and Adhesive; (LEED NC); G, ID NAVFAC MidLant Interior Design

SD-04 Samples

Tile; G, ID NAVFAC MidLant Interior Design

Transition Strips; G, ID NAVFAC MidLant Interior Design
Grout; G, ID NAVFAC MidLant Interior Design

SD-07 Certificates

Tile
Mortar, Grout, and Adhesive

SD-08 Manufacturer's Instructions

Maintenance Instructions

SD-10 Operation and Maintenance Data

Installation; G

SD-11 Closeout Submittals

Local/Regional Materials; (LEED NC)
LEED Documentation
Tile; (LEED NC)
Adhesives; (LEED NC)

1.4 OTHER SUBMITTAL REQUIREMENTS

1.4.1 Local/Regional Materials

Submit documentation indicating distance between manufacturing facility and the project site and also the distance of raw material origin from the project site. For Tile indicate percentage of post-industrial and post-consumer recycled content per unit of product. Indicate relative dollar value of recycled content products to total dollar value of products included in project.

1.5 QUALITY ASSURANCE

Installers to be from a company specializing in performing this type of work and have a minimum of two years experience. Each type and color of tile to be provided from a single source. Each type and color of mortar, adhesive, and grout to be provided from the same source.

1.6 DELIVERY, STORAGE, AND HANDLING

Ship tiles in sealed packages and clearly marked with the grade, type of tile, producer identification, and country of origin. Deliver materials to the project site in manufacturer's original unopened containers with seals unbroken and labels and hallmarks intact. Protect materials from weather, and store them under cover in accordance with manufacturer's printed instructions.

1.7 ENVIRONMENTAL REQUIREMENTS

Do not perform ceramic tile work unless the substrate and ambient temperature is at least 50 degrees F and rising. Maintain temperature above 50 degrees F while the work is being performed and for at least 7 days after completion of the work. When temporary heaters are used, ventilate the area to the outside to avoid carbon dioxide damage to new tilework.

1.8 WARRANTY

Provide manufacturer's standard performance guarantees or warranties that

extend beyond a 1-year period.

1.9 EXTRA MATERIALS

Supply an extra 5 percent of each type tile used in clean and marked cartons.

PART 2 PRODUCTS

2.1 TILE

Furnish tiles that comply with ANSI A137.1 and are standard grade tiles. Provide a minimum breaking strength of 125 lbs. for wall tile and 250 lbs. for floor tile in accordance with ASTM C648. Provide floor tiles with a wet dynamic coefficient of friction (DCOF) value of 0.42 or greater when tested in accordance with ANSI A137.1 requirements. Provide glazed floor tile with a Class IV-Commercial classification as rated by the manufacturer when tested in accordance with ASTM C1027 for visible abrasion resistance as related to foot traffic. Indicate VOC content. For materials like tile, and transition strips submit samples of sufficient size to show color range, pattern, type and joints. Submit manufacturer's catalog data.

2.1.1 Porcelain Tile

Furnish porcelain tile per the finish schedule, base and trim pieces with color extending uniformly through the body of the tile. Blend tiles from packages to have same color range and continuous blend for installation. Provide nominal tile size(s) as indicated on the drawings. Provide a 0.50 percent maximum water absorption in accordance with ASTM C373.

2.2 SETTING-BED

Submit manufacturer's catalog data. Compose the setting-bed of the following materials:

2.2.1 Aggregate for Concrete Fill

Conform to ASTM C33/C33M for aggregate fill. Do not exceed one-half the thickness of concrete fill for maximum size of coarse aggregate.

2.2.2 Portland Cement

Conform to ASTM C150/C150M for cement, Type I, white for wall mortar and gray for other uses.

2.2.3 Sand

Conform to ASTM C144 for sand.

2.2.4 Hydrated Lime

Conform to ASTM C206 for hydrated lime, Type S or ASTM C207, Type S.

2.3 WATER

Provide potable water.

2.4 MORTAR, GROUT, AND ADHESIVE

Submit certificates indicating conformance with specified requirements. Submit LEED documentation relative to low-emitting materials credit in accordance with LEED GBDC. Include in LEED Documentation Notebook. Interior adhesives, sealants, primers and sealants used as filler must meet the requirements of LEED low emitting materials credit. Submit manufacturer's catalog data. Conform to the following for mortar, grout, adhesive, and sealant:

2.4.1 Latex-Portland Cement Mortar

TCNA Hdbk.

2.4.2 Sealants

Comply with applicable regulations regarding toxic and hazardous materials and as specified. Grout sealant must not change the color or alter the appearance of the grout.

2.4.3 Glass Mat Gypsum Backer Panel

Provide glass mat water-resistant gypsum backer board, for wall tile installation, in accordance with ASTM C1178/C1178M. Provide 1/2 inch thick glass mat gypsum backer board.

2.5 TRANSITION STRIPS

Provide transitions between tile and carpet or resilient flooring as indicated on the drawings. Provide marble transitions at tile to tile transitions at doorways. Categorize marble Group A as classified by MIA Design Manual. Provide a fine sand-rubbed finish marble, white or gray in color. Provide minimum 12.0 marble abrasion when tested in accordance with ASTM C241/C241M at tile to tile transitions at doorways. Provide transition strips that comply with 36 CFR 1191 requirements.

2.6 COLOR, TEXTURE, AND PATTERN

Provide color, pattern and texture in accordance with as indicatedon the drawings. Color listed is not intended to limit the selection of equal colors from other manufacturers. Provide floor patterns as specified on the drawings.

PART 3 EXECUTION

3.1 PREPARATORY WORK AND WORKMANSHIP

Inspect surface to receive tile in conformance to the requirements of TCNA Hdbk for surface conditions for the type setting bed specified and for workmanship. Provide variations of tiled surfaces that fall within maximum values shown below:

TYPE	WALLS	FLOORS
Latex Portland Cement Mortar	1/8 inch in 8 ft.	1/8 inch in 10 ft.

3.2 GENERAL INSTALLATION REQUIREMENTS

Do not start tile work until roughing in for mechanical and electrical work has been completed and tested, and built-in items requiring membrane waterproofing have been installed and tested. Close space, in which tile is being set, to traffic and other work. Keep closed until tile is firmly set. Do not start floor tile installation in spaces requiring wall tile until after wall tile has been installed. Apply tile in colors and patterns indicated in the area shown on the drawings. Install tile with the respective surfaces in true even planes to the elevations and grades shown. Solidly back tile bases and coves with mortar. Do not walk or work on newly tiled floors without using kneeling boards or equivalent protection of the tiled surface. Keep traffic off horizontal portland cement mortar installations for at least 72 hours. Keep all traffic off epoxy installed floors for at least 40 hours after grouting, and heavy traffic off for at least 7 days, unless otherwise specifically authorized by manufacturer. Dimension and draw detail drawings at a minimum scale of 1/4 inch = 1 foot. Include drawings of pattern at termination points and location of all equipment items such as thermostats, switch plates, mirrors and toilet accessories mounted on surface. Submit drawings showing ceramic tile pattern elevations and floor plans. Submit manufacturer's preprinted installation instructions.

3.3 INSTALLATION OF WALL TILE

Install wall tile in accordance with the TCNA Hdbk, method W248-14 and with grout joints of 1/8". Install thinner wall tile flush with thicker wall tile applied on same wall and provide installation materials as recommended by the tile and setting materials manufacturer's to achieve flush installation.

3.3.1 Latex-Portland Cement Mortar

Use Latex-Portland Cement to install tile in accordance with TCNA Hdbk. Use Latex Portland Cement when installing porcelain ceramic tile.

3.4 INSTALLATION OF FLOOR TILE

Install floor tile in accordance with TCNA Hdbk method F205-14 and with grout joints of 1/8" inch.

3.4.1 Cementitious Self-leveling Underlayment

For large format tiles, install floor tile over a cementitious self-leveling underlayment. Conform to TCNA Hdbk for materials and installation. Conform to TCNA Hdbk for cured mortar bed materials and installation.

3.4.2 Latex-Portland Cement

Use Latex-Portland cement mortar to install tile over properly cured, plane, clean concrete slabs in accordance with TCNA Hdbk. Use Latex Portland cement when installing porcelain ceramic tile.

3.4.3 Resinous Grout

When resinous grout is indicated, grout tile with expoy resin grout. Rake and clean joints to the full depth of the tile and neutralize when recommended by the resin manufacturer. Install epoxy resin grout in

conformance with TCNA Hdbk. Install resin grout in accordance with manufcaturer's printed installation instructions. Follow manufacturer's printed installation instructions of installed resin grout for proportioning, mixing, installing, and curing. Maintain the recommended temperature in the area and on the surface to be grouted. Protect finished grout of grout stain.

3.5 INSTALLATION OF TRANSITION STRIPS

Install transition strips where indicated, in a manner similar to that of the ceramic tile floor and as recommended by the manufacturer. Provide thresholds full width of the opening.

3.6 EXPANSION JOINTS

Provide movement joints where tile abuts restraining conditions, such as at floor and columns, and elsewhere as recommended by the Tile Council of North America. Seal movement joints in vertical surfaces with single- or multi-component urethane sealer, ASTM C920, use NT. Color of sealant shall match grout. Provide stainless steel edge trim with flanges bonded in the mortar coat where indicated in the drawings.

3.6.1 Walls

Provide expansion joints at control joints in backing material. Wherever backing material changes, install an expansion joint to separate the different materials.

3.6.2 Floors

Provide expansion joints over construction joints, control joints, and expansion joints in concrete slabs. Provide expansion joints where tile abuts restraining surfaces such as perimeter walls, curbs and columns. Extend expansion joints through setting-beds and fill.

3.7 CLEANING AND PROTECTING

Upon completion, thoroughly clean tile surfaces in accordance with manufacturer's approved cleaning instructions. Do not use acid for cleaning glazed tile. Clean floor tile with resinous grout or with factory mixed grout in accordance with printed instructions of the grout manufacturer. After the grout has set, provide a protective coat of a noncorrosive soap or other approved method of protection for tile wall surfaces. Cover tiled floor areas with building paper before foot traffic is permitted over the finished tile floors. Provide board walkways on tiled floors that are to be continuously used as passageways by workmen. Replace damaged or defective tiles. Submit copy of manufacturer's printed maintenance instructions.

-- End of Section --

THIS PAGE HAS BEEN INTENTIONALLY LEFT BLANK

SECTION 09 51 00

ACOUSTICAL CEILINGS
08/10

PART 1 GENERAL

1.1 REFERENCES

The publications listed below form a part of this specification to the extent referenced. The publications are referred to within the text by the basic designation only.

ASTM INTERNATIONAL (ASTM)

ASTM A1008/A1008M	(2015) Standard Specification for Steel, Sheet, Cold-Rolled, Carbon, Structural, High-Strength Low-Alloy and High-Strength Low-Alloy with Improved Formability, Solution Hardened, and Bake Hardened
ASTM A489	(2012) Standard Specification for Carbon Steel Lifting Eyes
ASTM A580/A580M	(2013b) Standard Specification for Stainless Steel Wire
ASTM A653/A653M	(2015) Standard Specification for Steel Sheet, Zinc-Coated (Galvanized) or Zinc-Iron Alloy-Coated (Galvannealed) by the Hot-Dip Process
ASTM B633	(2013) Standard Specification for Electrodeposited Coatings of Zinc on Iron and Steel
ASTM C423	(2009a) Sound Absorption and Sound Absorption Coefficients by the Reverberation Room Method
ASTM C635/C635M	(2013a) Manufacture, Performance, and Testing of Metal Suspension Systems for Acoustical Tile and Lay-In Panel Ceilings
ASTM C636/C636M	(2013) Standard Practice for Installation of Metal Ceiling Suspension Systems for Acoustical Tile and Lay-In Panels
ASTM C834	(2014) Latex Sealants
ASTM E1264	(2008; E 2010) Acoustical Ceiling Products
ASTM E1414/E1414M	(2011a) Airborne Sound Attenuation Between Rooms Sharing a Common Ceiling Plenum
ASTM E1477	(1998a; R 2013) Luminous Reflectance Factor of Acoustical Materials by Use of

	Integrating-Sphere Reflectometers
ASTM E580/E580M	(2014) Application of Ceiling Suspension Systems for Acoustical Tile and Lay-In Panels in Areas Requiring Moderate Seismic Restraint
ASTM E795	(2005; R 2012) Mounting Test Specimens During Sound Absorption Tests

U.S. DEPARTMENT OF DEFENSE (DOD)

UFC 3-310-04	(2013) Seismic Design for Buildings

UNDERWRITERS LABORATORIES (UL)

UL Fire Resistance	(2014) Fire Resistance Directory

1.2 SYSTEM DESCRIPTION

Provide sound controlling units mechanically mounted on a ceiling suspension system for acoustical treatment. The unit size, texture, finish, and color must be as specified. The location and extent of acoustical treatment shall be as shown on the approved detail drawings. Submit drawings showing suspension system, method of anchoring and fastening, details, and reflected ceiling plan. Coordinate with paragraph RECLAMATION PROCEDURES for reclamation of mineral fiber acoustical ceiling panels to be removed from the job site.

1.2.1 Ceiling Attenuation Class and Test

Provide a ceiling system with an attenuation class (CAC) of 35 for ACT-2 and ACT-3 when determined in accordance with ASTM E1414/E1414M. Provide fixture attenuators over light fixtures and other ceiling penetrations, and provide acoustical blanket insulation adjacent to partitions, as required to achieve the specified CAC. Provide test ceiling continuous at the partition and assembled in the suspension system in the same manner that the ceiling will be installed on the project.

1.2.2 Ceiling Sound Absorption

Determine the Noise Reduction Coefficient (NRC) in accordance with ASTM C423 Test Method.

1.2.3 Light Reflectance

Determine light reflectance factor in accordance with ASTM E1477 Test Method.

1.2.4 Other Submittals Requirements

The following shall be submitted:

a. Manufacturer's data indicating percentage of recycle material in acoustic ceiling tiles to verify affirmative procurement compliance.

b. Total weight and volume quantities of acoustic ceiling tiles with recycle material.

c. Manufacturer's catalog showing UL classification of fire-rated ceilings giving materials, construction details, types of floor and roof constructions to be protected, and UL design number and fire protection time rating for each required floor or roof construction and acoustic ceiling assembly.

d. Reports by an independent testing laboratory attesting that acoustical ceiling systems meet specified sound transmission requirements. Data attesting to conformance of the proposed system to Underwriters Laboratories requirements for the fire endurance rating listed in UL Fire Resistance may be submitted in lieu of test reports.

e. Certificate attesting that the mineral based acoustical units furnished for the project contain recycled material and showing an estimated percent of such material.

1.3 SUBMITTALS

Government approval is required for submittals with a "G" designation; submittals not having a "G" designation are for Contractor Quality Control approval. When used, a designation following the "G" designation identifies the office that will review the submittal for the Government. Submittals with an "S" are for inclusion in the Sustainability Notebook, in conformance to Section 01 33 29SUSTAINABILITY REQUIREMENTS. Submit the following in accordance with Section 01 33 00 SUBMITTAL PROCEDURES:

SD-02 Shop Drawings

Approved Detail Drawings

SD-03 Product Data

Acoustical Ceiling Systems
Suspension System; G, ID NAVFAC MidLant Interior Design
Acoustical Clouds Suspended Ceiling System; G, ID NAVFAC MidLant Interior Design

SD-04 Samples

Acoustical Units; G, ID NAVFAC MidLant Interior Design;
Acoustic Ceiling Tiles

SD-06 Test ReportsCeiling Attenuation Class and Test

SD-07 Certificates

Acoustical Units
Acoustic Ceiling Tiles

1.4 DELIVERY, STORAGE. AND HANDLING

Deliver materials to the site in the manufacturer's original unopened containers with brand name and type clearly marked. Carefully handle and store materials in dry, watertight enclosures. Immediately before installation, store acoustical units for not less than 24 hours at the same temperature and relative humidity as the space where they will be installed in order to assure proper temperature and moisture acclimation.

1.5 ENVIRONMENTAL REQUIREMENTS

Maintain a uniform temperature of not less than 60 degrees F nor more than 85 degrees F and a relative humidity of not more than 70 percent for 24 hours before, during, and 24 hours after installation of acoustical units.

1.6 SCHEDULING

Complete and dry interior finish work such as plastering, concrete and terrazzo work before ceiling installation. Complete mechanical, electrical, and other work above the ceiling line; install and start operating heating, ventilating, and air conditioning systems in order to maintain temperature and humidity requirements.

1.7 WARRANTY

Provide manufacturer's standard performance guarantees or warranties that extend beyond a one year period. Include an agreement to repair or replace acoustical panels that fail within the warranty period in the standard performance guarantee or warranty. Failures include, but are not limited to, sagging and warping of panels; rusting and manufacturers defects of grid system.

1.8 EXTRA MATERIALS

Furnish spare tiles, from the same lot as those installed, of each color at the rate of 5 percent for each type of tile installed.

PART 2 PRODUCTS

2.1 ACOUSTICAL UNITS

Comply with EPA requirements in accordance with Section 01 33 29 SUSTAINABILITY REPORTING. Submit two samples of each type of acoustical unit and each type of suspension grid tee section showing texture, finish, and color. Conform acoustical units to ASTM E1264, Class A, and the following requirements:

2.1.1 Affirmative Procurement

Mineral Wool, Cellulose, and Laminated Paperboard used in acoustic ceiling tiles are materials listed in the EPA's Comprehensive Procurement Guidelines (CPG) (http://www.epa.gov/cpg/). EPA's recommended Recovered Materials Content Levels for Mineral Wool, Cellulose, Structural Fiberboard and Laminated Paperboard are:

Product	Material	Percent of Post Consumer Materials	Percent of Total Recovered Materials
Laminate Paperboard	Post Consumer Paper	100	100
Rock Wool	Slag	75	
Cellulose	Post Consumer Paper	75	75

a. The recommended recovered materials content levels are based on the weight (not volume) of materials in the insulating core only.

b. Submit recycled material content data for acoustic ceiling tiles indicating compliance with affirmative procurement.

c. Submit total weight and volume quantities of acoustic ceiling tiles with recycle material.

2.1.2 Units for Exposed-Grid System ACT-2

2.1.2.1 Type

IV (non-asbestos mineral fiber with membrane-faced overlay)

2.1.2.2 Flame Spread

Class A, 25 or less

2.1.2.3 Pattern

E

2.1.2.4 Minimum NRC

0.70 in locations as identified on the Finish Schedule and areas when tested on mounting Type E-400 of ASTM E795.

2.1.2.5 Minimum Light Reflectance Coefficient

0.90

2.1.2.6 Nominal Size

24 x 24 inch

2.1.2.7 Edge Detail

Square

2.1.2.8 Finish

Factory-applied color finish.

2.1.2.9 Minimum CAC

35

2.1.3 Units for Exposed-Grid System (Acoustical Clouds) ACT-3

2.1.3.1 Type

IV (non-asbestos mineral fiber with membrane-faced overlay)

2.1.3.2 Flame Spread

Class A, 25 or less

2.1.3.3 Pattern

E

2.1.3.4 Minimum NRC

0.70 in locations as identified on the Finish Schedule and areas when tested on mounting Type E-400 of ASTM E795.

2.1.3.5 Minimum Light Reflectance Coefficient

0.90

2.1.3.6 Nominal Size

24 x 24 inch

2.1.3.7 Edge Detail

Square

2.1.3.8 Finish

Factory-applied color finish, white.

2.1.3.9 Minimum CAC

35

2.1.4 Acoustical Clouds Suspended Ceiling System (ACT-3)

Rectangular shaped suspended ceiling system shall be from manufacturers standard product line. All associated products from a single source. Minimum 25% overall recycled content.

a. Overall Cloud Size: 14' x 14' square
b. Frame Thickness: 6 inch
c. Frame Detail: Square Edge Detail for Straight Applications
d. Suspension System: 15/16" exposed grid suspension system
e. Trim Color: White
f. Attachement System: Suspended Lay-In Panels Via Cables Attached to Structure

2.2 SUSPENSION SYSTEM (ACT-2)

Provide standard exposed-grid standard width flange as shown on drawings suspension system conforming to ASTM C635/C635M for intermediate-duty systems. Provide surfaces exposed to view of aluminum or steel with a factory-applied white baked-enamel finish. Provide wall molding having a flange of not less than 15/16 inch. Provide inside and outside corner capsmitered corners. Suspended ceiling framing system must have the capability to support the finished ceiling, light fixtures, air diffusers, and accessories, as shown. Provide a suspension system with a maximum deflection of 1/360 of the span length. Conform seismic details to the guidance in UFC 3-310-04 and ASTM E580/E580M.

2.3 HANGERS

Provide hangers and attachment capable of supporting a minimum 300 pound ultimate vertical load without failure of supporting material or attachment.

2.3.1 Wires

Conform wires to ASTM A580/A580M, composition 302 or 304, condition annealed stainless steel, 0.11 inch in diameter.

2.3.2 Straps

Provide straps of 1 by 3/16 inch galvanized steel conforming to ASTM A653/A653M, with a light commercial zinc coating or ASTM A1008/A1008M with an electrodeposited zinc coating conforming to ASTM B633, Type RS.

2.3.3 Rods

Provide 3/16 inch diameter threaded steel rods, zinc or cadmium coated.

2.3.4 Eyebolts

Provide eyebolts of weldless, forged-carbon-steel, with a straight-shank in accordance with ASTM A489. Eyebolt size must be a minimum 1/4 inch, zinc coated.

2.3.5 Masonry Anchorage Devices

Comply with ASTM C636/C636M for anchorage devices for eyebolts and machine screws.

2.4 ACCESS PANELS

Provide access panels that match adjacent acoustical units, designed and equipped with suitable framing and fastenings for removal and replacement without damage. Size panel to be not less than 12 by 12 inch or more than 12 by 24 inch.

a. Attach an identification plate of 0.032 inch thick aluminum, 3/4 inch in diameter, stamped with the letters "AP" and finished the same as the unit, near one corner on the face of each access panel.

2.5 ADHESIVE

Use LEED compliant adhesive as recommended by tile manufacturer.

2.6 FINISHES

Use manufacturer's standard textures, patterns and finishes as specified for acoustical units and suspension system members. Treat ceiling suspension system components to inhibit corrosion.

2.7 COLORS AND PATTERNS

Use colors and patterns for acoustical units and suspension system components as indicated on the Finish Schedule.

2.8 ACOUSTICAL SEALANT

Conform acoustical sealant to ASTM C834, nonstaining.

PART 3 EXECUTION

3.1 INSTALLATION

Examine surfaces to receive directly attached acoustical units for unevenness, irregularities, and dampness that would affect quality and execution of the work. Rid areas, where acoustical units will be cemented, of oils, form residue, or other materials that reduce bonding capabilities of the adhesive. Complete and dry interior finish work such as plastering, concrete, and terrazzo work before installation. Complete and approve mechanical, electrical, and other work above the ceiling line prior to the start of acoustical ceiling installation. Provide acoustical work complete with necessary fastenings, clips, and other accessories required for a complete installation. Do not expose mechanical fastenings in the finished work. Lay out hangers for each individual room or space. Provide hangers to support framing around beams, ducts, columns, grilles, and other penetrations through ceilings. Keep main runners and carrying channels clear of abutting walls and partitions. Provide at least two main runners for each ceiling span. Wherever required to bypass an object with the hanger wires, install a subsuspension system so that all hanger wires will be plumb.

3.1.1 Suspension System

Install suspension system in accordance with ASTM C636/C636M and as specified herein. Do not suspend hanger wires or other loads from underside of steel decking.

3.1.1.1 Plumb Hangers

Install hangers plumb and not pressing against insulation covering ducts and pipes. Where lighting fixtures are supported from the suspended ceiling system, provide hangers at a minimum of four hangers per fixture and located not more than 6 inch from each corner of each fixture.

3.1.1.2 Splayed Hangers

Where hangers must be splayed (sloped or slanted) around obstructions, offset the resulting horizontal force by bracing, countersplaying, or other acceptable means.

3.1.2 Wall Molding

Provide wall molding where ceilings abut vertical surfaces. Miter corners where wall moldings intersect or install corner caps. Secure wall molding not more than 3 inch from ends of each length and not more than 16 inch on centers between end fastenings. Provide wall molding springs at each acoustical unit in semi-exposed or concealed systems.

3.1.3 Acoustical Units

Install acoustical units in accordance with the approved installation instructions of the manufacturer. Ensure that edges of acoustical units are in close contact with metal supports, with each other, and in true alignment. Arrange acoustical units so that units less than one-half width are minimized. Hold units in exposed-grid system in place with manufacturer's standard hold-down clips, if units weigh less than 1 psf or if required for fire resistance rating.

3.1.4 Caulking

Seal all joints around pipes, ducts or electrical outlets penetrating the ceiling. Apply a continuous ribbon of acoustical sealant on vertical web of wall or edge moldings.

3.1.5 Adhesive Application

Wipe back of tile to remove accumulated dust. Daub acoustical units on back side with four equal daubs of adhesive. Apply daubs near corners of tiles. Ensure that contact area of each daub is at least 2 inch diameter in final position. Press units into place, aligning joints and abutting units tight and uniform without differences in joint widths.

3.2 CEILING ACCESS PANELS

Locate ceiling access panels directly under the items which require access.

3.3 CLEANING

Following installation, clean dirty or discolored surfaces of acoustical units and leave them free from defects. Remove units that are damaged or improperly installed and provide new units as directed.

3.4 RECLAMATION PROCEDURES

Neatly stack ceiling tile, designated for recycling by the Contracting Officer, on 4 by 4 foot pallets not higher than 4 foot. Panels must be completely dry. Shrink wrap and symmetrically stack pallets on top of each other without falling over.

-- End of Section --

SECTION 09 65 00

RESILIENT FLOORING
08/10

PART 1 GENERAL

1.1 REFERENCES

The publications listed below form a part of this specification to the extent referenced. The publications are referred to within the text by the basic designation only.

ASTM INTERNATIONAL (ASTM)

ASTM D4078	(2002; R 2008) Water Emulsion Floor Polish
ASTM E648	(2010; E 2011) Standard Test Method for Critical Radiant Flux of Floor-Covering Systems Using a Radiant Heat Energy Source
ASTM F1700	(2013a) Solid Vinyl Floor Tile
ASTM F1861	(2008; E 2012; R 2012) Resilient Wall Base
ASTM F1869	(2011) Measuring Moisture Vapor Emission Rate of Concrete Subfloor Using Anhydrous Calcium Chloride
ASTM F2170	(2011) Determining Relative Humidity in Concrete Floor Slabs in situ Probes
ASTM F710	(2011) Standard Practice for Preparing Concrete Floors to Receive Resilient Flooring

NATIONAL FIRE PROTECTION ASSOCIATION (NFPA)

NFPA 253	(2011) Standard Method of Test for Critical Radiant Flux of Floor Covering Systems Using a Radiant Heat Energy Source

U.S. GREEN BUILDING COUNCIL (USGBC)

LEED BD+C	(2009; R 2010) Leadership in Energy and Environmental Design(tm) Building Design and Construction (LEED-NC)

1.2 SYSTEM DESCRIPTION

1.2.1 Fire Resistance Requirements

Provide a critical radiant flux of not less than 0.45 watts per square centimeter (Class 1) for flooring in corridors and exits when tested in accordance with ASTM E648 or NFPA 253.

THIS PAGE HAS BEEN INTENTIONALLY LEFT BLANK

1.2.2 Other Submittal Requirements

The following shall be submitted in accordance with LEED BD+C:

a. Documentation indicating percentage of post-industrial and post-consumer recycled content per unit of product. Indicate relative dollar value of recycled content products to total dollar value of products included in project.

b. Documentation indicating distance between manufacturing facility and the project site. Indicate distance of raw material origin from the project site. Indicate relative dollar value of local/regional materials to total dollar value of products included in project.

c. Documentation indicating type of biobased material in product and biobased content. Indicate relative dollar value of biobased content products to total dollar value of products included in project.

1.3 SUSTAINABILITY REPORTING

Materials in this technical specification may contribute towards contract compliance with sustainability requirements. See Section 01 33 29 SUSTAINABILITY REPORTING for project LEED BD+C local/regional materials, low-emitting materials, and recycled content, for LEED documentation requirements.

1.4 SUBMITTALS

Government approval is required for submittals with a "G" designation; submittals not having a "G" designation are for Contractor Quality Control approval. When used, a designation following the "G" designation identifies the office that will review the submittal for the Government.Submit the following in accordance with Section 01 33 00 SUBMITTAL PROCEDURES:

SD-02 Shop Drawings

Resilient Flooring and Accessories; G, ID NAVFAC Midlant Interior Design

SD-03 Product Data

Resilient Flooring and Accessories; G, ID NAVFAC Midlant Interior Design
Adhesives; (LEED BD+C)
Luxury Vinyl Tile
Wall Base
Local/Regional Materials

SD-04 Samples

Resilient Flooring and Accessories; G, ID NAVFAC Midlant Interior Design

SD-06 Test Reports

Moisture, Alkalinity and Bond Tests; G

SD-08 Manufacturer's Instructions

Surface Preparation; G
Installation; G

SD-10 Operation and Maintenance Data

Resilient Flooring and Accessories; G

SD-11 Closeout Submittals

LEED Documentation; G

1.5 DELIVERY, STORAGE, AND HANDLING

Deliver materials to the building site in original unopened containers bearing the manufacturer's name, style name, pattern color name and number, production run, project identification, and handling instructions. Store materials in a clean, dry, secure, and well-ventilated area free from strong contaminant sources and residues with ambient air temperature maintained above 68 degrees F and below 85 degrees F, stacked according to manufacturer's recommendations. Remove resilient flooring products from packaging to allow ventilation prior to installation. Protect materials from the direct flow of heat from hot-air registers, radiators and other heating fixtures and appliances. Observe ventilation and safety procedures specified in the MSDS. Do not store rubber surface products with materials that have a high capacity to adsorb volatile organic compound (VOC) emissions. Do not store exposed rubber surface materials in occupied spaces. Do not store near materials that may offgas or emit harmful fumes, such as kerosene heaters, fresh paint, or adhesives.

1.6 ENVIRONMENTAL REQUIREMENTS

Maintain areas to receive resilient flooring at a temperature above 68 degrees F and below 85 degrees F for 3 days before application, during application and 2 days after application, unless otherwise directed by the flooring manufacturer for the flooring being installed. Maintain a minimum temperature of 55 degrees F thereafter. Provide adequate ventilation to remove moisture from area and to comply with regulations limiting concentrations of hazardous vapors.

1.7 SCHEDULING

Schedule resilient flooring application after the completion of other work which would damage the finished surface of the flooring.

1.8 WARRANTY

Provide manufacturer's standard performance guarantees or warranties that extend beyond a one year period.

1.9 EXTRA MATERIALS

Provide extra 5 percent flooring material of each color and pattern atinstalled. Provide extra wall base material composed of 20 linear feet of each type, color and pattern. Package all extra materials in original properly marked containers bearing the manufacturer's name, brand name, pattern color name and number, production run, and handling instructions. Provide extra materials from the same lot as those installed. Leave extra stock at the site in location assigned by Contracting Officer.

PART 2 PRODUCTS

2.1 LUXURY VINYL TILE

Conform to ASTM F1700 Class III printed film minimum wear layer thickness 0.020 mm and minimum overall thicknessof 2.5 mm. Providesizes and styles as indicated on the drawings.

2.2 WALL BASE

Conform to ASTM F1861, Type TS (vulcanized thermoset rubber); Style B (coved - to be installed with resilient flooring and carpet.) Provide 4 inch high and a minimum 1/8 inch thick wall base. Provide job formed corners in matching height, shape, and color.

2.3 TRANSITIONS

Provide transitions as specified on the drawings and types as recommended by flooring manufacturer for both edges and transitions of flooring materials specified. Provide vertical lip on moulding of maximum 1/4 inch. Provide bevel change in level between 1/4 and 1/2 inch with a slope no greater than 1:2.

2.4 ADHESIVES

Provide adhesives for flooring, base and accessories as recommended by the manufacturer and comply with local indoor air quality standards. VOC content shall be less than 50 grams/L. Submit manufacturer's descriptive data, documentation stating physical characteristics, and mildew and germicidal characteristics.

2.5 SURFACE PREPARATION MATERIALS

Provide surface preparation materials, such as underlayment, and floor crack fillers as recommended by the flooring manufacturer for the subfloor conditions.

2.6 POLISH/FINISH

Provide polish finish as recommended by the manufacturer and conform to ASTM D4078 for polish.

2.7 CAULKING AND SEALANTS

Provide caulking and sealants in accordance with Section 07 92 00 JOINT SEALANTS.

2.8 MANUFACTURER'S COLOR, PATTERN AND TEXTURE

Provide color, pattern and texture for resilient flooring and accessories as indicated on the drawings. Color listed is not intended to limit the selection of equal colors from other manufacturers. Provide flooring in any one continuous area or replacement of damaged flooring in continuous area from same production run with same shade and pattern. Submit scaled drawings indicating patterns (including location of patterns and colors) and dimensions. Submit manufacturer's descriptive data and three samples of each indicated color and type of flooring, base, mouldings, and accessories sized a minimum 2-1/2 by 4 inch. Submit Data Package 1 in accordance with Section 01 78 23 OPERATION AND MAINTENANCE DATA and

Section 01 78 24.00 20 FACILITY ELECTRONIC OPERATION AND MAINTENANCE SUPPORT INFORMATION (eOMSI).

PART 3 EXECUTION

3.1 EXAMINATION

Examine and verify that site conditions are in agreement with the design package. Report all conditions that will prevent a proper installation. Do not take any corrective action without written permission from the Government. Work will proceed only when conditions have been corrected and accepted by the installer. Submit manufacturer's printed installation instructions for all flooring materials and accessories, including preparation of substrate, seaming techniques, and recommended adhesives.

3.2 SURFACE PREPARATION

Provide a smooth, true, level plane for surface preparation of the flooring, except where indicated as sloped. Floor to be flat to within 3/16 inch in 10 feet. Prepare subfloor in accordance with flooring manufacturer's recommended instructions. Prepare the surfaces of lightweight concrete slabs (as defined by the flooring manufacturer) as recommended by the flooring manufacturer. Comply with ASTM F710 for concrete subfloor preparation. Floor fills or toppings may be required as recommended by the flooring manufacturer. Install underlayments, when required by the flooring manufacturer, in accordance with manufacturer's recommended printed installation instructions. Before any work under this section is begun, correct all defects such as rough or scaling concrete, chalk and dust, cracks, low spots, high spots, and uneven surfaces. Repair all damaged portions of concrete slabs as recommended by the flooring manufacturer. Remove concrete curing and sealer compounds from the slabs, other than the type that does not adversely affect adhesion. Remove paint, varnish, oils, release agents, sealers, waxes, and adhesives, as required by the flooring product in accordance with manufacturer's printed installation instructions.

3.3 MOISTURE, ALKALINITY AND BOND TESTS

Determine the suitability of the concrete subfloor for receiving the resilient flooring with regard to moisture content and pH level by moisture and alkalinity tests. Conduct moisture testing in accordance with ASTM F1869 or ASTM F2170, unless otherwise recommended by the flooring manufacturer. Conduct alkalinity testing as recommended by the flooring manufacturer. Determine the compatibility of the resilient flooring adhesives to the concrete floors by a bond test in accordance with the flooring manufacturer's recommendations. Submit copy of test reports for moisture and alkalinity content of concrete slab, and bond test stating date of test, person conducting the test, and the area tested.

3.4 PLACING LUXURY VINYL TILES

Install tile flooring and accessories in accordance with manufacturer's printed installation instructions. Prepare and apply adhesives in accordance with manufacturer's directions. Keep tile lines and joints square, symmetrical, tight, and even. Keep each floor in true, level plane, except where slope is indicated. Follow floor patterns as indicated on the drawings. Cut flooring to fit around all permanent fixtures, built-in furniture and cabinets, pipes, and outlets. Cut, fit, and scribe edge tile to walls and partitions after field flooring has been applied.

3.5 PLACING TRANSITIONS

Provide transitons where flooring termination is higher than the adjacent finished flooring and at transitions between different flooring materials. When required, locate transition under door centerline. Transitions are not required at doorways where thresholds are provided. Secure transitions as recommended by the manufacturer. Where required, prepare and apply adhesives in accordance with manufacturer's printed directions.Anchor aluminum transitions to floor surfaces as recommended by the manufacturer.

3.6 PLACING WALL BASE

Install wall base in accordance with manufacturer's printed installation instructions. Prepare and apply adhesives in accordance with manufacturer's printed directions. Tighten base joints and make even with adjacent resilient flooring. Fill voids along the top edge of base at masonry walls with caulk. Roll entire vertical surface of base with hand roller, and press toe of base with a straight piece of wood to ensure proper alignment. Avoid excess adhesive in corners.

3.7 CLEANING

Immediately upon completion of installation of flooring in a room or an area, dry/clean the flooring and adjacent surfaces to remove all surplus adhesive. Clean flooring as recommended in accordance with manufacturer's printed maintenance instructions and within the recommended time frame. As required by the manufacturer, apply the recommended number of coats and type of polish and/or finish in accordance with manufacturer's written instructions.

3.8 PROTECTION

From the time of installation until acceptance, protect flooring from damage as recommended by the flooring manufacturer. Remove and replace flooring which becomes damaged, loose, broken, or curled and wall base which is not tight to wall or securely adhered.

-- End of Section --

SECTION 09 68 00

CARPETING
11/13

PART 1 GENERAL

1.1 REFERENCES

The publications listed below form a part of this specification to the extent referenced. The publications are referred to within the text by the basic designation only.

AMERICAN ASSOCIATION OF TEXTILE CHEMISTS AND COLORISTS (AATCC)

AATCC 107	(2013) Colorfastness to Water
AATCC 134	(2011; E 2013) Electrostatic Propensity of Carpets
AATCC 16	(2004; E 2010) Colorfastness to Light

ASTM INTERNATIONAL (ASTM)

ASTM D1335	(2012) Standard Test Method for Tuft Bind of Pile Yarn Floor Coverings
ASTM D1667	(2005; R 2011) Flexible Cellular Materials - Poly (Vinyl Chloride) Foam (Closed-Cell)
ASTM D297	(2015) Rubber Products - Chemical Analysis
ASTM D3278	(1996; R 2011) Flash Point of Liquids by Small Scale Closed-Cup Apparatus
ASTM D3676	(2013) Rubber Cellular Cushion Used for Carpet or Rug Underlay
ASTM D5793	(2013) Binding Sites Per Unit Length or Width of Pile Yarn Floor Coverings
ASTM D5848	(2010; E 2010) Mass Per Unit Area of Pile Yarn Floor Coverings
ASTM D6859	(2011) Standard Test Method for Pile Thickness of Finished Level Pile Yarn Floor Coverings
ASTM E648	(2010; E 2011) Standard Test Method for Critical Radiant Flux of Floor-Covering Systems Using a Radiant Heat Energy Source

CARPET AND RUG INSTITUTE (CRI)

CRI CIS	(2011) Carpet Installation Standard

INTERNATIONAL ORGANIZATION FOR STANDARDIZATION (ISO)

ISO 2551	(1981) Machine-made Textile Floor Coverings - Determination of Dimensional Changes Due to the Effects of Varied Water and Heat Conditions

U.S. GREEN BUILDING COUNCIL (USGBC)

LEED BD+C	(2009; R 2010) Leadership in Energy and Environmental Design(tm) Building Design and Construction (LEED-NC)

U.S. NATIONAL ARCHIVES AND RECORDS ADMINISTRATION (NARA)

16 CFR 1630	Standard for the Surface Flammability of Carpets and Rugs (FF 1-70)
40 CFR 247	Comprehensive Procurement Guideline for Products Containing Recovered Materials

1.2 SYSTEM DESCRIPTION

1.2.1 Local/Regional Materials

Submit documentation indicating distance between manufacturing facility and the project site. Indicate distance of raw material origin from the project site. Indicate relative dollar value of local/regional materials to total dollar value of products included in project.

1.2.2 Environmental Data

Submit documentation indicating type of biobased material in product and biobased content. Indicate relative dollar value of biobased content products to total dollar value of products included in project. Submit documentation indicating relative dollar value of rapidly renewable materials to total dollar value of products included in project.

1.2.3 Scheduling

Install carpet systems after the installation and ventilation period of materials or finishes which have high short-term emissions of VOCs, formaldehyde, particulates, or other air-borne compounds which may be adsorbed by or settle on the carpet tiles.

1.3 SUSTAINABILITY REPORTING

Materials in this technical specification may contribute towards contract compliance with sustainability requirements. See Section 01 33 29 SUSTAINABILITY REPORTING for project LEED BD+C local/regional materials, low-emitting materials, and recycled content, for LEED documentation requirements.

1.4 SUBMITTALS

Government approval is required for submittals with a "G" designation; submittals not having a "G" designation are for Contractor Quality Control approval. When used, a designation following the "G" designation identifies the office that will review the submittal for the Government.Submit the

following in accordance with Section 01 33 00 SUBMITTAL PROCEDURES:

SD-02 Shop Drawings

Installation Drawings; G,ID NAVFAC Midlant Interior Design
Transitions; G,ID NAVFAC Midlant Interior Design

SD-03 Product Data

Carpet; G,ID NAVFAC Midlant Interior Design
Carpet Cushion; G, ID NAVFAC Midlant Interior Design
Transitions; G, ID NAVFAC Midlant Interior Design
Physical Characteristics; (LEED BD+C)
Local/Regional Materials; (LEED BD+C)
Environmental Data

SD-04 Samples

Carpet; G, ID NAVFAC Midlant Interior Design
Transitions; G, ID NAVFAC Midlant Interior Design
Carpet Cushion; G, ID NAVFAC Midlant Interior Design

SD-06 Test Reports

Moisture and Alkalinity Tests; G

SD-07 Certificates

Carpet
Regulatory Requirements

SD-08 Manufacturer's Instructions

Surface Preparation
Installation

SD-10 Operation and Maintenance Data

Carpet; G
Cleaning and Protection; G
Maintenance Service

SD-11 Closeout Submittals

LEED Documentation; G
Local/Regional Materials; (LEED BD+C); G

1.5 QUALITY ASSURANCE

Provide the Carpet and Rug Institute (CRI) Indoor Air Quality (IAQ) label for carpet, carpet cushion, and adhesives or demonstrate compliance with testing criteria and frequencies through independent laboratory test results. Carpet, carpet cushion, and adhesives bearing the label will indicate that the carpet has been tested and meets the Regulatory Requirements and criteria of the CRI IAQ Carpet Testing Program, and minimizes the impact on indoor air quality. Procure carpet in accordance with 40 CFR 247, and where possible, purchased locally to reduce emissions of fossil fuels from transporting. Conform to EPA requirements in accordance with Section 01 33 29 SUSTAINABILITY REPORTING for carpet.

Submit certificates, showing conformance with the referenced standards contained in this section, for the following: Carpet, Carpet Cushion and Molding. Include in the report percentage of post-industrial and post-consumer recycled material and relative dollar value of recycled content products to total dollar value of products included in project.

1.6 DELIVERY, STORAGE, AND HANDLING

Deliver materials to the site in the manufacturer's original wrappings and packages clearly labeled with the manufacturer's name, brand name, size, dye lot number, and related information. Remove materials from packaging and store them in a clean, dry, well ventilated area (100 percent outside air supply, minimum of 1.5 air changes per hour, and no recirculation), protected from damage, soiling, and moisture, and strong contaminant sources and residues, and maintain at a temperature above 60 degrees F for 2 days prior to installation. Do not store carpet or carpet tiles with materials which have high emissions of volatile organic compounds (VOCs) or other contaminants. Do not store carpet near materials that may off gas or emit harmful fumes, such as kerosene heaters, fresh paint, or adhesives.

1.7 AMBIENT CONDITIONS

Maintain areas in which carpeting is to be installed at a temperature above 60 degrees F and below 90 degrees F for 2 days before installation, during installation, and for 2 days after installation. Provide temporary ventilation during work of this section. Maintain a minimum temperature of 55 degrees F thereafter for the duration of the contract.

1.8 WARRANTY

Provide manufacturer's standard performance guarantees or warranties including .lifetime limited warranty against wear, static protection, and delamination.

PART 2 PRODUCTS

2.1 CARPET

Furnish first quality carpet; free of visual blemishes, streaks, poorly dyed areas, fuzzing of pile yarn, spots or stains, and other physical and manufacturing defects. Provide carpet materials and treatments as reasonably nonallergenic and free of other recognized health hazards. Provide a static control construction on all grade carpets which gives adequate durability and performance. Submit manufacturer's catalog data and printed documentation stating physical characteristics, durability, resistance to fading, and flame resistance characteristics for each type of carpet material and installation accessory. Submit manufacturer's catalog data for 1) Carpet, 2) Carpet Cushion, and 3) Moldings. Also, submit samples of the following:

a. Carpet: Two "Production Quality" samples 24 by 24 inches of each carpet proposed for use, showing quality, pattern, and color specified

b. Transitions: Two pieces of each type at least 6inches long

2.1.1 Physical Characteristics for Modular Tile Carpet

2.1.1.1 Carpet Construction

Tufted

2.1.1.2 Type

Modular tile 24 by 24 inch square with 0.15 percent growth/shrink rate in accordance with ISO 2551.

2.1.1.3 Pile Type

CPT-1: Tip Sheared, Patterned Loop; CPT-2: Tip-Sheared loop

2.1.1.4 Pile Fiber

Commercial 100 percent branded (federally registered trademark) nylon continuous filament. CPT-2 to include Scraper Fiber.

2.1.1.5 Gauge or Pitch

Minimum 1/10 inch in accordance with ASTM D5793

2.1.1.6 Stitches or Rows/Wires

Minimum 10 per square inch

2.1.1.7 Surface Pile Weight

Minimum CPT-1: 23 ounces per square yard; CPT-2: 32 oz/sq.yd.. This does not include weight of backings. Determine weight in accordance with ASTM D5848.

2.1.1.8 Pile Thickness

Minimum 0.10 inch in accordance with ASTM D6859

2.1.1.9 Pile Density

CPT-1: 6,468 ounce CPT-2: 7,155 ounce

2.1.1.10 Dye Method

CPT-1 : Solution dyed for general carpet; CPT-2: piece dyed for entryway carpet.

2.1.1.11 Backing Materials

Provide primary backing materials of synthetic material. Provide secondary backing to suit project requirements of those customarily used and accepted by the trade for each type of carpet.

2.1.1.12 Attached Cushion

Provide an attached cushion comprised of a synthetic primary substrate with a secondary fiberglass reinforced layer. CPT-1 : weight of 85 oz/sq. yard, density of 18 lb/cubic foot. Do not exceed the maximum ash content of 50 percent when tested in accordance with ASTM D297. Pass the

accelerated aging test in accordance with ASTM D3676 or ASTM D1667 for the cushion.

2.2 PERFORMANCE REQUIREMENTS

2.2.1 Static Control

Provide static control to permanently regulate static buildup to less than 3.0 fkV when tested at 20 percent relative humidity and 70 degrees F in accordance with AATCC 134.

2.2.2 Flammability and Critical Radiant Flux Requirements

Comply with 16 CFR 1630. Provide carpet with a minimum average critical radiant flux to meet Class 1 when tested in accordance with ASTM E648.

2.2.3 Tuft Bind

Comply with ASTM D1335 for tuft bind force required to pull a tuft or loop free from carpet backing with a minimum m 8 pound average force for modular carpet tile.

2.2.4 Colorfastness to Light

Comply colorfastness to light with AATCC 16, Test Option E "Water-Cooled Xenon-Arc Lamp, Continuous Light" and with a minimum 4 grey scale rating after 40 hours.

2.2.5 Colorfastness to Water

Comply colorfastness to water with AATCC 107 and with a minimum 4.0 gray scale rating and a minimum 4.0 transfer scale rating.

2.2.6 Delamination Strength

Provide delamination strength for tufted carpet with a secondary back of minimum 2.5 lbs/inch.

2.3 CARPET CUSHION

2.3.1 Performance Requirements - Critical Radiant Flux

Provide attached carpet cushion to meeta minimum average critical radiant flux to meet Class 1 when tested in accordance with ASTM E648.

2.4 ADHESIVES AND CONCRETE PRIMER

Adhesives and concrete primers shall comply with applicable regulations regarding toxic and hazardous materials. Provide release adhesive for modular tile carpet as recommended by the carpet manufacturer. Provide adhesives flashpoint of minimum 140 degrees F in accordance with ASTM D3278.

2.5 TRANSITIONS

Install carpet transitions where floor covering material changes or carpet edge does not abut a vertical surface. Provide a resilient transition, based on material transitions indicated as per the drawings.

2.6 COLOR, TEXTURE, AND PATTERN

Provide color, texture, and pattern in accordance with the drawings.

PART 3 EXECUTION

3.1 SURFACE PREPARATION

Do not install carpet on surfaces that are unsuitable and will prevent a proper installation. Prepare subfloor in accordance with flooring manufacturer's recommended instructions. Repair holes, cracks, depressions, or rough areas using material recommended by the carpet or adhesive manufacturer. Free floor of any foreign materials and sweep clean. Before beginning work, test subfloor with glue and carpet to determine "open time" and bond. Submit three copies of the manufacturer's printed installation instructions for the carpet, including preparation of substrate, seaming techniques, and recommended adhesives and tapes.

3.2 MOISTURE AND ALKALINITY TESTS

Test concrete slab for moisture content and excessive alkalinity in accordance with CRI CIS. Submit three copies of test reports of moisture and alkalinity content of concrete slab stating date of test, person conducting the test, and the area tested.

3.3 PREPARATION OF CONCRETE SUBFLOOR

Do not commence installation of the carpeting until concrete substrate is at least 90 days old. Prepare the concrete surfaces in accordance with the carpet manufacturer's instructions. Match carpet, when required, and adhesives to prevent off-gassing to a type of curing compounds, leveling agents, and concrete sealer.

3.4 INSTALLATION

Isolate area of installation from rest of building. Perform all work by manufacturer's approved installers. Conduct installation in accordance with the manufacturer's printed instructions and CRI CIS. Protect edges of carpet meeting hard surface flooring with molding and install in accordance with the molding manufacturer's printed instructions. Follow ventilation, personal protection, and other safety precautions recommended by the adhesive manufacturer. Continue ventilation during installation and for at least 72 hours following installation. Do not permit traffic or movement of furniture or equipment in carpeted area for 24 hours after installation. Complete other work which would damage the carpet prior to installation of carpet. Submit three copies of installation drawings for 1) Carpet, and 3)Transitions indicating areas receiving carpet, carpet types, patterns, direction of pile, location of seams, and locations of edge transitions.

3.4.1 Modular Tile Installation

Install modular tiles with adhesive and snug joints. Use installation method as indicated on the drawings. Provide accessibility to the subfloor where required.

3.5 CLEANING AND PROTECTION

Submit three copies of carpet manufacturer's maintenance instructions

describing recommended type of cleaning equipment and material, spotting and cleaning methods, and cleaning cycles.

3.5.1 Cleaning

As specified in Section 01 78 00 CLOSEOUT SUBMITTALS. After installation of the carpet, remove debris, scraps, and other foreign matter. Remove soiled spots and adhesive from the face of the carpet with appropriate spot remover. Cut off and remove protruding face yarn. Vacuum carpet clean with a high-efficiency particulate air (HEPA) filtration vacuum.

3.5.2 Protection

Protect the installed carpet from soiling and damage with heavy, reinforced, nonstaining kraft paper, plywood, or hardboard sheets. Lap and secure edges of kraft paper protection to provide a continuous cover. Restrict traffic for at least 48 hours. Remove protective covering when directed by the Contracting Officer.

3.6 REMNANTS

Manage waste as specified in the Waste Management Plan.

3.7 MAINTENANCE

3.7.1 Extra Materials

Provide extra material from same dye lot for future maintenance. Provide a minimum of five percent of total square yards of each carpet type, pattern, and color.

3.7.2 Maintenance Service

Collect information from the manufacturer about maintenance agreement options, and submit to Contracting Officer. Submit documentation of manufacturer's maintenance agreement for carpet. Include contact information, summary of procedures, and the limitations and conditions applicable to the project. Indicate manufacturer's commitment to reclaim materials for recycling and/or reuse.

-- End of Section --

SECTION 09 90 00

PAINTS AND COATINGS
05/11

PART 1 GENERAL

1.1 REFERENCES

The publications listed below form a part of this specification to the extent referenced. The publications are referred to within the text by the basic designation only.

AMERICAN CONFERENCE OF GOVERNMENTAL INDUSTRIAL HYGIENISTS (ACGIH)

ACGIH 0100	(2001; Supplements 2002-2008) Documentation of the Threshold Limit Values and Biological Exposure Indices

ASME INTERNATIONAL (ASME)

ASME A13.1	(2007; R 2013) Scheme for the Identification of Piping Systems

ASTM INTERNATIONAL (ASTM)

ASTM D4263	(1983; R 2012) Indicating Moisture in Concrete by the Plastic Sheet Method
ASTM D4444	(2013) Use and Calibration of Hand-Held Moisture Meters
ASTM D523	(2014) Standard Test Method for Specular Gloss
ASTM D6386	(2010) Standard Practice for Preparation of Zinc (Hot-Dip Galvanized) Coated Iron and Steel Product and Hardware Surfaces for Painting
ASTM E2129	(2010) Standard Practice for Data Collection for Sustainability Assessment of Building Products
ASTM F1869	(2011) Measuring Moisture Vapor Emission Rate of Concrete Subfloor Using Anhydrous Calcium Chloride

MASTER PAINTERS INSTITUTE (MPI)

MPI 10	(Oct 2009) Exterior Latex, Flat, MPI Gloss Level 1
MPI 101	(Oct 2009) Epoxy Anti-Corrosive Metal Primer
MPI 107	(Oct 2009) Rust Inhibitive Primer (Water-Based)

MPI 108	(Oct 2009) High Build Epoxy Coating, Low Gloss
MPI 11	(Oct 2009) Exterior Latex, Semi-Gloss, MPI Gloss Level 5
MPI 119	(Oct 2009) Exterior Latex, Gloss
MPI 134	(Oct 2009) Galvanized Primer (Waterbased)
MPI 141	(Oct 2009) Interior High Performance Latex MPI Gloss Level 5
MPI 145	(Oct 2009) Institutional Low Odor / VOC Interior Latex, MPI Gloss Level 3
MPI 147	(Oct 2009) Institutional Low Odor / VOC Interior Latex, Semi-Gloss, MPI Gloss Level 5
MPI 151	(Oct 2009) Interior W.B. Light Industrial Coating, MPI Gloss Level 3
MPI 153	(Oct 2009) Interior W.B. Light Industrial Coating, Semi-Gloss, MPI Gloss Level 5
MPI 161	(Oct 2009) Exterior W.B. Light Industrial Coating, MPI Gloss Level 3
MPI 163	(Oct 2009) Exterior W.B. Light Industrial Coating, Semi-Gloss, MPI Gloss Level 5
MPI 164	(Oct 2009) Exterior W.B. Light Industrial Coating, Gloss, MPI Gloss Level 6
MPI 23	(Oct 2009) Surface Tolerant Metal Primer
MPI 39	(Oct 2009) Interior Latex-Based Wood Primer
MPI 4	(Oct 2009) Interior/Exterior Latex Block Filler
MPI 50	(Oct 2009) Interior Latex Primer Sealer
MPI 64	(Oct 2009) Fire Retardant Coating, Latex, Interior Flat (ULC/UL Approved)
MPI 72	(Oct 2009) Polyurethane, Two Component, Pigmented, Gloss
MPI 77	(Oct 2009) Epoxy Gloss
MPI 79	(Oct 2009) Alkyd Anti-Corrosive Metal Primer
MPI 8	(Oct 2009) Exterior Alkyd, Flat, MPI Gloss Level I

MPI 9	(Oct 2009) Exterior Alkyd, Gloss, MPI Gloss Level 6
MPI 94	(Oct 2009) Exterior Alkyd, Semi-Gloss, MPI Gloss Level 5
MPI 95	(Oct 2009) Quick Drying Primer for Aluminum
MPI 99	(Oct 2009) Sealer, Water Based, for Concrete Floors

SCIENTIFIC CERTIFICATION SYSTEMS (SCS)

SCS SP-01	(2000) Environmentally Preferable Product Specification for Architectural and Anti-Corrosive Paints

THE SOCIETY FOR PROTECTIVE COATINGS (SSPC)

SSPC 7/NACE No.4	(2007; E 2004) Brush-Off Blast Cleaning
SSPC PA 1	(2000; E 2004) Shop, Field, and Maintenance Painting of Steel
SSPC PA Guide 3	(1982; E 1995) A Guide to Safety in Paint Application
SSPC SP 1	(1982; E 2004) Solvent Cleaning
SSPC SP 10/NACE No. 2	(2007) Near-White Blast Cleaning
SSPC SP 12/NACE No.5	(2002) Surface Preparation and Cleaning of Metals by Waterjetting Prior to Recoating
SSPC SP 2	(1982; E 2000; E 2004) Hand Tool Cleaning
SSPC SP 3	(1982; E 2004) Power Tool Cleaning
SSPC SP 6/NACE No.3	(2007) Commercial Blast Cleaning
SSPC VIS 1	(2002; E 2004) Guide and Reference Photographs for Steel Surfaces Prepared by Dry Abrasive Blast Cleaning
SSPC VIS 3	(2004) Guide and Reference Photographs for Steel Surfaces Prepared by Hand and Power Tool Cleaning
SSPC VIS 4/NACE VIS 7	(1998; E 2000; E 2004) Guide and Reference Photographs for Steel Surfaces Prepared by Waterjetting

U.S. ARMY CORPS OF ENGINEERS (USACE)

EM 385-1-1	(2014) Safety and Health Requirements Manual

U.S. GENERAL SERVICES ADMINISTRATION (GSA)

FED-STD-313	(Rev D; Notice 1) Material Safety Data, Transportation Data and Disposal Data for Hazardous Materials Furnished to Government Activities

U.S. GREEN BUILDING COUNCIL (USGBC)

LEED NC	(2009) Leadership in Energy and Environmental Design(tm) New Construction Rating System

U.S. NATIONAL ARCHIVES AND RECORDS ADMINISTRATION (NARA)

29 CFR 1910.1000	Air Contaminants

1.2 SUBMITTALS

Government approval is required for submittals with a "G" designation; submittals not having a "G" designation are for Contractor Quality Control approval. When used, a designation following the "G" designation identifies the office that will review the submittal for the Government. The following shall be submitted in accordance with Section 01 33 00 SUBMITTAL PROCEDURES:

The current MPI, "Approved Product List" which lists paint by brand, label, product name and product code as of the date of contract award, will be used to determine compliance with the submittal requirements of this specification. The Contractor may choose to use a subsequent MPI "Approved Product List", however, only one list may be used for the entire contract and each coating system is to be from a single manufacturer. All coats on a particular substrate must be from a single manufacturer. No variation from the MPI Approved Products List is acceptable.

Samples of specified materials may be taken and tested for compliance with specification requirements.

In keeping with the intent of Executive Order 13101, "Greening the Government through Waste Prevention, Recycling, and Federal Acquisition", products certified by SCS as meeting SCS SP-01 shall be given preferential consideration over registered products. Products that are registered shall be given preferential consideration over products not carrying any EPP designation.

SD-02 Shop Drawings

Piping identification

Submit color stencil codes

SD-03 Product Data

Local/Regional Materials; (LEED NC)

Submit documentation indicating distance between manufacturing facility and the project site. Indicate distance of raw material origin from the project site. Indicate relative dollar value of local/regional materials to total dollar value of products

included in project.

Environmental Data

Materials; (LEED NC)

Submit documentation indicating percentage of post-industrial and post-consumer recycled content per unit of product. Indicate relative dollar value of recycled content products to total dollar value of products included in project.

Coating

Manufacturer's Technical Data Sheets; (LEED)

Indicate VOC content.

SD-04 Samples

Paint Drawdowns; G, ID NAVFAC MIDLANT Interior Design

Submit manufacturer's samples of paint colors. Cross reference color samples to color scheme as indicated.

SD-07 Certificates

Applicator's qualifications

Qualification Testing laboratory for coatings

SD-08 Manufacturer's Instructions

Mixing

Detailed mixing instructions, minimum and maximum application temperature and humidity, potlife, and curing and drying times between coats.

Manufacturer's Material Safety Data Sheets

Submit manufacturer's Material Safety Data Sheets for coatings, solvents, and other potentially hazardous materials, as defined in FED-STD-313.

SD-10 Operation and Maintenance Data

Coatings

Preprinted cleaning and maintenance instructions for all coating systems shall be provided.

SD-11 Closeout Submittals

Local/Regional Materials; (LEED)

LEED documentation relative to local/regional materials credit in accordance with LEED Reference Guide. Include in LEED Documentation Notebook.

Materials; (LEED)

LEED documentation relative to recycled content credit in accordance with LEED Reference Guide. Include in LEED Documentation Notebook.

LEED documentation relative to low emitting materials credit in accordance with LEED Reference Guide. Include in LEED Documentation Notebook.

1.3 APPLICATOR'S QUALIFICATIONS

1.3.1 Contractor Qualification

Submit the name, address, telephone number, FAX number, and e-mail address of the contractor that will be performing all surface preparation and coating application. Submit evidence that key personnel have successfully performed surface preparation and application of coatings on a minimum of three similar projects within the past three years. List information by individual and include the following:

a. Name of individual and proposed position for this work.

b. Information about each previous assignment including:

Position or responsibility

Employer (if other than the Contractor)

Name of facility owner

Mailing address, telephone number, and telex number (if non-US) of facility owner

Name of individual in facility owner's organization who can be contacted as a reference

Location, size and description of structure

Dates work was carried out

Description of work carried out on structure

1.4 QUALITY ASSURANCE

1.4.1 Field Samples and Tests

The Contracting Officer may choose up to two coatings that have been delivered to the site to be tested at no cost to the Government. Take samples of each chosen product as specified in the paragraph "Sampling Procedures." Test each chosen product as specified in the paragraph "Testing Procedure." Products which do not conform, shall be removed from the job site and replaced with new products that conform to the referenced specification. Testing of replacement products that failed initial testing shall be at no cost to the Government.

1.4.1.1 Sampling Procedure

The Contracting Officer will select paint at random from the products that have been delivered to the job site for sample testing. The Contractor shall provide one quart samples of the selected paint materials. The samples shall be taken in the presence of the Contracting Officer, and labeled, identifying each sample. Provide labels in accordance with the paragraph "Packaging, Labeling, and Storage" of this specification.

1.4.1.2 Testing Procedure

Provide Batch Quality Conformance Testing for specified products, as defined by and performed by MPI. As an alternative to Batch Quality Conformance Testing, the Contractor may provide Qualification Testing for specified products above to the appropriate MPI product specification, using the third-party laboratory approved under the paragraph "Qualification Testing" laboratory for coatings. The qualification testing lab report shall include the backup data and summary of the test results. The summary shall list all of the reference specification requirements and the result of each test. The summary shall clearly indicate whether the tested paint meets each test requirement. Note that Qualification Testing may take 4 to 6 weeks to perform, due to the extent of testing required.

Submit name, address, telephone number, FAX number, and e-mail address of the independent third party laboratory selected to perform testing of coating samples for compliance with specification requirements. Submit documentation that laboratory is regularly engaged in testing of paint samples for conformance with specifications, and that employees performing testing are qualified. If the Contractor chooses MPI to perform the Batch Quality Conformance testing, the above submittal information is not required, only a letter is required from the Contractor stating that MPI will perform the testing.

1.5 REGULATORY REQUIREMENTS

1.5.1 Environmental Protection

In addition to requirements specified elsewhere for environmental protection, provide coating materials that conform to the restrictions of the local Air Pollution Control District and regional jurisdiction. Notify Contracting Officer of any paint specified herein which fails to conform.

1.5.2 Lead Content

Do not use coatings having a lead content over 0.06 percent by weight of nonvolatile content.

1.5.3 Chromate Content

Do not use coatings containing zinc-chromate or strontium-chromate.

1.5.4 Asbestos Content

Materials shall not contain asbestos.

1.5.5 Mercury Content

Materials shall not contain mercury or mercury compounds.

1.5.6 Silica

Abrasive blast media shall not contain free crystalline silica.

1.5.7 Human Carcinogens

Materials shall not contain ACGIH 0100 confirmed human carcinogens (A1) or suspected human carcinogens (A2).

1.6 PACKAGING, LABELING, AND STORAGE

Paints shall be in sealed containers that legibly show the contract specification number, designation name, formula or specification number, batch number, color, quantity, date of manufacture, manufacturer's formulation number, manufacturer's directions including any warnings and special precautions, and name and address of manufacturer. Pigmented paints shall be furnished in containers not larger than 5 gallons. Paints and thinners shall be stored in accordance with the manufacturer's written directions, and as a minimum, stored off the ground, under cover, with sufficient ventilation to prevent the buildup of flammable vapors, and at temperatures between 40 to 95 degrees F. Do not store paint, polyurethane, varnish, or wood stain products with materials that have a high capacity to adsorb VOC emissions. Do not store paint, polyurethane, varnish, or wood stain products in occupied spaces.

1.7 SAFETY AND HEALTH

Apply coating materials using safety methods and equipment in accordance with the following:

Work shall comply with applicable Federal, State, and local laws and regulations, and with the ACCIDENT PREVENTION PLAN, including the Activity Hazard Analysis as specified in Section 01 35 26 GOVERNMENT SAFETY REQUIREMENTS and in Appendix A of EM 385-1-1. The Activity Hazard Analysis shall include analyses of the potential impact of painting operations on painting personnel and on others involved in and adjacent to the work zone.

1.7.1 Safety Methods Used During Coating Application

Comply with the requirements of SSPC PA Guide 3.

1.7.2 Toxic Materials

To protect personnel from overexposure to toxic materials, conform to the most stringent guidance of:

a. The applicable manufacturer's Material Safety Data Sheets (MSDS) or local regulation.

b. 29 CFR 1910.1000.

c. ACGIH 0100, threshold limit values.

1.8 ENVIRONMENTAL CONDITIONS

Comply, at minimum, with manufacturer recommendations for space ventilation during and after installation.

1.8.1 Coatings

Do not apply coating when air or substrate conditions are:

a. Less than 5 degrees F above dew point;

b. Below 50 degrees F or over 95 degrees F, unless specifically pre-approved by the Contracting Officer and the product manufacturer. Under no circumstances shall application conditions exceed manufacturer recommendations.

1.8.2 Post-Application

Vacate space for as long as possible after application. Wait a minimum of 48 hours before occupying freshly painted rooms. Maintain one of the following ventilation conditions during the curing period, or for 72 hours after application:

a. Supply 100 percent outside air 24 hours a day.

b. Supply airflow at a rate of 6 air changes per hour, when outside temperatures are between 55 degrees F and 85 degrees F and humidity is between 30 percent and 60 percent.

c. Supply airflow at a rate of 1.5 air changes per hour, when outside air conditions are not within the range stipulated above.

1.9 SUSTAINABLE DESIGN REQUIREMENTS

1.9.1 Local/Regional Materials

Use materials or products extracted, harvested, or recovered, as well as manufactured, within a 500 mile radius from the project site, if available from a minimum of three sources. See Section 01 33 29 LEED(tm) DOCUMENTATION for cumulative total local material requirements. Paint and coating materials may be locally available. Coatings to meet EPA's minimum recycled content requirements.

1.9.2 Environmental Data

Submit Table 1 of ASTM E2129 for the following products: All.

1.10 SCHEDULING

Allow paint, polyurethane, varnish, and wood stain installations to cure prior to the installation of materials that adsorb VOCs.

1.11 LOCATION AND SURFACE TYPE TO BE PAINTED

1.11.1 Painting Included

Provide field applied exterior coating for all items that are not prefinished, and to prefinished items with required to provide a color other than a standard prefinished color. Where a space or surface is indicated to be painted, include the following unless indicated otherwise.

a. Surfaces behind portable objects and surface mounted articles readily detachable by removal of fasteners, such as screws and bolts.

b. New factory finished surfaces that require identification or color coding and factory finished surfaces that are damaged during performance of the work.

1.11.1.1 Interior Painting

Includes new surfaces of the building and appurtenances as indicated . Where a space or surface is indicated to be painted, include the following items, unless indicated otherwise.

a. Exposed columns, girders, beams, joists, and metal deck; and

b. Other contiguous surfaces.

1.11.2 Painting Excluded

Do not paint the following unless indicated otherwise.

a. Surfaces concealed and made inaccessible by panelboards, fixed ductwork, machinery, and equipment fixed in place.

b. Surfaces in concealed spaces. Concealed spaces are defined as enclosed spaces above suspended ceilings, furred spaces, attic spaces, crawl spaces, elevator shafts and chases.

c. Steel to be embedded in concrete.

d. Copper, stainless steel, aluminum, brass, and lead except existing coated surfaces.

e. Hardware, fittings, and other factory finished items.

1.11.3 Mechanical and Electrical Painting

Includes field coating of interior and exterior new surfaces.

a. Where a space or surface is indicated to be painted, include the following items unless indicated otherwise.

(1) Exposed piping, conduit, and ductwork;

(2) Supports, hangers, air grilles, and registers;

(3) Miscellaneous metalwork and insulation coverings.

b. Do not paint the following, unless indicated otherwise:

(1) New zinc-coated, aluminum, and copper surfaces under insulation

(2) New aluminum jacket on piping

(3) New interior ferrous piping under insulation.

1.11.3.1 Fire Extinguishing Sprinkler Systems

Clean, pretreat, prime, and paint new fire extinguishing sprinkler systems including valves, piping, conduit, hangers, supports, miscellaneous metalwork, and accessories. Apply coatings to clean, dry surfaces, using

clean brushes. Clean the surfaces to remove dust, dirt, rust, and loose mill scale. Immediately after cleaning, provide the metal surfaces with one coat primer per schedules. Shield sprinkler heads with protective covering while painting is in progress. Upon completion of painting, remove protective covering from sprinkler heads. Remove sprinkler heads which have been painted and replace with new sprinkler heads. Provide primed surfaces with the following:

a. Piping in Unfinished Areas: Provide primed surfaces with one coat of red alkyd gloss enamel applied to a minimum dry film thickness of 1.0 mil in attic spaces, spaces above suspended ceilings, crawl spaces, pipe chases, mechanical equipment room, and spaces where walls or ceiling are not painted or not constructed of a prefinished material.

b. Piping in Finished Areas: Provide primed surfaces with two coats of paint to match adjacent surfaces, except provide valves and operating accessories with one coat of red alkyd gloss enamel applied to a minimum dry film thickness of 1.0 mil. Provide piping with 2 inch wide red enamel bands or self-adhering red plastic bands spaced at maximum of 20 foot intervals throughout the piping systems.

1.11.4 Fire Wall Identification

Identify all fire rated wall with sign stating the following: "Fire Wall - Do Not Penetrate". For aesthetic reasons this requirement does not apply to walls inside stairwell or non-industrial areas such as offices, lobbies, etc, that do not have drop ceilings. In areas with drop ceilings paint notification on the wall above the drop/finished ceiling. In mechanical, electrical and other similar rooms, place signs at 8-feet (2.4 meters) above finished floor level. Space signs at a maximum of 10 feet (3 meter) intervals. In rooms with raised flooring, place signs on fire walls under the floor with spacing of signage reduced to 5 foot (1.5 meter) intervals. Apply signs using florescent red or orange paint over stencils. Metal, plastic or paper decal signs are not acceptable. Take care when applying signage to prevent over-spray onto adjacent finishes.

1.11.5 Exterior Painting of Site Work Items

Field coat as required; see Paint Tables at end of this section.

1.11.6 Definitions and Abbreviations

1.11.6.1 Qualification Testing

Qualification testing is the performance of all test requirements listed in the product specification. This testing is accomplished by MPI to qualify each product for the MPI Approved Product List, and may also be accomplished by Contractor's third party testing lab if an alternative to Batch Quality Conformance Testing by MPI is desired.

1.11.6.2 Batch Quality Conformance Testing

Batch quality conformance testing determines that the product provided is the same as the product qualified to the appropriate product specification. This testing shall only be accomplished by MPI testing lab.

1.11.6.3 Coating

A film or thin layer applied to a base material called a substrate. A

coating may be a metal, alloy, paint, or solid/liquid suspensions on various substrates (metals, plastics, wood, paper, leather, cloth, etc.). They may be applied by electrolysis, vapor deposition, vacuum, or mechanical means such as brushing, spraying, calendaring, and roller coating. A coating may be applied for aesthetic or protective purposes or both. The term "coating" as used herein includes emulsions, enamels, stains, varnishes, sealers, epoxies, and other coatings, whether used as primer, intermediate, or finish coat. The terms paint and coating are used interchangeably.

1.11.6.4 DFT or dft

Dry film thickness, the film thickness of the fully cured, dry paint or coating.

1.11.6.5 DSD

Degree of Surface Degradation, the MPI system of defining degree of surface degradation. Five (5) levels are generically defined under the Assessment sections in the MPI Maintenance Repainting Manual.

1.11.6.6 EPP

Environmentally Preferred Products, a standard for determining environmental preferability in support of Executive Order 13101.

1.11.6.7 EXT

MPI short term designation for an exterior coating system.

1.11.6.8 INT

MPI short term designation for an interior coating system.

1.11.6.9 micron / microns

The metric measurement for 0.001 mm or one/one-thousandth of a millimeter.

1.11.6.10 mil / mils

The English measurement for 0.001 in or one/one-thousandth of an inch, equal to 25.4 microns or 0.0254 mm.

1.11.6.11 mm

The metric measurement for millimeter, 0.001 meter or one/one-thousandth of a meter.

1.11.6.12 MPI Gloss Levels

MPI system of defining gloss. Seven (7) gloss levels (G1 to G7) are generically defined under the Evaluation sections of the MPI Manuals. Traditionally, Flat refers to G1/G2, Eggshell refers to G3, Semigloss refers to G5, and Gloss refers to G6.

Gloss levels are defined by MPI as follows:

Gloss Level	Description	Units at 60 degrees	Units at 85 degrees
G1	Matte or Flat	0 to 5	10 max
G2	Velvet	0 to 10	10 to 35
G3	Eggshell	10 to 25	10 to 35
G4	Satin	20 to 35	35 min
G5	Semi-Gloss	35 to 70	
G6	Gloss	70 to 85	
G7	High Gloss		

Gloss is tested in accordance with ASTM D523. Historically, the Government has used Flat (G1 / G2), Eggshell (G3), Semi-Gloss (G5), and Gloss (G6).

1.11.6.13 MPI System Number

The MPI coating system number in each Division found in either the MPI Architectural Painting Specification Manual or the Maintenance Repainting Manual and defined as an exterior (EXT/REX) or interior system (INT/RIN). The Division number follows the CSI Master Format.

1.11.6.14 Paint

See Coating definition.

1.11.6.15 REX

MPI short term designation for an exterior coating system used in repainting projects or over existing coating systems.

1.11.6.16 RIN

MPI short term designation for an interior coating system used in repainting projects or over existing coating systems.

PART 2 PRODUCTS

2.1 MATERIALS

Conform to the coating specifications and standards referenced in PART 3. Submit manufacturer's technical data sheets for specified coatings and solvents. Minimum 20 percent post-consumer recycled content for the following light-colored paints and primers: All. Minimum 50 percent post-consumer recycled content for the following dark-colored paints and primers: All. All consolidated latex paints shall contain a minimum of 100 percent post-consumer recycled content. Comply with applicable regulations regarding toxic and hazardous materials.

PART 3 EXECUTION

3.1 PROTECTION OF AREAS AND SPACES NOT TO BE PAINTED

Prior to surface preparation and coating applications, remove, mask, or otherwise protect, hardware, hardware accessories, machined surfaces, radiator covers, plates, lighting fixtures, public and private property, and other such items not to be coated that are in contact with surfaces to be coated. Following completion of painting, workmen skilled in the trades involved shall reinstall removed items. Restore surfaces contaminated by

coating materials, to original condition and repair damaged items.

3.2 SURFACE PREPARATION

Remove dirt, splinters, loose particles, grease, oil, and other foreign matter and substances deleterious to coating performance as specified for each substrate before application of paint or surface treatments. Oil and grease shall be removed prior to mechanical cleaning. Cleaning shall be programmed so that dust and other contaminants will not fall on wet, newly painted surfaces. Exposed ferrous metals such as nail heads on or in contact with surfaces to be painted with water-thinned paints, shall be spot-primed with a suitable corrosion-inhibitive primer capable of preventing flash rusting and compatible with the coating specified for the adjacent areas.

3.3 PREPARATION OF METAL SURFACES

3.3.1 New Ferrous Surfaces

a. Ferrous Surfaces including Shop-coated Surfaces and Small Areas That Contain Rust, Mill Scale and Other Foreign Substances: Solvent clean or detergent wash in accordance with SSPC SP 1 to remove oil and grease. Where shop coat is missing or damaged, clean according to SSPC SP 2,or SSPC SP 3 Water jetting to SSPC SP 12/NACE No.5 WJ-4 may be used to remove loose coating and other loose materials. Use inhibitor as recommended by coating manufacturer to prevent premature rusting. Shop-coated ferrous surfaces shall be protected from corrosion by treating and touching up corroded areas immediately upon detection.

b. Surfaces With More Than 20 Percent Rust, Mill Scale, and Other Foreign Substances: Clean entire surface in accordance with SSPC SP 6/NACE No.3 /SSPC SP 12/NACE No.5 WJ-3.

3.3.2 Final Ferrous Surface Condition:

For tool cleaned surfaces, the requirements are stated in SSPC SP 2 and SSPC SP 3. As a visual reference, cleaned surfaces shall be similar to photographs in SSPC VIS 3.

For abrasive blast cleaned surfaces, the requirements are stated in SSPC 7/NACE No.4, SSPC SP 6/NACE No.3, and SSPC SP 10/NACE No. 2. As a visual reference, cleaned surfaces shall be similar to photographs in SSPC VIS 1.

For waterjet cleaned surfaces, the requirements are stated in SSPC SP 12/NACE No.5. As a visual reference, cleaned surfaces shall be similar to photographs in SSPC VIS 4/NACE VIS 7.

3.3.3 Galvanized Surfaces

a. New or Existing Galvanized Surfaces With Only Dirt and Zinc Oxidation Products: Clean with solvent, or non-alkaline detergent solution in accordance with SSPC SP 1. If the galvanized metal has been passivated or stabilized, the coating shall be completely removed by brush-off abrasive blast. New galvanized steel to be coated shall not be "passivated" or "stabilized" If the absence of hexavalent stain inhibitors is not documented, test as described in ASTM D6386, Appendix X2, and remove by one of the methods described therein.

b. Galvanized with Slight Coating Deterioration or with Little or No Rusting: Water jetting to SSPC SP 12/NACE No.5 WJ3 to remove loose coating from surfaces with less than 20 percent coating deterioration and no blistering, peeling, or cracking. Use inhibitor as recommended by the coating manufacturer to prevent rusting.

3.3.4 Non-Ferrous Metallic Surfaces

Aluminum and aluminum-alloy, lead, copper, and other nonferrous metal surfaces.

Surface Cleaning: Solvent clean in accordance with SSPC SP 1 and wash with mild non-alkaline detergent to remove dirt and water soluble contaminants.

3.4 PREPARATION OF CONCRETE AND CEMENTITIOUS SURFACE

3.4.1 Concrete and Masonry

a. Curing: Concrete, stucco and masonry surfaces shall be allowed to cure at least 30 days before painting, except concrete slab on grade, which shall be allowed to cure 90 days before painting.

b. Surface Cleaning: Remove the following deleterious substances.

(1) Dirt, Chalking, Grease, and Oil: Wash new and existing uncoated surfaces with a solution composed of 1/2 cup trisodium phosphate, 1/4 cup household detergent, and 4 quarts of warm water. Then rinse thoroughly with fresh water. Wash existing coated surfaces with a suitable detergent and rinse thoroughly. For large areas, water blasting may be used.

(2) Fungus and Mold: Wash new , existing coated, and existing uncoated surfaces with a solution composed of 1/2 cup trisodium phosphate, 1/4 cup household detergent, 1 quart 5 percent sodium hypochlorite solution and 3 quarts of warm water. Rinse thoroughly with fresh water.

(3) Paint and Loose Particles: Remove by wire brushing.

(4) Efflorescence: Remove by scraping or wire brushing followed by washing with a 5 to 10 percent by weight aqueous solution of hydrochloric (muriatic) acid. Do not allow acid to remain on the surface for more than five minutes before rinsing with fresh water. Do not acid clean more than 4 square feet of surface, per workman, at one time.

c. Cosmetic Repair of Minor Defects: Repair or fill mortar joints and minor defects, including but not limited to spalls, in accordance with manufacturer's recommendations and prior to coating application.

d. Allowable Moisture Content: Latex coatings may be applied to damp surfaces, but not to surfaces with droplets of water. Do not apply epoxies to damp vertical surfaces as determined by ASTM D4263 or horizontal surfaces that exceed 3 lbs of moisture per 1000 square feet in 24 hours as determined by ASTM F1869. In all cases follow manufacturers recommendations. Allow surfaces to cure a minimum of 30 days before painting.

3.4.2 Gypsum Board, Plaster, and Stucco

a. Surface Cleaning: Plaster and stucco shall be clean and free from loose matter; gypsum board shall be dry. Remove loose dirt and dust by brushing with a soft brush, rubbing with a dry cloth, or vacuum-cleaning prior to application of the first coat material. A damp cloth or sponge may be used if paint will be water-based.

b. Repair of Minor Defects: Prior to painting, repair joints, cracks, holes, surface irregularities, and other minor defects with patching plaster or spackling compound and sand smooth.

c. Allowable Moisture Content: Latex coatings may be applied to damp surfaces, but not surfaces with droplets of water. Do not apply epoxies to damp surfaces as determined by ASTM D4263. New plaster to be coated shall have a maximum moisture content of 8 percent, when measured in accordance with ASTM D4444, Method A, unless otherwise authorized. In addition to moisture content requirements, allow new plaster to age a minimum of 30 days before preparation for painting.

3.5 PREPARATION OF WOOD AND PLYWOOD SURFACES

3.5.1 New Plywood and Wood Surfaces, Except Floors:

a. Wood surfaces shall be cleaned of foreign matter.

Surface Cleaning: Surfaces shall be free from dust and other deleterious substances and in a condition approved by the Contracting Officer prior to receiving paint or other finish. Do not use water to clean uncoated wood. Scrape to remove loose coatings. Lightly sand to roughen the entire area of previously enamel-coated wood surfaces.

b. Moisture content of the wood shall not exceed 12 percent as measured by a moisture meter in accordance with ASTM D4444, Method A, unless otherwise authorized.

c. Wood surfaces adjacent to surfaces to receive water-thinned paints shall be primed and/or touched up before applying water-thinned paints.

d. Cracks and Nailheads: Set and putty stop nailheads and putty cracks after the prime coat has dried.

e. Cosmetic Repair of Minor Defects:

(1) Knots and Resinous Wood: Prior to application of coating, cover knots and stains with two or more coats of 3-pound-cut shellac varnish, plasticized with 5 ounces of castor oil per gallon. Scrape away existing coatings from knotty areas, and sand before treating. Prime before applying any putty over shellacked area.

(2) Open Joints and Other Openings: Fill with whiting putty, linseed oil putty. Sand smooth after putty has dried.

(3) Checking: Where checking of the wood is present, sand the surface, wipe and apply a coat of pigmented orange shellac. Allow to dry before paint is applied.

3.5.2 Interior Wood Surfaces, Stain Finish

Interior wood surfaces to receive stain shall be sanded. Oak and other open-grain wood to receive stain shall be given a coat of wood filler not less than 8 hours before the application of stain; excess filler shall be removed and the surface sanded smooth.

3.6 APPLICATION

3.6.1 Coating Application

Painting practices shall comply with applicable federal, state and local laws enacted to insure compliance with Federal Clean Air Standards. Apply coating materials in accordance with SSPC PA 1. SSPC PA 1 methods are applicable to all substrates, except as modified herein.

At the time of application, paint shall show no signs of deterioration. Uniform suspension of pigments shall be maintained during application.

Unless otherwise specified or recommended by the paint manufacturer, paint may be applied by brush, roller, or spray. Use trigger operated spray nozzles for water hoses. Rollers for applying paints and enamels shall be of a type designed for the coating to be applied and the surface to be coated. Wear protective clothing and respirators when applying oil-based paints or using spray equipment with any paints.

Paints, except water-thinned types, shall be applied only to surfaces that are completely free of moisture as determined by sight or touch.

Thoroughly work coating materials into joints, crevices, and open spaces. Special attention shall be given to insure that all edges, corners, crevices, welds, and rivets receive a film thickness equal to that of adjacent painted surfaces.

Each coat of paint shall be applied so dry film shall be of uniform thickness and free from runs, drops, ridges, waves, pinholes or other voids, laps, brush marks, and variations in color, texture, and finish. Hiding shall be complete.

Touch up damaged coatings before applying subsequent coats. Interior areas shall be broom clean and dust free before and during the application of coating material.

Apply paint to new fire extinguishing sprinkler systems including valve housings (no paint on moving components of valves), piping, conduit, hangers, supports, miscellaneous metal work, and accessories. Shield sprinkler heads with protective coverings while painting is in progress. Remove sprinkler heads which have been painted and replace with new sprinkler heads. For piping in unfinished spaces, provide primed surfaces with one coat of red alkyd gloss enamel to a minimum dry film thickness of 1.0 mil. Unfinished spaces include attic spaces, spaces above suspended ceilings, crawl spaces, pipe chases, mechanical equipment room, and space where walls or ceiling are not painted or not constructed of a prefinished material. For piping in finished areas, provide prime surfaces with two coats of paint to match adjacent surfaces, except for junction boxes and conduits refer to paragraph above, 'Fire Extinguishing Sprinkler Systems'. Upon completion of painting, remove protective covering from sprinkler heads.

a. Drying Time: Allow time between coats, as recommended by the coating manufacturer, to permit thorough drying, but not to present topcoat adhesion problems. Provide each coat in specified condition to receive next coat.

b. Primers, and Intermediate Coats: Do not allow primers or intermediate coats to dry more than 30 days, or longer than recommended by manufacturer, before applying subsequent coats. Follow manufacturer's recommendations for surface preparation if primers or intermediate coats are allowed to dry longer than recommended by manufacturers of subsequent coatings. Each coat shall cover surface of preceding coat or surface completely, and there shall be a visually perceptible difference in shades of successive coats.

c. Finished Surfaces: Provide finished surfaces free from runs, drops, ridges, waves, laps, brush marks, and variations in colors.

d. Thermosetting Paints: Topcoats over thermosetting paints (epoxies and urethanes) should be applied within the overcoating window recommended by the manufacturer.

3.6.2 Mixing and Thinning of Paints

Reduce paints to proper consistency by adding fresh paint, except when thinning is mandatory to suit surface, temperature, weather conditions, application methods, or for the type of paint being used. Obtain written permission from the Contracting Officer to use thinners. The written permission shall include quantities and types of thinners to use.

When thinning is allowed, paints shall be thinned immediately prior to application with not more than 1 pint of suitable thinner per gallon. The use of thinner shall not relieve the Contractor from obtaining complete hiding, full film thickness, or required gloss. Thinning shall not cause the paint to exceed limits on volatile organic compounds. Paints of different manufacturers shall not be mixed.

3.6.3 Two-Component Systems

Two-component systems shall be mixed in accordance with manufacturer's instructions. Any thinning of the first coat to ensure proper penetration and sealing shall be as recommended by the manufacturer for each type of substrate.

3.6.4 Coating Systems

a. Systems by Substrates: Apply coatings that conform to the respective specifications listed in the following Tables:

Table

Division 4. Exterior Concrete Masonry Units Paint Table
Division 5. Exterior Metal, Ferrous and Non-Ferrous Paint Table

Division 3. Interior Concrete Paint Table
Division 4. Interior Concrete Masonry Units Paint Table
Division 5. Interior Metal, Ferrous and Non-Ferrous Paint Table
Division 6. Interior Wood Paint Table
Division 9: Interior Plaster, Gypsum Board Paint Table

Table

b. Minimum Dry Film Thickness (DFT): Apply paints, primers, varnishes, enamels, undercoats, and other coatings to a minimum dry film thickness of 1.5 mil each coat unless specified otherwise in the Tables. Coating thickness where specified, refers to the minimum dry film thickness.

c. Coatings for Surfaces Not Specified Otherwise: Coat surfaces which have not been specified, the same as surfaces having similar conditions of exposure.

3.7 COATING SYSTEMS FOR METAL

Apply coatings of Tables in Division 5 for Exterior and Interior.

a. Apply specified ferrous metal primer on the same day that surface is cleaned, to surfaces that meet all specified surface preparation requirements at time of application.

b. Inaccessible Surfaces: Prior to erection, use one coat of specified primer on metal surfaces that will be inaccessible after erection.

c. Shop-primed Surfaces: Touch up exposed substrates and damaged coatings to protect from rusting prior to applying field primer.

d. Surface Previously Coated with Epoxy or Urethane: Apply MPI 101, 1.5 mils DFT immediately prior to application of epoxy or urethane coatings.

e. Pipes and Tubing: The semitransparent film applied to some pipes and tubing at the mill is not to be considered a shop coat, but shall be overcoated with the specified ferrous-metal primer prior to application of finish coats.

f. Exposed Nails, Screws, Fasteners, and Miscellaneous Ferrous Surfaces. On surfaces to be coated with water thinned coatings, spot prime exposed nails and other ferrous metal with latex primer MPI 107.

3.8 COATING SYSTEMS FOR CONCRETE AND CEMENTITIOUS SUBSTRATES

Apply coatings of Tables in Division 3,and Division 4 for Interior.

3.9 COATING SYSTEMS FOR WOOD AND PLYWOOD

a. Apply coatings of Tables in Division 6 for Interior.

b. Apply stains in accordance with manufacturer's printed instructions.

3.10 PIPING IDENTIFICATION

Piping Identification, Including Surfaces In Concealed Spaces: Provide in accordance with ASME A13.1. Place stenciling in clearly visible locations. On piping not covered by ASME A13.1, stencil approved names or code letters, in letters a minimum of 1/2 inch high for piping and a minimum of 2 inches high elsewhere. Stencil arrow-shaped markings on piping to indicate direction of flow using black stencil paint.

3.11 INSPECTION AND ACCEPTANCE

In addition to meeting previously specified requirements, demonstrate

mobility of moving components, including swinging and sliding doors, cabinets, and windows with operable sash, for inspection by the Contracting Officer. Perform this demonstration after appropriate curing and drying times of coatings have elapsed and prior to invoicing for final payment.

3.12 WASTE MANAGEMENT

As specified in the Waste Management Plan and as follows. Do not use kerosene or any such organic solvents to clean up water based paints. Properly dispose of paints or solvents in designated containers. Close and seal partially used containers of paint to maintain quality as necessary for reuse. Store in protected, well-ventilated, fire-safe area at moderate temperature. Place materials defined as hazardous or toxic waste in designated containers.

3.13 PAINT TABLES

All DFT's are minimum values. Use only interior paints and coatings that meet VOC requirements of LEED low emitting materials credit. Acceptable products are listed in the MPI Green Approved Products List, available at http://www.specifygreen.com/APL/ProductIdxByMPInum.asp.

Provide paint drawdowns for painted components listed in the finish schedule.

3.13.1 EXTERIOR PAINT TABLES

DIVISION 4: EXTERIOR CONCRETE MASONRY UNITS PAINT TABLE

A. New concrete masonry on uncoated surface: Refer to Contract Drawings for Locations.

1. Latex

New; MPI EXT 4.2A-G1 (Flat)

Block Filler:	Primer:	Intermediate:	Topcoat:
MPI 4	N/A	MPI 10	MPI 10

System DFT: 11 mils

New; MPI EXT 4.2E-G5 (Semigloss)

Block Filler:	Primer:	Intermediate:	Topcoat:
MPI 4	N/A	MPI 11	MPI 11

System DFT: 11 mils

New; MPI EXT 4.2A-G6 (Gloss)

Block Filler:	Primer:	Intermediate:	Topcoat:
MPI 4	N/A	MPI 119	MPI 119

System DFT: 11 mils

Topcoat: Coating to match adjacent surfaces.

DIVISION 5: EXTERIOR METAL, FERROUS AND NON-FERROUS PAINT TABLE

STEEL / FERROUS SURFACES

A. New Steel that has been hand or power tool cleaned to SSPC SP 2 or SSPC SP 3

STEEL / FERROUS SURFACES

1. Alkyd
   New; MPI EXT 5.1Q-G5 (Semigloss)
   Primer: Intermediate: Topcoat:
   MPI 23 MPI 94 MPI 94
   System DFT: 5.25 mils

   New; MPI EXT 5.1Q-G6 (Gloss) / Existing; MPI REX 5.1D-G6
   Primer: Intermediate: Topcoat:
   MPI 23 MPI 9 MPI 9
   System DFT: 5.25 mils

B. New Steel that has been blast-cleaned to SSPC SP 6/NACE No.3:

2. Alkyd
   New; MPI EXT 5.1D-G5 (Semigloss)
   Primer: Intermediate: Topcoat:
   MPI 79 MPI 94 MPI 94
   System DFT: 5.25 mils

   New; MPI EXT 5.1D-G6 (Gloss) Primer: Intermediate:
Topcoat:
   MPI 79 MPI 9 MPI 9
   System DFT: 5.25 mils

C. New steel blast cleaned to SSPC SP 10/NACE No. 2:

1. Waterborne Light Industrial
   MPI EXT 5.1R-G5 (Semigloss)
   Primer: Intermediate: Topcoat:
   MPI 101 MPI 108 MPI 163
   System DFT: 8.5 mils

   MPI EXT 5.1R-G6 (Gloss)
   Primer: Intermediate: Topcoat:
   MPI 101 MPI 108 MPI 164
   System DFT: 8.5 mils

2. Pigmented Polyurethane
   MPI EXT 5.1J-G6 (Gloss)
   Primer: Intermediate: Topcoat:
   MPI 101 MPI 108 MPI 72
   System DFT: 8.5 mils

EXTERIOR GALVANIZED SURFACES

F. New Galvanized surfaces:

1. Waterborne Primer / Waterborne Light Industrial Coating
   MPI EXT 5.3J-G5 (Semigloss)
   Primer: Intermediate: Topcoat:
   MPI 134 MPI 163 MPI 163
   System DFT: 4.5 mils

   MPI EXT 5.3J-G6 (Gloss)
   Primer: Intermediate: Topcoat:
   MPI 134 MPI 164 MPI 164

EXTERIOR GALVANIZED SURFACES
System DFT: 4.5 mils

EXTERIOR SURFACES, OTHER METALS (NON-FERROUS)

I. Aluminum, aluminum alloy and other miscellaneous non-ferrous metal items not otherwise specified except hot metal surfaces, roof surfaces, and new prefinished equipment. Match surrounding finish:

1. Alkyd
MPI EXT 5.4F-G1 (Flat)
Primer: Intermediate: Topcoat:
MPI 95 MPI 8 MPI 8
System DFT: 5 mils

MPI EXT 5.4F-G5 (Semigloss)
Primer: Intermediate: Topcoat:
MPI 95 MPI 94 MPI 94
System DFT: 5 mils

MPI EXT 5.4F-G6 (Gloss)
Primer: Intermediate: Topcoat:
MPI 95 MPI 9 MPI 9
System DFT: 5 mils

2. Waterborne Light Industrial Coating
MPI EXT 5.4G-G3(Eggshell)
Primer: Intermediate: Topcoat:
MPI 95 MPI 161 MPI 161
System DFT: 5 mils

MPI EXT 5.4G-G5(Semigloss)
Primer: Intermediate: Topcoat:
MPI 95 MPI 163 MPI 163
System DFT: 5 mils

MPI EXT 5.4G-G6(Gloss)
Primer: Intermediate: Topcoat:
MPI 95 MPI 164 MPI 164
System DFT: 5 mils

3.13.2 INTERIOR PAINT TABLES

DIVISION 3: INTERIOR CONCRETE PAINT TABLE

A. New concrete, horizontal surfaces (concrete seal), not specified otherwise:

1. Concrete Sealer
water based, clear sealer system
Primer: First Coat: Topcoat:
NA MPI 99 MPI 79
Application thickness: as per Manufacturer's requirements

2. Penetrating Liquid Floor Treatment: Apply liquid-chemical floor hardener where indicated after curing and drying concrete surface. Clear, chemically reactive, waterborne solution of inorganic silicate or siliconate material

DIVISION 3: INTERIOR CONCRETE PAINT TABLE
and proprietary components, odorless, that penetrates, hardens, and densifies concrete surfaces. Install per manufacturer's instructions.

DIVISION 4: INTERIOR CONCRETE MASONRY UNITS PAINT TABLE

A. New Concrete masonry:

1. New; MPI INT 4.2E-G3 (Eggshell)

Filler	Primer:	Intermediate:	Topcoat:
MPI 4	N/A	MPI 145	MPI 145

System DFT: 4 mils

New; MPI INT 4.2E-G5 (Semigloss)

Filler	Primer:	Intermediate:	Topcoat:
MPI 4	N/A	MPI 147	MPI 147

System DFT: 4 mils

B. New Concrete masonry units in toilets, food-preparation, restrooms and areas requiring a high degree of sanitation as specified:

1. Waterborne Light Industrial Coating
MPI INT 4.2K-G3(Eggshell)

Filler:	Primer:	Intermediate:	Topcoat:
MPI 4	N/A	MPI 151	MPI 151

System DFT: 11 mils

MPI INT 4.2K-G5(Semigloss)

Filler:	Primer:	Intermediate:	Topcoat:
MPI 4	N/A	MPI 153	MPI 153

System DFT: 11 mils

Fill all holes in masonry surface

DIVISION 5: INTERIOR METAL, FERROUS AND NON-FERROUS PAINT TABLE

INTERIOR STEEL / FERROUS SURFACES

A. Metal, Mechanical, Electrical, Fire extinguishing sprinkler systems including valves, conduit, hangers, supports. Surfaces adjacent to painted surfaces (Match surrounding finish), exposed copper piping, and miscellaneous metal items not otherwise specified except floors, hot metal surfaces, and new prefinished equipment:

1. High Performance Architectural Latex
MPI INT 5.1R-G5 (Semigloss)

Primer:	Intermediate:	Topcoat:
MPI 79	MPI 141	MPI 141

System DFT: 5 mils

B. Metal in toilets, food-preparation, restrooms, shower areas, and areas requiring a high degree of sanitation not otherwise specified except floors, hot metal surfaces, and new prefinished equipment:

INTERIOR STEEL / FERROUS SURFACES

1. Waterborne Light Industrial
   MPI INT 5.1R-G5 (Semigloss)
   Primer: Intermediate: Topcoat:
   MPI 101 MPI 108 MPI 163
   System DFT: 5.25 mils

DIVISION 6: INTERIOR WOOD PAINT TABLE

A. New Wood and plywood not otherwise specified:

1. Institutional Low Odor / Low VOC Latex
   New; MPI INT 6.3V-G5 (Semigloss)
   Primer: Intermediate: Topcoat:
   MPI 39 MPI 147 MPI 147
   System DFT: 4 mils

Note: Sand between all coats per manufacturers recommendations. Provide latex (water base) fire retardant paint, manufactured and tested in accordance with MPI 64 for use on interior surfaces on plywood backing panels at Telecommunication rooms.

DIVISION 9: INTERIOR PLASTER, GYPSUM BOARD, TEXTURED SURFACES PAINT TABLE

A. New Plaster and Wallboard not otherwise specified:

1. Institutional Low Odor / Low VOC Latex
   New; MPI INT 9.2M-G3 (Eggshell) / Existing; MPI RIN 9.2M-G3 (Eggshell)
   Primer: Intermediate: Topcoat:
   MPI 50 MPI 145 MPI 145
   System DFT: 4 mils

   New; MPI INT 9.2M-G5 (Semigloss) / Existing; MPI RIN 9.2M-G5 (Semigloss)
   Primer: Intermediate: Topcoat:
   MPI 50 MPI 147 MPI 147
   System DFT: 4 mils

B. New Plaster and Wallboard in toilets, food-preparation, restroomsshower areas, and areas requiring a high degree of sanitation not otherwise specified.:

1. Waterborne Light Industrial Coating
   New; MPI INT 9.2L-G5(Semigloss) / Existing; MPI RIN 9.2L-G5 (Semigloss)
   Primer: Intermediate: Topcoat:
   MPI 50 MPI 153 MPI 153
   System DFT: 4 mils

C. Ceiling at Restrooms, Shower and Locker Rooms, and Janitor Rooms:

1. Epoxy for high humidity areas
   MPI INT 9.2E-G6 (Gloss) or MPI RIN 9.2D-G6 (Gloss)
   Primer: Intermediate: Topcoat:
   MPI 50 MPI 77 MPI 77
   System DFT: 4 mils

-- End of Section --

SECTION 10 10 00

VISUAL COMMUNICATIONS SPECIALTIES
02/09

PART 1 GENERAL

1.1 REFERENCES

The publications listed below form a part of this specification to the extent referenced. The publications are referred to within the text by the basic designation only.

ASTM INTERNATIONAL (ASTM)

ASTM B221	(2014) Standard Specification for Aluminum and Aluminum-Alloy Extruded Bars, Rods, Wire, Profiles, and Tubes

1.2 SUMMARY

The term visual display board when used herein includes marker boards, ; submit manufacturer's descriptive data and catalog cuts plus manufacturer's installation instructions, and cleaning and maintenance instructions. Visual display boards shall be from manufacturer's standard product line. Submit certificate of compliance signed by Contractor attesting that visual display boards conform to the requirements specified.

1.3 SUBMITTALS

Government approval is required for submittals with a "G" designation; submittals not having a "G" designation are for Contractor Quality Control approval. When used, a designation following the "G" designation identifies the office that will review the submittal for the Government. SUBMITTAL PROCEDURES:

SD-03 Product Data

Visual Display Board; G, ID; NAVFAC Midlant Interior Design

SD-04 Samples

Porcelain Enamel; G, ID; NAVFAC Midlant Interior Design
Materials; G, ID; NAVFAC Midlant Interior Design

SD-07 Certificates

Visual Display Board

1.4 DELIVERY, STORAGE, AND HANDLING

Deliver materials to the building site in the manufacturer's original unopened containers and store them in a clean dry area with temperature maintained above 50 degrees F. Stack materials according to manufacturer's recommendations. Visual display boards shall be allowed to acclimate to the building temperature for 24 hours prior to installation.

1.5 WARRANTY

Provide manufacturer's standard performance guarantees or warranties that extend beyond a one year period.

PART 2 PRODUCTS

2.1 MATERIALS

Submit sample of marker board. Samples shall be minimum 4 by 4 inches.

2.1.1 Porcelain Enamel

Provide marker board writing surface composed of porcelain enamel fused to a nominal 28 gauge thick steel, laminated to a minimum 1/4 inch thick core material with a steel or foil backing sheet. Writing surface shall be capable of supporting paper by means of magnets. Submit section showing porcelain enamel coating, steel, core material and backing.

2.1.2 Aluminum

Aluminum frame extrusions shall be alloy 6063-T5 or 6063-T6, conform to ASTM B221, and be a minimum 0.06 inches thick. Exposed aluminum shall have an anodized, satin finish. Straight, single lengths shall be used wherever possible. Joints shall be kept to a minimum. Corners shall be mitered and shall have a hairline closure. Submit sections of frame, map rail, and chalktray, and two map hooks.

2.2 MARKERBOARD

Markerboard shall have a porcelain enamel writing surface and a chalktray. Markerboard shall be a factory assembled unit complete in one piece, without joints whenever possible. When markerboard dimensions require delivery in separate sections, components shall be prefit at the factory, disassembled for delivery and jointed at the site. Frame shall be aluminum. Chalktray shall be the same material as the frame . The markerboard shall have a map rail. The map rail with a tackable insert shall extend the full length of the board, and shall have map hooks with clips for holding sheets of paper. Two map hooks shall be provided for each 4 foot of map rail. Dry erase markings shall be removable with a felt eraser or dry cloth without ghosting. Each unit shall come complete with an eraser and four different color compatible dry erase markers. The size shall be as shown in the drawings.

PART 3 EXECUTION

3.1 INSTALLATION

Perform installation and assembly in accordance with manufacturer's printed instructions. Use concealed fasteners. Visual display boards shall be attached to the walls with suitable devices to anchor each unit. furnish and install trim items, accessories and miscellaneous items in total, including but not limited to hardware, grounds, clips, backing materials, adhesives, brackets, and anchorages incidental to or necessary for a sound, secure, complete and finished installation. Installation shall not be initiated until completion of room painting and finishing operations. Visual display boards shall be installed in locations and at mounting heights indicated. Visual display boards shall be installed level and plumb, and if applicable doors shall be aligned and hardware shall be

adjusted. Damaged units shall be repaired or replaced as directed by the Contracting Officer.

3.2 CLEANING

Writing surfaces shall be cleaned in accordance with manufacturer's instructions.

-- End of Section --

THIS PAGE HAS BEEN INTENTIONALLY LEFT BLANK

SECTION 10 14 00.20

INTERIOR SIGNAGE
11/12

PART 1 GENERAL

1.1 REFERENCES

The publications listed below form a part of this specification to the extent referenced. The publications are referred to in the text by basic designation only.

U.S. GREEN BUILDING COUNCIL (USGBC)

LEED BD+C	(2009; R 2010) Leadership in Energy and Environmental Design(tm) Building Design and Construction (LEED-NC)

U.S. NATIONAL ARCHIVES AND RECORDS ADMINISTRATION (NARA)

36 CFR 1191	Americans with Disabilities Act (ADA) Accessibility Guidelines for Buildings and Facilities; Architectural Barriers Act (ABA) Accessibility Guidelines

1.2 SUSTAINABILITY REPORTING

Materials in this technical specification may contribute towards contract compliance with sustainability requirements. See Section 01 33 29 SUSTAINABILITY REPORTING for project LEED BD+C local/regional materials, recycled content, low emitting materials, and LEED documentation requirements.

1.3 SUBMITTALS

Government approval is required for submittals with a "G" designation; submittals not having a "G" designation are for Contractor Quality Control approval. When used, a designation following the "G" designation identifies the office that will review the submittal for the Government. Submit the following in accordance with Section 01 33 00 SUBMITTAL PROCEDURES:

SD-02 Shop Drawings

Detail Drawings; G, ID NAVFAC Midlant Interior Design

SD-03 Product Data

Installation; G, ID NAVFAC Midlant Interior Design
Warranty

SD-04 Samples

Interior Signage; G, ID NAVFAC Midlant Interior Design
Software

SD-10 Operation and Maintenance Data

Approved Manufacturer's Instructions
Protection and Cleaning; G

SD-11 Closeout Submittals

LEED Documentation

1.4 EXTRA MATERIALS

Provide 5 extra frames and extra stock of sign type 'C'. Provide a minimum of 20 paper inserts for each sign type and two copies of the software for user produced signs and for creating text and symbols for IBM compatible computers for Owner production or paper inserts after project completion. Provide a template containing layout, font, color, and trim lines to allow Owner to produce inserts identical to those provided. The template shall be in Arobat or Word format. Provide all equipment necessary for removal of signage parts and pieces.

1.5 QUALITY ASSURANCE

1.5.1 Samples

Submit interior signage samples of each of the following sign types showing typical quality, workmanship and color: Directional sign, Standard Room sign, Changeable message strip sign. The samples may be installed in the work, provided each sample is identified and location recorded.

1.5.2 Detail Drawings

Submit detail drawings showing elevations of each type of sign, dimensions, details and methods of mounting or anchoring, mounting height, shape and thickness of materials, and details of construction. Include a schedule showing the location, each sign type, and message.

1.6 DELIVERY, STORAGE, AND HANDLING

Materials shall be packaged to prevent damage and deterioration during shipment, handling, storage and installation. Product shall be delivered to the jobsite in manufacturer's original packaging and stored in a clean, dry area in accordance with manufacturer's instructions.

1.7 WARRANTY

Warrant the interior signage for a period of 2 years against defective workmanship and material. Warranties shall be signed by the authorized representative of the manufacturer. Submit warranty accompanied by the document authenticating the signer as an authorized representative of the guarantor. Guarantee that the signage products and the installation are free from any defects in material and workmanship from the date of delivery.

PART 2 PRODUCTS

2.1 STANDARD PRODUCTS

Signs, plaques, directories, and dimensional letters shall be the standard product of a manufacturer regularly engaged in the manufacture of such products that essentially duplicate signs that have been in satisfactory

use at least5 years prior to bid opening. Obtain signage from a single manufacturer with edges and corners of finished letterforms and graphics true and clean.

2.2 ROOM IDENTIFICATION/DIRECTIONAL SIGNAGE SYSTEM

2.2.1 Standard Room Signs

Signs shallincorporate an ABS face with applied graphics including all tactile requirements in adherence to ABA and ADA requirements. All signs shall have matching appearance and construction utilizing the same manufacturing process to assure consistent look and quality.

Standard sign construction shall be as follows:

a. Signage shall, with the exception of directionals and restrooms, be a uniform 8-1/2 inch width to facilitate inserts printed on standard width paper.

b. Insert components shall have a .080 thick, scratch-resistant, non-glare, acrylic window that is flush with the module for a smooth, seamless appearance. Window shall accept a paper or plastic insert identifying changeable text. Inserts shall be easily changeable without tools and signs shall be durable for frequent insert changes. The signage contractor shall provide and install all signage inserts.

c. Signage shall utilize an acrylic sphere for Grade II Braille inserted directly into a scratch resistant, ABS sign face. Braille dots are to be pressure fit in high tolerance drilled holes. Braille dots shall be half hemispherical domes, protruding a minimum of 0.025 inch.

d. Signage shall utilize a pressure activated adhesive. The adhesive shall be non-hazardous and shall allow for flexing and deflection of the adhered components due to changes in temperature and moisture without bond failure. All signs shall be provided with appropriate mounting hardware for the wall substrate. Hardware shall be finished and architectural in appearance. Some signs may be mounted on glass. A blank backer is required to be placed on the opposite side of the glass to cover mounting method. The backer shall match the sign in size and shape. Signs mounted to double doors shall be mounted to inactive leaf.

2.2.2 Character Proportions and Heights

Letters and numbers on signs conform to 36 CFR 1191.

2.2.3 Tactile Letters, Symbols and Braille

Raised letters and numbers on signs shall conform to 36 CFR 1191.

2.3 FABRICATION AND MANUFACTURE

2.3.1 Factory Workmanship

Holes for bolts and screws shall be drilled or punched. Drilling and punching shall produce clean, true lines and surfaces. Exposed surfaces of work shall have a smooth finish and exposed riveting shall be flush. Fastenings shall be concealed where practicable.

2.3.2 Dissimilar Materials

Where dissimilar metals are in contact, the surfaces will be protected to prevent galvanic or corrosive action.

2.4 COLOR, FINISH, AND CONTRAST

Color shall be as indicated on the drawings. Finish of all signs shall be as indicated on the drawings and as required in handicapped-accessible buildings. Final color and finish selections shall be selected from manufacturer's standard offerings at time of submittal.

2.5 TYPEFACE

ADA-ABA compliant font for Room Signs.

PART 3 EXECUTION

3.1 INSTALLATION

Signs shall be installed level, plumb and true and in accordance with approved manufacturer's instructions at locations shown on the detail drawings. Submit six copies of operating instructions outlining the step-by-step procedures required for system operation. The instructions shall include simplified diagrams for the system as installed, the manufacturer's name, model number, service manual, parts list, and brief description of all equipment and their basic operating features. Each set shall be permanently bound and shall have a hard cover. The following identification shall be inscribed on the covers: the words "OPERATING AND MAINTENANCE INSTRUCTIONS", name and location of the facility, name of the Contractor, and contract number. Mounting height and mounting location shall conform to 36 CFR 1191. Required blocking shall be installed. Signs on doors or other surfaces shall not be installed until finishes on such surfaces have been installed. Signs installed on glass surfaces shall be installed with matching blank back-up plates in accordance with the manufacturer instructions and requirements of Section 01 78 23 Operation and Maintenance Data, package 1.

3.1.1 Anchorage

Anchorage shall be in accordance with approved manufacturer's instructions. Anchorage not otherwise specified or shown shall include machine carriage bolts for steel. Exposed anchor and fastener materials shall be compatible with metal to which applied and shall have matching color and finish.

a. Signs mounted to painted gypsum board surfaces shall be removable for painting maintenance.

3.1.2 Protection and Cleaning

Protect the work against damage during construction. Hardware shall be adjusted for proper operation. Sign surfaces shall be cleaned at completion of sign installation in accordance with the manufacturer's approved instructions and the requirements of Section 01 78 23 OPERATION AND MAINTENANCE DATA, Package 1. Submit sixcopies of maintenance instructions listing routine procedures, repairs, and guides.

-- End of Section --

SECTION 10 14 01

EXTERIOR SIGNAGE
04/06

PART 1 GENERAL

1.1 REFERENCES

The publications listed below form a part of this specification to the extent referenced. The publications are referred to within the text by the basic designation only.

AMERICAN WELDING SOCIETY (AWS)

AWS C1.1M/C1.1	(2012) Recommended Practices for Resistance Welding
AWS D1.1/D1.1M	(2010; Errata 2011) Structural Welding Code - Steel

ASTM INTERNATIONAL (ASTM)

ASTM A123/A123M	(2013) Standard Specification for Zinc (Hot-Dip Galvanized) Coatings on Iron and Steel Products
ASTM A653/A653M	(2015) Standard Specification for Steel Sheet, Zinc-Coated (Galvanized) or Zinc-Iron Alloy-Coated (Galvannealed) by the Hot-Dip Process
ASTM A924/A924M	(2014) Standard Specification for General Requirements for Steel Sheet, Metallic-Coated by the Hot-Dip Process
ASTM B108/B108M	(2012; E 2012) Standard Specification for Aluminum-Alloy Permanent Mold Castings
ASTM B209	(2014) Standard Specification for Aluminum and Aluminum-Alloy Sheet and Plate
ASTM B221	(2014) Standard Specification for Aluminum and Aluminum-Alloy Extruded Bars, Rods, Wire, Profiles, and Tubes
ASTM B26/B26M	(2012) Standard Specification for Aluminum-Alloy Sand Castings
ASTM E84	(2015b) Standard Test Method for Surface Burning Characteristics of Building Materials

U.S. GREEN BUILDING COUNCIL (USGBC)

LEED BD+C	(2009; R 2010) Leadership in Energy and Environmental Design(tm) Building Design

and Construction (LEED-NC)

1.2 GENERAL REQUIREMENTS

All exterior signage shall be provided by a single manufacturer. Exterior signage shall be of the design, detail, sizes, types, and message content shown on the drawings, shall conform to the requirements specified, and shall be provided at the locations indicated. Signs shall be complete with lettering, framing as detailed, and related components for a complete installation.

1.2.1 Wind Load Requirements

Exterior signage shall be designed to withstand 130 mph windload. Submit design analysis and supporting calculations performed in support of specified signage.

1.2.2 Character Proportions and Heights

Letters and numbers on indicated signs for handicapped-accessible buildings shall have a width-to-height ratio between 3:5 and 1:1 and a stroke-width-to-height ratio between 1:5 and 1:10. Characters and numbers on indicated signs shall be sized according to the viewing distance from which they are to be read. The minimum height is measured using an upper case letter "X". Lower case characters are permitted.

1.3 SUSTAINABILITY REPORTING

Materials in this technical specification may contribute towards contract compliance with sustainability requirements. See Section 01 33 29 SUSTAINABILITY REPORTING for project LEED BD+C local/regional materials, recycled content, optimize energy performance, rapidly renewable materials LEED documentation requirements.

1.4 SUBMITTALS

Government approval is required for submittals with a "G" designation; submittals not having a "G" designation are for Contractor Quality Control approval. Submit the following in accordance with Section 01 33 00 SUBMITTAL PROCEDURES:

SD-02 Shop Drawings

Approved Detail Drawings; G

SD-03 Product Data

Modular Exterior Signage System
Installation
Exterior Signage; G
Wind Load Requirements

SD-04 Samples

Exterior Signage; G

SD-10 Operation and Maintenance Data

Protection and Cleaning

SD-11 Closeout Submittals

LEED Documentation

1.5 QUALIFICATIONS

Signs, plaques, and dimensional letters shall be the standard product of a manufacturer regularly engaged in the manufacture of the products. Items of equipment shall essentially duplicate equipment that has been in satisfactory use at least 2 years prior to bid opening.

1.6 DELIVERY AND STORAGE

Materials shall be wrapped for shipment and storage, delivered to the jobsite in manufacturer's original packaging, and stored in a clean, dry area in accordance with manufacturer's instructions.

1.7 WARRANTY

Manufacturer's standard performance guarantees or warranties that extend beyond a one year period shall be provided.

PART 2 PRODUCTS

2.1 MODULAR EXTERIOR SIGNAGE SYSTEM

Exterior signage shall consist of a system of coordinated directional, identification, and regulatory type signs located where shown. Dimensions, details, materials, message content, and design of signage shall be as shown. Submit manufacturer's descriptive data and catalog cuts.

2.1.1 Free-Standing Base Mount Pylon/Monolith Type Signs

2.1.1.1 Framing

Interior framing shall consist of aluminum or galvanized steel tube columns welded to companion plates. Perimeter framing shall consist of aluminum or steel angle framing welded to the post and plate system as designed. Framing members shall be designed to permit access to electrical equipment and panel removal. Mounting shall be provided as shown. Framing members of steel shall be finished with semi-gloss baked enamel or two-component acrylic polyurethane. Openings shall be sealed from moisture and made tamper-proof.

2.1.1.2 Exterior Sheeting Panels

Modular panels shall be provided in sizes shown on drawings. Panels shall be fabricated a minimum of 0.080 inch thick aluminum 0.125 inch. Panels shall be heliarc welded to framing system. Top and end panels shall be removable and shall be secured by 3/16 inch socket head jack nuts. Finish for metal panels shall be semi-gloss baked powder coat.

2.1.1.3 Mounting

Mount by securing to concrete foundation as indicated.

2.1.1.4 Finishes

Base finish shall be as indicated.

2.1.2 Panel And Post/Panel Type Signs

2.1.2.1 Posts

One-piece aluminum posts shall be provided with minimum 0.125 inch wall thickness. Posts shall be designed to accept panel framing system described. The post shall be designed to permit attachment of panel framing system without exposed fasteners. Caps shall be provided for each post.

2.1.2.2 Panel Framing System

Panel framing consisting of aluminum sections and interlocking track components shall be designed to interlock with posts with concealed fasteners.

2.1.2.3 Panels

Modular message panels shall be provided in sizes shown on drawings. Panels shall be fabricated a minimum of 0.080 to 0.125 inch thickness. Face panels shall be designed to be removable.

2.1.2.4 Finishes

Post finish shall be semi-gloss baked powder coat. Metal panel system finish shall be as shown.

2.1.2.5 Mounting

Provide permanent mounting by embedding posts in concrete foundation as indicated.

2.2 GRAPHICS FOR EXTERIOR SIGNAGE SYSTEMS

2.2.1 Graphics

Signage graphics shall conform to one of the following:

a. Pressure sensitive precision cut vinyl letters with non-reflecting surface shall be provided.

b. Message shall be applied to panel using the silkscreen process. Silkscreened images shall be executed with photo screens prepared from original art. Handcut screens will not be accepted. Original art shall be defined as artwork that is a first generation pattern of the original specified art. Edges and corners shall be clean. Rounded corners, cut or ragged edges, edge buildup, bleeding or surfaces pinholes will not be accepted.

2.2.2 Messages

See drawings for message content. Typeface: Highway C. Type size as indicated.

2.3 ALUMINUM ALLOY PRODUCTS

Aluminum alloy products shall conform to ASTM B209 for sheet or plate, ASTM B221 for extrusions and ASTM B26/B26M or ASTM B108/B108M for castings. Aluminum extrusions shall be provided at least 1/8 inch thick and aluminum plate or sheet at least 16 gauge thick. Welding for aluminum products shall conform to AWS C1.1M/C1.1.

2.4 ORGANIC COATING

Clean, prime and give surfaces a semi-gloss baked powder coat finisg with total dry film thickness not less than 2 mils.

2.5 VINYL SHEETING FOR GRAPHICS

Vinyl sheeting shall be 5 to 7 year premium type and shall be in accordance with the flammability requirements of ASTM E84 and shall be a minimum 0.003 inch film thickness. Film shall include a precoated pressure sensitive adhesive backing, Class 1, or positionable pressure sensitive adhesive backing, Class 3.

2.6 ANCHORS AND FASTENERS

Exposed anchor and fastener materials shall be compatible with metal to which applied and shall match in color and finish and shall be non-rusting, non-corroding, and non-staining. Exposed fasteners shall be tamper-proof.

2.7 SHOP FABRICATION AND MANUFACTURE

2.7.1 Factory Workmanship

Work shall be assembled in the shop, as far as practical, ready for installation at the site. Work that cannot be shop assembled shall be given a trial fit in the shop to ensure proper field assembly. Holes for bolts and screws shall be drilled or punched. Drilling and punching shall produce clean, true lines and surfaces. Welding to or on structural steel shall be in accordance with AWS D1.1/D1.1M. Welding shall be continuous along the entire area of contact. Exposed welds shall be ground smooth. Exposed surfaces of work shall have a smooth finish and exposed riveting shall be flush. Fastenings shall be concealed where practical. Items specified to be galvanized shall be by hot-dip process after fabrication if practical. Galvanization shall be in accordance with ASTM A123/A123M and ASTM A653/A653M, as applicable. Other metallic coatings of steel sheet shall be in accordance with ASTM A924/A924M. Joints exposed to the weather shall be formed to exclude water. Drainage and weep holes shall be included as required to prevent condensation buildup.

2.8 COLOR, FINISH, AND CONTRAST

Color shall be as indicated on the drawings. Color listed is not intended to limit the selection of equal colors from other manufacturers. For buildings required to be handicapped-accessible, the characters and background of signs shall be eggshell, matte, or other non-glare finish. Characters and symbols shall contrast with their background - either light characters on a dark background or dark characters on a light background.

PART 3 EXECUTION

3.1 INSTALLATION

Signs, plaques, or dimensional letters shall be installed in accordance with approved manufacturer's instructions at locations shown on the approved detail drawings; submit drawings showing elevations of each type of sign; dimensions, details, and methods of mounting or anchoring; shape and thickness of materials; and details of construction. Signs shall be installed plumb and true at mounting heights indicated, and by method shown or specified. Signs mounted on other surfaces shall not be installed until finishes on such surfaces have been completed. Submit manufacturer's installation instructions and cleaning instructions.

3.1.1 Anchorage

Anchorage and fastener materials shall be in accordance with approved manufacturer's instructions for the indicated substrate. Anchorage not otherwise specified or indicated shall include slotted inserts, expansion shields, and powder-driven fasteners when approved for concrete; toggle bolts and through bolts for masonry; machine carriage bolts for steel; lag bolts and screws for wood.

3.1.2 Protection and Cleaning

The work shall be protected against damage during construction. Hardware shall be adjusted for proper operation. Frames, and other sign surfaces shall be cleaned in accordance with manufacturer's instructions.

3.2 FIELD PAINTED FINISH

Miscellaneous metals and frames shall be field painted in accordance with Section 09 90 00 PAINTS AND COATINGS. Anodized metals, masonry, and glass shall be protected from paint. Finish shall be free of scratches or other blemishes.

-- End of Section --

SECTION 10 26 13

WALL AND CORNER GUARDS
08/10

PART 1 GENERAL

1.1 REFERENCES

The publications listed below form a part of this specification to the extent referenced. The publications are referred to within the text by the basic designation only.

ASTM INTERNATIONAL (ASTM)

ASTM B221	(2014) Standard Specification for Aluminum and Aluminum-Alloy Extruded Bars, Rods, Wire, Profiles, and Tubes
ASTM D1784	(2011) Standard Specification for Rigid Poly(Vinyl Chloride) (PVC) Compounds and Chlorinated Poly(Vinyl Chloride) (CPVC) Compounds
ASTM D256	(2010) Determining the Izod Pendulum Impact Resistance of Plastics
ASTM D543	(2006) Standard Practices for Evaluating the Resistance of Plastics to Chemical Reagents
ASTM D635	(2010) Standard Test Method for Rate of Burning and/or Extent and Time of Burning of Self-Supporting Plastics in a Horizontal Position
ASTM E84	(2015b) Standard Test Method for Surface Burning Characteristics of Building Materials
ASTM G21	(2015) Determining Resistance of Synthetic Polymeric Materials to Fungi

SOCIETY OF AUTOMOTIVE ENGINEERS INTERNATIONAL (SAE)

SAE J1545	(2005) Instrumental Color Difference Measurement for Exterior Finishes, Textiles and Colored Trim

1.2 SUSTAINABILITY REQUIREMENTS

Materials in this technical specification may contribute towards contract compliance with sustainability requirements. See Section 01 33 29 SUSTAINABLE REPORTING for project local/regional materials, low-emitting materials, and recycled content requirements for LEED Documentation

1.3 SUBMITTALS

Government approval is required for submittals with a "G" designation; submittals not having a "G" designation are for Contractor Quality Control approval. When used, a designation following the "G" designation identifies the office that will review the submittal for the Government.Submit the following in accordance with Section 01 33 00 SUBMITTAL PROCEDURES:

SD-02 Shop Drawings

Corner Guards; G, ID NAVFAC MidLant Interior Design

Chair Rail; G, ID NAVFAC MidLant Interior Design

SD-03 Product Data

Corner Guards; G, ID NAVFAC MidLant Interior Design

Chair Rail; G, ID NAVFAC MidLant Interior Design

SD-04 Samples

Finish; G, ID NAVFAC MidLant Interior Design

SD-06 Test Reports

Corner Guards

Chair Rail

SD-07 Certificates

Corner Guards

Chair Rail

SD-11 Closeout Submittals

LEED Documentation; G

1.4 DELIVERY, STORAGE, AND HANDLING

Deliver materials to the project site in manufacturer's original unopened containers with seals unbroken and labels and trademarks intact. Keep materials dry, protected from weather and damage, and stored under cover. Materials shall be stored at approximately 70 degrees F for at least 48 hours prior to installation.

1.5 WARRANTY

Provide manufacturer's standard performance guarantees or warranties that extend beyond a 1 year period.

PART 2 PRODUCTS

2.1 STANDARD PRODUCTS

To the maximum extent possible, materials shall be the standard products

of a single manufacturer and shall be furnished as detailed. Drawings show general configuration of products required, and items differing in minor details from those shown will be acceptable.

2.1.1 Resilient Material

Provide resilient material consisting of high impact resistant extruded acrylic vinyl, polyvinyl chloride, or injection molded thermal plastic conforming to the following:

2.1.1.1 Minimum Impact Resistance

Minimum impact resistance shall be 18 ft-lbs/sq. inch when tested in accordance with ASTM D256, (Izod impact, ft-lbs per sq inch notched).

2.1.1.2 Fire Rating

Fire rating shall be Class 1 when tested in accordance with ASTM E84, having a maximum flame spread of 25 and a smoke developed rating of 450 or less. Material shall be rated self extinguishing when tested in accordance with ASTM D635. Material shall be labeled and tested by an approved nationally known testing laboratory. Resilient material used for protection on fire rated doors and frames shall be listed by the testing laboratory performing the tests. Resilient material installed on fire rated wood/steel door and frame assemblies shall have been tested on similar type assemblies. Test results of material tested on any other combination of door/frame assembly will not be acceptable.

2.1.1.3 Integral Color

Colored components shall have integral color and shall be matched in accordance with SAE J1545 to within plus or minus 1.0 on the CIE-LCH scales.

2.1.1.4 Chemical and Stain Resistance

Materials shall be resistant to chemicals and stains reagents in accordance with ASTM D543.

2.1.1.5 Fungal and Bacterial Resistance

Materials shall be resistant to fungi and bacteria in accordance with ASTM G21, as applicable.

2.2 CORNER GUARDS

2.2.1 Resilient Corner Guards

Corner guard units shall be surface mounted type, 1/4 inch radius formed with 2 inch wings and shall be a minimum 0.078 inch thick, and installed over a continuous aluminum retainer. Mounting hardware, cushions, and base plates shall be included. Plastic shall comply with ASTM D1784 and have a minimum impact resistance of 24 ft-lbf/in, when tested per ASTM D256, method A. Assembly shall consist of a snap-on corner guard formed from high impact resistant resilient material, mounted on a continuous aluminum retainer. Extruded aluminum retainer shall conform to ASTM B221, alloy 6063, temper T5 or T6. Factory fabricated end closure caps shall be furnished for top and bottom of surface mounted corner guards. Insulating materials that are an integral part of the corner guard system shall be provided by the manufacturer of the corner guard system. Provide resilient

corner guards at exposed exterior corners of gypsum partitions in locations as indicated per Contract Drawings.

2.3 CHAIR RAIL

2.3.1 Chair Rail

Chair rail shall consist of snap-on covers of high impact resistant resilient material, minimum 0.060 inch thick on a continuous extruded aluminum retainer, minimum 0.080 inch thick anchored to wall at maximum 36 inches on center. Chair rail shall be a miniumum of 2-1/8 inch high x 1-1/8 inch wide and shall sit flush to wall. Prefabricated end closure caps, inside and outside corners, concealed splices, cushions, mounting hardware and other accessories standard with the manufacturer shall be provided. End caps and corners shall be field adjustable to assure close alignment with handrails.

2.4 TRIM, FASTENERS AND ANCHORS

Provide vinyl trim, fasteners and anchors for each specific installation as per manufacturer's recommendations.

2.5 FINISH

Submit three samples indicating color and texture of materials requiring color and finish.

2.5.1 Resilient Material Finish

Finish for resilient material shall be in accordance with SAE J1545. Finish and color shall be provided as indicated on Contract Drawings.

2.6 ADHESIVES

Adhesive for resilient material shall be in accordance with manufacturers recommendations.

2.7 COLOR

Color shall be selected from manufacturers standard colors. Color listed is not intended to limit the selection of equal colors from other manufacturers.

PART 3 EXECUTION

3.1 INSTALLATION

3.1.1 Corner Guards and Chair Rail

Material shall be mounted at locations indicated in accordance with manufacturer's written installation instructions.

-- End of Section --

SECTION 10 28 13

TOILET ACCESSORIES
07/06

PART 1 GENERAL

1.1 REFERENCES

The publications listed below form a part of this specification to the extent referenced. The publications are referred to within the text by the basic designation only.

ASTM INTERNATIONAL (ASTM)

ASTM C1036	(2010; E 2012) Standard Specification for Flat Glass

U.S. GREEN BUILDING COUNCIL (USGBC)

LEED BD+C	(2009; R 2010) Leadership in Energy and Environmental Design(tm) Building Design and Construction (LEED-NC)

1.2 SUSTAINABILITY REPORTING

Materials in this technical specification may contribute towards contract compliance with sustainability requirements. See Section 01 33 29 SUSTAINABILITY REPORTING for project LEED BD+C local/ regional materials for LEED documentation requirements.

1.3 SUBMITTALS

Government approval is required for submittals with a "G" designation; submittals not having a "G" designation are for Contractor Quality Control approval. Submit the following in accordance with Section 01 33 00 SUBMITTAL PROCEDURES:

SD-03 Product Data

Finishes; G, ID NAVFAC MidLant Interior Design
Accessory Items; G, ID NAVFAC Interior Design

SD-04 Samples

Finishes; G, ID NAVFAC MidLant Interior Design
Accessory Items; G, ID NAVFAC MidLant Interior Design

SD-07 Certificates

Accessory Items

SD-10 Operation and Maintenance Data

Electric Hand Dryer; G

SD-11 Closeout Submittals

LEED Documentation; G

1.4 DELIVERY, STORAGE, AND HANDLING

Wrap toilet accessories for shipment and storage, then deliver to the jobsite in manufacturer's original packaging, and store in a clean, dry area protected from construction damage and vandalism.

1.5 WARRANTY

Provide manufacturer's standard performance guarantees or warranties that extend beyond a 1 year period.

PART 2 PRODUCTS

2.1 MANUFACTURED UNITS

Provide toilet accessories as indicated in accordance with the drawings. Provide each accessory item complete with the necessary mounting plates of sturdy construction with corrosion resistant surface.

2.1.1 Anchors and Fasteners

Provide anchors and fasteners capable of developing a restraining force commensurate with the strength of the accessory to be mounted and suited for use with the supporting construction. Provide tamperproof design exposed fasteners with finish to match the accessory.

2.1.2 Finishes

Except where noted otherwise, provide the following finishes on metal:

Metal	Finish
Stainless steel	No. 4 satin finish
Carbon steel, copper alloy, and brass	Chromium plated, bright

2.2 ACCESSORY ITEMS

Conform to the requirements for accessory items specified below. Submit fasteners proposed for use for each type of wall construction, mounting, operation, and cleaning instructions and one sample of each other accessory proposed for use. Incorporate approved samples into the finished work, provided they are identified and their locations noted. Submit certificate for each type of accessory specified, attesting that the items meet the specified requirements.

2.2.1 Grab Bar

Provide an 18 gauge, 1-1/4 inch grab bar OD Type 304 stainless steel. Provide form and length for grab bar as indicated. Provide concealed mounting flange. Provide grab with satin finish. Furnish installed bars capable of withstanding a 500 pound vertical load without coming loose from the fastenings and without obvious permanent deformation. Allow 1-1/2 inch space between wall and grab bar.

2.2.2 Mirrors, Glass

Provide Type I transparent flat type, Class 1-clear glass for mirrors. Glazing Quality q1 1/4 inch thick conforming to ASTM C1036. Coat glass on one surface with silver coating, copper protective coating, and mirror backing paint. Provide highly adhesive pure silver coating of a thickness which provides reflectivity of 83 percent or more of incident light when viewed through 1/4 inch thick glass, free of pinholes or other defects. Provide copper protective coating with pure bright reflective copper, homogeneous without sludge, pinholes or other defects, of proper thickness to prevent "adhesion pull" by mirror backing paint. Provide mirror backing paint with two coats of special scratch and abrasion-resistant paint and baked in uniform thickness to provide a protection for silver and copper coatings which will permit normal cutting and edge fabrication.

2.2.3 Mirror, Metal

Provide a brightly polished stainless steel metal mirror of 0.037 inch minimum thickness, edges turned back 1/4 inch and recess fitted with tempered hardboard backing, and theft-proof fasteners. Provide size in accordance with the drawings.

2.2.4 Combination Paper Towel Dispenser/Waste Receptacle

Provide semi-recessed dispenser/receptacle with a capacity of 600 sheets of C-fold, single-fold, or quarter-fold towel. Design waste receptacle to be locked in unit and removable for service. Provide tumbler key locking mechanism. Provide waste receptacle capacity of 15 gallons minimum. Fabricate a minimum 0.03 inch stainless steel welded construction unit with all exposed surfaces having a satin finish. Provide waste receptacle that accepts reusable liner standard for unit manufacturer.

2.2.5 Sanitary Napkin Disposer

Construct a Type 304 stainless steel sanitary napkin disposal with removable leak-proof receptacle for disposable liners. Provide fifty disposable liners of the type standard with the manufacturer. Retain receptacle in cabinet by tumbler lock. Provide disposer with a door for inserting disposed napkins, partition mounted, double access or surface mounted.

2.2.6 Soap Dispenser

Provide soap dispenser surface mounted, liquid type consisting of a vertical Type 304 stainless steel tank with holding capacity of 40 fluid ounces with a corrosion-resistant all-purpose valve that dispenses liquid soaps, lotions, detergents and antiseptic soaps. Provide wall-mounted stainless steel soap dispensers at locations as indicated on the drawings.

2.2.7 Coat Hook

Provide surface mounted Type 304 stainless steel single prong unit. Provide stainless steel supports.

2.2.8 Toilet Tissue Dispenser

Furnish Type II - surface mounted toilet tissue holder with two rolls of standard tissue mounted horizontally. Provide stainless steel, satin

finish cabinet.

2.2.9 Electric Hand Dryer

Provide wall mount and electric hand dryer designed to operate at 110/125 volts, 60 cycle, single phase alternating current with a heating element core rating of a maximum 2100 watts. Provide dryer housing of single piece construction and of chrome plated steel . Submit 4 complete copies of maintenance instructions listing routine maintenance procedures and possible breakdowns. Include repair instructions for simplified wiring and control diagrams and other information necessary for unit maintenance.

2.2.10 Mop and Broom Holder

Stainless steel mop and broom holder shall be 36 inches long and incorporate 4 spring-loaded rubber hat cam action mop/broom holders and three hooks.

PART 3 EXECUTION

3.1 INSTALLATION

Provide the same finish for the surfaces of fastening devices exposed after installation as the attached accessory. Provide tamper proof designed fasteners. Install accessories at the location and height indicated. Protect exposed surfaces of accessories with strippable plastic or by other means until the installation is accepted. After acceptance of accessories, remove and dispose of strippable plastic protection. Coordinate accessory manufacturer's mounting details with other trades as their work progresses. Use sealants for brackets, plates, anchoring devices and similar items in showers (a silicone or polysulfide sealant) as they are set to provide a watertight installation. After installation, thoroughly clean exposed surfaces and restore damaged work to its original condition or replace with new work.

3.1.1 Semi-Recessed Accessories

Set anchors in mortar in masonry construction. Fasten to metal studs or framing with sheet metal screws in metal construction.

3.1.2 Surface Mounted Accessories

Mount on concealed backplates, unless specified otherwise. Conceal fasteners on accessories without backplates. Install accessories with sheet metal screws in lead-lined braided jute, PTFE or neoprene sleeves, or lead expansion shields, or with toggle bolts or other approved fasteners as required by the construction. Install backplates in the same manner, or provide with lugs or anchors set in mortar, as required by the construction. Fasten accessories mounted on gypsum board walls without solid backing into the metal studs , or to metal backplates secured to metal studs.

3.2 CLEANING

Clean material in accordance with manufacturer's recommendations. Do not use alkaline or abrasive agents. Take precautions to avoid scratching or marring exposed surfaces.

-- End of Section --

SECTION 10 44 16

FIRE EXTINGUISHERS
05/12

PART 1 GENERAL

1.1 REFERENCES

The publications listed below form a part of this specification to the extent referenced. The publications are referred to within the text by the basic designation only.

UNDERWRITERS LABORATORIES (UL)

UL 299 (2012) Dry Chemical Fire Extinguishers

1.2 SUBMITTALS

Government approval is required for submittals with a "G" designation; submittals not having a "G" designation are for Contractor Quality Control approval. Submittals with an "S" are for inclusion in the Sustainability Notebook, in conformance to Section 01 33 29 SUSTAINABILITY REQUIREMENTS. Submit the following in accordance with Section 01 33 00 SUBMITTAL PROCEDURES:

SD-01 Preconstruction Submittals

Manufacturer's Data; G

SD-02 Shop Drawings

Cabinets; G

Wall Brackets; G

SD-03 Product Data

Cabinets; G

Wall Brackets; G

Replacement Parts; G

SD-04 Samples

Cabinet

Wall Brackets

SD-07 Certificates

Manufacturer's Warranty with Inspection Tag

1.3 DELIVERABLES

1.3.1 Samples

Provide the following samples: One full-sized sample of each type of Cabinet being installed and one sample of each Wall Brackets being used.

Approved samples may be used for installation, with proper identification and storage.

1.4 DELIVERY, HANDLING, AND STORAGE

Protect materials from weather, soil, and damage during delivery, storage, and construction.

Deliver materials in their original packages, containers, or bundles bearing the brand name and the name and type of the material.

1.5 WARRANTY

Guarantee that Fire Extinguisher Cabinets are free of defects in materials, fabrication, finish, and installation and that they will remain so for a period of not less than 6 years after completion.

PART 2 PRODUCTS

Submit fabrication drawings consisting of fabrication and assembly details performed in the factory and product data for the following items: Cabinets and Wall Brackets.

2.1 Fire Extinguishers

Fire Extinguishers shall be provided as part of the FF&E Package.

Utilize dry chemical type fire extinguishers compliant with UL 299.

Submit Manufacturer's Data for each type of Fire Extinguisher required, detailing all related Cabinet, Wall Mounting and Accessories information, complete with Manufacturer's Warranty with Inspection Tag.

2.2 CABINETS

2.2.1 Material

Provide enameled steel cabinets.

2.2.2 Type

Provide semi-recessed type cabinets.

2.2.3 Size

Dimension cabinets to accommodate 2A:20B:C fire extinguishers.

2.3 WALL BRACKETS

Provide wall-hook fire extinguisher wall brackets.

Provide wall bracket and accessories as approved.

PART 3 EXECUTION

3.1 INSTALLATION

Install Fire Extinguisher Cabinets where indicated on the drawings. Verify exact locations prior to installation.

Comply with the manufacturer's recommendations for all installations.

3.2 ACCEPTANCE PROVISIONS

3.2.1 Repairing

Remove and replace damaged and unacceptable portions of completed work with new work at no additional cost to the Government.

Submit Replacement Parts list indicating specified items replacement part, replacement cost, and name, address and contact for replacement parts distributor.

3.2.2 Cleaning

Clean all surfaces of the work, and adjacent surfaces which are soiled as a result of the work. Remove from the site all construction equipment, tools, surplus materials and rubbish resulting from the work.

-- End of Section --

THIS PAGE HAS BEEN INTENTIONALLY LEFT BLANK

SECTION 12 93 00

SITE FURNISHINGS
02/09

PART 1 GENERAL

1.1 REFERENCES

The publications listed below form a part of this specification to the extent referenced. The publications are referred to within the text by the basic designation only.

ALUMINUM ASSOCIATION (AA)

AA DAF45	(2003; Reaffirmed 2009) Designation System for Aluminum Finishes

AMERICAN INSTITUTE OF STEEL CONSTRUCTION (AISC)

AISC 303	(2010) Code of Standard Practice for Steel Buildings and Bridges

AMERICAN SOCIETY OF SAFETY ENGINEERS (ASSE/SAFE)

ASSE/SAFE A10.3	(2013) Operations - Safety Requirements for Powder Actuated Fastening Systems

AMERICAN WELDING SOCIETY (AWS)

AWS D1.1/D1.1M	(2010; Errata 2011) Structural Welding Code - Steel

ASME INTERNATIONAL (ASME)

ASME B18.2.1	(2012; Errata 2013) Square and Hex Bolts and Screws (Inch Series)
ASME B18.2.2	(2010) Nuts for General Applications: Machine Screw Nuts, Hex, Square, Hex Flange, and Coupling Nuts (Inch Series)
ASME B18.21.1	(2009) Washers: Helical Spring-Lock, Tooth Lock, and Plain Washers (Inch Series)
ASME B18.6.2	(1998; R 2010) Slotted Head Cap Screws, Square Head Set Screws, and Slotted Headless Set Screws: Inch Series
ASME B18.6.3	(2013) Machine Screws, Tapping Screws, and Machine Drive Screws (Inch Series)

ASTM INTERNATIONAL (ASTM)

ASTM A1064/A1064M	(2013) Standard Specification for Carbon-Steel Wire and Welded Wire Reinforcement, Plain and Deformed, for

	Concrete
ASTM A123/A123M	(2013) Standard Specification for Zinc (Hot-Dip Galvanized) Coatings on Iron and Steel Products
ASTM A153/A153M	(2009) Standard Specification for Zinc Coating (Hot-Dip) on Iron and Steel Hardware
ASTM A307	(2012) Standard Specification for Carbon Steel Bolts and Studs, 60 000 PSI Tensile Strength
ASTM A36/A36M	(2014) Standard Specification for Carbon Structural Steel
ASTM A47/A47M	(1999; R 2014) Standard Specification for Ferritic Malleable Iron Castings
ASTM A48/A48M	(2003; R 2012) Standard Specification for Gray Iron Castings
ASTM A500/A500M	(2013) Standard Specification for Cold-Formed Welded and Seamless Carbon Steel Structural Tubing in Rounds and Shapes
ASTM A501	(2007) Standard Specification for Hot-Formed Welded and Seamless Carbon Steel Structural Tubing
ASTM A53/A53M	(2012) Standard Specification for Pipe, Steel, Black and Hot-Dipped, Zinc-Coated, Welded and Seamless
ASTM A615/A615M	(2014) Standard Specification for Deformed and Plain Carbon-Steel Bars for Concrete Reinforcement
ASTM A653/A653M	(2015) Standard Specification for Steel Sheet, Zinc-Coated (Galvanized) or Zinc-Iron Alloy-Coated (Galvannealed) by the Hot-Dip Process
ASTM A780/A780M	(2009) Standard Practice for Repair of Damaged and Uncoated Areas of Hot-Dip Galvanized Coatings
ASTM B108/B108M	(2012; E 2012) Standard Specification for Aluminum-Alloy Permanent Mold Castings
ASTM B209	(2014) Standard Specification for Aluminum and Aluminum-Alloy Sheet and Plate
ASTM B221	(2014) Standard Specification for Aluminum and Aluminum-Alloy Extruded Bars, Rods, Wire, Profiles, and Tubes

ASTM B26/B26M	(2012) Standard Specification for Aluminum-Alloy Sand Castings
ASTM B62	(2009) Standard Specification for Composition Bronze or Ounce Metal Castings
ASTM C150/C150M	(2012) Standard Specification for Portland Cement
ASTM C94/C94M	(2014b) Standard Specification for Ready-Mixed Concrete
ASTM D1187/D1187M	(1997; E 2011; R 2011) Asphalt-Base Emulsions for Use as Protective Coatings for Metal
ASTM D3451	(2006; R 2012) Testing Coating Powders and Powder Coatings
ASTM E488/E488M	(2010) Standard Test Methods for Strength of Anchors in Concrete and Masonry Elements
ASTM F1487	(2011) Playground Equipment for Public Use

THE SOCIETY FOR PROTECTIVE COATINGS (SSPC)

SSPC Paint 25	(1997; E 2004) Zinc Oxide, Alkyd, Linseed Oil Primer for Use Over Hand Cleaned Steel, Type I and Type II

U.S. GENERAL SERVICES ADMINISTRATION (GSA)

CID A-A-1925	(Rev A; Notice 2) Shield Expansion (Nail Anchors)

1.2 SUBMITTALS

Government approval is required for submittals with a "G" designation; submittals not having a "G" designation are for Contractor Quality Control approval. Submit the following in accordance with Section 01 33 00 SUBMITTAL PROCEDURES:

SD-02 Shop Drawings

Assembly Instruction Drawings

SD-03 Product Data

Benches
Bicycle Racks
Testing;Ash Receptacles

SD-04 Samples

Finish

SD-07 Certificates

Primer certificate

Powder coatings certificate

1.3 QUALITY ASSURANCE

Qualify welders in accordance with AWS D1.1/D1.1M using procedures, materials, and equipment of the type required for the work.

1.3.1 Fabrication Drawings

Submit fabrication drawings showing layout(s), connections to structural system, and anchoring details as specified in AISC 303.

1.3.2 Installation Drawings

Submit templates, erection and installation drawings indicating thickness, type, grade, class of metal, and dimensions. Show construction details, reinforcement, anchorage, and installation.

1.3.3 Assembly Instruction Drawings

Submit assembly instruction drawings showing layout(s), connections, bolting and anchoring details in accordance with manufacturer's standards. Submit drawings showing scaled details of proposed site furnishings, elevations for each type of site furnishing; dimensions, details, and methods of mounting or anchoring; shape and thickness of materials; and details of construction.

1.3.4 Primer Certificate

Submit a certificate from the manufacturer stating that the primer conforms to requirements of SSPC Paint 25.

1.3.5 Powder Coatings Certificate

Submit a certificate from the manufacturer stating that the powder coat conforms to ASTM D3451.

1.4 DELIVERY, STORAGE, AND HANDLING

Ship items knocked-down (KD) ready for site assembly. Packaged components shall be complete including all accessories and hardware. Materials shall be delivered, handled, and stored in accordance with the manufacturer's recommendations. Site furnishings shall be inspected upon arrival at the job site for conformity to specifications and quality in accordance with paragraph MATERIALS. Protect from corrosion, staining, and other types of damage. Store items in designated area free from contact with soil and weather. Remove and replace damaged items with new items.

PART 2 PRODUCTS

2.1 MATERIALS

Provide materials which are the standard products of a manufacturer regularly engaged in the manufacture of such products. The materials provided shall be of a type with proven satisfactory usage for at least 2 years.

2.1.1 Metals

Metallic materials and products shall conform to Section 05 50 13 MISCELLANEOUS METAL FABRICATIONS. Furnish metal components with factory drilled holes and free of excess weld and spatter. Metal components with holes that will not be filled by hardware or hidden by other components will be rejected. Structural steel products shall conform to ASTM A36/A36M, ASTM A500/A500M and ASTM A501.

2.1.2 Structural Tubing

ASTM A500/A500M

2.1.3 Steel Pipe and Fittings

Steel pipe shall conform to ASTM A53/A53M, Type E or S, Grade B; standard malleable iron fittings shall conform to ASTM A47/A47M.

2.1.4 Gray Cast Iron

Gray cast iron shall conform to ASTM A48/A48M Class 35 or better. Provide castings manufactured true to pattern and component parts that fit together in a satisfactory manner. Castings shall be of uniform quality, free from blowholes, porosity, hard spots, shrinkage, distortion, or other defects. Smooth castings shall be well-cleaned by sand or shot blasting.

2.1.5 Cast Aluminum

Cast aluminum shall conform to ASTM B26/B26M and ASTM B108/B108M. Provide castings manufactured true to pattern and component parts that fit together in a satisfactory manner. Provide castings of uniform quality, free from blowholes, porosity, hard spots, shrinkage, distortion, or other defects. Smooth castings shall be well-cleaned by sand or shot blasting.

2.1.6 Aluminum Alloy Products

Conform to ASTM B209 for sheet plate, ASTM B221 for extrusions and ASTM B26/B26M or ASTM B108/B108M for castings, as applicable. Provide aluminum extrusions at least 1/8 inch thick and aluminum plate or sheet at least 0.050 inch thick.

2.1.7 Anchors and Hardware

Provide anchors, where necessary, for fastening site furnishings securely in place and in accordance with approved manufacturer's instructions. Anchoring devices that may be used, when no anchors are otherwise specified or indicated, include anchor bolts, slotted inserts, expansion shields for concrete; toggle bolts and through bolts for masonry; machine carriage bolts for steel; and lag bolts and screws for wood. Anchor bolts shall conform to ASTM A307. Hardware shall be stainless steel or galvanized steel in accordance with ASTM A153/A153M and compatible with the material to which applied. All exposed hardware shall match in color and finish. Mounting hardware shall be concealed, recessed, and plugged.

2.1.7.1 Threaded Inserts and Expansion Anchors

Provide inserts recessed not less than 2.5 inches into concrete or masonry. Pullout 198 pounds in concrete with f'c of 3,000 psi, as tested in accordance with ASTM E488/E488M. Expansion shields shall conform to

CID A-A-1925, group II, type 4, class 1. Provide embedment required by manufacturer.

2.1.7.2 Lag Screws and Bolts

ASME B18.2.1, type and grade best suited for the purpose.

2.1.7.3 Toggle Bolts

ASME B18.2.1.

2.1.7.4 Bolts, Nuts, Studs and Rivets

ASME B18.2.2 or ASTM A307.

2.1.7.5 Power Driven Fasteners

Follow safety provisions of ASSE/SAFE A10.3.

2.1.7.6 Screws

ASME B18.2.1, ASME B18.6.2, and ASME B18.6.3.

2.1.7.7 Washers

Provide plain washers to conform to ASME B18.21.1. Provide beveled washers for American Standard beams and channels, square or rectangular, tapered in thickness, and smooth. Provide lock washers to conform to ASME B18.21.1.

2.1.8 Ounce Metals

Bronze, copper, and other ounce metals shall conform to ASTM B62.

2.1.9 Concrete

Ready-mixed concrete shall conform to ASTM C94/C94M, using 3/4 inch maximum size aggregate, and having minimum compressive strength of 3000 psi at 28 days. Portland cement shall conform to ASTM C150/C150M. Cast-in-place concrete materials and products shall conform to Section 03 30 00 CAST-IN-PLACE CONCRETE. Reinforcing steel shall conform to ASTM A615/A615M. Welded wire fabric shall conform to ASTM A1064/A1064M.

2.2 COATINGS AND FINISHES

2.2.1 Galvanizing

Hot-dip galvanize items specified to be zinc-coated, after fabrication where practicable. Galvanizing shall conform to ASTM A123/A123M, ASTM A153/A153M or ASTM A653/A653M, as applicable. Tailings and sharp protrusions formed as a result of the hot-dip process shall be removed and exposed edges burnished. Galvanize anchor bolts, grating fasteners, washers and parts or devices necessary for proper installation, unless otherwise indicated.

2.2.2 Polyester Powder

Powder-coated surfaces shall receive electrostatic zinc coating prior to painting. Powder coating shall be electrostatically applied and oven cured. Polyester powder coating shall be resistant to ultraviolet (UV)

light.

2.2.3 Polyvinyl-Chloride (PVC)

PVC coating shall be primed with a clear acrylic thermosetting solution. The primed parts shall be preheated prior to dipping. The liquid polyvinyl chloride shall be ultraviolet (UV) stabilized and mold-resistant. The coated parts shall be cured. The coating shall be a minimum 2/25 inches thick plus or minus 0.020 inches and shall have an 85 durometer hardness with a slip-resistant finish.

2.2.4 Finish

Finish shall be as specified by the manufacturer or as indicated. Exposed surfaces and edges shall be rounded, polished, or sanded. Finish shall be non-toxic, non-glare, and resistant to corrosion. Exposed surfaces shall be smooth and splinter-free exposed surfaces. Submit four sets of color data for each furnishing displaying manufacturer's color selections and finishes, and identifying those colors and finishes proposed for use.

2.2.4.1 Wood Sealants

Exposed wood surfaces shall have, as a minimum, two shop coats of paint, varnish, sealer, or other approved preservative. Sealants shall seal all applied surfaces from air.

2.2.4.2 Paint

Paint shall be factory applied with a minimum of 2 coats. Paint shall be weather-resistant and resistant to cracking, peeling and fading.

2.2.4.3 Color

Color of site furnishing components shall be as indicated.

2.3 SITE STANDARDS

Site furnishings shall be furnished with the dimensions and requirements indicated. Site furnishings placed in children's outdoor play areas shall meet the safety requirements of ASTM F1487 for entrapment; sharp points, edges, and protrusions; entanglement; pinch, crush, and shear points. Site furnishings to be included in children's outdoor play areas shall be free from sharp vertical edges and any protruding elements and designed with a minimum radius of 1/2 inch on all vertical edges; this includes, but is not limited to, seat walls, containment curbs and planters. Where practical, horizontal edges exposed to children's activities shall be rounded.

2.4 BENCHES

Furnish benches with no sharp edges or protruding hardware.

a. Height: The height above finished grade or specified surface shall be between 18-20 inches and level.

b. Seat: The seat surface shall be pitched or slotted to shed water; the seat depth shall be between 12-18 inches and pitched down at the back at a 0-5 degree angle. Seat shall have a minimum width of 24 inches per person, and shall overhang the support base by a minimum of 4 inches for heel space and to facilitate rising from a seating position.

c. Back Rest: When back rests are required, the height shall be between 15-18 inches from the top of the seat and the connection shall be at a 90-110 degree angle to the seat.

d. Arm Rest: When arm rests are required, a minimum of 6 inches height from the seat and a minimum arm rest width of 1-1/2 inches shall be provided.

e. Weight Limit: Seats shall support a minimum 300 lbs for each person they are designed to accommodate.

2.4.1 Steel Units

2.4.1.1 Perforated Steel

Provide 14 gage perforated steel sheet, electrostatically coated with two component polyester enamel.

a. Design bench to sustain a live load of not less than 200 pounds per square foot.

b. Provide 3/8 inch thick by 4 inch wide hot rolled steel pedestals conforming to ASTM A653/A653M.

c. Provide 1-1/2 inch O.D. ASTM A53/A53M schedule 40 steel pipe pedestals.

2.4.1.2 All-Welded Wire

Provide all-welded wire construction of 9 gage, 11 gage wire with 1/2 inch clear spacing and 5/16 inch wire with 2 1/2 inch spacing.

a. Design benches to sustain a live load of not less than 200 pounds per square foot.

b. Provide one inch O.D. by 18 gage 1-1/2 inch O.D. by 16 gage galvanized tubing for bench frames.

c. Provide 1-1/2 inch O.D. by 11 gage galvanized tubing for armrest.

d. Provide cadmium or zinc plated hardware; nuts, bolts, screws, and lock washers with a clean chromate finish.

2.4.2 Aluminum Units

AA DAF45. Provide extruded formed aluminum benches in accordance with manufacturers standard, with bronze powder coat finish, color as selected from manufacturer's standards.

a. Design benches to sustain a live load of not less than 200 pounds per square foot.

b. Provide manufacturer's standard steel pedestals.

2.4.3 Accessories

Provide manufacturer's standard materials and accessories as required for assembly of units and as indicated on the assembly drawings. Provide unexposed aluminum, stainless steel or steel plates, angles and supports as

required for complete assembly. Separate dissimilar materials to prevent electrolytic action.

2.4.4 Fasteners

Provide concealed fasteners except where specifically approved; types as required for specific usage.

2.4.5 Anchoring Brackets

Provide 1/4 inch zinc plated steel angle anchoring brackets, 1-7/8 inch wide by 2 inches deep by 2-1/2 inches high or 1-7/8 inch wide by 3-1/2 inch deep by 6 inch high, pre-drilled for bolting benches to substrate.

2.5 BICYCLE RACKS

Design bicycle racks (stanchions) in accordance with manufacturer's standards and to meet design conditions indicated. Locate as shown on the drawings. Provide powder coat finish in color as selected from manufacturer's standards. Racks shall accommodate locking devices and secure, as a minimum, one wheel and part of the frame simultaneously. The spacing between racks shall be a minimum of 24 inches.

2.6 ASH RECEPTACLES;

2.6.1 Ash Receptacles

Provide ash receptacles with a fire-proof metal bowl or screen or sand-filled containers for ash containment. Ash receptacles shall have a minimum diameter of 8 inches; ash containers shall have a fire-proof metal bowl or screen and shall be easily removable for cleaning.

PART 3 EXECUTION

3.1 INSTALLATION

Verify that finished grades and other operations affecting mounting surfaces have been completed prior to the installation of site furnishings. Site furnishings shall be installed plumb and true, at locations indicated,in accordance with the approved manufacturer's instructions.

3.1.1 Assembly and Erection of Components

New parts shall be acquired from the manufacturer; substitute parts will not be accepted unless approved by the manufacturer. When the inspection of parts has been completed, the site furnishings shall be assembled and anchored according to manufacturer's instructions or as indicated. When site furnishings are assembled at the site, assembly shall not interfere with other operations or pedestrian and vehicular circulation.

3.1.2 Anchorage, Fastenings, and Connections

Furnish metal work, mounting bolts or hardware in ample time for securing into concrete or masonry as the work progresses. Provide anchorage where necessary for fastening furniture or furnishings securely in place. Provide, for anchorage not otherwise specified or indicated, slotted inserts, expansion shields, and power-driven fasteners, when approved for concrete; toggle bolts and through bolts for masonry; machine and carriage

bolts for steel; through bolts, lag bolts, and screws for wood. Do not use wood plugs in any material. Provide non-ferrous attachments for non-ferrous metal. Make exposed fastenings of compatible materials, generally matching in color and finish the fastenings to which they are applied. Conceal fastenings where practicable.

3.2 WELDING

Perform welding, welding inspection, and corrective welding, in accordance with AWS D1.1/D1.1M. Use continuous welds on all exposed connections. Grind visible welds smooth in the finished installation.

3.3 TESTING

Test each site furnishing to ascertain a secure and correct installation. A correct installation shall be according to the manufacturer's recommendations and by the following procedure: Measure the physical dimensions and clearance of each installed site furnishing for compliance with manufacturer's recommendations and as indicated. Site furnishings which do not comply shall be reinstalled. Fasteners and anchors determined to be non-compliant shall be replaced. Submit a written report describing the results of the testing and a report of post-installation test results.

3.4 FINISHES

3.4.1 Field Finishes

Where indicated, field finishes shall be applied in accordance with Section 09 90 00 PAINTS AND COATINGS. Where dissimilar metals are in contact, protect surfaces with a coat conforming to SSPC Paint 25 to prevent galvanic or corrosive action. Where aluminum is in contact with concrete, mortar, masonry, wood, or absorptive materials subject to wetting, protect with ASTM D1187/D1187M, asphalt-base emulsion.

3.4.2 Repair of Zinc-Coated Surfaces

Repair damaged surfaces with galvanizing repair method and paint conforming to ASTM A780/A780M or by the application of stick or thick paste material specifically designed for repair of galvanizing, as approved by the Contracting Officer. Clean areas to be repaired and remove the slag from the welds. Heat surfaces to which stick or paste material is applied, with a torch to a temperature sufficient to melt the metallics in stick or paste; spread the molten material uniformly over surfaces to be coated and wipe the excess material off.

3.5 BICYCLE RACKS

Affix to base structure by flanges anchored to concrete or other existing masonry by expansion shields. Provide Series 300 stainless steel bolts to anchor aluminum alloy flanges, of a size appropriate to the standard product of the manufacturer. Where aluminum or alloy fittings or extrusions are to be in contact with dissimilar metals or concrete, give the contact surface a heavy coating of bituminous paint.

3.6 BENCHES AND ASH RECEPTACLES

Secure to the adjacent construction as indicated.

3.7 RESTORATION AND CLEAN UP

When the installation has been completed, clean up and protect the site. Existing areas that have been damaged from the installation operation shall be restored to original condition at Contractor's expense.

3.7.1 Clean Up

The site shall be cleaned of all materials associated with the installation. Site furnishing surfaces shall be cleaned of dirt, stains, filings, and other blemishes occurring from shipment and installation. Cleaning methods and agents shall be according to manufacturer's instructions or as indicated.

3.7.2 Protection

The area shall be protected as required or directed by providing barricades and signage. Signage shall be in accordance with Section 10 14 01 EXTERIOR SIGNAGE.

3.7.3 Disposal of Materials

Excess and waste material shall be removed and disposed off Government property.

3.8 RE-INSTALLATION

Where re-installation is required, the following shall be accomplished:

a. Re-install the product as specified. Material acquisition of replacement parts is the responsibility of the Contractor. Provide replacement materials that are new and supplied by the original manufacturer to match.

b. Damage caused by the failed installation shall be repaired.

-- End of Section --

THIS PAGE HAS BEEN INTENTIONALLY LEFT BLANK

SECTION 13 34 19

METAL BUILDING SYSTEMS
11/11

PART 1 GENERAL

1.1 REFERENCES

The publications listed below form a part of this specification to the extent referenced. The publications are referred to within the text by the basic designation only.

AMERICAN ARCHITECTURAL MANUFACTURERS ASSOCIATION (AAMA)

AAMA/WDMA/CSA 101/I.S.2/A440	(2011) Standard/Specification for Windows, Doors, and Skylights

AMERICAN INSTITUTE OF STEEL CONSTRUCTION (AISC)

AISC 325	(2011) Steel Construction Manual
AISC 341	(2010) Seismic Provisions for Structural Steel Buildings
AISC 360	(2010) Specification for Structural Steel Buildings

AMERICAN IRON AND STEEL INSTITUTE (AISI)

AISC/AISI 121	(2004) Standard Definitions for Use in the Design of Steel Structures
AISI SG03-3	(2002; Suppl 2001-2004; R 2008) Cold-Formed Steel Design Manual Set

AMERICAN SOCIETY OF CIVIL ENGINEERS (ASCE)

ASCE 7	(2010; Errata 2011; Supp 1 2013) Minimum Design Loads for Buildings and Other Structures

AMERICAN WELDING SOCIETY (AWS)

AWS A5.1/A5.1M	(2012) Specification for Carbon Steel Electrodes for Shielded Metal Arc Welding
AWS D1.1/D1.1M	(2010; Errata 2011) Structural Welding Code - Steel
AWS D1.3/D1.3M	(2008; Errata 2008) Structural Welding Code - Sheet Steel

ASTM INTERNATIONAL (ASTM)

ASTM A1008/A1008M	(2015) Standard Specification for Steel, Sheet, Cold-Rolled, Carbon, Structural, High-Strength Low-Alloy and High-Strength

	Low-Alloy with Improved Formability, Solution Hardened, and Bake Hardened
ASTM A1011/A1011M	(2014) Standard Specification for Steel, Sheet, and Strip, Hot-Rolled, Carbon, Structural, High-Strength Low-Alloy and High-Strength Low-Alloy with Improved Formability and Ultra-High Strength
ASTM A123/A123M	(2013) Standard Specification for Zinc (Hot-Dip Galvanized) Coatings on Iron and Steel Products
ASTM A307	(2012) Standard Specification for Carbon Steel Bolts and Studs, 60 000 PSI Tensile Strength
ASTM A325	(2010; E 2013) Standard Specification for Structural Bolts, Steel, Heat Treated, 120/105 ksi Minimum Tensile Strength
ASTM A36/A36M	(2014) Standard Specification for Carbon Structural Steel
ASTM A463/A463M	(2010) Standard Specification for Steel Sheet, Aluminum-Coated, by the Hot-Dip Process
ASTM A500/A500M	(2013) Standard Specification for Cold-Formed Welded and Seamless Carbon Steel Structural Tubing in Rounds and Shapes
ASTM A501	(2007) Standard Specification for Hot-Formed Welded and Seamless Carbon Steel Structural Tubing
ASTM A529/A529M	(2005; R 2009) Standard Specification for High-Strength Carbon-Manganese Steel of Structural Quality
ASTM A53/A53M	(2012) Standard Specification for Pipe, Steel, Black and Hot-Dipped, Zinc-Coated, Welded and Seamless
ASTM A563	(2007a; R2014) Standard Specification for Carbon and Alloy Steel Nuts
ASTM A563M	(2007; R 2013) Standard Specification for Carbon and Alloy Steel Nuts (Metric)
ASTM A572/A572M	(2013a) Standard Specification for High-Strength Low-Alloy Columbium-Vanadium Structural Steel
ASTM A606/A606M	(2009a) Standard Specification for Steel Sheet and Strip, High-Strength, Low-Alloy, Hot-Rolled and Cold-Rolled, with Improved Atmospheric Corrosion Resistance

ASTM A653/A653M	(2015) Standard Specification for Steel Sheet, Zinc-Coated (Galvanized) or Zinc-Iron Alloy-Coated (Galvannealed) by the Hot-Dip Process
ASTM A755/A755M	(2011) Standard Specification for Steel Sheet, Metallic Coated by the Hot-Dip Process and Prepainted by the Coil-Coating Process for Exterior Exposed Building Products
ASTM A780/A780M	(2009) Standard Practice for Repair of Damaged and Uncoated Areas of Hot-Dip Galvanized Coatings
ASTM A792/A792M	(2010) Standard Specification for Steel Sheet, 55% Aluminum-Zinc Alloy-Coated by the Hot-Dip Process
ASTM A992/A992M	(2011) Standard Specification for Structural Steel Shapes
ASTM B117	(2011) Standard Practice for Operating Salt Spray (Fog) Apparatus
ASTM B209	(2014) Standard Specification for Aluminum and Aluminum-Alloy Sheet and Plate
ASTM B221	(2014) Standard Specification for Aluminum and Aluminum-Alloy Extruded Bars, Rods, Wire, Profiles, and Tubes
ASTM B221M	(2013) Standard Specification for Aluminum and Aluminum-Alloy Extruded Bars, Rods, Wire, Profiles, and Tubes (Metric)
ASTM C1136	(2012) Standard Specification for Flexible, Low Permeance Vapor Retarders for Thermal Insulation
ASTM C1363	(2011) Standard Test Method for Thermal Performance of Building Materials and Envelope Assemblies by Means of a Hot Box Apparatus
ASTM C518	(2010) Steady-State Thermal Transmission Properties by Means of the Heat Flow Meter Apparatus
ASTM C920	(2014a) Standard Specification for Elastomeric Joint Sealants
ASTM C991	(2008; E 2008) Flexible Glass Fiber Insulation for Metal Buildings
ASTM D1056	(2014) Standard Specification for Flexible Cellular Materials - Sponge or Expanded Rubber

ASTM D1308	(2013) Effect of Household Chemicals on Clear and Pigmented Organic Finishes
ASTM D1667	(2005; R 2011) Flexible Cellular Materials - Poly (Vinyl Chloride) Foam (Closed-Cell)
ASTM D2244	(2014) Calculation of Color Tolerances and Color Differences from Instrumentally Measured Color Coordinates
ASTM D2247	(2015) Testing Water Resistance of Coatings in 100% Relative Humidity
ASTM D2794	(1993; R 2010) Resistance of Organic Coatings to the Effects of Rapid Deformation (Impact)
ASTM D3363	(2005; E 2011; R 2011; E 2012) Film Hardness by Pencil Test
ASTM D4214	(2007; R 2015) Standard Test Method for Evaluating the Degree of Chalking of Exterior Paint Films
ASTM D522/D522M	(2014) Mandrel Bend Test of Attached Organic Coatings
ASTM D523	(2014) Standard Test Method for Specular Gloss
ASTM D714	(2002; R 2009) Evaluating Degree of Blistering of Paints
ASTM D822	(2001; R 2006) Filtered Open-Flame Carbon-Arc Exposures of Paint and Related Coatings
ASTM D968	(2015) Abrasion Resistance of Organic Coatings by Falling Abrasive
ASTM DEFONLINE	(2008) ASTM Online Dictionary of Engineering Science and Technology
ASTM E119	(2014) Standard Test Methods for Fire Tests of Building Construction and Materials
ASTM E136	(2012) Behavior of Materials in a Vertical Tube Furnace at 750 Degrees C
ASTM E1592	(2005; R 2012) Structural Performance of Sheet Metal Roof and Siding Systems by Uniform Static Air Pressure Difference
ASTM E84	(2015b) Standard Test Method for Surface Burning Characteristics of Building Materials

ASTM E96/E96M	(2014) Standard Test Methods for Water Vapor Transmission of Materials
ASTM F1554	(2007a; E 2011) Standard Specification for Anchor Bolts, Steel, 36, 55, and 105-ksi Yield Strength
ASTM F1852	(2011) Standard Specification for "Twist Off" Type Tension Control Structural Bolt/Nut/Washer Assemblies, Steel, Heat Treated, 120/105 ksi Minimum Tensile Strength
ASTM F436	(2011) Hardened Steel Washers
ASTM F844	(2007a; R 2013) Washers, Steel, Plain (Flat), Unhardened for General Use
ASTM G152	(2013) Operating Open Flame Carbon Arc Light Apparatus for Exposure of Nonmetallic Materials
ASTM G153	(2013) Operating Enclosed Carbon Arc Light Apparatus for Exposure of Nonmetallic Materials

METAL BUILDING MANUFACTURERS ASSOCIATION (MBMA)

MBMA MBSM	(2002) Metal Building Systems Manual

NATIONAL ASSOCIATION OF ARCHITECTURAL METAL MANUFACTURERS (NAAMM)

NAAMM AMP 500	(2006) Metal Finishes Manual

NATIONAL FIRE PROTECTION ASSOCIATION (NFPA)

NFPA 252	(2012) Standard Methods of Fire Tests of Door Assemblies
NFPA 80	(2013) Standard for Fire Doors and Other Opening Protectives

NATIONAL ROOFING CONTRACTORS ASSOCIATION (NRCA)

NRCA RoofMan	(2011 thru 2014) The NRCA Roofing Manual

SHEET METAL AND AIR CONDITIONING CONTRACTORS' NATIONAL ASSOCIATION (SMACNA)

SMACNA 1793	(2012) Architectural Sheet Metal Manual, 7th Edition

THE SOCIETY FOR PROTECTIVE COATINGS (SSPC)

SSPC Paint 15	(1999; E 2004) Steel Joist Shop Primer
SSPC Painting Manual	(2002) Good Painting Practice, Steel Structures Painting Manual, Volume 1

SSPC SP 2 (1982; E 2000; E 2004) Hand Tool Cleaning

UNDERWRITERS LABORATORIES (UL)

UL Bld Mat Dir (2012) Building Materials Directory

1.2 GENERAL REQUIREMENTS

1.2.1 Structural Performance

Provide metal building systems capable of withstanding the effects of gravity loads and the following loads and stresses within the limits and conditions indicated.

1.2.1.1 Engineering

Design metal building systems conforming to procedures described in MBMA MBSM.

1.2.1.2 Design Loads

Conform to the requirements of MBMA MBSM, ASCE 7, and the building code applicable to the project geographical location.

1.2.1.3 Live Loads

Include all vertical loads induced by the building occupancy indicated on the drawings, as well as loads induced by maintenance workers, materials and equipment for roof live loads.

1.2.1.4 Roof Snow Loads

Include vertical loads induced by the ground snow load at the project site of 10 psf. Allow for unbalanced and drift loads.

1.2.1.5 Wind Loads

Include horizontal loads induced by a basic wind speed Project site of 140mph.

1.2.1.6 Collateral Loads

Include additional dead loads other than the weight of metal building system for permanent items such as sprinklers, mechanical systems, electrical systems, and ceilings.

1.2.1.7 Auxiliary Loads

Include dynamic live loads, such as those generated by cranes and materials-handling equipment indicated on detail drawings.

1.2.1.8 Load Combinations

Design metal building systems to withstand the most critical effects of load factors and load combinations as required by MBMA MBSM, ASCE 7, and the building code applicable to the project location.

1.2.1.9 Deflection Limits

Engineer assemblies to withstand design loads with deflections no greater than the following:

a. Purlins and Rafters; vertical deflection of 1/240 of the span.

b. Girts; horizontal deflection of 1/240 of the span.

c. Metal Roof Panels; vertical deflection of 1/240 of the span.

d. Metal Wall Panels; horizontal deflection of 1/240 of the span.

Design secondary framing system to accommodate deflection of primary building structure and construction tolerances, and to maintain clearances at openings. Provide metal panel assemblies capable of withstanding the effects of loads and stresses indicated, based on testing according to ASTM E1592.

1.2.2 Seismic Performance

Design and engineer metal building system capable of withstanding the effects of earthquake motions determined according to ASCE 7, AISC 341, and the applicable portions of the building code in the geographic area where the construction will take place.

1.2.3 Thermal Movements

Provide metal panel systems that allow for thermal movements resulting from the following maximum change (range) in ambient and surface temperatures by preventing buckling, opening of joints, overstressing of components, failure of joint sealants, failure of connections, and other detrimental effects. Base engineering calculation on surface temperatures of materials due to both solar heat gain and nighttime-sky heat loss as follows:

Temperature Change (Range); 120 F, ambient; 180 F, material surfaces.

1.2.4 Thermal Performance

Provide insulated metal panel assemblies with the following maximum U-factors and minimum R-values for opaque elements when tested according to ASTM C1363 or ASTM C518.

1.2.4.1 Metal Roof Panel Assemblies

a. R-Value: as per drawings

1.2.4.2 Metal Wall Panel Assemblies

a. R-Value: as per drawings

1.2.5 Wind-Uplift Resistance

Provide metal roof panel assemblies that comply with ASCE 7.

1.3 DEFINITIONS

ASTM DEFONLINE applies to this definition paragraph.

a. Bay: Dimension between main frames measured normal to frame (at centerline of frame) for interior bays, and dimension from centerline of first interior main frame measured normal to end wall (outside face of end-wall girt) for end bays.

b. Building Length: Dimension of the building measured perpendicular to main framing from end wall to end wall (outside face of girt to outside face of girt).

c. Building Width: Dimension of the building measured parallel to main framing from sidewall to sidewall (outside face of girt to outside face of girt).

d. Clear Span: Distance between supports of beams, girders, or trusses (measured from lowest level of connecting area of a column and a rafter frame or knee).

e. Eave Height: Vertical dimension from finished floor to eave (the line along the sidewall formed by intersection of the planes of the roof and wall).

f. Clear Height under Structure: Vertical dimension from finished floor to lowest point of any part of primary or secondary structure, not including crane supports, located within clear span.

g. Terminology Standard: Refer to MBMA "Metal Building Systems Manual" for definitions of terms for metal building system construction not otherwise defined in this Section or in referenced standards.

1.4 SYSTEM DESCRIPTION

General: Provide a complete, integrated set of metal building system manufacturer's standard mutually dependent components and assemblies that form a metal building system capable of withstanding structural and other loads, thermally induced movement, and exposure to weather without failure or infiltration of water into building interior. Include primary and secondary framing, metal roof panels, metal wall panels, and accessories complying with requirements indicated.

Provide metal building system of size and with spacing, slopes, and spans indicated.

1.4.1 Primary Frame Type

a. Rigid Clear Span: Solid-member, structural-framing system without interior columns.

b. Rigid Modular: Solid-member, structural-framing system with interior columns.

1.4.2 Fixed End-Wall Framing

Provide manufacturer's standard fixed end wall, for buildings not required to be expandable, consisting of primary frame, capable of supporting one-half of a bay design load, and end-wall columns.

1.4.3 Secondary Frame Type

Provide manufacturer's standard purlins, and exterior-framed (bypass) girts.

1.4.4 Eave Height

Eave height must beManufacturer's standard height, as indicated by nominal height on Drawings.

1.4.5 Bay Spacing

Bay Spacing must be as indicated on drawings.

1.4.6 Roof Slope

Roof slope must beas indicated on drawings.

1.4.7 Roof System

Provide manufacturer's standard standing-seam metal roof panels. The roof thickness shall not be less than 22 gage. Roof purlin wall Z girt and gage shall be shown on the pre-engineered building shop drawings.

1.4.8 Exterior Wall System

Provide manufacturer's standard field-assembled, insulated metal wall panels.

1.5 SUBMITTALS

Government approval is required for submittals with a "G" designation; submittals not having a "G" designation are for Contractor Quality Control approval. Submit the following in accordance with Section 01 33 00 SUBMITTAL PROCEDURES:

SD-01 Preconstruction Submittals

Manufacturer's Qualifications; G

SD-02 Shop Drawings

Detail Drawings; G

SD-03 Product Data

Manufacturer's catalog data ; G

Insulation System; G

SD-04 Samples

Roof Panels, 12 inches long by actual panel width; G

Wall Panels, 12 inches long by actual panel width; G

Fasteners; G

Metal Closure Strips 10 inches long of each type; G

Vapor Barrier; G

Manufacturer's color charts and chips, 4 by 4 inches; G

SD-05 Design Data

Manufacturer's descriptive and technical literature; G

Manufacturer's building design analysis; G

SD-06 Test Reports

test reports; G

Coatings and base metals ; G

Factory Color Finish Performance Requirements; G

SD-07 Certificates

Qualification of Manufacturer; G

Qualification of Erector; G

SD-08 Manufacturer's Instructions

Installation of Roof and Wall panels; G

shipping, handling, and storage; G

SD-11 Closeout Submittals

Manufacturer's Warranty; G

Contractor's Warranty for Installation; G

1.6 QUALITY ASSURANCE

1.6.1 Pre-Erection Conference

After submittals are received and approved but before metal building system work, including associated work, is performed, the Contractor will hold a pre-erection conference to review the following:

a. The detail drawings, specifications, and manufacturer's descriptive and technical literature.

b. Finalize construction schedule and verify availability of materials, erector's personnel, equipment, and facilities needed to make progress and avoid delays.

c. Methods and procedures related to metal building system erection, including, but not limited to: qualification of manufacturer, qualification of erector, manufacturer's catalog data, building design analysis, written instructions and test reports.

d. Support conditions for compliance with requirements, including alignment between and erection of structural members.

e. Flashing, special roofing and siding details, roof and wall penetrations, openings, and condition of other construction that will affect metal building system, including coatings and base metals,

factory color finish performance requirements.

f. Governing regulations and requirements for, certificates, insurance, tests and inspections if applicable.

g. Temporary protection requirements for metal panel assembly during and after installation.

1.6.1.1 Pre-Roofing and Siding Installation Conference

After structural framing system erection and approval but before roofing, siding, insulation and vapor barrier work, including associated work, is performed; the Contractor will hold a pre-roofing and siding conference to review the following:

a. Examine purlins, sub-girts and formed shapes conditions for compliance with requirements, including flatness and attachment to structural members.

b. Review structural limitations of purlins, sub-girts and formed shapes during and after roofing and siding.

c. Review flashings, special roof and wall details, roof drainage, roof and wall penetrations, roof equipment curbs, and condition of other construction that will affect the metal building system.

d. Review temporary protection requirements for metal roof and wall panels' assembly during and after installation.

e. Review roof and wall observation and repair procedures after metal building system erection.

1.6.2 Manufacturer's Technical Representative

The representative must have authorization from manufacturer to approve field changes and be thoroughly familiar with the products, erection of structural framing and installation of roof and wall panels in the geographical area where construction will take place.

1.6.3 Manufacturer's Qualifications

Metal building system manufacturer must have a minimum of five (5) years experience as a qualified manufacturer and a member of MBMA of metal building systems and accessory products.

Provide engineering services by an authorized currently licensed engineer in the geographical area where construction will take place, having a minimum of four years experience as an engineer knowledgeable in building design analysis, protocols and procedures for the "Metal Building Systems Manual" (MBMA MBSM); ASCE 7, the building code in the geographic area where the construction will take place and ASTM E1592.

Provide certified engineering calculations using the products submitted for:

a. Roof and Wall Wind Loads with basic wind speed, exposure category, co-efficient, importance factor, designate type of facility, negative pressures for each zone, methods and requirements of attachment.

b. Roof Dead and Live Loads

c. Collateral Loads

d. Foundation Loads

e. Roof Snow Load

f. Seismic Loads

1.6.4 Qualification of Erection Contractor

An experienced erector who has specialized in erecting and installing work similar in material, design, and extent to that indicated for this Project and must be approved and certified by the metal building system manufacturer.

1.6.5 Single Source

Obtain primary and secondary components and structural framing members, each type of metal roof, wall and liner panel assemblies, clips, closures and other accessories from the standard products of the single source from a single manufacturer to operate as a complete system for the intended use.

1.6.6 Welding

Qualify procedures and personnel according to AWS A5.1/A5.1M, AWS D1.1/D1.1M, and AWS D1.3/D1.3M.

1.6.7 Structural Steel

Comply with AISC 325, AISC 360, for design requirements and allowable stresses.

1.6.8 Cold-Formed Steel

Comply with AISC/AISI 121 and AISI SG03-3 for design requirements and allowable stresses.

1.6.9 Fire-Resistance Ratings

Where indicated, provide metal panels identical to those of assemblies tested for fire resistance per ASTM E119 by a qualified testing agency. Identify products with appropriate markings of applicable testing agency.

Indicate design designations from UL Bld Mat Dir or from the listings of another qualified testing agency. Combustion Characteristics must conform to ASTM E136.

1.6.10 Surface-Burning Characteristics

Provide metal panels having insulation and vapor barrier material with the following surface-burning characteristics as determined by testing identical products according to ASTM E84 by a qualified testing agency. Identify products with appropriate markings of applicable testing agency showing:

a. Flame-Spread Index: 25 or less.
b. Smoke-Developed Index: 450 or less.

1.6.11 Fabrication

Fabricate and finish metal panels and accessories at the factory to greatest extent possible, by manufacturer's standard procedures and processes and as necessary to fulfill indicated performance requirements. Comply with indicated profiles with dimensional and structural requirements

Provide metal panel profile, including major ribs and intermediate stiffening ribs, if any, for full length of panel. Aluminum and aluminum-alloy sheet and plate must conform to ASTM B209.

Fabricate metal panel side laps with factory-installed captive gaskets or separator strips that provide a tight seal and prevent metal-to-metal contact, in a manner that will seal weather-tight and minimize noise from movements within panel assembly.

Sheet Metal Accessories: Fabricate flashing and trim to comply with recommendations in SMACNA 1793 that apply to the design, dimensions, metal, and other characteristics of item indicated:

a. Form exposed sheet metal accessories that are without excessive oil canning, buckling, and tool marks and that are true to line and levels indicated, with exposed edges folded back to form hems.

b. End Seams: Fabricate nonmoving seams with flat-lock seams. Form seams and seal with epoxy seam sealer. Rivet joints for additional strength.

c. Sealed Joints: Form non-expansion but movable joints in metal to accommodate elastomeric sealant to comply with SMACNA standards.

d. Conceal fasteners and expansion provisions where possible. Exposed fasteners are not allowed on faces of accessories exposed to view.

e. Fabricate cleats and attachment devices of size and metal thickness recommended by SMACNA or by metal building system manufacturer for application, but not less than thickness of metal being secured.

1.6.12 Finishes

Comply with NAAMM AMP 500 for recommendations for applying and designating finishes.

Appearance of Finished Work: Noticeable variations in same piece are not acceptable. Variations in appearance of adjoining components are acceptable if they are within the range of approved Samples and are assembled or installed to minimize contrast.

1.7 SHIPPING, HANDLING AND STORAGE

1.7.1 Delivery

Package and deliver components, sheets, metal panels, and other manufactured items so as not to be damaged or deformed and protected during transportation and handling.

Stack and store metal panels horizontally on platforms or pallets, covered with suitable weather-tight and ventilated covering to ensure dryness, with positive slope for drainage of water. Store in a manner to prevent

bending, warping, twisting, and surface damage. Do not store metal wall panels in contact with other materials that might cause staining, denting, or other surface damage. Retain strippable protective covering on metal panel for entire period up to metal panel installation.

1.8 PROJECT CONDITIONS

1.8.1 Weather Limitations

Proceed with installation preparation only when existing and forecasted weather conditions permit Work to proceed without water entering into existing panel system or building.

1.8.2 Field Measurements

1.8.2.1 Established Dimensions for Foundations

Comply with established dimensions on approved anchor-bolt plans, established foundation dimensions, and proceed with fabricating structural framing. Do not proceed without verifying field measurements. Coordinate anchor-bolt installation to ensure that actual anchorage dimensions correspond to established dimensions.

1.8.2.2 Established Dimensions for Metal Panels

Where field measurements cannot be made without delaying the Work, either establish framing and opening dimensions and proceed with fabricating metal panels without field measurements, or allow for field trimming metal panels. Coordinate construction to ensure that actual building dimensions, locations of structural members, and openings correspond to established dimensions.

1.8.2.3 Verification Record

Verify locations of all framing and opening dimensions by field measurements before metal panel fabrication and indicate measurements on Shop Drawings.

1.9 COORDINATION

Coordinate size and location of concrete foundations and casting of anchor-bolt inserts into foundation walls and footings. Concrete, reinforcement, and formwork requirements are specified in Section 03 30 00 CAST-IN-PLACE CONCRETE.

Coordinate installation of fire suppression system equipment supports piping and supports and accessories, which are specified in Division 21 - FIRE SUPPRESSION.

Coordinate installation of plumbing system equipment supports piping and supports and accessories, which are specified in Division 22 - PLUMBING.

Coordinate installation of HVAC system equipment supports ductwork and supports piping and supports and accessories, which are specified in Division 23 - HEATING, VENTILATING AND AIR-CONDITIONING (HVAC).

Coordinate metal panel assemblies with rain drainage work, flashing, trim, and construction of supports and other adjoining work to provide a leak-proof, secure, and non-corrosive installation.

1.10 WARRANTY

1.10.1 Building System Warranty

Furnish manufacturer's no-dollar-limit warranty for the metal building system. The warranty period is to be no less than 20 years from the date of acceptance of the work and be issued directly to the Government. The warranty must provide that if within the warranty period, the metal building system shows evidence of deterioration resulting from defective materials and/or workmanship, correcting of any defects is the responsibility of the metal building system manufacturer. Repairs that become necessary because of defective materials and workmanship while metal building system is under warranty are to be performed within 72 hours after notification, unless additional time is approved by the Contracting Officer. Failure to perform repairs within 72 hours of notification will constitute grounds for having emergency repairs performed by others and will not void the warranty.

1.10.2 Roof System Weather-Tightness Warranty

Furnish manufacturer's no-dollar-limit warranty for the metal panel system. The warranty period is to be no less than 20 years from the date of acceptance of the work and be issued directly to the Government.

The warranty is to provide that if within the warranty period the roof panel system shows evidence of corrosion, perforation, rupture, lost of weather-tightness or excess weathering due to deterioration of the panel system resulting from defective materials and correction of the defective workmanship is to be the responsibility of the metal building system manufacturer.

Repairs that become necessary because of defective materials and workmanship while roof panel system is under warranty are to be performed within 72 hours after notification, unless additional time is approved by the Contracting Officer. Failure to perform temporary repairs within 72 hours of notification will constitute grounds for having emergency repairs performed by others and not void the warranty. Immediate follow-up and completion of permanent repairs must be performed within 14 days from date of notification.

1.10.3 Roof and Wall Panel Finish Warranty

Furnish manufacturer's no-dollar-limit warranty for the metal panel system. The warranty period is to be no less than 20 years from the date of acceptance of the work and be issued directly to the Government.

The warranty is to provide that if within the warranty period the metal panel system shows evidence of checking, delaminating cracking, peeling, chalk in excess of a numerical rating of eight, as determined by ASTM D4214 test procedures; or change colors in excess of five CIE or Hunter units in accordance with ASTM D2244 or excess weathering due to deterioration of the panel system resulting from defective materials and finish or correction of the defective workmanship is to be the responsibility of the metal building system manufacturer.

Liability under this warranty is exclusively limited to replacing the defective coated materials.

Repairs that become necessary because of defective materials and workmanship while roof and wall panel system is under warranty are to be performed within 72 hours after notification, unless additional time is approved by the Contracting Officer. Failure to perform repairs within 72 hours of notification will constitute grounds for having emergency repairs performed by others and not void the warranty.

PART 2 PRODUCTS

2.1 STRUCTURAL FRAMING MATERIALS

2.1.1 W-Shapes

ASTM A992/A992M.

2.1.2 Channel, Angles, M-Shapes and S-Shapes

ASTM A36/A36M.

2.1.3 Plate and Bar

ASTM A36/A36M.

2.1.4 Steel Pipe

ASTM A36/A36M, ASTM A53/A53M, ASTM A572/A572M or ASTM A529/A529M.

2.1.5 Cold-Formed and Hot Formed Hollow Structural Sections

Cold formed:ASTM A500/A500M or ASTM B221, ASTM B221M. Hot-formed: ASTM A501.

2.1.6 Structural-Steel Sheet

Hot-rolled, ASTM A1011/A1011M or cold-rolled, ASTM A1008/A1008M.

2.1.7 Metallic-Coated Steel Sheet

ASTM A653/A653M, ASTM A606/A606M.

2.1.8 Metallic-Coated Steel Sheet Pre-painted

Steel sheet metallic coated by the hot-dip process and pre-painted by the coil-coating process to comply with ASTM A755/A755M.

a. Zinc-Coated (Galvanized) Steel Sheet: ASTM A653/A653M, and ASTM A123/A123M.

b. Aluminum-Zinc Alloy-Coated Steel Sheet: ASTM A792/A792M, and ASTM A463/A463M.

2.1.9 High-Strength Bolts, Nuts, and Washers

ASTM A325, heavy hex steel structural bolts; ASTM A563 heavy hex carbon-steel nuts; and ASTM F436 hardened carbon-steel washers.

Finish: Plain.

Tension-Control, High-Strength Bolt-Nut-Washer Assemblies: ASTM F1852, heavy-hex-head steel structural bolts with spline.

Finish: Plain.

2.1.10 Non-High-Strength Bolts, Nuts, and Washers

ASTM A307, ASTM A563, and ASTM F844.

Finish: Plain.

2.1.11 Anchor Rods

ASTM F1554.

a. Configuration: Straight.
b. Nuts: ASTM A563 hex carbon steel.
c. Plate Washers: ASTM A36/A36M carbon steel.
d. Washers: ASTM F436 hardened carbon steel.
e. Finish: Plain.

2.1.12 Threaded Rods

ASTM A36/A36M.

a. Nuts: ASTM A563 hex carbon steel.
b. Washers: ASTM A36/A36M carbon steel.
c. Finish: Plain.

2.1.13 Primer

SSPC-Paint 15, Type I, red oxide.

2.2 FABRICATION

2.2.1 General

Comply with MBMA MBSM - "Metal Building Systems Manual": Chapter IV, Section 9, "Fabrication and Erection Tolerances."

2.3 STRUCTURAL FRAMING

2.3.1 General

Clean all framing members to remove loose rust and mill scale. Provide 1 shop coat of primer to an average dry film thickness of 1 mil according to SSPC SP 2. Balance of painting and coating procedures must conform to SSPC Paint 15 and SSPC Painting Manual.

2.3.2 Primary Framing

Manufacturer's standard structural primary framing system includes transverse and lean-to frames; rafter, rakes, and canopy beams; sidewall, intermediate, end-wall, and corner columns; and wind bracing designed to withstand required loads and specified requirements. Provide frames with attachment plates, bearing plates, and splice members. Provide frame span and spacing indicated.

Shop fabricate framing components by welding or by using high-strength bolts to the indicated size and section with base-plates, bearing plates, stiffeners, and other items required. Cut, form, punch, drill, and weld

framing for bolted field erection.

a. Rigid Clear-Span Frames: I-shaped frame sections fabricated from shop-welded, built-up steel plates or structural-steel shapes. Interior columns are not permitted.

b. Rigid Modular Frames: I-shaped frame sections fabricated from shop-welded, built-up steel plates or structural-steel shapes. Provide interior columns fabricated from steel round pipe steel tube shop-welded, or built-up steel plates.

c. Frame Configuration: Single gable.

d. Exterior Column Type: Tapered.

e. Rafter Type: Tapered.

2.3.3 Secondary Framing

Manufacturer's standard secondary framing members, including purlins, girts, eave struts, flange bracing, base members, gable angles, clips, headers, jambs, and other miscellaneous structural members. Fabricate framing from cold-formed, structural-steel sheet or roll-formed, metallic-coated steel sheet pre-painted with coil coating, unless otherwise indicated.

Shop fabricate framing components by roll-forming or break-forming to the indicated size and section with base-plates, bearing plates, stiffeners, and other plates required for erection. Cut, form, punch, drill, and weld secondary framing for bolted field connections to primary framing.

a. Purlins: Z-shaped sections; fabricated from 50,000 psi steel sheet. Shapes are limited to 12, 14, and 16 gage 823 and 1023, spaced 6-8 feet on canter.

b. Girts: Z-shaped sections; fabricated from steel sheet. Shapes are limited to 12, 14, and 16 gage 823 and 1023, spaced 6-8 feet on canter.

c. Eave Struts: Unequal-flange, C-shaped sections; fabricated from steel sheet, built-up steel plates, or structural-steel shapes; to provide adequate backup for metal panels.

d. Flange Bracing: Structural-steel angles or cold-formed structural tubing to stiffen primary frame flanges.

e. Sag Bracing: Structural-steel angles.

f. Base or Sill Angles: Zinc-coated (galvanized) steel sheet.

g. Purlin and Girt Clips: Steel sheet. Provide galvanized clips where clips are connected to galvanized framing members.

h. Secondary End-Wall Framing: Manufacturer's standard sections fabricated from structural-steel sheet.

i. Framing for Openings: Channel shapes; fabricated cold-formed, structural-steel sheet or structural-steel shapes. Frame head and jamb of door openings, and head, jamb, and sill of other openings.

j. Miscellaneous Structural Members: Manufacturer's standard sections fabricated from cold-formed, structural-steel sheet; built-up steel plates; or zinc-coated (galvanized) steel sheet; designed to withstand required loads.

2.3.4 Bracing

Provide adjustable wind bracing as follows:

a. Rods: ASTM A36/A36M threaded full length at each end.

b. Angles: Fabricated from structural-steel shapes to match primary framing, of size required to withstand design loads.

c. Rigid Portal Frames: Fabricate from shop-welded, built-up steel plates or structural-steel shapes to match primary framing; of size required to withstand design loads.

d. Diaphragm Action of Metal Panels: Design metal building to resist wind forces through diaphragm action of metal panels.

e. Bracing: Provide wind bracing using any method specified above, at manufacturer's option.

2.4 PANEL MATERIALS

2.4.1 Steel Sheet

Roll-form steel roof, wall and liner panels to the specified profile, with fy = 22, 20 or 18 gauge. Height of standing seam: 2 inches minimum. Material must be plumb and true, and within the tolerances listed:

a. Galvanized Steel Sheet conforming to ASTM A653/A653M and AISI SG03-3.

b. Aluminum-Zinc Alloy-coated Steel Sheet conforming to ASTM A792/A792M and AISI SG03-3.

c. Individual panels to have continuous length to cover the entire length of any unbroken roof slope or wall area with no joints or seams and formed without warping, waviness, or ripples that are not part of the panel profile and free of damage to the finish coating system.

d. Provide panels with thermal expansion and contraction consistent with the type of system specified.

2.4.2 Insulated Panel Construction

Insulated panels are not used in this building.

2.4.3 Finish

All panels are to receive a factory-applied Kynar 500/Hylar 5000 finish consisting of a baked-on top-coat with a manufacturer's recommended prime coat conforming to the following:

a. Metal Preparation: All metal is to have the surfaces carefully prepared for painting on a continuous process coil coating line by

alkali cleaning, hot water rinsing, application of chemical conversion coating, cold water rinsing, sealing with acid rinse, and thorough drying.

b. Prime Coating: A base coat of epoxy paint, specifically formulated to interact with the top-coat, is to be applied to the prepared surfaces by roll coating to a dry film thickness of 0.20 plus 0.05 mils. This prime coat must be oven cured prior to application of finish coat.

c. Exterior Finish Coating: Apply the finish coating over the primer by roll coating to dry film thickness of 0.80 plus 5 mils (3.80 plus 0.50 mils for Vinyl Plastisol) for a total dry film thickness of 1.00 plus 0.10 mils (4.00 plus 0.10 mils for Vinyl Plastisol). This finish coat must be oven-cured.

d. Interior Finish Coating: Apply a wash-coat on the reverse side over the primer by roll coating to a dry film thickness of 0.30 plus 0.05 mils for a total dry film thickness of 0.50 plus 0.10 mils. The wash-coat must be oven-cured.

e. Color: The exterior color of the metal wall and roof panels to match color of building P1396 (adjacent to the site) chosen from the manufacturer's color charts and chips and approved by the ROICC.

f. Physical Properties: Coating must conform to the industry and manufacturer's standard performance criteria as listed by the following certified test reports:

Chalking: ASTM DEFONLINE
Color Change and Conformity: ASTM D2244
Weatherometer: ASTM G152, ASTM G153 and ASTM D822
Humidity: ASTM D2247 and ASTM D714
Salt Spray: ASTM B117
Chemical Pollution: ASTM D1308
Gloss at 60 degrees: ASTM D523
Pencil Hardness: ASTM D3363
Reverse Impact: ASTM D2794
Flexibility: ASTM D522/D522M
Abrasion: ASTM D968
Flame Spread: ASTM E84

2.4.4 Repair Of Finish Protection

Repair paint for color finish enameled metal panel must be compatible paint of the same formula and color as the specified finish furnished by the metal panel manufacturer, conforming to ASTM A780/A780M.

2.5 TRANSLUCENT WALL PANELS

Refer to specification section 08 45 23.00 22 INSULATED TRANSLUCENT FIBERGLASS SANDWICH PANEL SYSTEM for requirements for the translucent wall panels.

2.6 MISCELLANEOUS METAL FRAMING

2.6.1 General

Cold-formed metallic-coated steel sheet conforming to ASTM A653/A653M and specified in Section 05 40 00 COLD-FORMED METAL FRAMING unless otherwise

indicated.

2.6.2 Fasteners for Miscellaneous Metal Framing

Refer to the following paragraph "FASTENERS".

2.7 FASTENERS

2.7.1 General

Type, material, corrosion resistance, size and sufficient length to penetrate the supporting member a minimum of 1 inch with other properties required to fasten miscellaneous metal framing members to substrates in accordance with the metal panel manufacturer's and ASCE 7 requirements.

2.7.2 Exposed Fasteners

Fasteners for metal panels to be corrosion resistant coated steel, aluminum, stainless steel, or nylon capped steel compatible with the sheet panel or flashing and of a type and size recommended by the manufacturer to meet the performance requirements and design loads. Fasteners for accessories to be the manufacturer's standard. Provide an integral metal washer matching the color of attached material with compressible sealing EPDM gasket approximately 3/32 inch thick.

2.7.3 Screws

Screws to be corrosion resistant coated steel, aluminum and/or stainless steel being the type and size recommended by the manufacturer to meet the performance requirements.

2.7.4 Rivets

Rivets to be closed-end type, corrosion resistant coated steel, aluminum or stainless steel where watertight connections are required.

2.7.5 Attachment Clips

Fabricate clips from steel hot-dipped galvanized in accordance with ASTM A653/A653M or Series 300 stainless steel. Size, shape, thickness and capacity as required meeting the insulation thickness and design load criteria specified.

2.8 FRAMES AND MATERIALS FOR OPENINGS

2.8.1 Doors

Fire-Rated and Non-Fire-Rated Door Assemblies conforming with NFPA 80 and based on testing according to NFPA 252 as specified in Division 08 - OPENINGS unless otherwise indicated.

2.8.2 Windows

Aluminum Window Assemblies conforming to AAMA/WDMA/CSA 101/I.S.2/A440 as specified in Division 08 - OPENINGS unless otherwise indicated.

2.9 ACCESSORIES

2.9.1 General

All accessories to be compatible with the metal panels; sheet metal flashing, trim, metal closure strips, caps and similar metal accessories must not be less than the minimum thickness specified for the metal panels. Exposed metal accessories/finishes to match the panels furnished, except as otherwise indicated. Molded foam rib, ridge and other closure strips to be non-absorbent closed-cell or solid-cell synthetic rubber or pre-molded neoprene to match configuration of the panels.

2.9.2 Roof and Wall Accessories and Specialties

Steel roof curbs, equipment supports, roof hatches, dropout-type heat and smoke vents, hatch-type heat and smoke vents, gravity and roof ridge ventilators, wall louvers and other miscellaneous roof and wall equipment or penetrations conforming to AAMA, ASTM, and UL as specified in Division 07 unless otherwise indicated.

2.9.3 Roof Insulation System

Provide a thermal roof insulation system designed specifically for pre-engineered metal buildings. The system shall be installed prior to the installation of the roofing panels and include an integral white vapor barrier that, when fastened to the roof purlins using system steel straps, affords fall protection to the workers. System shall also include foam thermal blocks to separate the top of the metal purlins from the underside of the metal roofing.

System shall meet the following criteria:

a. Thermal value: R-30 minimum

b. Thickness of insulation blankets

1. lower layer to match purlin depth
2. upper layer above purlins: 3.5" min

3. Insulation material: formaldehyde-free glass fiber batts complying with ASTM C991 Type 1; ASTM E136 and ASTM E84; unfaced.

4. Thermal Blocks: provide foam blocks at top flange of purlins to act as a thermal block between the metal roofing panels and the roof structure; blocks shall be 1 inch thick above top flange of purlin. Locate foam blocks as directed by PEMB insulation system manufacturer.

5. Vapor Barrier Liner Fabric

1. Material: woven, reinforced, high-density polyethylene complying with ASTM C1136
2. Perm rating: 0.02 as per ASTM E96/E96M
3. Flame/Smoke: 25/50 in accordance with ASTM E84
4. Fabric Seams: factory performed triple extrusion welded.
5. Color of Liner: White

6. Fasteners

1. For light gage steel: 12 by 3/4 inch plated Tek 2 type screws with

sealing washer, painted to match specified color.
2. For heavy gage steel: #12 by 1-1/2 inch plated Tek 4 type screws with sealing washer, painted to match specified color.
3. All fasteners and accessories required for a complete installation shall be provided by the insulation system manufacturer.

2.9.4 Rubber Closure Strips

Closed-cell, expanded cellular rubber conforming to ASTM D1056 and ASTM D1667; extruded or molded to the configuration of the specified metal panel and in lengths supplied by the metal panel manufacturer.

2.9.5 Metal Closure Strips

Factory fabricated steel closure strips to be the same gauge , color, finish and profile of the specified roof or wall panel.

2.9.6 2.6.6 Joint Sealants

2.9.6.1 Sealants

Sealants are to be an approved gun type for use in hand or air-pressure caulking guns at temperatures above 40 degrees F(or frost-free application at temperatures above 10 degrees F with minimum solid content of 85 percent of the total volume. Sealant is to dry with a tough, durable surface skin which permits it to remain soft and pliable underneath, providing a weather-tight joint. No migratory staining is permitted on painted or unpainted metal, stone, glass, vinyl, or wood.

Prime all joints to receive sealants with a compatible one-component or two-component primer as recommended by the metal panel manufacturer.

2.9.6.2 Shop-Applied

Sealant for shop-applied caulking must be an approved gun grade, non-sag one component polysulfide or silicone conforming to ASTM C920, Type II, and with a curing time to ensure the sealant's plasticity at the time of field erection.

2.9.6.3 Field-Applied

Sealant for field-applied caulking must be an approved gun grade, non-sag one component polysulfide or two-component polyurethane with an initial maximum Shore A durometer hardness of 25, and conforming to ASTM C920, Type II. Color to match panel colors.

2.9.6.4 Tape Sealant

Pressure sensitive, 100 percent solid with a release paper backing; permanently elastic, non-sagging, non-toxic and non-staining as approved by the metal panel manufacturer.

2.10 SHEET METAL FLASHING AND TRIM

2.10.1 Fabrication

Shop fabricate sheet metal flashing and trim where practicable to comply with recommendations in SMACNA 1793 that apply to design, dimensions, metal, and other characteristics of item indicated. Obtain field

measurements for accurate fit before shop fabrication.

Fabricate sheet metal flashing and trim without excessive oil canning, buckling, and tool marks and true to line and levels indicated, with exposed edges folded back to form hems.

2.11 FINISHES

2.11.1 General

Comply with NAAMM AMP 500 for recommendations for applying and designating finishes.

2.11.2 Appearance of Finished Work

Variations in appearance of abutting or adjacent pieces are acceptable if they are within one-half of the range of approved Samples. Noticeable variations in the same piece are not acceptable. Variations in appearance of other components are acceptable if they are within the range of approved Samples and are assembled or installed to minimize contrast.

PART 3 EXECUTION

3.1 EXAMINATION

Before erection proceeds examine with the erector present the concrete foundation dimensions, concrete and/or masonry bearing surfaces, anchor bolt size and placement, survey slab elevation, locations of bearing plates, and other embedment's to receive structural framing with the metal building manufacturer's templates and drawings before erecting any steel components for compliance with requirements for installation tolerances and other conditions affecting performance of the Work.

Examine primary and secondary framing to verify that rafters, purlins, angles, channels, and other structural and metal panel support members and anchorages have been installed within alignment tolerances required by metal building manufacturer, UL, ASTM, ASCE 7 and as required by the building code for the geographical area where construction will take place.

Examine roughing-in for components and systems penetrating metal roof or wall panels to verify actual locations of penetrations relative to seam locations of metal panels before metal roof or wall panel installation.

Submit to the Contracting Officer a written report, endorsed by Erector, listing conditions detrimental to performance of the Work.

Proceed with erection only after unsatisfactory conditions have been corrected.

3.2 PREPARATION

Provide temporary shoring, guys, braces, and other supports during erection to keep the structural framing secure, plumb, and in alignment against temporary construction loading or loads equal in intensity of the building design loads. Remove temporary support systems when permanent structural framing, connections, and bracing are in place, unless otherwise indicated.

Clean substrates of substances harmful to insulation, including removing projections capable of interfering with insulation attachment and

performance.

Miscellaneous Framing: Install sub-purlins, girts, angles, furring, and other miscellaneous support members or anchorage for the metal roof or wall panels, doors, windows, roof curbs, ventilators and louvers according to metal building manufacturer's written instructions.

3.3 ERECTION OF STRUCTURAL FRAMING

Erect metal building system according to manufacturer's written erection instructions, approved shop drawings and other erection documents in accordance with MBMA MBSM - "Metal Building Systems Manual".

Do not field cut, drill, or alter structural members without written approval from metal building system manufacturer's professional engineer and the Contracting Officer.

Set structural framing accurately in locations and to elevations indicated and according to AISC 325 specifications. Maintain structural stability of frame during erection.

Clean and roughen concrete and masonry bearing surfaces prior to setting plates. Clean bottom surface of plates.

Align and adjust structural framing before permanent bolt-up and connections. Perform necessary adjustments and alignment to compensate for changes or discrepancies in elevations.

Maintain erection tolerances of structural framing in accordance with AISC 360.

3.4 METAL WALL PANEL INSTALLATION

Provide metal wall panels of full length from sill to eave as indicated, unless otherwise indicated or restricted by shipping limitations. Anchor metal wall panels and other components of the Work securely in place, in accordance with MBMA MBSM.

Erect wall panel system in accordance with the approved erection drawings, the printed instructions and safety precautions of the metal building manufacturer.

Sheets are not to be subjected to overloading, abuse, or undue impact. Do not install bent, chipped, or defective sheets.

Sheets must be erected true and plumb and in exact alignment with the horizontal and vertical edges of the building, securely anchored, and with the indicated eave, and sill.

Work is to allow for thermal movement of the wall panel, movement of the building structure, and to provide permanent freedom from noise due to wind pressure.

Field cutting metal wall panels by torch is not permitted.

3.5 ROOF PANEL INSTALLATION

Provide metal roof panels of full length from eave to ridge or eave to wall as indicated, unless otherwise indicated or restricted by shipping

limitations. Anchor metal roof panels and other components of the Work securely in place in accordance with NRCA RoofMan and MBMA MBSM.

Erect roofing system in accordance with the approved erection drawings, the printed instructions and safety precautions of the metal building manufacturer.

Sheets are not to be subjected to overloading, abuse, or undue impact. Do not install bent, chipped, or defective sheets.

Sheets must be erected true and plumb and in exact alignment with the horizontal and vertical edges of the building, securely anchored, and with the indicated rake and eave overhang.

Work must allow for thermal movement of the roofing, movement of the building structure, and provide permanent freedom from noise due to wind pressure.

Field cutting metal roof panels by torch is not permitted.

Roofing sheets must be laid with corrugations in the direction of the roof slope. End laps of exterior roofing must not be less than 8 inches; the side laps of standard exterior corrugated sheets must not be not less than 2-1/2 corrugations.

Do not permit storage, walking, wheeling, and trucking directly on applied roofing materials. Provide temporary walkways, runways, and platforms of smooth clean boards or planks as necessary to avoid damage to the installed roofing materials, and to distribute weight to conform to the indicated live load limits of roof construction.

Also refer to Section 07 61 14.00 20 STEEL STANDING SEAM ROOFING for applicable roofing information.

3.6 METAL PANEL FASTENER INSTALLATION

Anchor metal panels and other components of the Work securely in place, using manufacturer's approved fasteners according to manufacturers' written instructions.

3.7 FLASHING, TRIM AND CLOSURE INSTALLATION

a. Comply with performance requirements, manufacturer's written installation instructions, and SMACNA 1793. Provide concealed fasteners where possible, and set units true to line and level as indicated. Install work with laps, joints, and seams that will be permanently watertight and weather resistant.

b. Sheet metalwork is to be accomplished to form weather-tight construction without waves, warps, buckles, fastening stresses or distortion, and allow for expansion and contraction. Cutting, fitting, drilling, and other operations in connection with sheet metal required to accommodate the work of other trades is to be performed by sheet metal mechanics.

3.8 DOOR AND FRAME INSTALLATION

Install doors and frames plumb, rigid, properly aligned, and securely fastened in place according to manufacturer's written instructions.

Coordinate installation with metal panel flashings and other components. Caulk and seal perimeter of each door frame with elastomeric sealant compatible with metal panels. Comply with installation requirements in Division 08 - OPENINGS.

3.9 WINDOW INSTALLATION

Install "non-opening" windows plumb, rigid, properly aligned, without warp or rack of frames or sash, and securely fastened in place according to manufacturer's written instructions. Coordinate installation with metal panel flashings and other components. Use acoustical caulk and seal at both sides of the perimeter of each window frame. Use sealant compatible with metal panels. Comply with installation requirements in Division 08 - OPENINGS. All perimneter windows shall be tested along multiple points to insure that either Sound Group 3 or 4 is met.

3.10 ACCESSORY INSTALLATION

3.10.1 General

Install accessories with positive anchorage to building and weather-tight mounting, and provide for thermal expansion. Coordinate installation with flashings and other components.

3.10.2 Dissimilar Metals

Where dissimilar metals contact one another or corrosive substrates are present, protect against galvanic action by painting dissimilar metal surfaces with bituminous coating, by applying rubberized-asphalt underlayment to each surface, or by other permanent separation techniques as recommended by the metal building manufacturer.

3.10.3 Gutters and Downspouts

Comply with performance requirements, manufacturer's written installation instructions, and install sheet metal roof drainage items to produce complete roof drainage system according to SMACNA 1793 recommendations and as indicated. Metal gutter and downspouts shall not be less than 24 gage. Coordinate installation of roof perimeter flashing with installation of roof drainage system.

3.10.4 Insulation

Comply with performance requirements and manufacturer's written installation instructions. Install insulation concurrently with metal panel installation, in thickness indicated to cover entire roof and wall area, as specified in Division 07 - THERMAL AND MOISTURE PROTECTION.

3.10.5 Roof and Wall Accessories and Specialties

Install roof and wall accessories and specialties complete with necessary hardware, anchors, dampers, weather guards, rain caps, and equipment supports as specified in Division 07 - THERMAL AND MOISTURE PROTECTION, unless otherwise indicated.

3.11 CLEAN-UP AND PROTECTION

3.11.1 Structural Framing

Clean all exposed structural framing at completion of installation. Remove metal shavings, filings, bolts, and wires from work area. Remove grease and oil films, excess sealants, handling marks, contamination from steel wool, fittings and drilling debris and scrub the work clean. Exposed metal surfaces to be free of dents, creases, waves, scratch marks, solder or weld marks, and damage to the finish coating.

3.11.2 Metal Panels

Clean all exposed sheet metal work at completion of installation. Remove metal shavings, filings, nails, bolts, and wires from work area. Remove protective coverings/films, grease and oil films, excess sealants, handling marks, contamination from steel wool, fittings and drilling debris and scrub the work clean. Exposed metal surfaces to be free of dents, creases, waves, scratch marks, solder or weld marks, and damage to the finish coating.

3.11.3 Touch-Up Painting

After erection, promptly clean, prepare, and prime or re-prime field connections, rust spots, and abraded surfaces of prime-painted structural framing and accessories. Clean and touch-up paint with manufacturer's touch-up paint.

3.12 WASTE MANAGEMENT

Separate waste in accordance with the Waste Management Plan, placing copper materials, ferrous materials, and galvanized sheet metal in designated areas for reuse. Close and seal tightly all partly used adhesives and solvents; store protected in a well-ventilated, fire-safe area at moderate temperature.

Collect and place scrap/waste debris in containers. Promptly dispose of scrap/waste debris. Do not allow scrap/waste debris to accumulate on-site; transport scrap/waste debris from government property and legally dispose of them.

3.13 SPECIAL INSPECTION AND TESTING FOR SEISMIC-RESISTING SYSTEMS

Special inspections and testing for seismic-resisting systems and components shall be done in accordance with Section 01 45 00.00 20 QUALITY CONTROL.

3.14 WARRANTY

3.14.1 MANUFACTURER'S WARRANTY

Submit all manufacturers' signed warranties to Contracting Officer prior to final commissioning and acceptance.

3.14.2 CONTRACTOR'S WARRANTY for INSTALLATION

Submit contractor's warranty for installation to the Contracting Officer prior to final commissioning and acceptance.

-- End of Section --

THIS PAGE HAS BEEN INTENTIONALLY LEFT BLANK

SECTION 22 00 00

PLUMBING, GENERAL PURPOSE
11/11

PART 1 GENERAL

1.1 REFERENCES

The publications listed below form a part of this specification to the extent referenced. The publications are referred to within the text by the basic designation only.

AIR-CONDITIONING, HEATING AND REFRIGERATION INSTITUTE (AHRI)

AHRI 1010	(2002) Self-Contained, Mechanically Refrigerated Drinking-Water Coolers

AMERICAN NATIONAL STANDARDS INSTITUTE (ANSI)

ANSI Z21.10.3/CSA 4.3	(2013) Gas Water Heaters Vol.III, Storage Water Heaters With Input Ratings Above 75,000 Btu Per Hour, Circulating and Instantaneous
ANSI Z21.22/CSA 4.4	(1999; Addenda A 2000, Addenda B 2001; R 2004) Relief Valves for Hot Water Supply Systems

AMERICAN SOCIETY OF HEATING, REFRIGERATING AND AIR-CONDITIONING ENGINEERS (ASHRAE)

ASHRAE 90.1 - IP	(2010; Errata 1-4 2011; INT 1-12 2011; Addenda A, B, C, G, H, J, K, O, P, S, Y, Z, BZ, CG, CI and DS 2012; Errata 5-9 2012; INT 13-16 2012; Errata 10-12 2013; INT 17-18 2013) Energy Standard for Buildings Except Low-Rise Residential Buildings

AMERICAN SOCIETY OF SANITARY ENGINEERING (ASSE)

ASSE 1001	(2008) Performance Requirements for Atmospheric Type Vacuum Breakers (ANSI approved 2009)
ASSE 1003	(2009) Performance Requirements for Water Pressure Reducing Valves for Domestic Water Distribution Systems - (ANSI approved 2010)
ASSE 1010	(2004) Performance Requirements for Water Hammer Arresters (ANSI approved 2004)
ASSE 1011	(2004; Errata 2004) Performance Requirements for Hose Connection Vacuum Breakers (ANSI approved 2004)

ASSE 1012	(2009) Performance Requirements for Backflow Preventer with an Intermediate Atmospheric Vent - (ANSI approved 2009)
ASSE 1013	(2011) Performance Requirements for Reduced Pressure Principle Backflow Preventers and Reduced Pressure Fire Protection Principle Backflow Preventers - (ANSI approved 2010)
ASSE 1018	(2001) Performance Requirements for Trap Seal Primer Valves - Potable Water Supplied (ANSI Approved 2002
ASSE 1019	(2011) Performance Requirements for Vacuum Breaker Wall Hydrants, Freeze Resistant, Automatic Draining Type (ANSI Approved 2004)
ASSE 1020	(2004; Errata 2004; Errata 2004) Performance Requirements for Pressure Vacuum Breaker Assembly (ANSI Approved 2004)
ASSE 1037	(1990) Performance Requirements for Pressurized Flushing Devices (Flushometers) for Plumbing Fixtures

AMERICAN WATER WORKS ASSOCIATION (AWWA)

AWWA 10084	(2005) Standard Methods for the Examination of Water and Wastewater
AWWA B300	(2010; Addenda 2011) Hypochlorites
AWWA B301	(2010) Liquid Chlorine
AWWA C203	(2008) Coal-Tar Protective Coatings and Linings for Steel Water Pipelines - Enamel and Tape - Hot-Applied
AWWA C606	(2011) Grooved and Shouldered Joints
AWWA C651	(2005; Errata 2005) Standard for Disinfecting Water Mains
AWWA C652	(2011) Disinfection of Water-Storage Facilities
AWWA C700	(2009) Standard for Cold Water Meters - Displacement Type, Bronze Main Case
AWWA C701	(2012) Standard for Cold-Water Meters - Turbine Type for Customer Service

AMERICAN WELDING SOCIETY (AWS)

AWS A5.8/A5.8M	(2011; Amendment 2012) Specification for Filler Metals for Brazing and Braze Welding

AWS B2.2/B2.2M	(2010) Specification for Brazing Procedure and Performance Qualification

ASME INTERNATIONAL (ASME)

ASME A112.1.2	(2012) Standard for Air Gaps in Plumbing Systems (For Plumbing Fixtures and Water-Connected Receptors)
ASME A112.14.1	(2003; R 2012) Backwater Valves
ASME A112.19.2/CSA B45.1	(2013) Standard for Vitreous China Plumbing Fixtures and Hydraulic Requirements for Water Closets and Urinals
ASME A112.19.3/CSA B45.4	(2008; R 2013) Stainless Steel Plumbing Fixtures
ASME A112.36.2M	(1991; R 2012) Cleanouts
ASME A112.6.1M	(1997; R 2012) Floor Affixed Supports for Off-the-Floor Plumbing Fixtures for Public Use
ASME A112.6.3	(2001; R 2007) Standard for Floor and Trench Drains
ASME B1.20.1	(2013) Pipe Threads, General Purpose (Inch)
ASME B16.12	(2009) Cast Iron Threaded Drainage Fittings
ASME B16.15	(2013) Cast Copper Alloy Threaded Fittings Classes 125 and 250
ASME B16.18	(2012) Cast Copper Alloy Solder Joint Pressure Fittings
ASME B16.21	(2011) Nonmetallic Flat Gaskets for Pipe Flanges
ASME B16.22	(2013) Standard for Wrought Copper and Copper Alloy Solder Joint Pressure Fittings
ASME B16.23	(2011) Cast Copper Alloy Solder Joint Drainage Fittings - DWV
ASME B16.24	(2011) Cast Copper Alloy Pipe Flanges and Flanged Fittings: Classes 150, 300, 600, 900, 1500, and 2500
ASME B16.29	(2012) Wrought Copper and Wrought Copper Alloy Solder Joint Drainage Fittings - DWV
ASME B16.3	(2011) Malleable Iron Threaded Fittings, Classes 150 and 300
ASME B16.34	(2013) Valves - Flanged, Threaded and Welding End

ASME B16.4	(2011) Standard for Gray Iron Threaded Fittings; Classes 125 and 250
ASME B16.5	(2013) Pipe Flanges and Flanged Fittings: NPS 1/2 Through NPS 24 Metric/Inch Standard
ASME B16.50	(2013) Wrought Copper and Copper Alloy Braze-Joint Pressure Fittings
ASME B31.5	(2013) Refrigeration Piping and Heat Transfer Components
ASME B40.100	(2013) Pressure Gauges and Gauge Attachments
ASME BPVC SEC IV	(2010) BPVC Section IV-Rules for Construction of Heating Boilers
ASME CSD-1	(2012) Control and Safety Devices for Automatically Fired Boilers

ASTM INTERNATIONAL (ASTM)

ASTM A105/A105M	(2013) Standard Specification for Carbon Steel Forgings for Piping Applications
ASTM A193/A193M	(2012a) Standard Specification for Alloy-Steel and Stainless Steel Bolting Materials for High-Temperature Service and Other Special Purpose Applications
ASTM A515/A515M	(2010) Standard Specification for Pressure Vessel Plates, Carbon Steel, for Intermediate- and Higher-Temperature Service
ASTM A516/A516M	(2010) Standard Specification for Pressure Vessel Plates, Carbon Steel, for Moderate- and Lower-Temperature Service
ASTM A518/A518M	(1999; R 2012) Standard Specification for Corrosion-Resistant High-Silicon Iron Castings
ASTM A74	(2013a) Standard Specification for Cast Iron Soil Pipe and Fittings
ASTM A888	(2013a) Standard Specification for Hubless Cast Iron Soil Pipe and Fittings for Sanitary and Storm Drain, Waste, and Vent Piping Applications
ASTM B117	(2011) Standard Practice for Operating Salt Spray (Fog) Apparatus
ASTM B306	(2013) Standard Specification for Copper Drainage Tube (DWV)

ASTM B32	(2008; R 2014) Standard Specification for Solder Metal
ASTM B370	(2012) Standard Specification for Copper Sheet and Strip for Building Construction
ASTM B42	(2010) Standard Specification for Seamless Copper Pipe, Standard Sizes
ASTM B43	(2009) Standard Specification for Seamless Red Brass Pipe, Standard Sizes
ASTM B813	(2010) Standard Specification for Liquid and Paste Fluxes for Soldering of Copper and Copper Alloy Tube
ASTM B88	(2009) Standard Specification for Seamless Copper Water Tube
ASTM B88M	(2013) Standard Specification for Seamless Copper Water Tube (Metric)
ASTM C564	(2012) Standard Specification for Rubber Gaskets for Cast Iron Soil Pipe and Fittings
ASTM C920	(2014a) Standard Specification for Elastomeric Joint Sealants
ASTM D2564	(2012) Standard Specification for Solvent Cements for Poly(Vinyl Chloride) (PVC) Plastic Piping Systems
ASTM D2665	(2012) Standard Specification for Poly(Vinyl Chloride) (PVC) Plastic Drain, Waste, and Vent Pipe and Fittings
ASTM D2822/D2822M	(2005; E 2011; R 2011) Asphalt Roof Cement
ASTM D2855	(1996; R 2010) Standard Practice for Making Solvent-Cemented Joints with Poly(Vinyl Chloride) (PVC) Pipe and Fittings
ASTM D3139	(1998; R 2011) Joints for Plastic Pressure Pipes Using Flexible Elastomeric Seals
ASTM D3212	(2007; R 2013) Standard Specification for Joints for Drain and Sewer Plastic Pipes Using Flexible Elastomeric Seals
ASTM D3311	(2011) Drain, Waste, and Vent (DWV) Plastic Fittings Patterns
ASTM E1	(2013) Standard Specification for ASTM Liquid-in-Glass Thermometers
ASTM F1760	(2001; R 2011) Coextruded Poly(Vinyl Chloride) (PVC) Non-Pressure Plastic Pipe

	Having Reprocessed-Recycled Content
ASTM F2389	(2010) Standard Specification for Pressure-rated Polypropylene (PP) Piping Systems
ASTM F477	(2010) Standard Specification for Elastomeric Seals (Gaskets) for Joining Plastic Pipe
ASTM F493	(2010) Solvent Cements for Chlorinated Poly (Vinyl Chloride) (CPVC) Plastic Pipe and Fittings
ASTM F891	(2010) Coextruded Poly (Vinyl Chloride) (PVC) Plastic Pipe with a Cellular Core

CAST IRON SOIL PIPE INSTITUTE (CISPI)

CISPI 301	(2009) Hubless Cast Iron Soil Pipe and Fittings for Sanitary and Storm Drain, Waste, and Vent Piping Applications
CISPI 310	(2011) Coupling for Use in Connection with Hubless Cast Iron Soil Pipe and Fittings for Sanitary and Storm Drain, Waste, and Vent Piping Applications

COPPER DEVELOPMENT ASSOCIATION (CDA)

CDA A4015	(2010) Copper Tube Handbook

INTERNATIONAL CODE COUNCIL (ICC)

ICC A117.1	(2009) Accessible and Usable Buildings and Facilities
ICC IPC	(2012) International Plumbing Code

MANUFACTURERS STANDARDIZATION SOCIETY OF THE VALVE AND FITTINGS INDUSTRY (MSS)

MSS SP-110	(2010) Ball Valves Threaded, Socket-Welding, Solder Joint, Grooved and Flared Ends
MSS SP-25	(2013) Standard Marking System for Valves, Fittings, Flanges and Unions
MSS SP-58	(2009) Pipe Hangers and Supports - Materials, Design and Manufacture, Selection, Application, and Installation
MSS SP-67	(2011) Butterfly Valves
MSS SP-69	(2003; Notice 2012) Pipe Hangers and Supports - Selection and Application (ANSI Approved American National Standard)

MSS SP-70	(2011) Gray Iron Gate Valves, Flanged and Threaded Ends
MSS SP-71	(2011; Errata 2013) Gray Iron Swing Check Valves, Flanged and Threaded Ends
MSS SP-72	(2010a) Ball Valves with Flanged or Butt-Welding Ends for General Service
MSS SP-78	(2011) Cast Iron Plug Valves, Flanged and Threaded Ends
MSS SP-80	(2013) Bronze Gate, Globe, Angle and Check Valves
MSS SP-85	(2011) Gray Iron Globe & Angle Valves Flanged and Threaded Ends

NACE INTERNATIONAL (NACE)

NACE SP0169	(2013) Control of External Corrosion on Underground or Submerged Metallic Piping Systems

NATIONAL ELECTRICAL MANUFACTURERS ASSOCIATION (NEMA)

NEMA MG 1	(2011; Errata 2012) Motors and Generators
NEMA MG 11	(1977; R 2012) Energy Management Guide for Selection and Use of Single Phase Motors

NATIONAL FIRE PROTECTION ASSOCIATION (NFPA)

NFPA 90A	(2015) Standard for the Installation of Air Conditioning and Ventilating Systems

NSF INTERNATIONAL (NSF)

NSF 372	(2011) Drinking Water System Components - Lead Content
NSF/ANSI 14	(2014) Plastics Piping System Components and Related Materials
NSF/ANSI 61	(2013) Drinking Water System Components - Health Effects

PLASTIC PIPE AND FITTINGS ASSOCIATION (PPFA)

PPFA Fire Man	(2010) Firestopping: Plastic Pipe in Fire Resistive Construction

PLUMBING AND DRAINAGE INSTITUTE (PDI)

PDI WH 201	(2010) Water Hammer Arresters Standard

SOCIETY OF AUTOMOTIVE ENGINEERS INTERNATIONAL (SAE)

SAE J1508	(2009) Hose Clamp Specifications

U.S. ENVIRONMENTAL PROTECTION AGENCY (EPA)

EPA SM 9223	(2004) Enzyme Substrate Coliform Test
PL 93-523	(1974; A 1999) Safe Drinking Water Act

U.S. GREEN BUILDING COUNCIL (USGBC)

LEED NC	(2009) Leadership in Energy and Environmental Design(tm) New Construction Rating System

U.S. NATIONAL ARCHIVES AND RECORDS ADMINISTRATION (NARA)

10 CFR 430	Energy Conservation Program for Consumer Products
21 CFR 175	Indirect Food Additives: Adhesives and Components of Coatings
40 CFR 141.80	National Primary Drinking Water Regulations; Control of Lead and Copper; General Requirements
PL 109-58	Energy Policy Act of 2005 (EPAct05)

UNDERWRITERS LABORATORIES (UL)

UL 174	(2004; Reprint Sep 2012) Household Electric Storage Tank Water Heaters
UL 1951	(2011) Electric Plumbing Accessories
UL 430	(2009; Reprint Oct 2013) Standard for Waste Disposers

1.2 SUBMITTALS

Government approval is required for submittals with a "G" designation; submittals not having a "G" designation are for Contractor Quality Control approval. The following shall be submitted in accordance with Section 01 33 00 SUBMITTAL PROCEDURES:

SD-02 Shop Drawings

Plumbing System; G

Detail drawings consisting of schedules, performance charts, instructions, diagrams, and other information to illustrate the requirements and operations of systems that are not covered by the Plumbing Code. Detail drawings for the complete plumbing system including piping layouts and locations of connections; dimensions for roughing-in, foundation, and support points; schematic diagrams and wiring diagrams or connection and interconnection diagrams. Detail drawings shall indicate clearances required for maintenance and operation. Where piping and equipment are to be supported other than as indicated, details shall include loadings and proposed support methods. Mechanical drawing plans,

elevations, views, and details, shall be drawn to scale.

SD-03 Product Data

Fixtures; (LEED NC)

List of installed fixtures with manufacturer, model, and flow rate.

Flush valve water closets

Wall hung lavatories

Kitchen sinks

Drinking-water coolers; G

Water heaters; G

Pumps; G

Backflow prevention assemblies; G

A copy of qualified procedures and a list of names and identification symbols of qualified welders and welding operators.

Vibration-Absorbing Features; G

Details of vibration-absorbing features, including arrangement, foundation plan, dimensions and specifications.

Plumbing System

Diagrams, instructions, and other sheets proposed for posting. Manufacturer's recommendations for the installation of bell and spigot and hubless joints for cast iron soil pipe.

SD-06 Test Reports

Tests, Flushing and Disinfection

Test reports in booklet form showing all field tests performed to adjust each component and all field tests performed to prove compliance with the specified performance criteria, completion and testing of the installed system. Each test report shall indicate the final position of controls.

Test of Backflow Prevention Assemblies; G.

Certification of proper operation shall be as accomplished in accordance with state regulations by an individual certified by the state to perform such tests. If no state requirement exists, the Contractor shall have the manufacturer's representative test the device, to ensure the unit is properly installed and performing as intended. The Contractor shall provide written documentation of the tests performed and signed by the individual performing the tests.

SD-07 Certificates

Materials and Equipment

Where equipment is specified to conform to requirements of the ASME Boiler and Pressure Vessel Code, the design, fabrication, and installation shall conform to the code.

Bolts

Written certification by the bolt manufacturer that the bolts furnished comply with the specified requirements.

SD-10 Operation and Maintenance Data

Plumbing System; G.

Submit in accordance with Section 01 78 23 OPERATION AND MAINTENANCE DATA and 01 78 24.00 20 FACILITY ELECTRONIC OPERATION AND MAINTENANCE SUPPORT INFORMATION.

1.3 STANDARD PRODUCTS

Specified materials and equipment shall be standard products of a manufacturer regularly engaged in the manufacture of such products. Specified equipment shall essentially duplicate equipment that has performed satisfactorily at least two years prior to bid opening. Standard products shall have been in satisfactory commercial or industrial use for 2 years prior to bid opening. The 2-year use shall include applications of equipment and materials under similar circumstances and of similar size. The product shall have been for sale on the commercial market through advertisements, manufacturers' catalogs, or brochures during the 2 year period.

1.3.1 Alternative Qualifications

Products having less than a two-year field service record will be acceptable if a certified record of satisfactory field operation for not less than 6000 hours, exclusive of the manufacturer's factory or laboratory tests, can be shown.

1.3.2 Service Support

The equipment items shall be supported by service organizations. Submit a certified list of qualified permanent service organizations for support of the equipment which includes their addresses and qualifications. These service organizations shall be reasonably convenient to the equipment installation and able to render satisfactory service to the equipment on a regular and emergency basis during the warranty period of the contract.

1.3.3 Manufacturer's Nameplate

Each item of equipment shall have a nameplate bearing the manufacturer's name, address, model number, and serial number securely affixed in a conspicuous place; the nameplate of the distributing agent will not be acceptable.

1.3.4 Modification of References

In each of the publications referred to herein, consider the advisory

provisions to be mandatory, as though the word, "shall" had been substituted for "should" wherever it appears. Interpret references in these publications to the "authority having jurisdiction", or words of similar meaning, to mean the Contracting Officer.

1.3.4.1 Definitions

For the International Code Council (ICC) Codes referenced in the contract documents, advisory provisions shall be considered mandatory, the word "should" shall be interpreted as "shall." Reference to the "code official" shall be interpreted to mean the "Contracting Officer." For Navy owned property, references to the "owner" shall be interpreted to mean the "Contracting Officer." For leased facilities, references to the "owner" shall be interpreted to mean the "lessor." References to the "permit holder" shall be interpreted to mean the "Contractor."

1.3.4.2 Administrative Interpretations

For ICC Codes referenced in the contract documents, the provisions of Chapter 1, "Administrator," do not apply. These administrative requirements are covered by the applicable Federal Acquisition Regulations (FAR) included in this contract and by the authority granted to the Officer in Charge of Construction to administer the construction of this project. References in the ICC Codes to sections of Chapter 1, shall be applied appropriately by the Contracting Officer as authorized by his administrative cognizance and the FAR.

1.4 DELIVERY, STORAGE, AND HANDLING

Handle, store, and protect equipment and materials to prevent damage before and during installation in accordance with the manufacturer's recommendations, and as approved by the Contracting Officer. Replace damaged or defective items.

1.5 REGULATORY REQUIREMENTS

Unless otherwise required herein, plumbing work shall be in accordance with ICC IPC. Energy consuming products and systems shall be in accordance with PL 109-58 and ASHRAE 90.1 - IP

1.6 PROJECT/SITE CONDITIONS

The Contractor shall become familiar with details of the work, verify dimensions in the field, and advise the Contracting Officer of any discrepancy before performing any work.

1.7 INSTRUCTION TO GOVERNMENT PERSONNEL

When specified in other sections, furnish the services of competent instructors to give full instruction to the designated Government personnel in the adjustment, operation, and maintenance, including pertinent safety requirements, of the specified equipment or system. Instructors shall be thoroughly familiar with all parts of the installation and shall be trained in operating theory as well as practical operation and maintenance work.

Instruction shall be given during the first regular work week after the equipment or system has been accepted and turned over to the Government for regular operation. The number of man-days (8 hours per day) of instruction furnished shall be as specified in the individual section. When more than

4 man-days of instruction are specified, use approximately half of the time for classroom instruction. Use other time for instruction with the equipment or system.

When significant changes or modifications in the equipment or system are made under the terms of the contract, provide additional instruction to acquaint the operating personnel with the changes or modifications.

1.8 ACCESSIBILITY OF EQUIPMENT

Install all work so that parts requiring periodic inspection, operation, maintenance, and repair are readily accessible. Install concealed valves, expansion joints, controls, dampers, and equipment requiring access, in locations freely accessible through access doors.

PART 2 PRODUCTS

2.1 Materials

Materials for various services shall be in accordance with TABLES I and II. PVC pipe shall contain a minimum of 25 percent recycled content in accordance with ASTM F1760. Steel pipe shall contain a minimum of 25 percent recycled content, with a minimum of 16 percent post-consumer recycled content. Pipe schedules shall be selected based on service requirements. Pipe fittings shall be compatible with the applicable pipe materials. Plastic pipe, fittings, and solvent cement shall meet NSF/ANSI 14 and shall be NSF listed for the service intended. Plastic pipe shall not be used for potable hot and cold water service. Polypropylene pipe and fittings shall conform to dimensional requirements of Schedule 40, Iron Pipe size and shall comply with NSF/ANSI 14, NSF/ANSI 61 and ASTM F2389. Polypropylene piping that will be exposed to UV light shall be provided with a Factory applied UV resistant coating. Pipe threads (except dry seal) shall conform to ASME B1.20.1. Grooved pipe couplings and fittings shall be from the same manufacturer. Material or equipment containing a weighted average of greater than 0.25 percent lead shall not be used in any potable water system intended for human consumption, and shall be certified in accordance with NSF/ANSI 61, Annex G or NSF 372. In line devices such as water meters, building valves, check valves, meter stops, valves, fittings and back flow preventers shall comply with PL 93-523 and NSF/ANSI 61, Section 8. End point devices such as drinking water fountains, lavatory faucets, kitchen and bar faucets, residential ice makers, supply stops and end point control valves used to dispense water for drinking must meet the requirements of NSF/ANSI 61, Section 9. Hubless cast-iron soil pipe shall not be installed underground, under concrete floor slabs, or in crawl spaces below kitchen floors. Cast-iron pipe shall contain a minimum of 25 percent recycled content. Plastic pipe shall not be installed in air plenums. Plastic pipe shall not be installed in a pressure piping system. Perforated PVC pipe, ASTM D2729, shall be installed for foundation drainage.

2.1.1 Pipe Joint Materials

Hubless cast-iron soil pipe shall not be used under ground. Solder containing lead shall not be used with copper pipe. Cast iron soil pipe and fittings shall be marked with the collective trademark of the Cast Iron Soil Institute. Joints and gasket materials shall conform to the following:

a. Coupling for Cast-Iron Pipe: for hub and spigot type ASTM A74, AWWA C606. For hubless type: CISPI 310

b. Flange Gaskets: Gaskets shall be made of non-asbestos material in accordance with ASME B16.21. Gaskets shall be flat, 1/16 inch thick, and contain Aramid fibers bonded with Styrene Butadiene Rubber (SBR) or Nitro Butadiene Rubber (NBR). Gaskets shall be the full face or self centering flat ring type. Gaskets used for hydrocarbon service shall be bonded with NBR.

c. Brazing Material: Brazing material shall conform to AWS A5.8/A5.8M, BCuP-5.

d. Brazing Flux: Flux shall be in paste or liquid form appropriate for use with brazing material. Flux shall be as follows: lead-free; have a 100 percent flushable residue; contain slightly acidic reagents; contain potassium borides; and contain fluorides.

e. Solder Material: Solder metal shall conform to ASTM B32.

f. Solder Flux: Flux shall be liquid form, non-corrosive, and conform to ASTM B813, Standard Test 1.

g. PTFE Tape: PTFE Tape, for use with Threaded Metal or Plastic Pipe.

h. Rubber Gaskets for Cast-Iron Soil-Pipe and Fittings (hub and spigot type and hubless type): ASTM C564.

i. Flexible Elastomeric Seals: ASTM D3139, ASTM D3212 or ASTM F477.

j. Plastic Solvent Cement for PVC Plastic Pipe: ASTM D2564 and ASTM D2855.

k. Plastic Solvent Cement for CPVC Plastic Pipe: ASTM F493.

l. Flanged fittings including flanges, bolts, nuts, bolt patterns, etc., shall be in accordance with ASME B16.5 class 150 and shall have the manufacturer's trademark affixed in accordance with MSS SP-25. Flange material shall conform to ASTM A105/A105M. Blind flange material shall conform to ASTM A516/A516M cold service and ASTM A515/A515M for hot service. Bolts shall be high strength or intermediate strength with material conforming to ASTM A193/A193M.

m. Copper tubing shall conform to ASTM B88, Type K, L or M.

2.1.2 Miscellaneous Materials

Miscellaneous materials shall conform to the following:

a. Water Hammer Arrester: PDI WH 201. Water hammer arrester shall be diaphragm or piston type.

b. Copper, Sheet and Strip for Building Construction: ASTM B370.

c. Asphalt Roof Cement: ASTM D2822/D2822M.

d. Hose Clamps: SAE J1508.

e. Supports for Off-The-Floor Plumbing Fixtures: ASME A112.6.1M.

f. Metallic Cleanouts: ASME A112.36.2M.

g. Plumbing Fixture Setting Compound: A preformed flexible ring seal molded from hydrocarbon wax material. The seal material shall be nonvolatile nonasphaltic and contain germicide and provide watertight, gastight, odorproof and verminproof properties.

h. Hypochlorites: AWWA B300.

i. Liquid Chlorine: AWWA B301.

j. Gauges - Pressure and Vacuum Indicating Dial Type - Elastic Element: ASME B40.100.

k. Thermometers: ASTM E1. Mercury shall not be used in thermometers.

2.1.3 Pipe Insulation Material

Insulation shall be as specified in Section 23 07 00 THERMAL INSULATION FOR MECHANICAL SYSTEMS.

2.2 PIPE HANGERS, INSERTS, AND SUPPORTS

Pipe hangers, inserts, and supports shall conform to MSS SP-58 and MSS SP-69.

2.3 VALVES

Valves shall be provided on supplies to equipment and fixtures. Valves 2-1/2 inches and smaller shall be bronze with threaded bodies for pipe and solder-type connections for tubing. Valves 3 inches and larger shall have flanged iron bodies and bronze trim. Pressure ratings shall be based upon the application. Grooved end valves may be provided if the manufacturer certifies that the valves meet the performance requirements of applicable MSS standard. Valves shall conform to the following standards:

Description	Standard
Butterfly Valves	MSS SP-67
Cast-Iron Gate Valves, Flanged and Threaded Ends	MSS SP-70
Cast-Iron Swing Check Valves, Flanged and Threaded Ends	MSS SP-71
Ball Valves with Flanged Butt-Welding Ends for General Service	MSS SP-72
Ball Valves Threaded, Socket-Welding, Solder Joint	MSS SP-110
Cast-Iron Plug Valves, Flanged and Threaded Ends	MSS SP-78
Bronze Gate, Globe, Angle, and Check Valves	MSS SP-80

Steel Valves, Socket Welding and Threaded Ends	ASME B16.34
Cast-Iron Globe and Angle Valves, Flanged and Threaded Ends	MSS SP-85
Backwater Valves	ASME A112.14.1
Vacuum Relief Valves	ANSI Z21.22/CSA 4.4
Water Pressure Reducing Valves	ASSE 1003
Water Heater Drain Valves	ASME BPVC SEC IV, Part HLW-810: Requirements for Potable-Water Heaters Bottom Drain Valve
Trap Seal Primer Valves	ASSE 1018
Temperature and Pressure Relief Valves for Hot Water Supply Systems	ANSI Z21.22/CSA 4.4
Temperature and Pressure Relief Valves for Automatically Fired Hot Water Boilers	ASME CSD-1 Safety Code No., Part CW, Article 5

2.3.1 Backwater Valves

Backwater valves shall be either separate from the floor drain or a combination floor drain, P-trap, and backwater valve, as shown. Valves shall have cast-iron bodies with cleanouts large enough to permit removal of interior parts. Valves shall be of the flap type, hinged or pivoted, with revolving disks. Hinge pivots, disks, and seats shall be nonferrous metal. Disks shall be slightly open in a no-flow no-backwater condition. Cleanouts shall extend to finished floor and be fitted with threaded countersunk plugs.

2.3.2 Wall Faucets

Wall faucets with vacuum-breaker backflow preventer shall be brass with 3/4 inch male inlet threads, hexagon shoulder, and 3/4 inch hose connection. Faucet handle shall be securely attached to stem.

2.3.3 Wall Hydrants (Frostproof)

ASSE 1019 with vacuum-breaker backflow preventer shall have a nickel-brass or nickel-bronze wall plate or flange with nozzle and detachable key handle. A brass or bronze operating rod shall be provided within a galvanized iron casing of sufficient length to extend through the wall so that the valve is inside the building, and the portion of the hydrant

between the outlet and valve is self-draining. A brass or bronze valve with coupling and union elbow having metal-to-metal seat shall be provided. Valve rod and seat washer shall be removable through the face of the hydrant. The hydrant shall have 3/4 inch exposed hose thread on spout and 3/4 inch male pipe thread on inlet.

2.3.4 Relief Valves

Water heaters and hot water storage tanks shall have a combination pressure and temperature (P&T) relief valve. The pressure relief element of a P&T relief valve shall have adequate capacity to prevent excessive pressure buildup in the system when the system is operating at the maximum rate of heat input. The temperature element of a P&T relief valve shall have a relieving capacity which is at least equal to the total input of the heaters when operating at their maximum capacity. Relief valves shall be rated according to ANSI Z21.22/CSA 4.4. Relief valves for systems where the maximum rate of heat input is less than 200,000 Btuh shall have 3/4 inch minimum inlets, and 3/4 inch outlets. Relief valves for systems where the maximum rate of heat input is greater than 200,000 Btuh shall have 1 inch minimum inlets, and 1 inch outlets. The discharge pipe from the relief valve shall be the size of the valve outlet.

2.3.5 Thermostatic Mixing Valves

Provide thermostatic mixing valve for lavatory faucets. Mixing valves, thermostatic type, pressure-balanced or combination thermostatic and pressure-balanced shall be line size and shall be constructed with rough or finish bodies either with or without plating. Each valve shall be constructed to control the mixing of hot and cold water and to deliver water at a desired temperature regardless of pressure or input temperature changes. The control element shall be of an approved type. The body shall be of heavy cast bronze, and interior parts shall be brass, bronze, corrosion-resisting steel or copper. The valve shall be equipped with necessary stops, check valves, unions, and sediment strainers on the inlets. Mixing valves shall maintain water temperature within 5 degrees F of any setting.

2.4 FIXTURES

Fixtures shall be water conservation type, in accordance with ICC IPC. Fixtures for use by the physically handicapped shall be in accordance with ICC A117.1. Vitreous China, nonabsorbent, hard-burned, and vitrified throughout the body shall be provided. Porcelain enameled ware shall have specially selected, clear white, acid-resisting enamel coating evenly applied on surfaces. No fixture will be accepted that shows cracks, crazes, blisters, thin spots, or other flaws. Fixtures shall be equipped with appurtenances such as traps, faucets, stop valves, and drain fittings. Each fixture and piece of equipment requiring connections to the drainage system, except grease interceptors, shall be equipped with a trap. Brass expansion or toggle bolts capped with acorn nuts shall be provided for supports, and polished chromium-plated pipe, valves, and fittings shall be provided where exposed to view. Fixtures with the supply discharge below the rim shall be equipped with backflow preventers. Internal parts of flush and/or flushometer valves, shower mixing valves, shower head face plates, pop-up stoppers of lavatory waste drains, and pop-up stoppers and overflow tees and shoes of bathtub waste drains may contain acetal resin, fluorocarbon, nylon, acrylonitrile-butadiene-styrene (ABS) or other plastic material, if the material has provided satisfactory service under actual commercial or industrial operating conditions for not

less than 2 yearsshall be copper alloy with all visible surfaces chrome plated. Plastic in contact with hot water shall be suitable for 180 degrees F water temperature.

2.4.1 Automatic Controls

Provide automatic, sensor operated faucets and flush valves to comply with ASSE 1037 and UL 1951 for lavatory faucets, urinals, and water closets. Flushing and faucet systems shall consist of solenoid-activated valves with light beam sensors. Flush valve for water closet shall include an override pushbutton. Flushing devices shall be provided as described in paragraph FIXTURES AND FIXTURE TRIMMINGS. Automatic controls shall be electronic and shall be hard wired. For sensor operated valves, provide 120/24 volt wiring box, transformers, and solenoids. Transformers may be grouped to serve multiple valves.

2.4.2 Flush Valve Water Closets

ASME A112.19.2/CSA B45.1, white vitreous china, siphon jet, elongated bowl, floor-mounted, floor outlet. Top of toilet seat height above floor shall be 14 to 15 inches, except 17 to 19 inches for wheelchair water closets. Provide wax bowl ring including plastic sleeve. Provide white solid plastic elongated open-front seat .

Water flushing volume of the water closet and flush valve combination shall not exceed 1.6/1.1 gallons per flush for dual-flush valves. Provide a dual-flush water closet and flush valve combination that will also provide a second flushing water volume not to exceed 1.1 gallons per flush.

Provide large diameter flush valve including angle control-stop valve, vacuum breaker, tail pieces, slip nuts, and wall plates; exposed to view components shall be chromium-plated or polished stainless steel. Flush valves shall be nonhold-open type. Mount flush valves not less than 11 inches above the fixture. Mounted height of flush valve shall not interfere with the hand rail in ADA stalls. Provide solenoid-activated flush valves including electrical-operated light-beam-sensor to energize the solenoid.

2.4.3 Wall Hung Lavatories

ASME A112.19.2/CSA B45.1, white vitreous china, ,straight back type, minimum dimensions of 23 inches, wide by 20 inches front to rear, with supply openings for use with top mounted centerset faucets, and openings for concealed arm carrier installation. Provide aerator with faucet. Water flow rate shall not exceed 0.5 gpm when measured at a flowing water pressure of 60 psi. Provide ASME A112.6.1M concealed chair carriers with vertical steel pipe supports and concealed arms for the lavatory. Mount lavatory with the front rim 34 inches above floor and with 29 inches minimum clearance from bottom of the front rim to floor. Provide top-mounted solenoid-activated lavatory faucets including battery-powered electrical-operated light-beam-sensor to energize the solenoid.

2.4.4 Kitchen Sinks

ASME A112.19.3/CSA B45.4, 18 gage stainless steel for under mount installation, undersides fully sound deadened, with supply openings for use with top mounted washerless sink faucets, and with 3.5 inch drain outlet. Provide aerator with faucet. Water flow rate shall not exceed 1.5 gpm when measured at a flowing water pressure of 60 psi. Provide stainless steel

drain outlets and stainless steel cup strainers. Provide separate 1.5 inch P-trap and drain piping to vertical vent piping from each compartment. Provide top mounted washerless sink faucets. Provide UL 430 waste disposer as mentioned on schedule.

2.4.5 Drinking-Water Coolers

AHRI 1010 with more than a single thickness of metal between the potable water and the refrigerant in the heat exchanger, wall-hung, bubbler style,dual height with bottle filler, air-cooled condensing unit, 4.75 gph minimum capacity, stainless steel splash receptor and basin, and stainless steel cabinet. Bubblers shall be controlled by push levers or push bars, front mounted or side mounted near the front edge of the cabinet. Bubbler spouts shall be mounted at maximum of 36 inches above floor and at front of unit basin. Spouts shall direct water flow at least 4 inches above unit basin for ADA portion of fixtures and trajectory parallel or nearly parallel to the front of unit. Provide ASME A112.6.1M concealed steel pipe chair carriers.

2.4.6 Precast Terrazzo Mop Sinks

Terrazzo fixture, 28 inch by 28 inch, corner type, shall be made of marble chips cast in white portland cement to produce 3000 psi minimum compressive strength 7 days after casting. Provide floor or wall outlet copper alloy body drain cast integral with terrazzo, with polished stainless steel strainers. Provide wall mounted washerless service sink faucets with vacuum breaker and 0.75 inch external hose threads with pail and mop bracket.

2.5 BACKFLOW PREVENTERS

Backflow prevention devices must be approved by the State or local regulatory agencies. If there is no State or local regulatory agency requirements, the backflow prevention devices must be listed by the Foundation for Cross-Connection Control & Hydraulic Research, or any other approved testing laboratory having equivalent capabilities for both laboratory and field evaluation of backflow prevention devices and assemblies.

Reduced pressure principle assemblies, double check valve assemblies, atmospheric (nonpressure) type vacuum breakers, and pressure type vacuum breakers shall be meet the above requirements.

Backflow preventers with intermediate atmospheric vent shall conform to ASSE 1012. Reduced pressure principle backflow preventers shall conform to ASSE 1013. Hose connection vacuum breakers shall conform to ASSE 1011. Pipe applied atmospheric type vacuum breakers shall conform to ASSE 1001. Pressure vacuum breaker assembly shall conform to ASSE 1020. Air gaps in plumbing systems shall conform to ASME A112.1.2.

2.6 DRAINS

2.6.1 Floor and Shower Drains

Floor and shower drains shall consist of a galvanized body, integral seepage pan, and adjustable perforated or slotted chromium-plated bronze, nickel-bronze, or nickel-brass strainer, consisting of grate and threaded collar. Floor drains shall be cast iron except where metallic waterproofing membrane is installed. Drains shall be of double drainage

pattern for embedding in the floor construction. The seepage pan shall have weep holes or channels for drainage to the drainpipe. The strainer shall be adjustable to floor thickness. A clamping device for attaching flashing or waterproofing membrane to the seepage pan without damaging the flashing or waterproofing membrane shall be provided when required. Drains shall be provided with threaded connection. Between the drain outlet and waste pipe, a neoprene rubber gasket conforming to ASTM C564 may be installed, provided that the drain is specifically designed for the rubber gasket compression type joint. Floor and shower drains shall conform to ASME A112.6.3. Provide drain with trap primer connection, trap primer, and connection piping. Primer shall meet ASSE 1018.

2.6.1.1 Drains and Backwater Valves

Drains and backwater valves installed in connection with waterproofed floors or shower pans shall be equipped with bolted-type device to securely clamp flashing.

2.6.2 Area Drains

Area drains shall be plain pattern with polished stainless steel perforated or slotted grate and bottom outlet. The drain shall be circular or square with a 12 inch nominal overall width or diameter and 10 inch nominal overall depth. Drains shall be cast iron with manufacturer's standard coating. Grate shall be easily lifted out for cleaning. Outlet shall be suitable for inside caulked connection to drain pipe. Drains shall conform to ASME A112.6.3.

2.7 TRAPS

Unless otherwise specified, traps shall be or copper-alloy adjustable tube type with slip joint inlet and swivel. Traps shall be withouta cleanout. Provide traps with removable access panels for easy clean-out at sinks and lavatories. Tubes shall be copper alloy with walls not less than 0.032 inch thick within commercial tolerances, except on the outside of bends where the thickness may be reduced slightly in manufacture by usual commercial methods. Inlets shall have rubber washer and copper alloy nuts for slip joints above the discharge level. Swivel joints shall be below the discharge level and shall be of metal-to-metal or metal-to-plastic type as required for the application. Nuts shall have flats for wrench grip. Outlets shall have internal pipe thread, except that when required for the application, the outlets shall have sockets for solder-joint connections. The depth of the water seal shall be not less than 2 inches. The interior diameter shall be not more than 1/8 inch over or under the nominal size, and interior surfaces shall be reasonably smooth throughout. A copper alloy "P" trap assembly consisting of an adjustable "P" trap and threaded trap wall nipple with cast brass wall flange shall be provided for lavatories. The assembly shall be a standard manufactured unit and may have a rubber-gasketed swivel joint.

2.8 WATER HEATERS

Water heater types and capacities shall be as indicated. Each water heater shall have replaceable anodes. Each primary water heater shall have controls with an adjustable range that includes 90 to 160 degrees F. Hot water systems utilizing recirculation systems shall be tied into building off-hour controls. The thermal efficiencies and standby heat losses shall conform to TABLE III for each type of water heater specified. The only exception is that storage water heaters and hot water storage tanks having

more than 500 gallons storage capacity need not meet the standard loss requirement if the tank surface area is insulated to R-12.5 and if a standing light is not used. Plastic materials polyetherimide (PEI) and polyethersulfone (PES) are forbidden to be used for vent piping of combustion gases. A factory pre-charged expansion tank shall be installed on the cold water supply to each water heater. Expansion tanks shall be specifically designed for use on potable water systems and shall be rated for 200 degrees F water temperature and 150 psi working pressure. The expansion tank size and acceptance volume shall be as indicated.

2.8.1 Automatic Storage Type

Heaters shall be complete with control system, temperature gauge, and pressure gauge, and shall have ASME rated combination pressure and temperature relief valve.

2.8.1.1 Electric Type

Electric type water heaters shall conform to UL 174 with dual heating elements. Each element shall be as indicated. The elements shall be wired so that only one element can operate at a time.

2.8.2 Phenolic Resin Coatings for Heater Tubes

The phenolic resin coating system shall be applied at either the coil or coating manufacturer's factory in accordance with manufacturer's standard proven production process. The coating system shall be a product specifically intended for use on the material the water heating tubes/coils are made of and shall be acceptable for use in potable water systems. The coating system shall be capable of withstanding temperatures up to 400 degrees F dry bulb; and meet the requirements of 21 CFR 175.

The entire exterior surface and the first 5 to 8 inches inside the tubes of each coil shall be coated with phenolic resin coating system.

2.8.2.1 Standard Product

Provide a phenolic resin coating system that is a standard products of a manufacturer regularly engaged in the manufacturing of products that are of a similar material, design and workmanship.

Standard products are defined as components and equipment that have been in satisfactory commercial or industrial use in similar applications of similar size for at least two years before bid opening.

Prior to this two year period, these standard products were sold on the commercial market using advertisements in manufacturers' catalogs or brochures. These manufacturers' catalogs, or brochures shall have been copyrighted documents or be identified with a manufacturer's document number.

2.9 PUMPS

2.9.1 Booster Pumps

2.10 DOMESTIC WATER SERVICE METER

Cold water meters 2 inches and smaller shall be positive displacement type conforming to AWWA C700. Cold water meters 2-1/2 inches and larger shall

be turbine type conforming to AWWA C701. Meter register may be round or straight reading type. Meter shall be provided with a pulse generator, remote readout register and all necessary wiring and accessories and connected to building Direct Digital Controls system.

2.11 Ice Maker Valve Box

Recessed wall box fabricated of painted metal with integral ball valve and water hammer arrestor.

2.12 ELECTRICAL WORK

Provide electrical motor driven equipment specified complete with motors, motor starters, and controls as specified herein and in Section 26 20 00 INTERIOR DISTRIBUTION SYSTEM. Provide internal wiring for components of packaged equipment as an integral part of the equipment. Provide high efficiency type, single-phase, fractional-horsepower alternating-current motors, including motors that are part of a system, corresponding to the applications in accordance with NEMA MG 11. In addition to the requirements of Section 26 20 00 INTERIOR DISTRIBUTION SYSTEM, provide polyphase, squirrel-cage medium induction motors with continuous ratings, including motors that are part of a system, that meet the efficiency ratings for premium efficiency motors in accordance with NEMA MG 1. Provide motors in accordance with NEMA MG 1 and of sufficient size to drive the load at the specified capacity without exceeding the nameplate rating of the motor.

Motors shall be rated for continuous duty with the enclosure specified. Motor duty requirements shall allow for maximum frequency start-stop operation and minimum encountered interval between start and stop. Motor torque shall be capable of accelerating the connected load within 20 seconds with 80 percent of the rated voltage maintained at motor terminals during one starting period. Motor bearings shall be fitted with grease supply fittings and grease relief to outside of the enclosure.

Controllers and contactors shall have auxiliary contacts for use with the controls provided. Manual or automatic control and protective or signal devices required for the operation specified and any control wiring required for controls and devices specified, but not shown, shall be provided. For packaged equipment, the manufacturer shall provide controllers, including the required monitors and timed restart.

Power wiring and conduit for field installed equipment shall be provided under and conform to the requirements of Section 26 20 00 INTERIOR DISTRIBUTION SYSTEM.

2.13 MISCELLANEOUS PIPING ITEMS

2.13.1 Escutcheon Plates

Provide one piece or split hinge metal plates for piping entering floors, walls, and ceilings in exposed spaces. Provide chromium-plated on copper alloy plates or polished stainless steel finish in finished spaces. Provide paint finish on plates in unfinished spaces.

2.13.2 Pipe Sleeves

Provide where piping passes entirely through walls, ceilings, roofs, and floors. Sleeves are not required where drain, waste, and vent (DWV)

piping passes through concrete floor slabs located on grade, except where penetrating a membrane waterproof floor.

2.13.2.1 Sleeves in Masonry and Concrete

Provide steel pipe sleeves or schedule 40 PVC plastic pipe sleeves. Sleeves are not required where drain, waste, and vent (DWV) piping passes through concrete floor slabs located on grade.

2.13.2.2 Sleeves Not in Masonry and Concrete

Provide 26 gage galvanized steel sheet or PVC plastic pipe sleeves.

2.13.3 Pipe Hangers (Supports)

Provide MSS SP-58 and MSS SP-69, Type 1 with adjustable type steel support rods, except as specified or indicated otherwise. Attach to steel joists with Type 19 or 23 clamps and retaining straps. Attach to Steel W or S beams with Type 21, 28, 29, or 30 clamps. Attach to steel angles and vertical web steel channels with Type 20 clamp with beam clamp channel adapter. Attach to horizontal web steel channel and wood with drilled hole on centerline and double nut and washer. Attach to concrete with Type 18 insert or drilled expansion anchor. Provide Type 40 insulation protection shield for insulated piping.

2.13.4 Nameplates

Provide 0.125 inch thick melamine laminated plastic nameplates, black matte finish with white center core, for equipment, gages, thermometers, and valves; valves in supplies to faucets will not require nameplates. Accurately align lettering and engrave minimum of 0.25 inch high normal block lettering into the white core. Minimum size of nameplates shall be 1.0 by 2.5 inches. Key nameplates to a chart and schedule for each system. Frame charts and schedules under glass and place where directed near each system. Furnish two copies of each chart and schedule.

PART 3 EXECUTION

3.1 GENERAL INSTALLATION REQUIREMENTS

Piping located in air plenums shall conform to NFPA 90A requirements. Piping located in shafts that constitute air ducts or that enclose air ducts shall be noncombustible in accordance with NFPA 90A. Installation of plastic pipe where in compliance with NFPA may be installed in accordance with PPFA Fire Man. The plumbing system shall be installed complete with necessary fixtures, fittings, traps, valves, and accessories. Water and drainage piping shall be extended 5 feet outside the building, unless otherwise indicated. A full port ball valve and drain shall be installed on the water service line inside the building approximately 6 inches above the floor from point of entry. Piping shall be connected to the exterior service lines or capped or plugged if the exterior service is not in place. Sewer and water pipes shall be laid in separate trenches, except when otherwise shown. Exterior underground utilities shall be at least 12 inches below the average local frost depth or as indicated on the drawings. If trenches are closed or the pipes are otherwise covered before being connected to the service lines, the location of the end of each plumbing utility shall be marked with a stake or other acceptable means. Valves shall be installed with control no lower than the valve body.

3.1.1 Water Pipe, Fittings, and Connections

3.1.1.1 Utilities

The piping shall be extended to fixtures, outlets, and equipment. The hot-water and cold-water piping system shall be arranged and installed to permit draining. The supply line to each item of equipment or fixture, except faucets, flush valves, or other control valves which are supplied with integral stops, shall be equipped with a shutoff valve to enable isolation of the item for repair and maintenance without interfering with operation of other equipment or fixtures. Supply piping to fixtures, faucets, hydrants, shower heads, and flushing devices shall be anchored to prevent movement.

3.1.1.2 Cutting and Repairing

The work shall be carefully laid out in advance, and unnecessary cutting of construction shall be avoided. Damage to building, piping, wiring, or equipment as a result of cutting shall be repaired by mechanics skilled in the trade involved.

3.1.1.3 Protection of Fixtures, Materials, and Equipment

Pipe openings shall be closed with caps or plugs during installation. Fixtures and equipment shall be tightly covered and protected against dirt, water, chemicals, and mechanical injury. Upon completion of the work, the fixtures, materials, and equipment shall be thoroughly cleaned, adjusted, and operated. Safety guards shall be provided for exposed rotating equipment.

3.1.1.4 Mains, Branches, and Runouts

Piping shall be installed as indicated. Pipe shall be accurately cut and worked into place without springing or forcing. Structural portions of the building shall not be weakened. Aboveground piping shall run parallel with the lines of the building, unless otherwise indicated. Branch pipes from service lines may be taken from top, bottom, or side of main, using crossover fittings required by structural or installation conditions. Supply pipes, valves, and fittings shall be kept a sufficient distance from other work and other services to permit not less than 1/2 inch between finished covering on the different services. Bare and insulated water lines shall not bear directly against building structural elements so as to transmit sound to the structure or to prevent flexible movement of the lines. Water pipe shall not be buried in or under floors unless specifically indicated or approved. Changes in pipe sizes shall be made with reducing fittings. Use of bushings will not be permitted except for use in situations in which standard factory fabricated components are furnished to accommodate specific accepted installation practice. Change in direction shall be made with fittings, except that bending of pipe 4 inches and smaller will be permitted, provided a pipe bender is used and wide sweep bends are formed. The center-line radius of bends shall be not less than six diameters of the pipe. Bent pipe showing kinks, wrinkles, flattening, or other malformations will not be acceptable.

3.1.1.5 Pipe Drains

Pipe drains indicated shall consist of 3/4 inch hose bibb with renewable seat and full port ball valve ahead of hose bibb. At other low points, 3/4 inch brass plugs or caps shall be provided. Disconnection of the supply

piping at the fixture is an acceptable drain.

3.1.1.6 Expansion and Contraction of Piping

Allowance shall be made throughout for expansion and contraction of water pipe. Each hot-water and hot-water circulation riser shall have expansion loops or other provisions such as offsets, changes in direction, etc., where indicated and/or required. Risers shall be securely anchored as required or where indicated to force expansion to loops. Branch connections from risers shall be made with ample swing or offset to avoid undue strain on fittings or short pipe lengths. Horizontal runs of pipe over 50 feet in length shall be anchored to the wall or the supporting construction about midway on the run to force expansion, evenly divided, toward the ends. Sufficient flexibility shall be provided on branch runouts from mains and risers to provide for expansion and contraction of piping. Flexibility shall be provided by installing one or more turns in the line so that piping will spring enough to allow for expansion without straining. If mechanical grooved pipe coupling systems are provided, the deviation from design requirements for expansion and contraction may be allowed pending approval of Contracting Officer.

3.1.1.7 Thrust Restraint

Plugs, caps, tees, valves and bends deflecting 11.25 degrees or more, either vertically or horizontally, in waterlines 4 inches in diameter or larger shall be provided with thrust blocks, where indicated, to prevent movement. Thrust blocking shall be concrete of a mix not leaner than: 1 cement, 2-1/2 sand, 5 gravel; and having a compressive strength of not less than 2000 psi after 28 days. Blocking shall be placed between solid ground and the fitting to be anchored. Unless otherwise indicated or directed, the base and thrust bearing sides of the thrust block shall be poured against undisturbed earth. The side of the thrust block not subject to thrust shall be poured against forms. The area of bearing will be as shown. Blocking shall be placed so that the joints of the fitting are accessible for repair. Steel rods and clamps, protected by galvanizing or by coating with bituminous paint, shall be used to anchor vertical down bends into gravity thrust blocks.

3.1.1.8 Commercial-Type Water Hammer Arresters

Commercial-type water hammer arresters shall be provided on hot- and cold-water supplies and shall be located as generally indicated, with precise location and sizing to be in accordance with PDI WH 201. Water hammer arresters, where concealed, shall be accessible by means of access doors or removable panels. Commercial-type water hammer arresters shall conform to ASSE 1010. Vertical capped pipe columns will not be permitted.

3.1.2 Joints

Installation of pipe and fittings shall be made in accordance with the manufacturer's recommendations. Mitering of joints for elbows and notching of straight runs of pipe for tees will not be permitted. Joints shall be made up with fittings of compatible material and made for the specific purpose intended.

3.1.2.1 Threaded

Threaded joints shall have American Standard taper pipe threads conforming to ASME B1.20.1. Only male pipe threads shall be coated with graphite or

with an approved graphite compound, or with an inert filler and oil, or shall have a polytetrafluoroethylene tape applied.

3.1.2.2 Unions and Flanges

Unions, flanges and mechanical couplings shall not be concealed in walls, ceilings, or partitions. Unions shall be used on pipe sizes 2-1/2 inches and smaller; flanges shall be used on pipe sizes 3 inches and larger.

3.1.2.3 Cast Iron Soil, Waste and Vent Pipe

Bell and spigot compression and hubless gasketed clamp joints for soil, waste and vent piping shall be installed per the manufacturer's recommendations.

3.1.2.4 Copper Tube and Pipe

a. Brazed. Brazed joints shall be made in conformance with AWS B2.2/B2.2M, ASME B16.50, and CDA A4015 with flux and are acceptable for all pipe sizes. Copper to copper joints shall include the use of copper-phosphorus or copper-phosphorus-silver brazing metal without flux. Brazing of dissimilar metals (copper to bronze or brass) shall include the use of flux with either a copper-phosphorus, copper-phosphorus-silver or a silver brazing filler metal.

b. Soldered. Soldered joints shall be made with flux and are only acceptable for piping 2 inches and smaller. Soldered joints shall conform to ASME B31.5 and CDA A4015. Soldered joints shall not be used in compressed air piping between the air compressor and the receiver.

c. Copper Tube Extracted Joint. Mechanically extracted joints shall be made in accordance with ICC IPC.

3.1.2.5 Plastic Pipe

PVC and CPVC pipe shall have joints made with solvent cement elastomeric, threading, (threading of Schedule 80 Pipe is allowed only where required for disconnection and inspection; threading of Schedule 40 Pipe is not allowed), or mated flanged.

3.1.3 Dissimilar Pipe Materials

Connections between ferrous and non-ferrous copper water pipe shall be made with dielectric unions or flange waterways. Dielectric waterways shall have temperature and pressure rating equal to or greater than that specified for the connecting piping. Waterways shall have metal connections on both ends suited to match connecting piping. Dielectric waterways shall be internally lined with an insulator specifically designed to prevent current flow between dissimilar metals. Dielectric flanges shall meet the performance requirements described herein for dielectric waterways. Connecting joints between plastic and metallic pipe shall be made with transition fitting for the specific purpose.

3.1.4 Corrosion Protection for Buried Pipe and Fittings

Ductile iron, cast iron, and steel pipe, fittings, and joints shall have a protective coating. Coatings shall be selected, applied, and inspected in accordance with NACE SP0169 and as otherwise specified. The pipe shall be cleaned and the coating system applied prior to pipe tightness testing.

Joints and fittings shall be cleaned and the coating system applied after pipe tightness testing. For tape coating systems, the tape shall conform to AWWA C203 and shall be applied with a 50 percent overlap. Primer utilized with tape type coating systems shall be as recommended by the tape manufacturer.

3.1.5 Pipe Sleeves and Flashing

Pipe sleeves shall be furnished and set in their proper and permanent location.

3.1.5.1 Sleeve Requirements

Unless indicated otherwise, provide pipe sleeves meeting the following requirements:

Secure sleeves in position and location during construction. Provide sleeves of sufficient length to pass through entire thickness of walls, ceilings, roofs, and floors.

A modular mechanical type sealing assembly may be installed in lieu of a waterproofing clamping flange and caulking and sealing of annular space between pipe and sleeve. The seals shall consist of interlocking synthetic rubber links shaped to continuously fill the annular space between the pipe and sleeve using galvanized steel bolts, nuts, and pressure plates. The links shall be loosely assembled with bolts to form a continuous rubber belt around the pipe with a pressure plate under each bolt head and each nut. After the seal assembly is properly positioned in the sleeve, tightening of the bolt shall cause the rubber sealing elements to expand and provide a watertight seal between the pipe and the sleeve. Each seal assembly shall be sized as recommended by the manufacturer to fit the pipe and sleeve involved.

Sleeves shall not be installed in structural members, except where indicated or approved. Rectangular and square openings shall be as detailed. Each sleeve shall extend through its respective floor, or roof, and shall be cut flush with each surface, except for special circumstances. Pipe sleeves passing through floors in wet areas such as mechanical equipment rooms, lavatories, kitchens, and other plumbing fixture areas shall extend a minimum of 4 inches above the finished floor.

Unless otherwise indicated, sleeves shall be of a size to provide a minimum of 1/4 inch clearance between bare pipe or insulation and inside of sleeve or between insulation and inside of sleeve. Sleeves in bearing walls and concrete slab on grade floors shall be steel pipe or cast-iron pipe. Sleeves in nonbearing walls or ceilings may be steel pipe, cast-iron pipe, galvanized sheet metal with lock-type longitudinal seam, or plastic.

Except as otherwise specified, the annular space between pipe and sleeve, or between jacket over insulation and sleeve, shall be sealed as indicated with sealants conforming to ASTM C920 and with a primer, backstop material and surface preparation as specified in Section 07 92 00 JOINT SEALANTS. The annular space between pipe and sleeve, between bare insulation and sleeve or between jacket over insulation and sleeve shall not be sealed for interior walls which are not designated as fire rated.

Sleeves through below-grade walls in contact with earth shall be recessed 1/2 inch from wall surfaces on both sides. Annular space between pipe and sleeve shall be filled with backing material and sealants in the joint

between the pipe and concrete ormasonry wall as specified above. Sealant selected for the earth side of the wall shall be compatible with dampproofing/waterproofing materials that are to be applied over the joint sealant. Pipe sleeves in fire-rated walls shall conform to the requirements in Section 07 84 00 FIRESTOPPING.

3.1.5.2 Flashing Requirements

Pipes passing through roof shall be installed through a 16 ounce copper flashing, each within an integral skirt or flange. Flashing shall be suitably formed, and the skirt or flange shall extend not less than 8 inches from the pipe and shall be set over the roof or floor membrane in a solid coating of bituminous cement. The flashing shall extend up the pipe a minimum of 10 inches. For cleanouts, the flashing shall be turned down into the hub and caulked after placing the ferrule. Pipes passing through pitched roofs shall be flashed, using lead or copper flashing, with an adjustable integral flange of adequate size to extend not less than 8 inches from the pipe in all directions and lapped into the roofing to provide a watertight seal. The annular space between the flashing and the bare pipe or between the flashing and the metal-jacket-covered insulation shall be sealed as indicated. Flashing for dry vents shall be turned down into the pipe to form a waterproof joint. Pipes, up to and including 10 inches in diameter, passing through roof or floor waterproofing membrane may be installed through a cast-iron sleeve with caulking recess, anchor lugs, flashing-clamp device, and pressure ring with brass bolts. Flashing shield shall be fitted into the sleeve clamping device. Pipes passing through wall waterproofing membrane shall be sleeved as described above. A waterproofing clamping flange shall be installed.

3.1.5.3 Waterproofing

Waterproofing at floor-mounted water closets shall be accomplished by forming a flashing guard from soft-tempered sheet copper. The center of the sheet shall be perforated and turned down approximately 1-1/2 inches to fit between the outside diameter of the drainpipe and the inside diameter of the cast-iron or steel pipe sleeve. The turned-down portion of the flashing guard shall be embedded in sealant to a depth of approximately 1-1/2 inches; then the sealant shall be finished off flush to floor level between the flashing guard and drainpipe. The flashing guard of sheet copper shall extend not less than 8 inches from the drainpipe and shall be lapped between the floor membrane in a solid coating of bituminous cement. If cast-iron water closet floor flanges are used, the space between the pipe sleeve and drainpipe shall be sealed with sealant and the flashing guard shall be upturned approximately 1-1/2 inches to fit the outside diameter of the drainpipe and the inside diameter of the water closet floor flange. The upturned portion of the sheet fitted into the floor flange shall be sealed.

3.1.5.4 Optional Counterflashing

Instead of turning the flashing down into a dry vent pipe, or caulking and sealing the annular space between the pipe and flashing or metal-jacket-covered insulation and flashing, counterflashing may be accomplished by utilizing the following:

a. A standard roof coupling for threaded pipe up to 6 inches in diameter.

b. A tack-welded or banded-metal rain shield around the pipe.

3.1.5.5 Pipe Penetrations of Slab on Grade Floors

Where pipes, fixture drains, floor drains, cleanouts or similar items penetrate slab on grade floors, except at penetrations of floors with waterproofing membrane as specified in paragraphs Flashing Requirements and Waterproofing, a groove 1/4 to 1/2 inch wide by 1/4 to 3/8 inch deep shall be formed around the pipe, fitting or drain. The groove shall be filled with a sealant as specified in Section 07 92 00 JOINT SEALANTS.

3.1.5.6 Pipe Penetrations

Provide sealants for all pipe penetrations. All pipe penetrations shall be sealed to prevent infiltration of air, insects, and vermin.

3.1.6 Fire Seal

Where pipes pass through fire walls, fire-partitions, fire-rated pipe chase walls or floors above grade, a fire seal shall be provided as specified in Section 07 84 00 FIRESTOPPING.

3.1.7 Supports

3.1.7.1 General

Hangers used to support piping 2 inches and larger shall be fabricated to permit adequate adjustment after erection while still supporting the load. Pipe guides and anchors shall be installed to keep pipes in accurate alignment, to direct the expansion movement, and to prevent buckling, swaying, and undue strain. Piping subjected to vertical movement when operating temperatures exceed ambient temperatures shall be supported by variable spring hangers and supports or by constant support hangers. In the support of multiple pipe runs on a common base member, a clip or clamp shall be used where each pipe crosses the base support member. Spacing of the base support members shall not exceed the hanger and support spacing required for an individual pipe in the multiple pipe run. Threaded sections of rods shall not be formed or bent.

3.1.7.2 Pipe Supports and Structural Bracing, Seismic Requirements

Piping and attached valves shall be supported and braced to resist seismic loads as specified in Section 23 05 48.00 40 VIBRATION SEISMIC CONTROLS FOR HVAC PIPING AND EQUIPMENT. Structural steel required for reinforcement to properly support piping, headers, and equipment, but not shown, shall be provided. Material used for supports shall be as specified in Section 05 12 00 STRUCTURAL STEEL.

3.1.7.3 Pipe Hangers, Inserts, and Supports

Installation of pipe hangers, inserts and supports shall conform to MSS SP-58 and MSS SP-69, except as modified herein.

a. Types 5, 12, and 26 shall not be used.

b. Type 3 shall not be used on insulated pipe.

c. Type 18 inserts shall be secured to concrete forms before concrete is placed. Continuous inserts which allow more adjustment may be used if they otherwise meet the requirements for type 18 inserts.

d. Type 19 and 23 C-clamps shall be torqued per MSS SP-69 and shall have both locknuts and retaining devices furnished by the manufacturer. Field-fabricated C-clamp bodies or retaining devices are not acceptable.

e. Type 20 attachments used on angles and channels shall be furnished with an added malleable-iron heel plate or adapter.

f. Type 24 may be used only on trapeze hanger systems or on fabricated frames.

g. Type 39 saddles shall be used on insulated pipe 4 inches and larger when the temperature of the medium is 60 degrees F or higher. Type 39 saddles shall be welded to the pipe.

h. Type 40 shields shall:

(1) Be used on insulated pipe less than 4 inches.

(2) Have a high density insert for all pipe sizes. High density inserts shall have a density of 8 pcf or greater.

i. Horizontal pipe supports shall be spaced as specified in MSS SP-69 and a support shall be installed not over 1 foot from the pipe fitting joint at each change in direction of the piping. Pipe supports shall be spaced not over 5 feet apart at valves. Operating temperatures in determining hanger spacing for PVC or CPVC pipe shall be 120 degrees F for PVC and 180 degrees F for CPVC. Horizontal pipe runs shall include allowances for expansion and contraction.

j. Vertical pipe shall be supported at each floor, except at slab-on-grade, at intervals of not more than 15 feet nor more than 8 feet from end of risers, and at vent terminations. Vertical pipe risers shall include allowances for expansion and contraction.

k. Type 35 guides using steel, reinforced polytetrafluoroethylene (PTFE) or graphite slides shall be provided to allow longitudinal pipe movement. Slide materials shall be suitable for the system operating temperatures, atmospheric conditions, and bearing loads encountered. Lateral restraints shall be provided as needed. Where steel slides do not require provisions for lateral restraint the following may be used:

(1) On pipe less than 4 inches a Type 40 shield, attached to the pipe or insulation, may freely rest on a steel plate.

l. Pipe hangers on horizontal insulated pipe shall be the size of the outside diameter of the insulation. The insulation shall be continuous through the hanger on all pipe sizes and applications.

m. Where there are high system temperatures and welding to piping is not desirable, the type 35 guide shall include a pipe cradle, welded to the guide structure and strapped securely to the pipe. The pipe shall be separated from the slide material by at least 4 inches or by an amount adequate for the insulation, whichever is greater.

n. Hangers and supports for plastic pipe shall not compress, distort, cut or abrade the piping, and shall allow free movement of pipe except where otherwise required in the control of expansion/contraction.

3.1.7.4 Structural Attachments

Attachment to building structure concrete and masonry shall be by cast-in concrete inserts, built-in anchors, or masonry anchor devices. Inserts and anchors shall be applied with a safety factor not less than 5. Supports shall not be attached to metal decking. Supports shall not be attached to the underside of concrete filled floor or concrete roof decks unless approved by the Contracting Officer. Masonry anchors for overhead applications shall be constructed of ferrous materials only.

3.1.8 Pipe Cleanouts

Pipe cleanouts shall be the same size as the pipe except that cleanout plugs larger than 4 inches will not be required. A cleanout installed in connection with cast-iron soil pipe shall consist of a long-sweep 1/4 bend or one or two 1/8 bends extended to the place shown. An extra-heavy cast-brass or cast-iron ferrule with countersunk cast-brass head screw plug shall be caulked into the hub of the fitting and shall be flush with the floor. Cleanouts in connection with other pipe, where indicated, shall be T-pattern, 90-degree branch drainage fittings with cast-brass screw plugs, except plastic plugs shall be installed in plastic pipe. Plugs shall be the same size as the pipe up to and including 4 inches. Cleanout tee branches with screw plug shall be installed at the foot of soil and waste stacks, at the foot of interior downspouts, on each connection to building storm drain where interior downspouts are indicated, and on each building drain outside the building. Cleanout tee branches may be omitted on stacks in single story buildings with slab-on-grade construction or where less than 18 inches of crawl space is provided under the floor. Cleanouts on pipe concealed in partitions shall be provided with chromium plated bronze, nickel bronze, nickel brass or stainless steel flush type access cover plates. Round access covers shall be provided and secured to plugs with securing screw. Square access covers may be provided with matching frames, anchoring lugs and cover screws. Cleanouts in finished walls shall have access covers and frames installed flush with the finished wall. Cleanouts installed in finished floors subject to foot traffic shall be provided with a chrome-plated cast brass, nickel brass, or nickel bronze cover secured to the plug or cover frame and set flush with the finished floor. Heads of fastening screws shall not project above the cover surface. Where cleanouts are provided with adjustable heads, the heads shall be cast iron or plastic.

3.2 WATER HEATERS AND HOT WATER STORAGE TANKS

3.2.1 Relief Valves

No valves shall be installed between a relief valve and its water heater or storage tank. The P&T relief valve shall be installed where the valve actuator comes in contact with the hottest water in the heater. Whenever possible, the relief valve shall be installed directly in a tapping in the tank or heater; otherwise, the P&T valve shall be installed in the hot-water outlet piping. A vacuum relief valve shall be provided on the cold water supply line to the hot-water storage tank or water heater and mounted above and within 6 inches above the top of the tank or water heater.

3.2.2 Connections to Water Heaters

Connections of metallic pipe to water heaters shall be made with dielectric unions or flanges.

3.2.3 Expansion Tank

A pre-charged expansion tank shall be installed on the cold water supply between the water heater inlet and the cold water supply shut-off valve. The Contractor shall adjust the expansion tank air pressure, as recommended by the tank manufacturer, to match incoming water pressure.

3.3 FIXTURES AND FIXTURE TRIMMINGS

Polished chromium-plated pipe, valves, and fittings shall be provided where exposed to view. Angle stops, straight stops, stops integral with the faucets, or concealed type of lock-shield, and loose-key pattern stops for supplies with threaded, sweat or solvent weld inlets shall be furnished and installed with fixtures. Where connections between copper tubing and faucets are made by rubber compression fittings, a beading tool shall be used to mechanically deform the tubing above the compression fitting. Exposed traps and supply pipes for fixtures and equipment shall be connected to the rough piping systems at the wall, unless otherwise specified under the item. Floor and wall escutcheons shall be as specified. Drain lines and hot water lines of fixtures for handicapped personnel shall be insulated and do not require polished chrome finish. Plumbing fixtures and accessories shall be installed within the space shown.

3.3.1 Fixture Connections

Where space limitations prohibit standard fittings in conjunction with the cast-iron floor flange, special short-radius fittings shall be provided. Connections between earthenware fixtures and flanges on soil pipe shall be made gastight and watertight with a closet-setting compound or neoprene gasket and seal. Use of natural rubber gaskets or putty will not be permitted. Fixtures with outlet flanges shall be set the proper distance from floor or wall to make a first-class joint with the closet-setting compound or gasket and fixture used.

3.3.2 Flushometer Valves

Flushometer valves shall be secured to prevent movement by anchoring the long finished top spud connecting tube to wall adjacent to valve with approved metal bracket. Flushometer valves for water closets shall be installed 39 inches above the floor, except at water closets intended for use by the physically handicapped where flushometer valves shall be mounted at approximately 30 inches above the floor and arranged to avoid interference with grab bars. In addition, for water closets intended for handicap use, the flush valve handle shall be installed on the wide side of the enclosure.

3.3.3 Height of Fixture Rims Above Floor

Lavatories shall be mounted with rim 31 inches above finished floor. Wall-hung drinking fountains and water coolers shall be installed with rim 42 inches above floor. Wall-hung service sinks shall be mounted with rim 28 inches above the floor. Installation of fixtures for use by the physically handicapped shall be in accordance with ICC A117.1.

3.3.4 Fixture Supports

Fixture supports for off-the-floor lavatories, urinals, water closets, and other fixtures of similar size, design, and use, shall be of the chair-carrier type. The carrier shall provide the necessary means of

mounting the fixture, with a foot or feet to anchor the assembly to the floor slab. Adjustability shall be provided to locate the fixture at the desired height and in proper relation to the wall. Support plates, in lieu of chair carrier, shall be fastened to the wall structure only where it is not possible to anchor a floor-mounted chair carrier to the floor slab.

3.3.4.1 Support for Solid Masonry Construction

Chair carrier shall be anchored to the floor slab. Where a floor-anchored chair carrier cannot be used, a suitable wall plate shall be imbedded in the masonry wall.

3.3.4.2 Support for Concrete-Masonry Wall Construction

Chair carrier shall be anchored to floor slab. Where a floor-anchored chair carrier cannot be used, a suitable wall plate shall be fastened to the concrete wall using through bolts and a back-up plate.

3.3.4.3 Support for Steel Stud Frame Partitions

Chair carrier shall be used. The anchor feet and tubular uprights shall be of the heavy duty design; and feet (bases) shall be steel and welded to a square or rectangular steel tube upright. Wall plates, in lieu of floor-anchored chair carriers, shall be used only if adjoining steel partition studs are suitably reinforced to support a wall plate bolted to these studs.

3.3.5 Backflow Prevention Devices

Plumbing fixtures, equipment, and pipe connections shall not cross connect or interconnect between a potable water supply and any source of nonpotable water. Backflow preventers shall be installed where indicated and in accordance with ICC IPC at all other locations necessary to preclude a cross-connect or interconnect between a potable water supply and any nonpotable substance. In addition backflow preventers shall be installed at all locations where the potable water outlet is below the flood level of the equipment, or where the potable water outlet will be located below the level of the nonpotable substance. Backflow preventers shall be located so that no part of the device will be submerged. Backflow preventers shall be of sufficient size to allow unrestricted flow of water to the equipment, and preclude the backflow of any nonpotable substance into the potable water system. Bypass piping shall not be provided around backflow preventers. Access shall be provided for maintenance and testing. Each device shall be a standard commercial unit.

3.3.6 Access Panels

Access panels shall be provided for concealed valves and controls, or any item requiring inspection or maintenance. Access panels shall be of sufficient size and located so that the concealed items may be serviced, maintained, or replaced. Access panels shall be as specified in Section 05 50 13 MISCELLANEOUS METAL FABRICATIONS.

3.3.7 Sight Drains

Sight drains shall be installed so that the indirect waste will terminate 2 inches above the flood rim of the funnel to provide an acceptable air gap.

3.3.8 Traps

Each trap shall be placed as near the fixture as possible, and no fixture shall be double-trapped. Traps installed on cast-iron soil pipe shall be cast iron. Traps installed on steel pipe or copper tubing shall be recess-drainage pattern, or brass-tube type. Traps installed on plastic pipe may be plastic conforming to ASTM D3311. Traps for acid-resisting waste shall be of the same material as the pipe.

3.4 VIBRATION-ABSORBING FEATURES

Mechanical equipment, including compressors and pumps, shall be isolated from the building structure by approved vibration-absorbing features, unless otherwise shown. Each foundation shall include an adequate number of standard isolation units. Each unit shall consist of machine and floor or foundation fastening, together with intermediate isolation material, and shall be a standard product with printed load rating. Piping connected to mechanical equipment shall be provided with flexible connectors. Isolation unit installation shall limit vibration to 1 percent of the lowest equipment rpm.

3.5 WATER METER REMOTE READOUT REGISTER

The remote readout register shall be mounted at the location indicated or as directed by the Contracting Officer.

3.6 IDENTIFICATION SYSTEMS

3.6.1 Identification Tags

Identification tags made of brass, engraved laminated plastic, or engraved anodized aluminum, indicating service and valve number shall be installed on valves, except those valves installed on supplies at plumbing fixtures. Tags shall be 1-3/8 inch minimum diameter, and marking shall be stamped or engraved. Indentations shall be black, for reading clarity. Tags shall be attached to valves with No. 12 AWG, copper wire, chrome-plated beaded chain, or plastic straps designed for that purpose.

3.6.2 Pipe Color Code Marking

Color code marking of piping shall be as specified in Section 09 90 00 PAINTS AND COATINGS.

3.6.3 Color Coding Scheme for Locating Hidden Utility Components

Scheme shall be provided in buildings having suspended grid ceilings. The color coding scheme shall identify points of access for maintenance and operation of operable components which are not visible from the finished space and installed in the space directly above the suspended grid ceiling. The operable components shall include valves, dampers, switches, linkages and thermostats. The color coding scheme shall consist of a color code board and colored metal disks. Each colored metal disk shall be approximately 3/8 inch in diameter and secured to removable ceiling panels with fasteners. The fasteners shall be inserted into the ceiling panels so that the fasteners will be concealed from view. The fasteners shall be manually removable without tools and shall not separate from the ceiling panels when panels are dropped from ceiling height. Installation of colored metal disks shall follow completion of the finished surface on which the disks are to be fastened. The color code board shall have the

approximate dimensions of 3 foot width, 30 inches height, and 1/2 inch thickness. The board shall be made of wood fiberboard and framed under glass or 1/16 inch transparent plastic cover. Unless otherwise directed, the color code symbols shall be approximately 3/4 inch in diameter and the related lettering in 1/2 inch high capital letters. The color code board shall be mounted and located in the mechanical or equipment room. The color code system shall be as indicated by the Contracting Officer.

3.7 ESCUTCHEONS

Escutcheons shall be provided at finished surfaces where bare or insulated piping, exposed to view, passes through floors, walls, or ceilings, except in boiler, utility, or equipment rooms. Escutcheons shall be fastened securely to pipe or pipe covering and shall be satin-finish, corrosion-resisting steel, polished chromium-plated zinc alloy, or polished chromium-plated copper alloy. Escutcheons shall be either one-piece or split-pattern, held in place by internal spring tension or setscrew.

3.8 PAINTING

Painting of pipes, hangers, supports, and other iron work, either in concealed spaces or exposed spaces, is specified in Section 09 90 00 PAINTS AND COATINGS.

3.8.1 Painting of New Equipment

New equipment painting shall be factory applied or shop applied, and shall be as specified herein, and provided under each individual section.

3.8.1.1 Factory Painting Systems

Manufacturer's standard factory painting systems may be provided subject to certification that the factory painting system applied will withstand 125 hours in a salt-spray fog test, except that equipment located outdoors shall withstand 3000 hours in a salt-spray fog test. Salt-spray fog test shall be in accordance with ASTM B117, and for that test the acceptance criteria shall be as follows: immediately after completion of the test, the paint shall show no signs of blistering, wrinkling, or cracking, and no loss of adhesion; and the specimen shall show no signs of rust creepage beyond 0.125 inch on either side of the scratch mark.

The film thickness of the factory painting system applied on the equipment shall not be less than the film thickness used on the test specimen. If manufacturer's standard factory painting system is being proposed for use on surfaces subject to temperatures above 120 degrees F, the factory painting system shall be designed for the temperature service.

3.8.1.2 Shop Painting Systems for Metal Surfaces

Clean, pretreat, prime and paint metal surfaces; except aluminum surfaces need not be painted. Apply coatings to clean dry surfaces. Clean the surfaces to remove dust, dirt, rust, oil and grease by wire brushing and solvent degreasing prior to application of paint, except metal surfaces subject to temperatures in excess of 120 degrees F shall be cleaned to bare metal.

Where more than one coat of paint is specified, apply the second coat after the preceding coat is thoroughly dry. Lightly sand damaged painting and retouch before applying the succeeding coat. Color of finish coat shall be

aluminum or light gray.

a. Temperatures Less Than 120 Degrees F: Immediately after cleaning, the metal surfaces subject to temperatures less than 120 degrees F shall receive one coat of pretreatment primer applied to a minimum dry film thickness of 0.3 mil, one coat of primer applied to a minimum dry film thickness of one mil; and two coats of enamel applied to a minimum dry film thickness of one mil per coat.

b. Temperatures Between 120 and 400 Degrees F: Metal surfaces subject to temperatures between 120 and 400 degrees F shall receive two coats of 400 degrees F heat-resisting enamel applied to a total minimum thickness of 2 mils.

c. Temperatures Greater Than 400 Degrees F: Metal surfaces subject to temperatures greater than 400 degrees F shall receive two coats of 600 degrees F heat-resisting paint applied to a total minimum dry film thickness of 2 mils.

3.9 TESTS, FLUSHING AND DISINFECTION

3.9.1 Plumbing System

The following tests shall be performed on the plumbing system in accordance with ICC IPC, except that the drainage and vent system final test shall include the smoke test. The Contractor has the option to perform a peppermint test in lieu of the smoke test. If a peppermint test is chosen, the Contractor must submit a testing procedure to the Contracting Officer for approval.

a. Drainage and Vent Systems Test. The final test shall include a smoke test.

b. Building Sewers Tests.

c. Water Supply Systems Tests.

3.9.1.1 Test of Backflow Prevention Assemblies

Backflow prevention assembly shall be tested using gauges specifically designed for the testing of backflow prevention assemblies.

Backflow prevention assembly test gauges shall be tested annually for accuracy in accordance with the requirements of State or local regulatory agencies. If there is no State or local regulatory agency requirements, gauges shall be tested annually for accuracy in accordance with the requirements of University of Southern California's Foundation of Cross Connection Control and Hydraulic Research or the American Water Works Association Manual of Cross Connection (Manual M-14), or any other approved testing laboratory having equivalent capabilities for both laboratory and field evaluation of backflow prevention assembly test gauges. Report form for each assembly shall include, as a minimum, the following:

Data on Device	Data on Testing Firm
Type of Assembly	Name

Manufacturer	Address
Model Number	Certified Tester
Serial Number	Certified Tester No.
Size	Date of Test
Location	
Test Pressure Readings	Serial Number and Test Data of Gauges

If the unit fails to meet specified requirements, the unit shall be repaired and retested.

3.9.2 Defective Work

If inspection or test shows defects, such defective work or material shall be replaced or repaired as necessary and inspection and tests shall be repeated. Repairs to piping shall be made with new materials. Caulking of screwed joints or holes will not be acceptable.

3.9.3 System Flushing

3.9.3.1 During Flushing

Before operational tests or disinfection, potable water piping system shall be flushed with hot potable water. Sufficient water shall be used to produce a water velocity that is capable of entraining and removing debris in all portions of the piping system. This requires simultaneous operation of all fixtures on a common branch or main in order to produce a flushing velocity of approximately 4 fps through all portions of the piping system. In the event that this is impossible due to size of system, the Contracting Officer (or the designated representative) shall specify the number of fixtures to be operated during flushing. Contractor shall provide adequate personnel to monitor the flushing operation and to ensure that drain lines are unobstructed in order to prevent flooding of the facility. Contractor shall be responsible for any flood damage resulting from flushing of the system. Flushing shall be continued until entrained dirt and other foreign materials have been removed and until discharge water shows no discoloration. All faucets and drinking water fountains, to include any device considered as an end point device by NSF/ANSI 61, Section 9, shall be flushed a minimum of 0.25 gallons per 24 hour period, ten times over a 14 day period.

3.9.3.2 After Flushing

System shall be drained at low points. Strainer screens shall be removed, cleaned, and replaced. After flushing and cleaning, systems shall be prepared for testing by immediately filling water piping with clean, fresh potable water. Any stoppage, discoloration, or other damage to the finish, furnishings, or parts of the building due to the Contractor's failure to properly clean the piping system shall be repaired by the Contractor. When the system flushing is complete, the hot-water system shall be adjusted for uniform circulation. Flushing devices and automatic control systems shall be adjusted for proper operation according to manufacturer's instructions. Comply with ASHRAE 90.1 - IP for minimum efficiency requirements. Unless more stringent local requirements exist, lead levels shall not exceed

limits established by 40 CFR 141.80 (c)(1). The water supply to the building shall be tested separately to ensure that any lead contamination found during potable water system testing is due to work being performed inside the building.

3.9.4 Operational Test

Upon completion of flushing and prior to disinfection procedures, the Contractor shall subject the plumbing system to operating tests to demonstrate satisfactory installation, connections, adjustments, and functional and operational efficiency. Such operating tests shall cover a period of not less than 8 hours for each system and shall include the following information in a report with conclusion as to the adequacy of the system:

a. Time, date, and duration of test.

b. Water pressures at the most remote and the highest fixtures.

c. Operation of each fixture and fixture trim.

d. Operation of each valve, hydrant, and faucet.

e. Pump suction and discharge pressures.

f. Temperature of each domestic hot-water supply.

g. Operation of each floor drain by flooding with water.

h. Operation of each vacuum breaker and backflow preventer.

3.9.5 Disinfection

After all system components are provided and operational tests are complete, the entire domestic hot- and cold-water distribution system shall be disinfected. Before introducing disinfecting chlorination material, entire system shall be flushed with potable water until any entrained dirt and other foreign materials have been removed.

Water chlorination procedure shall be in accordance with AWWA C651 and AWWA C652 as modified and supplemented by this specification. The chlorinating material shall be hypochlorites or liquid chlorine. The chlorinating material shall be fed into the water piping system at a constant rate at a concentration of at least 50 parts per million (ppm). Feed a properly adjusted hypochlorite solution injected into the system with a hypochlorinator, or inject liquid chlorine into the system through a solution-feed chlorinator and booster pump until the entire system is completely filled.

Test the chlorine residual level in the water at 6 hour intervals for a continuous period of 24 hours. If at the end of a 6 hour interval, the chlorine residual has dropped to less than 25 ppm, flush the piping including tanks with potable water, and repeat the above chlorination procedures. During the chlorination period, each valve and faucet shall be opened and closed several times.

After the second 24 hour period, verify that no less than 25 ppm chlorine residual remains in the treated system. The 24 hour chlorination procedure must be repeated until no less than 25 ppm

chlorine residual remains in the treated system.

Upon the specified verification, the system including tanks shall then be flushed with potable water until the residual chlorine level is reduced to less than one part per million. During the flushing period, each valve and faucet shall be opened and closed several times.

Take addition samples of water in disinfected containers, for bacterial examination, at locations specified by the Contracting Officer Test these samples for total coliform organisms (coliform bacteria, fecal coliform, streptococcal, and other bacteria) in accordance with EPA SM 9223 or AWWA 10084. The testing method used shall be EPA approved for drinking water systems and shall comply with applicable local and state requirements.

Disinfection shall be repeated until bacterial tests indicate the absence of coliform organisms (zero mean coliform density per 100 milliliters) in the samples for at least 2 full days. The system will not be accepted until satisfactory bacteriological results have been obtained.

3.10 WASTE MANAGEMENT

Place materials defined as hazardous or toxic waste in designated containers. Return solvent and oil soaked rags for contaminant recovery and laundering or for proper disposal. Close and seal tightly partly used sealant and adhesive containers and store in protected, well-ventilated, fire-safe area at moderate temperature. Place used sealant and adhesive tubes and containers in areas designated for hazardous waste. Separate copper and ferrous pipe waste in accordance with the Waste Management Plan and place in designated areas for reuse.

3.11 POSTED INSTRUCTIONS

Framed instructions under glass or in laminated plastic, including wiring and control diagrams showing the complete layout of the entire system, shall be posted where directed. Condensed operating instructions explaining preventive maintenance procedures, methods of checking the system for normal safe operation, and procedures for safely starting and stopping the system shall be prepared in typed form, framed as specified above for the wiring and control diagrams and posted beside the diagrams. The framed instructions shall be posted before acceptance testing of the systems.

3.12 PERFORMANCE OF WATER HEATING EQUIPMENT

Standard rating condition terms are as follows:

EF = Energy factor, minimum overall efficiency.

ET = Minimum thermal efficiency with 70 degrees F delta T.

SL = Standby loss is maximum (Btu/h) based on a 70 degrees F temperature difference between stored water and ambient requirements.

V = Rated volume in gallons

Q = Nameplate input rate in kW (Btu/h)

3.12.1 Storage Water Heaters

3.12.1.1 Electric

a. Storage capacity of 60 gallons shall have a minimum energy factor (EF) of 0.93 or higher per FEMP requirements.

3.12.2 Unfired Hot Water Storage

All volumes and inputs: shall meet or exceed R-12.5.

3.13 TABLES

TABLE I

PIPE AND FITTING MATERIALS FOR DRAINAGE, WASTE, AND VENT PIPING SYSTEMS

Item #	Pipe and Fitting Materials	SERVICE A	SERVICE B	SERVICE C	SERVICE D	SERVICE E	SERVICE F
1	Cast iron soil pipe and fittings, hub and spigot, ASTM A74 with compression gaskets. Pipe and fittings shall be marked with the CISPI trademark.	X	X	X	X	X	
2	Cast iron soil pipe and fittings hubless, CISPI 301 and ASTM A888. Pipe and fittings shall be marked with the CISPI trademark.		X		X		
3	Cast iron drainage fittings, threaded, ASME B16.12 for use with Item 10	X		X	X		
4	Cast iron screwed fittings (threaded) ASME B16.4 for use with Item 10				X		
5	Malleable-iron threaded fittings, galvanized ASME B16.3 for use with Item 10				X		
6	Seamless red brass pipe, ASTM B43				X		

TABLE I

PIPE AND FITTING MATERIALS FOR DRAINAGE, WASTE, AND VENT PIPING SYSTEMS

Item #	Pipe and Fitting Materials	SERVICE A	SERVICE B	SERVICE C	SERVICE D	SERVICE E	SERVICE F
7	Bronzed flanged fittings, ASME B16.24 for use with Items 11 and 14				X		
8	Cast copper alloy solder joint pressure fittings, ASME B16.18 for use with Item 14				X		
9	Seamless copper pipe, ASTM B42						X
10	Cast bronze threaded fittings, ASME B16.15				X		
11	Copper drainage tube, (DWV), ASTM B306	X*	X	X*	X		
12	Wrought copper and wrought alloy solder-joint drainage fittings. ASME B16.29	X	X	X	X		
13	Cast copper alloy solder joint drainage fittings, DWV, ASME B16.23	X	X	X	X		
14	Polyvinyl Chloride plastic drain, waste and vent pipe and fittings, ASTM D2665, ASTM F891, (Sch 40) ASTM F1760		X		X		X
15	High-silicon content cast iron pipe and fittings (hub and spigot, and mechanical joint), ASTM A518/A518M		X			X	X

TABLE I

PIPE AND FITTING MATERIALS FOR DRAINAGE, WASTE, AND VENT PIPING SYSTEMS

Item #	Pipe and Fitting Materials	SERVICE A	SERVICE B	SERVICE C	SERVICE D	SERVICE E	SERVICE F

SERVICE:
- A - Underground Building Soil, Waste and Storm Drain
- B - Aboveground Soil, Waste, Drain In Buildings
- C - Underground Vent
- D - Aboveground Vent
- E - Interior Rainwater Conductors Aboveground
- F - Corrosive Waste And Vent Above And Belowground
- * - Hard Temper

TABLE II

PIPE AND FITTING MATERIALS FOR PRESSURE PIPING SYSTEMS

Item #	Pipe and Fitting Materials	SERVICE A	SERVICE B	SERVICE C	SERVICE D
1	Seamless copper pipe, ASTM B42	X	X		X
2	Seamless copper water tube, ASTM B88, ASTM B88M	X**	X**	X**	X***
3	Cast bronze threaded fittings, ASME B16.15 for use with Item 1	X	X		X
4	Wrought copper and bronze solder-joint pressure fittings, ASME B16.22 for use with Items 1 and 2	X	X		X
5	Cast copper alloy solder-joint pressure fittings, ASME B16.18 for use with Item 2	X	X		X

TABLE II

PIPE AND FITTING MATERIALS FOR PRESSURE PIPING SYSTEMS

Item #	Pipe and Fitting Materials	SERVICE A	SERVICE B	SERVICE C	SERVICE D

A - Cold Water Service Aboveground
B - Hot and Cold Water Distribution
180 degrees F Maximum Aboveground
C - Compressed Air Lubricated
D - Cold Water Service Belowground
Indicated types are minimum wall thicknesses.
** - Type L - Hard
*** - Type K - Hard temper with brazed joints only or type K-soft temper without joints in or under floors
**** - In or under slab floors only brazed joints

TABLE III

STANDARD RATING CONDITIONS AND MINIMUM PERFORMANCE RATINGS FOR WATER HEATING EQUIPMENT

FUEL	STORAGE CAPACITY GALLONS	INPUT RATING	TEST PROCEDURE	REQUIRED PERFORMANCE
A. STORAGE WATER HEATERS				
Elect.	60 max.		10 CFR 430	EF = 0.93
Elect.	60 min.		10 CFR 430	EF = 0.91
Elect.	20 min.	12 kW max.	10 CFR 430	EF = 0.93-0.00132V minimum
Elect.	20 min.	12 kW max.	ANSI Z21.10.3 (Addenda B)	SL = 20+35x(V^^1/2) maximum
C. Instantaneous Water Heater				
Gas	None	11.5kW max.	None	2.5 GPM@100-140 degrees

TERMS:

EF = Energy factor, minimum overall efficiency.
ET = Minimum thermal efficiency with 70 degrees F delta T.
SL = Standby loss is maximum Btu/h based on a 70 degree F temperature difference between stored water and ambient requirements.
V = Rated storage volume in gallons
Q = Nameplate input rate in Btu/h

-- End of Section --

THIS PAGE HAS BEEN INTENTIONALLY LEFT BLANK

SECTION 22 08 00.00 22

COMMISSIONING OF PLUMBING SYSTEMS
10/13

PART 1 GENERAL

1.1 REFERENCES

The publications listed below form a part of this specification to the extent referenced. The publications are referred to within the text by the basic designation only.

ASSOCIATED AIR BALANCE COUNCIL (AABC)

ACG Commissioning Guideline (2005) Commissioning Guideline

NATIONAL ENVIRONMENTAL BALANCING BUREAU (NEBB)

NEBB Commissioning Standard (2009) Procedural Standards for Whole Building Systems Commissioning of New Construction; 3rd Edition

1.2 SUMMARY

The requirements of this section apply to all sections of Division 22. Refer to Division 1 Section 01 91 13.00 22 GENERAL COMMISSIONING REQUIREMENTS FOR CONSTRUCTION for general commissioning requirements applicable to the entire project.

This Section includes Commissioning process requirements for plumbing systems, assemblies, components and equipment to ensure that the work has been completed as specified and that systems are functioning in the manner as described herein, and as specified in the system operating criteria for this project.

a. Commissioning will commence according to the approved construction schedule, after plumbing system rough-in, and after the preliminary inspection punchlist items and commissioning deficiencies are completed by the Contractor and his subcontractors.

b. Construction phase commissioning process shall include the following:

1. Step One: Installation Verification

2. Step Two: System Startup

3. Step Three: Functional Performance Testing

The plumbing commissioning process includes the following tasks:

a. Testing and startup of plumbing equipment and systems.

b. Plumbing equipment and system verification checks.

c. Assistance in functional performance testing to verify equipment and system performance.

d. Provide qualified personnel to assist in commissioning tests, including seasonal testing.

e. Complete and endorse construction phase checklists provided by Commissioning Authority (CxA) to assure equipment and systems are fully operational and ready for functional performance testing.

f. Provide equipment, materials, and labor necessary to correct deficiencies found during commissioning process and to fulfill contract and warranty requirements.

g. Provide operation and maintenance information and record drawings to Commissioning Authority for review verification and organization, prior to distribution.

h. Provide assistance to CxA to develop, edit, and document system operation descriptions.

i. Provide training for systems specified in this Section, coordinated with the CxA.

The commissioning process will also be used to develop test protocol and record the associated test data in an effort to advance the building plumbing systems from a state of substantial completion to a full dynamic operation.

The commissioning process is also intended to assist the Government's operating and maintenance staff in the training and familiarization with new plumbing systems and equipment. The Commissioning Plan and final Commissioning Report should also serve as tools to reduce post-occupancy critical systems operational difficulty or failure. Operational staff training is essential to the commission process and will run concurrently with Steps One through Three referenced above.

The commissioning required by this section is intended to supplement the inspection, testing, and training requirements contained in the technical sections and to consolidate the reports required by those sections. Duplication of the inspection, testing and training required by the technical sections is not required. This section does include additional commissioning requirements.

1.3 DEFINITIONS

Refer to Division 1 Section 01 91 13.00 22 GENERAL COMMISSIONING REQUIREMENTS FOR CONSTRUCTION, Article "Definitions" for definintions applicable to this section.

1.4 COMMISSIONING SUBMITTAL REQUIREMENTS

Commissioning Authority (CxA) shall prepare Commissioning Plan, Prefunctional Checklists, Functional Performance Test (FPT) procedures, narrative descriptions of the design intent for each of the systems identified, and the Commissioning Report, and execute and document results.

a. Contractor shall provide CxA with documentation required for Commissioning Work. At minimum, documentation shall include: detailed start-up procedures, full sequences of operation, Operating and Maintenance data and performance data, control drawings, and details of Government-contracted tests.

b. Contractor shall submit to CxA the manufacturers' installation and checkout materials actually shipped inside equipment and actual field checkout sheet forms used by factory or field technicians.

c. Contractor shall review and approve other relative documentation for impact on FPT's of the systems:

1. Verify manufacturer's installation instructions are followed by completing the Prefunctional checklists for all plumbing equipment.

2. Factory Performance Test Reports: Review and compile all factory performance data to assure that the data is complete prior to executing the FPT's.

3. Completed equipment Start-up certification forms along with the manufacturer's field or factory performance and Start-up test documentation: Subcontractor performing the test will review the documentation prior to commencing with the scheduled FPT's. Government may require that system one-line diagrams and applicable Specification Section(s) be attached to the FPT documentation.

4. Operating and Maintenance (O&M) information per requirements of the Technical Specifications and Division 01 requirements: To validate adequacy and completeness of the FPT, the Contractor shall ensure that the O&M manual content, marked-up record Drawings and Specifications, component submittal drawings, and other pertinent documents are available at the Project Site for review.

1.5 SYSTEMS TO BE COMMISSIONED

The following systems shall be commissioned as part of this project:

a. Domestic Hot Water Systems: Domestic water heaters, hot water circulating pumps and motors, controls, fans/motors.

1.6 COMMISSIONING RESPONSIBILITIES

1.6.1 Plumbing Installer Commissioning Responsibilities

a. Attend commissioning meetings.

b. Provide instructions and demonstrations for Government personnel.

c. Ensure subcontractors perform assigned commissioning responsibilities as specified herein.

d. Ensure participation of equipment manufacturers in appropriate startup, testing, and training activities when required by individual equipment specifications and/or the commissioning plan.

e. Develop startup and initial checkout plan using manufacturer's startup procedures and prefunctional (construction) checklists for equipment and systems to be commissioned.

f. During verification check and startup process, execute Plumbing related portions of checklists for equipment and systems to be commissioned.

g. Perform and document completed installation checklists, startup checklists and reports, and system operational checkout procedures, providing copy to CxA.

h. Where specified in the technical sections, provide manufacturer's representatives to execute starting of equipment. Ensure representatives are available and present during agreed upon schedules and are in attendance for duration to complete tests, adjustments and problem-solving.

i. Coordinate with equipment manufacturers to determine specific requirements to maintain validity of warranties.

j. Provide personnel to assist CxA during equipment or system verification checks and functional performance tests.

k. Prior to functional performance tests, review test procedures to ensure feasibility, safety and equipment protection and provide necessary written alarm limits to be used during tests.

l. Prior to startup, inspect, check, and verify correct and complete installation of equipment and system components for verification checks included in commissioning plan. When deficient or incomplete work is discovered, ensure corrective action is taken and re-check until equipment or system is ready for startup.

m. Provide factory supervised startup services for equipment and systems where specified. Coordinate work with manufacturer and CxA.

n. Perform verification checks and startup on equipment and systems as specified.

o. Assist CxA in performing functional performance tests on equipment and systems as specified.

p. Perform operation and maintenance training sessions scheduled by contractor in accordance with the Commissioning Plan.

q. Conduct Plumbing system orientation and inspection.

1.7 SEQUENCING AND SCHEDULING

Begin the work described in this Section only after all work required in related Sections has been successfully completed, and all test and inspection reports and operation and maintenance manuals required in these Sections have been submitted and approved. Pre-Functional (Construction) Checklists shall be performed for the installation of plumbing equipment, at appropriate times during the construction phase of the Contract.

PART 2 PRODUCTS

2.1 GENERAL

All materials shall meet or exceed all applicable referenced standards, federal, state and local requirements, and conform to codes and ordinances of authorities having jurisdiction.

2.2 TEST EQUIPMENT

a. Provide all specialized tools, test equipment and instruments required to execute Start-up, checkout, and testing of equipment.

b. All specialized tools, test equipment, and instruments required to execute Start-up, checkout, and testing of equipment shall be of sufficient quality and accuracy to test and/or measure system performance within specified tolerances. A testing laboratory must have calibrated test equipment within the previous twelve (12) months. Calibration shall be NIST traceable, and shall be in accordance with the requirements of the NEBB Commissioning Standard or the ACG Commissioning Guideline. Contractor must calibrate test equipment and instruments according to manufacturer's recommended intervals and whenever the test equipment is dropped or damaged. Calibration tags must be affixed to the test equipment or certificates readily available.

PART 3 EXECUTION

3.1 GENERAL

The Contractor and his Subcontractors shall be responsible for performing procedures presented in the specifications, and as indicated on the contract drawings and as detailed in the Functional Performance Tests (FPT) procedures. Members of the designated Commissioning Team shall witness various portions of the commissioning process. Responsibilities for these activities are listed in the following paragraphs. Commissioning Team members shall sign-off on appropriate sections after verifying installation, operation, or documentation. Final sign-off shall be by the Government and the Commissioning Authority (CxA).

Any test ports, gauges, test equipment, etc., needed to accomplish the functional performance tests shall be provided by the Contractor and his Subcontractors.

The Contractor shall provide to the Commissioning Team documentation of calibration of controls. Documentation shall include dates, setpoints, calibration coefficients, control loop verification, and other data required to verify system check-out. Documentation shall be dated and initialed by field engineer or technician performing the work.

3.2 COMMISSIONING PLAN

The commissioning plan will be developed by the third party CxA and submitted to the Government for approval. The approved commissioning plan outlines the organization, scheduling, team members, and documentation pertaining to the overall commissioning process.

3.3 CONSTRUCTION CHECKLIST

a. A checklist shall be developed by the CxA for each component of commissioned equipment and systems to ensure that the specified equipment has been provided, is properly installed, and has been initially started and checked out adequately in preparation for full operation and functional testing (e.g., belt tension, fluids topped, labels affixed, gages in place, sensors calibrated, voltage balanced, rotation correct, etc.)

b. The CxA for this project shall develop 'Prefunctional (Construction)

Checklists' for this project, which shall be reviewed and approved by the Government; and then provided to, and completed by the Contractor and his sub-contractors to ensure that all equipment and systems are installed properly; have been started up preliminarily, and are ready for commissioning and performance verification testing.

3.4 FUNCTIONAL PERFORMANCE TEST (FPT) PROCEDURES

The FPT procedures at a minimum shall consist of the following sections:

a. Narrative Description: Provide a narrative description of the design intent of each of the plumbing systems to be tested, their intended modes and sequences of operation.

b. Testing Prerequisites: Provide verification and documentation that primary mechanical, electrical, and controls systems that support or interact with the system that the FPT has been prepared for are completed, tested and operational.

c. Installation Verification: Provide verification that the system installation is completed and is ready for commissioning.

d. Commencement of Functional Performance Testing: Record the date and time of the start of system commissioning.

e. System Condition Prior to Starting Performance Testing: Record the current set points and parameters of the system at the start of commissioning.

f. Functional Performance Test: This section shall provide the following:

    1. Sequential steps required to set parameters and conditions required to test components and functions throughout intended ranges of operation.

    2. Full range of checks and tests carried out to determine if electric and pneumatic connections, components, subsystems, systems and interfaces between systems function in accordance with the contract documents and design intents.

    3. All modes and sequences of control operations, interlocks and conditional control responses and specified responses to abnormal emergency conditions.

g. End of Functional Performance Test: Record the date and time of the completion of system commissioning. Include the items in the final commissioning report.

h. Field Notes: Provide a copy of the notes and remarks made and documented during system commissioning.

i. List systems modifications, not required by the Contract Documents, but provided by the Subcontractor. List other questions regarding such system modifications.

j. List problems discovered during Commissioning that were corrected.

k. List problems discovered during Commissioning that were not corrected.

l. List recommended party that should take action on these 'uncorrected' problems.

The CxA for this project shall develop 'Functional Performance Test' (FPT) procedures for this project, which shall be reviewed and approved by the Government; and then provided to, and completed by the Contractor and his sub-contractors, under the supervision of the CxA, to ensure that all equipment and systems are installed properly; have been started up preliminarily, and are reading for commissioning and performance verification testing.

3.5 OPERATIONAL AND MAINTENANCE STAFF TRAINING

System narrative descriptions will be prepared by the CxA and supported by flow diagrams, one line diagrams, and appropriate specification sections for major systems to be commissioned. The CxA will coordinate "system description" meetings with members of facility management and maintenance department groups to review system description documentation. The meetings will provide an overview of major system features, components, and arrangements.

The Contractor, his sub-contractors and associated manufacturer's representatives shall provide the required training to the Government's operational staff after the system description meetings have occurred. These Contractor training sessions for Government personnel shall provide a more detailed analogy of systems operation and maintenance.

3.6 DOCUMENTATION

The Contractor and his installing subcontractors shall be responsible for collection of pertinent data during system installation, inspection and checkout; during system start-up; and during functional performance testing. The Contractor and his subcontractors shall submit to the CxA documentation of all construction inspections, startup procedures and results, as well as any tests performed prior to and after system start-up. Documentation shall also include the equipment manufacturer's start-up procedures as reviewed and approved by Commissioning Team, including startup reports for equipment and systems conducted by a factory-certified technician or engineer, as specified in the Division 22 Sections for this project.

Provide a title sheet for each section and list the following:

a. Section Title and Specification Section Name and Number requiring this submittal.

b. Project name, project number, and address.

c. Contractor and subcontractor names, addresses, and phone numbers.

d. Name, title, signature, and date of person making the submittal.

e. Table of Contents for each Section.

f. Name of Command, a blank line for signature, and the name and title of person accepting the submittal, and the date accepted by signature.

g. Name, address, and phone number of CxA. Include a blank line for signature; and date of person accepting the submittal.

Provide a Table of Contents for multiple submittals. List each submittal and page number. Number each page, centered on the bottom in sequential numerical order.

3.6.1 STEP ONE - INSTALLATION VERIFICATION

General Commissioning Responsibilities:

a. Before system start-up begins, the Commissioning Team shall conduct a final installation verification audit. The Contractor and his subcontractors shall be responsible for completion of work including change orders and punch list items to the Government's satisfaction. The audit shall include, but not be limited to, checking of:

    1. Piping specialties including balance, control, and isolation valves.

    2. Control sensor types and location.

    3. Identification of piping, valves, equipment, controls, etc.

    4. Major equipment, pumps, valves, starters, gauges, thermometers, etc.

    5. Documentation of prestart-up tests performed, including manufacturer's factory tests.

b. If work is found to be incomplete, incorrect, or non-functional, the Contractor and his subcontractors shall correct the deficiencies before system start-up work proceeds.

3.6.2 STEP TWO - SYSTEM START-UP

General Commissioning Responsibilities: A start-up plan shall be developed and submitted to the Government by the Contractor and his installing subcontractors, for approval. Start-up plan shall include the following:

a. Flushing and cleaning of pipe.

b. Check and replace filters, strainers, and screens, as required.

c. Review control valve min-max, and operating positions.

d. Electrical startup procedures and tests for equipment.

e. Completion of required piping pressure tests.

f. Verification of completion of equipment operating controls, including safeties and interlocks.

g. Verify that chemical treatment systems are as specified, and are operational.

h. Verify that copies of manufacturer's factory tests are available. Verify that manufacturer's startup tests and reports are complete and that all recommendations by the startup engineer have been addressed and completed.

The start-up plan will be reviewed and approved by the Government. After approval is complete, a prestart-up inspection shall be performed by the CxA, and by designated members of the Commissioning Team. The Contractor and his installing subcontractors shall commence with system start-up after approval has been given to start-up plan and the prestart-up inspection is completed.

a. Designated members of the Commissioning Team shall witness system start-ups and list system and equipment deficiencies noted during start-up. The Contractor and his subcontractors shall take corrective action on system deficiencies noted and shall demonstrate satisfactory and suitable system operation to the CxA and to the Commissioning Team.

b. Designated systems requiring test and balance work shall have this activity commence after systems have successfully completed start-up. System and equipment deficiencies observed during this activity shall be noted and corrected.

3.6.3 STEP THREE - FUNCTIONAL PERFORMANCE TESTING

General Commissioning Responsibilities:

a. Functional Performance Testing begins after operational testing, adjusting, and balancing of the systems have been completed by the Contractor and his subcontractors. Ideally, the Commissioning training for Government operators and maintenance personnel, including the description of the systems, as well as the hands-on training sessions will also have been completed.

b. The objective of the Functional Performance Testing is to advance the building systems from a state of substantial completion to full dynamic operation in accordance with the specified design requirements and design intent.

c. To attain this objective the CxA will develop individual systems testing protocols which, when implemented by the Contractor/subcontractors will allow the Commissioning Team to observe, evaluate, identify deficiencies, recommend modifications, tune, and document the systems and systems equipment performance over a range of load and functional levels.

d. Functional Performance tests for the systems to be commissioned will be defined in the Commissioning Plan. These tests are intended to be conclusive but may require minor modifications as system operation dictates.

-- End of Section --

THIS PAGE HAS BEEN INTENTIONALLY LEFT BLANK

SECTION 23 00 00

AIR SUPPLY, DISTRIBUTION, VENTILATION, AND EXHAUST SYSTEMS
08/10

PART 1 GENERAL

1.1 REFERENCES

The publications listed below form a part of this specification to the extent referenced. The publications are referred to within the text by the basic designation only.

AIR MOVEMENT AND CONTROL ASSOCIATION INTERNATIONAL (AMCA)

AMCA 201	(2002; R 2011) Fans and Systems
AMCA 210	(2007) Laboratory Methods of Testing Fans for Aerodynamic Performance Rating
AMCA 300	(2008) Reverberant Room Method for Sound Testing of Fans
AMCA 301	(1990; INT 2007) Methods for Calculating Fan Sound Ratings from Laboratory Test Data

AIR-CONDITIONING, HEATING AND REFRIGERATION INSTITUTE (AHRI)

AHRI 260 I-P	(2012) Sound Rating of Ducted Air Moving and Conditioning Equipment
AHRI 410	(2001; Addendum 1 2002; Addendum 2 2005; Addendum 3 2011) Forced-Circulation Air-Cooling and Air-Heating Coils
AHRI 430	(2009) Central-Station Air-Handling Units
AHRI Guideline D	(1996) Application and Installation of Central Station Air-Handling Units

AMERICAN BEARING MANUFACTURERS ASSOCIATION (ABMA)

ABMA 11	(1990; R 2008) Load Ratings and Fatigue Life for Roller Bearings
ABMA 9	(1990; ERTA 2012; S 2013) Load Ratings and Fatigue Life for Ball Bearings

AMERICAN SOCIETY OF HEATING, REFRIGERATING AND AIR-CONDITIONING ENGINEERS (ASHRAE)

ASHRAE 52.2	(2012; Errata 2013) Method of Testing General Ventilation Air-Cleaning Devices for Removal Efficiency by Particle Size
ASHRAE 62.1	(2010; Errata 2011; INT 3 2012; INT 4 2012; INT 5 2013) Ventilation for

	Acceptable Indoor Air Quality
ASHRAE 68	(1997) Laboratory Method of Testing to Determine the Sound Power In a Duct
ASHRAE 70	(2006; R 2011) Method of Testing for Rating the Performance of Air Outlets and Inlets
ASHRAE 84	(2013; Addenda A 2013) Method of Testing Air-to-Air Heat Exchangers

ASME INTERNATIONAL (ASME)

ASME A13.1	(2007; R 2013) Scheme for the Identification of Piping Systems

ASTM INTERNATIONAL (ASTM)

ASTM A123/A123M	(2013) Standard Specification for Zinc (Hot-Dip Galvanized) Coatings on Iron and Steel Products
ASTM A167	(2011) Standard Specification for Stainless and Heat-Resisting Chromium-Nickel Steel Plate, Sheet, and Strip
ASTM A53/A53M	(2012) Standard Specification for Pipe, Steel, Black and Hot-Dipped, Zinc-Coated, Welded and Seamless
ASTM A924/A924M	(2014) Standard Specification for General Requirements for Steel Sheet, Metallic-Coated by the Hot-Dip Process
ASTM B117	(2011) Standard Practice for Operating Salt Spray (Fog) Apparatus
ASTM B766	(1986; R 2008) Standard Specification for Electrodeposited Coatings of Cadmium
ASTM C1071	(2012) Standard Specification for Fibrous Glass Duct Lining Insulation (Thermal and Sound Absorbing Material)
ASTM C553	(2013) Standard Specification for Mineral Fiber Blanket Thermal Insulation for Commercial and Industrial Applications
ASTM C916	(1985; R 2007) Standard Specification for Adhesives for Duct Thermal Insulation
ASTM D1654	(2008) Evaluation of Painted or Coated Specimens Subjected to Corrosive Environments
ASTM D3359	(2009; E 2010; R 2010) Measuring Adhesion by Tape Test

ASTM D520	(2000; R 2011) Zinc Dust Pigment
ASTM E2016	(2011) Standard Specification for Industrial Woven Wire Cloth
ASTM E84	(2015b) Standard Test Method for Surface Burning Characteristics of Building Materials

NATIONAL ELECTRICAL MANUFACTURERS ASSOCIATION (NEMA)

NEMA MG 1	(2011; Errata 2012) Motors and Generators
NEMA MG 10	(2001; R 2007) Energy Management Guide for Selection and Use of Fixed Frequency Medium AC Squirrel-Cage Polyphase Induction Motors
NEMA MG 11	(1977; R 2012) Energy Management Guide for Selection and Use of Single Phase Motors

NATIONAL FIRE PROTECTION ASSOCIATION (NFPA)

NFPA 70	(2014; AMD 1 2013; Errata 1 2013; AMD 2 2013; Errata 2 2013; AMD 3 2014; Errata 3-4 2014; AMD 4-6 2014) National Electrical Code
NFPA 701	(2010) Standard Methods of Fire Tests for Flame Propagation of Textiles and Films
NFPA 90A	(2015) Standard for the Installation of Air Conditioning and Ventilating Systems

SHEET METAL AND AIR CONDITIONING CONTRACTORS' NATIONAL ASSOCIATION (SMACNA)

SMACNA 1966	(2005) HVAC Duct Construction Standards Metal and Flexible, 3rd Edition
SMACNA 1981	(2008) Seismic Restraint Manual Guidelines for Mechanical Systems, 3rd Edition

U.S. NATIONAL ARCHIVES AND RECORDS ADMINISTRATION (NARA)

40 CFR 82	Protection of Stratospheric Ozone

UNDERWRITERS LABORATORIES (UL)

UL 181	(2013) Factory-Made Air Ducts and Air Connectors
UL 1995	(2011) Heating and Cooling Equipment
UL 586	(2009) Standard for High-Efficiency Particulate, Air Filter Units
UL 6	(2007; reprint Nov 2010) Electrical Rigid

	Metal Conduit-Steel
UL 705	(2004; Reprint Dec 2013) Standard for Power Ventilators
UL 723	(2008; Reprint Aug 2013) Test for Surface Burning Characteristics of Building Materials
UL 900	(2004; Reprint Feb 2012) Standard for Air Filter Units
UL Bld Mat Dir	(2012) Building Materials Directory
UL Electrical Constructn	(2012) Electrical Construction Equipment Directory

1.2 SYSTEM DESCRIPTION

Furnish ductwork, piping offsets, fittings, and accessories as required to provide a complete installation. Coordinate the work of the different trades to avoid interference between piping, equipment, structural, and electrical work. Provide complete, in place, all necessary offsets in piping and ductwork, and all fittings, and other components, required to install the work as indicated and specified.

1.2.1 Mechanical Equipment Identification

The number of charts and diagrams shall be equal to or greater than the number of mechanical equipment rooms. Where more than one chart or diagram per space is required, mount these in edge pivoted, swinging leaf, extruded aluminum frame holders which open to 170 degrees.

1.2.1.1 Charts

Provide chart listing of equipment by designation numbers and capacities such as flow rates, pressure and temperature differences, heating and cooling capacities, horsepower, pipe sizes, and voltage and current characteristics.

1.2.2 Service Labeling

Label equipment, including fans, air handlers, terminal units, etc. with labels made of self-sticking, plastic film designed for permanent installation. Labels shall be in accordance with the typical examples below:

SERVICE	LABEL AND TAG DESIGNATION
Air handling unit Number	AHU - _____
Exhaust Fan Number	EF -
VRV Unit	AC-

Identify similar services with different temperatures or pressures. Where pressures could exceed 125 pounds per square inch, gage, include the

maximum system pressure in the label. Label and arrow piping in accordance with the following:

a. Each point of entry and exit of pipe passing through walls.

b. Each change in direction, i.e., elbows, tees.

c. In congested or hidden areas and at all access panels at each point required to clarify service or indicated hazard.

d. In long straight runs, locate labels at distances within eyesight of each other not to exceed 75 feet. All labels shall be visible and legible from the primary service and operating area.

For Bare or Insulated Pipes

for Outside Diameters of	Lettering
1/2 thru 1-3/8 inch	1/2 inch
1-1/2 thru 2-3/8 inch	3/4 inch
2-1/2 inch and larger	1-1/4 inch

1.2.3 Color Coding

Color coding of all piping systems shall be in accordance with ASME A13.1 .

1.3 SUBMITTALS

Government approval is required for submittals with a "G" designation; submittals not having a "G" designation are for Contractor Quality Control approval. Submit the following in accordance with Section 01 33 00 SUBMITTAL PROCEDURES:

SD-03 Product Data

Metallic Flexible Duct
Insulated Nonmetallic Flexible Duct Runouts
Duct Connectors
Duct Access Doors; G
Manual Balancing Dampers; G
Sound Attenuation Equipment
Acoustical Duct Liner
Diffusers
Registers and Grilles
Air Vents, Penthouses, and Goosenecks
In-Line Centrifugal Fans
Air Handling Units; G
Energy Recovery Devices; G

SD-08 Manufacturer's Instructions

Manufacturer's Installation Instructions
Operation and Maintenance Training

SD-10 Operation and Maintenance Data

Operation and Maintenance Manuals; G
Manual Balancing Dampers; G
In-Line Centrifugal Fans; G
Air Handling Units; G
Energy Recovery Devices; G

1.4 QUALITY ASSURANCE

Except as otherwise specified, approval of materials and equipment is based on manufacturer's published data.

a. Where materials and equipment are specified to conform to the standards of the Underwriters Laboratories, the label of or listing with reexamination in UL Bld Mat Dir, and UL 6 is acceptable as sufficient evidence that the items conform to Underwriters Laboratories requirements. In lieu of such label or listing, submit a written certificate from any nationally recognized testing agency, adequately equipped and competent to perform such services, stating that the items have been tested and that the units conform to the specified requirements. Outline methods of testing used by the specified agencies.

b. Where materials or equipment are specified to be constructed or tested, or both, in accordance with the standards of the ASTM International (ASTM), the ASME International (ASME), or other standards, a manufacturer's certificate of compliance of each item is acceptable as proof of compliance.

c. Conformance to such agency requirements does not relieve the item from compliance with other requirements of these specifications.

1.4.1 Prevention of Corrosion

Protect metallic materials against corrosion. Manufacturer shall provide rust-inhibiting treatment and standard finish for the equipment enclosures. Do not use aluminum in contact with earth, and where connected to dissimilar metal. Protect aluminum by approved fittings, barrier material, or treatment. Ferrous parts such as anchors, bolts, braces, boxes, bodies, clamps, fittings, guards, nuts, pins, rods, shims, thimbles, washers, and miscellaneous parts not of corrosion-resistant steel or nonferrous materials shall be hot-dip galvanized in accordance with ASTM A123/A123M for exterior locations and cadmium-plated in conformance with ASTM B766 for interior locations.

1.4.2 Asbestos Prohibition

Do not use asbestos and asbestos-containing products.

1.4.3 Ozone Depleting Substances Used as Refrigerants

Minimize releases of Ozone Depleting Substances (ODS) during repair, maintenance, servicing or disposal of appliances containing ODS's by complying with all applicable sections of 40 CFR 82 Part 82 Subpart F. Any person conducting repair, maintenance, servicing or disposal of appliances owned by NASA shall comply with the following:

a. Do not knowingly vent or otherwise release into the environment, Class I or Class II substances used as a refrigerant.

b. Do not open appliances without meeting the requirements of 40 CFR 82 Part 82.156 Subpart F, regarding required practices for evacuation and collection of refrigerant, and 40 CFR 82 Part 82.158 Subpart F, regarding standards of recycling and recovery equipment.

c. Only persons who comply with 40 CFR 82 Part 82.161 Subpart F, regarding technician certification, can conduct work on appliances containing refrigerant.

In addition, provide copies of all applicable certifications to the Contracting Officer at least 14 calendar days prior to initiating maintenance, repair, servicing, dismantling or disposal of appliances, including:

a. Proof of Technician Certification

b. Proof of Equipment Certification for recovery or recycling equipment.

c. Proof of availability of certified recovery or recycling equipment.

1.4.4 Use of Ozone Depleting Substances, Other than Refrigerants

The use of Class I or Class II ODS's listed as nonessential in 40 CFR 82 Part 82.66 Subpart C is prohibited. These prohibited materials and uses include:

a. Any plastic party spray streamer or noise horn which is propelled by a chlorofluorocarbon

b. Any cleaning fluid for electronic and photographic equipment which contains a chlorofluorocarbon; including liquid packaging, solvent wipes, solvent sprays, and gas sprays.

c. Any plastic flexible or packaging foam product which is manufactured with or contains a chlorofluorocarbon, including, open cell foam, open cell rigid polyurethane poured foam, closed cell extruded polystyrene sheet foam, closed cell polyethylene foam and closed cell polypropylene foam except for flexible or packaging foam used in coaxial cabling.

d. Any aerosol product or other pressurized dispenser which contains a chlorofluorocarbon, except for those listed in 40 CFR 82 Part 82.66 Subpart C.

Request a waiver if a facility requirement dictates that a prohibited material is necessary to achieve project goals. Submit the waiver request in writing to the Contracting Officer. The waiver will be evaluated and dispositioned.

1.5 DELIVERY, STORAGE, AND HANDLING

Protect stored equipment at the jobsite from the weather, humidity and temperature variations, dirt and dust, or other contaminants. Additionally, cap or plug all pipes until installed.

PART 2 PRODUCTS

2.1 STANDARD PRODUCTS

Except for the fabricated duct, plenums and casings specified in paragraphs

"Metal Ductwork" and "Plenums and Casings for Field-Fabricated Units", provide components and equipment that are standard products of manufacturers regularly engaged in the manufacturing of products that are of a similar material, design and workmanship. This requirement applies to all equipment, including diffusers, registers, fire dampers, and balancing dampers.

a. Standard products are defined as components and equipment that have been in satisfactory commercial or industrial use in similar applications of similar size for at least two years before bid opening.

b. Prior to this two year period, these standard products shall have been sold on the commercial market using advertisements in manufacturers' catalogs or brochures. These manufacturers' catalogs, or brochures shall have been copyrighted documents or have been identified with a manufacturer's document number.

c. Provide equipment items that are supported by a service organization. Where applicable, provide equipment that is an ENERGY STAR Qualified product or a Federal Energy Management Program (FEMP) designated product.

2.2 IDENTIFICATION PLATES

In addition to standard manufacturer's identification plates, provide engraved laminated phenolic identification plates for each piece of mechanical equipment. Identification plates are to designate the function of the equipment. Submit designation with the shop drawings. Identification plates shall be three layers, black-white-black, engraved to show white letters on black background. Letters shall be upper case. Identification plates 1-1/2-inches high and smaller shall be 1/16-inch thick, with engraved lettering 1/8-inch high; identification plates larger than 1-1/2-inches high shall be 1/8-inch thick, with engraved lettering of suitable height. Identification plates 1-1/2-inches high and larger shall have beveled edges. Install identification plates using a compatible adhesive.

2.3 EQUIPMENT GUARDS AND ACCESS

Fully enclose or guard belts, pulleys, chains, gears, couplings, projecting setscrews, keys, and other rotating parts exposed to personnel contact according to OSHA requirements. Properly guard or cover with insulation of a type specified, high temperature equipment and piping exposed to contact by personnel or where it creates a potential fire hazard. The requirements for ladders, and guardrails are specified in Section 05 50 13 MISCELLANEOUS METAL FABRICATIONS.

2.4 ELECTRICAL WORK

a. Provide motors, controllers, integral disconnects, contactors, and controls with their respective pieces of equipment, except controllers indicated as part of motor control centers. Provide electrical equipment, including motors and wiring, as specified in Section 26 20 00 INTERIOR DISTRIBUTION SYSTEM. Provide manual or automatic control and protective or signal devices required for the operation specified and control wiring required for controls and devices specified, but not shown. For packaged equipment, include manufacturer provided controllers with the required monitors and timed restart.

b. For single-phase motors, provide high-efficiency type, fractional-horsepower alternating-current motors, including motors that are part of a system, in accordance with NEMA MG 11. Integral size motors shall be the premium efficiency type in accordance with NEMA MG 1.

c. For polyphase motors, provide squirrel-cage medium induction motors, including motors that are part of a system , and that meet the efficiency ratings for premium efficiency motors in accordance with NEMA MG 1. Select premium efficiency polyphase motors in accordance with NEMA MG 10.

d. Provide motors in accordance with NEMA MG 1 and of sufficient size to drive the load at the specified capacity without exceeding the nameplate rating of the motor. Provide motors rated for continuous duty with the enclosure specified. Provide motor duty that allows for maximum frequency start-stop operation and minimum encountered interval between start and stop. Provide motor torque capable of accelerating the connected load within 20 seconds with 80 percent of the rated voltage maintained at motor terminals during one starting period. Provide motor starters complete with thermal overload protection and other necessary appurtenances. Fit motor bearings with grease supply fittings and grease relief to outside of the enclosure.

e. Where two-speed or variable-speed motors are indicated, solid-state variable-speed controllers are allowed to accomplish the same function. Use solid-state variable-speed controllers for motors rated 10 hp or less and adjustable frequency drives for larger motors. Provide variable frequency drives for motors as specified in Section 23 09 23.13 22 BACNet DIRECT DIGITAL CONTROL SYSTEMS FOR HVAC.

2.5 ANCHOR BOLTS

Provide anchor bolts for equipment placed on concrete equipment pads or on concrete slabs. Bolts to be of the size and number recommended by the equipment manufacturer and located by means of suitable templates. Installation of anchor bolts shall not degrade the surrounding concrete.

2.6 SEISMIC ANCHORAGE

Anchor equipment in accordance with applicable seismic criteria for the area and as defined in SMACNA 1981

2.7 PAINTING

Paint equipment units in accordance with approved equipment manufacturer's standards unless specified otherwise. Field retouch only if approved. Otherwise, return equipment to the factory for refinishing.

2.8 INDOOR AIR QUALITY

Provide equipment and components that comply with the requirements of ASHRAE 62.1 unless more stringent requirements are specified herein.

2.9 DUCT SYSTEMS

2.9.1 Metal Ductwork

Provide metal ductwork construction, including all fittings and components, that complies with SMACNA 1966, as supplemented and modified by this

specification.

a. Ductwork shall be constructed meeting the requirements for the duct system static pressure specified in APPENDIX D of Section 23 05 93 TESTING, ADJUSTING AND BALANCING FOR HVAC.

b. Provide ductwork that meets the requirements of Seal Class A.

c. Provide sealants that conform to fire hazard classification specified in Section 23 07 00 THERMAL INSULATION FOR MECHANICAL SYSTEMS and are suitable for the range of air distribution and ambient temperatures to which it is exposed. Do not use pressure sensitive tape as a sealant.

2.9.1.1 Metallic Flexible Duct

a. Provide duct that conforms to UL 181 and NFPA 90A with factory-applied insulation, vapor barrier, and end connections. Provide duct assembly that does not exceed 25 for flame spread and 50 for smoke developed. Provide ducts designed for working pressures of 2 inches water gauge positive and 1.5 inches water gauge negative. Provide flexible round duct length that does not exceed 5 feet. Secure connections by applying adhesive for 2 inches over rigid duct, apply flexible duct 2 inches over rigid duct, apply metal clamp, and provide minimum of three No. 8 sheet metal screws through clamp and rigid duct.

b. Inner duct core: Provide interlocking spiral or helically corrugated flexible core constructed of zinc-coated steel, aluminum, or stainless steel; or constructed of inner liner of continuous galvanized spring steel wire helix fused to continuous, fire-retardant, flexible vapor barrier film, inner duct core.

c. Insulation: Provide inner duct core that is insulated with mineral fiber blanket type flexible insulation, minimum of 1 inch thick. Provide insulation covered on exterior with manufacturer's standard fire retardant vapor barrier jacket for flexible round duct.

2.9.1.2 Insulated Nonmetallic Flexible Duct Runouts

Use flexible duct runouts only where indicated. Runout length is indicated on the drawings, and is not to exceed 5 feet. Provide runouts that are preinsulated, factory fabricated, and that comply with NFPA 90A and UL 181. Provide either field or factory applied vapor barrier. Provide not less than 20 ounce glass fabric duct connectors coated on both sides with neoprene. Where coil induction or high velocity units are supplied with vertical air inlets, use a streamlined, vaned and mitered elbow transition piece for connection to the flexible duct or hose. Provide a die-stamped elbow and not a flexible connector as the last elbow to these units other than the vertical air inlet type. Insulated flexible connectors are allowed as runouts. Provide insulated material and vapor barrier that conform to the requirements of Section 23 07 00 THERMAL INSULATION FOR MECHANICAL SYSTEMS. Do not expose the insulation material surface to the air stream.

2.9.1.3 General Service Duct Connectors

Provide a flexible duct connector approximately 6 inches in width where sheet metal connections are made to fans or where ducts of dissimilar metals are connected. For round/oval ducts, secure the flexible material by stainless steel or zinc-coated, iron clinch-type draw bands. For

rectangular ducts, install the flexible material locked to metal collars using normal duct construction methods. Provide a composite connector system that complies with NFPA 701 and is classified as "flame-retardent fabrics" in UL Bld Mat Dir.

2.9.2 Duct Access Doors

Provide hinged access doors conforming to SMACNA 1966 in ductwork and plenums where indicated and at all air flow measuring primaries, automatic dampers, fire dampers, coils, thermostats, turning vanes, and other apparatus requiring service and inspection in the duct system. Provide access doors upstream and downstream of air flow measuring primaries and heating and cooling coils. Provide doors that are a minimum 15 by 18 inches, unless otherwise shown. Where duct size does not accommodate this size door, make the doors as large as practicable. Equip doors 24 by 24 inches or larger with fasteners operable from inside and outside the duct. Use insulated type doors in insulated ducts.

2.9.3 Manual Balancing Dampers

a. Furnish manual balancing dampers with accessible operating mechanisms. Use chromium plated operators (with all exposed edges rounded) in finished portions of the building. Provide manual volume control dampers that are operated by locking-type quadrant operators.

b. Unless otherwise indicated, provide opposed blade type multileaf dampers with maximum blade width of 12 inches. Provide access doors or panels for all concealed damper operators and locking setscrews. Provide access doors or panels in hard ceilings, partitions and walls for access to all concealed damper operators and damper locking setscrews. Coordinate location of doors or panels with other affected contractors.

c. Provide stand-off mounting brackets, bases, or adapters not less than the thickness of the insulation when the locking-type quadrant operators for dampers are installed on ducts to be thermally insulated, to provide clearance between the duct surface and the operator. Stand-off mounting items shall be integral with the operator or standard accessory of the damper manufacturer.

2.9.3.1 Square or Rectangular Dampers

2.9.3.1.1 Duct Height 12 inches and Less

2.9.3.1.1.1 Frames

Width	Height	Galvanized Steel Thickness	Length
Maximum 19 inches	Maximum 12 inches	Minimum 20 gauge	Minimum 3 inches
More than 19 inches	Maximum 12 inches	Minimum 16 gauge	Minimum 3 inches

2.9.3.1.1.2 Single Leaf Blades

Width	Height	Galvanized Steel Thickness	Length
Maximum 19 inches	Maximum 12 inches	Minimum 20 gauge	Minimum 3 inches
More than 19 inches	Maximum 12 inches	Minimum 16 gauge	Minimum 3 inches

2.9.3.1.1.3 Blade Axles

To support the blades of round dampers, provide galvanized steel shafts supporting the blade the entire duct diameter frame-to-frame. Axle shafts shall extend through standoff bracket and hand quadrant.

Width	Height	Material	Square Shaft
Maximum 19 inches	Maximum 12 inches	Galvanized Steel	Minimum 3/8 inch
More than 19 inches	Maximum 12 inches	Galvanized Steel	Minimum 1/2 inch

2.9.3.1.1.4 Axle Bearings

Support the shaft on each end at the frames with shaft bearings. Shaft bearings configuration shall be a pressed fit to provide a tight joint between blade shaft and damper frame.

Width	Height	Material
Maximum 19 inches	Maximum 12 inches	solid nylon, or equivalent solid plastic, or oil-impregnated bronze
More than 19 inches	Maximum 12 inches	oil-impregnated bronze

2.9.3.1.1.5 Control Shaft/Hand Quadrant

Provide dampers with accessible locking-type control shaft/hand quadrant operators.

Provide stand-off mounting brackets, bases, or adapters for the locking-type quadrant operators on dampers installed on ducts to be thermally insulated. Stand-off distance shall be a minimum of 2 inches off the metal duct surface. Stand-off mounting items shall be integral with the operator or standard accessory of the damper manufacturer.

2.9.3.1.1.6 Finish

Mill Galvanized

2.9.3.1.2 Duct Height Greater than 12 inches

2.9.3.1.2.1 Dampers

Provide dampers with multi-leaf opposed-type blades.

2.9.3.1.2.2 Frames

Maximum 48 inches in height; maximum 48 inches in width; minimum of 16 gauge galvanized steel,
minimum of 5 inches long.

2.9.3.1.2.3 Blades

Minimum of 16 gauge galvanized steel; 6 inch nominal width.

2.9.3.1.2.4 Blade Axles

To support the blades of round dampers, provide galvanized square steel shafts supporting the blade the entire duct diameter frame-to-frame. Axle shafts shall extend through standoff bracket and hand quadrant.

2.9.3.1.2.5 Axle Bearings

Support the shaft on each end at the frames with shaft bearings constructed of oil-impregnated bronze, or solid nylon, or a solid plastic equivalent to nylon. Shaft bearings configuration shall be a pressed fit to provide a tight joint between blade shaft and damper frame.

2.9.3.1.2.6 Blade Actuator

Minimum 1/2 inch diameter galvanized steel.

2.9.3.1.2.7 Blade Actuator Linkage

Mill Galvanized steel bar and crank plate with stainless steel pivots.

2.9.3.1.2.8 Control Shaft/Hand Quadrant

Provide dampers with accessible locking-type control shaft/hand quadrant operators.

Provide stand-off mounting brackets, bases, or adapters for the locking-type quadrant operators on dampers installed on ducts to be thermally insulated. Stand-off distance shall be a minimum of 2 inches off the metal duct surface. Stand-off mounting items shall be integral with the operator or standard accessory of the damper manufacturer.

2.9.3.1.2.9 Finish

Mill Galvanized

2.9.3.2 Round Dampers

2.9.3.2.1 Frames

Size	Galvanized Steel Thickness	Length
4 to 20 inches	Minimum 20 gauge	Minimum 6 inches
22 to 30 inches	Minimum 20 gauge	Minimum 10 inches
32 to 40 inches	Minimum 16 gauge	Minimum 10 inches

2.9.3.2.2 Blades

Size	Galvanized Steel Thickness
4 to 20 inches	Minimum 20 gauge
22 to 30 inches	Minimum 16 gauge
32 to 40 inches	Minimum 10 gauge

2.9.3.2.3 Blade Axles

To support the blades of round dampers, provide galvanized steel shafts supporting the blade the entire duct diameter frame-to-frame. Axle shafts shall extend through standoff bracket and hand quadrant.

Size	Shaft Size and Shape
4 to 20 inches	Minimum 3/8 inch square
22 to 30 inches	Minimum 1/2 inch square
32 to 40 inches	Minimum 3/4 inch square

2.9.3.2.4 Axle Bearings

Support the shaft on each end at the frames with shaft bearings constructed of oil-impregnated bronze, or solid nylon, or a solid plastic equivalent to nylon. Shaft bearings configuration shall be a pressed fit to provide a tight joint between blade shaft and damper frame.

Size	Material
4 to 20 inches	solid nylon, or equivalent solid plastic, or oil-impregnated bronze
22 to 30 inches	solid nylon, or equivalent solid plastic, or oil-impregnated bronze
32 to 40 inches	oil-impregnated bronze, or stainless steel sleeve bearing

2.9.3.2.5 Control Shaft/Hand Quadrant

Provide dampers with accessible locking-type control shaft/hand quadrant operators.

Provide stand-off mounting brackets, bases, or adapters for the locking-type quadrant operators on dampers installed on ducts to be thermally insulated. Stand-off distance shall be a minimum of 2 inches off the metal duct surface. Stand-off mounting items shall be integral with the operator or standard accessory of the damper manufacturer.

2.9.3.2.6 Finish

Mill Galvanized

2.9.4 Automatic Balancing Dampers

Provide dampers as specified in paragraph SUPPLEMENTAL COMPONENTS/SERVICES, subparagraph CONTROLS.

2.9.5 Sound Attenuation Equipment

2.9.5.1 System with total pressure of 4 Inch Water Gauge and Lower

Use sound attenuators only where indicated. Provide factory fabricated sound attenuators that are constructed of galvanized steel sheets. Provide attenuator with outer casing that is not less than 22 gauge. Provide fibrous glass acoustical fill. Provide net sound reduction indicated. Obtain values on a test unit not less than 12 by 15 inches outside dimensions made by a certified nationally recognized independent acoustical laboratory. Provide air flow capacity as indicated or required. Provide pressure drop through the attenuator that does not exceed the value indicated, or that is not in excess of 15 percent of the total external static pressure of the air handling system, whichever is less. Acoustically test attenuators with metal duct inlet and outlet sections while under the rated air flow conditions. Include with the noise reduction data the effects of flanking paths and vibration transmission. Construct sound attenuators to be airtight when operating at the internal static pressure indicated or specified for the duct system, but in no case less than 2 inch water gauge.

2.9.5.2 Acoustical Duct Liner

Use fibrous glass designed or flexible elastomeric duct liner for lining ductwork and conforming to the requirements of ASTM C1071, Type I and II. Provide uniform density, graduated density, or dual density liner composition, as standard with the manufacturer. Provide not less than 1 inch thick coated lining. Where acoustical duct liner is used, provide the

thermal equivalent of the insulation specified in Section 23 07 00 THERMAL INSULATION FOR MECHANICAL SYSTEMS for liner or combination of liner and insulation applied to the exterior of the ductwork. Increase duct sizes shown to compensate for the thickness of the lining used.

2.9.6 Diffusers, Registers, and Grilles

Provide factory-fabricated units of corrosion-resistant steel or aluminum that distribute the specified quantity of air evenly over space intended without causing noticeable drafts, air movement faster than 50 fpm in occupied zone, or dead spots anywhere in the conditioned area. Provide outlets for diffusion, spread, throw, and noise level as required for specified performance. Certify performance according to ASHRAE 70. Provide sound rated and certified inlets and outlets according to ASHRAE 70. Provide sound power level as indicated. Where the inlet and outlet openings are located less than 7 feet above the floor, protect them by a grille or screen according to NFPA 90A.

2.9.6.1 Diffusers

Provide diffuser types indicated. Furnish ceiling mounted units with anti-smudge devices, unless the diffuser unit minimizes ceiling smudging through design features. Provide diffusers with air deflectors of the type indicated. Provide air handling troffers or combination light and ceiling diffusers conforming to the requirements of UL Electrical Constructn for the interchangeable use as cooled or heated air supply diffusers or return air units. Install ceiling mounted units with rims tight against ceiling. Provide sponge rubber gaskets between ceiling and surface mounted diffusers for air leakage control. Provide suitable trim for flush mounted diffusers. For connecting the duct to diffuser, provide duct collar that is airtight and does not interfere with volume controller. Provide return or exhaust units that are similar to supply diffusers.

2.9.6.2 Registers and Grilles

Provide units that are four-way directional-control type, except provide return and exhaust registers that are fixed horizontal or vertical louver type similar in appearance to the supply register face. Furnish registers with sponge-rubber gasket between flanges and wall or ceiling. Install wall supply registers at least 6 inches below the ceiling unless otherwise indicated. Locate return and exhaust registers 6 inches above the floor unless otherwise indicated. Achieve four-way directional control by a grille face which can be rotated in 4 positions or by adjustment of horizontal and vertical vanes. Provide grilles as specified for registers, without volume control damper.

2.9.6.3 Registers

Double-deflection supply registers. Provide manufacturer-furnished volume dampers. Provide exhaust and return registers as specified for supply registers, except provide exhaust and return registers that have a single set of nondirectional face bars or vanes having the same appearance as the supply registers.

2.9.7 Air Vents, Penthouses, and Goosenecks

Provide factory fabricated air vents, penthouses, and goosenecks from galvanized steel or aluminum sheets with galvanized or aluminum structural shapes. Provide sheet metal thickness, reinforcement, and fabrication that

conform to SMACNA 1966. Accurately fit and secure louver blades to frames. Fold or bead edges of louver blades for rigidity and baffle these edges to exclude driving rain. Provide air vents, penthouses, and goosenecks with bird screen.

2.9.8 Bird Screens and Frames

Provide bird screens that conform to ASTM E2016, No. 2 mesh, aluminum or stainless steel. Provide "medium-light" rated aluminum screens. Provide "light" rated stainless steel screens. Provide removable type frames fabricated from either stainless steel or extruded aluminum.

2.10 AIR SYSTEMS EQUIPMENT

2.10.1 Fans

Test and rate fans according to AMCA 210. Calculate system effect on air moving devices in accordance with AMCA 201 where installed ductwork differs from that indicated on drawings. Install air moving devices to minimize fan system effect. Where system effect is unavoidable, determine the most effective way to accommodate the inefficiencies caused by system effect on the installed air moving device. The sound power level of the fans shall not exceed 85 dBA when tested according to AMCA 300 and rated in accordance with AMCA 301. Provide all fans with an AMCA seal. Connect fans to the motors either directly or indirectly with V-belt drive. Use V-belt drives designed for not less than 150 percent of the connected driving capacity. Provide variable pitch motor sheaves for 15 hp and below, and fixed pitch as defined by AHRI Guideline D (A fixed-pitch sheave is provided on both the fan shaft and the motor shaft. This is a non-adjustable speed drive.). Select variable pitch sheaves to drive the fan at a speed which can produce the specified capacity when set at the approximate midpoint of the sheave adjustment. When fixed pitch sheaves are furnished, provide a replaceable sheave when needed to achieve system air balance. Provide motors for V-belt drives with adjustable rails or bases. Provide removable metal guards for all exposed V-belt drives, and provide speed-test openings at the center of all rotating shafts. Provide fans with personnel screens or guards on both suction and supply ends, except that the screens need not be provided, unless otherwise indicated, where ducts are connected to the fan. Provide fan and motor assemblies with vibration-isolation supports or mountings as indicated. Use vibration-isolation units that are standard products with published loading ratings. Select each fan to produce the capacity required at the fan static pressure indicated. Provide sound power level as indicated. Obtain the sound power level values according to AMCA 300. Provide standard AMCA arrangement, rotation, and discharge as indicated. Provide power ventilators that conform to UL 705 and have a UL label.

2.10.1.1 In-Line Centrifugal Fans

Provide in-line fans with centrifugal backward inclined blades, stationary discharge conversion vanes, internal and external belt guards, and adjustable motor mounts. Mount fans in a welded tubular casing. Provide a fan that axially flows the air in and out. Streamline inlets with conversion vanes to eliminate turbulence and provide smooth discharge air flow. Enclose and isolate fan bearings and drive shafts from the air stream. Provide precision, self aligning ball or roller type fan bearings that are sealed against dust and dirt and are permanently lubricated. Provide L50 rated bearing life at not less than 200,000 hours as defined by ABMA 9 and ABMA 11. Provide motors with totally enclosed enclosure.

Provide magnetic motor starters across-the-line with general-purpose enclosures. Provide remote manual switch with pilot indicating light where indicated

2.10.2 Coils

Provide fin-and-tube type coils constructed of seamless copper tubes and aluminum or copper fins mechanically bonded or soldered to the tubes. Provide copper tube wall thickness that is a minimum of inches. Provide aluminum fins that are 0.0055 inch minimum thickness. Provide copper fins that are 0.0045 inch minimum thickness. Provide casing and tube support sheets that are not lighter than 16 gauge galvanized steel, formed to provide structural strength. When required, provide multiple tube supports to prevent tube sag. Test each coil at the factory under water at not less than 400 psi air pressure and make suitable for 200 psi working pressure and 300 degrees F operating temperature unless otherwise stated. Mount coils for counterflow service. Rate and certify coils to meet the requirements of AHRI 410.

2.10.2.1 Electric Heating Coil

Provide an electric duct heater coil in accordance with UL 1995 and NFPA 70. Provide duct- or unit-mounted coil. Provide nickel chromium resistor, single stage, strip type coil. Provide coil with a built-in or surface-mounted high-limit thermostat interlocked electrically so that the coil cannot be energized unless the fan is energized. Provide galvanized steel or aluminum coil casing and support brackets. Mount coil to eliminate noise from expansion and contraction and for complete accessibility for service.

2.10.2.2 Corrosion Protection for Coastal Installations

Provide corrosion protection for all exterior HVAC equipment, including air handling units, heat exchanger coil surfaces, equipment casings, air cooled condensing units, air conditioning units that are exposed to the weather.Corrosion protection shall meet or exceed the requirements of a 3000 hoursalt spray test in accordance with ASTM B117. The specified capacities onthe plans and specifications shall be the capacities after the requiredcorrosion protection coatings are applied. This corrosion protection isrequired on HVAC equipment within buildings that are subject to the outsideweather conditions. Specifically, equipment requiring protection isdefined as the first HVAC equipment (excluding louvers) met by the outsideair in the supply air ductwork system. Provide manufacturer;s standardoff-the-shelf anti-corrosion options for "coastal" or "sea coast"installations that meet or exceed the4 requirements stated above.

2.10.3 Air Filters

List air filters according to requirements of UL 900, except list high efficiency particulate air filters of 99.97 percent efficiency by the DOP Test method under the Label Service to meet the requirements of UL 586.

2.10.3.1 Extended Surface Pleated Panel Filters

Provide 4 inch depth, disposable type filters for the size indicated with a MERV of 13 when tested according to ASHRAE 52.2. Provide initial resistance at 500 fpm that does not exceed 0.36 inches water gauge. Provide UL Class 2 filters, and nonwoven cotton and synthetic fiber mat media. Attach a wire support grid bonded to the media to a moisture

resistant fiberboard frame. Bond all four edges of the filter media to the inside of the frame to prevent air bypass and increase rigidity.

2.10.3.2 Holding Frames

Fabricate frames from not lighter than 16 gauge sheet steel with rust-inhibitor coating. Equip each holding frame with suitable filter holding devices. Provide gasketed holding frame seats. Make all joints airtight.

2.10.3.3 Filter Gauges

Provide dial type filter gauges, diaphragm actuated draft for all filter stations, including those filters which are furnished as integral parts of factory fabricated air handling units. Gauges shall be at least 3-7/8 inches in diameter, with white dials with black figures, and graduated in 0.01 inch of water, with a minimum range of 1 inch of water beyond the specified final resistance for the filter bank on which each gauge is applied. Provide each gauge with a screw operated zero adjustment and two static pressure tips with integral compression fittings, two molded plastic vent valves, two 5 foot minimum lengths of 1/4 inch diameter vinyl tubing, and all hardware and accessories for gauge mounting.

2.11 AIR HANDLING UNITS

2.11.1 Factory-Fabricated Air Handling Units

Provide single-zone draw-through type units as indicated. Units shall include fans, coils, airtight insulated casing, prefilters, secondary filter sections, and diffuser sections where indicated, direct drives, belt guards for externally mounted motors, access sections where indicated, combination sectional filter-mixing box, vibration-isolators, and appurtenances required for specified operation. Provide vibration isolators as indicated. Physical dimensions of each air handling unit shall be suitable to fit space allotted to the unit with the capacity indicated. Provide air handling unit that is rated in accordance with AHRI 430 and AHRI certified for cooling.

2.11.1.1 Casings

Provide the following:

a. Casing sections 2 inch double wall type , constructed of a minimum 18 gauge galvanized steel, or 18 gauge corrosion-resisting sheet steel conforming to ASTM A167, Type 304. Design and construct casing with an integral insulated structural galvanized steel frame such that exterior panels are non-load bearing.

b. Individually removable exterior panels with standard tools. Removal shall not affect the structural integrity of the unit. Furnish casings with access sections, according to paragraph AIR HANDLING UNITS, inspection doors, and access doors, all capable of opening a minimum of 90 degrees, as indicated.

c. Insulated, fully gasketed, double-wall type inspection and access doors, of a minimum 18 gauge outer and 20 gauge inner panels made of either galvanized steel or corrosion-resisting sheet steel conforming to ASTM A167, Type 304. Doors shall be rigid and provided with heavy duty hinges and latches. Inspection doors shall be a minimum 12 inches

wide by 12 inches high. Access doors shall be a minimum 24 inches wide, the full height of the unit casing or a minimum of 6 foot, whichever is less. Install a minimum 8 by 8 inches sealed glass window suitable for the intended application, in all access doors.

d. Double-wall insulated type drain pan (thickness equal to exterior casing) constructed of 16 gauge corrosion resisting sheet steel conforming to ASTM A167, Type 304, conforming to ASHRAE 62.1. Construct drain pans water tight, treated to prevent corrosion, and designed for positive condensate drainage. When 2 or more cooling coils are used, with one stacked above the other, condensate from the upper coils shall not flow across the face of lower coils. Provide intermediate drain pans or condensate collection channels and downspouts, as required to carry condensate to the unit drain pan out of the air stream and without moisture carryover. Construct drain pan to allow for easy visual inspection, including underneath the coil without removal of the coil and to allow complete and easy physical cleaning of the pan underneath the coil without removal of the coil. Coils shall be individually removable from the casing.

e. Casing insulation that conforms to NFPA 90A. Single-wall casing sections handling conditioned air shall be insulated with not less than 1 inch thick, 1-1/2 pound density coated fibrous glass material having a thermal conductivity not greater than 0.23 Btu/hr-sf-F. Double-wall casing sections handling conditioned air shall be insulated with not less than 2 inches of the same insulation specified for single-wall casings. Foil-faced insulation is not an acceptable substitute for use with double wall casing. Double wall insulation shall be completely sealed by inner and outer panels.

f. Factory applied fibrous glass insulation that conforms to ASTM C1071, except that the minimum thickness and density requirements do not apply, and that meets the requirements of NFPA 90A. Make air handling unit casing insulation uniform over the entire casing. Foil-faced insulation is not an acceptable substitute for use on double-wall access doors and inspections doors and casing sections.

g. Duct liner material, coating, and adhesive that conforms to fire-hazard requirements specified in Section 23 07 00 THERMAL INSULATION FOR MECHANICAL SYSTEMS. Protect exposed insulation edges and joints where insulation panels are butted with a metal nosing strip or coat to meet erosion resistance requirements of ASTM C1071.

h. A latched and hinged inspection door, in the fan and coil sections. Plus additional inspection doors, access doors and access sections where indicated.

2.11.1.2 Heating and Cooling Coils

Provide coils as specified in paragraph AIR SYSTEMS EQUIPMENT.

2.11.1.3 Air Filters

Provide air filters as specified in paragraph AIR SYSTEMS EQUIPMENT for types and thickness indicated.

2.11.1.4 Fans

Provide the following:

a. Fans that are double-inlet, centrifugal type with each fan in a separate scroll. Dynamically balance fans and shafts prior to installation into air handling unit, then after it has been installed in the air handling unit, statically and dynamically balance the entire fan assembly. Mount fans on steel shafts, accurately ground and finished.

b. Fan bearings that are sealed against dust and dirt and are precision self-aligning ball or roller type, with L50 rated bearing life at not less than 200,000 hours as defined by ABMA 9 and ABMA 11. Bearings shall be permanently lubricated or lubricated type with lubrication fittings readily accessible at the drive side of the unit. Support bearings by structural shapes, or die formed sheet structural members, or support plates securely attached to the unit casing. Do not fasten bearings directly to the unit sheet metal casing. Furnish fans and scrolls with coating indicated.

c. Fans that are driven by a unit-mounted, or a floor-mounted motor connected to fans by V-belt drive complete with belt guard for externally mounted motors. Furnish belt guards that are the three-sided enclosed type with solid or expanded metal face. Belt drives shall be designed for not less than a 1.3 service factor based on motor nameplate rating.

d. Motor starters of magnetic type with general-purpose enclosure. Select unit fan or fans to produce the required capacity at the fan static pressure with sound power level as indicated. Obtain the sound power level values according to AMCA 300, ASHRAE 68, or AHRI 260 I-P.

2.11.1.5 Access Sections and Filter/Mixing Boxes

Provide access sections where indicated and furnish with access doors as shown. Construct access sections and filter/mixing boxes in a manner identical to the remainder of the unit casing and equip with access doors. Design mixing boxes to minimize air stratification and to promote thorough mixing of the air streams.

2.12 ENERGY RECOVERY DEVICES

2.12.1 Rotary Wheel

Provide unit that is a factory fabricated and tested assembly for air-to-air energy recovery by transfer of sensible heat from exhaust air to supply air stream, with device performance according to ASHRAE 84 and that delivers an energy transfer effectiveness of not less than 70 percent with cross-contamination not in excess of 1.0 percent of exhaust airflow rate at system design differential pressure, including purging sector if provided with wheel. Provide exchange media that is chemically inert, moisture-resistant, fire-retardant, laminated, nonmetallic material which complies with NFPA 90A. Isolate exhaust and supply streams by seals which are static, field adjustable, and replaceable. Equip chain drive mechanisms with ratcheting torque limiter or slip-clutch protective device. Fabricate enclosure from galvanized steel and include provisions for maintenance access. Provide recovery control and rotation failure provisions as indicated.

2.12.2 Desiccant Wheel

Provide counterflow supply, regeneration airstreams, a rotary type dehumidifier designed for continuous operation, and extended surface type wheel structure in the axial flow direction with a geometry that allows for laminar flow over the operating range for minimum air pressure differentials. Provide the dehumidifier complete with a drive system utilizing a fractional-horsepower electric motor and speed reducer assembly driving the rotor. Include a slack-side tensioner for automatic take-up for belt-driven wheels. Provide an adsorbing type desiccant material. Apply the desiccant material to the wheel such that the entire surface is active as a desiccant and the desiccant material does not degrade or detach from the surface of the wheel which is fitted with full-face, low-friction contact seals on both sides to prevent cross leakage. Provide rotary structure that has underheat, overheat and rotation fault circuitry. The wheel assembly shall come with a warranty for a minimum of five years.

2.13 FACTORY PAINTING

Factory paint new equipment, which are not of galvanized construction. Paint with a corrosion resisting paint finish according to ASTM A123/A123M or ASTM A924/A924M. Clean, phosphatize and coat internal and external ferrous metal surfaces with a paint finish which has been tested according to ASTM B117, ASTM D1654, and ASTM D3359. Submit evidence of satisfactory paint performance for a minimum of 125 hours for units to be installed indoors and 3000 hours for units to be installed outdoors. Provide rating of failure at the scribe mark that is not less than 6, average creepage not greater than 1/8 inch. Provide rating of the inscribed area that is not less than 10, no failure. On units constructed of galvanized steel that have been welded, provide a final shop docket of zinc-rich protective paint on exterior surfaces of welds or welds that have burned through from the interior according to ASTM D520 Type I.

Factory painting that has been damaged prior to acceptance by the Contracting Officer shall be field painted in compliance with the requirements of paragraph FIELD PAINTING OF MECHANICAL EQUIPMENT.

2.14 SUPPLEMENTAL COMPONENTS/SERVICES

2.14.1 Refrigerant Piping

The requirements for refrigerant piping are specified in Section 23 23 00 REFRIGERANT PIPING.

2.14.2 Condensate Drain Lines

Provide and install condensate drainage for each item of equipment that generates condensate in accordance with Section 22 00 00 PLUMBING, GENERAL PURPOSE except as modified herein.

2.14.3 Backflow Preventers

The requirements for backflow preventers are specified in Section 22 00 00 PLUMBING, GENERAL PURPOSE.

2.14.4 Insulation

The requirements for shop and field applied insulation are specified in Section 23 07 00 THERMAL INSULATION FOR MECHANICAL SYSTEMS.

2.14.5 Controls

The requirements for controls are specified in Section 23 05 93 TESTING, ADJUSTING, AND BALANCING OF HVAC SYSTEMS and 23 09 23.13 22 BACnet DIRECT DIGITAL CONTROL SYSTEMS FOR HVAC.

PART 3 EXECUTION

3.1 EXAMINATION

After becoming familiar with all details of the work, verify all dimensions in the field, and advise the Contracting Officer of any discrepancy before performing the work.

3.2 INSTALLATION

a. Install materials and equipment in accordance with the requirements of the contract drawings and approved manufacturer's installation instructions. Accomplish installation by workers skilled in this type of work. Perform installation so that there is no degradation of the designed fire ratings of walls, partitions, ceilings, and floors.

b. No installation is permitted to block or otherwise impede access to any existing machine or system. Install all hinged doors to swing open a minimum of 120 degrees. Provide an area in front of all access doors that clears a minimum of 3 feet. In front of all access doors to electrical circuits, clear the area the minimum distance to energized circuits as specified in OSHA Standards, part 1910.333 (Electrical-Safety Related work practices)and an additional 3 feet.

c. Except as otherwise indicated, install emergency switches and alarms in conspicuous locations. Mount all indicators, to include gauges, meters, and alarms in order to be easily visible by people in the area.

3.2.1 Condensate Drain Lines

Provide water seals in the condensate drain from all units . Provide a depth of each seal of 2 inches plus the number of inches, measured in water gauge, of the total static pressure rating of the unit to which the drain is connected. Provide water seals that are constructed of 2 tees and an appropriate U-bend with the open end of each tee plugged. Provide pipe cap or plug cleanouts where indicated. Connect drains indicated to connect to the sanitary waste system using an indirect waste fitting. Insulate air conditioner drain lines as specified in Section 23 07 00 THERMAL INSULATION FOR MECHANICAL SYSTEMS.

3.2.2 Equipment and Installation

Provide frames and supports for tanks, compressors, pumps, valves, air handling units, fans, coils, dampers, and other similar items requiring supports. Floor mount or ceiling hang air handling units as indicated. Anchor and fasten as detailed. Set floor-mounted equipment on not less than 6 inch concrete pads or curbs doweled in place unless otherwise indicated. Make concrete foundations heavy enough to minimize the intensity of the vibrations transmitted to the piping, duct work and the surrounding structure, as recommended in writing by the equipment manufacturer. In lieu of a concrete pad foundation, build a concrete pedestal block with isolators placed between the pedestal block and the

floor. Make the concrete foundation or concrete pedestal block a mass not less than three times the weight of the components to be supported. Provide the lines connected to the pump mounted on pedestal blocks with flexible connectors. Submit foundation drawings as specified in paragraph DETAIL DRAWINGS. Provide concrete for foundations as specified in Section 03 30 00 CAST-IN-PLACE CONCRETE.

3.2.3 Access Panels

Install access panels for concealed valves, vents, controls, dampers, and items requiring inspection or maintenance of sufficient size, and locate them so that the concealed items are easily serviced and maintained or completely removed and replaced. Provide access panels as specified in Section 05 50 13 MISCELLANEOUS METAL FABRICATIONS.

3.2.4 Flexible Duct

Install pre-insulated flexible duct in accordance with the latest printed instructions of the manufacturer to ensure a vapor tight joint. Provide hangers, when required to suspend the duct, of the type recommended by the duct manufacturer and set at the intervals recommended.

3.2.5 Metal Ductwork

Install according to SMACNA 1966 unless otherwise indicated. Install duct supports for sheet metal ductwork according to SMACNA 1966, unless otherwise specified. Do not use friction beam clamps indicated in SMACNA 1966. Anchor risers on high velocity ducts in the center of the vertical run to allow ends of riser to move due to thermal expansion. Erect supports on the risers that allow free vertical movement of the duct. Attach supports only to structural framing members and concrete slabs. Do not anchor supports to metal decking unless a means is provided and approved for preventing the anchor from puncturing the metal decking. Where supports are required between structural framing members, provide suitable intermediate metal framing. Where C-clamps are used, provide retainer clips.

3.2.6 Acoustical Duct Lining

Apply lining in cut-to-size pieces attached to the interior of the duct with nonflammable fire resistant adhesive conforming to ASTM C916, Type I, NFPA 90A, UL 723, and ASTM E84. Provide top and bottom pieces that lap the side pieces and are secured with welded pins, adhered clips of metal, nylon, or high impact plastic, and speed washers or welding cup-head pins installed according to SMACNA 1966. Provide welded pins, cup-head pins, or adhered clips that do not distort the duct, burn through, nor mar the finish or the surface of the duct. Make pins and washers flush with the surfaces of the duct liner and seal all breaks and punctures of the duct liner coating with the nonflammable, fire resistant adhesive. Coat exposed edges of the liner at the duct ends and at other joints where the lining is subject to erosion with a heavy brush coat of the nonflammable, fire resistant adhesive, to prevent delamination of glass fibers. Apply duct liner to flat sheet metal prior to forming duct through the sheet metal brake. Additionally secure lining at the top and bottom surfaces of the duct by welded pins or adhered clips as specified for cut-to-size pieces. Other methods indicated in SMACNA 1966 to obtain proper installation of duct liners in sheet metal ducts, including adhesives and fasteners, are acceptable.

3.2.7 Dust Control

To prevent the accumulation of dust, debris and foreign material during construction, perform temporary dust control protection. Protect the distribution system (supply and return) with temporary seal-offs at all inlets and outlets at the end of each day's work. Keep temporary protection in place until system is ready for startup.

3.2.8 Insulation

Provide thickness and application of insulation materials for ductwork, piping, and equipment according to Section 23 07 00 THERMAL INSULATION FOR MECHANICAL SYSTEMS. Externally insulate outdoor air intake ducts and plenums up to the point where the outdoor air reaches the conditioning unit.

3.2.9 Duct Test Holes

Provide holes with closures or threaded holes with plugs in ducts and plenums as indicated or where necessary for the use of pitot tube in balancing the air system. Plug insulated duct at the duct surface, patched over with insulation and then marked to indicate location of test hole if needed for future use.

3.2.10 Power Transmission Components Adjustment

Test V-belts and sheaves for proper alignment and tension prior to operation and after 72 hours of operation at final speed. Uniformly load belts on drive side to prevent bouncing. Make alignment of direct driven couplings to within 50 percent of manufacturer's maximum allowable range of misalignment.

3.3 EQUIPMENT PADS

Provide equipment pads to the dimensions shown or, if not shown, to conform to the shape of each piece of equipment served with a minimum 3-inch margin around the equipment and supports. Allow equipment bases and foundations, when constructed of concrete or grout, to cure a minimum of 14 calendar days before being loaded.

3.4 CUTTING AND PATCHING

Install work in such a manner and at such time that a minimum of cutting and patching of the building structure is required. Make holes in exposed locations, in or through existing floors, by drilling and smooth by sanding. Use of a jackhammer is permitted only where specifically approved. Make holes through masonry walls to accommodate sleeves with an iron pipe masonry core saw.

3.5 CLEANING

Thoroughly clean surfaces of piping and equipment that have become covered with dirt, plaster, or other material during handling and construction before such surfaces are prepared for final finish painting or are enclosed within the building structure. Before final acceptance, clean mechanical equipment, including piping, ducting, and fixtures, and free from dirt, grease, and finger marks. When the work area is in an occupied space such as office, laboratory or warehouse protect all furniture and equipment from dirt and debris. Incorporate housekeeping for field construction work which leaves all furniture and equipment in the affected area free of

construction generated dust and debris; and, all floor surfaces vacuum-swept clean.

3.6 PENETRATIONS

Provide sleeves and prepared openings for duct mains, branches, and other penetrating items, and install during the construction of the surface to be penetrated. Cut sleeves flush with each surface. Place sleeves for round duct 15 inches and smaller. Build framed, prepared openings for round duct larger than 15 inches and square, rectangular or oval ducts. Sleeves and framed openings are also required where grilles, registers, and diffusers are installed at the openings. Provide one inch clearance between penetrating and penetrated surfaces except at grilles, registers, and diffusers. Pack spaces between sleeve or opening and duct or duct insulation with mineral fiber conforming with ASTM C553, Type 1, Class B-2.

3.6.1 Sleeves

Fabricate sleeves, except as otherwise specified or indicated, from 20 gauge thick mill galvanized sheet metal. Where sleeves are installed in bearing walls or partitions, provide black steel pipe conforming with ASTM A53/A53M, Schedule 20.

3.6.2 Framed Prepared Openings

Fabricate framed prepared openings from 20 gauge galvanized steel, unless otherwise indicated.

3.6.3 Insulation

Provide duct insulation in accordance with Section 23 07 00 THERMAL INSULATION FOR MECHANICAL SYSTEMS continuous through sleeves and prepared openings except firewall penetrations. Terminate duct insulation at fire dampers and flexible connections. For duct handling air at or below 60 degrees F, provide insulation continuous over the damper collar and retaining angle of fire dampers, which are exposed to unconditioned air.

3.6.4 Closure Collars

Provide closure collars of a minimum 4 inches wide, unless otherwise indicated, for exposed ducts and items on each side of penetrated surface, except where equipment is installed. Install collar tight against the surface and fit snugly around the duct or insulation. Grind sharp edges smooth to prevent damage to penetrating surface. Fabricate collars for round ducts 15 inches in diameter or less from 20 gauge galvanized steel. Fabricate collars for square and rectangular ducts, or round ducts with minimum dimension over 15 inches from 18 gauge galvanized steel. Fabricate collars for square and rectangular ducts with a maximum side of 15 inches or less from 20 gauge galvanized steel. Install collars with fasteners a maximum of 6 inches on center. Attach to collars a minimum of 4 fasteners where the opening is 12 inches in diameter or less, and a minimum of 8 fasteners where the opening is 20 inches in diameter or less.

3.6.5 Firestopping

Where ducts pass through fire-rated walls, fire partitions, and fire rated chase walls, seal the penetration with fire stopping materials as specified in Section 07 84 00 FIRESTOPPING.

3.7 FIELD PAINTING OF MECHANICAL EQUIPMENT

Clean, pretreat, prime and paint metal surfaces; except aluminum surfaces need not be painted. Apply coatings to clean dry surfaces. Clean the surfaces to remove dust, dirt, rust, oil and grease by wire brushing and solvent degreasing prior to application of paint, except clean to bare metal on metal surfaces subject to temperatures in excess of 120 degrees F. Where more than one coat of paint is specified, apply the second coat after the preceding coat is thoroughly dry. Lightly sand damaged painting and retouch before applying the succeeding coat. Provide aluminum or light gray finish coat.

3.7.1 Temperatures less than 120 degrees F

Immediately after cleaning, apply one coat of pretreatment primer applied to a minimum dry film thickness of 0.3 mil, one coat of primer applied to a minimum dry film thickness of one mil; and two coats of enamel applied to a minimum dry film thickness of one mil per coat to metal surfaces subject to temperatures less than 120 degrees F.

3.7.2 Temperatures between 120 and 400 degrees F

Apply two coats of 400 degrees F heat-resisting enamel applied to a total minimum thickness of two mils to metal surfaces subject to temperatures between 120 and 400 degrees F.

3.7.3 Temperatures greater than 400 degrees F

Apply two coats of 315 degrees C 600 degrees F heat-resisting paint applied to a total minimum dry film thickness of two mils to metal surfaces subject to temperatures greater than 400 degrees F.

3.7.4 Finish Painting

The requirements for finish painting of items only primed at the factory, and surfaces not specifically noted otherwise, are specified in Section 09 90 00 PAINTS AND COATINGS.

3.8 IDENTIFICATION SYSTEMS

Provide identification tags made of brass, engraved laminated plastic, or engraved anodized aluminum, indicating service and item number on all valves and dampers. Provide tags that are 1-3/8 inch minimum diameter with stamped or engraved markings. Make indentations black for reading clarity. Attach tags to valves with No. 12 AWG 0.0808-inch diameter corrosion-resistant steel wire, copper wire, chrome-plated beaded chain or plastic straps designed for that purpose.

3.9 DUCTWORK LEAK TESTS

The requirements for ductwork leak tests are specified in Section 23 05 93 TESTING, ADJUSTING AND BALANCING FOR HVAC.

3.10 TESTING, ADJUSTING, AND BALANCING

The requirements for testing, adjusting, and balancing are specified in Section 23 05 93 TESTING, ADJUSTING AND BALANCING FOR HVAC. Begin testing, adjusting, and balancing only when the air supply and distribution, including controls, has been completed, with the exception of performance

tests.

3.11 CLEANING AND ADJUSTING

Inside of thoroughly clean ducts, plenums, and casing of debris and blow free of small particles of rubbish and dust and then vacuum clean before installing outlet faces. Wipe equipment clean, with no traces of oil, dust, dirt, or paint spots. Provide temporary filters prior to startup of all fans that are operated during construction, and install new filters after all construction dirt has been removed from the building, and the ducts, plenums, casings, and other items specified have been vacuum cleaned. Maintain system in this clean condition until final acceptance. Properly lubricate bearings with oil or grease as recommended by the manufacturer. Tighten belts to proper tension. Adjust control valves and other miscellaneous equipment requiring adjustment to setting indicated or directed. Adjust fans to the speed indicated by the manufacturer to meet specified conditions. Maintain all equipment installed under the contract until close out documentation is received, the project is completed and the building has been documented as beneficially occupied.

3.12 OPERATION AND MAINTENANCE

3.12.1 Operation and Maintenance Manuals

Submit six manuals at least 2 weeks prior to field training. Submit data complying with the requirements specified in Section 01 78 23 OPERATION AND MAINTENANCE DATA and Section 01 78 24.00 20 FACILITY ELECTRONIC OPERATION AND MAINTENANCE SUPPORT INFORMATION (eOMSI). Submit Data Package 3 for the items/units listed under SD-10 Operation and Maintenance Data

3.12.2 Operation And Maintenance Training

Conduct a training course for the members of the operating staff as designated by the Contracting Officer. Make the training period consist of a total of 24 hours of normal working time and start it after all work specified herein is functionally completed and the Performance Tests have been approved. Conduct field instruction that covers all of the items contained in the Operation and Maintenance Manuals as well as demonstrations of routine maintenance operations. Submit the proposed On-site Training schedule concurrently with the Operation and Maintenance Manuals and at least 14 days prior to conducting the training course.

-- End of Section --

SECTION 23 03 00.00 20

BASIC MECHANICAL MATERIALS AND METHODS
08/10

PART 1 GENERAL

1.1 REFERENCES

The publications listed below form a part of this specification to the extent referenced. The publications are referred to within the text by the basic designation only.

ASTM INTERNATIONAL (ASTM)

ASTM B117 (2011) Standard Practice for Operating Salt Spray (Fog) Apparatus

1.2 RELATED REQUIREMENTS

This section applies to all sections of Divisions: 21, FIRE SUPPRESSION; 22, PLUMBING; and 23, HEATING, VENTILATING, AND AIR CONDITIONING of this project specification, unless specified otherwise in the individual section.

1.3 QUALITY ASSURANCE

1.3.1 Material and Equipment Qualifications

Provide materials and equipment that are standard products of manufacturers regularly engaged in the manufacture of such products, which are of a similar material, design and workmanship. Standard products shall have been in satisfactory commercial or industrial use for 2 years prior to bid opening. The 2-year use shall include applications of equipment and materials under similar circumstances and of similar size. The product shall have been for sale on the commercial market through advertisements, manufacturers' catalogs, or brochures during the 2 year period.

1.3.2 Alternative Qualifications

Products having less than a two-year field service record will be acceptable if a certified record of satisfactory field operation for not less than 6000 hours, exclusive of the manufacturer's factory or laboratory tests, can be shown.

1.3.3 Service Support

The equipment items shall be supported by service organizations. Submit a certified list of qualified permanent service organizations for support of the equipment which includes their addresses and qualifications. These service organizations shall be reasonably convenient to the equipment installation and able to render satisfactory service to the equipment on a regular and emergency basis during the warranty period of the contract.

1.3.4 Manufacturer's Nameplate

Each item of equipment shall have a nameplate bearing the manufacturer's name, address, model number, and serial number securely affixed in a conspicuous place; the nameplate of the distributing agent will not be

acceptable.

1.3.5 Modification of References

In each of the publications referred to herein, consider the advisory provisions to be mandatory, as though the word, "shall" had been substituted for "should" wherever it appears. Interpret references in these publications to the "authority having jurisdiction", or words of similar meaning, to mean the Contracting Officer.

1.3.5.1 Definitions

For the International Code Council (ICC) Codes referenced in the contract documents, advisory provisions shall be considered mandatory, the word "should" shall be interpreted as "shall." Reference to the "code official" shall be interpreted to mean the "Contracting Officer." For Navy owned property, references to the "owner" shall be interpreted to mean the "Contracting Officer." For leased facilities, references to the "owner" shall be interpreted to mean the "lessor." References to the "permit holder" shall be interpreted to mean the "Contractor."

1.3.5.2 Administrative Interpretations

For ICC Codes referenced in the contract documents, the provisions of Chapter 1, "Administrator," do not apply. These administrative requirements are covered by the applicable Federal Acquisition Regulations (FAR) included in this contract and by the authority granted to the Officer in Charge of Construction to administer the construction of this project. References in the ICC Codes to sections of Chapter 1, shall be applied appropriately by the Contracting Officer as authorized by his administrative cognizance and the FAR.

1.4 DELIVERY, STORAGE, AND HANDLING

Handle, store, and protect equipment and materials to prevent damage before and during installation in accordance with the manufacturer's recommendations, and as approved by the Contracting Officer. Replace damaged or defective items.

1.5 ELECTRICAL REQUIREMENTS

Furnish motors, controllers, disconnects and contactors with their respective pieces of equipment. Motors, controllers, disconnects and contactors shall conform to and have electrical connections provided under Section 26 20 00 INTERIOR DISTRIBUTION SYSTEM. Furnish internal wiring for components of packaged equipment as an integral part of the equipment. Extended voltage range motors will not be permitted. Controllers and contactors shall have a maximum of 120 volt control circuits, and shall have auxiliary contacts for use with the controls furnished. When motors and equipment furnished are larger than sizes indicated, the cost of additional electrical service and related work shall be included under the section that specified that motor or equipment. Power wiring and conduit for field installed equipment shall be provided under and conform to the requirements of Section 26 20 00 INTERIOR DISTRIBUTION SYSTEM.

1.6 INSTRUCTION TO GOVERNMENT PERSONNEL

When specified in other sections, furnish the services of competent

instructors to give full instruction to the designated Government personnel in the adjustment, operation, and maintenance, including pertinent safety requirements, of the specified equipment or system. Instructors shall be thoroughly familiar with all parts of the installation and shall be trained in operating theory as well as practical operation and maintenance work.

Instruction shall be given during the first regular work week after the equipment or system has been accepted and turned over to the Government for regular operation. The number of man-days (8 hours per day) of instruction furnished shall be as specified in the individual section. When more than 4 man-days of instruction are specified, use approximately half of the time for classroom instruction. Use other time for instruction with the equipment or system.

When significant changes or modifications in the equipment or system are made under the terms of the contract, provide additional instruction to acquaint the operating personnel with the changes or modifications.

1.7 ACCESSIBILITY

Install all work so that parts requiring periodic inspection, operation, maintenance, and repair are readily accessible. Install concealed valves, expansion joints, controls, dampers, and equipment requiring access, in locations freely accessible through access doors.

PART 2 PRODUCTS

Not Used

PART 3 EXECUTION

3.1 PAINTING OF NEW EQUIPMENT

New equipment painting shall be factory applied or shop applied, and shall be as specified herein, and provided under each individual section.

3.1.1 Factory Painting Systems

Manufacturer's standard factory painting systems may be provided subject to certification that the factory painting system applied will withstand 125 hours in a salt-spray fog test, except that equipment located outdoors shall withstand 3000 hours in a salt-spray fog test. Salt-spray fog test shall be in accordance with ASTM B117, and for that test the acceptance criteria shall be as follows: immediately after completion of the test, the paint shall show no signs of blistering, wrinkling, or cracking, and no loss of adhesion; and the specimen shall show no signs of rust creepage beyond 0.125 inch on either side of the scratch mark.

The film thickness of the factory painting system applied on the equipment shall not be less than the film thickness used on the test specimen. If manufacturer's standard factory painting system is being proposed for use on surfaces subject to temperatures above 120 degrees F, the factory painting system shall be designed for the temperature service.

3.1.2 Shop Painting Systems for Metal Surfaces

Clean, pretreat, prime and paint metal surfaces; except aluminum surfaces need not be painted. Apply coatings to clean dry surfaces. Clean the surfaces to remove dust, dirt, rust, oil and grease by wire brushing and

solvent degreasing prior to application of paint, except metal surfaces subject to temperatures in excess of 120 degrees F shall be cleaned to bare metal.

Where more than one coat of paint is specified, apply the second coat after the preceding coat is thoroughly dry. Lightly sand damaged painting and retouch before applying the succeeding coat. Color of finish coat shall be aluminum or light gray.

a. Temperatures Less Than 120 Degrees F: Immediately after cleaning, the metal surfaces subject to temperatures less than 120 degrees F shall receive one coat of pretreatment primer applied to a minimum dry film thickness of 0.3 mil, one coat of primer applied to a minimum dry film thickness of 1 mil; and two coats of enamel applied to a minimum dry film thickness of 1 mil per coat.

b. Temperatures Between 120 and 400 Degrees F: Metal surfaces subject to temperatures between 120 and 400 degrees F shall receive two coats of 400 degrees F heat-resisting enamel applied to a total minimum thickness of 2 mils.

c. Temperatures Greater Than 400 Degrees F: Metal surfaces subject to temperatures greater than 400 degrees F shall receive two coats of 600 degrees F heat-resisting paint applied to a total minimum dry film thickness of 2 mils.

-- End of Section --

SECTION 23 05 48.00 40

VIBRATION AND SEISMIC CONTROLS FOR HVAC PIPING AND EQUIPMENT
02/11

PART 1 GENERAL

1.1 REFERENCES

The publications listed below form a part of this specification to the extent referenced. The publications are referred to within the text by the basic designation only.

ACOUSTICAL SOCIETY OF AMERICA (ASA)

ASA S2.71	(1983; R 2006) Guide to the Evaluation of Human Exposure to Vibration in Buildings

NATIONAL ENVIRONMENTAL BALANCING BUREAU (NEBB)

NEBB PROCEDURAL STANDARDS	(2005) Procedural Standards for TAB (Testing, Adjusting and Balancing) Environmental Systems

1.2 ADMINISTRATIVE REQUIREMENTS

Section 23 00 00 AIR SUPPLY, DISTRIBUTION, VENTILATION, AND EXHAUST SYSTEMS applies to work specified in this section to the extent applicable.

Section 23 23 00 REFRIGERANT PIPING applies to work specified in this section to the extent applicabl.e

Section 23 81 00.00 20 UNITARY AIR CONDITIONING EQUIPMENT applies to work specified in this section to the extent applicable.

Section 23 81 28.10 22 VARIABLE REFRIGERANT FLOW (VRF) MULTI-SPLIT AIR CONDITIONING AND HEAT PUMP EQUIPMENT applies to work specified in this section to the extent applicable.

Section 23 82 00.00 20 TERMINAL HEATING AND COOLING UNITS applies to work specified in this section to the extent applicable.

Ensure all vibration-control apparatus is the product of a single manufacturing source, where possible. Human exposure levels should be considered using ASA S2.71 and NEBB PROCEDURAL STANDARDS.

Scheduled isolation mounting is in inches and is a minimum static deflection.

Spans referred to in Part 2, "Vibration-Isolation Systems Application," means longest bay dimension.

Determine exact mounting sizes and number of isolators by the isolator manufacturer based on equipment that will be installed. Check equipment revolutions per minute (rpm) and spring deflections to verify that resonance cannot occur.

Five working days prior to commencement of installation, submit

installation drawings for vibration isolator systems including equipment and performance requirements.

Indicate within outline drawings for vibration isolator systems, overall physical features, dimensions, ratings, service requirements, and weights of equipment.

Within ten working days of Contract Award, submit equipment and performance data for vibration isolator systems including equipment base design; inertia-block mass relative to support equipment weight; spring loads and free, operating, and solid heights of spring; spring diameters; nonmetallic isolator loading and deflection; disturbing frequency; natural frequency of mounts; deflection of working member; and anticipated amount of physical movement at the reference points.

Ensure data includes the following:

a. Mountings

b. Bases

c. Isolators

d. Floor-Mounted Piping

e. Vertical Piping

1.3 SUBMITTALS

Government approval is required for submittals with a "G" designation; submittals not having a "G" designation are for Contractor Quality Control approval. Submit the following in accordance with Section 01 33 00 SUBMITTAL PROCEDURES:

SD-02 Shop Drawings

Installation Drawings; G

Outline Drawings; G

SD-03 Product Data

Equipment and Performance Data; G

Isolators; G

SD-06 Test Reports

Type of Isolator; G

Type of Base; G

Allowable Deflection; G

Measured Deflection; G

PART 2 PRODUCTS

2.1 TYPE OF VIBRATION-ISOLATION PROVISIONS

Design for vibration isolation using NEBB PROCEDURAL STANDARDS as applicable to the following sections.

Submit test reports for testing vibration isolation for each type of isolator and each type of base, and meet referenced standards contained within this section. Include in test reports allowable deflection and measured deflection also meeting referenced standards within this section.

2.1.1 Materials

Ensure rubber is natural rubber and elastomer is chloroprene. Shore A durometer measurement of both materials and range between 40 and 60.

Inorganic materials such as precompressed, high-density, fibrous glass encased in a resilient moisture-impervious membrane may be used in lieu of specified natural rubber and elastomers. Where this substitution is made, ensure specified deflections are modified by the manufacturing source to accommodate physical characteristics of inorganic materials and to provide equal or better vibration isolation.

Ensure weather-exposed metal vibration-isolator parts are corrosion protected. Chloroprene coat springs.

2.1.2 Mountings

Provide the following mountings:

Type B: Double rubber-in-shear with molded-in steel reinforcement in top and bottom. Maximum deflections up to 0.50 inch are allowed.

Type C: Free-standing laterally stable open-spring type for deflections over 0.50 inch, with built-in bearing and leveling provisions, 0.25-inch thick Type A base elastomer pads, and accessories. Ensure outside diameter of each spring is equal to or greater than 0.9 times the operating height of the spring under rated load.

Type D: Partially housed type, containing one or more vertically restrained springs with at least 0.50 inch clearance maintained around springs, with adjustable limit stops, 0.25-inch thick Type A base elastomer pads, and accessories.

Type F: Combination spring and rubber-in-shear steel framed for hanger-rod mounting, with minimum total static deflection of 1 inch.

2.1.3 Bases

Provide the following bases:

Type U: Unit isolators without rails, structural-steel bases, or inertia blocks.

Type S: Structural-steel bases common to a supported assembly, made from welded-joint mill-rolled structural steel with closed-perimeter configuration, isolators attached to outrigger supports.

Ensure height of steel members is sufficient to provide stiffness required to maintain equipment manufacturer's recommended alignment and duty efficiency of power-transmission components. Ensure height of steel member does not result in member deflection at midpoint of unsupported span of more than 1/1,440th of the span between isolators. Minimum height is 5 inches.

Type CIB: Provide concrete inertia blocks common to the entire assembly, with welded-joint construction, mill-rolled structural-steel perimeters, welded-in No. 4 reinforcing bars 8 inches on center each way near the bottom of the block, outrigger-isolator mounting provisions, anchor bolts, and be filled with 3,000 psi cured-strength concrete.

Configure rectangular inertia bases to accommodate equipment supported.

Ensure minimum thickness of inertia base, in addition to providing suitable mass, is sufficient to provide stiffness to maintain equipment manufacturer's recommended alignment and duty efficiency of power-transmission components, and is sufficient to result in base deflection at midpoint of unsupported span of not more than 1/1,440th of the span between isolators. Verify minimum thickness, the preceding requirements not withstanding, is 8 percent of the longest base dimension.

Ensure pumps with flexible couplings does not have inertia bases less than 8 inches thick, and the minimum mass of concrete inertia block is equal in weight to supported equipment.

2.2 VIBRATION-ISOLATION SYSTEMS APPLICATION

Vibration isolation design per NEBB PROCEDURAL STANDARDS.

2.2.1 Reciprocating Refrigeration Compressor Locations

TYPE EQUIPMENT	20-FOOT FLOOR-SPAN PROVISIONS*	ON\ABOVE GRADE 30-FOOT FLOOR-SPAN PROVISIONS*	ON\ABOVE GRADE 40-FOOT FLOOR-SPAN PROVISIONS*	ON\ABOVE GRADE
500 to 750 rpm	C-U-1.5	C-U-2.5	C-CIB-2.75	
750 rpm and over	C-U-1.0	C-U-2.0	C-CIB-2.5	

*TYPE OF MOUNTING, BASE, AND MINIMUM DEFLECTION IN INCHES

2.2.2 Centrifugal Pump Locations

TYPE EQUIPMENT	BASEMENT BELOW-GRADE PROVISIONS*	ON\ABOVE GRADE 20-FOOT FLOOR-SPAN PROVISIONS*	ON\ABOVE GRADE 30-FOOT FLOOR-SPAN PROVISIONS*	ON\ABOVE GRADE 40-FOOT FLOOR-SPAN PROVISIONS*
Close-				

TYPE EQUIPMENT	BASEMENT BELOW-GRADE PROVISIONS*	ON\ABOVE GRADE 20-FOOT FLOOR-SPAN PROVISIONS*	ON\ABOVE GRADE 30-FOOT FLOOR-SPAN PROVISIONS*	ON\ABOVE GRADE 40-FOOT FLOOR-SPAN PROVISIONS*
couple through 5 hp	None	-R-0.35		

2.2.3 Air-Cooled Condensing Unit Locations

TYPE EQUIPMENT	20-FOOT ROOF-SPAN PROVISIONS*	30-FOOT ROOF-SPAN PROVISIONS*	40-FOOT ROOF-SPAN PROVISIONS*
Through 5 hp over 900 rpm	B-U-0.5	D-U-1.0	D-U-1.75
Over 5 hp to 500 rpm	B-U-0.5	D-U-1.75	D-U-2.5
500 rpm and over	B-U-0.5	D-U-1.0	D-U-1.75

*TYPE OF MOUNTING, BASE, AND MINIMUM DEFLECTION IN INCHES

2.2.4 Low-Pressure Suspended Air-Handling Unit (AHU) Locations

Vibration-isolation provisions apply to ceiling-suspended Air Moving and Conditioning Association Class A packaged central-station units.

TYPE EQUIPMENT	20-FOOT ROOF-SPAN PROVISIONS*	30-FOOT ROOF-SPAN PROVISIONS*	40-FOOT ROOF-SPAN PROVISIONS*
Through 5 hp	F-U-1.0	F-U-1.0	F-U-1.0
7-1/2 hp and over 250 to 500 rpm	F-U-1.75	F-U-1.75	F-U-1.75
500 rpm and over	F-U-1.0	F-U-1.25	F-U-1.55

*TYPE OF MOUNTING, BASE, AND MINIMUM DEFLECTION IN INCHES

2.2.5 Low-Pressure AHU Locations

Vibration-isolation provisions apply to floor-mounted Air Moving and Conditioning Association Class A packaged central-station units.

TYPE EQUIPMENT	ON\ABOVE GRADE 20-FOOT FLOOR-SPAN PROVISIONS*	ON\ABOVE GRADE 30-FOOT FLOOR-SPAN PROVISIONS*	ON\ABOVE GRADE 40-FOOT FLOOR-SPAN PROVISIONS*
Through 5 hp	C-U-1.0	C-U-1.0	C-U-1.0

TYPE EQUIPMENT	ON\ABOVE GRADE 20-FOOT FLOOR-SPAN PROVISIONS*	ON\ABOVE GRADE 30-FOOT FLOOR-SPAN PROVISIONS*	ON\ABOVE GRADE 40-FOOT FLOOR-SPAN PROVISIONS*
7-1/2 hp and over 250 to 500 rpm	C-U-1.75	C-U-1.75	C-U-1.75
500 rpm	C-U-1.0	C-U-1.5	

*TYPE OF MOUNTING, BASE, AND MINIMUM DEFLECTION IN INCHES

2.2.6 Air-Moving Device Locations

Vibration-isolation provisions apply to housed free-standing fans of any pressure rating, located in factory- fabricated central-station units supply-air.

TYPE EQUIPMENT	ON\ABOVE GRADE 20-FOOT FLOOR-SPAN PROVISIONS*	ON\ABOVE GRADE 30-FOOT FLOOR-SPAN PROVISIONS*	ON\ABOVE GRADE 40-FOOT FLOOR-SPAN PROVISIONS*
Through 20 hp 200 to 300 rpm	C-S-2.5	C-S-2.5	C-S-3.5
300 to 500 rpm	C-S-1.75	C-S-1.75	C-S-2.5
500 rpm and over	C-S-1.0	C-S-1.5	C-S-1.75
Over 20 hp 250 to 300 rpm	C-S-2.75	C-CIB-3.5	C-CIB-5.0
300 to 500 rpm	C-S-1.75	C-CIB-2.5	C-CIB-3.5
500 rpm and over	C-S-1.0	C-CIB-1.75	C-CIB-2.5

*TYPE OF MOUNTING, BASE, AND MINIMUM DEFLECTION IN INCHES

2.3 PIPE AND DUCT VIBRATION ISOLATION

Type G: Provide isolators with in-series contained steel springs and preformed fibrous-glass or chloroprene-elastomer elements for connecting to building-structure attachments. Load devices by supported system during operating conditions to produce a minimum spring and elastomer static deflection of 1 inch and 3/8 inch, respectively.

Type H: Provide isolators with contained chloroprene-elastomer elements for connecting to building-structure attachments. Load devices by supported system during operating conditions to produce a minimum elastomer static deflection of 3/8 inch.

Type J: Provide isolators with elastomers mounted on floor-supported columns or directly on the floor. Load devices by supported system during operating conditions to produce a minimum elastomer static deflection of 3/8 inch.

2.3.1 Floor-Mounted Piping

Type K: Provide isolators with springs mounted on floor-supported columns or directly on the floor. Load devices by supported system during operating conditions to produce a minimum spring static deflection of 1 inch.

2.3.2 Vertical Piping

Type L: Provide isolators which are pipe base-support devices with one or more contained steel springs. Load devices by supported system during operating conditions to produce a minimum static deflection of 1 inch. Equip devices with precompression and vertical-limit features, as well as a minimum 1/4-inch thick elastomer sound pad and isolation washers, for mounting to floor.

Type M: Provide isolators which are elastomer mounted baseplate and riser pipe-guide devices, with contained double acting elastomer elements which under rated load have a minimum static deflection of 3/8 inch. Size isolator to accommodate thermal insulation within the stationary guide ring.

PART 3 EXECUTION

3.1 INSTALLATION

Install equipment in accordance with manufacturer's recommendations.

Ensure rails, structural steel bases, and concrete inertia blocks are raised not less than 1 inch above the floor and are level when equipment supported is under operating load.

Ensure vibration-isolation installation and deflection testing after equipment start-up is directed by a competent representative of the manufacturer.

3.2 TESTS AND REPORTS

Ensure vibration-isolation devices are deflection tested. Submit test reports in accordance with paragraph entitled, "Submittals," substantiating that all equipment has been isolated as specified and that minimum specified deflections have been met. Make all measurements in the presence of the Contracting Officer.

-- End of Section --

THIS PAGE HAS BEEN INTENTIONALLY LEFT BLANK

SECTION 23 05 93

TESTING, ADJUSTING, AND BALANCING FOR HVAC
08/09

PART 1 GENERAL

1.1 REFERENCES

The publications listed below form a part of this specification to the extent referenced. The publications are referred to within the text by the basic designation only.

ACOUSTICAL SOCIETY OF AMERICA (ASA)

ASA S1.11	(2004; Errata 2005; R 2009) Specification for Octave- Band and Fractional-Octave-Band Analog and Digital Filters (ASA 65)
ASA S1.4	(1983; Amendment 1985; R 2006) Specification for Sound Level Meters (ASA 47)

AIR MOVEMENT AND CONTROL ASSOCIATION INTERNATIONAL (AMCA)

AMCA 203	(1990; R 2011) Field Performance Measurements of Fan Systems

AMERICAN SOCIETY OF HEATING, REFRIGERATING AND AIR-CONDITIONING ENGINEERS (ASHRAE)

ASHRAE HVAC APP IP HDBK	(2011) HVAC Applications Handbook, I-P Edition

ASSOCIATED AIR BALANCE COUNCIL (AABC)

AABC MN-1	(2002; 6th ed) National Standards for Total System Balance
AABC MN-4	(1996) Test and Balance Procedures

NATIONAL ENVIRONMENTAL BALANCING BUREAU (NEBB)

NEBB MASV	(2006) Procedural Standards for Measurements and Assessment of Sound and Vibration
NEBB PROCEDURAL STANDARDS	(2005) Procedural Standards for TAB (Testing, Adjusting and Balancing) Environmental Systems

SHEET METAL AND AIR CONDITIONING CONTRACTORS' NATIONAL ASSOCIATION (SMACNA)

SMACNA 1780	(2002) HVAC Systems - Testing, Adjusting and Balancing, 3rd Edition

SMACNA 1858	(2004) HVAC Sound And Vibration Manual - First Edition
SMACNA 1972 CD	(2012) HVAC Air Duct Leakage Test Manual - 2nd Edition

1.2 DEFINITIONS

a. AABC: Associated Air Balance Council.

b. COTR: Contracting Officer's Technical Representative.

c. DALT: Duct air leakage test

d. DALT'd: Duct air leakage tested

e. HVAC: Heating, ventilating, and air conditioning; or heating, ventilating, and cooling.

f. NEBB: National Environmental Balancing Bureau

g. Out-of-tolerance data: Pertains only to field acceptance testing of Final DALT or TAB report. When applied to DALT work, this phase means "a leakage rate measured during DALT field acceptance testing which exceeds the leakage rate allowed by Appendix D REQUIREMENTS FOR DUCT AIR LEAK TESTING." When applied to TAB work this phase means "a measurement taken during TAB field acceptance testing which does not fall within the range of plus 5 to minus 5 percent of the original measurement reported on the TAB Report for a specific parameter."

h. Season of maximum heating load: The time of year when the outdoor temperature at the project site remains within plus or minus 30 degrees Fahrenheit of the project site's winter outdoor design temperature, throughout the period of TAB data recording.

i. Season of maximum cooling load: The time of year when the outdoor temperature at the project site remains within plus or minus 5 degrees Fahrenheit of the project site's summer outdoor design temperature, throughout the period of TAB data recording.

j. Season 1, Season 2: Depending upon when the project HVAC is completed and ready for TAB, Season 1 is defined, thereby defining Season 2. Season 1 could be the season of maximum heating load, or the season of maximum cooling load.

k. Sound measurements terminology: Defined in AABC MN-1, NEBB MASV, or SMACNA 1858 (TABB).

l. TAB: Testing, adjusting, and balancing (of HVAC systems).

m. TAB'd: HVAC Testing/Adjusting/Balancing procedures performed.

n. TAB Agency: TAB Firm

o. TAB team field leader: TAB team field leader

p. TAB team supervisor: TAB team engineer.

q. TAB team technicians: TAB team assistants.

r. TABB: Testing Adjusting and Balancing Bureau.

1.2.1 Similar Terms

In some instances, terminology differs between the Contract and the TAB Standard primarily because the intent of this Section is to use the industry standards specified, along with additional requirements listed herein to produce optimal results.

The following table of similar terms is provided for clarification only. Contract requirements take precedent over the corresponding AABC, NEBB, or TABB requirements where differences exist.

SIMILAR TERMS

Contract Term	AABC Term	NEBB Term	TABB Term
TAB Standard	National Standards for Testing and Balancing Heating, Ventilating, and Air Conditioning Systems	Procedural Standards for Testing, Adjusting and Balancing of Environmental Systems	International Standards for Environmental Systems Balance
TAB Specialist	TAB Engineer	TAB Supervisor	TAB Supervisor
Systems Readiness Check	Construction Phase Inspection	Field Readiness Check & Preliminary Field Procedures	Field Readiness Check & Prelim. Field Procedures

1.3 WORK DESCRIPTION

The work includes duct air leakage testing (DALT) and testing, adjusting, and balancing (TAB) of new heating, ventilating, and cooling (HVAC) air distribution systems including ducts, and piping which are located within, on, under, between, and adjacent to buildings.

Perform TAB in accordance with the requirements of the TAB procedural standard recommended by the TAB trade association that approved the TAB Firm's qualifications. Comply with requirements of AABC MN-1, NEBB PROCEDURAL STANDARDS, or SMACNA 1780 (TABB) as supplemented and modified by this specification section. All recommendations and suggested practices contained in the TAB procedural standards are considered mandatory.

Conduct DALT and TAB of the indicated existing systems and equipment and submit the specified DALT and TAB reports for approval. Conduct DALT testing in compliance with the requirements specified in SMACNA 1972 CD, except as supplemented and modified by this section. Conduct DALT and TAB work in accordance with the requirements of this section.

1.3.1 Air Distribution Systems

Test, adjust, and balance systems (TAB) in compliance with this section.

Obtain Contracting Officer's written approval before applying insulation to exterior of air distribution systems as specified under Section 23 07 00 THERMAL INSULATION FOR MECHANICAL SYSTEMS.

1.3.2 Related Requirements

Requirements for price breakdown of HVAC TAB work are specified in Section 01 20 00.00 20 PRICE AND PAYMENT PROCEDURES.

Requirements for construction scheduling related to HVAC TAB work are specified in Section 01 32 17.00 20 NETWORK ANALYSIS SCHEDULES (NAS).

Section 23 00 00 AIR SUPPLY, DISTRIBUTION, VENTILATION AND EXHAUST SYSTEMS applies to work in this section.

1.4 SUBMITTALS

Government approval is required for submittals with a "G" designation; submittals not having a "G" designation are for Contractor Quality Control approval. Submit the following in accordance with Section 01 33 00 SUBMITTAL PROCEDURES:

SD-01 Preconstruction Submittals

Designation of TAB team assistants; G

Designation of TAB team engineer; G

Designation of TAB team field leader; G

SD-06 Test Reports

DALT and TAB Work Execution Schedule; G

DALT and TAB Procedures Summary; G

Design review report; G

Pre-Final DALT report; G

Final DALT report; G

TAB report for Season 1; G

TAB report for Season 2; G

SD-07 Certificates

Independent TAB agency and personnel qualifications; G

Advance notice of Pre-Final DALT field work; G

Completed Pre-Final DALT Work Checklist; G

Advance Notice of Season 1 TAB Field Work; G

Completed Season 1 Pre-TAB Work Checklist

Advance Notice of Season 2 TAB Field Work; G

Completed Season 2 Pre-TAB Work Checklist

DALT and TAB Submittal and Work Schedule; G

Design review report; G

1.5 QUALITY ASSURANCE

1.5.1 Independent TAB Agency and Personnel Qualifications

To secure approval for the proposed agency, submit information certifying that the TAB agency is a first tier subcontractor who is not affiliated with any other company participating in work on this contract, including design, furnishing equipment, or construction. Further, submit the following, for the agency, to Contracting Officer for approval:

a. Independent AABC or NEBB or TABB TAB agency:

TAB agency: AABC registration number and expiration date of current certification; or NEBB certification number and expiration date of current certification; or TABB certification number and expiration date of current certification.

TAB team supervisor: Name and copy of AABC or NEBB or TABB TAB supervisor certificate and expiration date of current certification.

TAB team field leader: Name and documented evidence that the team field leader has satisfactorily performed full-time supervision of TAB work in the field for not less than 3 years immediately preceding this contract's bid opening date.

TAB team field technicians: Names and documented evidence that each field technician has satisfactorily assisted a TAB team field leader in performance of TAB work in the field for not less than one year immediately preceding this contract's bid opening date.

Current certificates: Registrations and certifications are current, and valid for the duration of this contract. Renew Certifications which expire prior to completion of the TAB work, in a timely manner so that there is no lapse in registration or certification. TAB agency or TAB team personnel without a current registration or current certification are not to perform TAB work on this contract.

b. TAB Team Members: TAB team approved to accomplish work on this contract are full-time employees of the TAB agency. No other personnel is allowed to do TAB work on this contract.

c. Replacement of TAB team members: Replacement of members may occur if each new member complies with the applicable personnel qualifications and each is approved by the Contracting Officer.

1.6 SEQUENCING AND SCHEDULING

1.6.1 DALT and TAB Submittal and Work Schedule

Comply with additional requirements specified in Appendix C: DALT AND TAB

SUBMITTAL AND WORK SCHEDULE included at the end of this section

1.7 SUBCONTRACTOR SPECIAL REQUIREMENTS

Perform all work in this section in accordance with the paragraph entitled "Subcontractor Special Requirements" in Section 01 30 00 ADMINISTRATIVE REQUIREMENTS, stating that all contract requirements of this section must be accomplished directly by a first tier subcontractor. No work may be performed by a second tier subcontractor. Comply with additional requirements specified in Appendix C: DALT AND TAB WORK SCHEDULE included at the end of this section.

PART 2 PRODUCTS

Not Used

PART 3 EXECUTION

3.1 WORK DESCRIPTIONS OF PARTICIPANTS

Comply with requirements of this section as specified in Appendix A WORK DESCRIPTIONS OF PARTICIPANTS.

3.2 PRE-DALT/TAB MEETING

Meet with the Contracting Officer's technical representative (COTR) to develop a mutual understanding relative to the details of the DALT work and TAB work requirements. Ensure that the TAB supervisor is present at this meeting. Requirements to be discussed include required submittals, work schedule, and field quality control.

3.3 DALT PROCEDURES

3.3.1 Instruments, Consumables and Personnel

Provide instruments, consumables and personnel required to accomplish the DALT field work. Follow the same basic procedure specified below for TAB Field Work, including maintenance and calibration of instruments, accuracy of measurements, preliminary procedures, field work, workmanship and treatment of deficiencies. Calibrate and maintain instruments in accordance with manufacturer's written procedures.

3.3.2 Advance Notice of Pre-Final DALT Field Work

On completion of the installation of each duct system indicated to be DALT'd, notify the Contracting Officer in writing prior to the COTR's duct selection field visit.

3.3.3 Ductwork To Be DALT'd

From each duct system indicated as subject to DALT, the COTR will randomly select sections of each completed duct system for testing by the Contractor's TAB Firm. The sections selected will not exceed 20 percent of the total measured linear footage of duct systems indicated as subject to DALT.

3.3.4 DALT Testing

Perform DALT on the HVAC duct sections of each system as selected by the

COTR. Use the duct class, seal class, leakage class and the leak test pressure data indicated on the drawings, to comply with the procedures specified in SMACNA 1972 CD.

In spite of specifications of SMACNA 1972 CD to the contrary, DALT ductwork of construction class of 3-inch water gauge static pressure and below if indicated to be DALT'd. Complete DALT work on the COTR selected ductwork within 48 hours after the particular ductwork was selected for DALT. Separately conduct DALT work for large duct systems to enable the DALT work to be completed in 48 hours.

3.3.5 Pre-final DALT Report

After completion of the DALT work, prepare a Pre-final DALT Report meeting the additional requirements specified in Appendix B REPORTS - DALT and TAB. Data required by those data report forms shall be furnished by the TAB team. Prepare the report neatly and legibly; the Pre-final DALT report shall provide the basis for the Final DALT Report.

TAB supervisor shall review, approve and sign the Pre-Final DALT Report and submit this report within one day of completion of DALT field work. Verbally notify the COTR that the field check of the Pre-Final DALT Report data can commence.

3.3.6 Quality Assurance - COTR DALT Field Acceptance Testing

In the presence of the COTR and TAB team field leader, verify for accuracy Pre-final DALT Report data selected by the COTR. For each duct system, this acceptance testing shall be conducted on a maximum of 50 percent of the duct sections DALT'd.

Further, if any data on the Pre-final DALT report form for a given duct section is out-of-tolerance, then field acceptance testing shall be conducted on data for one additional duct section, preferably in the same duct system, in the presence of the COTR.

3.3.7 Additional COTR Field Acceptance Testing

If any of the duct sections checked for a given system are determined to have a leakage rate measured that exceeds the leakage rate allowed by SMACNA Leak Test Manual for an indicated duct construction class and sealant class, terminate data checking for that section. The associated Pre-final DALT Report data for the given duct system will be disapproved. Make the necessary corrections and prepare a revised Pre-final DALT Report. Reschedule a field check of the revised report data with the COTR.

3.3.8 Certified Final DALT Report

On successful completion of all field checks of the Pre-Final DALT Report data for all systems, the TAB Supervisor shall assemble, review, approve, sign and submit the Final DALT Report in compliance with Appendix B REPORTS - DALT and TAB to the Contracting Officer for approval.

3.3.9 Prerequisite for TAB Field Work

Do not commence TAB field work prior to the completion and approval, for all systems, of the Final DALT Report.

3.4 TAB PROCEDURES

3.4.1 TAB Field Work

Test, adjust, and balance the HVAC systems until measured flow rates (air and water flow) are within plus or minus 5 percent of the design flow rates as specified or indicated on the contract documents.

That is, comply with the the requirements of AABC MN-1 , or SMACNA 1780 (TABB) and SMACNA 1858 (TABB),except as supplemented and modified by this section.

Provide instruments and consumables required to accomplish the TAB work. Calibrate and maintain instruments in accordance with manufacturer's written procedures.

Test, adjust, and balance the HVAC systems until measured flow rates (air and water flow) are within plus or minus 5 percent of the design flow rates as specified or indicated on the contract documents. Conduct TAB work, including measurement accuracy, and sound measurement work in conformance with the AABC MN-1 and AABC MN-4, or NEBB TABES and NEBB MASV, or SMACNA 1780 (used by TABB) and SMACNA 1858 sound measurement procedures, except as supplemented and modified by this section. The only water flow and air flow reporting which can be deferred until the Season 2 is that data which would be affected in terms of accuracy due to outside ambient conditions.

3.4.2 Preliminary Procedures

Use the approved pre-field engineering report as instructions and procedures for accomplishing TAB field work. TAB engineer is to locate, in the field, test ports required for testing. It is the responsibility of the sheet metal contractor to provide and install test ports as required by the TAB engineer.

3.4.3 TAB Air Distribution Systems

3.4.3.1 Units With Coils

Report heating and cooling performance capacity tests for hot water, chilled water, DX and steam coils for the purpose of verifying that the coils meet the indicated design capacity. Submit the following data and calculations with the coil test reports:

a. For air handlers with capacities greater than 7.5 tons (90,000 Btu) cooling, such as factory manufactured units, central built-up units and rooftop units, conduct capacity tests in accordance with AABC MN-4, procedure 3.5, "Coil Capacity Testing."

   Do not determine entering and leaving wet and dry bulb temperatures by single point measurement, but by the average of multiple readings in compliance with paragraph 3.5-5, "Procedures", (in subparagraph d.) of AABC MN-4, Procedure 3.5, "Coil Capacity Testing."

   Submit part-load coil performance data from the coil manufacturer converting test conditions to design conditions; use the data for the purpose of verifying that the coils meet the indicated design capacity in compliance with AABC MN-4, Procedure 3.5, "Coil Capacity Testing," paragraph 3.5.7, "Actual Capacity Vs. Design Capacity" (in subparagraph c.).

b. For units with capacities of 7.5 tons (90,000 Btu) or less, such as fan coil units, duct mounted reheat coils associated with VAV terminal units, and unitary units, such as through-the-wall heat pumps:

Determine the apparent coil capacity by calculations using single point measurement of entering and leaving wet and dry bulb temperatures; submit the calculations with the coil reports.

3.4.3.2 Air Handling Units

Air handling unit systems including fans (air handling unit fans, exhaust fans and winter ventilation fans), coils, ducts, plenums, mixing boxes, terminal units, variable air volume boxes, and air distribution devices for supply air, return air, outside air, mixed air relief air, and makeup air.

3.4.3.3 Makeup Air Units

Makeup air unit systems including fans, coils, ducts, plenums, registers, diffusers, grilles, and louvers for supply air, return air, outside air, and mixed air.

3.4.3.4 Fan Coils

Fan coil unit systems including fans, coils, ducts, plenums, and air distribution devices for supply air, return air, and outside air.

3.4.3.5 Exhaust Fans

Exhaust fan systems including fans, ducts, plenums, grilles, and hoods for exhaust air.

3.4.4 Sound Measurement Work

3.4.4.1 Areas To Be Sound Measured

In the following spaces, measure and record the sound power level for each octave band listed in ASHRAE HVAC APP IP HDBK Noise Criteria:

a. All HVAC mechanical rooms, including machinery spaces and other spaces containing HVAC power drivers and power driven equipment.

b. All spaces sharing a common barrier with each mechanical room, including rooms overhead, rooms on the other side of side walls, and rooms beneath the mechanical room floor.

3.4.4.2 Procedure

Measure sound levels in each room, when unoccupied except for the TAB team, with all HVAC systems that would cause sound readings in the room operating in their noisiest mode. Record the sound level in each octave band. Attempt to mitigate the sound level and bring the level to within the specified ASHRAE HVAC APP IP HDBK noise criteria goals, if such mitigation is within the TAB team's control. State in the report the ASHRAE HVAC APP IP HDBK noise criteria goals. If sound level cannot be brought into compliance, provide written notice of the deficiency to the Contractor for resolution or correction.

3.4.4.3 Timing

Measure sound levels at times prescribed by AABC or NEBB or TABB.

3.4.4.4 Meters

Measure sound levels with a sound meter complying with ASA S1.4, Type 1 or 2, and an octave band filter set complying with ASA S1.11. Use measurement methods for overall sound levels and for octave band sound levels as prescribed by NEBB.

3.4.4.5 Calibration

Calibrate sound levels as prescribed by AABC or NEBB or TABB, except that calibrators emitting a sound pressure level tone of 94 dB at 1000 hertz (Hz) are also acceptable.

3.4.4.6 Background Noise Correction

Determine background noise component of room sound (noise) levels for each (of eight) octave bands as prescribed by AABC or NEBB or TABB.

3.4.5 TAB Work on Performance Tests With Seasonal Limitations

3.4.5.1 Performance Tests

Accomplish proportionate balancing TAB work on the air distribution systems and water distribution systems, in other words, accomplish adjusting and balancing of the air flows, any time during the duration of this contract, subject to the limitations specified elsewhere in this section. However, accomplish, within the following seasonal limitations, TAB work on HVAC systems which directly transfer thermal energy.

3.4.5.2 Season Of Maximum Load

Visit the contract site for at least two TAB work sessions for TAB field measurements. Visit the contract site during the season of maximum heating load and visit the contract site during the season of maximum cooling load, the goal being to TAB the operational performance of the heating systems and cooling systems under their respective maximum outdoor environment-caused loading. During the seasonal limitations, TAB the operational performance of the heating systems and cooling systems.

3.4.5.3 Ambient Temperatures

On each tab report form used for recording data, record the outdoor and indoor ambient dry bulb temperature range and the outdoor and indoor ambient wet bulb temperature range within which the report form's data was recorded. Record these temperatures at beginning and at the end of data taking.

3.4.5.4 Sound Measurements

Comply with paragraph entitled "Sound Measurement Work," specifically, the requirement that a room must be operating in its noisiest mode at the time of sound measurements in the room. The maximum noise level measurements could depend on seasonally related heat or cooling transfer equipment.

3.4.6 Workmanship

Conduct TAB work on the HVAC systems until measured flow rates are within plus or minus 5 percent of the design flow rates as specified or indicated on the contract documents. This TAB work includes adjustment of balancing valves, balancing dampers, and sheaves. Further, this TAB work includes changing out fan sheaves and pump impellers if required to obtain air and water flow rates specified or indicated. If, with these adjustments and equipment changes, the specified or indicated design flow rates cannot be attained, contact the Contracting Officer for direction.

3.4.7 Deficiencies

Strive to meet the intent of this section to maximize the performance of the equipment as designed and installed. However, if deficiencies in equipment design or installation prevent TAB work from being accomplished within the range of design values specified in the paragraph entitled "Workmanship," provide written notice as soon as possible to the Contractor and the Contracting Officer describing the deficiency and recommended correction.

Responsibility for correction of installation deficiencies is the Contractor's. If a deficiency is in equipment design, call the TAB team supervisor for technical assistance. Responsibility for reporting design deficiencies to Contractor is the TAB team supervisor's.

3.4.8 TAB Reports

Additional requirements for TAB Reports are specified in Appendix B REPORTS - DALT and TAB. After completion of the TAB field work, prepare the TAB field data for TAB supervisor's review and certification, using the reporting forms approved in the pre-field engineering report. Data required by those approved data report forms is to be furnished by the TAB team. Except as approved otherwise in writing by the Contracting Officer, the TAB work and thereby the TAB report is considered incomplete until the TAB work is accomplished to within the accuracy range specified in the paragraph entitled "Workmanship."

3.4.9 Quality Assurance - COTR TAB Field Acceptance Testing

3.4.9.1 TAB Field Acceptance Testing

During the field acceptance testing, verify, in the presence of the COTR, random selections of data (air quantities, air motion, sound level readings) recorded in the TAB Report. Points and areas for field acceptance testing are to be selected by the COTR. Measurement and test procedures are the same as approved for TAB work for the TAB Report.

Field acceptance testing includes verification of TAB Report data recorded for the following equipment groups:

Group 1: All chillers, boilers, return fans, computer room units, and air handling units (rooftop and central stations).

Group 2: 25 percent of the VAV terminal boxes and associated diffusers and registers.

Group 3: 25 percent of the supply diffusers, registers, grilles associated with constant volume air handling units.

Group 4: 25 percent of the return grilles, return registers, exhaust grilles and exhaust registers.

Group 5: 25 percent of the supply fans and exhaust fans.

Further, if any data on the TAB Report for Groups 2 through 5 is found not to fall within the range of plus 5 to minus 5 percent of the TAB Report data, additional group data verification is required in the presence of the COTR. Verify TAB Report data for one additional piece of equipment in that group. Continue this additional group data verification until out-of-tolerance data ceases to be found.

3.4.9.2 Additional COTR TAB Field Acceptance Testing

If any of the acceptance testing measurements for a given equipment group is found not to fall within the range of plus 5 to minus 5 percent of the TAB Report data, terminate data verification for all affected data for that group. The affected data for the given group will be disapproved. Make the necessary corrections and prepare a revised TAB Report. Reschedule acceptance testing of the revised report data with the COTR.

3.4.9.3 Prerequisite for Approval

Compliance with the field acceptance testing requirements of this section is a prerequisite for the final Contracting Officer approval of the TAB Report submitted.

3.5 MARKING OF SETTINGS

Upon the final TAB work approval, permanently mark the settings of HVAC adjustment devices including valves, gauges, splitters, and dampers so that adjustment can be restored if disturbed at any time. Provide permanent markings clearly indicating the settings on the adjustment devices which result in the data reported on the submitted TAB report.

3.6 MARKING OF TEST PORTS

The TAB team is to permanently and legibly mark and identify the location points of the duct test ports. If the ducts have exterior insulation, make these markings on the exterior side of the duct insulation. Show the location of test ports on the as-built mechanical drawings with dimensions given where the test port is covered by exterior insulation.

3.7 APPENDICES

Appendix A WORK DESCRIPTIONS OF PARTICIPANTS
Appendix B REPORTS - DALT and TAB
Appendix C DALT AND TAB SUBMITTAL AND WORK SCHEDULE
Appendix D REQUIREMENTS FOR DUCT AIR LEAK TESTING

Appendix A

WORK DESCRIPTIONS OF PARTICIPANTS

The Contractor is responsible for ensuring compliance with all requirements of this specification section. However, the following delineation of specific work items is provided to facilitate and co-ordinate execution of the various work efforts by personnel from separate organizations.

1. Contractor

a. HVAC documentation: Provide pertinent contract documentation to the TAB Firm, to include the following: the contract drawings and specifications; copies of the approved submittal data for all HVAC equipment, air distribution devices, and air/water measuring/balancing devices; the construction work schedule; and other applicable documents requested by the TAB Firm. Provide the TAB Firm copies of contract revisions and modifications as they occur.

b. Schedules: Ensure the requirements specified under the paragraph "DALT and TAB Schedule" are met.

c. Pre-DALT and TAB meeting: Arrange and conduct the Pre-DALT and TAB meeting. Ensure that a representative is present for the sheet metal contractor, the mechanical contractor, the electrical contractor, and the automatic temperature controls contractor.

d. Coordinate Support: Provide and coordinate support personnel required by the TAB Firm in order to accomplish the DALT and TAB field work. Support personnel may include factory representatives, HVAC controls installers, HVAC equipment mechanics, sheet metal workers, pipe fitters, and insulators. Ensure support personnel are present at the work site at the times required.

e. Correct Deficiencies: Ensure the notifications of Construction Deficiencies are provided as specified herein. Refer to the paragraph entitled "Construction Deficiencies." Correct each deficiency as soon as practical with the Contracting Officer, and submit revised schedules and other required documentation.

f. Pre-TAB Work Checklists: Complete check out and debugging of HVAC equipment, ducts, and controls prior to the TAB engineer arriving at the project site to begin the TAB work. Debugging includes searching for and eliminating malfunctioning elements in the HVAC system installations, and verifying all adjustable devices are functioning as designed. Include as pre-TAB work checklist items, the deficiencies pointed out by the TAB team supervisor in the design review report.

Prior to the TAB field team's arrival, ensure completion of the applicable inspections and work items listed in the TAB team supervisor's DALT and TAB Work Procedures Summary. Do not allow the TAB team to commence TAB field work until all of the following are completed.

g. Give Notice of Testing: Submit advance notice of TAB field work accompanied by completed prerequisite HVAC Work List

h. Insulation work: Ensure that no insulation is shall not be installed on ducts to be DALT'd until DALT work on the subject ducts is complete.

Ensure the duct and piping systems are properly insulated and vapor sealed upon the successful completion and acceptance of the DALT and TAB work.

2. TAB Team Supervisor

a. Overall management: Supervise and manage the overall TAB team work effort, including preliminary and technical DALT and TAB procedures and TAB team field work.

b. Schedule: Ensure the requirements specified under the paragraph "DALT and TAB Schedule" are met.

c. Submittals: Provide the submittals specified herein.

d. Pre-DALT/TAB meeting: Attend meeting with Contractor. Ensure TAB personnel that will be involved in the TAB work under this contract attend the meeting.

e. Design Review Report: Submit typed report describing omissions and deficiencies in the HVAC system's design that would preclude the TAB team from accomplishing the duct leakage testing work and the TAB work requirements of this section. Provide a complete explanation including supporting documentation detailing the design deficiency. State that no deficiencies are evident if that is the case.

f. Support required: Specify the technical support personnel required from the Contractor other than the TAB agency; such as factory representatives for temperature controls or for complex equipment. Inform the Contractor in writing of the support personnel needed and when they are needed. Furnish the notice as soon as the need is anticipated, either with the design review report, or the DALT and TAB Procedures Summary, the during the DALT or TAB field work.

Ensure the Contractor is properly notified and aware of all support personnel needed to perform the TAB work. Maintain communication with the Contractor regarding support personnel throughout the duration of the TAB field work, including the TAB field acceptance testing checking.

Ensure all inspections and verifications for the Pre-Final DALT and Pre-TAB Checklists are completely and successfully conducted before DALT and TAB field work is performed.

g. Advance Notice: Monitor the completion of the duct system installations and provide the Advance Notice for Pre-Final DALT field work as specified herein.

h. Technical Assistance: Provide technical assistance to the DALT and TAB field work.

i. Deficiencies Notification: Ensure the notifications of Construction Deficiencies are provided as specified herein. Comply with requirements of the paragraph entitled "Construction Deficiencies." Resolve each deficiency as soon as practical and submit revised schedules and other required documentation.

j. Procedures: Develop the required TAB procedures for systems or system components not covered in the TAB Standard.

3. TAB Team Field Leader

a. Field manager: Manage, in the field, the accomplishment of the work specified in Part 3, "Execution."

b. Full time: Be present at the contract site when DALT field work or TAB field work is being performed by the TAB team; ensure day-to-day TAB team work accomplishments are in compliance with this section.

c. Prerequisite HVAC work: Do not bring the TAB team to the contract site until a copy of the prerequisite HVAC work list, with all work items certified by the Contractor to be working as designed, reaches the office of the TAB Agency.

Appendix B

REPORTS - DALT and TAB

All submitted documentation must be typed, neat, and organized. All reports must have a waterproof front and back cover, a title page, a certification page, sequentially numbered pages throughout, and a table of contents. Tables, lists, and diagrams must be titled. Generate and submit for approval the following documentation:

1. DALT and TAB Work Execution Schedule

Submit a detailed schedule indicating the anticipated calendar date for each submittal and each portion of work required under this section. For each work entry, indicate the support personnel (such as controls provider, HVAC mechanic, etc.) that are needed to accomplish the work. Arrange schedule entries chronologically.

2. DALT and TAB Procedures Summary

Submit a detailed narrative describing all aspects of the DALT and TAB field work to be performed. Clearly distinguish between DALT information and TAB information. Include the following:

a. A list of the intended procedural steps for the DALT and TAB field work from start to finish. Indicate how each type of data measurement will be obtained. Include what Contractor support personnel are required for each step, and the tasks they need to perform.

b. A list of the project's submittals that are needed by the TAB Firm in order to meet this Contract's requirements.

c. The schematic drawings to be used in the required reports, which may include building floor plans, mechanical room plans, duct system plans, and equipment elevations. Indicate intended TAB measurement locations, including where test ports need to be provided by the Contractor.

d. The data presentation forms to be used in the report, with the preliminary information and initial design values filled in.

e. A list of DALT and TAB instruments to be used, edited for this project, to include the instrument name and description, manufacturer, model number, scale range, published accuracy, most recent calibration date, and what the instrument will be used for on this project.

f. A thorough checklist of the work items and inspections that need to be accomplished before DALT field work can be performed. The Contractor must complete, submit, and receive approval of the Completed Pre-Final DALT Work Checklist before DALT field work can be accomplished.

g. A thorough checklist of the work items and inspections that need to be accomplished before the Season 1 TAB field work can be performed. The Contractor must complete, submit, and receive approval of the Completed Season 1 Pre-TAB Work Checklist before the Season 1 TAB field work can be accomplished.

h. A thorough checklist of the work items and inspections that need to be

accomplished before the Season 2 TAB field work can be performed. The Contractor must complete, submit, and receive approval of the Completed Season 2 Pre-TAB Work Checklist before the Season 2 TAB field work can be accomplished.

i. The checklists specified above shall be individually developed and tailored specifically for the work under this contract. Refer to NEBB PROCEDURAL STANDARDS, Section III, "Preliminary TAB Procedures" under the paragraphs titled, "Air Distribution System Inspection" and "Hydronic Distribution System Inspection" for examples of items to include in the checklists.

3. Design Review Report

Submit report containing the following information:

a. Review the contract specifications and drawings to verify that the TAB work can be successfully accomplished in compliance with the requirements of this section. Verify the presence and location of permanently installed test ports and other devices needed, including gauge cocks, thermometer wells, flow control devices, circuit setters, balancing valves, and manual volume dampers.

b. Submit a typed report describing omissions and deficiencies in the HVAC system's design that would preclude the TAB team from accomplishing the DALT work and the TAB work requirements of this section. Provide a complete explanation including supporting documentation detailing the design deficiency. If no deficiencies are evident, state so in the report.

4. Pre-Final DALT Report for COTR DALT Field Checks

Report the data for the Pre-Final DALT Report meeting the following requirements:

a. Submit a copy of the approved DALT and TAB Procedures Summary: Provide notations describing how actual field procedures differed from the procedures listed.

b. Report format: Submit a comprehensive report for the DALT field work data using data presentation forms equivalent to the "Air Duct Leakage Test Summary Report Forms" located in the SMACNA 1972 CD. In addition, submit in the report, a marked duct shop drawing which identifies each section of duct tested with assigned node numbers for each section. Node numbers shall be included in the completed report forms to identify each duct section.

c. Calculations: Include a copy of all calculations prepared in determining the duct surface area of each duct test section. Include in the DALT reports copy(s) of the calibration curve for each of the DALT test orifices used for testing.

d. Instruments: List the types of instruments actually used to measure the data. Include in the listing each instrument's unique identification number, calibration date, and calibration expiration date. Instruments are to be calibrated within one year of the date of use in the field; instrument calibration is to be traceable to the measuring standards of the National Institute of Standards and Technology.

e. TAB Supervisor Approval: Include on the submitted report the typed name of the TAB supervisor and the dated signature of the TAB supervisor.

5. Final DALT Report

On successful completion of all COTR field checks of the Pre-final DALT Report data for all systems, the TABS Supervisor shall assemble, review, sign and submit the Final DALT Report to the Contracting Officer for approval.

6. TAB Reports: Submit TAB Report for Season 1 and TAB Report for Season 2 in the following manner:

a. Procedure Summary: Submit a copy of the approved DALT and TAB Procedures Summary. When applicable, provide notations describing how actual field procedures differed from the procedures listed.

b. Report format: Submit the completed data forms approved in the pre-field TAB Engineering Report completed by TAB field team, reviewed, approved and signed by the TAB supervisor. Bind the report with a waterproof front and back cover. Include a table of contents identifying by page number the location of each report. Report forms and report data shall be typewritten. Handwritten report forms or report data are not acceptable.

c. Temperatures: On each TAB report form reporting TAB work accomplished on HVAC thermal energy transfer equipment, include the indoor and outdoor dry bulb temperature range and indoor and outdoor wet bulb temperature range within which the TAB data was recorded. Include in the TAB report continuous time versus temperature recording data of wet and dry bulb temperatures for the rooms, or zones, as designated in the following list:

Rooms 142, 111, and 145.

(1) Data shall be measured and compiled on a continuous basis for the period in which TAB work affecting those rooms is being done.

(2) Data shall be measured/recorded only after the HVAC systems installations are complete, the systems fully balanced and the HVAC systems controls operating in fully automatic mode. Provide a detailed explanation wherever a final measurement did not achieve the required value.

(3) Data may be compiled using direct digital controls trend logging where available. Otherwise, the Contractor shall temporarily install calibrated time versus temperature/humidity recorders for this purpose. The HVAC systems and controls shall have been fully operational a minimum of 24 hours in advance of commencing data compilation. The specified data shall be included in the Season I and Season 2 TAB Report.

d. Air System Diagrams: Provided updated diagrams with final installed locations of all terminals and devices, any numbering changes, and actual test locations.

e. Air Static Pressure Profiles: Report static pressure profiles for air

duct systems including: ERU-1. Report static pressure data for all supply, return, relief, exhaust and outside air ducts for the systems listed. The static pressure report data shall include, in addition to AABC or NEBB or TABB required data, the following:

(1) Report supply fan, return fan, relief fan, and exhaust fan inlet and discharge static pressures.

(2) Report static pressure drop across chilled water coils, DX coils, hot water coils, steam coils, electric resistance heating coils and heat reclaim devices installed in unit cabinetry or the system ductwork.

(3) Report static pressure drop across outside air, return air, and supply air automatic control dampers, both proportional and two-position, installed in unit cabinetry.

(4) Report static pressure drop across air filters, acoustic silencers, moisture eliminators, air flow straighteners, air flow measuring stations or other pressure drop producing specialty items installed in unit cabinetry, or in the system ductwork. Examples of these specialty items are smoke detectors, white sound generators, RF shielding, wave guides, security bars, blast valves, small pipes passing through ductwork, and duct mounted humidifiers.

Do not report static pressure drop across duct fittings provided for the sole purpose of conveying air, such as elbows, transitions, offsets, plenums, manual dampers, and branch takes-offs.

(5) Report static pressure drop across outside air and relief/exhaust air louvers.

(6) Report static pressure readings of supply air, return air, exhaust/relief air, and outside air in duct at the point where these ducts connect to each air moving unit.

f. Duct Transverses: Report duct traverses for main and branch main supply, return, exhaust, outside air ducts. This shall include all ducts, including those which lack 7 1/2 duct diameters upstream and 2 1/2 duct diameters downstream of straight duct unobstructed by duct fittings/offsets/elbows. The TAB Agency shall evaluate and report findings on the duct traverses taken. Evaluate the suitability of the duct traverse measurement based on satisfying the qualifications for a pitot traverse plane as defined by AMCA 203, "Field Measurements", Section 8, paragraph 8.3, "Location of Traverse Plane".

g. Instruments: List the types of instruments actually used to measure the tab data. Include in the listing each instrument's unique identification number, calibration date, and calibration expiration date.

Instrumentation, used for taking wet bulb temperature readings shall provide accuracy of plus or minus 5 percent at the measured face velocities. Submit instrument manufacturer's literature to document instrument accuracy performance is in compliance with that specified.

h. Performance Curves: The TAB Supervisor shall include, in the TAB

Reports, factory pump curves and fan curves for pumps and fans TAB'd on the job.

i. Calibration Curves: The TAB Supervisor shall include, in the TAB Reports, a factory calibration curve for installed flow control balancing valves, flow venturis and flow orifices TAB'd on the job.

j. Data From TAB Field Work: After completion of the TAB field work, prepare the TAB field data for TAB supervisor's review and approval signature, using the reporting forms approved in the pre-field engineering report. Data required by those approved data report forms shall be furnished by the TAB team. Except as approved otherwise in writing by the Contracting Officer, the TAB work and thereby the TAB report shall be considered incomplete until the TAB work is accomplished to within the accuracy range specified in the paragraph entitled "Workmanship."

Appendix C

DALT AND TAB SUBMITTAL AND WORK SCHEDULE

Perform the following items of work in the order listed adhering to the dates schedule specified below. Include the major items listed in this schedule in the project network analysis schedule required by Section 01 32 17.00 20 NETWORK ANALYSIS SCHEDULES (NAS).

Submit TAB Agency and TAB Personnel Qualifications: Within 42 calendar days after date of contract award.

Submit the DALT and TAB Work Execution Schedule: within 14 days after receipt of the TAB agency and TAB personnel qualifications approval. Revise and re-submit this schedule 28 days prior to commencement of DALT work and 28 days prior to the commencement of TAB Season 1 work and TAB Season 2 work.

Submit the DALT and TAB Work Procedures Summary: within 14 days after receipt of the initial approved DALT and TAB Work Execution Schedule.

Meet with the COTR at the Pre-DALT/TAB Meeting: Within 28 calendar days after receipt of the approved initial DALT/TAB Execution Schedule.

Submit Design Review Report: Within 56 calendar days after the receipt of the approved initial DALT and TAB Work Execution Schedule.

Advance Notice of Pre-Final DALT Field Work: After the completed installation of the HVAC duct system to be DALT'd, submit to the Contracting Officer an Advance Notice of Pre-Final DALT Field Work accompanied by the completed Pre-Final DALT Work Checklistchecklist for the subject duct system.

Ductwork Selected for DALT: Within 14 calendar days after receiving an acceptable completed Pre-Final DALT Work Checklist, the Contracting Officer's technical representative (COTR) will select the project ductwork sections to be DALT'd.

DALT Field Work: Within 48 hours of COTR's selection, complete DALT field work on selected project ductwork.

Submit Pre-Final DALT Report: Within two working days after completion of DALT field work, submit Pre-final DALT Report. Separate Pre-final DALT reports may be submitted to allow phased testing from system to system.

Quality Assurance - COTR DALT Field Checks: Upon approval of the Pre-final DALT Report, the COTR's DALT field check work shall be scheduled with the Contracting Officer.

Submit Final DALT Report: Within 14 calendar days after completion of successful DALT Work Field Check, submit Season 1 TAB report.

Advance Notice of Season 1 TAB Field Work: At a minimum of 14 calendar days prior to Season 1 TAB Field Work, submit advance notice of TAB field work accompanied by completed Season 1 Pre-TAB Work Checklist.

Season 1 TAB Field Work: At a minimum of 84 calendar days prior to CCD,

and when the ambient temperature is within Season 1 limits, accomplish Season 1 TAB field work.

Submit Season 1 TAB Report: Within 14 calendar days after completion of Season 1 TAB field work, submit initial Season 1 TAB report.

Season 1 Quality Assurance - COTR TAB Field Check: 30 calendar days after initial Season 1 TAB report is approved by the Contracting Officer, conduct Season 1 field check.

Complete Season 1 TAB Work: Prior to CCD, complete all TAB work except Season 2 TAB work and submit final.

Receive the approved TAB report: Within 21 calendar days, receive the report from Contracting Officer approved TAB report.

Advance Notice of Season 2 TAB Field Work: At a minimum of 126calendar days after CCD, submit advance notice of Season 2 TAB field work accompanied by completed Season 2 Pre-TAB Work Checklist.

Season 2 TAB Field Work: Within 14 calendar days after date of advance notice of Season 2 TAB field work and when the ambient temperature is within Season 2 limits, accomplish Season 2 TAB field work.

Submit Season 2 TAB Report: Within 14 calendar days after completion of Season 2 TAB field work, submit Season 2 TAB report.

Season 2 Quality Assurance - COTR TAB Field Checks: 28 calendar days after the Season 2 TAB report is approved by the Contracting Officer, conduct Season 2 field check.

Complete Season 2 TAB Work: Within 14 calendar days after the completion of Season 2 TAB field data check, complete all TAB work.

Receive the approved TAB report: Within calendar 21 days, receive the report from Contracting Officer.

Appendix D

REQUIREMENTS FOR DUCT AIR LEAK TESTING

		SYSTEMS ERU-1 ERU-2
Duct System Static Pressure, in inches W.C.	for Supply	2
	for Return	1
	for Exhaust	2
	for Outside Air	1
System Oval/Round Duct and Rectangular Duct SMACNA Seal Class	for Supply	A
	for Return	A
	for Exhaust	A
	for Outside Air	A
System Oval/Round Duct SMACNA Leak Class	for Supply	6
	for Return	12
	for Exhaust	6
	for Outside Air	12

Appendix D

REQUIREMENTS FOR DUCT AIR LEAK TESTING

		SYSTEMS ERU-1 ERU-2
System Rectangular Duct SMACNA Leak Class	for Supply	12
	for Return	24
	for Exhaust	12
	for Outside Air	24
Duct Test Pressure, in inches W.C.	for Supply	4
	for Return	2
	for Exhaust	2
	for Outside Air	2

Appendix D

REQUIREMENTS FOR DUCT AIR LEAK TESTING

		SYSTEMS	
		AC-X	EF-X
Duct System Static Pressure, in millimeters W.C.	for Supply	1	
	for Return	1	
	for Exhaust		1
System Oval/Round Duct and Rectangular Duct SMACNA Seal Class	for Supply	A	A
	for Return	A	A
	for Exhaust	A	A
	for Outside Air	A	A
System Oval/Round Duct SMACNA Leak Class	for Supply	12	n/a
	for Return	12	n/a
	for Exhaust	n/a	12
	for Outside Air	n/a	n/a

Appendix D

REQUIREMENTS FOR DUCT AIR LEAK TESTING

		SYSTEMS	
		AC-X	EF-X
System Rectangular Duct SMACNA Leak Class	for Supply	24	n/a
	for Return	24	n/a
	for Exhaust	n/a	24
	for Outside Air	n/a	n/a
Duct Test Pressure, in inches W.C.	for Supply	1	n/a
	for Return	1	n/a
	for Exhaust	n/a	1
	for Outside Air	n/a	n/a

-- End of Section --

SECTION 23 07 00

THERMAL INSULATION FOR MECHANICAL SYSTEMS
02/13

PART 1 GENERAL

1.1 REFERENCES

The publications listed below form a part of this specification to the extent referenced. The publications are referred to within the text by the basic designation only. At the discretion of the Government, the manufacturer of any material supplied will be required to furnish test reports pertaining to any of the tests necessary to assure compliance with the standard or standards referenced in this specification.

AMERICAN SOCIETY OF HEATING, REFRIGERATING AND AIR-CONDITIONING ENGINEERS (ASHRAE)

ASHRAE 90.1 - IP	(2010; Errata 1-4 2011; INT 1-12 2011; Addenda A, B, C, G, H, J, K, O, P, S, Y, Z, BZ, CG, CI and DS 2012; Errata 5-9 2012; INT 13-16 2012; Errata 10-12 2013; INT 17-18 2013) Energy Standard for Buildings Except Low-Rise Residential Buildings

ASTM INTERNATIONAL (ASTM)

ASTM A167	(2011) Standard Specification for Stainless and Heat-Resisting Chromium-Nickel Steel Plate, Sheet, and Strip
ASTM A580/A580M	(2013b) Standard Specification for Stainless Steel Wire
ASTM B209	(2014) Standard Specification for Aluminum and Aluminum-Alloy Sheet and Plate
ASTM C1136	(2012) Standard Specification for Flexible, Low Permeance Vapor Retarders for Thermal Insulation
ASTM C1290	(2011) Standard Specification for Flexible Fibrous Glass Blanket Insulation Used to Externally Insulate HVAC Ducts
ASTM C1710	(2011) Standard Guide for Installation of Flexible Closed Cell Preformed Insulation in Tube and Sheet Form
ASTM C195	(2007; R 2013) Standard Specification for Mineral Fiber Thermal Insulating Cement
ASTM C450	(2008) Standard Practice for Fabrication of Thermal Insulating Fitting Covers for

	NPS Piping, and Vessel Lagging
ASTM C534/C534M	(2013) Standard Specification for Preformed Flexible Elastomeric Cellular Thermal Insulation in Sheet and Tubular Form
ASTM C547	(2012) Standard Specification for Mineral Fiber Pipe Insulation
ASTM C552	(2013) Standard Specification for Cellular Glass Thermal Insulation
ASTM C585	(2010) Standard Practice for Inner and Outer Diameters of Thermal Insulation for Nominal Sizes of Pipe and Tubing
ASTM C612	(2014) Mineral Fiber Block and Board Thermal Insulation
ASTM C647	(2008; R 2013) Properties and Tests of Mastics and Coating Finishes for Thermal Insulation
ASTM C795	(2008; R 2013) Standard Specification for Thermal Insulation for Use in Contact with Austenitic Stainless Steel
ASTM C916	(1985; R 2007) Standard Specification for Adhesives for Duct Thermal Insulation
ASTM C920	(2014a) Standard Specification for Elastomeric Joint Sealants
ASTM C921	(2010) Standard Practice for Determining the Properties of Jacketing Materials for Thermal Insulation
ASTM D2863	(2013) Measuring the Minimum Oxygen Concentration to Support Candle-Like Combustion of Plastics (Oxygen Index)
ASTM D5590	(2000; R 2010; E 2012) Standard Test Method for Determining the Resistance of Paint Films and Related Coatings to Fungal Defacement by Accelerated Four-Week Agar Plate Assay
ASTM D882	(2012) Tensile Properties of Thin Plastic Sheeting
ASTM E2231	(2009) Specimen Preparation and Mounting of Pipe and Duct Insulation Materials to Assess Surface Burning Characteristics
ASTM E84	(2015b) Standard Test Method for Surface Burning Characteristics of Building Materials

ASTM E96/E96M	(2014) Standard Test Methods for Water Vapor Transmission of Materials

FM GLOBAL (FM)

FM APP GUIDE	(updated on-line) Approval Guide http://www.approvalguide.com/

MANUFACTURERS STANDARDIZATION SOCIETY OF THE VALVE AND FITTINGS INDUSTRY (MSS)

MSS SP-69	(2003; Notice 2012) Pipe Hangers and Supports - Selection and Application (ANSI Approved American National Standard)

NATIONAL FIRE PROTECTION ASSOCIATION (NFPA)

NFPA 90A	(2015) Standard for the Installation of Air Conditioning and Ventilating Systems
NFPA 90B	(2012) Standard for the Installation of Warm Air Heating and Air Conditioning Systems

TECHNICAL ASSOCIATION OF THE PULP AND PAPER INDUSTRY (TAPPI)

TAPPI T403 OM	(2010) Bursting Strength of Paper

U.S. DEPARTMENT OF DEFENSE (DOD)

MIL-A-24179	(1969; Rev A; Am 2 1980; Notice 1 1987) Adhesive, Flexible Unicellular-Plastic Thermal Insulation
MIL-A-3316	(1987; Rev C; Am 2 1990) Adhesives, Fire-Resistant, Thermal Insulation
MIL-PRF-19565	(1988; Rev C) Coating Compounds, Thermal Insulation, Fire- and Water-Resistant, Vapor-Barrier

UNDERWRITERS LABORATORIES (UL)

UL 723	(2008; Reprint Aug 2013) Test for Surface Burning Characteristics of Building Materials
UL 94	(2013; Reprint Jul 2015) Standard for Tests for Flammability of Plastic Materials for Parts in Devices and Appliances

1.2 SYSTEM DESCRIPTION

1.2.1 General

Provide field-applied insulation and accessories on mechanical systems as specified herein; factory-applied insulation is specified under the piping, duct or equipment to be insulated. Field applied insulation materials

required for use on Government-furnished items as listed in the SPECIAL CONTRACT REQUIREMENTS shall be furnished and installed by the Contractor.

1.2.2 Recycled Materials

Provide thermal insulation containing recycled materials to the extent practicable, provided that the materials meet all other requirements of this section. The minimum recycled material content of the following insulation are:

Rock Wool	75 percent slag of weight
Fiberglass	20-25 percent glass cullet by weight
Rigid Foam	9 percent recovered material

1.3 SUBMITTALS

Government approval is required for submittals with a "G" designation; submittals not having a "G" designation are for Contractor Quality Control approval. Submit the following in accordance with Section 01 33 00 SUBMITTAL PROCEDURES:

Submit the two SD types, SD-03 Product Data, and SD-08 Manufacturer's Instructions at the same time for each system.

SD-03 Product Data

Pipe Insulation Systems; G
Duct Insulation Systems; G

SD-08 Manufacturer's Instructions

Pipe Insulation Systems; G
Duct Insulation Systems; G

1.4 QUALITY ASSURANCE

1.4.1 Installer Qualification

Qualified installers shall have successfully completed three or more similar type jobs within the last 5 years.

1.5 DELIVERY, STORAGE, AND HANDLING

Materials shall be delivered in the manufacturer's unopened containers. Materials delivered and placed in storage shall be provided with protection from weather, humidity, dirt, dust and other contaminants. The Contracting Officer may reject insulation material and supplies that become dirty, dusty, wet, or contaminated by some other means. Packages or standard containers of insulation, jacket material, cements, adhesives, and coatings delivered for use, and samples required for approval shall have manufacturer's stamp or label attached giving the name of the manufacturer and brand, and a description of the material, date codes, and approximate shelf life (if applicable). Insulation packages and containers shall be asbestos free.

PART 2 PRODUCTS

2.1 STANDARD PRODUCTS

Provide materials which are the standard products of manufacturers regularly engaged in the manufacture of such products and that essentially duplicate items that have been in satisfactory use for at least 2 years prior to bid opening. Submit a complete list of materials, including manufacturer's descriptive technical literature, performance data, catalog cuts, and installation instructions. The product number, k-value, thickness and furnished accessories including adhesives, sealants and jackets for each mechanical system requiring insulation shall be included. The product data must be copyrighted, have an identifying or publication number, and shall have been published prior to the issuance date of this solicitation. Materials furnished under this section shall be submitted together in a booklet.

2.1.1 Surface Burning Characteristics

Unless otherwise specified, insulation shall have a maximum flame spread index of 25 and a maximum smoke developed index of 50 when tested in accordance with ASTM E84. Flame spread, and smoke developed indexes, shall be determined by ASTM E84 or UL 723. Insulation shall be tested in the same density and installed thickness as the material to be used in the actual construction. Test specimens shall be prepared and mounted according to ASTM E2231.

2.2 MATERIALS

Provide insulation that meets or exceed the requirements of ASHRAE 90.1 - IP. Insulation exterior shall be cleanable, grease resistant, non-flaking and non-peeling. Materials shall be compatible and shall not contribute to corrosion, soften, or otherwise attack surfaces to which applied in either wet or dry state. Materials to be used on stainless steel surfaces shall meet ASTM C795 requirements. Calcium silicate shall not be used on chilled or cold water systems. Materials shall be asbestos free. Provide product recognized under UL 94 (if containing plastic) and listed in FM APP GUIDE.

2.2.1 Adhesives

2.2.1.1 Acoustical Lining Insulation Adhesive

Adhesive shall be a nonflammable, fire-resistant adhesive conforming to ASTM C916, Type I.

2.2.1.2 Mineral Fiber Insulation Cement

Cement shall be in accordance with ASTM C195.

2.2.1.3 Lagging Adhesive

Lagging is the material used for insulating around a cylindrical object. This may include the insulation as well as the cloth/material covering the insulation. To resist mold/mildew, lagging adhesive shall meet ASTM D5590 with 0 growth rating. Lagging adhesives shall be nonflammable and fire-resistant and shall have a maximum flame spread index of 25 and a maximum smoke developed index of 50 when tested in accordance with ASTM E84. Adhesive shall be MIL-A-3316, Class 1, pigmented white and be suitable for bonding fibrous glass cloth to faced and unfaced fibrous glass insulation

board; for bonding cotton brattice cloth to faced and unfaced fibrous glass insulation board; for sealing edges of and bonding glass tape to joints of fibrous glass board; for bonding lagging cloth to thermal insulation; or Class 2 for attaching fibrous glass insulation to metal surfaces. Lagging adhesives shall be applied in strict accordance with the manufacturer's recommendations for pipe and duct insulation.

2.2.1.4 Contact Adhesive

Adhesives may be any of, but not limited to, the neoprene based, rubber based, or elastomeric type that have a maximum flame spread index of 25 and a maximum smoke developed index of 50 when tested in accordance with ASTM E84. The adhesive shall not adversely affect, initially or in service, the insulation to which it is applied, nor shall it cause any corrosive effect on metal to which it is applied. Any solvent dispersing medium or volatile component of the adhesive shall have no objectionable odor and shall not contain any benzene or carbon tetrachloride. The dried adhesive shall not emit nauseous, irritating, or toxic volatile matters or aerosols when the adhesive is heated to any temperature up to 212 degrees F. The dried adhesive shall be nonflammable and fire resistant. Flexible Elastomeric Adhesive: Comply with MIL-A-24179, Type II, Class I. Provide product listed in FM APP GUIDE.

2.2.2 Caulking

ASTM C920, Type S, Grade NS, Class 25, Use A.

2.2.3 Corner Angles

Nominal 0.016 inch aluminum 1 by 1 inch with factory applied kraft backing. Aluminum shall be ASTM B209, Alloy 3003, 3105, or 5005.

2.2.4 Fittings

Fabricated Fittings are the prefabricated fittings for flexible elastomeric pipe insulation systems in accordance with ASTM C1710. Together with the flexible elastomeric tubes, they provide complete system integrity for retarding heat gain and controlling condensation drip from chilled-water and refrigeration systems. Flexible elastomeric, fabricated fittings provide thermal protection (0.25 k) and condensation resistance (0.05 Water Vapor Transmission factor). For satisfactory performance, properly installed protective vapor retarder/barriers and vapor stops shall be used on high relative humidity and below ambient temperature applications to reduce movement of moisture through or around the insulation to the colder interior surface.

2.2.5 Finishing Cement

ASTM C450: Mineral fiber hydraulic-setting thermal insulating and finishing cement. All cements that may come in contact with Austenitic stainless steel must comply with ASTM C795.

2.2.6 Fibrous Glass Cloth and Glass Tape

Fibrous glass cloth, with 20X20 maximum mesh size, and glass tape shall have maximum flame spread index of 25 and a maximum smoke developed index of 50 when tested in accordance with ASTM E84. Tape shall be 4 inch wide rolls. Class 3 tape shall be 4.5 ounces/square yard. Elastomeric Foam Tape: Black vapor-retarder foam tape with acrylic adhesive containing an

anti-microbial additive.

2.2.7 Staples

Outward clinching type ASTM A167, Type 304 or 316 stainless steel.

2.2.8 Jackets

2.2.8.1 Aluminum Jackets

Aluminum jackets shall be corrugated, embossed or smooth sheet, 0.016 inch nominal thickness; ASTM B209, Temper H14, Temper H16, Alloy 3003, 5005, or 3105. Corrugated aluminum jacket shall not be used outdoors. Aluminum jacket securing bands shall be Type 304 stainless steel, 0.015 inch thick, 1/2 inch wide for pipe under 12 inch diameter and 3/4 inch wide for pipe over 12 inch and larger diameter. Aluminum jacket circumferential seam bands shall be 2 by 0.016 inch aluminum matching jacket material. Bands for insulation below ground shall be 3/4 by 0.020 inch thick stainless steel, or fiberglass reinforced tape. The jacket may, at the option of the Contractor, be provided with a factory fabricated Pittsburgh or "Z" type longitudinal joint. When the "Z" joint is used, the bands at the circumferential joints shall be designed by the manufacturer to seal the joints and hold the jacket in place.

2.2.8.2 Polyvinyl Chloride (PVC) Jackets

Polyvinyl chloride (PVC) jacket and fitting covers shall have high impact strength, ultraviolet (UV) resistant rating or treatment and moderate chemical resistance with minimum thickness 0.030 inch.

2.2.8.3 Vapor Barrier/Weatherproofing Jacket

Vapor barrier/weatherproofing jacket shall be laminated self-adhesive, greater than 3 plies standard grade, silver, white, black and embossed or greater than 8 ply (minimum 2.9 mils adhesive); with 0.0000 permeability when tested in accordance with ASTM E96/E96M, using the water transmission rate test method; heavy duty, white or natural; and UV resistant. Flexible Elastomeric exterior foam with factory applied, UV Jacket made with a cold weather acrylic adhesive. Construction of laminate designed to provide UV resistance, high puncture, tear resistance and excellent Water Vapor Transmission (WVT) rate.

2.2.8.4 Vapor Barrier/Vapor Retarder

Apply the following criteria to determine which system is required.

a. On ducts, piping and equipment operating below 95 degrees F or located outside shall be equipped with a vapor barrier.

b. Ducts, pipes and equipment that are located inside and that always operate above 95 degrees F shall be installed with a vapor retarder where required as stated in paragraph VAPOR RETARDER REQUIRED.

2.2.9 Vapor Retarder Required

ASTM C921, Type I, minimum puncture resistance 50 Beach units on all surfaces except concealed ductwork, where a minimum puncture resistance of 25 Beach units is acceptable. Minimum tensile strength, 35 pounds/inch width. ASTM C921, Type II, minimum puncture resistance 25 Beach units,

tensile strength minimum 20 pounds/inch width. Jackets used on insulation exposed in finished areas shall have white finish suitable for painting without sizing. Based on the application, insulation materials that require manufacturer or fabricator applied pipe insulation jackets are cellular glass, when all joints are sealed with a vapor barrier mastic, and mineral fiber. All non-metallic jackets shall have a maximum flame spread index of 25 and a maximum smoke developed index of 50 when tested in accordance with ASTM E84. Flexible elastomerics require (in addition to vapor barrier skin) vapor retarder jacketing for high relative humidity and below ambient temperature applications.

2.2.9.1 White Vapor Retarder All Service Jacket (ASJ)

ASJ is for use on hot/cold pipes, ducts, or equipment indoors or outdoors if covered by a suitable protective jacket. The product shall meet all physical property and performance requirements of ASTM C1136, Type I, except the burst strength shall be a minimum of 85 psi. ASTM D2863 Limited Oxygen Index (LOI) shall be a minimum of 31.

In addition, neither the outer exposed surface nor the inner-most surface contacting the insulation shall be paper or other moisture-sensitive material. The outer exposed surface shall be white and have an emittance of not less than 0.80. The outer exposed surface shall be paintable.

2.2.9.2 Vapor Retarder/Vapor Barrier Mastic Coatings

2.2.9.2.1 Vapor Barrier

The vapor barrier shall be self adhesive (minimum 2 mils adhesive, 3 mils embossed) greater than 3 plies standard grade, silver, white, black and embossed white jacket for use on hot/cold pipes. Permeability shall be less than 0.02 when tested in accordance with ASTM E96/E96M. Products shall meet UL 723 or ASTM E84 flame and smoke requirements and shall be UV resistant.

2.2.9.2.2 Vapor Retarder

The vapor retarder coating shall be fire and water resistant and appropriately selected for either outdoor or indoor service. Color shall be white. The water vapor permeance of the compound shall be 0.013 perms or less at 43 mils dry film thickness as determined according to procedure B of ASTM E96/E96M utilizing apparatus described in ASTM E96/E96M. The coating shall be nonflammable, fire resistant type. To resist mold/mildew, coating shall meet ASTM D5590 with 0 growth rating. Coating shall meet MIL-PRF-19565 Type II (if selected for indoor service) and be Qualified Products Database listed. All other application and service properties shall be in accordance with ASTM C647.

2.2.9.3 Laminated Film Vapor Retarder

ASTM C1136, Type I, maximum moisture vapor transmission 0.02 perms, minimum puncture resistance 50 Beach units on all surfaces except concealed ductwork; where Type II, maximum moisture vapor transmission 0.02 perms, a minimum puncture resistance of 25 Beach units is acceptable. Vapor retarder shall have a maximum flame spread index of 25 and a maximum smoke developed index of 50 when tested in accordance with ASTM E84. Flexible Elastomeric exterior foam with factory applied UV Jacket. Construction of laminate designed to provide UV resistance, high puncture, tear resistance and an excellent WVT rate.

2.2.9.4 Polyvinylidene Chloride (PVDC) Film Vapor Retarder

The PVDC film vapor retarder shall have a maximum moisture vapor transmission of 0.02 perms, minimum puncture resistance of 150 Beach units, a minimum tensile strength in any direction of 30 lb/inch when tested in accordance with ASTM D882, and a maximum flame spread index of 25 and a maximum smoke developed index of 50 when tested in accordance with ASTM E84.

2.2.9.5 Polyvinylidene Chloride Vapor Retarder Adhesive Tape

Requirements must meet the same as specified for Laminated Film Vapor Retarder above.

2.2.9.6 Vapor Barrier/Weather Barrier

The vapor barrier shall be greater than 3 ply self adhesive laminate -white vapor barrier jacket- superior performance (less than 0.0000 permeability when tested in accordance with ASTM E96/E96M). Vapor barrier shall meet UL 723 or ASTM E84 25 flame and 50 smoke requirements; and UV resistant. Minimum burst strength 185 psi in accordance with TAPPI T403 OM . Tensile strength 68 lb/inch width (PSTC-1000). Tape shall be as specified for laminated film vapor barrier above.

2.2.10 Vapor Retarder Not Required

ASTM C921, Type II, Class D, minimum puncture resistance 50 Beach units on all surfaces except ductwork, where Type IV, maximum moisture vapor transmission 0.10, a minimum puncture resistance of 25 Beach units is acceptable. Jacket shall have a maximum flame spread index of 25 and a maximum smoke developed index of 50 when tested in accordance with ASTM E84.

2.2.11 Wire

Soft annealed ASTM A580/A580M Type 302, 304 or 316 stainless steel, 16 or 18 gauge.

2.2.12 Insulation Bands

Insulation bands shall be 1/2 inch wide; 26 gauge stainless steel.

2.2.13 Sealants

Sealants shall be chosen from the butyl polymer type, the styrene-butadiene rubber type, or the butyl type of sealants. Sealants shall have a maximum permeance of 0.02 perms based on Procedure B for ASTM E96/E96M, and a maximum flame spread index of 25 and a maximum smoke developed index of 50 when tested in accordance with ASTM E84.

2.3 PIPE INSULATION SYSTEMS

Insulation materials shall conform to Table 1. Insulation thickness shall be as listed in Table 2 and meet or exceed the requirements of ASHRAE 90.1 - IP. Insulation thickness shall be 1inch. Comply with EPA requirements in accordance with Section 01 33 29 Sustainability Reporting. Pipe insulation materials shall be limited to those listed herein and shall meet the following requirements:

2.3.1 Aboveground Cold Pipeline (-30 to 60 deg. F)

Insulation for outdoor, indoor, exposed or concealed applications, shall be as follows:

2.3.1.1 Cellular Glass

ASTM C552, Type II, and Type III. Supply the insulation from the fabricator with (paragraph WHITE VAPOR RETARDER ALL SERVICE JACKET (ASJ)) ASJ vapor retarder and installed with all longitudinal overlaps sealed and all circumferential joints ASJ taped or supply the insulation unfaced from the fabricator and install with all longitudinal and circumferential joints sealed with vapor barrier mastic.

2.3.2 Aboveground Hot Pipeline (Above 60 deg. F)

Insulation for outdoor, indoor, exposed or concealed applications shall meet the following requirements. Supply the insulation with manufacturer's recommended factory-applied jacket/vapor barrier.

2.3.2.1 Mineral Fiber

ASTM C547, Types I, II or III, supply the insulation with manufacturer's recommended factory-applied jacket.

2.4 DUCT INSULATION SYSTEMS

2.4.1 Factory Applied Insulation

Provide factory-applied ASTM C552, cellular glass thermal insulation according to manufacturer's recommendations for insulation with insulation manufacturer's standard reinforced fire-retardant vapor barrier, with identification of installed thermal resistance (R) value and out-of-package R value.

2.4.1.1 Rigid Insulation

Rigid mineral fiber in accordance with ASTM C612, Class 2 (maximum surface temperature 400 degrees F), 3 pcf average, 1-1/2 inch thick, Type IA, IB, II, III, and IV. Alternately, minimum thickness may be calculated in accordance with ASHRAE 90.1 - IP.

2.4.1.2 Blanket Insulation

Blanket flexible mineral fiber insulation conforming to ASTM C585, Type 1, Class B-3, 3/4 pcf nominal, 2.0 inches thick or Type II up to 250 degrees F. Also ASTM C1290 Type III may be used. Alternately, minimum thickness may be calculated in accordance with ASHRAE 90.1 - IP.

2.4.2 Acoustical Duct Lining (Transfer Ductwork Only)

2.4.2.1 General

For ductwork indicated or specified in Section 23 00 00 AIR SUPPLY, DISTRIBUTION, VENTILATION, AND EXHAUST SYSTEM to be acoustically lined, provide acoustical duct lining. Do not use acoustical lining in place of duct wrap or rigid board insulation (insulation on the exterior of the duct).

2.4.2.2 Duct Liner

Flexible Elastomeric Acoustical and Conformable Duct Liner Materials: Flexible Elastomeric Thermal, Acoustical and Conformable Insulation Compliance with ASTM C534/C534M Grade 1, Type II; and NFPA 90A or NFPA 90B as applicable.

2.4.3 Duct Insulation Jackets

2.4.3.1 All-Purpose Jacket

Provide insulation with insulation manufacturer's standard reinforced fire-retardant jacket with or without integral vapor barrier as required by the service. In exposed locations, provide jacket with a white surface suitable for field painting.

2.4.3.2 Metal Jackets

2.4.3.2.1 Aluminum Jackets

ASTM B209, Temper H14, minimum thickness of 27 gauge (0.016 inch), with factory-applied polyethylene and kraft paper moisture barrier on inside surface. Provide smooth surface jackets for jacket outside dimension 8 inches and larger. Provide corrugated surface jackets for jacket outside dimension 8 inches and larger. Provide stainless steel bands, minimum width of 1/2 inch.

2.4.3.3 Vapor Barrier/Weatherproofing Jacket

Vapor barrier/weatherproofing jacket shall be laminated self-adhesive (minimum 2 mils adhesive, 3 mils embossed) less than 0.0000 permeability, (greater than 3 ply, standard grade, silver, white, black and embossed or greater than 8 ply (minimum 2.9 mils adhesive), heavy duty white or natural).

2.5 EQUIPMENT INSULATION SYSTEMS

Insulate equipment and accessories as specified in Tables 5 and 6. In outside locations, provide insulation 1/2 inch thicker than specified. Increase the specified insulation thickness for equipment where necessary to equal the thickness of angles or other structural members to make a smooth, exterior surface. Submit a booklet containing manufacturer's published installation instructions for the insulation systems. The instructions must be copyrighted, have an identifying or publication number, and shall have been published prior to the issuance date of this solicitation. A booklet is also required by paragraphs titled: Pipe Insulation Systems and Duct Insulation Systems.

PART 3 EXECUTION

3.1 APPLICATION - GENERAL

Insulation shall only be applied to unheated and uncooled piping and equipment. Flexible elastomeric cellular insulation shall not be compressed at joists, studs, columns, ducts, hangers, etc. The insulation shall not pull apart after a one hour period; any insulation found to pull apart after one hour, shall be replaced.

3.1.1 Installation

Except as otherwise specified, material shall be installed in accordance with the manufacturer's written instructions. Insulation materials shall not be applied until tests specified in other sections of this specification are completed. Material such as rust, scale, dirt and moisture shall be removed from surfaces to receive insulation. Insulation shall be kept clean and dry. Insulation shall not be removed from its shipping containers until the day it is ready to use and shall be returned to like containers or equally protected from dirt and moisture at the end of each workday. Insulation that becomes dirty shall be thoroughly cleaned prior to use. If insulation becomes wet or if cleaning does not restore the surfaces to like new condition, the insulation will be rejected, and shall be immediately removed from the jobsite. Joints shall be staggered on multi layer insulation. Mineral fiber thermal insulating cement shall be mixed with demineralized water when used on stainless steel surfaces.

3.1.2 Firestopping

Where pipes and ducts pass through fire walls, fire partitions, above grade floors, and fire rated chase walls, the penetration shall be sealed with fire stopping materials as specified in Section 07 84 00 FIRESTOPPING. The protection of ducts at point of passage through firewalls must be in accordance with NFPA 90A and/or NFPA 90B. All other penetrations, such as piping, conduit, and wiring, through firewalls must be protected with a material or system of the same hourly rating that is listed by UL, FM, or a NRTL.

3.1.3 Painting and Finishing

Painting shall be as specified in Section 09 90 00 PAINTS AND COATINGS.

3.1.4 Installation of Flexible Elastomeric Cellular Insulation

Install flexible elastomeric cellular insulation with seams and joints sealed with rubberized contact adhesive. Flexible elastomeric cellular insulation shall not be used on surfaces greater than 220 degrees F. Stagger seams when applying multiple layers of insulation. Protect insulation exposed to weather and not shown to have vapor barrier weatherproof jacketing with two coats of UV resistant finish or PVC or metal jacketing as recommended by the manufacturer after the adhesive is dry and cured.

3.1.4.1 Adhesive Application

Apply a brush coating of adhesive to both butt ends to be joined and to both slit surfaces to be sealed. Allow the adhesive to set until dry to touch but tacky under slight pressure before joining the surfaces. Insulation seals at seams and joints shall not be capable of being pulled apart one hour after application. Insulation that can be pulled apart one hour after installation shall be replaced.

3.1.4.2 Adhesive Safety Precautions

Use natural cross-ventilation, local (mechanical) pickup, and/or general area (mechanical) ventilation to prevent an accumulation of solvent vapors, keeping in mind the ventilation pattern must remove any heavier-than-air solvent vapors from lower levels of the workspaces. Gloves and spectacle-type safety glasses are recommended in accordance with safe

installation practices.

3.1.5 Welding

No welding shall be done on piping, duct or equipment without written approval of the Contracting Officer. The capacitor discharge welding process may be used for securing metal fasteners to duct.

3.1.6 Pipes/Ducts/Equipment That Require Insulation

Insulation is required on all pipes, ducts, or equipment, except for omitted items as specified.

3.2 PIPE INSULATION SYSTEMS INSTALLATION

3.2.1 Pipe Insulation

3.2.1.1 General

Pipe insulation shall be installed on aboveground hot and cold pipeline systems as specified below to form a continuous thermal retarder/barrier, including straight runs, fittings and appurtenances unless specified otherwise. Installation shall be with full length units of insulation and using a single cut piece to complete a run. Cut pieces or scraps abutting each other shall not be used. Pipe insulation shall be omitted on the following:

a. Pipe used solely for fire protection.

b. Chromium plated pipe to plumbing fixtures. However, fixtures for use by the physically handicapped shall have the hot water supply and drain, including the trap, insulated where exposed.

c. Sanitary drain lines.

d. Air chambers.

e. Adjacent insulation.

f. ASME stamps.

g. Access plates of fan housings.

h. Cleanouts or handholes.

3.2.1.2 Pipes Passing Through Walls, Roofs, and Floors

Pipe insulation shall be continuous through the sleeve.

An aAluminum jacket or vapor barrier/weatherproofingJacket or Vapor Barrier/Weatherproofing - self adhesive jacket (minimum 2 mils adhesive, 3 mils embossed) less than 0.0000 permeability, greater than 3 ply standard grade, silver, white, black and embossed with factory applied moisture retarder shall be provided over the insulation wherever penetrations require sealing.

3.2.1.2.1 Penetrate Interior Walls

The aluminum jacket or vapor barrier/weatherproofing - self adhesive jacket

(minimum 2 mils adhesive, 3 mils embossed) less than 0.0000 permeability, greater than 3 plies standard grade, silver, white, black and embossed shall extend 2 inches beyond either side of the wall and shall be secured on each end with a band.

3.2.1.2.2 Penetrating Floors

Extend the aluminum jacket from a point below the backup material to a point 10 inches above the floor with one band at the floor and one not more than 1 inch from the end of the aluminum jacket.

3.2.1.2.3 Penetrating Waterproofed Floors

Extend the aluminum jacket rom below the backup material to a point 2 inches above the flashing with a band 1 inch from the end of the aluminum jacket.

3.2.1.2.4 Penetrating Exterior Walls

Continue the aluminum jacket required for pipe exposed to weather through the sleeve to a point 2 inches beyond the interior surface of the wall.

3.2.1.2.5 Penetrating Roofs

Insulate pipe as required for interior service to a point flush with the top of the flashing and sealed with flashing sealant. Tightly butt the insulation for exterior application to the top of flashing and interior insulation. Extend the exterior aluminum jacket 2 inches down beyond the end of the insulation to form a counter flashing. Seal the flashing and counter flashing underneath with metal jacketing/flashing sealant.

3.2.1.2.6 Hot Water Pipes Supplying Lavatories or Other Similar Heated Service

Terminate the insulation on the backside of the finished wall. Protect the insulation termination with two coats of vapor barrier coating with a minimum total thickness of 1/16 inch applied with glass tape embedded between coats (if applicable). Extend the coating out onto the insulation 2 inches and seal the end of the insulation. Overlap glass tape seams 1 inch. Caulk the annular space between the pipe and wall penetration with approved fire stop material. Cover the pipe and wall penetration with a properly sized (well fitting) escutcheon plate. The escutcheon plate shall overlap the wall penetration at least 3/8 inches.

3.2.1.2.7 Domestic Cold Water Pipes Supplying Lavatories or Other Similar Cooling Service

Terminate the insulation on the finished side of the wall (i.e., insulation must cover the pipe throughout the wall penetration). Protect the insulation with two coats of weather barrier mastic (breather emulsion type weatherproof mastic impermeable to water and permeable to air) with a minimum total thickness of 1/16 inch. Extend the mastic out onto the insulation 2 inches and shall seal the end of the insulation. The annular space between the outer surface of the pipe insulation and caulk the wall penetration with an approved fire stop material having vapor retarder properties. Cover the pipe and wall penetration with a properly sized (well fitting) escutcheon plate. The escutcheon plate shall overlap the wall penetration by at least 3/8 inches.

3.2.1.3 Pipes Passing Through Hangers

Insulation, whether hot or cold application, shall be continuous through hangers. All horizontal pipes 2 inches and smaller shall be supported on hangers with the addition of a Type 40 protection shield to protect the insulation in accordance with MSS SP-69. Whenever insulation shows signs of being compressed, or when the insulation or jacket shows visible signs of distortion at or near the support shield, insulation inserts as specified below for piping larger than 2 inches shall be installed, or factory insulated hangers (designed with a load bearing core) can be used.

3.2.1.3.1 Horizontal Pipes Larger Than 2 Inches at 60 Degrees F and Above

Supported on hangers in accordance with MSS SP-69, and Section 22 00 00 PLUMBING, GENERAL PURPOSE.

3.2.1.3.2 Horizontal Pipes Larger Than 2 Inches and Below 60 Degrees F

Supported on hangers with the addition of a Type 40 protection shield in accordance with MSS SP-69. An insulation insert of cellular glass, prefabricated insulation pipe hangers, or perlite above 80 degrees F shall be installed above each shield. The insert shall cover not less than the bottom 180-degree arc of the pipe. Inserts shall be the same thickness as the insulation, and shall extend 2 inches on each end beyond the protection shield. When insulation inserts are required in accordance with the above, and the insulation thickness is less than 1 inch, wooden or cork dowels or blocks may be installed between the pipe and the shield to prevent the weight of the pipe from crushing the insulation, as an option to installing insulation inserts. The insulation jacket shall be continuous over the wooden dowel, wooden block, or insulation insert.

3.2.1.3.3 Vertical Pipes

Supported with either Type 8 or Type 42 riser clamps with the addition of two Type 40 protection shields in accordance with MSS SP-69 covering the 360-degree arc of the insulation. An insulation insert of cellular glass or calcium silicate shall be installed between each shield and the pipe. The insert shall cover the 360-degree arc of the pipe. Inserts shall be the same thickness as the insulation, and shall extend 2 inches on each end beyond the protection shield. When insulation inserts are required in accordance with the above, and the insulation thickness is less than 1 inch, wooden or cork dowels or blocks may be installed between the pipe and the shield to prevent the hanger from crushing the insulation, as an option instead of installing insulation inserts. The insulation jacket shall be continuous over the wooden dowel, wooden block, or insulation insert. The vertical weight of the pipe shall be supported with hangers located in a horizontal section of the pipe. When the pipe riser is longer than 30 feet, the weight of the pipe shall be additionally supported with hangers in the vertical run of the pipe that are directly clamped to the pipe, penetrating the pipe insulation. These hangers shall be insulated and the insulation jacket sealed as indicated herein for anchors in a similar service.

3.2.1.3.4 Inserts

Covered with a jacket material of the same appearance and quality as the adjoining pipe insulation jacket, overlap the adjoining pipe jacket 1-1/2 inches, and seal as required for the pipe jacket. The jacket material used to cover inserts in flexible elastomeric cellular insulation shall conform to ASTM C1136, Type 1, and is allowed to be of a different material than

the adjoining insulation material.

3.2.1.4 Flexible Elastomeric Cellular Pipe Insulation

Flexible elastomeric cellular pipe insulation shall be tubular form for pipe sizes 6 inches and less. Grade 1, Type II sheet insulation used on pipes larger than 6 inches shall not be stretched around the pipe. On pipes larger than 12 inches, the insulation shall be adhered directly to the pipe on the lower 1/3 of the pipe. Seams shall be staggered when applying multiple layers of insulation. Sweat fittings shall be insulated with miter-cut pieces the same size as on adjacent piping. Screwed fittings shall be insulated with sleeved fitting covers fabricated from miter-cut pieces and shall be overlapped and sealed to the adjacent pipe insulation. Type II requires an additional exterior vapor retarder/barrier covering for high relative humidity and below ambient temperature applications.

3.2.1.5 Pipes in high abuse areas.

In high abuse areas such as janitor closets and traffic areas in equipment rooms, and mechanical rooms, welded PVC , aluminum or flexible laminate cladding (comprised of elastomeric, plastic or metal foil laminate) laminated self-adhesive (minimum 2 mils adhesive, 3 mils embossed) vapor barrier/weatherproofing jacket, - less than 0.0000 permeability; (greater than 3 ply, standard grade, silver, white, black and embossed) aluminum jackets shall be utilized. Pipe insulation to the 6 foot level shall be protected.

3.2.1.6 Pipe Insulation Material and Thickness

TABLE 1

Insulation Material for Piping

Service Material	Specification	Type	Class	VR/VB Req'd
Cold Domestic Water Piping, Makeup Water & Drinking Fountain Drain Piping				
Cellular Glass	ASTM C552	II	2	No
Hot Domestic Water Supply & Recirculating Piping (Max 200 F)				
Mineral Fiber	ASTM C547	I	1	No
Refrigerant Suction Piping (35 degrees F nominal)				
Flexible Elastomeric Cellular	ASTM C534/C534M	I		No
Exposed Lavatory Drains, Exposed Domestic Water Piping & Drains to Areas for Handicapped Personnel				
Flexible Elastomeric Cellular	ASTM C534/C534M	I		No

TABLE 1

Insulation Material for Piping

Service Material	Specification	Type	Class	VR/VB Req'd
Condensate Drain Located Inside Building				
Cellular Glass	ASTM C552	II	2	No

Note: VR/VB = Vapor Retarder/Vapor Barrier

TABLE 2

Piping Insulation Thickness (inch)
Do not use integral wicking material in Chilled water applications exposed to outdoor ambient conditions in climatic zones 1 through 4.

Service Material	Tube And Pipe Size (inch)				
	<1	1-<1.5	1.5-<4	4-<8	> or = >8
Cold Domestic Water Piping, Makeup Water & Drinking Fountain Drain Piping					
Cellular Glass	1.5	1.5	1.5	1.5	1.5
Hot Domestic Water Supply & Recirculating Piping (Max 200 F)					
Mineral Fiber	1	1	1	1.5	1.5
Refrigerant Suction Piping (35 degrees F nominal)					
Flexible Elastomeric Cellular	1	1	1	N/A	N/A
Exposed Lavatory Drains, Exposed Domestic Water Piping & Drains to Areas for Handicapped Personnel					
Flexible Elastomeric Cellular	0.5	0.5	0.5	0.5	0.5
Flexible Elastomeric Cellular	1	1	1	N/A	N/A
Condensate Drain Located Inside Building					
Cellular Glass	1.5	1.5	1.5	1.5	1.5

3.2.2 Aboveground Cold Pipelines

The following cold pipelines for minus 30 to plus 60 degrees F, shall be insulated in accordance with Table 2 except those piping listed in subparagraph Pipe Insulation in PART 3 as to be omitted. This includes but is not limited to the following:

a. Make-up water.

b. Refrigerant suction lines.

c. Refrigerant heat recovery lines.

d. Air conditioner condensate drains.

e. Exposed lavatory drains and domestic water lines serving plumbing fixtures for handicap persons.

f. Domestic cold and chilled drinking water.

3.2.2.1 Insulation Material and Thickness

Insulation thickness for cold pipelines shall be determined using Table 2.

3.2.2.2 Factory or Field applied Jacket

Insulation shall be covered with a factory applied vapor retarder jacket/vapor barrier or field applied seal welded PVC jacket or greater than 3 ply laminated self-adhesive (minimum 2 mils adhesive, 3 mils embossed) vapor barrier/weatherproofing jacket - less than 0.0000 permeability, standard grade, sliver, white, black and embossed for use with Mineral Fiber, Cellular Glass, and Phenolic Foam Insulated Pipe. Insulation inside the building, to be protected with an aluminum jacket or greater than 3ply vapor barrier/weatherproofing self-adhesive (minimum 2 mils adhesive, 3 mils embossed) product, less than 0.0000 permeability, standard grade, Embossed Silver, White & Black, shall have the insulation and vapor retarder jacket installed as specified herein. The aluminum jacket or greater than 3ply vapor barrier/weatherproofing self-adhesive (minimum 2 mils adhesive, 3 mils embossed) product, less than 0.0000 permeability, standard grade, embossed silver, White & Black, shall be installed as specified for piping exposed to weather, except sealing of the laps of the aluminum jacket is not required. In high abuse areas such as janitor closets and traffic areas in equipment rooms, kitchens, and mechanical rooms, aluminum jackets or greater than 3ply vapor barrier/weatherproofing self-adhesive (minimum 2 mils adhesive, 3 mils embossed) product, less than 0.0000 permeability, standard grade, embossed silver, white & black, shall be provided for pipe insulation to the 6 ft level.

3.2.2.3 Installing Insulation for Straight Runs Hot and Cold Pipe

Apply insulation to the pipe with tight butt joints. Seal all butted joints and ends with joint sealant and seal with a vapor retarder coating, greater than 3 ply laminate jacket - less than 0.0000 perm adhesive tape or PVDC adhesive tape.

3.2.2.3.1 Longitudinal Laps of the Jacket Material

Overlap not less than 1-1/2 inches. Provide butt strips 3 inches wide for circumferential joints.

3.2.2.3.2 Laps and Butt Strips

Secure with adhesive and staple on 4 inch centers if not factory self-sealing. If staples are used, seal in accordance with paragraph STAPLES below. Note that staples are not required with cellular glass

systems.

3.2.2.3.3 Factory Self-Sealing Lap Systems

May be used when the ambient temperature is between 40 and 120 degrees F during installation. Install the lap system in accordance with manufacturer's recommendations. Use a stapler only if specifically recommended by the manufacturer. Where gaps occur, replace the section or repair the gap by applying adhesive under the lap and then stapling.

3.2.2.3.4 Staples

coat all staples, including those used to repair factory self-seal lap systems, with a vapor retarder coating or PVDC adhesive tape or greater than 3 ply laminate jacket - less than 0.0000 perm adhesive tape. Coat all seams, except those on factory self-seal systems, with vapor retarder coating or PVDC adhesive tape or greater than 3 ply laminate jacket - less than 0.0000 perm adhesive tape.

3.2.2.3.5 Breaks and Punctures in the Jacket Material

Patch by wrapping a strip of jacket material around the pipe and secure it with adhesive, staple, and coat with vapor retarder coating or PVDC adhesive tape or greater than 3 ply laminate jacket - less than 0.0000 perm adhesive tape. Extend the patch not less than 1-1/2 inches past the break.

3.2.2.3.6 Penetrations Such as Thermometers

Fill the voids in the insulation and seal with vapor retarder coating or PVDC adhesive tape or greater than 3 ply laminate jacket - less than 0.0000 perm adhesive tape.

3.2.2.3.7 Flexible Elastomeric Cellular Pipe Insulation

Install by slitting the tubular sections and applying them onto the piping or tubing. Alternately, whenever possible slide un-slit sections over the open ends of piping or tubing. Secure all seams and butt joints and seal with adhesive. When using self seal products only the butt joints shall be secured with adhesive. Push insulation on the pipe, never pulled. Stretching of insulation may result in open seams and joints. Clean cut all edges. Rough or jagged edges of the insulation are not be permitted. Use proper tools such as sharp knives. Do not stretch Grade 1, Type II sheet insulation around the pipe when used on pipe larger than 6 inches. On pipes larger than 12 inches, adhere sheet insulation directly to the pipe on the lower 1/3 of the pipe.

3.2.2.4 Insulation for Fittings and Accessories

a. Pipe insulation shall be tightly butted to the insulation of the fittings and accessories. The butted joints and ends shall be sealed with joint sealant and sealed with a vapor retarder coating or PVDC adhesive tape or greater than 3 ply laminate jacket - less than 0.0000 perm adhesive tape.

b. Precut or preformed insulation shall be placed around all fittings and accessories. Insulation shall be the same insulation as the pipe insulation, including same density, thickness, and thermal conductivity. Where precut/preformed is unavailable, rigid preformed pipe insulation sections may be segmented into the shape required.

Insulation of the same thickness and conductivity as the adjoining pipe insulation shall be used. If nesting size insulation is used, the insulation shall be overlapped 2 inches or one pipe diameter.

c. Upon completion of insulation installation on flanges, unions, valves, anchors, fittings and accessories, terminations, seams, joints and insulation not protected by factory vapor retarder jackets or PVC fitting covers shall be protected with PVDC or greater than 3 ply laminate jacket - less than 0.0000 perm adhesive tape or two coats of vapor retarder coating with a minimum total thickness of 1/16 inch, applied with glass tape embedded between coats. Tape seams shall overlap 1 inch. The coating shall extend out onto the adjoining pipe insulation 2 inches. Fabricated insulation with a factory vapor retarder jacket shall be protected with either greater than 3 ply laminate jacket - less than 0.0000 perm adhesive tape, standard grade, silver, white, black and embossed or PVDC adhesive tape or two coats of vapor retarder coating with a minimum thickness of 1/16 inch and with a 2 inch wide glass tape embedded between coats. Where fitting insulation butts to pipe insulation, the joints shall be sealed with a vapor retarder coating and a 4 inch wide ASJ tape which matches the jacket of the pipe insulation.

d. Anchors attached directly to the pipe shall be insulated for a sufficient distance to prevent condensation but not less than 6 inches from the insulation surface.

e. Insulation shall be marked showing the location of unions, strainers, and check valves.

3.2.2.5 Optional PVC Fitting Covers

At the option of the Contractor, premolded, one or two piece PVC fitting covers may be used in lieu of the vapor retarder and embedded glass tape. Factory precut or premolded insulation segments shall be used under the fitting covers for elbows. Insulation segments shall be the same insulation as the pipe insulation including same density, thickness, and thermal conductivity. The covers shall be secured by PVC vapor retarder tape, adhesive, seal welding or with tacks made for securing PVC covers. Seams in the cover, and tacks and laps to adjoining pipe insulation jacket, shall be sealed with vapor retarder tape to ensure that the assembly has a continuous vapor seal.

3.2.3 Aboveground Hot Pipelines

3.2.3.1 General Requirements

All hot pipe lines above 60 degrees F, except those piping listed in subparagraph Pipe Insulation in PART 3 as to be omitted, shall be insulated in accordance with Table 2. This includes but is not limited to the following:

a. Domestic hot water supply & re-circulating system.

b. Refrigerant heat recovery lines.

Insulation shall be covered, in accordance with manufacturer's recommendations, with a factory applied Type I jacket or field applied aluminum where required or seal welded PVC.

3.2.3.2 Insulation for Fittings and Accessories

Pipe insulation shall be tightly butted to the insulation of the fittings and accessories. The butted joints and ends shall be sealed with joint sealant. Insulation shall be marked showing the location of unions, strainers, check valves and other components that would otherwise be hidden from view by the insulation.

3.2.3.2.1 Precut or Preformed

Place precut or preformed insulation around all fittings and accessories. Insulation shall be the same insulation as the pipe insulation, including same density, thickness, and thermal conductivity.

3.2.3.2.2 Rigid Preformed

Where precut/preformed is unavailable, rigid preformed pipe insulation sections may be segmented into the shape required. Insulation of the same thickness and conductivity as the adjoining pipe insulation shall be used. If nesting size insulation is used, the insulation shall be overlapped 2 inches or one pipe diameter.

3.2.4 Piping Exposed to Weather

Piping exposed to weather shall be insulated and jacketed as specified for the applicable service inside the building. After this procedure, a laminated self-adhesive (minimum 2 mils adhesive, 3 mils embossed) vapor barrier/weatherproofing jacket - less than 0.0000 permeability (greater than 3 ply, standard grade, silver, white, black and embossed aluminum jacket or PVC jacket shall be applied. PVC jacketing requires no factory-applied jacket beneath it, however an all service jacket shall be applied if factory applied jacketing is not furnished. Flexible elastomeric cellular insulation exposed to weather shall be treated in accordance with paragraph INSTALLATION OF FLEXIBLE ELASTOMERIC CELLULAR INSULATION in PART 3.

3.2.4.1 Aluminum Jacket

The jacket for hot piping may be factory applied. The jacket shall overlap not less than 2 inches at longitudinal and circumferential joints and shall be secured with bands at not more than 12 inch centers. Longitudinal joints shall be overlapped down to shed water and located at 4 or 8 o'clock positions. Joints on piping 60 degrees F and below shall be sealed with metal jacketing/flashing sealant while overlapping to prevent moisture penetration. Where jacketing on piping 60 degrees F and below abuts an un-insulated surface, joints shall be caulked to prevent moisture penetration. Joints on piping above 60 degrees F shall be sealed with a moisture retarder.

3.2.4.2 Insulation for Fittings

Flanges, unions, valves, fittings, and accessories shall be insulated and finished as specified for the applicable service. Two coats of breather emulsion type weatherproof mastic (impermeable to water, permeable to air) recommended by the insulation manufacturer shall be applied with glass tape embedded between coats. Tape overlaps shall be not less than 1 inch and the adjoining aluminum jacket not less than 2 inches. Factory preformed aluminum jackets may be used in lieu of the above. Molded PVC fitting covers shall be provided when PVC jackets are used for straight runs of

pipe. PVC fitting covers shall have adhesive welded joints and shall be weatherproof laminated self-adhesive (minimum 2 mils adhesive, 3 mils embossed) vapor barrier/weatherproofing jacket - less than 0.0000 permeability, (greater than 3 ply, standard grade, silver, white, black and embossed, and UV resistant.

3.2.4.3 PVC Jacket

PVC jacket shall be ultraviolet resistant and adhesive welded weather tight with manufacturer's recommended adhesive. Installation shall include provision for thermal expansion.

3.3 DUCT INSULATION SYSTEMS INSTALLATION

Except for oven hood exhaust duct insulation, corner angles shall be installed on external corners of insulation on ductwork in exposed finished spaces before covering with jacket. Air conditioned spaces shall be defined as those spaces directly supplied with cooled conditioned air (or provided with a cooling device such as a fan-coil unit) and heated conditioned air (or provided with a heating device such as a unit heater, radiator or convector).

3.3.1 Duct Insulation Thickness

Duct insulation thickness shall be in accordance with Table 4.

Table 4 - Minimum Duct Insulation (inches)

Cold Air Ducts	2.0
Relief Ducts	1.5
Fresh Air Intake Ducts	1.5
Warm Air Ducts	2.0
Relief Ducts	1.5
Fresh Air Intake Ducts	1.5

3.3.2 Insulation and Vapor Retarder/Vapor Barrier for Cold Air Duct

Insulation and vapor retarder/vapor barrier shall be provided for the following cold air ducts and associated equipment.

a. Supply ducts.

b. Return air ducts.

c. Relief ducts.

d. Flexible run-outs (field-insulated).

e. Plenums.

f. Exhaust/return duct to the energy recovery unit.

g. Coil headers and return bends.

h. Coil casings.

i. Fresh air intake ducts.

j. Filter boxes.

k. Mixing boxes (field-insulated).

l. Supply fans (field-insulated).

Insulation for rectangular ducts shall be flexible type where concealed, minimum density 3/4 pcf, and rigid type where exposed, minimum density 3 pcf. Insulation for both concealed or exposed round/oval ducts shall be flexible type, minimum density 3/4 pcf or a semi rigid board, minimum density 3 pcf, formed or fabricated to a tight fit, edges beveled and joints tightly butted and staggered. Insulation for all exposed ducts shall be provided with either a white, paint-able, factory-applied Type I jacket or a field applied vapor retarder/vapor barrier jacket coating finish as specified, the total field applied dry film thickness shall be approximately 1/16 inch. Insulation on all concealed duct shall be provided with a factory-applied Type I or II vapor retarder/vapor barrier jacket. Duct insulation shall be continuous through sleeves and prepared openings except firewall penetrations. Duct insulation terminating at fire dampers, shall be continuous over the damper collar and retaining angle of fire dampers, which are exposed to unconditioned air and which may be prone to condensate formation. Duct insulation and vapor retarder/vapor barrier shall cover the collar, neck, and any un-insulated surfaces of diffusers, registers and grills. Vapor retarder/vapor barrier materials shall be applied to form a complete unbroken vapor seal over the insulation. Sheet Metal Duct shall be sealed in accordance with Section 23 00 00 AIR SUPPLY, DISTRIBUTION, VENTILATION, AND EXHAUST SYSTEM.

3.3.2.1 Installation on Concealed Duct

a. For rectangular, oval or round ducts, flexible insulation shall be attached by applying adhesive around the entire perimeter of the duct in 6 inch wide strips on 12 inch centers.

b. For rectangular and oval ducts, 24 inches and larger insulation shall be additionally secured to bottom of ducts by the use of mechanical fasteners. Fasteners shall be spaced on 16 inch centers and not more than 16 inches from duct corners.

c. For rectangular, oval and round ducts, mechanical fasteners shall be provided on sides of duct risers for all duct sizes. Fasteners shall be spaced on 16 inch centers and not more than 16 inches from duct corners.

d. Insulation shall be impaled on the mechanical fasteners (self stick pins) where used and shall be pressed thoroughly into the adhesive. Care shall be taken to ensure vapor retarder/vapor barrier jacket joints overlap 2 inches. The insulation shall not be compressed to a thickness less than that specified. Insulation shall be carried over standing seams and trapeze-type duct hangers.

e. Where mechanical fasteners are used, self-locking washers shall be installed and the pin trimmed and bent over.

f. Jacket overlaps shall be secured with staples and tape as necessary to ensure a secure seal. Staples, tape and seams shall be coated with a brush coat of vapor retarder coating or PVDC adhesive tape or greater than 3 ply laminate (minimum 2 mils adhesive, 3 mils embossed) - less than 0.0000 perm adhesive tape.

g. Breaks in the jacket material shall be covered with patches of the same material as the vapor retarder jacket. The patches shall extend not less than 2 inches beyond the break or penetration in all directions and shall be secured with tape and staples. Staples and tape joints shall be sealed with a brush coat of vapor retarder coating or PVDC adhesive tape or greater than 3 ply laminate (minimum 2 mils adhesive, 3 mils embossed) - less than 0.0000 perm adhesive tape.

h. At jacket penetrations such as hangers, thermometers, and damper operating rods, voids in the insulation shall be filled and the penetration sealed with a brush coat of vapor retarder coating or PVDC adhesive tape greater than 3 ply laminate (minimum 2 mils adhesive, 3 mils embossed) - less than 0.0000 perm adhesive tape.

i. Insulation terminations and pin punctures shall be sealed and flashed with a reinforced vapor retarder coating finish or tape with a brush coat of vapor retarder coating.. The coating shall overlap the adjoining insulation and un-insulated surface 2 inches. Pin puncture coatings shall extend 2 inches from the puncture in all directions.

j. Where insulation standoff brackets occur, insulation shall be extended under the bracket and the jacket terminated at the bracket.

3.3.2.2 Installation on Exposed Duct Work

a. For rectangular ducts, rigid insulation shall be secured to the duct by mechanical fasteners on all four sides of the duct, spaced not more than 12 inches apart and not more than 3 inches from the edges of the insulation joints. A minimum of two rows of fasteners shall be provided for each side of duct 12 inches and larger. One row shall be provided for each side of duct less than 12 inches. Mechanical fasteners shall be as corrosion resistant as G60 coated galvanized steel, and shall indefinitely sustain a 50 lb tensile dead load test perpendicular to the duct wall.

b. Form duct insulation with minimum jacket seams. Fasten each piece of rigid insulation to the duct using mechanical fasteners. When the height of projections is less than the insulation thickness, insulation shall be brought up to standing seams, reinforcing, and other vertical projections and shall not be carried over. Vapor retarder/barrier jacket shall be continuous across seams, reinforcing, and projections. When height of projections is greater than the insulation thickness, insulation and jacket shall be carried over. Apply insulation with joints tightly butted. Neatly bevel insulation around name plates and access plates and doors.

c. Impale insulation on the fasteners; self-locking washers shall be installed and the pin trimmed and bent over.

d. Seal joints in the insulation jacket with a 4 inch wide strip of tape. Seal taped seams with a brush coat of vapor retarder coating.

e. Breaks and ribs or standing seam penetrations in the jacket material shall be covered with a patch of the same material as the jacket. Patches shall extend not less than 2 inches beyond the break or penetration and shall be secured with tape and stapled. Staples and joints shall be sealed with a brush coat of vapor retarder coating.

f. At jacket penetrations such as hangers, thermometers, and damper operating rods, the voids in the insulation shall be filled and the penetrations sealed with a flashing sealant.

g. Insulation terminations and pin punctures shall be sealed and flashed with a reinforced vapor retarder coating finish. The coating shall overlap the adjoining insulation and un-insulated surface 2 inches. Pin puncture coatings shall extend 2 inches from the puncture in all directions.

h. Oval and round ducts, flexible type, shall be insulated with factory Type I jacket insulation with minimum density of 3/4 pcf.

3.3.3 Insulation for Warm Air Duct

Insulation and vapor barrier shall be provided for the following warm air ducts and associated equipment:.

a. Supply ducts.

b. Return air ducts.

c. Relief air ducts

d. Flexible run-outs (field insulated).

e. Plenums.

f. Exhaust/return air ducts from the interior spaces to the energy recovery unit.

g. Coil-headers and return bends.

h. Coil casings.

i. Fresh air intake ducts.

j. Filter boxes.

k. Mixing boxes.

l. Supply fans.

Insulation for rectangular ducts shall be flexible type where concealed, and rigid type where exposed. Insulation on exposed ducts shall be provided with a white, paint-able, factory-applied Type II jacket, or finished with adhesive finish. Flexible type insulation shall be used for round ducts, with a factory-applied Type II jacket. Insulation on concealed duct shall be provided with a factory-applied Type II jacket. Adhesive finish where indicated to be used shall be accomplished by applying two coats of adhesive with a layer of glass cloth embedded between the coats. The total dry film thickness shall be approximately 1/16 inch. Duct insulation shall be continuous through sleeves and prepared openings.

Duct insulation shall terminate at fire dampers and flexible connections.

3.3.3.1 Installation on Concealed Duct

a. For rectangular, oval and round ducts, insulation shall be attached by applying adhesive around the entire perimeter of the duct in 6 inch wide strips on 12 inch centers.

b. For rectangular and oval ducts 24 inches and larger, insulation shall be secured to the bottom of ducts by the use of mechanical fasteners. Fasteners shall be spaced on 18 inch centers and not more than 18 inches from duct corner.

c. For rectangular, oval and round ducts, mechanical fasteners shall be provided on sides of duct risers for all duct sizes. Fasteners shall be spaced on 18 inch centers and not more than 18 inches from duct corners.

d. The insulation shall be impaled on the mechanical fasteners where used. The insulation shall not be compressed to a thickness less than that specified. Insulation shall be carried over standing seams and trapeze-type hangers.

e. Self-locking washers shall be installed where mechanical fasteners are used and the pin trimmed and bent over.

f. Insulation jacket shall overlap not less than 2 inches at joints and the lap shall be secured and stapled on 4 inch centers.

3.3.3.2 Installation on Exposed Duct

a. For rectangular ducts, the rigid insulation shall be secured to the duct by the use of mechanical fasteners on all four sides of the duct, spaced not more than 16 inches apart and not more than 6 inches from the edges of the insulation joints. A minimum of two rows of fasteners shall be provided for each side of duct 12 inches and larger and a minimum of one row for each side of duct less than 12 inches.

b. Duct insulation with factory-applied jacket shall be formed with minimum jacket seams, and each piece of rigid insulation shall be fastened to the duct using mechanical fasteners. When the height of projection is less than the insulation thickness, insulation shall be brought up to standing seams, reinforcing, and other vertical projections and shall not be carried over the projection. Jacket shall be continuous across seams, reinforcing, and projections. Where the height of projections is greater than the insulation thickness, insulation and jacket shall be carried over the projection.

c. Insulation shall be impaled on the fasteners; self-locking washers shall be installed and pin trimmed and bent over.

d. Joints on jacketed insulation shall be sealed with a 4 inch wide strip of tape and brushed with vapor retarder coating.

e. Breaks and penetrations in the jacket material shall be covered with a patch of the same material as the jacket. Patches shall extend not less than 2 inches beyond the break or penetration and shall be secured with adhesive and stapled.

f. Insulation terminations and pin punctures shall be sealed with tape and brushed with vapor retarder coating.

g. Oval and round ducts, flexible type, shall be insulated with factory Type I jacket insulation, minimum density of 3/4 pcf attached by staples spaced not more than 16 inches and not more than 6 inches from the degrees of joints. Joints shall be sealed in accordance with item "d." above.

3.3.4 Ducts Handling Air for Dual Purpose

For air handling ducts for dual purpose below and above 60 degrees F, ducts shall be insulated as specified for cold air duct.

3.3.5 Duct Test Holes

After duct systems have been tested, adjusted, and balanced, breaks in the insulation and jacket shall be repaired in accordance with the applicable section of this specification for the type of duct insulation to be repaired.

-- End of Section --

THIS PAGE HAS BEEN INTENTIONALLY LEFT BLANK

SECTION 23 08 00.00 22

COMMISSIONING OF HVAC SYSTEMS
10/13

PART 1 GENERAL

1.1 REFERENCES

The publications listed below form a part of this specification to the extent referenced. The publications are referred to within the text by the basic designation only.

ASSOCIATED AIR BALANCE COUNCIL (AABC)

ACG Commissioning Guideline	(2005) Commissioning Guideline

NATIONAL ENVIRONMENTAL BALANCING BUREAU (NEBB)

NEBB Commissioning Standard	(2009) Procedural Standards for Whole Building Systems Commissioning of New Construction; 3rd Edition

1.2 SUMMARY

The requirements of this section apply to all sections of Division 23. Refer to Division 1 Section 01 91 13.00 22 GENERAL COMMISSIONING REQUIREMENTS FOR CONSTRUCTION for general commissioning requirements applicable to the entire project.

This Section includes Commissioning process requirements for HVAC&R systems, assemblies, components and equipment to ensure that the work has been completed as specified and that systems are functioning in the manner as described herein, and as specified in the system operating criteria for this project.

a. Commissioning will commence according to the approved construction schedule, after the completion of the HVAC test, balance and adjust (TAB) report, and after the preliminary inspection punchlist items and commissioning deficiencies are completed by the Contractor and his subcontractors.

b. Construction phase commissioning process shall include the following:

   1. Step One: Installation Verification

   2. Step Two: System Startup

   3. Step Three: Functional Performance Testing

The HVAC commissioning process includes the following tasks:

a. Testing and startup of HVAC equipment and systems.

b. HVAC equipment and system verification checks.

c. Assistance in functional performance testing to verify testing and balancing, and equipment and system performance.

d. Provide qualified personnel to assist in commissioning tests, including seasonal testing.

e. Complete and endorse construction phase checklists provided by Commissioning Authority (CxA) to assure equipment and systems are fully operational and ready for functional performance testing.

f. Provide equipment, materials, and labor necessary to correct deficiencies found during commissioning process and to fulfill contract and warranty requirements.

g. Provide operation and maintenance information and record drawings to Commissioning Authority for review verification and organization, prior to distribution.

h. Provide assistance to CxA to develop, edit, and document system operation descriptions.

i. Provide training for systems specified in this Section, coordinated with the CxA.

The commissioning process will also be used to develop test protocol and record the associated test data in an effort to advance the building HVAC systems from a state of substantial completion to a full dynamic operation.

The commissioning process is also intended to assist the Government's operating and maintenance staff in the training and familiarization with new HVAC systems and equipment. The Commissioning Plan and final Commissioning Report should also serve as tools to reduce post-occupancy critical systems operational difficulty or failure. Operational staff training is essential to the commission process and will run concurrently with Steps One through Three referenced above.

The commissioning required by this section is intended to supplement the inspection, testing, and training requirements contained in the technical sections and to consolidate the reports required by those sections. Duplication of the inspection, testing and training required by the technical sections is not required. This section does include additional commissioning requirements.

1.3 DEFINITIONS

Refer to Division 1 Section 01 91 13.00 22 GENERAL COMMISSIONING REQUIREMENTS FOR CONSTRUCTION, Article "Definitions" for definintions applicable to this section.

1.4 COMMISSIONING SUBMITTAL REQUIREMENTS

Commissioning Authority (CxA) shall prepare Commissioning Plan, Prefunctional Checklists, Functional Performance Test (FPT) procedures, narrative descriptions of the design intent for each of the systems identified, and the Commissioning Report, and execute and document results.

a. Contractor shall provide CxA with documentation required for Commissioning Work. At minimum, documentation shall include: detailed start-up procedures, full sequences of operation, Operating and Maintenance data and performance data, control drawings, and details of Government-contracted tests.

b. Contractor shall submit to CxA the manufacturers' installation and checkout materials actually shipped inside equipment and actual field checkout sheet forms used by factory or field technicians.

c. Contractor shall review and approve other relative documentation for impact on FPT's of the systems:

1. Verify manufacturer's installation instructions are followed by completing the prefunctional checklists for all HVAC equipment.

2. Draft Test, Adjust and Balance (TAB) Reports: Review and provide comments to Government.

3. Factory Performance Test Reports: Review and compile all factory performance data to assure that the data is complete prior to executing the FPT's.

4. Completed equipment Start-up certification forms along with the manufacturer's field or factory performance and Start-up test documentation: Subcontractor performing the test will review the documentation prior to commencing with the scheduled FPT's. Government may require that system one-line diagrams and applicable Specification Section(s) be attached to the FPT documentation.

5. Final TAB Reports: Subcontractor performing the test will review the documentation prior to commencing with the scheduled FPT's.

6. Operating and Maintenance (O&M) information per requirements of the Technical Specifications and Division 01 requirements: To validate adequacy and completeness of the FPT, the Contractor shall ensure that the O&M manual content, marked-up record Drawings and Specifications, component submittal drawings, and other pertinent documents are available at the Project Site for review.

1.5 SYSTEMS TO BE COMMISSIONED

The following systems shall be commissioned as part of this project:

a. Air Handling Systems: Fans, motors, variable speed drives, cooling coils, heating coils, filters, dampers, safeties such as smoke detectors and damper end switches, controls, gages, and vibration isolation.

b. Dehumidification Systems, piping systems, pumps, ductwork systems, packaged DX roof top equipment, split-system DX air conditioning equipment and heat pumps, self-contained air conditioning units, fan-coil units, heat exchangers, constant and variable volume air terminals, fire dampers and smoke dampers, indoor air quality, DDC controls, and test, adjust and balance (TAB) work.

c. Energy Recovery Devices: Enthalpy wheels, fans, motors, variable speed drives, cooling coils and control valves, heating coils and control valves, filters, dampers, safeties, controls, gages, and vibration isolation.

d. Exhaust Fans: Fan, motor, variable speed drives, controls and safeties.

e. Direct Digital Control Systems (DDC), Building Automation Systems (BAS), Energy Control and Management Systems (EMCS), Utility Management and Control Systems (UMCS): BACnet or similar Local Area Network (LAN), Operator Work Station hardware/software, building controller hardware/software, terminal unit controller hardware/software, all sequences of operation, system accuracy and response time, point-to-point verification.

1.6 COMMISSIONING RESPONSIBILITIES

1.6.1 HVAC Equipment/System Installer Commissioning Responsibilities

a. Attend commissioning meetings.

b. Ensure temperature controls installer performs assigned commissioning responsibilities as specified herein.

c. Ensure testing, adjusting, and balancing agency performs assigned commissioning responsibilities as specified herein.

d. Provide instructions and demonstrations for Government personnel.

e. Ensure subcontractors perform assigned commissioning responsibilities.

f. Ensure participation of equipment manufacturers in appropriate startup, testing, and training activities when required by individual equipment specifications and/or the commissioning plan.

g. Develop startup and initial checkout plan using manufacturer's startup procedures and prefunctional (construction) checklists for equipment and systems to be commissioned.

h. During verification check and startup process, execute HVAC related portions of checklists for equipment and systems to be commissioned.

i. Perform and document completed installation checklists, startup checklists and reports. and system operational checkout procedures, providing copy to CxA.

j. Where specified in the technical sections, provide manufacturer's representatives to execute starting of equipment. Ensure representatives are available and present during agreed upon schedules and are in attendance for duration to complete tests, adjustments and problem-solving.

k. Coordinate with equipment manufacturers to determine specific requirements to maintain validity of warranties.

l. Provide personnel to assist CxA during equipment or system verification checks and functional performance tests.

m. Prior to functional performance tests, review test procedures to ensure feasibility, safety and equipment protection and provide necessary written alarm limits to be used during tests.

n. Prior to startup, inspect, check, and verify correct and complete installation of equipment and system components for verification checks included in commissioning plan. When deficient or incomplete work is

discovered, ensure corrective action is taken and re-check until equipment or system is ready for startup.

o. Provide factory supervised startup services for equipment and systems where specified. Coordinate work with manufacturer and CxA.

p. Perform verification checks and startup on equipment and systems as specified.

q. Assist CxA in performing functional performance tests on equipment and systems as specified.

r. Perform operation and maintenance training sessions scheduled by Contractor in accordance with the commissioning plan.

s. Conduct HVAC system orientation and inspection.

1.6.2 HVAC Temperature Controls Installer Commissioning Responsibilities:

a. Attend commissioning meetings.

b. Review design for ability of systems to be controlled including the following:

1. Confirm proper hardware requirements exists to perform functional performance testing.

2. Confirm proper safeties and interlocks are included in design.

3. Confirm proper sizing of system control valves and actuators and control valve operation will result capacity control identified in Contract Documents.

4. Confirm proper sizing of system control dampers and actuators and damper operation will result in proper damper positioning.

5. Confirm sensors selected are within device ranges.

6. Review sequences of operation and obtain clarification from Architect/Engineer.

7. Indicate delineation of control between packaged controls and building automation system (BAS), listing BAS monitor points and BAS adjustable control points.

8. Provide written sequences of operation for packaged controlled equipment. Equipment manufacturers' stock sequences may be included, when accompanied by additional narrative to reflect Project conditions.

c. Inspect, check, and confirm proper operation and performance of control hardware and software provided in other HVAC sections.

d. Submit proposed procedures for performing automatic temperature control system point-to-point checks to CxA and Architect/Engineer.

e. Inspect check and confirm correct installation and operation of automatic temperature control system input and output device operation through point-to-point checks.

f. Perform training sessions to instruct Government's operations and maintenance personnel in hardware operation, software operation, programming, and application in accordance with commissioning plan.

g. Demonstrate system performance and operation to CxA during functional performance tests including each mode of operation.

h. Provide control system technician to assist during CxA verification check and functional performance testing.

i. Provide control system technician to assist testing, adjusting, and balancing agency during performance of testing, adjusting, and balancing work.

j. Assist in performing operation and maintenance training sessions scheduled by the Contractor.

1.6.3 Testing, Adjusting, and Balancing (TAB) Agency Commissioning Responsibilities:

a. Attend commissioning meetings.

b. Participate in verification of testing, adjusting, and balancing report for verification or diagnostic purposes. Repeat sample (percent) of measurements contained in testing, adjusting, and balancing report as indicated in commissioning plan.

c. Assist in performing operation and maintenance training sessions scheduled by the Contractor.

1.7 SEQUENCING AND SCHEDULING

Begin the work described in this Section only after all work required in related Sections has been successfully completed, and all test and inspection reports and operation and maintenance manuals required in these Sections have been submitted and approved. Pre-Functional (Construction) Checklists shall be performed for the installation of mechanical equipment, at appropriate times during the construction phase of the Contract.

PART 2 PRODUCTS

2.1 GENERAL

All materials shall meet or exceed all applicable referenced standards, federal, state and local requirements, and conform to codes and ordinances of authorities having jurisdiction.

2.2 TEST EQUIPMENT

a. Provide all specialized tools, test equipment and instruments required to execute Start-up, checkout, and testing of equipment.

b. All specialized tools, test equipment, and instruments required to execute Start-up, checkout, and testing of equipment shall be of sufficient quality and accuracy to test and/or measure system performance within specified tolerances. A testing laboratory must have calibrated test equipment within the previous twelve (12) months. Calibration shall be NIST traceable, and shall be in accordance with

the requirements of the NEBB Commissioning Standard or the ACG Commissioning Guideline. Contractor must calibrate test equipment and instruments according to manufacturer's recommended intervals and whenever the test equipment is dropped or damaged. Calibration tags must be affixed to the test equipment or certificates readily available.

PART 3 EXECUTION

3.1 GENERAL

The Contractor and his Subcontractors shall be responsible for performing procedures presented in the specifications, and as indicated on the contract drawings and as detailed in the Functional Performance Tests (FPT) procedures. Members of the designated Commissioning Team shall witness various portions of the commissioning process. Responsibilities for these activities are listed in the following paragraphs. Commissioning Team members shall sign-off on appropriate sections after verifying installation, operation, or documentation. Final sign-off shall be by the Government and the Commissioning Authority (CxA).

Any test ports, gauges, test equipment, etc., needed to accomplish the functional performance tests shall be provided by the Contractor and his Subcontractors.

The Contractor shall provide to the Commissioning Team documentation of calibration of controls. Documentation shall include dates, setpoints, calibration coefficients, control loop verification, and other data required to verify system check-out. Documentation shall be dated and initialed by field engineer or technician performing the work.

3.2 COMMISSIONING PLAN

The commissioning plan will be developed by the third party CxA and submitted to the Government for approval. The approved commissioning plan outlines the organization, scheduling, team members, and documentation pertaining to the overall commissioning process.

3.3 CONSTRUCTION CHECKLIST

a. A checklist shall be developed by the CxA for each component of commissioned equipment and systems to ensure that the specified equipment has been provided, is properly installed, and has been initially started and checked out adequately in preparation for full operation and functional testing (e.g., belt tension, fluids topped, labels affixed, gages in place, sensors calibrated, voltage balanced, rotation correct, etc.).

b. The CxA for this project shall develop 'Prefunctional (Construction) Checklists' for this project, which shall be reviewed and approved by the Government; and then provided to, and completed by the Contractor and his sub-contractors (HVAC, Controls, TAB, etc.) to ensure that all equipment and systems are installed properly; have been started up preliminarily, and are ready for commissioning and performance verification testing.

3.4 FUNCTIONAL PERFORMANCE TEST (FPT) PROCEDURES

The FPT procedures at a minimum shall consist of the following sections:

a. Narrative Description: Provide a narrative description of the design intent of each of the HVAC systems to be tested, their intended modes and sequences of operation.

b. Testing Prerequisites: Provide verification and documentation that primary mechanical, electrical, and controls systems that support or interact with the system that the FPT has been prepared for are completed, tested and operational.

c. Installation Verification: Provide verification that the system installation is completed and is ready for commissioning.

d. Commencement of Functional Performance Testing: Record the date and time of the start of system commissioning.

e. System Condition Prior to Starting Performance Testing: Record the current set points and parameters of the system at the start of commissioning.

f. Functional Performance Test: This section shall provide the following:

    1. Sequential steps required to set parameters and conditions required to test components and functions throughout intended ranges of operation.

    2. Full range of checks and tests carried out to determine if electric and pneumatic connections, components, subsystems, systems and interfaces between systems function in accordance with the contract documents and design intents.

    3. All modes and sequences of control operations, interlocks and conditional control responses and specified responses to abnormal emergency conditions.

g. End of Functional Performance Test: Record the date and time of the completion of system commissioning.

h. Field Notes: Provide a copy of the notes and remarks made and documented during system commissioning. Include these items in the final commissioning report.

i. List systems modifications, not required by the Contract Documents, but provided by the Subcontractor. List other questions regarding such system modifications.

j. List problems discovered during Commissioning that were corrected.

k. List problems discovered during Commissioning that were not corrected.

l. List recommended party that should take action on these 'uncorrected' problems.

The CxA for this project shall develop 'Functional Performance Test' (FPT) procedures for this project, which shall be reviewed and approved by the Government; and then provided to, and completed by the Contractor and his sub-contractors (HVAC, Controls, TAB, etc.), under the supervision of the CxA, to ensure that all equipment and systems are installed properly; have been started up preliminarily, and are reading for commissioning and performance verification testing.

3.5 OPERATIONAL AND MAINTENANCE STAFF TRAINING

System narrative descriptions will be prepared by the CxA and supported by flow diagrams, one line diagrams, and appropriate specification sections for major systems to be commissioned. The CxA will coordinate "system description" meetings with members of facility management and maintenance department groups to review system description documentation. The meetings will provide an overview of major system features, components, and arrangements.

The Contractor, his sub-contractors and associated manufacturer's representatives shall provide the required training to the Government's operational staff after the system description meetings have occurred. These Contractor training sessions for Government personnel shall provide a more detailed analogy of systems operation and maintenance.

3.6 DOCUMENTATION

The Contractor and his installing subcontractors shall be responsible for collection of pertinent data during system installation, inspection and checkout; during system start-up; and during functional performance testing. The Contractor and his subcontractors shall submit to the CxA documentation of all construction inspections, startup procedures and results, as well as any tests performed prior to and after system start-up. Documentation shall also include the equipment manufacturer's start-up procedures as reviewed and approved by Commissioning Team, including startup reports for equipment and systems conducted by a factory-certified technician or engineer, as specified in the Division 23 Sections for this project.

Provide a title sheet for each section and list the following:

a. Section Title and Specification Section Name and Number requiring this submittal.

b. Project name, project number, and address.

c. Contractor and subcontractor names, addresses, and phone numbers.

d. Name, title, signature, and date of person making the submittal.

e. Table of Contents for each Section.

f. Name of Command, a blank line for signature, and the name and title of person accepting the submittal, and the date accepted by signature.

g. Name, address, and phone number of CxA. Include a blank line for signature; and date of person accepting the submittal.

Provide a Table of Contents for multiple submittals. List each submittal and page number. Number each page, centered on the bottom in sequential numerical order.

3.6.1 STEP ONE - INSTALLATION VERIFICATION

General Commissioning Responsibilities:

a. Before system start-up begins, the Commissioning Team shall conduct a

final installation verification audit. The Contractor and his subcontractors shall be responsible for completion of work including change orders and punch list items to the Government's satisfaction. The audit shall include, but not be limited to, checking of:

1. Piping specialties including balance, control, and isolation valves.

2. Ductwork specialty items including turning devices, balance, fire, smoke, control dampers, and access doors.

3. Control sensor types and location.

4. Identification of piping, valves, equipment, controls, etc.

5. Major equipment, pumps, valves, starters, gauges, thermometers, etc.

6. Documentation of prestart-up tests performed, including manufacturer's factory tests.

b. If work is found to be incomplete, incorrect, or non-functional, the Contractor and his subcontractors shall correct the deficiencies before system start-up work proceeds.

3.6.2 STEP TWO - SYSTEM START-UP

General Commissioning Responsibilities: A start-up plan shall be developed and submitted to the Government by the Contractor and his installing subcontractors, for approval. Start-up plan shall include the following:

a. Cleaning of interior of ductwork and air handling units.

b. Check and replace filters, strainers, and screens, as required.

c. Review control valve/damper min-max, and operating positions.

d. Electrical startup procedures and tests for equipment.

e. Completion of required pressure tests for ductwork.

f. Verification of completion of equipment operating controls, including safeties and interlocks.

g. Verify that copies of manufacturer's factory tests are available. Verify that manufacturer's startup tests and reports are complete and that all recommendations by the startup engineer have been addressed and completed.

The start-up plan will be reviewed and approved by the Government. After approval is complete, a prestart-up inspection shall be performed by the CxA, and by designated members of the Commissioning Team. The Contractor and his installing subcontractors shall commence with system start-up after approval has been given to start-up plan and the prestart-up inspection is completed.

a. Designated members of the Commissioning Team shall witness system start-ups and list system and equipment deficiencies noted during start-up. The Contractor and his subcontractors shall take corrective

action on system deficiencies noted and shall demonstrate satisfactory and suitable system operation to the CxA and to the Commissioning Team.

b. Designated systems requiring test and balance work shall have this activity commence after systems have successfully completed start-up. System and equipment deficiencies observed during this activity shall be noted and corrected.

3.6.3 STEP THREE - FUNCTIONAL PERFORMANCE TESTING

General Commissioning Responsibilities:

a. Functional Performance Testing begins after operational testing, adjusting, and balancing of the systems have been completed by the Contractor and his subcontractors. Ideally, the Commissioning training for Government operators and maintenance personnel, including the description of the systems, as well as the hands-on training sessions will also have been completed.

b. The objective of the Functional Performance Testing is to advance the building systems from a state of substantial completion to full dynamic operation in accordance with the specified design requirements and design intent.

c. To attain this objective the CxA will develop individual systems testing protocols which, when implemented by the Contractor/subcontractors will allow the Commissioning Team to observe, evaluate, identify deficiencies, recommend modifications, tune, and document the systems and systems equipment performance over a range of load and functional levels.

d. Functional Performance tests for the systems to be commissioned will be defined in the Commissioning Plan. These tests are intended to be conclusive but may require minor modifications as system operation dictates.

-- End of Section --

THIS PAGE HAS BEEN INTENTIONALLY LEFT BLANK

****
This specification section applies to MCB Camp Lejeune and MCAS New River projects only.
****

SECTION 23 09 23.13 22

BACnet DIRECT DIGITAL CONTROL SYSTEMS FOR HVAC
05/13

PART 1 GENERAL

1.1 REFERENCES

The publications listed below form a part of this specification to the extent referenced. The publications are referred to in the text by the basic designation only.

AIR MOVEMENT AND CONTROL ASSOCIATION INTERNATIONAL (AMCA)

AMCA 500-D	(2012) Laboratory Methods of Testing Dampers for Rating

AMERICAN SOCIETY OF HEATING, REFRIGERATING AND AIR-CONDITIONING ENGINEERS (ASHRAE)

ASHRAE 135	(2010; INT 1-3 2011; Addenda AD & AE 2011; Errata 2012; Addenda AK, AO and I 2012; Errata 2012; INT 4-8 2012) BACnet—A Data Communication Protocol for Building Automation and Control Networks

ASME INTERNATIONAL (ASME)

ASME B16.5	(2013) Pipe Flanges and Flanged Fittings: NPS 1/2 Through NPS 24 Metric/Inch Standard
ASME B31.1	(2012; INT 2-6, 8-10, 13, 15, 17-25, 27-31 and 42-46) Power Piping

ASTM INTERNATIONAL (ASTM)

ASTM A126	(2004; R 2009) Standard Specification for Gray Iron Castings for Valves, Flanges, and Pipe Fittings
ASTM B117	(2011) Standard Practice for Operating Salt Spray (Fog) Apparatus

INSTITUTE OF ELECTRICAL AND ELECTRONICS ENGINEERS (IEEE)

IEEE C62.41.1	(2002; R 2008) Guide on the Surges Environment in Low-Voltage (1000 V and Less) AC Power Circuits
IEEE C62.41.2	(2002) Recommended Practice on Characterization of Surges in Low-Voltage (1000 V and Less) AC Power Circuits

IEEE C62.45	(2002; R 2008) Recommended Practice on Surge Testing for Equipment Connected to Low-Voltage (1000v and less)AC Power Circuits

INTERNATIONAL ORGANIZATION FOR STANDARDIZATION (ISO)

ISO 8802-3	(2000) Information Technology - Telecommunications and Information Exchange Between Systems - Local and Metropolitan Area Networks - Specific Requirements - Part 3: Carrier Sense Multiple Access with Collision Detection (CSMA/CD)Access Method and Physical Layer Specifications

NATIONAL FIRE PROTECTION ASSOCIATION (NFPA)

NFPA 70	(2014; AMD 1 2013; Errata 1 2013; AMD 2 2013; Errata 2 2013; AMD 3 2014; Errata 3-4 2014; AMD 4-6 2014) National Electrical Code
NFPA 72	(2013) National Fire Alarm and Signaling Code
NFPA 90A	(2015) Standard for the Installation of Air Conditioning and Ventilating Systems

SHEET METAL AND AIR CONDITIONING CONTRACTORS' NATIONAL ASSOCIATION (SMACNA)

SMACNA 1966	(2005) HVAC Duct Construction Standards Metal and Flexible, 3rd Edition

UNDERWRITERS LABORATORIES (UL)

UL 1449	(2014) Surge Protective Devices
UL 506	(2008; Reprint Oct 2013) Specialty Transformers
UL 508A	(2001; Reprint Feb 2010) Industrial Control Panels
UL 916	(2007; Reprint Aug 2014) Standard for Energy Management Equipment

1.2 DEFINITIONS

1.2.1 ANSI/ASHRAE Standard 135

ANSI/ASHRAE Standard 135: BACnet - A Data Communication Protocol for Building Automation and Control Networks, referred to as "BACnet". ASHRAE developed BACnet to provide a method for diverse building automation devices to communicate and share data over a network.

1.2.2 BACnet

Building Automation and Control Network; the common name for the communication standard ASHRAE 135. The standard defines methods and protocol for cooperating building automation devices to communicate over a variety of LAN technologies.

1.2.3 BACnet/IP

An extension of BACnet, Annex J, defines this mechanism using a reserved UDP socket to transmit BACnet messages over IP networks. A BACnet/IP network is a collection of one or more IP subnetworks that share the same BACnet network number. See also "BACnet Broadcast Management Device".

1.2.4 BACnet Internetwork

Two or more BACnet networks, possibly using different LAN technologies, connected with routers. In a BACnet internetwork, there exists only one message path between devices.

1.2.5 BACnet Network

One or more BACnet segments that have the same network address and are interconnected by bridges at the physical and data link layers.

1.2.6 BACnet Segment

One or more physical segments of BACnet devices on a BACnet network, connected at the physical layer by repeaters.

1.2.7 BBMD

BACnet Broadcast Management Device (BBMD). A communications device, typically combined with a BACnet router. A BBMD forwards BACnet broadcast messages to BACnet/IP devices and other BBMDs connected to the same BACnet/IP network. Every IP subnetwork that is part of a BACnet/IP network must have only one BBMD. See also "BACnet/IP".

1.2.8 BAS

Building Automation Systems, including DDC (Direct Digital Controls) used for facility automation and energy management.

1.2.9 BIBBs

BACnet Interoperability Building Blocks. A collection of BACnet services used to describe supported tasks. BIBBs are often described in terms of "A" (client) and "B" (server) devices. The “A” device uses data provided by the "B" device, or requests an action from the “B” device.

1.2.10 BI

BACnet International, formerly two organizations: the BACnet Manufacturers Association (BMA) and the BACnet Interest Group - North America (BIG-NA).

1.2.11 BI/BTL

BACnet International/BACnet Testing Laboratories (Formerly BMA/BTL). The organization responsible for testing products for compliance with the

BACnet standard, operated under the direction of BACnet International.

1.2.12 Bridge

Network hardware that connects two or more network (or BACnet internetwork) segments at the physical and data link layers. A bridge may also filter messages.

1.2.13 Broadcast

A message sent to all devices on a network segment.

1.2.14 DADMS

DON Application and Database Management System, (DADMS) is a listing of digital applications approved for purchase and use.

1.2.15 Device

Any control system component, usually a digital controller, that contains a BACnet Device Object and uses BACnet to communicate with other devices. See also "Digital Controller".

1.2.16 Device Object

Every BACnet device requires one Device Object, whose properties represent the network visible properties of that device. Every Device Object requires a unique Object Identifier number on the BACnet internetwork. This number is often referred to as the device instance.

1.2.17 Device Profile

A collection of BIBBs determining minimum BACnet capabilities of a device, defined in ASHRAE 135, Annex L. Standard device profiles include BACnet Operator Workstations (B-OWS), BACnet Building Controllers (B-BC), BACnet Advanced Application Controllers (B-AAC), BACnet Application Specific Controllers (B-ASC), BACnet Smart Actuator (B-SA), and BACnet Smart Sensor (B-SS). Each device used in new construction is required to have a PICS statement listing BIBBs supported and must be tested and listed by BACnet Testing Laboratory (BTL).

1.2.18 Digital Controller

An electronic controller, usually with internal programming logic and digital and analog input/output capability, which performs control functions. In most cases, synonymous with a BACnet device described in this specification. See also "Device". There are different levels of controllers, with varying levels or complexity and flexibility.

1.2.18.1 Terminal Device Controllers

Terminal device controllers typically are controllers with less control features, may have integrated actuators, and may be mounted directly on equipment (with enclosures).

1.2.18.2 Field Controllers

Field controllers typically have a greater capability for input/output and customization, do not have integral actuators, are mounted in an enclosure

not on the equipment and are used for equipment such as VAV air handlers.

1.2.18.3 Plant Controllers

Plant Controllers are typically used to control various equipment in mechanical rooms such as pumps, heat exchangers, and chillers.

1.2.18.4 Supervisory Controllers

Supervisory Controller is used to coordinate all equipment in a building, input scheduling, and is often used as a connection point for transferring configuration files to the other controllers.

1.2.18.5 Supervisory Building Controller (SBC)

Supervisory Building Controller (SBC) is used to connect the building's DDC system (MS/TP) to Camp Lejeune's EMCS (TC/IP). Depending on approvals and capabilities, the SBC and supervisory controller may be combined into the same piece of hardware.

1.2.19 Direct Digital Control (DDC)

Digital controllers performing control logic. Usually the controller directly senses physical values, makes control decisions with internal programs, and outputs control signals to directly operate switches, valves, dampers, and motor controllers.

1.2.20 DDC System

A distribution network of digital controllers, communication architecture, and user interfaces. A DDC system may include programming, sensors, actuators, switches, relays, factory controls, operator workstations, and various other devices, components, and attributes.

1.2.21 DITSCAP

Department of Defense Information Technology Security Certification and Accreditation Process (DITSCAP). DISCAP and DIACAP are processes that approve IP base equipment that is connected and communicates on the base Ethernet network. All devices using TCP/IP or Ethernet connectivity require prior approval to be listed in the DITSCAP and SSA document.

1.2.22 EMCS

Energy Management & Control System. The EMCS at Camp Lejeune is an enterprise system that actively receives energy and building condition information from multiple sources and provides load shedding, electric metering, alarming, trending, scheduling, set point adjustment and device status of all supervisory building controllers for maintenance personnel. The EMCS receives real time electrical utility pricing data and automatically manages to Camp Lejeune's energy target. The existing Camp Lejeune EMCS is manufactured by Johnson Controls and incorporates the Metasys extended architecture system that communicates over the MRAN.

1.2.23 EMCS Owner

The regional or local user responsible for managing all aspects of the BAS operation, including: network connections, workstation management, submittal review, technical support, control parameters, and daily operation. The BAS

Owner for this project is Utility Monitoring & Control (UMAC) Director

1.2.24 Ethernet

A family of local-area-network technologies providing high-speed networking features over various media. Base Telephone manages all Ethernet connections to the IP networks.

1.2.25 Firmware

Software programmed into read only memory (ROM), flash memory, electrically erasable programmable read only memory (EEPROM), or erasable programmable read only memory (EPROM) chips.

1.2.26 Gateway

Communication hardware connecting two or more different protocols, similar to human language translators. The Gateway translates one protocol into equivalent concepts for the other protocol. In BACnet applications, a gateway has BACnet on one side and non-BACnet (usually proprietary) protocols on the other side.

1.2.27 Half Router

A device that participates as one partner in a BACnet point-to-point (PTP) connection. Two half-routers in an active PTP connection combine to form a single router.

1.2.28 Hub

A common connection point for devices on a network.

1.2.29 Internet Protocol (IP, TCP/IP, UDP/IP)

A communication method, the most common use is the World Wide Web. At the lowest level, it is based on Internet Protocol (IP), a method for conveying and routing packets of information over various LAN media. Two common protocols using IP are User Datagram Protocol (UDP) and Transmission Control Protocol (TCP). UDP conveys information to well-known "sockets" without confirmation of receipt. TCP establishes "sessions", which have end-to-end confirmation and guaranteed sequence of delivery.

1.2.30 Input/Output (I/O)

Physical inputs and outputs to and from a device, although the term sometimes describes software, or "virtual" I/O. See also "Points".

1.2.31 I/O Expansion Unit

An I/O expansion unit provides additional point capacity to a digital controller.

1.2.32 IP subnet

Internet protocol (IP) identifies individual devices with a 32-bit number divided into four groups from 0 to 255. Devices are often grouped and share some portion of this number. For example, one device has IP address 209.185.47.68 and another device has IP address 209.185.47.82. These two devices share Class C subnet 209.185.47.00

1.2.33 Local-Area Network (LAN)

A communication network that spans a limited geographic area and uses the same basic communication technology throughout.

1.2.34 MAC Address

Media Access Control address. The physical node address that identifies a device on a Local Area Network.

1.2.35 Master-Slave/Token-Passing (MS/TP)

ISO 8802-3. The standard LAN for BACnet. MSTP uses twisted-pair wiring for relatively low speed and low cost communication (up to 4,000 ft at 76.8K bps).

1.2.36 Native BACnet Device

A device that uses BACnet as its primary, if not only, method of communication with other BACnet devices without intermediary gateways. A system that uses native BACnet devices at all levels is a native BACnet system.

1.2.37 Network

Communication technology for building network data communications. BACnet approved network types are Point to Point (PTP) Ethernet, and MS/TP. BACnet over Internet Protocol is not an approved method for building level controls.

1.2.38 Network Number

A site-specific number assigned to each network segment to identify for routing. This network number must be unique throughout the BACnet internetwork.

1.2.39 Object

The concept of organizing BACnet information into standard components with various associated properties. Examples include analog input objects and binary output objects.

1.2.40 Object Identifier

An object property used to identify the object, including object type and instance. Object Identifiers must be unique within a device.

1.2.41 Object Properties

Attributes of an object. Examples include present value and high limit properties of an analog input object. Properties are defined in ASHRAE 135; some are optional and some are required. Objects are controlled by reading from and writing to object properties.

1.2.42 Peer-to-Peer

Peer-to-peer refers to devices where any device can initiate and respond to communication with other devices.

1.2.43 Performance Verification Test (PVT)

The procedure for determining if the installed BAS meets design criteria prior to final acceptance. The PVT is performed after installation, testing, and balancing of mechanical systems. Typically the PVT is performed by the Contractor in the presence of the Government.

1.2.44 PID

Proportional, integral, and derivative control; three parameters used to control modulating equipment to maintain a setpoint. Derivative control is often not required for HVAC systems (leaving "PI" control).

1.2.45 PICS

Protocol Implementation Conformance Statement (PICS), describing the BACnet capabilities of a device. See BACnet, Annex A for the standard format and content of a PICS statement.

1.2.46 Points

Physical and virtual inputs and outputs. See also "Input/Output".

1.2.47 PTP

Point-to-Point protocol connects individual BACnet devices or networks using serial connections.

1.2.48 Repeater

A network component that connects two or more physical segments at the physical layer.

1.2.49 Router

A BACnet router is a component that joins together two or more networks using different LAN technologies. Examples include joining a BACnet Ethernet LAN to a BACnet MS/TP LAN.

1.2.50 Stand-Alone Control

Refers to devices performing equipment-specific and small system control without communication to other devices or computers for physical I/O, excluding outside air and other common shared conditions. Devices are located near controlled equipment, with physical input and output points limited to 64 or less per device, except for complex individual equipment or systems. Failure of any single device will not cause other network devices to fail. BACnet "Smart" actuators (B-SA profile) and sensors (B-SS profile) communicating on a network with a parent device are exempt from stand-alone requirements.

1.2.51 SSAA

System Security Authorization Agreement. The SSAA is a local document authorizing the use of the IP networks on Camp Lejeune.

1.2.52 Supervisory Controller

Supervisory Controller is the upper level controller on the building's MS/TP bus. It provides building wide points, scheduling, and interface with programming tools.

1.2.53 Supervisory Building Controller (SBC)

The Supervisory Building Controller is the point of connection between the Camp Lejeune EMCS network (IP) and the building level control network (MS/TP). The hardware at this location, that provides the connection is referred to as the SBC. Since the EMCS network uses the Marine Air-Ground Task Force Regional Area Network (MRAM) Ethernet network using TCP/IP, any equipment connecting to the Camp Lejeune EMCS must be listed in the approved DITSCAP or DIACAP equipment list and must be Marine Corps DADMS listed and approved.

1.3 SUBCONTRACTOR SPECIAL REQUIREMENTS

Perform all work in this section in accordance with the paragraph entitled "Subcontractor Special Requirements" in Section 01 30 00 ADMINISTRATIVE REQUIREMENTS. The paragraph specifies that all contract requirements of this section shall be accomplished directly by a first tier subcontractor. No work required shall be accomplished by a second tier subcontractor.

a. The controls sub-contractor for this project shall be regularly engaged in the design and installation of BACnet DDC systems (for building HVAC systems) similar to the size and scope of this project, shall have been a representative of the proposed control system manufacturer for a minimum of two years, have a staffed office within a 50-mile radius of the project location, and shall have performed design and installation of DDC systems for a minimum of 5 years.

b. The controls sub-contractor shall ensure that their installing electricians have a copy of, read, and understand the mechanical sheets of the contract's design construction drawings, in addition to the control drawings prepared by the sub-contractor. Provide the DDC programming and graphics using Standard English units of measure, not metric.

1.4 BACnet DIRECT DIGITAL CONTROL SYSTEMS FOR HVAC DESCRIPTION

a. provide new BACnet DDC systems including associated equipment and accessories.

b. Provide a networked DDC system for stand alone control in compliance with the latest revision of the ASHRAE 135 BACnet standard. Include all programming, objects, and service required to meet the sequence of control. Provide BACnet communication between the DDC system and the native BACnet devices furnished with HVAC equipment, and plant equipment including boilers, chillers, and variable frequency drives. Devices provided shall be BACnet Testing Laboratories (BTL) product listing certified. Interface the new DDC system with Camp Lejeune's existing EMCS. Provide a Supervisory Building Controller (SBC) that shall communicate with the field DDC controllers via the MS/TP bus using BACnet, and with the EMCS via the Marine Air-Ground Task Force Regional Area Network (MRAM) Ethernet network using TCP/IP. Provide interface with the existing EMCS including graphic creation,

scheduling, alarming, load management scheduling and trending.

c. Authority to Operate/Authority to Connect: Prior approval to communicate on the base MRAN is a requirement on this project. Supervisory Building Controllers (SBC) and any other device communicating on the MRAN without being DADMS listed and approved and approval from the Designated Approving Authority based on DITSCAP or DIACAP efforts will not be permitted.

d. Only technicians authorized by the Camp Lejeune utilities department and factory trained on Metasys extended architecture are approved to add, manage or revise data in the EMCS. Authorization shall require a unique username and password managed by the Utilities Department. All equipment listed as being part of the DDC system shall have a defined energy load value and be entered into the base load rolling program. Graphics, naming, trending and overall user views shall be added to the EMCS. All points added shall be consistent with previously installed buildings.

1.4.1 Design Requirements

1.4.1.1 Control System Drawings Title Sheet

Provide a title sheet for the control system drawing set. Include the project title, project location, contract number, the controls contractor preparing the drawings, an index of the control drawings in the set, and a legend of the symbols and abbreviations used throughout the control system drawings.

1.4.1.2 List of I/O Points

Also known as a Point Schedule, provide for each input and output point physically connected to a digital controller: point name, point description, point type (Analog Output (AO), Analog Input (AI), Binary Output (BO), Binary Input (BI)), point sensor range, point actuator range, point address, BACnet object, associated BIBBS (where applicable), and point connection terminal number. Typical schedules for multiple identical equipment are allowed unless otherwise requested in design or contract criteria. All points shall adhere to the Camp Lejeune standard naming conventions.

1.4.1.3 Control System Components List

Provide a complete list of control system components installed on this project. Include for each controller and device: control system schematic name, control system schematic designation, device description, manufacturer, and manufacturer part number. For sensors, include point name, sensor range, and operating limits. For valves, include body style, Cv, design flow rate, pressure drop, valve characteristic (linear or equal percentage), and pipe connection size. For actuators, include point name, spring or non-spring return, modulating or two-position action, normal (power fail) position, nominal control signal operating range (0-10 volts DC or 4-20 milliamps), and operating limits.

1.4.1.4 Control System Schematics

Provide control system schematics. Typical schematics for multiple identical equipment are allowed unless otherwise requested in design or contract criteria. Include the following:

a. Location of each input and output device

b. Flow diagram for each piece of HVAC equipment

c. Name or symbol for each control system component, such as V-1 for a valve

d. Setpoints, with differential or proportional band values

e. Written sequence of operation for the HVAC equipment

f. Valve and Damper Schedules, with normal (power fail) position

1.4.1.5 HVAC Equipment Electrical Ladder Diagrams

Provide HVAC equipment electrical ladder diagrams. Indicate required electrical interlocks.

1.4.1.6 Component Wiring Diagrams

Provide a wiring diagram for each type of input device and output device. Indicate how each device is wired and powered; showing typical connections at the digital controller and power supply. Show for all field connected devices such as control relays, motor starters, actuators, sensors, and transmitters.

1.4.1.7 Terminal Strip Diagrams

Provide a diagram of each terminal strip. Indicate the terminal strip location, termination numbers, and associated point names.

1.4.1.8 BACnet Communication Architecture Schematic

Provide a schematic showing the project's entire BACnet communication network, including addressing used for LANs, LAN devices including routers and bridges, gateways, controllers, workstations, and field interface devices. If applicable, show connection to existing networks.

1.5 SUBMITTALS

Submit detailed and annotated manufacturer's data, drawings, and specification sheets for each item listed, that clearly show compliance with the project specifications.

Government approval is required for submittals with a "G" designation; submittals not having a "G" designation are for Contractor Quality Control Approval. The following shall be submitted in accordance with Section 01 33 00 SUBMITTAL PROCEDURES:

SD-02 Shop Drawings

Include the following in the project's control system drawing set:

Control system drawings title sheet; G

List of I/O Points; G

Control System Components List; G

Control system schematics; G

HVAC Equipment Electrical Ladder diagrams; G

Component wiring diagrams; G

Terminal strip diagrams; G

BACnet communication architecture schematic; G

SD-03 Product Data

Direct Digital Controllers; G

Include BACnet PICS for each controller/device type, including smart sensors (B-SS) and smart actuators (B-SA).

BACnet Gateways; G

Include BACnet and workstation display information; bi-directional communication ability; compliance with interoperability schedule; expansion capacity; handling of alarms, events, scheduling and trend data; and single device capability (not depending on multiple devices for exchanging information from either side of the gateway).

Notebook Computer; G

Sensors and Input Hardware; G

Output Hardware; G

Surge and transient protection; G

Duct smoke detectors; G

Variable frequency (motor) drives; G

SD-05 Design Data

Performance Verification Testing Plan; G

Pre-Performance Verification Testing Checklist; G

SD-06 Test Reports

Performance Verification Testing Report; G

SD-07 Certificates

Contractor's Qualifications; G

SD-09 Manufacturer's Field Reports

Pre-PVT Checklist; G

SD-10 Operation and Maintenance Data

Comply with requirements for data packages in Section 01 78 23 OPERATION AND MAINTENANCE DATA and 01 78 24.00 20 FACILITY ELECTRONIC OPERATION AND MAINTENANCE SUPPORT INFORMATION (eOMSI), except as supplemented and modified in this specification.

BACnet Direct Digital Control Systems, Data Package 4; G

Controls System Operators Manuals, Data Package 4; G

VFD Service Manuals, Data Package 4; G

SD-11 Closeout Submittals

DDC Software; G

Training documentation; G

1.6 QUALITY ASSURANCE

1.6.1 Standard Products

Provide material and equipment that are standard manufacturer's products currently in production and supported by a local service organization.

1.6.2 Delivery, Storage, and Handling

Handle, store, and protect equipment and materials to prevent damage before and during installation according to manufacturer's recommendations, and as approved by the Contracting Officer. Replace damaged or defective items.

1.6.3 Operating Environment

Protect components from humidity and temperature variation, dust, and contaminants. If components are stored before installation, keep them within the manufacturer's limits.

1.6.4 Finish of New Equipment

New equipment finishing shall be factory provided. Manufacturer's standard factory finishing shall be proven to withstand 125 hours in a salt-spray fog test. Equipment located outdoors shall be proven to withstand 3000 hours in a salt-spray fog test.

Salt-spray fog test shall be according to ASTM B117, with acceptance criteria as follows: immediately after completion of the test, the finish shall show no signs of degradation or loss of adhesion beyond 0.125 inch on either side of the scratch mark.

1.6.5 Verification of Dimensions

The contractor shall verify all dimensions in the field, and advise the Contracting Officer of any discrepancy before performing work.

1.6.6 Contractor's Qualifications

Submit documentation certifying the controls Contractor performing the work has completed at least three DDC systems installations of a similar design to this project, and programmed similar sequences of operation for at least two years. Submit the name of the technician proposed to make

additions/alterations to the EMCS servers. Submit supporting documentation demonstrating their qualifications.

1.6.7 Modification of References

The advisory provisions in ASME B31.1 and NFPA 70 are mandatory. Substitute "shall" for "should" wherever it appears and interpret all references to the "authority having jurisdiction" and "owner" to mean the Contracting Officer.

1.6.8 Project Sequence

The control system work for this project shall proceed in the following order:

a. Submit and receive approval on the Shop Drawings, Product Data, and Certificates specified under the paragraph entitled "SUBMITTALS."

b. Perform the control system installation work, including all field check-outs and tuning.

c. Provide support to TAB personnel as specified under the paragraph "TEST AND BALANCE SUPPORT."

d. Submit and receive approval of the Controls System Operators Manual specified under the paragraph "CONTROLS SYSTEM OPERATORS MANUALS."

e. Submit and receive approval of the Performance Verification Testing Plan and the Pre-PVT Checklist specified under the paragraph "PERFORMANCE VERIFICATION TESTING."

f. Perform the Performance Verification Testing.

g. Submit and receive approval on the PVT Report.

h. Submit and receive approval on the Training Documentation specified under the paragraph "INSTRUCTION TO GOVERNMENT PERSONNEL" and "VFD Service Support". Submit at least 30 days before training.

i. Deliver the final Controls System Operators Manuals and VFD Service Manuals.

j. Conduct the Phase I Training and VFD on-site/hands-on training.

k. Conduct the Phase II Training.

l. Submit and receive approval of Closeout Submittals.

PART 2 PRODUCTS

2.1 DDC SYSTEM

Provide a networked DDC system for stand-alone control in compliance with the latest revision of the ASHRAE 135 BACnet standard. Include all programming, objects, and services required to meet the sequence of control. Provide BACnet MSTP communications between the DDC system and native BACnet devices furnished with HVAC equipment, and plant equipment such as boilers, and chillers when provided with BACnet MSTP communications. DDC controllers provided shall be certified in the BACnet

Testing Laboratories (BTL) Product Listing. BACnet over IP is not permitted.

2.1.1 Supervisory Building Controller (SBC)

Provide an SBC that communicates between the DDC system and the Camp Lejeune EMCS server. Provide all necessary hardware, drivers, software, material and equipment which shall allow communication and control between the SBC and the field DDC controllers using BACnet on the MS/TP bus. The SBC shall be capable of upload/download to and from the EMCS server. All SBC information shall transfer back to the EMCS system via the Ethernet TCP/IP level 1 network. All IP addresses and network drops shall be furnished by base telephone. Supervisory Building Controllers (SBC) must be listed and approved on the Marine Corps DADMS and listed in the sites DITSCAP SSAA documents. When the SBC is disconnected from the enterprise system for maintenance, access to the SBC shall be via a laptop computer with Internet Explorer and not require any proprietary licensed software or license key.

2.1.2 Direct Digital Controllers

Direct digital controllers shall be UL 916 rated.

2.1.2.1 I/O Point Limitation

The total number of I/O hardware points used by a single stand-alone digital controller, including I/O expansion units, shall not exceed 64. Place I/O expansion units in the same cabinet as the digital controller.

2.1.2.2 Environmental Limits

Controllers shall be suitable for, or placed in protective enclosures suitable for the environment (temperature, humidity, dust, and vibration) where they are located.

2.1.2.3 Stand-Alone Control

Provide stand-alone digital controllers capable of meeting the complete sequence of operation with and without network connectivity (being connected to the EMCS).

2.1.2.4 Internal Clock

Provide internal clocks for all BACnet Building Controllers (B-BC) and BACnet Advanced Application Controllers (B-AAC) using BACnet time synchronization services. Automatically synchronize system clocks daily from an operator-designated controller. The system shall automatically adjust for daylight saving time.

2.1.2.5 Memory

Provide sufficient memory for each controller to support the required control, communication, trends, alarms, and messages. Protect programs residing in memory with EEPROM, flash memory, or by an uninterruptible power source (battery or uninterruptible power supply). The backup power source shall have capacity to maintain the memory during a 72-hour continuous power outage. Rechargeable power sources shall be constantly charged while the controller is operating under normal line power. Batteries shall be replaceable without soldering. Trend and alarm history

collected during normal operation shall not be lost during power outages less than 72 hours long.

2.1.2.6 Immunity to Power Fluctuations

Controllers shall operate at 90 percent to 110 percent nominal voltage rating.

2.1.2.7 Transformer

The controller power supply shall be fused or current limiting and rated at 125 percent power consumption.

2.1.2.8 Wiring Terminations

Use screw terminal wiring terminations for all field-installed controllers. Provide field-removable modular terminal strip or a termination card connected by a ribbon cable for all controllers other than terminal units.

2.1.2.9 Input and Output Interface

Provide hard-wired input and output interface for all controllers as follows:

a. Protection: Shorting an input or output point to itself, to another point, or to ground shall cause no controller damage. Input or output point contact with sources up to 24 volts AC or DC for any duration shall cause no controller damage.

b. Binary Inputs: Binary inputs shall monitor two state devices.

c. Pulse Accumulation Inputs: Pulse accumulation inputs shall conform to binary input requirements and accumulate pulses at a resolution suitable to the application.

d. Analog Inputs: Analog inputs shall monitor low-voltage (0-10 VDC), current (4-20 mA), or resistance (thermistor or RTD) signals.

e. Binary Outputs: Binary outputs shall have a toggle switch and send a pulsed 24 VDC low-voltage signal for modulation control, or provide a maintained open-closed position for on-off control. For HVAC equipment and plant controllers, provide for manual overrides, either with three-position (on-off-auto) override switches and status lights, or with an adjacent operator display and interface. Where appropriate, provide a method to select normally open or normally closed operation.

f. Analog Outputs: Analog outputs shall send modulating 0-10 VDC or 4-20 mA signals to control output devices.

g. Tri-State Outputs: Tri-State outputs shall provide three-point floating control of terminal unit electronic actuators.

2.1.2.10 Digital Controller Cabinet

Provide each digital controller as factory mounted or in a factory fabricated cabinet enclosure. Cabinets located indoors shall protect against dust and have a minimum NEMA 1 rating, except where indicated otherwise. Cabinets located outdoors or in damp environments shall protect

against all outdoor conditions and have a minimum NEMA 4 rating. Mechanical rooms that contain steam service or equipment are considered damp environments. Outdoor control panels and controllers must be able to withstand extreme ambient conditions, without malfunction or failure, whether or not the controlled equipment is running. If necessary, provide a thermostatically controlled panel heater in freezing locations, and an internal ventilating fan in locations exposed to direct sunlight. Cabinets shall have a hinged lockable door and an offset removable metal back plate, except controllers integral with terminal units, like those mounted on VAV boxes. Provide like-keyed locks for all hinged panels provided and a set of two keys at each panel, with one key inserted in the lock.

2.1.2.11 Main Power Switch and Receptacle

Provide each control cabinet with a main external power on/off switch located inside the cabinet. Also provide each cabinet with a separate 120 VAC duplex receptacle.

2.1.2.12 DSL Modems

DSL modems and Rate Adaptive Asymmetric Digital Subscriber Line (RADSL) modems are provided by the government. Telephone modems are not permitted for any other communication with the DDC system.

2.1.2.13 BACnet Gateways

Provide gateways to connect BACnet to legacy systems, existing non-BACnet devices, and existing non-BACnet DDC controlled plant equipment, only when specifically requested and approved by the Government, and shown on the Government approved BACnet Communication Architecture Schematic. Communication shall be MS/TP. Communication using IP is not permitted. Provide with each gateway an interoperability schedule , showing each point or event on the legacy side that the BACnet "client" will read, and each parameter that the BACnet network will write to. Describe this interoperability in terms of BACnet services, or Interoperability Building Blocks (BIBBS), defined in ASHRAE 135 Annex K. Provide two-year minimum warranty for each gateway, including parts and labor.

The following minimum capabilities are required:

a. Gateways shall be able to read and view all readable object properties listed in the interoperability schedule on the non-BACnet network to the BACnet network and vice versa where applicable.

b. Gateways shall be able to write to all writeable object properties listed in the interoperability schedule on the non-BACnet network from the BACnet network and vice versa where applicable.

c. Gateways shall provide single-pass (only one protocol to BACnet without intermediary protocols) translation from the non-BACnet protocol to BACnet and vice versa.

d. Gateways shall meet the requirements of Data Sharing Read Property (DS-RP-B), Data Sharing Write Property (DS-WP-B), Device Management Dynamic Device Binding-B (DM-DDB-B), and Device Management Communication Control (DM-DCC-B) BIBBs, in accordance with ASHRAE 135.

e. Gateways shall include all hardware, software, software licenses, and configuration tools for operator-to-gateway communications. Provide

backup programming and parameters on CD media and the ability to modify, download, backup, and restore gateway configuration.

2.1.3 Notebook Computer

Provide a notebook computer, complete with the project's installed DDC software, configuration files and, applications database, to fully troubleshoot and program the project's devices. Provide the notebook computer with ballistic nylon carrying case with shoulder strap with all necessary cables and interface hardware needed for setup and communication with the controllers and control system components.

At a minimum the notebook computer shall include: Common Access Card reader, a Microsoft Windows 7 Enterprise operating system, processor with capability and speed required by application software, 40 giga-byte hard drive, 512 mega-byte RAM, 2 USB 2.0 ports, 10/100 network interface card, internal V.92 modem, 15-inch display, keyboard, 3-hour battery with charger, 52X internal CD-RW drive with CD creator software, and Microsoft Office bundled software. Provide all original licenses, installation media, documentation, and recovery CDs capable of restoring the original configuration. Provide the manufacturer's 3-year next business day on-site warranty with the Government listed as the warranty owner. Provide a CAC card access port.

2.1.4 DDC Software

2.1.4.1 Programming

Provide programming to execute the sequence of operation indicated. Provide all programming, programming software tools, and programming hardware tools to configure and program all controllers. If the laptop computer provided elsewhere is used as a programming tool, provide all necessary accessories for full functionality. All software shall be licensed to Marine Corps Base, Camp Lejeune Complex for unrestricted use on Camp Lejeune Complex and reproduction for use on Camp Lejeune Complex. Software keys and "dongles" are not permitted. Provide sequence of operation routines in simple, easy-to-follow logic with detailed text comments describing what the logic does and how it corresponds to the project's written sequence of operation.

a. Graphic-based programming shall use a library of function blocks made from pre-programmed code designed for BAS control. Function blocks shall be assembled with interconnecting lines, depicting the control sequence in a flowchart. If providing a computer with device programming tools as part of the project, graphic programs shall be viewable in real time showing present values and logical results from each function block.

b. Menu-based programming shall be done by entering parameters, definitions, conditions, requirements, and constraints.

c. For line-by-line and text-based programming, declare variable types (local, global, real, integer, etc.) at the beginning of the program. Use descriptive comments frequently to describe the programming.

d. If providing a computer with device programming tools as part of the project, provide a means for detecting program errors and testing software strategies with a simulation tool. Simulation may be inherent within the programming software suite, or provided by physical

controllers mounted in a NEMA 1 test enclosure. The test enclosure shall contain one dedicated controller of each type provided under this contract, complete with power supply and relevant accessories.

2.1.4.2 Parameter Modification

All writeable object properties, and all other programming parameters needed to comply with the project specification shall be adjustable for devices at any network level, including those accessible with web-browser communication, and regardless of programming methods used to create the applications.

2.1.4.3 Short Cycling Prevention

Provide setpoint differentials and minimum on/off times to prevent equipment short cycling.

2.1.4.4 Equipment Status Delay

Provide an adjustable delay from when equipment is commanded on or off and when the control program looks to the status input for confirmation.

2.1.4.5 Run Time Accumulation

Use the Elapsed Time Property to provide re-settable run time accumulation for each Binary Output Object connected to mechanical loads greater than 1 HP, electrical loads greater than 10 KW, or wherever else specified.

2.1.4.6 Timed Local Override

Provide a non-cumulative adjustable override time for the push of a local override button.

2.1.4.7 Time Synchronization

Provide time synchronization, including adjustments for leap years, daylight saving time, and operator time adjustments.

2.1.4.8 Scheduling

Provide operating schedules as indicated, with equipment assigned to groups. Changing the schedule of a group shall change the operating schedule of all equipment in the group. Groups shall be capable of operator creation, modification, and deletion. Provide capability to view and modify schedules in a seven-day week format. Provide capability to enter holiday and override schedules one full year at a time.

2.1.4.9 Object Property Override

Allow writeable object property values to accept overrides to any valid value. Where specified or required for the sequence of control, the Out Of Service property of Objects shall be modifiable using BACnet's write property service. When documented, exceptions to these requirement are allowed for life, machine, and process safeties.

2.1.4.10 Alarms and Events

Alarms and events shall be capable of having programmed time delays and high-low limits. All alarms/events shall report to the EMCS server.

Alarms/events shall be stored within the Site Building Controller (SBC). Provide alarms/events in agreement with the point schedule, sequence of operation, and the BAS Owner. At a minimum, provide programming to initiate alarms/events any time a piece of equipment fails to operate, a control point is outside normal range or condition shown on schedules, communication to a device is lost, a device has failed, or a controller has lost its memory.

2.1.4.11 Trending

Provide BACnet trend services capable of trending all object present values set points, and other parameters indicated for trending on project schedules. Trends may be associated into groups, and a trend report may be set up for each group. Trends are stored within a device on the BACnet network, with operator selectable trend intervals from 10 seconds up to 60 minutes. The minimum number of consecutive trend values stored at one time shall be 100 per variable. When trend memory is full, the most recent data shall overwrite the oldest data.

The SBC shall upload trends automatically upon reaching 3/4 of the device buffer limit (via Notification_Threshold property), by operator request, or by time schedule for archiving. Archived and real-time trend data shall be available for viewing numerically and graphically for at the workstation and connected notebook computers.

2.1.4.12 Device Diagnostics

Each controller shall have diagnostic LEDs for power, communication, and device fault condition. The DDC system shall recognize and report a non-responsive controller.

2.1.4.13 Power Loss

Upon restoration of power, the DDC system shall perform an orderly restart and restoration of control.

2.1.4.14 Access Control

Provide at least five levels of password protection for operator interfaces. The lowest level only allowing viewing of graphics. The second level allows viewing graphics and changing space temperature setpoints. The third level allows the previous level's capability, plus changing operating schedules. The fourth level allows access to all functions except passwords. The highest level provides all administrator rights and allows full access to all programming, including setting new passwords and access levels. Provide the BAS Owner with the highest level password access. Provide automatic log out if no keyboard or mouse activity is detected after a user-defined time delay.

2.1.4.15 Configuration Tool

Provide the software with the manufacturer's installation CDs and licenses. Licenses shall allow unrestricted use and reproduction for use at the Camp Lejeune Complex. Software shall not require the use of software keys or "dongles" Configure the software according to the DDC system manufacturer's specifications and in agreement with BACnet standards found in ASHRAE 135, Annex L.

The software shall permit complete monitoring, modification, and

troubleshooting interface with the DDC system. The operator interface with the software shall be menu-driven with appropriate displays and menu commands to manipulate the DDC system's objects, point data, operating schedules, control routines, system configuration, trends, alarms, messages, graphics, and reports. Trends shall be capable of graphic display in real time, with variables plotted as functions of time. Each alarmed point shall be capable of displaying its alarm history, showing when it went into alarm, if and when it was acknowledged, and when it went out of alarm. The modification of DDC system parameters and object properties shall be accomplished with "fill in the blank" and/or "point and drag" methods. Modifications shall download to the appropriate controllers at the operator's request.

2.1.4.16 Graphics Software

Provide web-based system graphics viewable on browsers compatible with MS Internet Explorer 6.X or greater using an industry-standard file format such as HTML, BMP, JPEG, or GIF. Graphics for new projects must be consistent with base standards including layout and device naming. Contractor shall install this graphics package on the EMCS Server, bind all points, and demonstrate operability.

Graphic displays shall have full-screen resolution when viewed on the workstation and notebook computers. Dynamic data on graphics pages shall refresh within 10 seconds using an Internet connection, or 30 seconds using a dial-up modem connection. Graphics viewing shall not require additional "plug-in" software like Java, Shockwave and Flash applications unless the software is readily available for free over the Internet, and certified for use with Government provided personal computers.

The graphics shall show the present value and object name for each of the project's I/O points on at least one graphic page. Arrange point values and names on the graphic displays in their appropriate physical locations with respect to the floor plan or equipment graphic displayed. Graphics shall allow the operator to monitor current status, view zone and equipment summaries, use point-and-click navigation between graphic pages, and edit setpoints and parameters directly from the screens. Items in alarm shall be displayed using a different color or other obvious visual indicator. Provide graphics with the following:

a. Graphic Types: Provide at least one graphic display for each piece of HVAC equipment, building floor, and controlled zone. Indicate dynamic point values, operating statuses, alarm conditions, and control setpoints on each display. Provide summary pages where appropriate.

   (1) Building Floor Plans: Provide a floor plan graphic for each of the building's floors with dynamic display of space temperature and other important data. If used, indicate and provide links to sub-plan areas. If possible, use the project's electronic drawing files for the graphic backgrounds. Provide clear names for important areas, such as "Main Conference Room." Include room names and numbers where applicable. Include features such as stairwells, elevators, and main entrances. Where applicable, include the mechanical room, HVAC equipment, and control component locations, with corresponding links to the equipment graphics.

   (2) Sub-plan Areas: Where a building's floor plan is too large to adequately display on the screen, sub-divide the plan into distinct areas, and provide a separate graphic display for each

area. Provide same level of detail requested in building floor plan section above.

(3) HVAC Equipment: Provide a graphic display for each piece of HVAC equipment, such as a fan coil unit, VAV terminal, or air handling unit. Equipment shall be represented by a two or three-dimensional drawing. Where multiple pieces of equipment combine to form a system, such as a central chiller plant or central heating plant, provide one graphic to depict the entire plant. Indicate the equipment, piping, ductwork, dampers, and control valves in the installed location. Include labels for equipment, piping, ductwork, dampers, and control valves. Show the direction of air and water flow. Include dynamic display of applicable object data with clear names in appropriate locations.

(4) Sequence of Operation: Provide a graphic screen displaying the written out full sequence of operation for each piece of HVAC equipment. Provide a link to the sequence of operation displays on their respective equipment graphics. Include dynamic real-time data within the text for setpoints and variables.

b. Graphic Title: Provide a prominent, descriptive title on each graphic page.

c. Dynamic Update: When the workstation is on-line, all graphic I/O object values shall update with change-of-value services, or by operator selected discrete intervals.

d. Graphic Linking: Provide forward and backward linking between floor plans, sub-plans, and equipment.

e. Graphic Editing: Provide installed software to create, modify, and delete the DDC graphics. Include the ability to store graphic symbols in a symbol directory and import these symbols into the graphics.

f. Dynamic Point Editing: Provide full editing capability for deleting, adding, and modifying dynamic points on the graphics.

2.2 SENSORS AND INPUT HARDWARE

Coordinate sensor types with the BAS Owner to keep them consistent with existing installations.

2.2.1 Field-Installed Temperature Sensors

Where feasible, provide the same sensor type throughout the project. Avoid using transmitters unless absolutely necessary.

2.2.1.1 Thermistors

Precision thermistors may be used in applications below 200 degrees F. Sensor accuracy over the application range shall be 0.36 degree F or less between 32 to 150 degrees F. Stability error of the thermistor over five years shall not exceed 0.25 degrees F cumulative. A/D conversion resolution error shall be kept to 0.1 degrees F. Total error for a thermistor circuit shall not exceed 0.5 degrees F.

2.2.1.2 Resistance Temperature Detectors (RTDs)

Provide RTD sensors with platinum elements compatible with the digital controllers. Encapsulate sensors in epoxy, series 300 stainless steel, anodized aluminum, or copper. Temperature sensor accuracy shall be 0.1 percent (1 ohm) of expected ohms (1000 ohms) at 32 degrees F. Temperature sensor stability error over five years shall not exceed 0.25 degrees F cumulative. Direct connection of RTDs to digital controllers without transmitters is preferred. When RTDs are connected directly, lead resistance error shall be less than 0.25 degrees F. The total error for a RTD circuit shall not exceed 0.5 degrees F. Allow an additional 0.5 percent accuracy for averaging sensors.

2.2.1.3 Temperature Sensor Details

a. Room Type: Provide the sensing element components within a decorative protective cover suitable for surrounding decor. Provide a communication port for a portable operator interface like a notebook computer or PDA.

b. Duct Probe Type: Ensure the probe is long enough to properly sense the air stream temperature.

c. Duct Averaging Type: Continuous averaging sensors shall be one foot in length for each 4 square feet of duct cross-sectional area, and a minimum length of 6 feet.

d. Pipe Immersion Type: Provide minimum three-inch immersion. Provide each sensor with a corresponding pipe-mounted sensor well, unless indicated otherwise. Sensor wells shall be stainless steel when used in steel piping, and brass when used in copper piping. Provide the sensor well with a heat-sensitive transfer agent between the sensor and the well interior.

e. Outside Air Type: Provide the sensing element on the building's north side with a protective weather shade that positions the sensor approximately 3 inches off the wall surface, does not inhibit free air flow across the sensing element, and protects the sensor from snow, ice, and rain.

2.2.2 Transmitters

Provide transmitters with 4 to 20 mA or 0 to 10 VDC linear output scaled to the sensed input. Transmitters shall be matched to the respective sensor, factory calibrated, and sealed. Size transmitters for an output near 50 percent of its full-scale range at normal operating conditions. The total transmitter error shall not exceed 0.1 percent at any point across the measured span. Supply voltage shall be 12 to 24 volts AC or DC. Transmitters shall have non-interactive offset and span adjustments. For temperature sensing, transmitter drift shall not exceed 0.03 degrees F a year.

2.2.2.1 Relative Humidity Transmitters

Provide transmitters with an accuracy equal to plus or minus 3 percent from 0 to 90 percent scale, and less than one percent drift per year. Sensing elements shall be the polymer type.

2.2.2.2 Pressure Transmitters

Provide transmitters integral with the pressure transducer.

2.2.3 Current Transducers

Provide current transducers to monitor motor amperage. Current switches may be used to indicate on/off status.

2.2.4 Air Quality Sensors

Provide power supply for each sensor.

2.2.4.1 CO2 Sensors

Provide photo-acoustic type CO2 sensors with integral transducers and linear output. The devices shall read CO2 concentrations between 0 and 2000 ppm with full scale accuracy of at least plus or minus 100 ppm.

2.2.4.2 Air Quality Sensors

Provide full spectrum air quality sensors using a hot wire element based on the Taguchi principle. The sensor shall monitor a wide range of gaseous volatile organic components common in indoor air contaminants like paint fumes, solvents, cigarette smoke, and vehicle exhaust. The sensor shall automatically compensate for temperature and humidity, have span and calibration potentiometers, operate on 24 VDC power with output of 0-10 VDC, and have a service rating of 32 to 140 degrees F and 5 to 95 percent relative humidity.

2.2.5 Input Switches

2.2.5.1 Timed Local Overrides

Provide buttons or switches to override the DDC occupancy schedule programming for each major building zone during unoccupied periods, and to return HVAC equipment to the occupied mode. This requirement is waived for zones clearly intended for 24 hour continuous operation.

2.2.6 Air Flow Measurement Stations

Air flow measurement stations shall have an array of velocity sensing elements and straightening vanes inside a flanged sheet metal casing. The velocity sensing elements shall be the RTD or thermistor type, traversing the ducted air in at least two directions. The air flow pressure drop across the station shall not exceed 0.1 inch water gage at a velocity of 2,000 fpm. The station shall be suitable for air flows up to 2500 fpm, and a temperature range of 0 to 140 degrees F. The station's measurement accuracy over the range of 125 to 2,500 fpm shall be plus or minus 3 percent of the measured velocity. Station transmitters shall provide a linear, temperature-compensated 4 to 20 mA or 0 to 10 VDC output. The output shall be capable of being accurately converted to a corresponding air flow rate in cubic feet per minute. Transmitters shall be a 2-wire, loop powered device. The output error of the transmitter shall not exceed 0.5 percent of the measurement.

2.2.7 Energy Metering

Provide energy meters to collect steam and water consumption, and hot water

solar collector generation for the facility and report to the EMCS database.

2.2.7.1 Water meters

Water meters 1" and smaller shall be positive displacement nutating disk. Water meters larger than 1" shall be compound type. Output signal shall be 4-10 ma, pulse, or BACnet(MS/TP).

2.3 OUTPUT HARDWARE

2.3.1 Control Dampers

Provide factory manufactured aluminum blade/galvanized steel frame dampers where indicated. Control dampers shall comply with SMACNA 1966 except as modified or supplemented by this specification. Published damper leakage rates and respective pressure drops shall have been verified by tests in compliance with AMCA 500-D requirements.

Provide damper assembly frames constructed of 13 gauge minimum thickness galvanized steel channels with mitered and welded corners. Damper axles shall be 0.5 inches minimum diameter plated steel rods supported in the damper frame by stainless steel or bronze bearings. Blades mounted vertically shall be supported by thrust bearings.

Dampers shall be rated for not less than 2000 fpm air velocity. The pressure drop through each damper when full-open shall not exceed 0.04 inches water gage at 1000 fpm face velocity. Damper assemblies in ductwork subject to above 3-inch water gauge static air pressure shall be constructed to meet SMACNA Seal Class "A" construction requirements.

Provide the damper operating linkages outside of the air stream, including crank arms, connecting rods, and other hardware that transmits motion from the damper actuators to the dampers, shall be adjustable. Additionally, operating linkages shall be designed and constructed to have a 2 to 1 safety factor when loaded with the maximum required damper operating force. Linkages shall be brass, bronze, galvanized steel, or stainless steel.

Provide access doors or panels in hard ceilings and walls for access to all concealed damper operators and damper locking setscrews.

For field-installed control dampers, a single damper section shall have blades no longer than 48 inches and no higher than 72 inches. The maximum damper blade width shall be 12 inches. Larger sized dampers shall be built using a combination of sections.

Frames shall be at least 2 inches wide. Flat blades shall have edges folded for rigidity. Blades shall be provided with compressible gasket seals along the full length of the blades to prevent air leakage when closed.

The damper frames shall be provided with jamb seals to minimize air leakage. Seals shall be suitable for an operating temperature range of minus 40 degrees F to 200 degrees F.

The leakage rate of each damper when full-closed shall be no more than 2 cfm per sq. foot of damper face area at 1.0 inches water gage static pressure.

2.3.2 Control Valves

2.3.2.1 Valve Assembly

Valve bodies shall be designed for 125 psig minimum working pressure or 150 percent of the operating pressure, whichever is greater. Valve stems shall be Type 300 series stainless steel. Valve leakage ratings shall be 0.01 percent of rated Cv value. Class 125 copper alloy valve bodies and Class 150 steel or stainless steel valves shall meet the requirements of ASME B16.5. Cast iron valve components shall meet the requirements of ASTM A126 Class B or C.

2.3.2.2 Butterfly Valves

Butterfly valves shall be the threaded lug type suitable for dead-end service and for modulation to the fully-closed position, with stainless steel shafts supported by bearings, non-corrosive discs geometrically interlocked with or bolted to the shaft (no pins), and EPDM seats suitable for temperatures from minus 20 degrees F to plus 250 degrees F. Valves shall have a means of manual operation independent of the actuator.

2.3.3 Actuators

Provide direct-drive electric actuators for all control applications, except where indicated otherwise.

2.3.3.1 Electric Actuators

Each actuator shall deliver the torque required for continuous uniform motion and shall have internal end switches to limit the travel, or be capable of withstanding continuous stalling without damage. Actuators shall function properly within 85 to 110 percent of rated line voltage. Provide actuators with hardened steel running shafts and gears of steel or copper alloy. Fiber or reinforced nylon gears may be used for torques less than 16 inch-pounds. Provide two-position actuators of single direction, spring return, or reversing type. Provide modulating actuators capable of stopping at any point in the cycle, and starting in either direction from any point. Actuators shall be equipped with a switch for reversing direction, and a button to disengage the clutch to allow manual adjustments. Provide the actuator with a hand crank for manual adjustments, as applicable. Actuators without spring-return may only be used on terminal fan coil units, terminal VAV units, convectors, and unit heaters. Spring return actuators shall be provided on all control dampers and all control valves except terminal fan coil units, terminal VAV units, convectors, and unit heaters; unless indicated otherwise. Each actuator shall have distinct markings indicating the full-open and full-closed position, and the points in-between.

2.3.4 Output Switches

2.3.4.1 Control Relays

Field installed and DDC panel relays shall be double pole, double throw, UL listed, with contacts rated for the intended application, indicator light, and dust proof enclosure. The indicator light shall be lit when the coil is energized and off when coil is not energized. Relays shall be the socket type, plug into a fixed base, and replaceable without tools or removing wiring. Encapsulated "PAM" type relays may be used for terminal control applications.

2.4 ELECTRICAL POWER AND DISTRIBUTION

2.4.1 Transformers

Transformers shall conform to UL 506. For control power other than terminal level equipment, provide a fuse or circuit breaker on the secondary side of each transformer.

2.4.2 Surge and Transient Protection

Provide each digital controller with surge and transient power protection. Surge and transient protection shall consist of the following devices, installed externally to the controllers.

2.4.2.1 Power Line Surge Protection

Provide surge suppressors on the incoming power at each controller or grouped terminal controllers. Surge suppressors shall be rated in accordance with UL 1449, have a fault indicating light, and conform to the following:

a. The device shall be a transient voltage surge suppressor, hard-wire type individual equipment protector for 120 VAC/1 phase/2 wire plus ground.

b. The device shall react within 5 nanoseconds and automatically reset.

c. The voltage protection threshold, line to neutral, shall be no more than 211 volts.

d. The device shall have an independent secondary stage equal to or greater than the primary stage joule rating.

e. The primary suppression system components shall be pure silicon avalanche diodes.

f. The secondary suppression system components shall be silicon avalanche diodes or metal oxide varistors.

g. The device shall have an indication light to indicate the protection components are functioning.

h. All system functions of the transient suppression system shall be individually fused and not short circuit the AC power line at any time.

i. The device shall have an EMI/RFI noise filter with a minimum attenuation of 13 dB at 10 kHz to 300 MHz.

j. The device shall comply with IEEE C62.41.1 and IEEE C62.41.2, Class "B" requirements and be tested according to IEEE C62.45.

k. The device shall be capable of operating between minus 20 degrees F and plus 122 degrees F.

2.4.3 Wiring

Provide complete electrical wiring for the DDC System, including wiring to transformer primaries. Unless indicated otherwise, provide all normally

visible or otherwise exposed wiring in conduit. Where conduit is required, control circuit wiring shall not run in the same conduit as power wiring over 100 volts. Circuits operating at more than 100 volts shall be in accordance with Section 26 20 00, INTERIOR DISTRIBUTION SYSTEM. Run all circuits over 100 volts in conduit, metallic tubing, covered metal raceways, or armored cable. Use plenum-rated cable for circuits under 100 volts in concealed accessible spaces. Examples of these spaces include HVAC plenums, within walls, above suspended ceilings, in attics, and within ductwork. All wiring in mechanical rooms and mezzanines shall be run in conduit.

2.4.3.1 Power Wiring

The following requirements are for field-installed wiring:

a. Wiring for 24 V circuits shall be insulated copper 18 AWG minimum and rated for 300 VAC service.

b. Wiring for 120 V circuits shall be insulated copper 14 AWG minimum and rated for 600 VAC service.

2.4.3.2 Analog Signal Wiring

Field-installed analog signal wiring shall be in accordance with manufacturer's installation instructions. Each cable shall be 100 percent shielded and have a 20 AWG drain wire. Each wire shall have insulation rated for 300 VAC service. Cables shall have an overall aluminum-polyester or tinned-copper cable-shield tape.

2.5 FIRE PROTECTION DEVICES

2.5.1 Duct Smoke Detectors

Provide duct smoke detectors in HVAC ducts in accordance with NFPA 72 and NFPA 90A, except as indicated otherwise. Provide UL listed or FM approved detectors, designed specifically for duct installation.

Furnish detectors under Section 28 31 76.00 22 INTERIOR COMBINATION EMERGENCY COMMUNICATIONS SYSTEMS and install under this section. Connect new detectors to the building fire alarm panel.

Provide photoelectric type detectors. Detectors shall detect both visible and invisible particles of combustion, and shall not be susceptible to undesired operation by changes to relative humidity. Provide each detector with an approved duct housing mounted exterior to the duct, and an integral perforated sampling tube extending across the width of the duct. The detector housing shall have indicator lamps that light when the detector is powered and when the detector is activated. Each detector shall have an integral test port and test switch. Connect new detectors to the building's existing fire alarm control panel. Provide control and power modules required for the operation of the detectors in their own new control unit or integral with the existing fire alarm panel. A ground fault, break, or open condition in the electrical circuitry to any detector or its control or power unit shall cause activation of a trouble signal at the building fire alarm panel. Electrical supervision of wiring used exclusively for air-handling unit shutdown is not required, provided a break in the wiring would cause shutdown of the associated unit. Equipment and devices shall be compatible and operable in all respects with, and shall in no way impair the reliability or operational functions of, the

existing fire alarm system. Provide descriptive zone labels at the existing fire alarm panel indicating which new air-handling unit detectors they serve and their location. Label zones modified in order to accomplish the work.2.6 VARIABLE FREQUENCY (MOTOR) DRIVES

Provide variable frequency drives (VFDs) as indicated. VFDs shall convert 240 or 460 volt (plus or minus 10 percent), three phase, 60 hertz (plus or minus 2Hz), utility grade power to adjustable voltage/frequency, three phase, AC power for stepless motor control from 5 percent to 105 percent of base speed. VFDs shall be UL listed as delivered to the end user. The VFD shall meet the requirements specified in the most current National Electrical Code. Each VFD shall also meet the following:

a. The VFD shall use sine coded Pulse Width Modulation (PWM) technology. PWM calculations shall be performed by the VFD microprocessor.

b. The VFD shall be capable of automatic control by a remote 4-20 mA 0 to 10 VDC signal, BACnet interface, or manually by the VFD control panel.

2.6.1 VFD Quality Assurance

VFDs shall be the manufacturer's current standard production unit with at least 10 identical units successfully operating in the field.

2.6.2 VFD Service Support

a. Warranty: Provide the VFDs with a minimum 24-month full parts and labor warranty. The warranty shall start when the contract's HVAC system is accepted by the Government. Include warranty documentation, dates, and contact information with the VFD on-site service manuals.

b. VFD Service Manuals: Provide the VFDs with all necessary installation, operation, maintenance, troubleshooting, service, and repair manuals in English including related factory technical bulletins. Provide the documents factory bound, in sturdy 3-ring binders, or hard bound covers. Provide a title sheet on the outside of each binder indicating the project title, project location, installing contractor, contract number, and the VFD manufacturer, address, and telephone number. Each binder shall include a table of contents and tabbed dividers, with all material neatly organized. The documentation provided shall be specifically applicable to this project, shall be annotated to reflect the actual project conditions, and shall provide a complete and concise depiction of the installed work.

c. Technical Support: Provide the VFDs with manufacturer's technical telephone support in English, readily available during normal working hours, and free of charge for the life of the equipment.

d. Initial Start-Up: Provide the VFDs with factory-trained personnel for the on-site start-up of the HVAC equipment and associated VFD. The personnel shall be competent in the complete start-up, operation, and repair of the particular model VFD installed. The factory start-up representative shall perform the factory's complete recommended start-up procedures and check-out tests on the VFD. Include a copy of the start-up test documentation with the VFD on-site service manuals.

e. Provide the VFDs with on-site/hands-on training for the user and maintenance personnel. Provide a capable and qualified instructor with minimum two years field experience with the operation and maintenance

of similar VFDs. The training shall occur during normal working hours and last not less than 2 hours. Coordinate the training time with the Contracting Officer and the end user. The VFD service manuals shall be used during the training. The contractor shall ensure the manuals are on-site before the start of training. The training shall cover all operational aspects of the VFD.

2.6.3 VFD Features

VFDs shall have the following features:

a. A local operator control keypad capable of:

(1) Remote/Local operator selection with password access.

(2) Run/Stop and manual speed commands.

(3) All programming functions.

(4) Scrolling through all display functions.

b. Digital display capable of indicating:

(1) VFD status.

(2) Frequency.

(3) Motor RPM.

(4) Phase current.

(5) Fault diagnostics in descriptive text.

(6) All programmed parameters.

c. Standard PI loop controller with input terminal for controlled variable and parameter settings.

d. User interface terminals for remote control of VFD speed, speed feedback, and an isolated form C SPDT relay, which energizes on a drive fault condition.

e. An isolated form C SPDT auxiliary relay which energizes on a run command.

f. A metal NEMA 1 enclosure for indoors, NEMA 4 with heater for outdoors.

g. An adjustable carrier frequency with 16 KHz minimum upper limit.

h. A built in or external line reactor with 3 percent minimum impedance to protect the VFDs DC buss capacitors and rectifier section diodes.

2.6.4 Programmable Parameters

VFDs shall include the following operator programmable parameters:

a. Upper and lower limit frequency.

b. Acceleration and Deceleration rate.

c. Variable torque volts per Hertz curve.

d. Starting voltage level.

e. Starting frequency level.

f. Display speed scaling.

g. Enable/disable auto-restart feature.

h. Enable/disable soft stall feature.

i. Motor overload level.

j. Motor stall level.

k. Jump frequency and hysteresis band.

l. PWM carrier frequency.

2.6.5 Protective Features

VFDs shall have the following protective features:

a. An electronic adjustable inverse time current limit with consideration for additional heating of the motor at frequencies below 45Hz, for the protection of the motor.

b. An electronic adjustable soft stall feature, allowing the VFD to lower the frequency to a point where the motor will not exceed the full-load amperage when an overload condition exists at the requested frequency. The VFD will automatically return to the requested frequency when load conditions permit.

c. A separate electronic stall at 110 percent VFD rated current, and a separate hardware trip at 190 percent current.

d. Ground fault protection that protects the output cables and motor from grounds during both starting and continuous running conditions.

e. The ability to restart after the following faults:

(1) Overcurrent (drive or motor).

(2) Power outage.

(3) Phase loss.

(4) Over voltage/Under voltage.

f. The ability shut down if inadvertently started into a rotating load without damaging the VFD or the motor.

g. The ability to keep a log of a minimum of four previous fault conditions, indicating the fault type and time of occurrence in descriptive text.

h. The ability to sustain 110 percent rated current for 60 seconds

i. The ability to shutdown safely or protect against and record the following fault conditions:

(1) Over current (and an indication if the over current was during acceleration, deceleration, or running).

(2) Over current internal to the drive.

(3) Motor overload at start-up.

(4) Over voltage from utility power.

(5) Motor running overload.

(6) Over voltage during deceleration.

(7) VFD over heat.

(8) Load end ground fault.

(9) Abnormal parameters or data in VFD EEPROM.

2.6.6 Minimum Operating Conditions

VFDs shall be designed and constructed to operate within the following service conditions:

a. Ambient Temperature Range, 0 to 120 degrees F.

b. Non-condensing relative humidity to 90 percent.

2.6.7 Additional Features

Provide VFDs with the following additional features:

a. BACnet MS/TP communication interface port

b. RFI/EMI filters

c. One spare VFD of each model provided, fully programmed and ready for back-up operation when connected.

PART 3 EXECUTION

3.1 INSTALLATION

Perform the installation under the supervision of competent technicians regularly employed in the installation of DDC systems.

3.1.1 BACnet Naming and Addressing

Coordinate with the EMCS Owner and provide naming and addressing consistent with existing buildings already loaded on the EMCS server. All DDC controllers shall have a Camp Lejeune unique instance number and all Site Building Controllers shall have a Camp Lejeune unique name.

a. MAC Address

Every BACnet device shall have an assigned and documented MAC Address unique to its network. For Ethernet networks, document the MAC Address assigned at its creation. For ARCNET or MS/TP, assign from 4 to 128.

b. Network Numbering

Assign unique numbers to each new network installed on the BACnet internetwork. Provide ability for changing the network number; either by device switches, network computer, or field operator interface. The BACnet internetwork (all possible connected networks) can contain up to 65,534 possible unique networks.

c. Device Object Identifier Property Number

Assign unique Device "Object_Identifier" property numbers or device instances for each device on the BACnet internetwork. Provide for future modification of the device instance number; either by device switches, network computer, or field interface. BACnet allows up to 4,194,302 possible unique devices per internetwork.

d. Device Object Name Property Text

The Device Object Name property field shall support 32 minimum printable characters. Assign unique Device "Object_Name" property names with plain-English descriptive names for each device
For example, the Device Object Name for the device controlling the first floor air handler unit at Building AS4035 would be:

Name=Air Station.AS4035.First Floor.Air Handling Unit.AHU-1-A

e. Object Name Property Text (Other than Device Objects)

The Object Name property field shall support 32 minimum printable characters. Assign Object Name properties with plain-English names descriptive of the application. Examples include "Zone 1 Temperature" and "Fan Start/Stop".

f. Object Identifier Property Number (Other than Device Objects)

Assign Object Identifier property numbers according to design drawings or tables if provided. If not provided, Object Identifier property numbers may be assigned at the Contractor's discretion but must be approved by the Government. In this case they must be documented and unique for like object types within the device.

3.1.2 Minimum BACnet Object Requirements

a. Use of Standard BACnet Objects in accordance with existing Camp Lejeune standards

For the following points and parameters, use standard BACnet objects, where all relevant object properties can be read using BACnet's Read Property Service, and all relevant object properties can be modified using BACnet's Write Property Service:
all device physical inputs and outputs, all set points, all PID tuning parameters, all calculated pressures, flow rates, and consumption values, all alarms, all trends, all schedules, and all equipment and lighting circuit operating status.

b. BACnet Object Description Property

The Object Description property shall support 32 minimum printable characters. For each object, complete the description property field using a brief, narrative, plain English description specific to the object and project application. For example: "HW Pump 1 Proof." Document compliance, length restrictions, and whether the description is writeable in the device PICS.

c. Analog Input, Output, and Value Objects

Support and provide Description and/or Device_Type text strings matching signal type and engineering units shown on the points list.

d. Binary Input, Output, and Value Objects

Support and provide Inactive_Text and Active_Text property descriptions matching conditions shown on the points list.

e. Calendar Object

For devices with scheduling capability, provide at least one Calendar Object with ten-entry capacity. All operators may view Calendar Objects; authorized operators may make modifications from a workstation. Enable the writeable Date List property and support all calendar entry data types.

f. Schedule Object

Use Schedule Objects for all building system scheduling. All operators may view schedule entries; authorized operators may modify schedules from a workstation.

g. Loop Object or Equal

Use Loop Objects or equivalent BACnet objects in each applicable field device for PID control. Regardless of program method or object used, allow authorized operators to adjust the Update Interval, Setpoint, Proportional Constant, Integral Constant, and Derivative Constant using BACnet read/write services.

3.1.3 Minimum BACnet Service Requirements

a. Command Priorities

Use commandable BACnet objects to control machinery and systems, providing the priority levels listed below. If the sequence of operation requires a different priority, obtain approval from the Contracting Officer.

Priority Level	Application
1	Manual-Life Safety
2	Automatic-Life Safety
3	(User Defined)
4	(User Defined)
5	Critical Equipment Control
6	Minimum On/Off
7	(User Defined)

Priority Level	Application
8	Manual Operator
9	(User Defined)
10	(User Defined)
11	Load Shedding
12	(User Defined)
13	(User Defined)
14	(User Defined)
15	(User Defined)
16	(User Defined)

b. Alarming

(1) Alarm Priorities - Coordinate alarm and event notification with the BAS Owner.

(2) Notification Class - Enable writeable Priority, Ack Required, and Recipient List properties of Notification Class objects.

(3) Event Notification Message Texts - Use condition specific narrative text and numerical references for alarm and event notification.

c. Updating Displayed Property Values

Allow workstations to display property values at discrete polled intervals, or based on receipt of confirmed and unconfirmed Change of Value notifications. The COV increment shall be adjustable by an operator using BACnet services, and polled intervals shall be adjustable at the operator workstation.

3.1.4 Local Area Networks

Obtain Government approval before connecting new networks with existing networks. Network numbers and device instance numbers shall remain unique when joining networks. Do not change existing network addressing without Government approval. See also "BACnet Naming and Addressing".

3.1.5 BACnet Routers, Bridges, and Switches

Provide the quantity of BACnet routers, bridges, and switches necessary for communications shown on the BACnet Communication Architecture schematic. Provide BACnet routers with BACnet Broadcast Message Device (BBMD) capability on each BACnet internetwork communicating across an MS/TP network. Configure each BACnet device and bridge, router, or switch to communicate on its network segment. All switches provided by the contractor shall be approved by base telephone.

3.1.6 Wiring Criteria

a. Run circuits operating at more than 100 volts in rigid or flexible conduit, metallic tubing, covered metal raceways, or armored cable.

b. Do not run binary control circuit wiring in the same conduit as power wiring over 100 volts. Where analog signal wiring requires conduit, do not run in the same conduit with AC power circuits or control circuits operating at more than 100 volts.

c. Provide circuit and wiring protection required by NFPA 70.

d. Run all wiring located inside mechanical rooms in conduit.

e. Do not bury aluminum-sheathed cable or aluminum conduit in concrete.

f. Input/output identification: Permanently label each field-installed wire, cable, and pneumatic tube at each end with descriptive text using a commercial wire marking system that fully encircles the wire, cable, or tube. Locate the markers within 2 inches of each termination. Match the names and I/O number to the project's point list. Similarly label all power wiring serving control devices, including the word "power" in the label. Number each pneumatic tube every six feet. Label all terminal blocks with alpha/numeric labels. All wiring and the wiring methods shall be in accordance with UL 508A.

g. For controller power, provide new 120 VAC circuits, with ground, if not defined on the electrical drawings. Provide each circuit with a dedicated breaker, and run wiring in its own conduit, separate from any control wiring. Connect the controller's ground wire to the electrical panel ground; conduit grounds are not acceptable.

h. Surge Protection: Install surge protection according to manufacturer's instructions. Multiple controllers fed from a common power supply may be protected by a common surge protector, properly sized for the total connected devices.

i. Grounding: Ground controllers and cabinets to a good earth ground as specified in Section 26 20 00 INTERIOR DISTRIBUTION SYSTEM. Conduit grounding is not acceptable; all grounding shall have a direct path to the building earth ground. Ground sensor drain wire shields at the controller end.

j. The Contractor shall be responsible for correcting all associated ground loop problems.

k. Run wiring in panel enclosures in covered wire track.

3.1.7 Accessibility

Install all equipment so that parts requiring periodic inspection, operation, maintenance, and repair are readily accessible. Install digital controllers, data ports, and concealed actuators, valves, dampers, and like equipment in locations freely accessible through access doors.

3.1.8 Digital Controllers

a. Install as stand alone control devices (see definitions).

b. Locate control cabinets at the locations shown on the drawings. If not shown on the drawings, install in the most accessible space, close to the controlled equipment.

3.1.9 Hand-Off-Auto Switches

Wire safety controls such as smoke detectors and freeze protection thermostats to protect the equipment during both hand and auto operation.

3.1.10 Temperature Sensors

Install temperature sensors in locations that are accessible and provide a good representation of sensed media. Installations in dead spaces are not acceptable. Calibrate sensors according to manufacturer's instructions. Do not use sensors designed for one application in a different application.

3.1.10.1 Room Temperature Sensors

Mount the sensors on interior walls to sense the average room temperature at the locations indicated. Avoid locations near heat sources such as copy machines or locations by supply air outlet drafts. Mount the center of the sensor 54 inches above the floor to meet ADA requirements.

3.1.10.2 Duct Temperature Sensors

a. Probe Type: Provide a gasket between the sensor housing and the duct wall. Seal the duct penetration air tight. Seal the duct insulation penetration vapor tight.

b. Averaging Type (and coil freeze protection thermostats): Weave the capillary tube sensing element in a serpentine fashion perpendicular to the flow, across the duct or air handler cross-section, using durable non-metal supports. Prevent contact between the capillary and the duct or air handler internals. Provide a duct access door at the sensor location. The access door shall be hinged on the side, factory insulated, have cam type locks, and be as large as the duct will permit, maximum 18 by 18 inches. For sensors inside air handlers, the sensors shall be fully accessible through the air handler's access doors without removing any of the air handler's internals.

3.1.10.3 Immersion Temperature Sensors

Provide thermowells for sensors measuring piping, tank, or pressure vessel temperatures. Locate wells to sense continuous flow conditions. Do not install wells using extension couplings. Where piping diameters are smaller than the length of the wells, provide wells in piping at elbows to sense flow across entire area of well. Wells shall not restrict flow area to less than 70 percent of pipe area. Increase piping size as required to avoid restriction. Provide thermal conductivity material within the well to fully coat the inserted sensor.

3.1.10.4 Outside Air Temperature Sensors

Provide outside air temperature sensors in weatherproof enclosures on the north side of the building, away from exhaust hoods and other areas that may affect the reading. Provide a shield to shade the sensor from direct sunlight.

3.1.11 Energy Meters

Locate energy meters as indicated. Connect each meter output to the DDC system, to measure both instantaneous and accumulated energy usage.

3.1.12 Damper Actuators

Where possible, mount actuators outside the air stream in accessible areas.

3.1.13 Thermometers and Gages

Mount devices to allow reading while standing on the floor or ground, as applicable.

3.1.14 Pressure Sensors

Locate pressure sensors as indicated.

3.1.15 Component Identification Labeling

Using an electronic hand-held label maker with white tape and bold black block lettering, provide an identification label on the exterior of each new control panel, control device, actuator, and sensor. Also provide labels on the exterior of each new control actuator indicating the (full) open and (full) closed positions. For labels located outdoors, use exterior grade label tape, and provide labels on both the inside and outside of the panel door or device cover. Acceptable alternatives are white plastic labels with engraved bold black block lettering permanently attached to the control panel, control device, actuator, and sensor. Have the labels and wording approved by the BAS Owner prior to installation.

3.1.16 Network and Telephone Communication Lines

When telephone lines or network connections by the Government are required, provide the Contracting Officer at least 60 days advance notice of need. Provide 1 inch conduit and Cat 5 cable from the Supervisory Building controller (SBC) to the network connection (most likely in the telephone equipment room).

3.2 INTERFACE WITH EXISTING EMCS

Interface the new DDC system with Camp Lejeune's existing EMCS. Obtain Government approval before connecting new DDC system to the EMCS. Any device connected directly to the EMCS must be approved by the Designated Approving Authority by following procedures listed in the DIACAP instruction. Complete installation and programming includes graphic creation, scheduling, alarming, lard management scheduling and trending. The server is located in Building 24: workstations are located at Buildings 1005, 1023, and 1202. Only Johnson Controls factory trained technicians, approved by the EMCS Engineer will be allowed to program the EMCS.

3.3 TEST AND BALANCE SUPPORT

The controls contractor shall coordinate with and provide on-site support to the test and balance (TAB) personnel specified under Section 23 05 93 TESTING, ADJUSTING AND BALANCING FOR HVAC. This support shall include:

a. On-site operation and manipulation of control systems during the testing and balancing.

b. Control setpoint adjustments for balancing all relevant mechanical systems, including VAV boxes.

c. Tuning control loops with setpoints and adjustments determined by TAB personnel.

3.4 CONTROLS SYSTEM OPERATORS MANUALS

Provide five electronic and three printed copies of a Controls System Operators Manual. The manual shall be specific to the project, written to actual project conditions, and provide a complete and concise depiction of the installed work. Provide information in detail to clearly explain all operation requirements for the control system.

Provide with each manual: CDs of the project's control system drawings, control programs, data bases, graphics, and all items listed below. Include gateway back-up data and configuration tools where applicable. Provide CDs in jewel case with printed and dated project-specific labels on both the CD and the case. For text and drawings, use Adobe Acrobat or MS Office file types. When approved by the Government, AutoCAD and Visio files are allowed. Give files descriptive English names and organize in folders.

Provide printed manuals in sturdy 3-ring binders with a title sheet on the outside of each binder indicating the project title, project location, contract number, and the controls contractor name, address, and telephone number. Each binder shall include a table of contents and tabbed dividers, with all material neatly organized. Manuals shall include the following:

a. A copy of the as-built control system (shop) drawings set, with all items specified under the paragraph "Submittals." Indicate all field changes and modifications.

b. A copy of the project's mechanical design drawings, including any official modifications and revisions.

c. A copy of the project's approved Product Data submittals provided under the paragraph "Submittals."

d. A copy of the project's approved Performance Verification Testing Plan and Report. Test report shall be a 48 hour trend report verifying all temperature setpoints listed in the sequence of operation. The trend report should be printed from the EMCS server. All systems (AHU's, ERV's, CHWS, HWS) should be part of this section.

e. A copy of the project's approved final TAB Report. (Added by the Mechanical Contractor (Division 23)).

f. Printouts of all control system programs, including controller setup pages if used. Include plain-English narratives of application programs, flowcharts, and source code.

g. Printouts of all physical input and output object properties, including tuning values, alarm limits, calibration factors, and set points.

h. A table entitled "AC Power Table" listing the electrical power source for each controller. Include the building electrical panel number, panel location, and circuit breaker number.

i. The DDC manufacturer's hardware and software manuals in both print and CD format with printed project-specific labels. Include installation and technical manuals for all controller hardware, operator manuals for all controllers, programming manuals for all controllers, operator manuals for all workstation software, installation and technical manuals for the workstation and notebook, and programming manuals for

the workstation and notebook software.

j. A list of qualified control system service organizations for the work provided under this contract. Include their addresses and telephone numbers.

k. A written statement entitled "Technical Support" stating the control system manufacturer or authorized representative will provide toll-free telephone technical support at no additional cost to the Government for a minimum of two years from project acceptance, will be furnished by experienced service technicians, and will be available during normal weekday working hours. Include the toll-free technical support telephone number.

l. A written statement entitled "Software Upgrades" stating software and firmware patches and updates will be provided upon request at no additional cost to the Government for a minimum of two years from contract acceptance. Include a table of all DDC system software and firmware provided under this contract, listing the original release dates, version numbers, part numbers, and serial numbers.

3.4.1 Storage Cabinets

In one project mechanical room, provide a wall-mounted metal storage cabinet with hinged doors. Provide cabinets large enough to hold the entire set of Controls System Operators Manuals, and the HVAC operation and maintenance manuals provided under Division 23 HVAC. Locate cabinets adjacent to DDC control panels where applicable. Have each cabinet's proposed installation site approved in advance by the Contracting Officer and the BAS Owner. Prominently label each cabinet with the wording "OPERATION AND MAINTENANCE MANUALS." Place one of the three hard copies of the Operators Manual in this cabinet. Prominently label each binder with the wording "MECHANICAL ROOM COPY - DO NOT REMOVE."

3.5 PERFORMANCE VERIFICATION TESTING (PVT)

3.5.1 General

The PVT shall demonstrate compliance of the control system work with the contract requirements. The PVT shall be performed by the Contractor and witnessed and approved by the Government. If the project is phased, provide separate testing for each phase. A Pre-PVT meeting to review the Pre-PVT Checklist is required to coordinate all aspects of the PVT and shall include the Contractor's QA representative, the Contractor's PVT administrator, the Contracting Officer's representative, and the EMCS Owner.

3.5.2 Performance Verification Testing Plan

Submit a detailed PVT Plan of the proposed testing for Government approval. Develop the PVT Plan specifically for the control system in this contract. The PVT Plan shall be a clear list of test items arranged in a logical sequence. Include the intended test procedure, the expected response, and the pass/fail criteria for every component tested.

The plan shall clearly describe how each item is tested, indicate where assisting personnel are required (like the mechanical contractor), and include what procedures are used to simulate conditions. Include a separate column for each checked item and extra space for comments. Where sequences of operations are checked, insert each corresponding routine from

the project’s sequence of operation. For each test area, include signature and date lines for the Contractor's PVT administrator, the Contractor's QA representative, the Contracting Officer's representative, and the EMCS Owner to acknowledge successful completion.

3.5.3 PVT Sample Size

Test all central plant equipment, primary air handling unit controllers, and fan coil unit controllers unless otherwise directed. Use the DDC system to verify all VAV boxes are controlling as specified. The Government may require testing of like controllers beyond a statistical sample if sample controllers require retesting or do not have consistent results.

The Government may witness all testing, or random samples of PVT items. When only random samples are witnessed, the Government may choose which ones.

3.5.4 Pre-Performance Verification Testing Checklist

Submit the following as a list with items checked off once verified. Provide a detailed explanation for any items that are not completed or verified.

a. Verify all required mechanical installation work is successfully completed, and all HVAC equipment is working correctly (or will be by the time the PVT is conducted).

b. Verify HVAC motors operate below full-load amperage ratings.

c. Verify all required control system components, wiring, and accessories are installed.

d. Verify the installed control system architecture matches approved drawings.

e. Verify all control circuits operate at the proper voltage and are free from grounds or faults.

f. Verify all required surge protection is installed.

g. Verify the A/C Power Table specified in "CONTROLS SYSTEM OPERATORS MANUALS" is accurate.

h. Verify all DDC network communications with the EMCS function properly, including commanding set points, and load shedding.

i. Verify air handling unit and VAV box coil performance by commanding all valves 100 percent open in both heating and cooling. Record the entering and leaving air temperatures. Record the entering water temperature. This data shall be printed, stored, and saved for future reference.

j. Verify each digital controller’s programming is backed up.

k. Verify all wiring, components, and panels are properly labeled.

l. Verify all required points are programmed into devices.

m. Verify all TAB work affecting controls is complete.

n. Verify all valve and actuator zero and span adjustments are set properly.

o. Verify all sensor readings are accurate and calibrated.

p. Verify each control valve and actuator goes to normal position upon loss of power.

q. Provide 48 hours of trend data to verify all systems are functioning as specified. Trend reports will verify control set point adjustment per the temperature re-set schedules (as required by sequence of operation).

Provide the following Trends:

(1) Air Handling Unit: discharge air temperature set point, return air temperature set point, discharge air temperature (actual), return air temperature (actual), valve command position.

(2) Energy Recovery Unit: Wheel status, wheel discharge air temperature (actual), wheel discharge air humidity (actual), unit discharge air temperature set point, unit discharge air temperature (actual).

(3) Fan Coil Unit: valve command position, room temperature set point, room temperature (actual).

r. Verify each controller works properly in stand-alone mode.

s. Verify all safety controls and devices function properly, including freeze protection and interfaces with building fire alarm systems.

t. Verify all electrical interlocks work properly.

u. Verify all workstations, notebooks and maintenance personnel interface tools are delivered, all system and database software is installed, and graphic pages are created for each device controlled by the DDC system.

v. Verify the as-built (shop) control drawings are completed.

w. Verify all required alarms are identified at the EMCS server and proper notification is setup for each alarm condition.

3.5.5 Conducting Performance Verification Testing

a. Provide trend report for each HVAC system that is part of the buildings DDC system. The trend report shall include a value for each set point listed in the sequence of operation.

b. Identify any values that do not meet the sequence of operation requirements, make repairs (re-program) and run a new trend for the system. Document each deficiency and corrective action taken.

c. If re-testing is required, follow the procedures for the initial PVT. The Government may require re-testing of any control system components affected by the original failed test.

3.5.6 Controller Capability and Labeling

Test the following for each controller:

a. Memory: Demonstrate that programmed data, parameters, and trend/ alarm history collected during normal operation is not lost during power failure.

b. Direct Connect Interface: Demonstrate the ability to connect directly to each type of digital controller with a portable electronic device like a notebook computer or PDA. Show that maintenance personnel interface tools perform as specified in the manufacturer's technical literature.

c. Stand Alone Ability: Demonstrate controllers provide stable and reliable stand-alone operation using default values or other method for values normally read over the network. Building DDC system shall function to the project's specifications if connection to the EMCS server is lost.

d. Wiring and AC Power: Demonstrate the ability to disconnect any controller safely from its power source using the AC Power Table. Demonstrate the ability to match wiring labels easily with the control drawings. Demonstrate the ability to locate a controller's location using the BACnet Communication Architecture Schematic and floor plans.

e. Nameplates and Tags: Show the nameplates and tags are accurate and permanently attached to control panel doors, devices, sensors, and actuators.

3.5.7 EMCS Server Operation

a. Show points lists agree with naming conventions.

b. Show that graphics are complete.

c. Show the UPS operates as specified.

3.5.8 BACnet Communications and Interoperability at the EMCS Server

Demonstrate proper interoperability of data sharing, alarm and event management, trending, scheduling, and device and network management. If available or required in this specification, use a BACnet protocol analyzer to assist with identifying devices, viewing network traffic, and verifying interoperability. These requirements must be met even if there is only one manufacturer of equipment installed. Testing includes the following:

a. Data Presentation: On each BACnet Operator Workstation, demonstrate graphic display capabilities.

b. Reading of Any Property: Demonstrate the ability to read and display any used readable object property of any device on the network.

c. Setpoint and Parameter Modifications: Show the ability to modify all setpoints and tuning parameters in the sequence of control or listed on project schedules. Modifications are made with BACnet messages and write services initiated by an operator using workstation graphics, or by completing a field in a menu with instructional text.

d. Peer-to-Peer Data Exchange: Show all BACnet devices are installed and configured to perform BACnet read/write services directly (without the need for operator or workstation intervention), to implement the project sequence of operation, and to share global data.

e. Alarm and Event Management: Show that alarms/events are installed and prioritized according to the BAS Owner. Demonstrate time delays and other logic is set up to avoid nuisance tripping, e.g., no status alarms during unoccupied times or high supply air during cold morning start-up. Show that operators with sufficient privilege can read and write alarm/event parameters for all standard BACnet event types. Show that operators with sufficient privilege can change routing (BACnet notification classes) for each alarm/event including the destination, priority, day of week, time of day, and the type of transition involved (TO-OFF NORMAL, TO-NORMAL, etc.).

f. Schedule Lists: Show that schedules are configured for start/stop, mode change, occupant overrides, and night setback as defined in the sequence of operations.

g. Schedule Display and Modification: Show the ability to display any schedule with start and stop times for the calendar year. Show that all calendar entries and schedules are modifiable from any connected workstation by an operator with sufficient privilege.

h. Archival Storage of Data: Show that data archiving is handled by the operator workstation/server, and local trend archiving and display is accomplished with BACnet Trend Log objects.

i. Modification of Trend Log Object Parameters: Show that an operator with sufficient privilege can change the logged data points, sampling rate, and trend duration.

j. Device and Network Management: Show the following capabilities:

(1) Display of Device Status Information

(2) Display of BACnet Object Information

(3) Silencing Devices that are Transmitting Erroneous Data

(4) Time Synchronization

(5) Remote Device Reinitialization

(6) Backup and Restore Device Programming and Master Database(s)

(7) Configuration Management of Half-Routers, Routers and BBMDs

(8) Demonstrate load shed operations if commanded by the EMCS.

3.5.9 Execution of Sequence of Operation

Demonstrate that the HVAC system operates properly through the complete sequence of operation. Use read/write property services to globally read and modify parameters over the internetwork.

3.5.10 Control Loop Stability and Accuracy

For all control loops tested, give the Government trend graphs of the control variable over time, demonstrating that the control loop responds to a 20 percent sudden change of the control variable set point without excessive overshoot and undershoot. If the process does not allow a 20 percent set point change, use the largest change possible. Show that once the new set point is reached, it is stable and maintained. Control loop trend data shall be in real-time with the time between data points 30 seconds or less.

3.5.11 Performance Verification Testing Report

Upon successful completion of the PVT, submit a PVT Report to the Government and prior to the Government taking use and possession of the facility. Do not submit the report until all problems are corrected and successfully re-tested. The report shall include the annotated PVT Plan used during the PVT. Where problems were identified, explain each problem and the corrective action taken. Include a written certification that the installation and testing of the control system is complete and meets all of the contract's requirements.

3.6 TRAINING REQUIREMENTS

Provide a qualified instructor (or instructors) with two years minimum field experience with the installation and programming of similar BACnet DDC systems. Orient training to the specific systems installed. Coordinate training times with the Contracting Officer and BAS Owner after receiving approval of the training course documentation. Training shall take place at the job site and/or a nearby Government-furnished location. A training day shall occur during normal working hours, last no longer than 8 hours and include a one-hour break for lunch and two additional 15-minute breaks. The project's approved Controls System Operators Manual shall be used as the training text. The Contractor shall ensure the manuals are submitted, approved, and available to hand out to the trainees before the start of training.

3.6.1 Training Documentation

Submit training documentation for review 30 days minimum before training. Documentation shall include an agenda for each training day, objectives, a synopses of each lesson, and the instructor's background and qualifications. The training documentation can be submitted at the same time as the project's Controls System Operators Manual.

3.6.2 Phase I Training - Fundamentals

The Phase I training session shall last one day and be conducted in a classroom environment with complete audio-visual aids provided by the contractor. Provide each trainee a printed 8.5 by 11 inch hard-copy of all visual aids used. Upon completion of the Phase I Training, each trainee should fully understand the project's DDC system fundamentals. The training session shall include the following:

a. Review of O&M Manual

    1. Network Drawing
    2. Equipment
    3. Flow Diagram

4. Sequence of Operation
5. Wiring
6. Valve Schedule
7. Damper Schedule
8. Bill of Material

b. Network

1. Communication Equipment
2. Configuration Setup of Program
3. Backup Procedures

c. Mechanical Equipment

1. Flow Diagram
2. Wiring & Terminations
3. Hardware Interlocks
4. Sequence of Operation
5. Program Decisions and Illustrations of How Program Meets the Sequence of Operation
6. Global Programming Affecting Each Piece of Equipment

d. Building Data Base

1. Alarm Management
2. Trend Management
3. Building Global Interlocks
4. System Load Shedding & Demand Limiting
5. Utility Data (Water, Steam, Solar)

e. System Tools

1. Network Equipment
2. Supervisory Controllers
3. Equipment Controllers
4. Archives

3.6.3 Phase II Training - Operation

Provide Phase II Training shortly after completing Phase I Training. The Phase II training session shall last one day and be conducted at the DDC system workstation, at a notebook computer connected to the DDC system in the field, and at other site locations as necessary. Upon completion of the Phase II Training, each trainee should fully understand the project's DDC system operation. The training session shall include the following:

a. A walk-through tour of the mechanical system and the installed DDC components (controllers, valves, dampers, surge protection, switches, thermostats, sensors, etc.)

b. Adding and removing network devices

-- End of Section --

EMCS Equipment and Points Nomenclature for Camp Lejeune

No.	Nomenclature	Description
	EQUIPMENT	
1	AHU	Air Handling Unit
2	B	Heating Water Boiler
3	B	Steam Boiler
4	C	Chiller
5	CCC	Closed Circuit Cooler
6	CCT	Closed Circuit Tower
7	COM RM	Communication Room
8	CP	Condenser Water Pump
9	CRAC	Computer Room Air Conditioner
10	CT	Cooling Tower
11	CTP	Cooling Tower Pump
12	CTRL PNL	Control Panel
13	CU	Air Cooled Condensing Unit
14	CWP	Chilled Water Supply Pump
15	DECAHP	Defense Commissary Agency HP
16	DHW	Domestic Hot Water
17	DPR	Damper
18	DTS	Dual Temperature System
19	DWP	Domestic Hot Water Pump
20	ECT	Evaporative Cooling Tower
21	EF	Exhaust Fan
22	EST	Elevated Storage Tank
23	FCU	Fan Coil Unit
24	FLTR	Filter
25	GLBT	Ground Level Booster Tank
26	HP	Heat Pump (On Ground)
27	HWP	Hot Water Pump
28	HWT	Hot Water Tank
29	HV	Heating and Ventilating Unit
30	HX	Steam to Hot Water Converter
31	LS	Lift Station
32	LP-PMP	Loop Pump
33	MAD	Mixed Air Damper
34	MAU	Make-up Air Unit
35	MZ	Multizone Unit
36	OA	Outside Air
37	OAT	Outside Air Temperature
38	PACU	Package Unit
39	PHP	Packaged Heat Pump (On Ground)
40	PX	Plate Exchanger
41	RA	Return Air
42	RAF	Return Air Fan
43	RTHP	(RTU) Packaged Rooftop Heat Pump Unit
44	RTMZ	Rooftop Multizone Unit
45	RTU	Rooftop Unit (Packaged DX)
46	RVS-VLV	Reversing Valve
47	SA	Supply Air

EMCS Equipment and Points Nomenclature for Camp Lejeune

No.	Nomenclature	Description
	EQUIPMENT	
48	STP	Secondary Treatment Plant
49	SV	Solenoid Valve/Steam Valve
50	TS	Temperature Sensor
51	TWAC	Thru-Wall Air Conditioner
52	TWHP	Thru-Wall Heat Pump
53	UH	Unit Heater
54	VAV	Variable Air Volume
55	WAC	Window Air Conditioner
56	WS	Work Station
57	WSHP	Water Source Heat Pump
58	WTP	Water Treatment Plant
59	WP	Well Pump
60	ZD	Zone Mixing Damper

EMCS Equipment and Points Nomenclature for Camp Lejeune

No.	Nomenclature	Description
	POINTS	
61	AHU-DHUM	Air Handling Unit Dehumidifier
62	AHU-OVRRD	Air Handling Unit Override
63	ALM-CMD	Alarm Command
64	ALM-HORN	Alarm Horn
65	ALM-RST	Alarm Reset
66	ALM-SIL	Alarm Silence
67	BLR-A	Boiler Alarm
68	BLR-C	Boiler Command
69	BLR-S	Boiler Start
70	BOILER-EN	Boiler Enable
71	BYPD-C	Bypass Damper Command
72	C-?	Chiller Status
73	CD-T	Cold Deck Temperature
74	CH-CMD	Chiller Command
75	CH-OVR	Chiller Override
76	CH-ALM	Chiller Alarm
77	CH-DP	Chiller Differential Pressure
78	CH-FLO-S	Chiller Flow Switch
79	CHILLER-EN	Chiller Enable
80	CHS-T	Chiller Supply Temperature
81	CHW-DP	Chilled Water Differential Pressure
82	CHW-FLOW	Chilled Water Flow
83	CHW-SYS ENABLE	Chilled Water System Enable
84	CLG-C	Cooling Command
85	CLGMAX	Cooling Maximum
86	CLG-NITE	Cooling Night Set Point
87	CLG-SP	Cooling Set Point
88	CLG-VLV	Chilled Water Valve Status
89	CLG-VLV	Chilled Water Valve Operation
90	COND1-S	Condenser 1 Status
91	COND2-S	Condenser 2 Status
92	COOL1-C	Cooling Stage 1 Command
93	COOL2-C	Cooling Stage 2 Command
94	CTFAN-C	Cooling Tower Fan Command
95	CTFAN-S	Cooling Tower Fan Status
96	CWR-T	Chilled Water Return Temperature
97	CWS-GPM	Chilled Water Supply GPM
98	CWS-T	Chilled Water Supply Temperature
99	DHW-SET	Domestic Hot Water Set Point
100	DHWS-T	Domestic Hot Water Supply Temperature
101	DHW-TANK	Domestic Hot Water Tank Temperature
102	DHW-VLV	Domestic Hot Water Steam Valve
103	ELEC-HEAT	Electric Heat
104	FLTR-DP	Filter Differential Pressure
105	FLTR-S	Air Filter Differential
106	HD-T	Hot Deck Temperature
107	HTG1-C	Heating Stage 1 Command

EMCS Equipment and Points Nomenclature for Camp Lejeune

No.	Nomenclature	Description
	POINTS	
108	HTG2-C	Heating Stage 2 Command
109	HTGMAX	Heating Maximum Set Point
110	HTG-NITE	Heating Night Set Point
111	HTG-SP	Heating Set Point
112	HTGV-CMD	Heating Command
113	HTG-VLV	Heating Valve
114	HUM-SPT	Humidity Set Point
115	HW-ENA	Hot Water Enable
116	HWP-1-C	Hot Water Pump 1 Command
117	HWP-SPT	Hot Water Pump Set Point
118	HWP-SS	Hot Water Pump Status
119	HWR-T	Hot Water Return Temperature
120	HW-SET	Hot Water Reset Set Point
121	HWS-FL	Hot Water Supply Flow
122	HWS-P	Hot Water Supply Pressure
123	HWS-SPT	Hot Water Supply Set Point
124	HWS-T	Hot Water Supply Temperature
125	HW-SYS ENABLE	Hot Water System Enable
126	HWVLV-C	Hot Water Valve Command
127	HX-VLV	Heat Exchanger Valve
128	IA-H	Indoor Humidity Sensor
129	INST-DMD	Instantaneous Demand
130	INTV-DMD	Interval Demand
131	LOOPR-T	Loop Return Temperature
132	LOOPS-T	Loop Supply Temperature
133	LPMP-1-C	Loop Pump 1 Command
134	MAD-CMD	Mixed Air Damper Command
135	MA-T	Mixed Air Temperature
136	MAX-CLG	Maximum Cooling Set Point
137	MAX-HTG	Maximum Heating Set Point
138	MIN-HTG	Minimum Heating Set Point
139	MIN-OAD	Minimum Outside Air Damper
140	OA-CFM	Outside Air Cubic Feet Per Minute
141	OAD-C	Outside Air Damper Position
142	OAD-SET	Outside Air Damper Set Point
143	OAF-C	Outside Air Fan Command
144	OAF-S	Outside Air Fan Status
145	OA-H	Outside Humidity Sensor
146	OA-RH	Outside Air Relative Humidity
147	OA-T	Outside Air Temperature
148	OCC-CLG	Occupied Cooling
149	OCC-HTG	Occupied Heating
150	OCCTIME	Occupied Time (Schedule)
151	OCCTIMER	Occupied Timer (Schedule)
152	OCLG-SP	Occupied Cooling Set Point
153	OHTG-SP]	Occupied Heating Set Point
154	OHWP-SPT	Occupied Hot Water Sump Set Point

EMCS Equipment and Points Nomenclature for Camp Lejeune

No.	Nomenclature	Description
	POINTS	
155	PH-LEV	PH Level
156	PH-SET	PH Set Point
157	PWR-FAIL	Power Fail
158	PWR-MTR	Power Meter
159	RAD-C	Return Air Damper Position
160	RAF-C	Return Air Fan Command
161	RAF-S	Return Air Fan Status
162	RA-T	Return Air Temperature
163	REV-VLV	Reversing Valve
164	RM-T	Room Temperature
165	SA-SMKD-C	Smoke Detector Command
166	SA-SMK-S	Smoke Detector Status
167	SA-SP	Supply Air Set Point
168	SA-T	Supply Air Temperature
169	SETPNT1	Set Point 1
170	SETPNT2	Set Point 2
171	SF-C	Supply Fan Command
172	SF-S	Supply Fan Status
173	SF-VFD	Supply Fan Variable Frequency Drive
174	SHDN-CMD	Shutdown Command
175	SMK-S	Duct Smoke Detector
176	STM-C	Steam Command
177	STM-S	Steam Pressure
178	STM-T	Steam Temperature
179	STM-VLV	Steam Valve Operation
180	STM-VLV	Steam Valve Status
181	SUMMER	Summer Mode
182	SUMWIN-C	Summer/Winter Command
183	TANK-L-A	Tank Level
184	TOTAL-KW	Total Kilowatt (kW)
185	TOTLFLOW	Total Flow
186	TRIPLOCK	Trip Lock Out
187	TWR-CMD	Tower Command
188	UH-ENA	Unit Heater Enable
189	UH-SPT	Unit Heater Set Point
190	UNOCC-CLG	Unoccupied Cooling
191	UNOCC-HTG	Unoccupied Heating
192	VFD-S	Variable Frequency Drive Status
193	WINDO-AC	Window Air Conditioner
194	WINTER	Winter Mode
195	WSHP-SPT	Water Source Heat Pump Set Point
196	ZNHTG-SP	Zone Heating Set Point
197	ZN-T	Space/Zone Temperature

THIS PAGE HAS BEEN INTENTIONALLY LEFT BLANK

SECTION 23 23 00

REFRIGERANT PIPING
10/07

PART 1 GENERAL

1.1 REFERENCES

The publications listed below form a part of this specification to the extent referenced. The publications are referred to within the text by the basic designation only.

AIR-CONDITIONING, HEATING AND REFRIGERATION INSTITUTE (AHRI)

AHRI 710 I-P	(2009) Performance Rating of Liquid-Line Driers
AHRI 720	(2002) Refrigerant Access Valves and Hose Connectors
ANSI/AHRI 760	(2007) Performance Rating of Solenoid Valves for Use With Volatile Refrigerants

AMERICAN SOCIETY OF HEATING, REFRIGERATING AND AIR-CONDITIONING ENGINEERS (ASHRAE)

ANSI/ASHRAE 15 & 34	(2013) ANSI/ASHRAE Standard 15-Safety Standard for Refrigeration Systems and ANSI/ASHRAE Standard 34-Designation and Safety Classification of Refrigerants

AMERICAN WELDING SOCIETY (AWS)

AWS A5.8/A5.8M	(2011; Amendment 2012) Specification for Filler Metals for Brazing and Braze Welding
AWS BRH	(2007; 5th Ed) Brazing Handbook
AWS Z49.1	(2012) Safety in Welding and Cutting and Allied Processes

ASME INTERNATIONAL (ASME)

ASME B16.22	(2013) Standard for Wrought Copper and Copper Alloy Solder Joint Pressure Fittings
ASME B16.26	(2013) Standard for Cast Copper Alloy Fittings for Flared Copper Tubes
ASME B31.1	(2012; INT 2-6, 8-10, 13, 15, 17-25, 27-31 and 42-46) Power Piping
ASME B31.5	(2013) Refrigeration Piping and Heat Transfer Components

ASTM INTERNATIONAL (ASTM)

ASTM A53/A53M	(2012) Standard Specification for Pipe, Steel, Black and Hot-Dipped, Zinc-Coated, Welded and Seamless
ASTM A653/A653M	(2015) Standard Specification for Steel Sheet, Zinc-Coated (Galvanized) or Zinc-Iron Alloy-Coated (Galvannealed) by the Hot-Dip Process
ASTM B117	(2011) Standard Practice for Operating Salt Spray (Fog) Apparatus
ASTM B280	(2013) Standard Specification for Seamless Copper Tube for Air Conditioning and Refrigeration Field Service
ASTM B32	(2008; R 2014) Standard Specification for Solder Metal
ASTM B62	(2009) Standard Specification for Composition Bronze or Ounce Metal Castings
ASTM B75/B75M	(2011) Standard Specification for Seamless Copper Tube
ASTM B813	(2010) Standard Specification for Liquid and Paste Fluxes for Soldering of Copper and Copper Alloy Tube
ASTM D520	(2000; R 2011) Zinc Dust Pigment
ASTM E84	(2015b) Standard Test Method for Surface Burning Characteristics of Building Materials

MANUFACTURERS STANDARDIZATION SOCIETY OF THE VALVE AND FITTINGS INDUSTRY (MSS)

MSS SP-58	(2009) Pipe Hangers and Supports - Materials, Design and Manufacture, Selection, Application, and Installation
MSS SP-69	(2003; Notice 2012) Pipe Hangers and Supports - Selection and Application (ANSI Approved American National Standard)

U.S. DEPARTMENT OF DEFENSE (DOD)

UFC 3-310-04	(2013) Seismic Design for Buildings

1.2 SUBMITTALS

Government approval is required for submittals with a "G" designation; submittals not having a "G" designation are for Contractor Quality Control approval. Submit the following in accordance with Section 01 33 00 SUBMITTAL PROCEDURES:

SD-02 Shop Drawings

Refrigerant Piping System; G

SD-03 Product Data

Refrigerant Piping System
Refrigerant Piping Tests; G
Demonstrations; G

SD-06 Test Reports

Refrigerant Piping Tests

SD-07 Certificates

Service Organization; G

SD-10 Operation and Maintenance Data

Maintenance
Operation and Maintenance Manuals

1.3 QUALITY ASSURANCE

1.3.1 Contract Drawings

Because of the small scale of the drawings, it is not possible to indicate all offsets, fittings, and accessories that may be required. Carefully investigate the plumbing, fire protection, electrical, structural and finish conditions that would affect the work to be performed and arrange such work accordingly, furnishing required offsets, fittings, and accessories to meet such conditions.

1.4 DELIVERY, STORAGE, AND HANDLING

Protect stored items from the weather, humidity and temperature variations, dirt and dust, or other contaminants. Proper protection and care of all material both before and during installation is the Contractor's responsibility. Replace any materials found to be damaged at the Contractor's expense. During installation, cap piping and similar openings to keep out dirt and other foreign matter.

1.5 MAINTENANCE

1.5.1 General

Submit Data Package 2 plus operation and maintenance data complying with the requirements of Section 01 78 23 OPERATION AND MAINTENANCE DATA and Section 01 78 24.00 20 FACILITY ELECTRONIC OPERATION AND MAINTENANCE SUPPORT INFORMATION (eOMSI).

PART 2 PRODUCTS

2.1 STANDARD COMMERCIAL PRODUCTS

a. Provide materials and equipment which are standard products of a manufacturer regularly engaged in the manufacturing of such products, that are of a similar material, design and workmanship and that have

been in satisfactory commercial or industrial use for 2 years prior to bid opening.

b. The 2 year use shall include applications of equipment and materials under similar circumstances and of similar size. The 2 years experience shall be satisfactorily completed by a product which has been sold or is offered for sale on the commercial market through advertisements, manufacturer's catalogs, or brochures. Products having less than a 2 year field service record will be acceptable if a certified record of satisfactory field operation, for not less than 6000 hours exclusive of the manufacturer's factory tests, can be shown.

c. Products shall be supported by a service organization. System components shall be environmentally suitable for the indicated locations. Submit a certified list of qualified permanent service organizations for support of the equipment which includes their addresses and qualifications. The service organizations shall be reasonably convenient to the equipment installation and be able to render satisfactory service to the equipment on a regular and emergency basis during the warranty period of the contract.

d. Exposed equipment moving parts, parts that produce high operating temperature, parts which may be electrically energized, and parts that may be a hazard to operating personnel shall be insulated, fully enclosed, guarded, or fitted with other types of safety devices. Install safety devices so that proper operation of equipment is not impaired. Welding and cutting safety requirements shall be in accordance with AWS Z49.1.

e. Manufacturer's standard catalog data, at least 5 weeks prior to the purchase or installation of a particular component, highlighted to show material, size, options, performance charts and curves, etc. in adequate detail to demonstrate compliance with contract requirements. Include in the data manufacturer's recommended installation instructions and procedures. Provide data for the following components as a minimum:

(1) Piping and Fittings
(2) Valves
(3) Piping Accessories
(4) Pipe Hangers, Inserts, and Supports

2.2 ELECTRICAL WORK

Manual or automatic control and protective or signal devices required for the operation specified and any control wiring required for controls and devices specified, but not shown, shall be provided.

2.3 REFRIGERANT PIPING SYSTEM

Refrigerant piping, valves, fittings, and accessories shall be in accordance with ANSI/ASHRAE 15 & 34 and ASME B31.5, except as specified herein. Refrigerant piping, valves, fittings, and accessories shall be compatible with the fluids used and capable of withstanding the pressures and temperatures of the service. Refrigerant piping, valves, and accessories used for refrigerant service shall be cleaned, dehydrated, and sealed (capped or plugged) prior to shipment from the manufacturer's plant. Submit drawings, at least 5 weeks prior to beginning construction, provided in adequate detail to demonstrate compliance with contract

requirements. Drawings shall consist of:

a. Piping layouts which identify all valves and fittings.

b. Plans and elevations which identify clearances required for maintenance and operation.

2.4 PIPE, FITTINGS AND END CONNECTIONS (JOINTS)

2.4.1 Copper Tubing

Copper tubing shall conform to ASTM B280 annealed or hard drawn as required. Copper tubing shall be soft annealed where bending is required and hard drawn where no bending is required. Soft annealed copper tubing shall not be used in sizes larger than 1-3/8 inches. Joints shall be brazed except that joints on lines 7/8 inchand smaller may be flared. Cast copper alloy fittings for flared copper tube shall conform to ASME B16.26 and ASTM B62. Wrought copper and bronze solder-joint pressure fittings shall conform to ASME B16.22 and ASTM B75/B75M. Joints and fittings for brazed joint shall be wrought-copper or forged-brass sweat fittings. Cast sweat-type joints and fittings shall not be allowed for brazed joints. Brass or bronze adapters for brazed tubing may be used for connecting tubing to flanges and to threaded ends of valves and equipment.

2.4.2 Solder

Solder shall conform to ASTM B32, grade Sb5, tin-antimony alloy for service pressures up to 150 psig. Solder flux shall be liquid or paste form, non-corrosive and conform to ASTM B813.

2.4.3 Brazing Filler Metal

Filler metal shall conform to AWS A5.8/A5.8M, Type BAg-5 with AWS Type 3 flux, except Type BCuP-5 or BCuP-6 may be used for brazing copper-to-copper joints.

2.5 VALVES

Valves shall be designed, manufactured, and tested specifically for refrigerant service. Valve bodies shall be of brass or bronze construction. Valves 1 inch and smaller shall have brazed or socket welded connections. Threaded end connections shall not be used, except in pilot pressure or gauge lines where maintenance disassembly is required and welded flanges cannot be used. Internal parts shall be removable for inspection or replacement without applying heat or breaking pipe connections. Valve stems exposed to the atmosphere shall be stainless steel or corrosion resistant metal plated carbon steel. Direction of flow shall be legibly and permanently indicated on the valve body. Control valve inlets shall be fitted with integral or adapted strainer or filter where recommended or required by the manufacturer. Purge, charge and receiver valves shall be of manufacturer's standard configuration.

2.5.1 Refrigerant Stop Valves

Valve shall be the globe or full-port ball type with a back-seating stem especially packed for refrigerant service. Valve packing shall be replaceable under line pressure. Valve shall be provided with a handwheel or wrench operator and a seal cap. Valve shall be the straight or angle pattern design as indicated.

2.5.2 Check Valves

Valve shall be the swing or lift type as required to provide positive shutoff at the differential pressure indicated. Valve shall be provide with resilient seat.

2.5.3 Liquid Solenoid Valves

Valves shall comply with ANSI/AHRI 760 and be suitable for continuous duty with applied voltages 15 percent under and 5 percent over nominal rated voltage at maximum and minimum encountered pressure and temperature service conditions. Valves shall be direct-acting or pilot-operating type, packless, except that packed stem, seal capped, manual lifting provisions shall be furnished. Solenoid coils shall be moisture-proof, UL approved, totally encapsulated or encapsulated and metal jacketed as required. Valves shall have safe working pressure of 400 psi and a maximum operating pressure differential of at least 200 psi at 85 percent rated voltage. Valves shall have an operating pressure differential suitable for the refrigerant used.

2.5.4 Refrigerant Access Valves

Refrigerant access valves and hose connections shall be in accordance with AHRI 720.

2.6 PIPING ACCESSORIES

2.6.1 Filter Driers

Driers shall conform to AHRI 710 I-P. Sizes 5/8 inch and larger shall be the reversible flow, replaceable core type. Sizes 1/2 inch and smaller shall be the sealed type. Cores shall be of suitable desiccant that will not plug, cake, dust, channel, or break down, and shall remove water, acid, and foreign material from the refrigerant. Filter driers shall be constructed so that none of the desiccant will pass into the refrigerant lines. Minimum bursting pressure shall be 1,500 psi.

2.6.2 Strainers

Strainers used in refrigerant service shall have brass or cast iron body, Y-or angle-pattern, cleanable, not less than 60-mesh noncorroding screen of an area to provide net free area not less than ten times the pipe diameter with pressure rating compatible with the refrigerant service. Screens shall be stainless steel or monel and reinforced spring-loaded where necessary for bypass-proof construction.

2.6.3 Pipe Hangers, Inserts, and Supports

Pipe hangers, inserts, guides, and supports shall conform to MSS SP-58 and MSS SP-69.

2.6.4 Escutcheons

Escutcheons shall be chromium-plated iron or chromium-plated brass, either one piece or split pattern, held in place by internal spring tension or set screws.

2.7 FABRICATION

2.7.1 Factory Coating

Unless otherwise specified, equipment and component items, when fabricated from ferrous metal, shall be factory finished with the manufacturer's standard finish, except that items located outside of buildings shall have weather resistant finishes that will withstand 3000 hours exposure to the salt spray test specified in ASTM B117 using a 5 percent sodium chloride solution. Immediately after completion of the test, the specimen shall show no signs of blistering, wrinkling, cracking, or loss of adhesion and no sign of rust creepage beyond 1/8 inch on either side of the scratch mark. Cut edges of galvanized surfaces where hot-dip galvanized sheet steel is used shall be coated with a zinc-rich coating conforming to ASTM D520, Type I.

2.7.2 Factory Applied Insulation

Refrigerant suction lines between the cooler and each compressor shall be insulated with not less than 3/4 inch thick unicellular plastic foam. Factory insulated items installed outdoors are not required to be fire-rated. As a minimum, factory insulated items installed indoors shall have a flame spread index no higher than 75 and a smoke developed index no higher than 150. Factory insulated items (no jacket) installed indoors and which are located in air plenums, in ceiling spaces, and in attic spaces shall have a flame spread index no higher than 25 and a smoke developed index no higher than 50. Flame spread and smoke developed indexes shall be determined by ASTM E84. Insulation shall be tested in the same density and installed thickness as the material to be used in the actual construction. Material supplied by a manufacturer with a jacket shall be tested as a composite material. Jackets, facings, and adhesives shall have a flame spread index no higher than 25 and a smoke developed index no higher than 50 when tested in accordance with ASTM E84.

PART 3 EXECUTION

3.1 INSTALLATION

Pipe and fitting installation shall conform to the requirements of ASME B31.1. Cut pipe accurately to measurements established at the jobsite, and work into place without springing or forcing, completely clearing all windows, doors, and other openings. Cutting or other weakening of the building structure to facilitate piping installation are not permitted without written approval. Cut pipe or tubing square, removed by reaming, and permit free expansion and contraction without causing damage to the building structure, pipe, joints, or hangers.

3.1.1 Directional Changes

Make changes in direction with fittings, except that bending of pipe 4 inches and smalleris permitted, provided a pipe bender is used and wide weep bends are formed. Mitering or notching pipe or other similar construction to form elbows or tees is not permitted. The centerline radius of bends shall not be less than 6 diameters of the pipe. Bent pipe showing kinks, wrinkles, flattening, or other malformations will not be accepted.

3.1.2 Functional Requirements

Piping shall be installed 1/2 inch/10 feet of pipe in the direction of flow to ensure adequate oil drainage. Open ends of refrigerant lines or equipment shall be properly capped or plugged during installation to keep moisture, dirt, or other foreign material out of the system. Piping shall remain capped until installation. Equipment piping shall be in accordance with the equipment manufacturer's recommendations and the contract drawings. Equipment and piping arrangements shall fit into space allotted and allow adequate acceptable clearances for installation, replacement, entry, servicing, and maintenance.

3.1.3 Fittings and End Connections

3.1.3.1 Brazed Connections

Perform brazing in accordance with AWS BRH, except as modified herein. During brazing, fill the pipe and fittings with a pressure regulated inert gas, such as nitrogen, to prevent the formation of scale. Before brazing copper joints, clean both the outside of the tube and the inside of the fitting with a wire fitting brush until the entire joint surface is bright and clean. Do not use brazing flux. Remove surplus brazing material at all joints. Make steel tubing joints in accordance with the manufacturer's recommendations. Paint joints in steel tubing with the same material as the baked-on coating within 8 hours after joints are made. Protect tubing against oxidation during brazing by continuous purging of the inside of the piping using nitrogen. Support piping prior to brazing and do not spring or force.

3.1.4 Valves

3.1.4.1 General

Refrigerant stop valves shall be installed on each side of each piece of equipment such as compressors condensers, evaporators, receivers, and other similar items in multiple-unit installation, to provide partial system isolation as required for maintenance or repair. Stop valves shall be installed with stems horizontal unless otherwise indicated. Ball valves shall be installed with stems positioned to facilitate operation and maintenance. Isolating valves for pressure gauges and switches shall be external to thermal insulation. Safety switches shall not be fitted with isolation valves. Filter dryers having access ports may be considered a point of isolation. Purge valves shall be provided at all points of systems where accumulated noncondensable gases would prevent proper system operation. Valves shall be furnished to match line size, unless otherwise indicated or approved.

3.1.4.2 Valve Identification

Each system valve, including those which are part of a factory assembly, shall be tagged. Tags shall be in alphanumeric sequence, progressing in direction of fluid flow. Tags shall be embossed, engraved, or stamped plastic or nonferrous metal of various shapes, sized approximately 1-3/8 inch diameter, or equivalent dimension, substantially attached to a component or immediately adjacent thereto.

3.1.5 Strainers

Strainers shall be provided immediately ahead of solenoid valves and

expansion devices. Strainers may be an integral part of an expansion valve.

3.1.6 Filter Dryer

A liquid line filter dryer shall be provided on each refrigerant circuit located such that all liquid refrigerant passes through a filter dryer. Dryers shall be sized in accordance with the manufacturer's recommendations for the system in which it is installed. Dryers shall be installed such that it can be isolated from the system, the isolated portion of the system evacuated, and the filter dryer replaced. Dryers shall be installed in the horizontal position except replaceable core filter dryers may be installed in the vertical position with the access flange on the bottom.

3.1.7 Pipe Hangers, Inserts, and Supports

Pipe hangers, inserts, and supports shall conform to MSS SP-58 and MSS SP-69, except as modified herein. Pipe hanger types 5, 12, and 26 shall not be used. Hangers used to support piping 2 inches and larger shall be fabricated to permit adequate adjustment after erection while still supporting the load. Piping subjected to vertical movement, when operating temperatures exceed ambient temperatures, shall be supported by variable spring hangers and supports or by constant support hangers.

3.1.7.1 Hangers

Do not use Type 3 on insulated piping. Type 24 may be used only on trapeze hanger systems or on fabricated frames.

3.1.7.2 Inserts

Secure Type 18 inserts to concrete forms before concrete is placed. Continuous inserts which allow more adjustments may be used if they otherwise meet the requirements for Type 18 inserts.

3.1.7.3 C-Clamps

Torque Type 19 and 23 C-clamps in accordance with MSS SP-69 and have both locknuts and retaining devices, furnished by the manufacturer. Field-fabricated C-clamp bodies or retaining devices are not acceptable.

3.1.7.4 Angle Attachments

Type 20 attachments used on angles and channels shall be furnished with an added malleable-iron heel plate or adapter.

3.1.7.5 Saddles and Shields

Where Type 39 saddle or Type 40 shield are permitted for a particular pipe attachment application, the Type 39 saddle, connected to the pipe, shall be used on all pipe 4 inches and larger when the temperature of the medium is 60 degrees F or higher. Type 40 shields shall be used on all piping less than 4 inches and all piping 4 inches and larger carrying medium less than 60 degrees F. A high density insulation insert of cellular glass shall be used under the Type 40 shield for piping 2 inches and larger.

3.1.7.6 Horizontal Pipe Supports

Horizontal pipe supports shall be spaced as specified in MSS SP-69 and a support shall be installed not over 1 foot from the pipe fitting joint at

each change in direction of the piping. Pipe supports shall be spaced not over 5 feet apart at valves. Pipe hanger loads suspended from steel joist with hanger loads between panel points in excess of 50 pounds shall have the excess hanger loads suspended from panel points.

3.1.7.7 Vertical Pipe Supports

Vertical pipe shall be supported at each floor, except at slab-on-grade, and at intervals of not more than 15 feet not more than 8 feet from end of risers, and at vent terminations.

3.1.7.8 Pipe Guides

Type 35 guides using, steel, reinforced polytetrafluoroethylene (PTFE) or graphite slides shall be provided where required to allow longitudinal pipe movement. Lateral restraints shall be provided as required. Slide materials shall be suitable for the system operating temperatures, atmospheric conditions, and bearing loads encountered.

3.1.7.9 High Temperature Guides with Cradles

Where there are high system temperatures and welding to piping is not desirable, then the Type 35 guide shall include a pipe cradle, welded to the guide structure and strapped securely to the pipe. The pipe shall be separated from the slide material by at least 4 inches, or by an amount adequate for the insulation, whichever is greater.

3.1.7.10 Multiple Pipe Runs

In the support of multiple pipe runs on a common base member, a clip or clamp shall be used where each pipe crosses the base support member. Spacing of the base support members shall not exceed the hanger and support spacing required for an individual pipe in the multiple pipe run.

3.1.7.11 Seismic Requirements

Piping and attached valves shall be supported and braced to resist seismic loads as specified under UFC 3-310-04 and Section 23 05 48.00 40 VIBRATION AND SEISMIC CONTROLS FOR HVAC PIPING AND EQUIPMENT. Structural steel required for reinforcement to properly support piping, headers, and equipment but not shown shall be provided under this section. Material used for support shall be as specified under Section 05 12 00 STRUCTURAL STEEL.3.1.7.12 Structural Attachments

Attachment to building structure concrete and masonry shall be by cast-in concrete inserts, built-in anchors, or masonry anchor devices. Inserts and anchors shall be applied with a safety factor not less than 5. Supports shall not be attached to metal decking. Masonry anchors for overhead applications shall be constructed of ferrous materials only. Structural steel brackets required to support piping, headers, and equipment, but not shown, shall be provided under this section. Material used for support shall be as specified under Section 05 12 00 STRUCTURAL STEEL.

3.1.8 Pipe Alignment Guides

Pipe alignment guides shall be provided where indicated for expansion loops, offsets, and bends and as recommended by the manufacturer for expansion joints, not to exceed 5 feet on each side of each expansion joint, and in lines 4 inches or smaller not more than 2 feet on each side

of the joint.

3.1.9 Pipe Anchors

Anchors shall be provided wherever necessary or indicated to localize expansion or to prevent undue strain on piping. Anchors shall consist of heavy steel collars with lugs and bolts for clamping and attaching anchor braces, unless otherwise indicated. Anchor braces shall be installed in the most effective manner to secure the desired results using turnbuckles where required. Supports, anchors, or stays shall not be attached where they will injure the structure or adjacent construction during installation or by the weight of expansion of the pipeline. Where pipe and conduit penetrations of vapor barrier sealed surfaces occur, these items shall be anchored immediately adjacent to each penetrated surface, to provide essentially zero movement within penetration seal. Detailed drawings of pipe anchors shall be submitted for approval before installation.

3.1.10 Building Surface Penetrations

Sleeves shall not be installed in structural members except where indicated or approved. Sleeves in nonload bearing surfaces shall be galvanized sheet metal, conforming to ASTM A653/A653M, Coating Class G-90, 20 gauge. Sleeves in load bearing surfaces shall be uncoated carbon steel pipe, conforming to ASTM A53/A53M, Standard weight. Sealants shall be applied to moisture and oil-free surfaces and elastomers to not less than 1/2 inch depth. Sleeves shall not be installed in structural members.

3.1.10.1 General Service Areas

Each sleeve shall extend through its respective wall, floor, or roof, and shall be cut flush with each surface. Pipes passing through concrete or masonry wall or concrete floors or roofs shall be provided with pipe sleeves fitted into place at the time of construction. Sleeves shall be of such size as to provide a minimum of 1/4 inch all-around clearance between bare pipe and sleeves or between jacketed-insulation and sleeves. Except in pipe chases or interior walls, the annular space between pipe and sleeve or between jacket over-insulation and sleeve shall be sealed in accordance with Section 07 92 00 JOINT SEALANTS.

3.1.10.2 Waterproof Penetrations

Pipes passing through roof or floor waterproofing membrane shall be installed through a 17 ounce copper sleeve, or a 0.032 inch thick aluminum sleeve, each within an integral skirt or flange. Flashing sleeve shall be suitably formed, and skirt or flange shall extend not less than 8 inches from the pipe and be set over the roof or floor membrane in a troweled coating of bituminous cement. The flashing sleeve shall extend up the pipe a minimum of 2 inches above the roof or floor penetration. The annular space between the flashing sleeve and the bare pipe or between the flashing sleeve and the metal-jacket-covered insulation shall be sealed as indicated. Penetrations shall be sealed by either one of the following methods.

3.1.10.2.1 Waterproofing Clamping Flange

Pipes up to and including 10 inches in diameter passing through roof or floor waterproofing membrane may be installed through a cast iron sleeve with caulking recess, anchor lugs, flashing clamp device, and pressure ring with brass bolts. Waterproofing membrane shall be clamped into place and

sealant shall be placed in the caulking recess.

3.1.10.2.2 Modular Mechanical Type Sealing Assembly

In lieu of a waterproofing clamping flange and caulking and sealing of annular space between pipe and sleeve or conduit and sleeve, a modular mechanical type sealing assembly may be installed. Seals shall consist of interlocking synthetic rubber links shaped to continuously fill the annular space between the pipe/conduit and sleeve with corrosion protected carbon steel bolts, nuts, and pressure plates. Links shall be loosely assembled with bolts to form a continuous rubber belt around the pipe with a pressure plate under each bolt head and each nut. After the seal assembly is properly positioned in the sleeve, tightening of the bolt shall cause the rubber sealing elements to expand and provide a watertight seal rubber sealing elements to expand and provide a watertight seal between the pipe/conduit seal between the pipe/conduit and the sleeve. Each seal assembly shall be sized as recommended by the manufacturer to fit the pipe/conduit and sleeve involved. The Contractor electing to use the modular mechanical type seals shall provide sleeves of the proper diameters.

3.1.10.3 Fire-Rated Penetrations

Penetration of fire-rated walls, partitions, and floors shall be sealed as specified in Section 07 84 00 FIRESTOPPING.

3.1.10.4 Escutcheons

Finished surfaces where exposed piping, bare or insulated, pass through floors, walls, or ceilings, except in boiler, utility, or equipment rooms, shall be provided with escutcheons. Where sleeves project slightly from floors, special deep-type escutcheons shall be used. Escutcheon shall be secured to pipe or pipe covering.

3.1.11 Access Panels

Access panels shall be provided for all concealed valves, vents, controls, and items requiring inspection or maintenance. Access panels shall be of sufficient size and located so that the concealed items may be serviced and maintained or completely removed and replaced. Access panels shall be as specified in Section 05 50 13 MISCELLANEOUS METAL FABRICATIONS.

3.1.12 Field Applied Insulation

Field installed insulation shall be as specified in Section 23 07 00 THERMAL INSULATION FOR MECHANICAL SYSTEMS, except as defined differently herein.

3.1.13 Field Painting

Painting required for surfaces not otherwise specified, and finish painting of items only primed at the factory are specified in Section 09 90 00 PAINTS AND COATINGS.

3.1.13.1 Color Coding

Color coding for piping identification is specified in Section 09 90 00 PAINTS AND COATINGS.

3.1.14 Identification Tags

Provide identification tags made of brass, engraved laminated plastic or engraved anodized aluminum indicating service and item number on all valves and dampers. Tags shall be 1-3/8 inch minimum diameter and marking shall be stamped or engraved. Indentations shall be black for reading clarity. Tags shall be attached to valves with No. 12 AWG copper wire, chrome-plated beaded chain or plastic straps designed for that purpose.

3.2 CLEANING AND ADJUSTING

Clean uncontaminated system(s) by evacuation and purging procedures currently recommended by refrigerant and refrigerant equipment manufacturers, and as specified herein, to remove small amounts of air and moisture. Systems containing moderate amounts of air, moisture, contaminated refrigerant, or any foreign matter shall be considered contaminated systems. Restoring contaminated systems to clean condition including disassembly, component replacement, evacuation, flushing, purging, and re-charging, shall be performed using currently approved refrigerant and refrigeration manufacturer's procedures. Restoring contaminated systems shall be at no additional cost to the Government as determined by the Contracting Officer. Water shall not be used in any procedure or test.

3.3 TRAINING COURSE

a. Submit a schedule, at least 2 weeks prior to the date of the proposed training course, which identifies the date, time, and location for the training. Conduct a training course for 4 members of the operating staff as designated by the Contracting Officer. The training period shall consist of a total 2 hours of normal working time and start after the system is functionally completed but prior to final acceptance tests.

b. The field posted instructions shall cover all of the items contained in the approved operation and maintenance manuals as well as demonstrations of routine maintenance operations.

c. Submit 6 complete copies of an operation manual in bound 8 1/2 by 11 inch booklets listing step-by-step procedures required for system startup, operation, abnormal shutdown, emergency shutdown, and normal shutdown at least 4 weeks prior to the first training course. The booklets shall include the manufacturer's name, model number, and parts list. The manuals shall include the manufacturer's name, model number, service manual, and a brief description of all equipment and their basic operating features. Submit in accordance with Section 01 78 23 Operation and Maintenance Data and 01 78 24.00 20 Facility Electronic Operation and Maintenance Support Information (eOMSI).

d. Submit 6 complete copies of maintenance manual in bound 8 1/2 x 11 inch booklets listing routine maintenance procedures, possible breakdowns and repairs, and a trouble shooting guide. The manuals shall include piping layouts and simplified wiring and control diagrams of the system as installed.

3.4 REFRIGERANT PIPING TESTS

After all components of the refrigerant system have been installed and

connected, subject the entire refrigeration system to pneumatic, evacuation, and startup tests as described herein. Submit a schedule, at least 2 weeks prior to the start of related testing, for each test. Identify the proposed date, time, and location for each test. Conduct tests in the presence of the Contracting Officer. Water and electricity required for the tests will be furnished by the Government. Provide all material, equipment, instruments, and personnel required for the test. Provide the services of a qualified technician, as required, to perform all tests and procedures indicated herein. Field tests shall be coordinated with Section 23 05 93 TESTING, ADJUSTING, AND BALANCING OF HVAC SYSTEMS. Submit 6 copies of the tests report in bound 8 1/2 by 11 inch booklets documenting all phases of the tests performed. The report shall include initial test summaries, all repairs/adjustments made, and the final test results.

3.4.1 Preliminary Procedures

Prior to pneumatic testing, equipment which has been factory tested and refrigerant charged as well as equipment which could be damaged or cause personnel injury by imposed test pressure, positive or negative, shall be isolated from the test pressure or removed from the system. Safety relief valves and rupture discs, where not part of factory sealed systems, shall be removed and openings capped or plugged.

3.4.2 Pneumatic Test

Pressure control and excess pressure protection shall be provided at the source of test pressure. Valves shall be wide open, except those leading to the atmosphere. Test gas shall be dry nitrogen, with minus 70 degree F dewpoint and less than 5 ppm oil. Test pressure shall be applied in two stages before any refrigerant pipe is insulated or covered. First stage test shall be at 10 psi with every joint being tested with a thick soap or color indicating solution. Second stage tests shall raise the system to the minimum refrigerant leakage test pressure specified in ANSI/ASHRAE 15 & 34 with a maximum test pressure 25 percent greater. Pressure above 100 psig shall be raised in 10 percent increments with a pressure acclimatizing period between increments. The initial test pressure shall be recorded along with the ambient temperature to which the system is exposed. Final test pressures of the second stage shall be maintained on the system for a minimum of 24 hours. At the end of the 24 hour period, the system pressure will be recorded along with the ambient temperature to which the system is exposed. A correction factor of 0.3 psi will be allowed for each degree F change between test space initial and final ambient temperature, plus for increase and minus for a decrease. If the corrected system pressure is not exactly equal to the initial system test pressure, then the system shall be investigated for leaking joints. To repair leaks, the joint shall be taken apart, thoroughly cleaned, and reconstructed as a new joint. Joints repaired by caulking, remelting, or back-welding/brazing shall not be acceptable. Following repair, the entire system shall be retested using the pneumatic tests described above. The entire system shall be reassembled once the pneumatic tests are satisfactorily completed.

3.4.3 Evacuation Test

Following satisfactory completion of the pneumatic tests, the pressure shall be relieved and the entire system shall be evacuated to an absolute pressure of 300 micrometers. During evacuation of the system, the ambient temperature shall be higher than 35 degrees F. No more than one system

shall be evacuated at one time by one vacuum pump. Once the desired vacuum has been reached, the vacuum line shall be closed and the system shall stand for 1 hour. If the pressure rises over 500 micrometers after the 1 hour period, then the system shall be evacuated again down to 300 micrometers and let set for another 1 hour period. The system shall not be charged until a vacuum of at least 500 micrometers is maintained for a period of 1 hour without the assistance of a vacuum line. If during the testing the pressure continues to rise, check the system for leaks, repair as required, and repeat the evacuation procedure. During evacuation, pressures shall be recorded by a thermocouple-type, electronic-type, or a calibrated-micrometer type gauge.

3.4.4 System Charging and Startup Test

Following satisfactory completion of the evacuation tests, the system shall be charged with the required amount of refrigerant by raising pressure to normal operating pressure and in accordance with manufacturer's procedures. Following charging, the system shall operate with high-side and low-side pressures and corresponding refrigerant temperatures, at design or improved values. The entire system shall be tested for leaks. Fluorocarbon systems shall be tested with halide torch or electronic leak detectors.

3.4.5 Refrigerant Leakage

If a refrigerant leak is discovered after the system has been charged, the leaking portion of the system shall immediately be isolated from the remainder of the system and the refrigerant pumped into the system receiver or other suitable container. Under no circumstances shall the refrigerant be discharged into the atmosphere.

3.4.6 Contractor's Responsibility

At all times during the installation and testing of the refrigeration system, take steps to prevent the release of refrigerants into the atmosphere. The steps shall include, but not be limited to, procedures which will minimize the release of refrigerants to the atmosphere and the use of refrigerant recovery devices to remove refrigerant from the system and store the refrigerant for reuse or reclaim. At no time shall more than 3 ounces of refrigerant be released to the atmosphere in any one occurrence. Any system leaks within the first year shall be repaired in accordance with the requirements herein at no cost to the Government including material, labor, and refrigerant if the leak is the result of defective equipment, material, or installation.

-- End of Section --

THIS PAGE HAS BEEN INTENTIONALLY LEFT BLANK

SECTION 23 81 00.00 20

UNITARY AIR CONDITIONING EQUIPMENT
11/09

PART 1 GENERAL

1.1 REFERENCES

The publications listed below form a part of this specification to the extent referenced. The publications are referred to within the text by the basic designation only.

AIR-CONDITIONING, HEATING AND REFRIGERATION INSTITUTE (AHRI)

AHRI DCUP	(Online) Directory of Certified Unitary Products

AMERICAN SOCIETY OF HEATING, REFRIGERATING AND AIR-CONDITIONING ENGINEERS (ASHRAE)

ANSI/ASHRAE 15 & 34	(2013) ANSI/ASHRAE Standard 15-Safety Standard for Refrigeration Systems and ANSI/ASHRAE Standard 34-Designation and Safety Classification of Refrigerants
ASHRAE 52.2	(2012; Errata 2013) Method of Testing General Ventilation Air-Cleaning Devices for Removal Efficiency by Particle Size
ASHRAE 55	(2010; Errata 2011; Addenda A 2011; Addenda B, C, D, E and F 2012; Errata 2012; Addenda G, H, I, J, K, L, M, N, O, P, Q and R) Thermal Environmental Conditions for Human Occupancy
ASHRAE 62.1	(2010; Errata 2011; INT 3 2012; INT 4 2012; INT 5 2013) Ventilation for Acceptable Indoor Air Quality
ASHRAE 90.1 - IP	(2010; Errata 1-4 2011; INT 1-12 2011; Addenda A, B, C, G, H, J, K, O, P, S, Y, Z, BZ, CG, CI and DS 2012; Errata 5-9 2012; INT 13-16 2012; Errata 10-12 2013; INT 17-18 2013) Energy Standard for Buildings Except Low-Rise Residential Buildings

AMERICAN WELDING SOCIETY (AWS)

AWS A5.8/A5.8M	(2011; Amendment 2012) Specification for Filler Metals for Brazing and Braze Welding

ASME INTERNATIONAL (ASME)

ASME B16.22	(2013) Standard for Wrought Copper and Copper Alloy Solder Joint Pressure Fittings

ASME B31.5	(2013) Refrigeration Piping and Heat Transfer Components

ASTM INTERNATIONAL (ASTM)

ASTM A123/A123M	(2013) Standard Specification for Zinc (Hot-Dip Galvanized) Coatings on Iron and Steel Products
ASTM B117	(2011) Standard Practice for Operating Salt Spray (Fog) Apparatus
ASTM B280	(2013) Standard Specification for Seamless Copper Tube for Air Conditioning and Refrigeration Field Service
ASTM B88	(2009) Standard Specification for Seamless Copper Water Tube
ASTM C534/C534M	(2013) Standard Specification for Preformed Flexible Elastomeric Cellular Thermal Insulation in Sheet and Tubular Form
ASTM D1654	(2008) Evaluation of Painted or Coated Specimens Subjected to Corrosive Environments

MANUFACTURERS STANDARDIZATION SOCIETY OF THE VALVE AND FITTINGS INDUSTRY (MSS)

MSS SP-58	(2009) Pipe Hangers and Supports - Materials, Design and Manufacture, Selection, Application, and Installation
MSS SP-69	(2003; Notice 2012) Pipe Hangers and Supports - Selection and Application (ANSI Approved American National Standard)

NATIONAL ELECTRICAL MANUFACTURERS ASSOCIATION (NEMA)

NEMA ICS 1	(2000; R 2008; E 2010) Standard for Industrial Control and Systems: General Requirements
NEMA ICS 2	(2000; R 2005; Errata 2008) Standard for Controllers, Contactors, and Overload Relays Rated 600 V
NEMA ICS 6	(1993; R 2011) Enclosures
NEMA MG 1	(2011; Errata 2012) Motors and Generators

U.S. ENVIRONMENTAL PROTECTION AGENCY (EPA)

Energy Star	(1992; R 2006) Energy Star Energy Efficiency Labeling System (FEMP)

U.S. GENERAL SERVICES ADMINISTRATION (GSA)

CID A-A-50502	(Basic) Air Conditioners, (Unitary Heat Pump), Air to Air (3,000 to 300,000 BTU)

U.S. GREEN BUILDING COUNCIL (USGBC)

LEED NC	(2009) Leadership in Energy and Environmental Design(tm) New Construction Rating System

UNDERWRITERS LABORATORIES (UL)

UL 109	(1997; Reprint Aug 2013) Tube Fittings for Flammable and Combustible Fluids, Refrigeration Service, and Marine Use
UL 873	(2007; Reprint Aug 2013) Standard for Temperature-Indicating and -Regulating Equipment
UL 900	(2004; Reprint Feb 2012) Standard for Air Filter Units

1.2 RELATED REQUIREMENTS

Section 23 03 00.00 20 BASIC MECHANICAL MATERIALS AND METHODS, applies to this section with the additions and modifications specified herein.

1.3 SUBMITTALS

Government approval is required for submittals with a "G" designation; submittals not having a "G" designation are for Contractor Quality Control approval. The following shall be submitted in accordance with Section 01 33 00 SUBMITTAL PROCEDURES:

SD-02 Shop Drawings

Field-assembled refrigerant pipingControl system wiring diagrams

SD-03 Product Data

Air conditioners

Submit documentation for Energy Star qualifications or meeting FEMP requirements. Indicate Energy Efficiency Rating.

Filters; (LEED NC)

Submit documentation indicating type of biobased material in product and biobased content. Indicate relative dollar value of biobased content products to total dollar value of products included in project. Submit documentation indicating relative dollar value of rapidly renewable materials to total dollar value of products included in project.

Thermostats

Refrigerant piping and accessoriesCoatings for finned tube coils

For packaged terminal units, include indoor noise rating.

SD-06 Test Reports

Salt-spray tests

Start-up and initial operational tests

SD-08 Manufacturer's Instructions

Air conditioners

Filters

Thermostats

Refrigerant piping and accessoriesSD-10 Operation and Maintenance Data

Air conditioners, Data Package 3

Filters, Data Package 2

Thermostats, Data Package 2

Submit in accordance with Section 01 78 23 OPERATION AND MAINTENANCE DATA and
Section 01 78 24.00 20 FACILITY ELECTRONIC OPERATION AND MAINTENANCE SUPPORT
INFORMATION (eOMSI).

SD-11 Closeout Submittals

Posted operating instructions

1.4 QUALITY ASSURANCE

1.4.1 Modification of References

Accomplish work in accordance with the referenced publications, except as modified by this section. Consider the advisory or recommended provisions to be mandatory, as though the word "shall" had been substituted for the words "should" or "could" or "may," wherever they appear. Interpret reference to "the Authority having jurisdiction," "the Administrative Authority," "the Owner," or "the Design Engineer" to mean the Contracting Officer.

1.4.2 Detail Drawing

For refrigerant piping, submit piping, including pipe sizes. Submit control system wiring diagrams.

1.4.3 Safety

Design, manufacture, and installation of unitary air conditioning equipment shall conform to ANSI/ASHRAE 15 & 34.

1.4.4 Posted Operating Instructions

Submit posted operating instructions for each packaged air conditioning unit.

1.4.5 Sizing

Size equipment based on Design Manual CS from the Air Conditioning Contractors of America; do not oversize.

1.5 REFRIGERANTS

Refrigerants shall have an Ozone Depletion Factor (ODF) of 0.04 or less. The ODF shall be in accordance with the "Montreal Protocol On Substances That Deplete The Ozone Layer," September 1987, sponsored by the United Nations Environment Programme. CFCs shall not be permitted. Refrigerant shall be an approved alternative refrigerant per EPA's Significant New Alternative Policy (SNAP) listing.

1.6 ENVIRONMENTAL REQUIREMENTS

For proper Indoor Environmental Quality, maintain positive pressure within the building. Ventilation shall meet or exceed ASHRAE 62.1 and all published addenda. Meet or exceed filter media efficiency as tested in accordance with ASHRAE 52.2. Thermal comfort shall meet or exceed ASHRAE 55.

PART 2 PRODUCTS

2.1 AIR CONDITIONERS

2.1.1 Split-System Type

Provide separate assemblies designed to be used together. Base ratings on the use of matched assemblies. Provide performance diagrams for units with capacities not certified by AHRI to verify that components of the air conditioning system furnished will satisfy the capacity requirement specified or indicated. Minimum energy efficiency shall be in accordance with ASHRAE 90.1 - IP, at a minimum. List units with capacities smaller than 135,000 Btu/hr in the AHRI DCUP; in lieu of listing in the AHRI Directory, a letter of certification from AHRI that units have been certified and will be listed in the next Directory will be acceptable. Provide capacity, electrical characteristics and operating conditions as indicated.

2.1.2 Single Zone Units

Provide single zone type units arranged to draw or blow through coil sections.

2.1.3 Compressors

Units with cylinder unloading shall start with capacity reduction devices in the unloaded position. Units with multiple compressors shall have means to sequence starting of compressors. Provide compressors with devices to prevent short cycling when shut down by safety controls. Device shall delay operation of compressor motor for at least 3 minutes but not more than 6 minutes.

2.1.4 Coils

On coils with all-aluminum construction, provide tubes of aluminum alloy 1100, 1200, or 3102; provide fins of aluminum alloy 7072; and provide tube sheets of aluminum alloy 7072 or 5052. Provide a separate air cooled condenser circuit for each compressor or parallel compressor installation. Provide a coating on condenser coils and fins as specified in the paragraph entitled "Coatings for Finned Tube Coils." Coils to be coated shall be part of manufacturer's standard product for capacities and ratings indicated and specified. Provide plate type fins.

2.1.5 Condenser Controls

Provide start-up and head pressure controls to allow for system operation at ambient temperatures down to 0 degrees F.

2.1.6 Fans

Provide belt-driven evaporator fans with adjustable pitch pulleys; except for units less than 5 ton capacity, direct drive with at least two speed taps may be used. Select pulleys at approximately midpoint of the adjustable range.

2.1.7 Filters

Provide filters of the type specified in this section.

2.1.8 Thermostats

Provide adjustable type that conforms to applicable requirements of UL 873. Provide cooling type with contacts hermetically sealed against moisture, corrosion, lint, dust, and foreign material. Design to operate on not more than 1.5 degrees Fdifferential and of suitable range calibrated in degrees F. Provide fixed cooling anticipation. Provide system selector switches to provide "COOL" and "OFF" and fan selector switches to provide "AUTOMATIC" and "ON." Provide relays, contactors, and transformers located in a panel or panels for replacement and service.

2.1.8.1 Cooling

a. When thermostat is in "COOL" position with fan selector switch in "AUTO" position, compressor, evaporator fan, and condenser fan shall cycle together.

b. When thermostat is in "COOL" position with fan selector switch in "ON" position, compressor, and condenser fan shall cycle together and evaporator fan shall run continuously.

2.1.8.2 Supply Air Fan

a. When fan selector switch is in "AUTO" position with thermostat in "OFF" position, fan shall not run.

b. When fan selector switch is in "ON" position, fan shall run continuously.

2.2 FILTERS

Provide filters to filter return air and locate inside air conditioners .

Provide replaceable reusabletype. Filters shall conform to UL 900, Class 1 or Class 2. Polyurethane filters shall not be used on units with multiframe filters.

2.2.1 Cleanable Type Filters

Provide sufficient oil to coat filters six times based on one pint of oil per each 10 square feet of filter area. Provide washing and charging tanks for cleaning and coating filters. Filters shall have a MERV of 8 when tested in accordance with ASHRAE 52.2.

2.3 COATINGS FOR FINNED TUBE COILS

Provide corrosion protection for all exterior HVAC equipment, including air handling units, heat exchanger coil surfaces, equipment casings, air cooled condensing units, air conditioning units that are exposed to the weather.Corrosion protection shall meet or exceed the requirements of a 3000 hoursalt spray test in accordance with ASTM B117. The specified capacities onthe plans and specifications shall be the capacities after the requiredcorrosion protection coatings are applied. This corrosion protection isrequired on HVAC equipment within buildings that are subject to the outsideweather conditions. Specifically, equipment requiring protection isdefined as the first HVAC equipment (excluding louvers) met by the outsideair in the supply air ductwork system. Provide manufacturer;s standardoff-the-shelf anti-corrosion options for "coastal" or "sea coast"installations that meet or exceed the4 requirements stated above..

2.3.1 Phenolic Coating

Provide a resin base thermosetting phenolic coating. Apply coating by immersion dipping of the entire coil. Provide a minimum of two coats. Bake or heat dry coils following immersions. After final immersion and prior to final baking, spray entire coil with particular emphasis given to building up coating on sheared edges. Total dry film thickness shall be 2.5 to 3.0 mils.

2.4 MOTORS AND STARTERS

NEMA MG 1, NEMA ICS 1, and NEMA ICS 2. Variable speed. Motors less than 1 hp shall meet NEMA High Efficiency requirements. Motors 1 hp and larger shall meet NEMA Premium Efficiency requirements. Determine specific motor characteristics to ensure provision of correctly sized starters and overload heaters. Provide motors to operate at full capacity with a voltage variation of plus or minus 10 percent of the motor voltage rating. Motor size shall be sufficient for the duty to be performed and shall not exceed its full load nameplate current rating when driven equipment is operated at specified capacity under the most severe conditions likely to be encountered. When motor size provided differs from size indicated or specified, the Contractor shall make the necessary adjustments to the wiring, disconnect devices, and branch circuit protection to accommodate equipment actually provided. Provide general-purpose type starter enclosures in accordance with NEMA ICS 6.

2.5 REFRIGERANT PIPING AND ACCESSORIES

Provide accessories as specified in CID A-A-50502 and this section. Provide suction line accumulators as recommended by equipment manufacturer's installation instructions.

2.5.1 Factory Charged Tubing

Provide extra soft, deoxidized, bright annealed copper tubing conforming to ASTM B280, factory dehydrated and furnished with a balanced charge of refrigerant recommended by manufacturer of equipment being connected. Factory insulate suction line tubing with 3/8 inchminimum thickness of closed cell, foamed plastic conforming to ASTM C534/C534M with a permeance rating not to exceed 1.0. Provide quick-connectors with caps or plugs to protect couplings. Include couplings for suction and liquid line connections of the indoor and outdoor sections.

2.5.2 Field-Assembled Refrigerant Piping

Material and dimensional requirements for field-assembled refrigerant piping, valves, fittings, and accessories shall conform to ANSI/ASHRAE 15 & 34 and ASME B31.5, except as herein specified. Factory clean, dehydrate, and seal piping before delivery to the project location. Provide seamless copper tubing, hard drawn, Type K or L, conforming to ASTM B88, except that tubing with outside diameters of 1/4 inch and 3/8 inch shall have nominal wall thickness of not less than 0.030 inch and 0.032 inch, respectively. Soft annealed copper tubing conforming to ASTM B280 may be used where flare connections to equipment are required only in nominal sizes less than one inch outside diameter.

2.5.3 Fittings

ASME B16.22 for solder-joint fittings. UL 109 for flared tube fittings.

2.5.4 Brazing Filler Material

AWS A5.8/A5.8M.

2.5.5 Pipe Hangers and Supports

MSS SP-69 and MSS SP-58, Type , except as indicated otherwise.

2.5.6 Pipe Sleeves

Provide sleeves where piping passes through walls, floors, roofs, and partitions. Secure sleeves in proper position and location during construction. Provide sleeves of sufficient length to pass through entire thickness of walls, floors, roofs, and partitions. Provide not less than 0.25 inch space between exterior of piping or pipe insulation and interior of sleeve. Firmly pack space with insulation and caulk at both ends of the sleeve with plastic waterproof cement which will dry to a firm but pliable mass, or provide a segmented elastomeric seal.

2.5.6.1 Sleeves in Masonry and Concrete Walls, Floors, and Roofs

Provide Schedule 40 or Standard Weight zinc-coated steel pipe sleeves. Extend sleeves in floor slabs 3 inches above finished floor.

2.5.6.2 Sleeves in Partitions and Non-Masonry Structures

Provide zinc-coated steel sheet sleeves having a nominal weight of not less than 0.90 pound per square foot, in partitions and other than masonry and concrete walls, floors, and roofs.

2.6 FINISHES

Provide steel surfaces of equipment including packaged terminal units, heat pumps, and air conditioners, that do not have a zinc coating conforming to ASTM A123/A123M , or a duplex coating of zinc and paint, with a factory applied coating or paint system. Provide a coating or paint system on actual equipment identical to that on salt-spray test specimens with respect to materials, conditions of application, and dry-film thickness.

2.7 SOURCE QUALITY CONTROL

2.7.1 Salt-Spray Tests

Salt-spray test the factory-applied coating or paint system of equipment including packaged terminal units, heat pumps, and air conditioners in accordance with ASTM B117. Conduct test for 3000 hours for equipment installed outdoors, or 125 hours for equipment installed indoors. Test specimens shall have a standard scribe mark as defined in ASTM D1654. Upon completion of exposure, evaluate and rate the coating or paint system in accordance with procedures A and B of ASTM D1654. Rating of failure at the scribe mark shall not be less than six, average creepage not greater than 1/8 inch. Rating of the unscribed area shall not be less than 10, no failure.

PART 3 EXECUTION

3.1 EQUIPMENT INSTALLATION

Install equipment and components in a manner to ensure proper and sequential operation of equipment and equipment controls. Install equipment not covered in this section, or in manufacturer's instructions, as recommended by manufacturer's representative. Provide proper foundations for mounting of equipment, accessories, appurtenances, piping and controls including, but not limited to, supports, vibration isolators, stands, guides, anchors, clamps and brackets. Foundations for equipment shall conform to equipment manufacturer's recommendation, unless otherwise indicated. Set anchor bolts and sleeves using templates. Provide anchor bolts of adequate length, and provide with welded-on plates on the head end embedded in the concrete. Level equipment bases, using jacks or steel wedges, and neatly grout-in with a nonshrinking type of grouting mortar. Locate equipment to allow working space for servicing including shaft removal, disassembling compressor cylinders and pistons, replacing or adjusting drives, motors, or shaft seals, access to water heads and valves of shell and tube equipment, tube cleaning or replacement, access to automatic controls, refrigerant charging, lubrication, oil draining and working clearance under overhead lines. Provide electric isolation between dissimilar metals for the purpose of minimizing galvanic corrosion.

3.1.1 Unitary Air Conditioning System

Install as indicated, in accordance with requirements of ANSI/ASHRAE 15 & 34, and the manufacturer's installation and operational instructions.

3.2 PIPING

Brazing, bending, forming and assembly of refrigerant piping shall conform to ASME B31.5.

3.2.1 Pipe Hangers and Supports

Design and fabrication of pipe hangers, supports, and welding attachments shall conform to MSS SP-58. Installation of hanger types and supports for bare and covered pipes shall conform to MSS SP-69 for the system temperature range. Unless otherwise indicated, horizontal and vertical piping attachments shall conform to MSS SP-58.

3.2.2 Refrigerant Piping

Cut pipe to measurements established at the site and work into place without springing or forcing. Install piping with sufficient flexibility to provide for expansion and contraction due to temperature fluctuation. Where pipe passes through building structure pipe joints shall not be concealed, but shall be located where they may be readily inspected. Install piping to be insulated with sufficient clearance to permit application of insulation. Install piping as indicated and detailed, to avoid interference with other piping, conduit, or equipment. Except where specifically indicated otherwise, run piping plumb and straight and parallel to walls and ceilings. Trapping of lines will not be permitted except where indicated. Provide sleeves of suitable size for lines passing through building structure. Braze refrigerant piping with silver solder complying with AWS A5.8/A5.8M. Inside of tubing and fittings shall be free of flux. Clean parts to be jointed with emery cloth and keep hot until solder has penetrated full depth of fitting and extra flux has been expelled. Cool joints in air and remove flame marks and traces of flux. During brazing operation, prevent oxide film from forming on inside of tubing by slowly flowing dry nitrogen through tubing to expel air. Make provisions to automatically return oil on halocarbon systems. Installation of piping shall comply with ASME B31.5.

3.2.3 Returning Oil From Refrigerant System

Install refrigerant lines so that gas velocity in the evaporator suction line is sufficient to move oil along with gas to the compressor. Where equipment location requires vertical risers, line shall be sized to maintain sufficient velocity to lift oil at minimum system loading and corresponding reduction of gas volume. Install a double riser when excess velocity and pressure drop would result from full system loading. Larger riser shall have a trap, of minimum volume, obtained by use of 90- and 45-degree ells. Arrange small riser with inlet close to bottom of horizontal line, and connect to top of upper horizontal line. Do not install valves in risers.

3.2.4 Refrigerant Driers, Sight Glass Indicators, and Strainers

Provide refrigerant driers, sight glass liquid indicators, and strainers in refrigerant piping in accordance with CID A-A-50502 and this section when not furnished by the manufacturer as part of the equipment. Install driers in liquid line with service valves and valved bypass line the same size as liquid line in which dryer is installed. Size of driers shall be determined by piping and installation of the unit on location. Install dryers of 50 cubic inches and larger vertically with the cover for removing cartridge at the bottom. Install moisture indicators in the liquid line downstream of the drier. Indicator connections shall be the same size as the liquid line in which it is installed.

3.2.5 Strainer Locations and Installation

Locate strainers close to equipment they are to protect. Provide a strainer in common refrigerant liquid supply to two or more thermal valves in parallel when each thermal valve has a built-in strainer. Install strainers with screen down and in direction of flow as indicated on strainer's body.

3.2.6 Solenoid Valve Installation

Install solenoid valves in horizontal lines with stem vertical and with flow in direction indicated on valve. If not incorporated as integral part of the valve, provide a strainer upstream of the solenoid valve. Provide service valves upstream of the solenoid valve, upstream of the strainer, and downstream of the solenoid valve. Remove the internal parts of the solenoid valve when brazing the valve.

3.3 AUXILIARY DRAIN PANS, DRAIN CONNECTIONS, AND DRAIN LINES

Provide auxiliary drain pans under units located above finished ceilings or over mechanical or electrical equipment where condensate overflow will cause damage to ceilings, piping, and equipment below. Provide separate drain lines for the unit drain and auxiliary drain pans. Trap drain pans from the bottom to ensure complete pan drainage. Provide drain lines full size of drain opening. Traps and piping to drainage disposal points shall conform to Section 22 00 00 PLUMBING, GENERAL PURPOSE.

3.4 ACCESS PANELS

Provide access panels for concealed valves, controls, dampers, and other fittings requiring inspection and maintenance.

3.5 AIR FILTERS

Allow access space for servicing filters. Install filters with suitable sealing to prevent bypassing of air.

3.6 IDENTIFICATION TAGS AND PLATES

Provide equipment, gages, thermometers, valves, and controllers with tags numbered and stamped for their use. Provide plates and tags of brass or suitable nonferrous material, securely mounted or attached. Provide minimum letter and numeral size of 1/8 inch high.

3.7 FIELD QUALITY CONTROL

3.7.1 Leak Testing

Upon completion of installation of air conditioning equipment, test factory- and field-installed refrigerant piping with an electronic-type leak detector. Use same type of refrigerant to be provided in the system for leak testing. When nitrogen is used to boost system pressure for testing, ensure that it is eliminated from the system before charging. Minimum refrigerant leak field test pressure shall be as specified in ANSI/ASHRAE 15 & 34, except that test pressure shall not exceed 150 psig on hermetic compressors unless otherwise specified as a low side test pressure on the equipment nameplate. If leaks are detected at time of installation or during warranty period, remove the entire refrigerant charge from the system, correct leaks, and retest system.

3.7.2 Evacuation, Dehydration, and Charging

After field charged refrigerant system is found to be without leaks or after leaks have been repaired on field-charged and factory-charged systems, evacuate the system using a reliable gage and a vacuum pump capable of pulling a vacuum of at least one mm Hg absolute. Evacuate system in accordance with the triple-evacuation and blotter method or in accordance with equipment manufacturer's printed instructions and recharge system.

3.7.3 Start-Up and Initial Operational Tests

Test the air conditioning systems and systems components for proper operation. Adjust safety and automatic control instruments as necessary to ensure proper operation and sequence. Conduct operational tests for not less than 8 hours.

3.7.4 Performance Tests

Upon completion of evacuation, charging, startup, final leak testing, and proper adjustment of controls, test the systems to demonstrate compliance with performance and capacity requirements. Test systems for not less than 8 hours, record readings hourly. At the end of the test period, average the readings, and the average shall be considered to be the system performance. Record the following readings:
Entering air temperature, Dry Bulb and Wet Bulb, _____ degrees F
Leaving air temperature, Dry Bulb and Wet Bulb, _____ degrees F
outside air temperature, Dry Bulb, _____ degrees F

3.8 WASTE MANAGEMENT

Separate waste in accordance with the Waste Management Plan, placing copper materials in designated areas for reuse. Close and seal tightly all partly used adhesives and solvents; store protected in a well-ventilated, fire-safe area at moderate temperature.

-- End of Section --

SECTION 23 81 28.10 22

VARIABLE REFRIGERANT FLOW (VRF) MULTI-SPLIT AIR CONDITIONING AND HEAT PUMP EQUIPMENT
07/13

PART 1 GENERAL

1.1 REFERENCES

The publications listed below form a part of this specification to the extent referenced. The publications are referred to within the text by the basic designation only.

AMERICAN SOCIETY OF HEATING, REFRIGERATING AND AIR-CONDITIONING ENGINEERS (ASHRAE)

ANSI/ASHRAE 15 & 34	(2013) ANSI/ASHRAE Standard 15-Safety Standard for Refrigeration Systems and ANSI/ASHRAE Standard 34-Designation and Safety Classification of Refrigerants
ASHRAE 90.1 - IP	(2010; Errata 1-4 2011; INT 1-12 2011; Addenda A, B, C, G, H, J, K, O, P, S, Y, Z, BZ, CG, CI and DS 2012; Errata 5-9 2012; INT 13-16 2012; Errata 10-12 2013; INT 17-18 2013) Energy Standard for Buildings Except Low-Rise Residential Buildings

ETL TESTING LABORATORIES (ETL)

ETL DLP	(updated continuously) Directory of ETL Listed Products

INTERNATIONAL ORGANIZATION FOR STANDARDIZATION (ISO)

ISO 9001	(2008; Corr 1 2009) Quality Management Systems- Requirements
ISO 14001	(2009; Corr 1) Environmental Management Systems - Requirements With Guidance for Use - TECHNICAL CORRIGENDUM 1 - Second Edition

NATIONAL FIRE PROTECTION ASSOCIATION (NFPA)

NFPA 70	(2014; AMD 1 2013; Errata 1 2013; AMD 2 2013; Errata 2 2013; AMD 3 2014; Errata 3-4 2014; AMD 4-6 2014) National Electrical Code

U.S. ENVIRONMENTAL PROTECTION AGENCY (EPA)

Energy Star	(1992; R 2006) Energy Star Energy Efficiency Labeling System (FEMP)

1.2 SUBMITTALS

Government approval is required for submittals with a "G" designation; submittals not having a "G" designation are for Contractor Quality Control approval. Submit the following in accordance with Section 01 33 00 SUBMITTAL PROCEDURES:

SD-03 Product Data

Indoor Units; G

Outdoor Units; G

Refrigerant Valves; G

SD-06 Test Reports

Performance Tests; G

SD-08 Manufacturer's Instructions

Manufacturers Installation Instructions

Operation and Maintenance Training

SD-10 Operation and Maintenance Data

Submit in accordance with Section 01 78 23 OPERATION AND MAINTENANCE DATA and 01 78 24.00 20 FACILITY ELECTRONIC OPERATION AND MAINTENANCE SUPPORT INFORMATION (eOMSI).

Operation and Maintenance Manuals

Indoor Units; G, Data Package 3

Outdoor Units; G, Data Package 3

1.3 GENERAL REQUIREMENTS

Section 23 00 00 AIR SUPPLY, DISTRIBUTION, VENTILATION, AND EXHAUST SYSTEMS applies to work specified in this section.

Section 23 05 48.00 40 VIBRATION AND SEISMIC CONTROLS FOR HVAC PIPING AND EQUIPMENT, applies to work specified in this section.

Section 23 23 00 REFRIGERANT PIPING, applies to work specified in this section.

1.4 SYSTEM DESCRIPTION

a. Provide a complete air cooled, multiple evaporator, direct expansion heating and cooling system. The system shall consist of multiple evaporators using PID control The outdoor unit shall be a direct expansion (DX), air-cooled heat recovery air-conditioning system, variable speed driven compressor multi zone split system, using R410A refrigerant. The outdoor unit may connect an indoor evaporator capacity up to 200 percent to that of the outdoor condensing unit capacity. All indoor units shall each be capable of operating separately with individual temperature control.

b. The outdoor units shall be interconnected to the indoor units in accordance with the manufacturer's engineering data detailing each available indoor unit. The indoor units shall be connected to the outdoor utilizing the manufacturer's specified piping joints and headers.

1.5 QUALITY ASSURANCE

a. The units shall be listed by ETL DLP and bear the ETL label.

b. All wiring shall be in accordance with NFPA 70, the National Electric Code.

c. The system will bear the Energy Star label.

d. The system will be produced in an ISO 9001 and ISO 14001 facility. The system shall be factory tested for safety and function.

e. The outdoor unit shall be factory charged with R410A.

1.6 DELIVERY, STORAGE, AND HANDLING

Unit shall be stored and handled according to the manufacturer's recommendations.

1.7 WARRANTY

The units shall have a manufacturer's warranty for a period of one (1) year from date of installation. The units shall have a limited labor warranty for a period of one (1) year from date of installation. The compressors shall have a minimum warranty of 5 years parts and labor.

PART 2 PRODUCTS

2.1 OUTDOOR UNITS

2.1.1 General

The outdoor unit shall be designed specifically for use with all other series components.

a. The outdoor unit shall be factory assembled and pre-wired with all necessary electronic and refrigerant controls. The refrigeration circuit of the condensing unit shall consist of a scroll compressor, motors, fans, condenser coil, electronic expansion valve, solenoid valves, 4 way valve, distribution headers, capillaries, filters, shut off valves, oil separators, service parts, liquid receivers and accumulators.

b. Both liquid and suction lines must be individually insulated between the outdoor and indoor units.

c. The outdoor unit can be wired and piped with outdoor unit access from left, right or rear.

d. The connection ratio of indoor units must be individually insulated between the outdoor and indoor units.

e. The sound pressure dB(A) at rated conditions shall be a value of 58 decibels at 3 feet from the front of the unit. The outdoor unit shall be capable of operating at further reduced noise during the night time.

f. The system will automatically restart operation after a power failure and will not cause any settings to be lost, thus eliminating the need for re-programming.

g. The outdoor unit shall be modular in design and should allow for a side-by-side installation with minimum spacing.

h. The following safety devices shall be included on the condensing unit: high pressure switch, control circuit fuses, crankcase heaters, fusible plug, high pressure switch, overload relay, inverter overload protector, thermal protectors for compressor and fan motors, overcurrent protection for the inverter and anti-recycling timers. To ensure the liquid refrigerant does not flash when supplying to the various fan coil units, the circuit shall be provided with a sub-cooling feature. Oil recovery cycle shall be automatic occurring 2 hours after start of operation and then every 8 hours of operation.

i. The outdoor unit shall be capable of heating operation at 0 degrees F dry bulb ambient temperature without additional low ambient controls. Provide corrosion protection for all exterior HVAC equipment, including air handling units, heat exchanger coil surfaces, equipment casings, air cooled condensing units, air conditioning units that are exposed to the weather.Corrosion protection shall meet or exceed the requirements of a 3000 hoursalt spray test in accordance with ASTM B117. The specified capacities onthe plans and specifications shall be the capacities after the required corrosion protection coatings are applied. This corrosion protection isrequired on HVAC equipment within buildings that are subject
to the outsideweather conditions. Specifically, equipment requiring protection isdefined as the first HVAC equipment (excluding louvers) met by the outsideair in the supply air ductwork system. Provide manufacturer;s standardoff-the-shelf anti-corrosion options for "coastal" or "sea coast"installations that meet or exceed the4 requirements stated above.

2.1.2 Condenser Coil

a. The condenser coil shall be manufactured from copper tubes expanded into aluminum fins to form a mechanical bond.

b. The coil shall be of a waffle louver fin and high heat exchanger, rifled bore tube design to ensure highly efficient performance.

c. The coils shall be complete with corrosion treatment of an acrylic resin type. The thickness of the coating must be between 2.0 to 3.0 microns.

d. Coils shall be tested in accordance with ANSI/ASHRAE 15 & 34 at the factory and be suitable for the working pressure of the installed system.

2.1.3 Compressor

a. The scroll compressor shall be variable speed controlled which is capable of changing the speed to follow the variations in total cooling

load as determined by the suction gas pressure as measured in the condensing unit.

b. The inverter driven compressor in each condensing unit shall be of highly efficient reluctance DC, hermetically sealed scroll.

c. The capacity control range shall be 6 to 100 percent, with 29 individual capacity steps. Each non-inverter compressor shall also be of the hermetically sealed scroll type.

d. Each compressor shall be equipped with a crankcase heater, high pressure safety switch, and internal thermal overload protector.

e. Oil separator shall be standard with equipment together with an oil balancing circuit.

f. The compressor shall be mounted to avoid the transmission of vibration.

g. The control wiring shall be a two-wire multiplex transmission system, making it possible to connect multiple indoor units to one outdoor unit with 2-cable wire, thus simplifying the wiring operation.

h. The VRV system must interface with the BACnet DDC system as described in Section 23 09 23.13 22 BACnet DIRECT DIGITAL CONTROL SYSTEMS FOR HVAC.

i. The control wiring lengths are: outdoor to indoor unit is 6,665 ft, outdoor to central controller is 3,330 ft, outdoor unit to remote controller is 1,665 ft. Wiring type is 16 AWG, 2 wire, non-polarity, non-shielded, stranded.

2.2 BRANCH SELECTOR BOX FOR VRV HEAT RECOVERY SYSTEM

2.2.1 General

The branch selector boxes shall be provided for use with heat recovery system components.

a. These selector boxes shall be factory assembled, wired and piped.

b. The sum of connected capacity of all indoor air handlers shall range up to 200 percent of rated capacity.

c. These branch controllers must be run tested at the factory.

d. These selector boxes must be mounted indoors.

e. When simultaneously heating and cooling, the units in heated mode shall energize their sub cooling solenoid valve.

2.2.2 Unit Cabinet

a. These units shall have a galvanized steel plate casing.

b. Each cabinet shall house multiple refrigeration control valves and a liquid gas separator.

c. The cabinet shall contain a tube in tube heat exchanger.

d. The unit shall have sound absorption thermal insulation material made of flame and heat resistant foamed polyethylene.

2.2.3 Refrigerant Valves

a. The unit shall be furnished with a 3-way refrigerant valve to control the direction of refrigerant flow.

b. Electronic expansion valves shall be used to control the variable refrigerant flow.

c. The refrigerant connections must be of the solder-joint type.

2.2.4 Drainage

a. The unit shall not require drainage.

b. The control voltage between the indoor and outdoor unit shall be non-shielded 2 conductor cable.

2.3 INDOOR UNITS - TYPE PER DRAWINGS

2.3.1 General

The indoor unit shall be a built-in ceiling concealed fan coil unit, as scheduled on drawing, operable with R410A refrigerant, equipped with an electronic expansion valve. The unit shall be constructed of a galvanized steel casing. It shall be available from 2,500 Btu/h to 48,000 Btu/h capacities and compatible with the outdoor unit heat pump and heat recovery model. Computerized PID control shall be used to maintain room temperature within 1 degrees F. The unit shall be equipped with a programmed drying mechanism that dehumidifies while inhibiting changes in room temperature. Included as standard equipment, MERV 8 filters, isolation valves at evaporator, a condensate drain pan and drain pump kit. The indoor units sound pressure shall range from 35 dB(A) to 43 dB(A) at low speed 5 feet below the suction grille.

2.3.2 Indoor Unit

a. The indoor unit shall be completely factory assembled and tested. Included in the unit is factory wiring, piping, electronic proportional expansion valve, control circuit board, fan motor thermal protector, solder-joint connections, condensate drain pan, condensate drain pump, self-diagnostics, auto-restart function, 3-minute fused time delay, and test run switch. The unit shall have an adjustable external static pressure switch.

b. Indoor unit and refrigerant pipes will be charged with dehydrated air prior to shipment from the factory.

c. Both refrigerant lines shall be insulated from the outdoor unit.

d. Return air shall be through a net mold resistant filter.

e. The indoor units shall be equipped with a condensate pan and condensate pump.

f. The indoor units shall be equipped with a return air thermistor.

g. Switch box shall be reached from the side or bottom for ease of service and maintenance.

2.3.3 Unit Cabinet

The cabinet shall be located into the ceiling and ducted to the supply and return openings. The cabinet shall be constructed with sound absorbing foamed polystyrene and polyethylene insulation. Optional high efficiency air filters shall be available for the unit.

2.3.4 Fan

The fan shall be direct-drive Sirocco type fan, statically and dynamically balanced impeller with high and low fan speeds available. The air flow rate shall be available in high and low settings. The fan motor shall be thermally protected and shall be tested in accordance with ASHRAE 90.1 - IP.

2.3.5 Filter

The return air shall be filtered by means of a washable long-life filter with mildew proof resin.

2.3.6 Coil

a. Coils shall be the direct expansion type constructed from copper tubes expanded into aluminum fins to form a mechanical bond.

b. The coil shall be a waffle louver fin and high heat exchange, rifled bore tube design to ensure highly efficient performance.

c. The coil shall be a 3 row cross fin copper evaporator coil with 14 FPI design completely factory tested.

d. The refrigerant connections shall be solder-joint connections and the condensate will be 1 -1/4 inch outside diameter PVC.

e. A condensate pan shall be located under the coil.

f. A condensate pump shall be located below the coil in the condensate pan with a built in safety arm.

g. A thermistor will be located on the liquid and gas line.

2.3.7 Electrical

Transmission (control) wiring between the indoor and outdoor unit shall be a maximum of 3,280 feet (total 6,560 feet). Transmission (control) wiring between the indoor and remote controller shall be a maximum distance of 1,640 feet.

2.3.8 Control

The unit shall have controls to perform input functions necessary to operate the system. The unit shall be compatible with interfacing with connection to BACnet networks.

2.3.9 Accessories

Provide a wall mounted, hard wired remote sensor kit for ceiling-embedded

type fan coils. The temperature sensor shall be located where indicated in the documents, if not indicated, contractor shall request a location from the engineer in writing.

2.4 INDIVIDUAL ZONE CONTROLLER - WIRED REMOTE CONTROLLER

2.4.1 Physical Characteristics

The control system shall be a neutral color plastic material. Each control may have a Liquid Crystal Display (LCD).

2.4.2 Electrical Characteristics

2.4.2.1 General

From each circuit board to the controls, the electrical voltage shall be 16 volts DC.

2.4.2.2 Wiring

Control wiring shall be installed in a daisy chain configuration from indoor unit to indoor unit then to the branch selector box and outdoor unit. Control wiring shall run from the indoor unit terminal block to the specific. The wire shall be a non-shielded, 2-core sheathed vinyl cord or cable, size AWG18-2.

2.4.3 Controller Characteristics

The wired remote controller shall be able to control 1 group (maximum of 16 fan coil units) and shall be able to function as follows:

a. The controller shall have a maximum wiring length of 1,640 feet.

b. The controller shall have a self diagnosis function that constantly monitors the system for malfunctions (total of 80 components).

c. The controller shall be able to immediately display fault location and condition.

d. An LCD digital display will allow the temperature to be set in 1 degrees F units.

e. The controller shall monitor room temperature and preset temperature by microcomputer and can select cool/heat operation mode automatically.

f. The controller shall allow the user to select cool / heat / fan operation mode with indoor remote controller of choice without using the cool / heat selector.

The wired remote controller shall have the following features:

Operation	Start/Stop Operation Mode Temperature Settings 60 Degrees F - 90 Degrees F Set Point Range Fan Speed Airflow Direction

Monitoring	Status Malfunction Flashing Malfunction Content Filter Sign Operation Mode Temperature Setting Permit/Prohibit Selection Fan Speed Airflow Direction
Control Management	Field Setting Mode Group Setting Auto Re-Start

2.5 INTELLIGENT TOUCH CONTROLLER

2.5.1 Physical Characteristics

The control system shall be a neutral color plastic material. The controller has a 5.7" Liquid Crystal Display (LCD, QVGA 320x240, 4096 colors).

2.5.2 Electrical Characteristics

2.5.2.1 General

From each outdoor unit circuit board to the I-touch controller, the daisy chained wiring electrical voltage shall be 16 volts DC.

2.5.2.2 Wiring

For heat recovery the control wiring shall be installed in a daisy chain configuration from outdoor unit to each branch selector box then from the branch selector box to the indoor unit.

2.5.2.3 Control Wiring Size

The wire shall be a non-shielded, stranded, 2 conductor PVC or vinyl clad cable. 18-gauge copper cabling specified. Application of UV stabilized cable should be standard when exposed to outside elements. Plenum rated where applicable. Maximum wiring length between controller and indoor units: 3,280 ft.

2.5.2.4 Power Supply to Controller

24V AC (transformer to be field supplied).

2.5.3 Controller Characteristics

The intelligent controller shall be able to control, via a full color LCD touch screen, up to 10 outdoor units and 64 indoor unit groups (maximum 128 Fan Coil Units) with the following functions:

a. On/Off selection for each fan coil unit or group

b. Temperature set point adjustment for each fan coil unit or group

c. Fan speed adjustment for each fan coil unit or group

d. Heat/cool/automatic changeover mode selection

e. Forced shutdown terminals

f. Priority settings for restriction of local access for start/stop, heat/cool mode and set point adjustment (at local remote controllers if installed)

g. Temperature limitation in both heating and cooling mode

h. Weekly schedule with start up and shut off times, temperature settings and operation modes, 16 operations/ each day can be set in one schedule, and 8 different schedules are available. In addition a yearly calendar is also available for holidays or periods of non use.

i. Actual time and display setting

j. Reset ability for malfunction codes and filter maintenance warning

k. Maximum 13 months backup power supply to maintain the memory

l. Malfunction reports can be sent via e-mail to a cell phone or a PC

m. Remote monitoring via PC, network and web browser (optional). Available web browser are: Real time status monitoring/Operation/Malfunction history display/User password setting and schedule setting

Manufacturer to provide Web based software for off-site monitoring purposes.

2.6 ENERGY RECOVERY GENERATOR

2.6.1 General

The energy recovery ventilator shall consist of the following components: two high-efficiency fans, MERV8 filters, and air to air cross flow total heat exchanger.

2.6.2 Unit Cabinet

A. The cabinet shall be constructed of galvanized steel plate.

b. The unit shall be internally insulated with a self-extinguishing urethane foam.

2.6.3 Fans

a. The fans shall be direct-drive, forward-curved centrifugal type with statically and dynamically balanced impellarsbalanced impellers with extra-high, high, and low fan speeds.

b. The fan motors(s) shall operate on 208-230 volts, 1 phase, 60 hertz.

c. The air flow rate shall be available in extra-high, high, and low settings.

d. The fan motor shall be thermally protected.

2.6.4 Filter

The supply and exhaust air streams shall be filtered rior to entering the heat exchanger core by means of a multidirectional fibrous fleece filter.

2.6.5 Heat Exchanger

The heat exchanger element shall consist of a specially processed. nonflammable, HEP (high efficiency paper) heat exchanger designed to allow the exchange of both sensible and latent energy between the supply and exhaust airstreams. The core material shall be tested and specified in UL 723 and have a flame spread rating of not more than 25, and a smoke delveloped rating of not more than 50.

PART 3 EXECUTION

3.1 INSTALLATION

The system must be installed by factory trained and authorized contractor. The contractor shall install the VRF system in accordance with the recommendations of the VRF manufacturer as outlined in the Manufacturers Installation Instructions.

3.2 START-UP

Equipment start-up, performance tests, and commissioning shall be provided by a factory trained and authorized contractor. Control start-up and commissioning shall be provided by the factory.

3.3 PRODUCT SUPPORT

Installation, Operation and Maintenance Manuals are to be provided to the owner once commissioning is complete. Eight hours of Operation and Maintenance training will be provided to the owner and owner's personnel once commissioning is complete.

-- End of Section --

THIS PAGE HAS BEEN INTENTIONALLY LEFT BLANK

SECTION 23 82 00.00 20

TERMINAL HEATING AND COOLING UNITS
11/08

PART 1 GENERAL

1.1 REFERENCES

The publications listed below form a part of this specification to the extent referenced. The publications are referred to within the text by the basic designation only.

ASTM INTERNATIONAL (ASTM)

ASTM A123/A123M	(2013) Standard Specification for Zinc (Hot-Dip Galvanized) Coatings on Iron and Steel Products
ASTM B117	(2011) Standard Practice for Operating Salt Spray (Fog) Apparatus
ASTM D1654	(2008) Evaluation of Painted or Coated Specimens Subjected to Corrosive Environments

NATIONAL ELECTRICAL MANUFACTURERS ASSOCIATION (NEMA)

NEMA ICS 2	(2000; R 2005; Errata 2008) Standard for Controllers, Contactors, and Overload Relays Rated 600 V
NEMA ICS 6	(1993; R 2011) Enclosures
NEMA MG 1	(2011; Errata 2012) Motors and Generators

NATIONAL FIRE PROTECTION ASSOCIATION (NFPA)

NFPA 70	(2014; AMD 1 2013; Errata 1 2013; AMD 2 2013; Errata 2 2013; AMD 3 2014; Errata 3-4 2014; AMD 4-6 2014) National Electrical Code
NFPA 90A	(2015) Standard for the Installation of Air Conditioning and Ventilating Systems
NFPA 90B	(2012) Standard for the Installation of Warm Air Heating and Air Conditioning Systems
NFPA 91	(2010) Standard for Exhaust Systems for Air Conveying of Vapors, Gases, Mists and Noncombustible Particulate Solids

1.2 RELATED REQUIREMENTS

Section 23 03 00.00 20 BASIC MECHANICAL MATERIALS AND METHODS, applies to this section with additions and modifications specified herein.

1.3 SUBMITTALS

Government approval is required for submittals with a "G" designation; submittals not having a "G" designation are for Contractor Quality Control approval. The following shall be submitted in accordance with Section 01 33 00 SUBMITTAL PROCEDURES:

SD-03 Product Data

Unit heaters

SD-10 Operation and Maintenance Data

Unit heaters, Data Package 2

Submit in accordance with Section 01 78 23 OPERATION AND MAINTENANCE DATAand Section 01 78 24.00 20 FACILITY ELECTRONIC OPERATION AND MAINTENANCE SUPPORT INFORMATION (eOMSI).

PART 2 PRODUCTS

2.1 UNIT HEATERS

Self-contained and factory assembled, propeller or centrifugal fan with capacities expressed as Btu per hour output and cubic foot-per-minute air delivery, operating conditions, and mounting arrangements as indicated. Average fan bearing life shall be minimum 200,000 hours at operating conditions. Provide fan motor with direct drive. Construct fan-guard motor mount of steel wire. Equip each heater with individually adjustable package discharge louver. Louvers may be substituted by discharge cones or diffusers. Provide thermostats as indicated. Furnish circuit breaker disconnect switch.

2.1.1 Electric Unit Heater

UL listed; wattage, voltage, phase, and number of steps as indicated. Provide control-circuit terminals and single source of power supply. Heater 5 Kw and larger shall be three-phase, with load balanced on each of the three phases. Limit leaving air temperature below 140 degrees F at 60 degrees F entering air.

2.1.1.1 Casing

Minimum 21 gage steel.

2.1.1.2 Heating Element

Nickel-chromium heating wire element, free from expansion noise and 60 Hz hum. Embed element in magnesium-oxide insulating refractory. Seal element in high-mass steel or corrosion-resisting metallic sheath with fins. Enclose element ends in terminal box. Space fins at maximum six fins per inch. Limit fin surface temperature 550 degrees Fat any point during normal operation.

2.1.1.3 Controls

Include limit controls for thermal overheat protection of heaters. For remote thermostatic operation, provide contactor rated for 100,000 duty cycles. Provide a control transformer to supply 120-volt thermostat control circuit for each heater. Provide room thermostat for pilot duty.

2.1.1.4 Wiring

Completely factory-prewired to terminal strips, ready to receive branch circuit and control connections for 140 degrees Fcopper wiring.

2.2 FAN

Provide steel or aluminum fans with ball or roller bearings for motors over 1/8 horsepower (hp) and sleeve bearings for motors 1/8 hp and under. Provide sleeve bearings with oil reservoir, if not permanently lubricated.

2.3 MOTOR AND STARTER

NEMA MG 1, and NEMA ICS 2, and NEMA ICS 6, respectively. Provide continuous-duty motor with built-in automatic reset thermal overload protection. For motor 1/2 hp and larger, use three-phase. Provide single-phase motor of permanent split capacitor or capacitor start. Limit motor speed at 1800 r/min. Wire motor to heater power supply source.

2.4 NOISE, VIBRATION AND SEISMIC CONTROLS

Section 23 05 48.00 40 VIBRATION AND SEISMIC CONTROLS FOR HVAC PIPING AND EQUIPMENT.

2.5 SOURCE QUALITY CONTROL

Special protection is not required for equipment that has a zinc coating conforming to ASTM A123/A123M . Otherwise, protect affected equipment items by manufacturers' corrosion-inhibiting coating or paint system that has proved capable of withstanding salt-spray test in accordance with ASTM B117. Test indoor equipment for 125 hours; test outdoor equipment for 500 hours. For each specimen, perform a scratch test as defined in ASTM D1654.

PART 3 EXECUTION

3.1 INSTALLATION

Install equipment where indicated and as recommended by manufacturer's recommendations, NFPA 90A, NFPA 90B, NFPA 91.

3.1.1 Suspensions of Equipment

Provide equipment supports including beam clamps, turnbuckles and twist links or weld-wire chains, wire ropes with rope clips and rope thimbles, threaded-eye rod hangers with lock nuts and heat-duct hangers, threaded-eye bolts with expansion screws, brackets, platform and mounting frame, and vibration isolators. Locate equipment in such a manner that working space is available for servicing, such as vacuum pump and burner removal, access to automatic controls, and lubrication. Provide electrical isolation of dissimilar metals. Clean interior of casings or cabinets before and after completion of installation.

3.1.2 Electrical Work

NFPA 70 and Division 26, "Electrical Work." When replacing original control wires, provide No. 16 AWG with minimum 105 degrees C insulation.

3.2 FIELD QUALITY CONTROL

Administer, schedule, and conduct specified tests. Furnish personnel, instruments and equipment for such tests. Correct defects and repeat the respective inspections and tests. Conduct inspections and testing in the presence of the Contracting Officer.

3.2.1 Test Instruments and Apparatus

Provide instruments and apparatus currently certified as being accurate to within one percent of their full scale. Use gages with a maximum scale between 1 1/2 and 2 times test pressure.

3.2.2 Field Inspection

Prior to initial operation, inspect equipment installation to ensure that indicated and specified requirements have been met.

3.2.3 Field Tests

3.2.3.1 Insulation-Resistance Tests for Electrical Equipment

At the completion of wiring, test 600 volt wiring to verify that no short circuits exist before or after the attachment of electrical heating equipment to the power source. Make tests with an instrument which applies a voltage of approximately 500 volts for a direct reading of insulation resistance.

3.2.3.2 Operational Tests

After completing insulation-resistance tests, operate equipment continuously under varying load conditions to verify functioning of combustion controls, electrical controls, flame safeguard controls, safety interlocks, and specified operating sequence. Run each test for a minimum period of one hour.

-- End of Section --

SECTION 26 00 00.00 20

BASIC ELECTRICAL MATERIALS AND METHODS
07/06

PART 1 GENERAL

1.1 REFERENCES

The publications listed below form a part of this specification to the extent referenced. The publications are referred to in the text by the basic designation only.

ASTM INTERNATIONAL (ASTM)

ASTM D709	(2013) Laminated Thermosetting Materials

INSTITUTE OF ELECTRICAL AND ELECTRONICS ENGINEERS (IEEE)

IEEE 100	(2000; Archived) The Authoritative Dictionary of IEEE Standards Terms
IEEE C2	(2012; Errata 2012; INT 1-4 2012; INT 5-7 2013) National Electrical Safety Code
IEEE C57.12.28	(2005; INT 3 2011) Standard for Pad-Mounted Equipment - Enclosure Integrity
IEEE C57.12.29	(2005) Standard for Pad-Mounted Equipment - Enclosure Integrity for Coastal Environments

NATIONAL ELECTRICAL MANUFACTURERS ASSOCIATION (NEMA)

NEMA 250	(2008) Enclosures for Electrical Equipment (1000 Volts Maximum)

NATIONAL FIRE PROTECTION ASSOCIATION (NFPA)

NFPA 70	(2014; AMD 1 2013; Errata 1 2013; AMD 2 2013; Errata 2 2013; AMD 3 2014; Errata 3-4 2014; AMD 4-6 2014) National Electrical Code

1.2 RELATED REQUIREMENTS

This section applies to certain sections of Divisions 22 and 23, PLUMBING and HEATING VENTILATING AND AIR CONDITIONING. This section applies to all sections of Division 26 and 33, ELECTRICAL and UTILITIES, of this project specification unless specified otherwise in the individual sections. This section has been incorporated into, and thus, does not apply to, and is not referenced in the following sections.

Section 26 12 19.10 THREE-PHASE PAD MOUNTED TRANSFORMERS

Section 26 20 00 INTERIOR DISTRIBUTION SYSTEM
Section 26 51 00 INTERIOR LIGHTING

Section 26 56 00 EXTERIOR LIGHTING
Section 27 10 00 BUILDING TELECOMMUNICATIONS CABLING SYSTEM
Section 33 71 02 UNDERGROUND ELECTRICAL DISTRIBUTION
Section 33 82 00 TELECOMMUNICATIONS OUTSIDE PLANT (OSP)

1.3 DEFINITIONS

a. Unless otherwise specified or indicated, electrical and electronics terms used in these specifications, and on the drawings, shall be as defined in IEEE 100.

b. The technical sections referred to herein are those specification sections that describe products, installation procedures, and equipment operations and that refer to this section for detailed description of submittal types.

c. The technical paragraphs referred to herein are those paragraphs in PART 2 - PRODUCTS and PART 3 - EXECUTION of the technical sections that describe products, systems, installation procedures, equipment, and test methods.

1.4 ELECTRICAL CHARACTERISTICS

Electrical characteristics for this project shall be 12.47 kV primary, three phase, four wire, 60 Hz, and 480Y/277 volts secondary, three phase, four wire and 208Y/120 volts secondary, three phase, four wire. Final connections to the power distribution system at the existing pole shall be made by the Contractor as directed by the Contracting Officer .

1.5 ADDITIONAL SUBMITTALS INFORMATION

Submittals required in other sections that refer to this section must conform to the following additional requirements as applicable.

1.5.1 Shop Drawings (SD-02)

Include wiring diagrams and installation details of equipment indicating proposed location, layout and arrangement, control panels, accessories, piping, ductwork, and other items that must be shown to ensure a coordinated installation. Wiring diagrams shall identify circuit terminals and indicate the internal wiring for each item of equipment and the interconnection between each item of equipment. Drawings shall indicate adequate clearance for operation, maintenance, and replacement of operating equipment devices.

1.5.2 Product Data (SD-03)

Submittal shall include performance and characteristic curves.

1.6 QUALITY ASSURANCE

1.6.1 Regulatory Requirements

In each of the publications referred to herein, consider the advisory provisions to be mandatory, as though the word, "shall" had been substituted for "should" wherever it appears. Interpret references in these publications to the "authority having jurisdiction," or words of similar meaning, to mean the Contracting Officer. Equipment, materials, installation, and workmanship shall be in accordance with the mandatory and

advisory provisions of NFPA 70 unless more stringent requirements are specified or indicated.

1.6.2 Standard Products

Provide materials and equipment that are products of manufacturers regularly engaged in the production of such products which are of equal material, design and workmanship. Products shall have been in satisfactory commercial or industrial use for 2 years prior to bid opening. The 2-year period shall include applications of equipment and materials under similar circumstances and of similar size. The product shall have been on sale on the commercial market through advertisements, manufacturers' catalogs, or brochures during the 2-year period. Where two or more items of the same class of equipment are required, these items shall be products of a single manufacturer; however, the component parts of the item need not be the products of the same manufacturer unless stated in the technical section.

1.6.2.1 Alternative Qualifications

Products having less than a 2-year field service record will be acceptable if a certified record of satisfactory field operation for not less than 6000 hours, exclusive of the manufacturers' factory or laboratory tests, is furnished.

1.6.2.2 Material and Equipment Manufacturing Date

Products manufactured more than 3 years prior to date of delivery to site shall not be used, unless specified otherwise.

1.7 WARRANTY

The equipment items shall be supported by service organizations which are reasonably convenient to the equipment installation in order to render satisfactory service to the equipment on a regular and emergency basis during the warranty period of the contract.

1.8 POSTED OPERATING INSTRUCTIONS

Provide for each system and principal item of equipment as specified in the technical sections for use by operation and maintenance personnel. The operating instructions shall include the following:

a. Wiring diagrams, control diagrams, and control sequence for each principal system and item of equipment.

b. Start up, proper adjustment, operating, lubrication, and shutdown procedures.

c. Safety precautions.

d. The procedure in the event of equipment failure.

e. Other items of instruction as recommended by the manufacturer of each system or item of equipment.

Print or engrave operating instructions and frame under glass or in approved laminated plastic. Post instructions where directed. For operating instructions exposed to the weather, provide weather-resistant materials or weatherproof enclosures. Operating instructions shall not

fade when exposed to sunlight and shall be secured to prevent easy removal or peeling.

1.9 MANUFACTURER'S NAMEPLATE

Each item of equipment shall have a nameplate bearing the manufacturer's name, address, model number, and serial number securely affixed in a conspicuous place; the nameplate of the distributing agent will not be acceptable.

1.10 FIELD FABRICATED NAMEPLATES

ASTM D709. Provide laminated plastic nameplates for each equipment enclosure, relay, switch, and device; as specified in the technical sections or as indicated on the drawings. Each nameplate inscription shall identify the function and, when applicable, the position. Nameplates shall be melamine plastic, 0.125 inch thick, white with black center core. Surface shall be matte finish. Corners shall be square. Accurately align lettering and engrave into the core. Minimum size of nameplates shall be one by 2.5 inches. Lettering shall be a minimum of 0.25 inch high normal block style.

1.11 WARNING SIGNS

Provide warning signs for the enclosures of electrical equipment including substations, pad-mounted transformers, pad-mounted switches, generators, and switchgear having a nominal rating exceeding 600 volts.

a. When the enclosure integrity of such equipment is specified to be in accordance with IEEE C57.12.28 or IEEE C57.12.29, such as for pad-mounted transformers and pad-mounted SF6 switches, provide self-adhesive warning signs on the outside of the high voltage compartment door(s). Sign shall be a decal and shall have nominal dimensions of 7 by 10 inches with the legend "DANGER HIGH VOLTAGE" printed in two lines of nominal 2 inch high letters. The word "DANGER" shall be in white letters on a red background and the words "HIGH VOLTAGE" shall be in black letters on a white background. Decal shall be Panduit No. PPSO710D72 or approved equal.

1.12 ELECTRICAL REQUIREMENTS

Electrical installations shall conform to IEEE C2, NFPA 70, and requirements specified herein.

1.13 INSTRUCTION TO GOVERNMENT PERSONNEL

Where specified in the technical sections, furnish the services of competent instructors to give full instruction to designated Government personnel in the adjustment, operation, and maintenance of the specified systems and equipment, including pertinent safety requirements as required. Instructors shall be thoroughly familiar with all parts of the installation and shall be trained in operating theory as well as practical operation and maintenance work. Instruction shall be given during the first regular work week after the equipment or system has been accepted and turned over to the Government for regular operation. The number of man-days (8 hours per day) of instruction furnished shall be as specified in the individual section.

PART 2 PRODUCTS

2.1 FACTORY APPLIED FINISH

Electrical equipment shall have factory-applied painting systems which shall, as a minimum, meet the requirements of NEMA 250 corrosion-resistance test.

PART 3 EXECUTION

3.1 FIELD APPLIED PAINTING

Paint electrical equipment as required to match finish of adjacent surfaces or to meet the indicated or specified safety criteria. Painting shall be as specified in the section specifying the associated electrical equipment.

3.2 FIELD FABRICATED NAMEPLATE MOUNTING

Provide number, location, and letter designation of nameplates as indicated. Fasten nameplates to the device with a minimum of two sheet-metal screws or two rivets.

3.3 WARNING SIGN MOUNTING

Provide the number of signs required to be readable from each accessible side, but space the signs a maximum of 30 feet apart.

-- End of Section --

THIS PAGE HAS BEEN INTENTIONALLY LEFT BLANK

SECTION 26 08 00

APPARATUS INSPECTION AND TESTING
08/08

PART 1 GENERAL

1.1 REFERENCES

The publications listed below form a part of this specification to the extent referenced. The publications are referred to within the text by the basic designation only.

INTERNATIONAL ELECTRICAL TESTING ASSOCIATION (NETA

NETA ATS	(2013) Standard for Acceptance Testing Specifications for Electrical Power Equipment and Systems

1.2 RELATED REQUIREMENTS

Section 26 00 00.00 20 BASIC ELECTRICAL MATERIALS AND METHODS applies to this section with additions and modifications specified herein.

1.3 SUBMITTALS

Government approval is required for submittals with a "G" designation; submittals not having a "G" designation are for Contractor Quality Control approval. The following shall be submitted in accordance with Section 01 33 00 SUBMITTAL PROCEDURES:

SD-06 Test Reports

Acceptance tests and inspections; G

SD-07 Certificates

Qualifications of organization, and lead engineering technician; G

Acceptance test and inspections procedure; G

1.4 QUALITY ASSURANCE

1.4.1 Qualifications

Contractor shall engage the services of a qualified testing organization to provide inspection, testing, calibration, and adjustment of the electrical distribution system and generation equipment listed in paragraph entitled "Acceptance Tests and Inspections" herein. Organization shall be independent of the supplier, manufacturer, and installer of the equipment. The organization shall be a first tier subcontractor. No work required by this section of the specification shall be performed by a second tier subcontractor.

a. Submit name and qualifications of organization. Organization shall have been regularly engaged in the testing of electrical materials, devices, installations, and systems for a minimum of 5 years. The organization shall have a calibration program, and test instruments

used shall be calibrated in accordance with NETA ATS.

b. Submit name and qualifications of the lead engineering technician performing the required testing services. Include a list of three comparable jobs performed by the technician with specific names and telephone numbers for reference. Testing, inspection, calibration, and adjustments shall be performed by an engineering technician, certified by NETA or the National Institute for Certification in Engineering Technologies (NICET) with a minimum of 5 years' experience inspecting, testing, and calibrating electrical distribution and generation equipment, systems, and devices.

1.4.2 Acceptance Tests and Inspections Reports

Submit certified copies of inspection reports and test reports. Reports shall include certification of compliance with specified requirements, identify deficiencies, and recommend corrective action when appropriate. Type and neatly bind test reports to form a part of the final record. Submit test reports documenting the results of each test not more than 10 days after test is completed.

1.4.3 Acceptance Test and Inspections Procedure

Submit test procedure reports for each item of equipment to be field tested at least 45 days prior to planned testing date. Do not perform testing until after test procedure has been approved.

PART 2 PRODUCTS

Not used.

PART 3 EXECUTION

3.1 ACCEPTANCE TESTS AND INSPECTIONS

Testing organization shall perform acceptance tests and inspections. Test methods, procedures, and test values shall be performed and evaluated in accordance with NETA ATS, the manufacturer's recommendations, and paragraph entitled "Field Quality Control" of each applicable specification section. Tests identified as optional in NETA ATS are not required unless otherwise specified. Equipment shall be placed in service only after completion of required tests and evaluation of the test results have been completed. Contractor shall supply to the testing organization complete sets of shop drawings, settings of adjustable devices, and other information necessary for an accurate test and inspection of the system prior to the performance of any final testing. Contracting Officer shall be notified at least 14 days in advance of when tests will be conducted by the testing organization. Perform acceptance tests and inspections on applicable equipment and systems specified in the following sections:

a. Section 26 12 19.10 THREE-PHASE PAD-MOUNTED TRANSFORMERS

b. Section 33 71 01 OVERHEAD TRANSMISSION AND DISTRIBUTION

c. Section 33 71 02 UNDERGROUND ELECTRICAL DISTRIBUTION

3.2 SYSTEM ACCEPTANCE

Final acceptance of the system is contingent upon satisfactory completion of acceptance tests and inspections.

3.3 PLACING EQUIPMENT IN SERVICE

A representative of the approved testing organization shall be present when equipment tested by the organization is initially energized and placed in service.

-- End of Section --

THIS PAGE HAS BEEN INTENTIONALLY LEFT BLANK

SECTION 26 08 10.00 22

COMMISSIONING OF ELECTRICAL SYSTEMS
10/13

PART 1 GENERAL

1.1 REFERENCES

The publications listed below form a part of this specification to the extent referenced. The publications are referred to within the text by the basic designation only.

ASSOCIATED AIR BALANCE COUNCIL (AABC)

ACG Commissioning Guideline	(2005) Commissioning Guideline

NATIONAL ENVIRONMENTAL BALANCING BUREAU (NEBB)

NEBB Commissioning Standard	(2009) Procedural Standards for Whole Building Systems Commissioning of New Construction; 3rd Edition

INTERNATIONAL ELECTRICAL TESTING ASSOCIATION (NETA)

NETA ATS	(2013) Standard for Acceptance Testing Specifications for Electrical Power Equipment and Systems

NATIONAL ELECTRICAL CONTRACTORS ASSOCIATION (NECA)

NECA/NEIS 90	(2009) Standard for Commissioning Building Electrical Systems

NATIONAL FIRE PROTECTION ASSOCIATION (NFPA)

NFPA 110	(20131) Standard for Emergency and Standby Power Systems

1.2 SUMMARY

1.2.1 General

The requirements of this section apply to all sections of Division 26. Refer to Section 01 91 13.00 22 GENERAL COMMISSIONING REQUIREMENTS FOR CONSTRUCTION for general commissioning requirements applicable to the entire project.

The purpose of this Section is to define Contractor responsibilities in the commissioning process, which are being directed by the Government. Additional electrical system testing is required under some Division 27, and 33 Specification Sections. NECA/NEIS 90 provides additional guidance for the commissioning of electrical systems.

This Section includes Commissioning process requirements for electrical systems, assemblies, components and equipment, and requires the participation of the Contractor, to ensure that the work has been completed as specified and that systems are functioning in the manner consistent with

the Contract Documents as described herein, and as specified in the system operating criteria for this project.

a. Commissioning will commence according to the approved construction schedule, after electrical system rough-in, and after the preliminary inspection punchlist items and commissioning deficiencies are completed by the Contractor.

b. Construction phase commissioning process shall include the following:

   1. Step One: Installation Verification.

   2. Step Two: System Startup.

   3. Step Three: Functional Performance Testing.

The electrical commissioning process includes the following tasks:

a. Testing and startup of electrical equipment and systems.

b. Electrical equipment and system verification checks.

c. Assistance in functional performance testing to verify equipment and system performance.

d. Provide qualified personnel to assist in commissioning tests, including seasonal testing.

e. Complete and endorse construction phase checklists provided by Commissioning Authority (CxA) to assure equipment and systems are fully operational and ready for functional performance testing.

f. Provide equipment, materials, and labor necessary to correct deficiencies found during commissioning process and to fulfill contract and warranty requirements.

g. Provide operation and maintenance information and record drawings to Commissioning Authority for review verification and organization, prior to distribution.

h. Provide assistance to CxA to develop, edit, and document system operation descriptions.

i. Provide training for systems specified in this Section, coordinated with the CxA.

The commissioning process will also be used to develop test protocol and record the associated test data in an effort to advance the building electrical systems from a state of substantial completion to a full dynamic operation.

The commissioning process is also intended to assist the Government's operating and maintenance staff in the training and familiarization with new electrical systems and equipment. The Commissioning Plan and final Commissioning Report should also serve as tools to reduce post-occupancy critical systems operational difficulty or failure. Operational staff training is essential to the commissioning process and will run concurrently with Steps One through Three referenced above.

The commissioning required by this section is intended to supplement the inspection, testing, and training requirements contained in the technical sections and to consolidate the reports required by those sections. Duplication of the inspection, testing and training required by the technical sections is not required. This section does include additional commissioning requirements.

1.3 DEFINITIONS

Refer to Section 01 91 13.00 22 GENERAL COMMISSIONING REQUIREMENTS FOR CONSTRUCTION, Article "Definitions" for definintions applicable to this section.

1.4 COMMISSIONING SUBMITTAL REQUIREMENTS

Commissioning Authority (CxA) shall prepare Commissioning Plan, Prefunctional Checklists, Functional Performance Test (FPT) procedures, narrative descriptions of the design intent for each of the systems identified, and the Commissioning Report, and execute and document results.

a. Contractor shall provide CxA with documentation required for Commissioning Work. At minimum, documentation shall include: detailed start-up procedures, full sequences of operation, Operating and Maintenance data and performance data, control drawings, and details of Government-contracted tests.

b. Contractor shall submit to CxA the manufacturers' installation and checkout materials actually shipped inside equipment and actual field checkout sheet forms used by factory or field technicians.

c. Contractor shall review and approve other relative documentation for impact on FPT's of the systems:

    1. Verify manufacturer's installation instructions are followed by completing the prefunctional checklists for all electrical equipment.

    2. Factory Performance Test Reports: Review and compile all factory performance data to assure that the data is complete prior to executing the FPT's.

    3. Completed equipment Start-up certification forms along with the manufacturer's field or factory performance and Start-up test documentation: Subcontractor performing the test will review the documentation prior to commencing with the scheduled FPT's. Government may require that system one-line diagrams and applicable Specification Section(s) be attached to the FPT documentation.

    4. Operating and Maintenance (O&M) information per requirements of the Technical Specifications and Division 01 requirements: To validate adequacy and completeness of the FPT, the Contractor shall ensure that the O&M manual content, marked-up record Drawings and Specifications, component submittal drawings, and other pertinent documents are available at the Project Site for review.

1.5 SYSTEMS TO BE COMMISSIONED

1.5.1 Electrical (Divisions 26 and 33)

The following systems shall be commissioned as part of this project. Comply with the requirements of Section 26 08 00 APPARATUS INSPECTION AND TESTING as applicable.

a. Section 26 12 19.10 THREE-PHASE PAD-MOUNTED TRANSFORMERS.

b. Section 26 20 00 INTERIOR DISTRIBUTION SYSTEM

1. Distribution and Branch Circuit Panelboards.

2. Normal Power Distribution Systems: Building grounding system tests, coordination study review, major circuit breaker settings, meters and gages, receptacles, switches, and controls, etc.

3. Security System. For empty conduit system, confirm raceways and device boxes are provided as required for the system that will be provided by others.

c. Section 26 41 00 LIGHTNING PROTECTION SYSTEM.

d. Section 26 51 00 INTERIOR LIGHTING.

1. Lighting Fixtures and Controls: Occupancy sensors, and architectural dimming control system hardware/software/scene settings/zone settings/occupancy sensor interface/unoccupied cycle control.

e. Section 26 56 00 EXTERIOR LIGHTING.

1. Lighting Fixtures and Controls: Photocells, time switches, controls, contactors, fixture aiming, etc.

f. Section 33 71 01 OVERHEAD TRANSMISSION AND DISTRIBUTION.

g. Section 33 71 02 UNDERGROUND ELECTRICAL DISTRIBUTION.

1.5.2 Communications (Divisions 27 and 33)

The following systems shall be commissioned as part of this project:

a. Section 27 10 00 BUILDING TELECOMMUNICATIONS CABLING SYSTEM.

b. Audio-Visual Systems. Section 27 40 00 Audio Video (A/V) Communications

c. Section 33 82 00 TELECOMMUNICATIONS OUTSIDE PLANT (OSP).

1.6 COMMISSIONING RESPONSIBILITIES

1.6.1 Electrical Installer Commissioning Responsibilities

a. Attend commissioning meetings, preinstallation meetings and other project meetings scheduled to facilitate the commissioning process.

b. Provide manufacturer's data sheets and shop drawings for equipment to be commissioned. Provide instructions and demonstrations for

Government personnel. Provide additional requested documentation to the CxA for the development of Prefunctional Checklists and Functional Performance Test procedures.

c. Ensure subcontractors perform assigned commissioning responsibilities as specified herein.

d. Ensure participation of equipment manufacturers in appropriate startup, testing, and training activities when required by individual equipment specifications and/or the Commissioning Plan.

e. Develop startup and initial checkout plan using manufacturer's startup procedures and prefunctional (construction) checklists for equipment and systems to be commissioned.

f. During verification check and startup process, execute electrical related portions of checklists for equipment and systems to be commissioned.

g. Perform and document completed installation checklists, startup checklists and reports, and system operational checkout procedures, providing copy to CxA.

h. Where specified in the technical sections, provide manufacturer's representatives to execute starting of equipment. Ensure representatives are available and present during agreed upon schedules and are in attendance for duration to complete tests, adjustments and problem-solving.

i. Coordinate with equipment manufacturers to determine specific requirements to maintain validity of warranties.

j. Provide personnel to assist CxA during equipment or system verification checks and functional performance tests.

k. Prior to functional performance tests, review test procedures to ensure feasibility, safety and equipment protection and provide necessary written alarm limits to be used during tests.

l. Prior to startup, inspect, check, and verify correct and complete installation of equipment and system components for verification checks included in commissioning plan. When deficient or incomplete work is discovered, ensure corrective action is taken and re-check until equipment or system is ready for startup.

m. Provide factory supervised startup services for equipment and systems where specified. Coordinate work with manufacturer and CxA.

n. Perform verification checks and startup on equipment and systems as specified.

o. Assist CxA in performing functional performance tests on equipment and systems as specified.

p. Assist in performing operation and maintenance training sessions scheduled by the Contractor.

q. Conduct electrical system orientation and inspection.

1.6.2 Electrical Testing Agency (ETA) Commissioning Responsibilities:

When requested by Government, Contractor shall retain an independent Electrical Testing Agency (ETA) for the purpose of checking and testing of the electrical power distribution equipment per National Electrical Testing Association (NETA). Commissioning responsibiliteis shall include:

a. Attend commissioning meetings.

b. Obtain all required manufacturer's data to facilitate tests.

c. Provide assistance to the CxA in the completion of the specific prefunctional checklists and functional performance test procedures. Generally, ETA shall provide their standard forms to document the NETA tests to be incorporated into the Prefunctional Checklist and Functional Performance Tests record.

d. During related tests, execute and document the tests in the approved forms and/or test record.

e. Perform and clearly document all completed Start-up and system operational checkout procedures, providing a copy to the Contractor.

f. Clearly indicate any deficiencies identified during testing and add to an action list for resolution and tracking. The field technicians shall keep a running log of events and issues. Submit reports of discrepancies, deficient or uncompleted work by others, Contract interpretation requests and lists of completed tests to the Contractor at least twice a week and provide technical assistance in the resolution of deficiencies.

g. Provide skilled technicians to execute testing. Ensure that they are available and present during the agreed-upon schedules and for sufficient duration to complete the necessary tests, adjustments and problem solving.

h. Perform thermographic imaging of loaded panel at time designated by Contractor.

1.7 SEQUENCING AND SCHEDULING

Begin the work described in this Section only after all work required in related Sections has been successfully completed, and all test and inspection reports and operation and maintenance manuals required in these Sections have been submitted and approved. Pre-functional (construction) checklists shall be performed for the installation of electrical equipment at appropriate times during the construction phase of the Contract.

PART 2 PRODUCTS

2.1 GENERAL

All materials shall meet or exceed all applicable referenced standards, federal, state and local requirements, and conform to codes and ordinances of authorities having jurisdiction.

2.2 TEST EQUIPMENT

Provide all specialized tools, test equipment and instruments required to

execute Start-up, checkout, and testing of equipment.

All specialized tools, test equipment, and instruments required to execute Start-up, checkout, and testing of equipment shall be of sufficient quality and accuracy to test and/or measure system performance within specified tolerances. A testing laboratory must have calibrated test equipment within the previous twelve (12) months. Calibration shall be NIST traceable, and shall be in accordance with the requirements of the NEBB Commissioning Standard or the ACG Commissioning Guideline. Contractor must calibrate test equipment and instruments according to manufacturer's recommended intervals and whenever the test equipment is dropped or damaged. Calibration tags must be affixed to the test equipment or certificates readily available.

Infrared Thermographic Scanner: Infrared scanning equipment shall be an AGA (or approved equal) thermovision set capable of viewing an entire bus or equipment assembly at one time and have a sensitivity of 0.2 degrees C with a liquid nitrogen reference.

PART 3 EXECUTION

3.1 GENERAL

The Contractor shall be responsible for performing procedures presented in the specifications, and as indicated on the contract drawings and as detailed in the Functional Performance Tests (FPT) procedures. Members of the designated Commissioning Team shall witness various portions of the commissioning process. Responsibilities for these activities are listed in the following paragraphs. Commissioning Team members shall sign-off on appropriate sections after verifying installation, operation, or documentation. Final sign-off shall be by the Government and the Commissioning Authority (CxA).

Any test ports, gauges, test equipment, etc., needed to accomplish the functional performance tests shall be provided by the Contractor.

The Contractor shall provide to the Commissioning Team documentation of calibration of controls. Documentation shall include dates, setpoints, calibration coefficients, control loop verification, and other data required to verify system check-out. Documentation shall be dated and initialed by field engineer or technician performing the work.

3.2 COMMISSIONING PLAN

The commissioning plan will be developed by the third party CxA and submitted to the Government for approval. The approved commissioning plan outlines the organization, scheduling, team members, and documentation pertaining to the overall commissioning process.

3.3 CONSTRUCTION CHECKLIST

A checklist shall be developed by the CxA for each component of commissioned equipment and systems to ensure that the specified equipment has been provided, is properly installed, and has been initially started and checked out adequately in preparation for full operation and functional testing (e.g., belt tension, fluids topped, labels affixed, gages in place, sensors calibrated, voltage balanced, rotation correct, etc.).

The CxA for this project shall develop 'Construction Checklists' for this

project, which shall be reviewed and approved by the Government; and then provided to, and completed by the Contractor to ensure that all equipment and systems are installed properly; have been started up preliminarily, and are ready for commissioning and performance verification testing.

3.4 FUNCTIONAL PERFORMANCE TEST (FPT) PROCEDURES

The FPT procedures at a minimum shall consist of the following sections:

a. Narrative Description: Provide a narrative description of the design intent of each of the electrical systems to be tested, their intended modes and sequences of operation.

b. Testing Prerequisites: Provide verification and documentation that primary systems that support or interact with the system that the FPT has been prepared for are completed, tested and operational.

c. Installation Verification: Provide verification that the system installation is completed and is ready for commissioning.

d. Commencement of Functional Performance Testing: Record the date and time of the start of system commissioning.

e. System Condition Prior to Staring Performance Testing: Record the current set points and parameters of the system at the start of commissioning.

f. Functional Performance Test: This section shall provide the following:

    1. Sequential steps required to set parameters and conditions required to test components and functions throughout intended ranges of operation.

    2. Full range of checks and tests carried out to determine if connections, components, subsystems, systems and interfaces between systems function in accordance with the contract documents and design intents.

    3. All modes and sequences of control operations, interlocks and conditional control responses and specified responses to abnormal emergency conditions.

g. End of Functional Performance Test: Record the date and time of the completion of system commissioning.

h. Field Notes: Provide a copy of the notes and remarks made and documented during system commissioning.

i. List systems modifications, not required by the Contract Documents, but provided by the Contractor. List other questions regarding such system modifications.

j. List problems discovered during Commissioning that were corrected.

k. List problems discovered during Commissioning that were not corrected.

l. List recommended party that should take action on these 'uncorrected' problems.

The CxA for this project shall develop 'Functional Performance Test' (FPT) procedures for this project, which shall be reviewed and approved by the Government; and then provided to, and completed by the Contractor under the supervision of the CxA, to ensure that all equipment and systems are installed properly; have been started up preliminarily, and are ready for commissioning and performance verification testing.

3.5 OPERATIONAL AND MAINTENANCE STAFF TRAINING

System narrative descriptions will be prepared by the CxA and supported by flow diagrams, one line diagrams, and appropriate specification sections for major systems to be commissioned. The CxA will coordinate "system description" meetings with members of facility management and maintenance department groups to review system description documentation. The meetings will provide an overview of major system features, components, and arrangements.

The Contractor and associated manufacturer's representatives shall provide the required training to the Government's operational staff after the system description meetings have occurred. These Contractor training sessions for Government personnel shall provide a more detailed analogy of systems operation and maintenance. Coordinate this training with that required in the technical specification sections.

3.6 DOCUMENTATION

The Contractor shall be responsible for collection of pertinent data during system installation, inspection and checkout; during system start-up; and during functional performance testing. The Contractor shall submit to the CxA documentation of all construction inspections, startup procedures and results, as well as any tests performed prior to and after system start-up. Documentation shall also include the equipment manufacturer's start-up procedures as reviewed and approved by Commissioning Team, including startup reports for equipment and systems conducted by a factory-certified technician or engineer, as specified in the Division 26, 27, and 33 Sections for this project.

Provide a title sheet for each section and list the following:

a. Section Title and Specification Section Name and Number requiring this submittal.

b. Project name, project number, and address.

c. Contractor and subcontractor names, addresses, and phone numbers.

d. Name, title, signature, and date of person making the submittal.

e. Table of Contents for each Section.

f. Name of Command, a blank line for signature, and the name and title of person accepting the submittal, and the date accepted by signature.

g. Name, address, and phone number of CxA. Include a blank line for signature; and date of person accepting the submittal.

Provide a Table of Contents for multiple submittals. List each submittal and page number. Number each page, centered on the bottom in sequential numerical order.

3.6.1 STEP ONE - INSTALLATION VERIFICATION

General Commissioning Responsibilities:

a. Before system start-up begins, the Commissioning Team shall conduct a final installation verification audit. The Contractor shall be responsible for completion of work including change orders and punch list items to the Government's satisfaction. The audit shall include, but not be limited to, checking of:

   1. Provide documentation of all prestart-up tests performed, including manufacturer's factory tests.

   2. Verify integrated performance of all components, including control system components and all interlocks and interactions with other equipment and systems.

   3. Verify all alarm and high and low limit functions and messages generated on all points with alarm settings.

   4. All safety trips shall require a manual reset to allow a system restart.

   5. Verify shut down and restart capabilities both for scheduled and unscheduled events (e.g. power failure recovery and normal scheduled start/stop).

   6. Verify time of day schedules and setpoints.

   7. Verify all energy saving control strategies.

   8. Verify that monitoring system graphics are representative of the systems and that all points and control elements are in the same location on the graphic as they are in the field.

   9. Verify operator control of all commandable control system points including proper security level access.

b. If work is found to be incomplete, incorrect, or non-functional, the Contractor shall correct the deficiencies before system start-up work proceeds.

3.6.2 STEP TWO - SYSTEM START-UP

General Commissioning Responsibilities: With the assistance of the CxA, a start-up plan shall be developed by the Contractor. The start-up plan shall include all electrical equipment. The Contractor shall submit the equipment start-up plan to the Government for approval. Start-up plan shall include the following:

a. The CxA shall review the respective prefunctional checklists to provide guidance and comments for the startup plans.

b. The CxA shall obtain from the Contractor the equipment manufacturer's installation, startup and checkout data, including actual field checkout/startup sheets used by the equipment manufacturer's startup technicians.

c. The CxA shall copy all pages of the equipment manufacturer's installation instructions and startup manuals with important instructional data and procedures from the startup and checkout manuals not covered elsewhere in the manufacturer's equipment installation and checkout sheets.

d. The pages referenced above, along with the respective startup data from the prefunctional checklist provided by the CxA, and the manufacturer's equipment installation checkout sheets become the basis for the equipment "Startup and Checkout Plan" for each individual piece of equipment, developed by the Contractor.

e. For systems that may not have adequate manufacturer startup and checkout procedures, particularly for components being integrated with other equipment, the Contractor shall provide the added necessary detail and documentation to the CxA for information and review, prior to execution.

f. The CxA shall review the individual equipment "Startup and Checkout Plans", compile this information into a "full Startup and Checkout Plan", and then transmit same to the Contractor. The Contractor will designate which trade or subcontractor is responsible to fill out each line item on the prefunctional (construction) checklists from the CxA, and support the startup and checkout of each piece of equipment. The Contractor shall then transmit the full start-up plan to the Subcontractors for their review and use.

3.6.2.1 Thermographic Scanning

a. Contractor shall provide thermographic scanning on all switchboards and distribution panels. In general, the thermographic scanning shall be made when the equipment is energized and is operating at its normal capacity. It is intended that the scan be made after the equipment has been in full operation; however, the Contractor, near the completion of the Project, will determine the exact time of conducting the scan. Some scanning for occupant-created load shall be performed during the Warranty Period as a Deferred Test.

b. Test equipment, miscellaneous tools, and materials shall be transported properly, moved, and set up by trained personnel. Equipment used in testing shall be capable of performing all recommended procedures required by the apparatus and related equipment. All test equipment shall have certification of calibration and be in working order.

c. All hot spots shall be marked, identified, and an infrared thermographic scanning report prepared and furnished to the Owner.

d. The report shall contain infrared photos of trouble spots with temperature readings.

e. The Contractor shall promptly report all sources of heating problems to the Owner for corrective action.

3.6.2.2 Grounding Systems

a. Provide grounding system tests as required in the technical specification sections.

3.6.2.3 AC Motors - General Across Systems

a. Verify proper alignment, installation, and rotation.

b. Measure the insulation resistance, phase balance, and resistance to ground.

c. Verify that properly sized overloads are in place.

d. Measure voltage available to all phases at time of initial connection and again after motor has been placed in operation. Measure current and speed (RPM) under load conditions.

e. Record all motor nameplate data.

3.6.2.4 Primary Service Feeders - 15 kV Class

a. Start-up checklists: Perform the following final checks before Start-up:

1. Inspect underground duct banks.

2. Inspect cable.

3. Inspect splicing and terminations.

b. Starting Procedures: Follow the manufacturer's written procedures and the following as a minimum:

1. Visually and mechanically inspect to include the following: Exposed cable, compression type terminations, splices where approved by the Engineer and the Owner in manholes, cable vaults, and similar items.

2. Correct color code identification and phasing arrangements.

3. Provide inspection and testing as required in Section 33 71 02 UNDERGROUND ELECTRICAL DISTRIBUTION and Section 26 08 00 APPARATUS INSPECTION AND TESTING.

3.6.2.5 Pad-Mounted Transformers

a. Start-up checklists: Perform the following final checks before Start-up:

1. Inspect primary and secondary power connections.

2. Inspect control interconnections.

3. Inspect grounding.

b. Provide inspection, testing and training as required in Section 26 12 19.10 THREE-PHASE PAD-MOUNTED TRANSFORMERS, and Section 26 08 00 APPARATUS INSPECTION AND TESTING.

3.6.2.6 Secondary Distribution

a. Start-up checklists: Perform the following final checks before Start-up:

1. Inspect transformer connections.

2. Inspect disconnect connections.

3. Inspect grounding.

4. Validate surge protector installation.

5. Verify control interconnections.

6. Check calibration/setting of protective devices from system coordination study.

7. Verify calibration/setting of digital metering.

8. Check installation of equipment nameplates and warning labels.

b. Provide inspection, testing and training as required in Section 26 20 00 INTERIOR DISTRIBUTION SYSTEM,Section 26 27 14.00 20 ELECTRICITY METERING, and Section 26 08 00 APPARATUS INSPECTION AND TESTING.

c. Starting Procedures: Follow the manufacturer's written procedures and the following as a minimum:

1. Visually and mechanically inspect to include the following: large junction and pull boxes, supports of raceways, and compression type terminations.

2. Correct identification and phasing arrangements.

3. Perform random continuity test of any branch circuit.

4. Receptacle Polarity Test: Test every receptacle installed or reconnected under this Contract with a receptacle circuit tester. Tester shall test for open ground, reverse polarity, open hot, open neutral, hot and ground reversed, hot or neutral and hot open. Rewire receptacles with faults and retest.

5. Ground-Fault Receptacle Circuit Interrupter Tests:

(a) Test each receptacle or branch circuit breaker having ground-fault circuit protection to assure that the ground-fault circuit interrupter will not operate when subjected to a ground-fault current of less than 4 milliamperes and will operate when subjected to a ground-fault current exceeding 6 milliamperes.

(b) Perform testing using an instrument specifically designed and manufactured for testing ground-fault circuit interrupters. "TEST" button operation will not be acceptable as a substitute for this test.

(c) Replace receptacles that do not shut off power with 6/1000 of an ampere within 1/40th of a second and retest. Submit test report signed by Test Engineer who performed this test.

3.6.2.7 Lighting Fixtures and Lighting Controls

a. Start-up checklists: Perform the following final checks before

Start-up:

1. Ensure all labeling is affixed and accurate.

2. Verify quantity, type and location of fixtures.

3. Verify type and location of switches.

4. Ensure all terminations are tight.

5. Check sensor placement is adequate for required duty.

6. Ensure adequate access is provided to all panels and that documentation of that panel is provided in it.

7. Ensure all circuits for the loads are energized and ready for testing.

b. Starting Procedures: Follow the manufacturer's written procedures and the following as a minimum:

1. Test, calibrate, and set all digital and analog sensing, and actuating devices.

   (a) Calibrate each instrumentation device by making a comparison between the graphic display and the reading at the device, using an instrument traceable to the National Bureau of Standards, which shall be at least twice as accurate as the device to be calibrated (e.g., if field device is +/-0.5 percent accurate, test equipment shall be +/-0.25 percent accurate over same range).

   (b) Record the measured value and displayed value for each device in the Prefunctional Checklist.

   (c) Check each digital control point by making a comparison between the control command at the control panel and the status of the controlled device.

   (d) Check each digital input point by making a comparison of the state of the sensing device and the display.

   (e) Record the results for each device in the Building Automation System Start-up checklist.

2. Verify operation of lighting controls (dimming, photo-control, regular switching).

3. Check loads on all breakers to ensure that the breaker is properly sized.

4. Enter all schedules per occupant's direction.

5. For operator interfaces, verify all elements on the graphics are functional and properly bound to physical devices and/or virtual points and that hot links or page jumps are functional and logical.

6. Output all specified reports for review and approval.

7. Verify the alarm printing and logging is functional and per

requirements.

8. Validate all interfaces with other systems on a point by point basis.

c. Provide inspection, testing and training as required in Section 26 51 00 INTERIOR LIGHTING and Section 26 56 00 EXTERIOR LIGHTING.

3.6.2.8 Lightning Protection

a. Starting Procedures: Follow the manufacturer's written procedures and the following as a minimum:

1. Visually and mechanically inspect to include the following: air terminal mountings, down leads routing/roof penetrations, and grounding.

2. Review UL test certification.

3. Check for receipt of UL master label.

b. Provide inspection and testing as required in Section 26 41 00 LIGHTNING PROTECTION SYSTEM.

3.6.3 STEP THREE - FUNCTIONAL PERFORMANCE TESTING

General Commissioning Responsibilities: Functional Performance Testing begins after operational testing, adjusting, and balancing of the systems have been completed by the Contractor. Ideally, the Commissioning training for Government operators and maintenance personnel, including the description of the systems, as well as the hands-on training sessions will also have been completed.

a. When testing procedures for commissioned equipment are listed in NETA ATS the NETA test procedures shall be part of the testing requirements of this specification. Additional testing procedures may be listed in this specification.

b. For the conditions, sequences and modes tested, the equipment, integral components and related equipment shall respond to varying loads and changing conditions and parameters appropriately as expected, according to the sequences of operation, as specified, according to acceptable operating practice and the manufacturer's performance specifications. Verify equipment operates within tolerances specified in: governing codes, acceptance criteria contained in the construction documents, manufacturer's literature and according to good operating practice.

c. Electrical Controls Sequences: Verify functionality and compliance with the design intent for each individual sequence module in the sequences of operation. Verify proper operation of all control strategies, energy efficiency and self-diagnostics features by stepping through each sequence and documenting equipment and system performance. Test every step in every written sequence and other significant modes, sequences and operational features not mentioned in written sequences; including startup, normal operation, shutdown, scheduled on and off, unoccupied and manual modes, safeties, alarms, over-rides, lockouts and power failure.

d. Systems shall accomplish their intended function and performance.

e. Resetting a manual safety shall result in a stable, safe, and predictable return to normal operation by the system.

f. Safety circuits and permissive control circuits shall function in all possible combinations of selector switch positions (hand, auto, inverter, bypass, etc.).

g. Scheduled Lighting Controls:

1. Apply the applicable common testing requirements and acceptance criteria.

2. Test Methods. Utilize active testing, and trending when available. If able to trend, trend all zones over a week period and follow the trending guidelines in Section 01 91 13.00 22 GENERAL COMMISSIONING REQUIREMENTS FOR CONSTRUCTION.

3. Sampling Strategy. Manually test 20 percent of the zones or at least four. If more than 10 percent or two zones fail, test another 10 percent sample. If the second sample fails the Contractor shall document retesting on all zones on their own using a Commissioning Authority approved form.

h. Occupancy Sensor Lighting Controls:

1. Apply applicable common testing requirements and acceptance criteria.

2. Test all units functions, including sensor sensitivity and time-to-OFF functions and ensure that sensor location is proper and won't be tripped inadvertently by other occupants and movements outdoors, etc.

3. Test Methods: Utilize active test methods.

4. Sampling Strategy. Test 10 percent of the sensors or six, whichever is greater. If more than 10 percent or two sensors fail, test another 10 percent sample. If the second sample fails the Contractor shall document retesting on all units on their own using a Commissioning Authority approved form.

5. Additional Acceptance Criteria. Reasonable sensitivity, no inadvertent trips, lights go off within 15 seconds of design.

i. Emergency Generator System:

1. Apply applicable common testing requirements and acceptance criteria.

2. Test according to NETA ATS section 7.22.1 and NFPA 110 section 5.13.

3. Record all data and results.

4. Include the following tests:

(a) When in enclosed spaces, verify combustion and ventilation air damper functions and pressure drop of exhaust.

(b) Verify fuel oil system, diesel fuel storage tank, and level and low fuel indication alarms.

(c) Verify all alarms, meters, and auxiliaries and interlocks to the BAS.

5. Building Test. Under a cold generator condition, provide full utility power interruption under load and cause emergency power service operation. Include all UPS in this test. Load bank the UPS if necessary during test.

6. Verify all generator functions.

7. Test auto-transfer switch operation under actual voltage drop.

8. Using a power line disturbance monitor, measure the following times: power failure to engine start command, engine start command to engine start (cranking time), engine start to point where generator is at proper volts and frequency and total time from power failure until ATS switches.

9. Verify system reporting & control monitoring point-to-point.

10. Verify that each circuit and equipment served by emergency power, does power up.

11. Step Load Tests:

(a) Test at 0 percent, 25 percent, 50 percent and 100 percent of full load. Measure voltage and frequency and record all gaged engine conditions. The test shall consist of running the engine-generator while connected to the resistive load bank for one hour, and then shutting down for 30 minutes.

(b) Test for multiple generator starts.

(c) Verify all operational data and start-up minimum time interval.

(d) Verify 2-hour full load run utilizing a load bank (building load can serve as part of the load).

(e) Verify all generator-running characteristics.

(f) Verify battery-charging system.

-- End of Section --

THIS PAGE HAS BEEN INTENTIONALLY LEFT BLANK

SECTION 26 12 19.10

THREE-PHASE PAD-MOUNTED TRANSFORMERS
02/12

PART 1 GENERAL

1.1 REFERENCES

The publications listed below form a part of this specification to the extent referenced. The publications are referred to in the text by the basic designation only.

ASTM INTERNATIONAL (ASTM)

ASTM A240/A240M	(2014) Standard Specification for Chromium and Chromium-Nickel Stainless Steel Plate, Sheet, and Strip for Pressure Vessels and for General Applications
ASTM D1535	(2013) Specifying Color by the Munsell System
ASTM D877/D877M	(2013) Standard Test Method for Dielectric Breakdown Voltage of Insulating Liquids Using Disk Electrodes
ASTM D92	(2012b) Standard Test Method for Flash and Fire Points by Cleveland Open Cup Tester
ASTM D97	(2012) Pour Point of Petroleum Products

FM GLOBAL (FM)

FM APP GUIDE	(updated on-line) Approval Guide http://www.approvalguide.com/

INSTITUTE OF ELECTRICAL AND ELECTRONICS ENGINEERS (IEEE)

IEEE 100	(2000; Archived) The Authoritative Dictionary of IEEE Standards Terms
IEEE 386	(2006; INT 1 2011) Standard for Separable Insulated Connector Systems for Power Distribution Systems Above 600V
IEEE C2	(2012; Errata 2012; INT 1-4 2012; INT 5-7 2013) National Electrical Safety Code
IEEE C37.47	(2011) Standard for High Voltage Current-Limiting Type Distribution Class Fuses and Fuse Disconnecting Switches
IEEE C57.12.00	(2010) Standard General Requirements for Liquid-Immersed Distribution, Power, and Regulating Transformers
IEEE C57.12.28	(2005; INT 3 2011) Standard for

	Pad-Mounted Equipment - Enclosure Integrity
IEEE C57.12.34	(2009) Standard for Requirements for Pad-Mounted, Compartmental-Type, Self-Cooled, Three-Phase Distribution Transformers, 5 MVA and Smaller; High Voltage, 34.5 kV Nominal System Voltage and Below; Low Voltage, 15 kV Nominal System Voltage and Below
IEEE C57.12.90	(2010) Standard Test Code for Liquid-Immersed Distribution, Power, and Regulating Transformers
IEEE C57.98	(2011) Guide for Transformer Impulse Tests
IEEE C62.11	(2012) Standard for Metal-Oxide Surge Arresters for Alternating Current Power Circuits (>1kV)

INTERNATIONAL ELECTRICAL TESTING ASSOCIATION (NETA)

NETA ATS	(2013) Standard for Acceptance Testing Specifications for Electrical Power Equipment and Systems

NATIONAL FIRE PROTECTION ASSOCIATION (NFPA)

NFPA 70	(2014; AMD 1 2013; Errata 1 2013; AMD 2 2013; Errata 2 2013; AMD 3 2014; Errata 3-4 2014; AMD 4-6 2014) National Electrical Code

ORGANISATION FOR ECONOMIC CO-OPERATION AND DEVELOPMENT (OECD)

OECD Test 203	(1992) Fish Acute Toxicity Test

U.S. ENVIRONMENTAL PROTECTION AGENCY (EPA)

EPA 712-C-98-075	(1998) Fate, Transport and Transformation Test Guidelines - OPPTS 835.3100- "Aerobic Aquatic Biodegradation"
EPA 821-R-02-012	(2002) Methods for Measuring the Acute Toxicity of Effluents and Receiving Waters to Freshwater and Marine Organisms

U.S. NATIONAL ARCHIVES AND RECORDS ADMINISTRATION (NARA)

10 CFR 431	Energy Efficiency Program for Certain Commercial and Industrial Equipment

UNDERWRITERS LABORATORIES (UL)

UL 467	(2007) Grounding and Bonding Equipment

1.2 RELATED REQUIREMENTS

Section 26 08 00 APPARATUS INSPECTION AND TESTING applies to this section,

with the additions and modifications specified herein.

1.3 DEFINITIONS

Unless otherwise specified or indicated, electrical and electronics terms used in these specifications, and on the drawings, shall be as defined in IEEE 100.

1.4 SUBMITTALS

Government approval is required for submittals with a "G" designation; submittals not having a "G" designation are for Contractor Quality Control approval. The following shall be submitted in accordance with Section 01 33 00 SUBMITTAL PROCEDURES:

SD-02 Shop Drawings

Pad-mounted transformer drawings; G

SD-03 Product Data

Pad-mounted transformers; G

Submittal shall include manufacturer's information for each component, device, insulating fluid, and accessory provided with the transformer.

SD-06 Test Reports

Acceptance checks and tests; G

Submittal shall include acceptance criteria and limits for each test in accordance with NETA ATS "Test Values".

SD-07 Certificates

Transformer Efficiencies; G

Submit certification, including supporting calculations, from the manufacturer indicating conformance with the paragraph entitled "Specified Transformer Efficiencies."

SD-09 Manufacturer's Field Reports

Pad-mounted transformer design tests; G

Pad-mounted transformer routine and other tests; G

SD-10 Operation and Maintenance Data

Transformer(s), Data Package 5; G

Submit operation and maintenance data in accordance with Section 01 78 23 OPERATION AND MAINTENANCE DATA and as specified herein.

SD-11 Closeout Submittals

Transformer test schedule; G

Submit report of test results as specified by paragraph entitled "Field Quality Control."

1.4.1 Reduced Submittal Requirements

Transformers designed and manufactured by ABB in Jefferson City, MO; by Cooper Power Systems in Waukesha, WI; by ERMCO in Dyersburg, TN; or by Howard Industries in Laurel, MS need not submit the entire submittal package requirements of this contract. Instead, the following items shall be submitted:

a. A certification, signed by the manufacturer, stating that the technical requirements of this specification shall be met.

b. An outline drawing of the transformer with devices identified (paragraph entitled "Pad-Mounted Transformer Drawings", item a).

c. ANSI nameplate data of the transformer (paragraph entitled "Pad-Mounted Transformer Drawings", item b).

d. Manufacturer's published time-current curves (properly overlaid on one full size logarithmic paper) of the transformer high side fuses (paragraph entitled "Pad-Mounted Transformer Drawings", item e) with transformer damage curve, inrush curve, and thru fault current indicated.

e. Routine and other tests (in PART 2, see paragraph entitled "Source Quality Control", subparagraph entitled "Routine and Other Tests"), shall be conducted by the manufacturer and may be witnessed by the government. Provide transformer test schedule required by submittal item "SD-11 Closeout Submittals". Provide certified copies of the tests.

f. Provide acceptance test reports required by submittal item "SD-06 Test Reports".

g. Provide operation and maintenance manuals required by submittal item "SD-10 Operation and Maintenance Data".

1.5 QUALITY ASSURANCE

1.5.1 Pad-Mounted Transformer Drawings

Drawings shall indicate, but not be limited to the following:

a. An outline drawing, with front, top, and side views.

b. ANSI nameplate data.

c. Elementary diagrams and wiring diagrams .

d. One-line diagram, including switch(es).

e. Manufacturer's published time-current curves (on full size logarithmic paper) of the transformer high side fuses.

1.5.2 Regulatory Requirements

In each of the publications referred to herein, consider the advisory

provisions to be mandatory, as though the word, "shall" had been substituted for "should" wherever it appears. Interpret references in these publications to the "authority having jurisdiction," or words of similar meaning, to mean the Contracting Officer. Equipment, materials, installation, and workmanship shall be in accordance with the mandatory and advisory provisions of NFPA 70 unless more stringent requirements are specified or indicated.

1.5.3 Standard Products

Provide materials and equipment that are products of manufacturers regularly engaged in the production of such products which are of equal material, design and workmanship. Products shall have been in satisfactory commercial or industrial use for 2 years prior to bid opening. The 2-year period shall include applications of equipment and materials under similar circumstances and of similar size. The product shall have been on sale on the commercial market through advertisements, manufacturers' catalogs, or brochures during the 2-year period. Where two or more items of the same class of equipment are required, these items shall be products of a single manufacturer; however, the component parts of the item need not be the products of the same manufacturer unless stated in this section.

1.5.3.1 Alternative Qualifications

Products having less than a 2-year field service record will be acceptable if a certified record of satisfactory field operation for not less than 6000 hours, exclusive of the manufacturers' factory or laboratory tests, is furnished.

1.5.3.2 Material and Equipment Manufacturing Date

Products manufactured more than 3 years prior to date of delivery to site shall not be used, unless specified otherwise.

1.6 MAINTENANCE

1.6.1 Additions to Operation and Maintenance Data

In addition to requirements of Data Package 5, include the following on the actual transformer(s) provided:

a. An instruction manual with pertinent items and information highlighted

b. An outline drawing, front, top, and side views

c. Prices for spare parts and supply list

d. Routine and field acceptance test reports

e. Fuse curves for primary fuses

f. Actual nameplate diagram

g. Date of purchase

1.7 WARRANTY

The equipment items shall be supported by service organizations which are reasonably convenient to the equipment installation in order to render

satisfactory service to the equipment on a regular and emergency basis during the warranty period of the contract.

PART 2 PRODUCTS

2.1 PRODUCT COORDINATION

Products and materials not considered to be pad-mounted transformers and related accessories are specified in Section 33 71 01 OVERHEAD TRANSMISSION AND DISTRIBUTION, Section 26 20 00 INTERIOR DISTRIBUTION SYSTEM, and Section 33 71 02 UNDERGROUND ELECTRICAL DISTRIBUTION.

2.2 THREE-PHASE PAD-MOUNTED TRANSFORMERS

IEEE C57.12.34, IEEE C57.12.28 and as specified herein.

2.2.1 Compartments

The high- and low-voltage compartments shall be separated by steel isolating barriers extending the full height and depth of the compartments. Compartment doors: hinged lift-off type with stop in open position and three-point latching.

2.2.1.1 High Voltage, Dead-Front

High-voltage compartment shall contain the incoming line, insulated high-voltage load-break connectors, bushing well inserts, six high-voltage bushing wells configured for loop feed application, load-break switch handle(s), access to oil-immersed bayonet fuses, dead-front surge arresters, tap changer handle, connector parking stands,, and ground pad.

a. Insulated high-voltage load-break connectors: IEEE 386, rated 15 kV, 95 kV BIL. Current rating: 200 amperes rms continuous. Short time rating: 10,000 amperes rms symmetrical for a time duration of 0.17 seconds. Connector shall have a steel reinforced hook-stick eye, grounding eye, test point, and arc-quenching contact material.

b. Bushing well inserts: IEEE 386, 200 amperes, 15 kV Class. Provide a bushing well insert for each bushing well unless indicated otherwise.

c. Load-break switch

   Radial-feed oil-immersed type rated at 15 kV, 95 kV BIL, with a continuous current rating and load-break rating of 200 amperes, and a make-and-latch rating of 12,000 rms amperes symmetrical. Locate the switch handle in the high-voltage compartment.

d. Provide bayonet type, oil-immersed, expulsion fuses in series with oil-immersed, partial-range, current-limiting fuses. Bayonet fuse links shall sense both high currents and high oil temperature in order to provide thermal protection to the transformer. Coordinate transformer protection with expulsion fuse clearing low-current faults and current-limiting fuse clearing high-current faults beyond the interrupting rating of the expulsion fuse. In order to eliminate or minimize oil spills, the bayonet fuse assembly shall include an oil retention valve inside the housing which closes when the fuse holder is removed and an external drip shield. Warning shall be conspicuously displayed within the high-voltage compartment cautioning against removing or inserting fuses unless the load-break switch is in the open

position and the tank pressure has been released.

Bayonet fuse assembly: 150 kV BIL.

Oil-immersed current-limiting fuses: IEEE C37.47; 50,000 rms amperes symmetrical interrupting rating at the system voltage specified.

e. Surge arresters: IEEE C62.11, rated 9 kV, fully shielded, dead-front, metal-oxide-varistor, elbow type with resistance-graded gap. Provide three arresters for radial feed circuits.

f. Parking stands: Provide a parking stand near each bushing.

g. Protective caps: IEEE 386, 200 amperes, 15 kV Class. Provide insulated protective caps (not shipping caps) for insulating and sealing out moisture from unused bushings.

2.2.1.2 Low Voltage

Low-voltage compartment shall contain low-voltage bushings with NEMA spade terminals, accessories, metering, stainless steel or laser-etched anodized aluminum diagrammatic transformer nameplate, and ground pad.

a. Accessories shall include drain valve with sampler device, fill plug, pressure relief device, liquid level gage, pressure-vacuum gage, and dial type thermometer with maximum temperature indicator.
b. Metering: Provide as specified in Section 26 27 14.00 20 ELECTRICITY METERING.

2.2.2 Transformer

a. Less-flammable liquid-insulated, two winding, 60 hertz, 65 degrees C rise above a 30 degrees C average ambient, self-cooled type.

b. Transformers shall be rated 150 kVA.

c. Transformer voltage ratings: 12,470 V Delta - 208/120 V GrdY.

d. Tap changer shall be externally operated, manual type for changing tap setting when the transformer is de-energized. Provide four 2.5 percent full capacity taps, two above and two below rated primary voltage. Tap changers shall clearly indicate which tap setting is in use.

e. Minimum tested percent impedance at 85 degrees C shall not be less than the following values:

2.87 for units rated 112.5kVA to 300kVA

f. Audible sound levels shall comply with the following:

kVA	DECIBELS (MAX)
150	55

g. Transformer shall include lifting lugs and provisions for jacking under

base. The transformer base construction shall be suitable for using rollers or skidding in any direction. Provide transformer top with an access handhole. Transformer shall have its kVA rating conspicuously displayed on its enclosure. The transformer shall have an insulated low-voltage neutral bushing with NEMA spade terminal, and with removable ground strap.

2.2.2.1 Specified Transformer Efficiencies

Provide transformer efficiency calculations utilizing the actual no-load and load loss values obtained during the routine tests performed on the actual transformer(s) prepared for this project. No-load losses (NLL) shall be referenced at 20 degrees C. Load losses (LL) shall be referenced at 55 degrees C and at 50 percent of the nameplate load. The transformer is not acceptable if the calculated transformer efficiency is less than the efficiency indicated in the "KVA / Efficiency" table below. That table is based on requirements contained within 10 CFR 431, Subpart K.

kVA	EFFICIENCY (percent)
150	99.08

2.2.3 Insulating Liquid

a. Less-flammable transformer liquids: NFPA 70 and FM APP GUIDE for less-flammable liquids having a fire point not less than 300 degrees C tested per ASTM D92 and a dielectric strength not less than 33 kV tested per ASTM D877/D877M. Provide identification of transformer as "non-PCB" and "manufacturer's name and type of fluid" on the nameplate.

The fluid shall be a biodegradable electrical insulating and cooling liquid classified by UL and approved by FM as "less flammable" fluids. The fluid shall meet the following fluid properties:

1. Pour point: ASTM D97, less than -15 degree C

2. Aquatic biodegradation: EPA 712-C-98-075, 100 percent

3. Trout toxicity: OECD Test 203, zero mortality of EPA 821-R-02-012, pass

2.2.3.1 Liquid-Filled Transformer Nameplates

Distribution transformers shall be provided with nameplate information in accordance with IEEE C57.12.00 and as modified or supplemented by this section.

2.2.4 Corrosion Protection

Bases and cabinets of transformers shall be corrosion resistant and shall be fabricated of stainless steel conforming to ASTM A240/A240M, Type 304 or 304L. Base shall include any part of pad-mounted transformer that is within

3 inches of concrete pad.

Paint entire transformer assembly Munsell 7GY3.29/1.5 green. Paint coating system shall comply with IEEE C57.12.28 regardless of base, cabinet, and tank material. The Munsell color notation is specified in ASTM D1535.

2.3 WARNING SIGNS

Provide warning signs for the enclosures of pad-mounted transformers having a nominal rating exceeding 600 volts.

a. When the enclosure integrity of such equipment is specified to be in accordance with IEEE C57.12.28, such as for pad-mounted transformers, provide self-adhesive warning signs on the outside of the high voltage compartment door(s). Sign shall be a decal and shall have nominal dimensions of 7 by 10 inches with the legend "DANGER HIGH VOLTAGE" printed in two lines of nominal 2 inch high letters. The word "DANGER" shall be in white letters on a red background and the words "HIGH VOLTAGE" shall be in black letters on a white background. Decal shall be Panduit No. PPSO710D72 or approved equal.

2.4 Arc Flash Warning Label

Provide warning label for the enclosure of pad-mounted transformers. Locate this self-adhesive warning label on the outside of the high voltage compartment door warning of potential electrical arc flash hazards and appropriate PPE required. The label format shall be as indicated.

2.5 GROUNDING AND BONDING

UL 467. Provide grounding and bonding as specified in Section 33 71 02 UNDERGROUND ELECTRICAL DISTRIBUTION.

2.6 CAST-IN-PLACE CONCRETE

Concrete associated with electrical work for other than encasement of underground ducts shall be 4000 psi minimum 28-day compressive strength unless specified otherwise. All concrete shall conform to the requirements of Section 03 30 00 CAST-IN-PLACE CONCRETE.

2.7 SOURCE QUALITY CONTROL

2.7.1 Transformer Test Schedule

The Government reserves the right to witness tests. Provide transformer test schedule for tests to be performed at the manufacturer's test facility. Submit required test schedule and location, and notify the Contracting Officer 30 calendar days before scheduled test date. Notify Contracting Officer 15 calendar days in advance of changes to scheduled date.

a. Test Instrument Calibration

1. The manufacturer shall have a calibration program which assures that all applicable test instruments are maintained within rated accuracy.

2. The accuracy shall be directly traceable to the National Institute of Standards and Technology.

3. Instrument calibration frequency schedule shall not exceed 12 months for both test floor instruments and leased specialty equipment.

4. Dated calibration labels shall be visible on all test equipment.

5. Calibrating standard shall be of higher accuracy than that of the instrument tested.

6. Keep up-to-date records that indicate dates and test results of instruments calibrated or tested. For instruments calibrated by the manufacturer on a routine basis, in lieu of third party calibration, include the following:

   (a) Maintain up-to-date instrument calibration instructions and procedures for each test instrument.

   (b) Identify the third party/laboratory calibrated instrument to verify that calibrating standard is met.

2.7.2 Design Tests

IEEE C57.12.00 states that "design tests are made only on representative apparatus to substantiate the ratings assigned to all other apparatus of basically the same design." Submit design test reports (complete with test data, explanations, formulas, and results), in the same submittal package as the catalog data and drawings for each of the specified transformer(s). Design tests shall have been performed in accordance with IEEE C57.12.90 prior to the award of this contract.

a. Tests shall be certified and signed by a registered professional engineer.

b. Temperature rise: "Basically the same design" for the temperature rise test means a pad-mounted transformer with the same coil construction (such as wire wound primary and sheet wound secondary), the same kVA, the same cooling type (ONAN), the same temperature rise rating, and the same insulating liquid as the transformer specified.

c. Lightning impulse: "Basically the same design" for the lightning impulse dielectric test means a pad-mounted transformer with the same BIL, the same coil construction (such as wire wound primary and sheet wound secondary), and a tap changer, if specified. Design lightning impulse tests shall include the primary windings only of that transformer.

   1. IEEE C57.12.90, paragraph 10.3 entitled "Lightning Impulse Test Procedures," and IEEE C57.98.

   2. State test voltage levels.

   3. Provide photographs of oscilloscope display waveforms or plots of digitized waveforms with test report.

d. Lifting and moving devices: "Basically the same design" requirement for the lifting and moving devices test means a test report confirming that the lifting device being used is capable of handling the weight of the specified transformer in accordance with IEEE C57.12.34.

e. Pressure: "Basically the same design" for the pressure test means a pad-mounted transformer with a tank volume within 30 percent of the tank volume of the transformer specified.

f. Short circuit: "Basically the same design" for the short circuit test means a pad-mounted transformer with the same kVA as the transformer specified.

2.7.3 Routine and Other Tests

IEEE C57.12.00. Routine and other tests shall be performed in accordance with IEEE C57.12.90 by the manufacturer on each of the actual transformer(s) prepared for this project to ensure that the design performance is maintained in production. Submit test reports, by serial number and receive approval before delivery of equipment to the project site. Required tests and testing sequence shall be as follows:

a. Phase relation

b. Ratio

c. No-load losses (NLL) and excitation current

d. Load losses (LL) and impedance voltage

e. Dielectric

1. Impulse

2. Applied voltage

3. Induced voltage

f. Leak

PART 3 EXECUTION

3.1 INSTALLATION

Electrical installations shall conform to IEEE C2, NFPA 70, and to the requirements specified herein. Provide new equipment and materials unless indicated or specified otherwise.

3.2 GROUNDING

NFPA 70 and IEEE C2, except that grounding systems shall have a resistance to solid earth ground not exceeding 5 ohms.

3.2.1 Grounding Electrodes

Provide driven ground rods as specified in Section 33 71 02 UNDERGROUND ELECTRICAL DISTRIBUTION. Connect ground conductors to the upper end of ground rods by exothermic weld or compression connector. Provide compression connectors at equipment end of ground conductors.

3.2.2 Pad-Mounted Transformer Grounding

Provide separate copper grounding conductors and connect them to the ground

loop as indicated. When work in addition to that indicated or specified is required to obtain the specified ground resistance, the provision of the contract covering "Changes" shall apply.

3.2.3 Connections

Make joints in grounding conductors and loops by exothermic weld or compression connector. Exothermic welds and compression connectors shall be installed as specified in Section 33 71 02 UNDERGROUND ELECTRICAL DISTRIBUTION.

3.2.4 Grounding and Bonding Equipment

UL 467, except as indicated or specified otherwise.

3.3 INSTALLATION OF EQUIPMENT AND ASSEMBLIES

Install and connect pad-mounted transformers furnished under this section as indicated on project drawings, the approved shop drawings, and as specified herein.

3.4 FIELD APPLIED PAINTING

Where field painting of enclosures is required to correct damage to the manufacturer's factory applied coatings, provide manufacturer's recommended coatings and apply in accordance with manufacturer's instructions.

3.5 FOUNDATION FOR EQUIPMENT AND ASSEMBLIES

Mount transformer on concrete slab. Unless otherwise indicated, the slab shall be at least 8 inches thick, reinforced with a 6 by 6 - W2.9 by W2.9 mesh, placed uniformly 4 inches from the top of the slab. Slab shall be placed on a 6 inch thick, well-compacted gravel base. Top of concrete slab shall be approximately 4 inches above finished grade with gradual slope for drainage. Edges above grade shall have 1/2 inch chamfer. Slab shall be of adequate size to project at least 8 inches beyond the equipment.

Stub up conduits, with bushings, 2 inches into cable wells in the concrete pad. Coordinate dimensions of cable wells with transformer cable training areas.

3.5.1 Cast-In-Place Concrete

Cast-in-place concrete work shall conform to the requirements of Section 03 30 00 CAST-IN-PLACE CONCRETE.

3.6 FIELD QUALITY CONTROL

3.6.1 Performance of Acceptance Checks and Tests

Perform in accordance with the manufacturer's recommendations and include the following visual and mechanical inspections and electrical tests, performed in accordance with NETA ATS.

3.6.1.1 Pad-Mounted Transformers

a. Visual and mechanical inspection

1. Compare equipment nameplate data with specifications and approved

shop drawings.

2. Inspect physical and mechanical condition. Check for damaged or cracked insulators and leaks.

3. Inspect anchorage, alignment, and grounding.

4. Verify the presence of PCB content labeling.

5. Verify the bushings and transformer interiors are clean.

6. Inspect all bolted electrical connections for high resistance using low-resistance ohmmeter, verifying tightness of accessible bolted electrical connections by calibrated torque-wrench method, or performing thermographic survey.

7. Verify correct liquid level in tanks and bushings.

8. Verify that positive pressure is maintained on gas-blanketed transformers.

9. Perform specific inspections and mechanical tests as recommended by manufacturer.

10. Verify de-energized tap changer position is left as specified.

11. Verify the presence of transformer surge arresters.

b. Electrical tests

1. Perform resistance measurements through all bolted connections with low-resistance ohmmeter.

2. Verify proper secondary voltage phase-to-phase and phase-to-neutral after energization and prior to loading.

3.6.1.2 Grounding System

a. Visual and mechanical inspection

1. Inspect ground system for compliance with contract plans and specifications.

b. Electrical tests

1. Perform ground-impedance measurements utilizing the fall-of-potential method. On systems consisting of interconnected ground rods, perform tests after interconnections are complete. On systems consisting of a single ground rod perform tests before any wire is connected. Take measurements in normally dry weather, not less than 48 hours after rainfall. Use a portable ground testing megger in accordance with manufacturer's instructions to test each ground or group of grounds. The instrument shall be equipped with a meter reading directly in ohms or fractions thereof to indicate the ground value of the ground rod or grounding systems under test.

2. Submit the measured ground resistance of each ground rod and grounding system, indicating the location of the rod and grounding

system. Include the test method and test setup (i.e., pin location) used to determine ground resistance and soil conditions at the time the measurements were made.

3.6.1.3 Surge Arresters, Medium- and High-Voltage

a. Visual and mechanical inspection

1. Compare equipment nameplate data with specifications and approved shop drawings.

2. Inspect physical and mechanical condition.

3. Inspect anchorage, alignment, grounding, and clearances.

4. Verify the arresters are clean.

5. Inspect all bolted electrical connections for high resistance using low-resistance ohmmeter, verifying tightness of accessible bolted electrical connections by calibrated torque-wrench method, or performing thermographic survey.

6. Verify that the ground lead on each device is individually attached to a ground bus or ground electrode.

b. Electrical tests

1. Perform resistance measurements through all bolted connections with low-resistance ohmmeter, if applicable.

2. Perform an insulation-resistance test on each arrester, phase terminal-to-ground.

3. Test grounding connection.

3.6.2 Follow-Up Verification

Upon completion of acceptance checks and tests, the Contractor shall show by demonstration in service that circuits and devices are in good operating condition and properly performing the intended function. As an exception to requirements stated elsewhere in the contract, the Contracting Officer shall be given 5 working days advance notice of the dates and times of checking and testing.

-- End of Section --

SECTION 26 20 00

INTERIOR DISTRIBUTION SYSTEM
02/14

PART 1 GENERAL

1.1 REFERENCES

The publications listed below form a part of this specification to the extent referenced. The publications are referred to in the text by the basic designation only.

ASTM INTERNATIONAL (ASTM)

ASTM B1	(2013) Standard Specification for Hard-Drawn Copper Wire
ASTM B8	(2011) Standard Specification for Concentric-Lay-Stranded Copper Conductors, Hard, Medium-Hard, or Soft
ASTM D709	(2013) Laminated Thermosetting Materials

INSTITUTE OF ELECTRICAL AND ELECTRONICS ENGINEERS (IEEE)

IEEE 100	(2000; Archived) The Authoritative Dictionary of IEEE Standards Terms
IEEE 81	(2012) Guide for Measuring Earth Resistivity, Ground Impedance, and Earth Surface Potentials of a Ground System
IEEE C2	(2012; Errata 2012; INT 1-4 2012; INT 5-7 2013) National Electrical Safety Code

NATIONAL ELECTRICAL MANUFACTURERS ASSOCIATION (NEMA)

ANSI C80.1	(2005) American National Standard for Electrical Rigid Steel Conduit (ERSC)
ANSI C80.3	(2005) American National Standard for Electrical Metallic Tubing (EMT)
NEMA 250	(2008) Enclosures for Electrical Equipment (1000 Volts Maximum)
NEMA FU 1	(2012) Low Voltage Cartridge Fuses
NEMA ICS 1	(2000; R 2008; E 2010) Standard for Industrial Control and Systems: General Requirements
NEMA ICS 2	(2000; R 2005; Errata 2008) Standard for Controllers, Contactors, and Overload Relays Rated 600 V
NEMA ICS 4	(2010) Terminal Blocks

NEMA ICS 6	(1993; R 2011) Enclosures
NEMA KS 1	(2001; R 2006) Enclosed and Miscellaneous Distribution Equipment Switches (600 V Maximum)
NEMA MG 1	(2011; Errata 2012) Motors and Generators
NEMA MG 10	(2001; R 2007) Energy Management Guide for Selection and Use of Fixed Frequency Medium AC Squirrel-Cage Polyphase Induction Motors
NEMA MG 11	(1977; R 2012) Energy Management Guide for Selection and Use of Single Phase Motors
NEMA RN 1	(2005; R 2013) Polyvinyl-Chloride (PVC) Externally Coated Galvanized Rigid Steel Conduit and Intermediate Metal Conduit
NEMA TC 2	(2013) Standard for Electrical Polyvinyl Chloride (PVC) Conduit
NEMA TC 3	(2013) Standard for Polyvinyl Chloride (PVC) Fittings for Use With Rigid PVC Conduit and Tubing
NEMA VE 1	(2009) Standard for Metal Cable Tray Systems
NEMA WD 1	(1999; R 2005; R 2010) Standard for General Color Requirements for Wiring Devices
NEMA WD 6	(2012) Wiring Devices Dimensions Specifications
NEMA Z535.4	(2011) American National Standard for Product Safety Signs and Labels

NATIONAL FIRE PROTECTION ASSOCIATION (NFPA)

NFPA 70	(2014; AMD 1 2013; Errata 1 2013; AMD 2 2013; Errata 2 2013; AMD 3 2014; Errata 3-4 2014; AMD 4-6 2014) National Electrical Code
NFPA 70E	(2012; Errata 2012) Standard for Electrical Safety in the Workplace
NFPA 780	(2014) Standard for the Installation of Lightning Protection Systems

TELECOMMUNICATIONS INDUSTRY ASSOCIATION (TIA)

TIA-568-C.1	(2009; Add 2 2011; Add 1 2012) Commercial Building Telecommunications Cabling Standard

TIA-569	(2012c; Addendum 1 2013; Errata 2013) Commercial Building Standard for Telecommunications Pathways and Spaces
TIA-607	(2011b) Generic Telecommunications Bonding and Grounding (Earthing) for Customer Premises

U.S. NATIONAL ARCHIVES AND RECORDS ADMINISTRATION (NARA)

29 CFR 1910.147	Control of Hazardous Energy (Lock Out/Tag Out)

UNDERWRITERS LABORATORIES (UL)

UL 1	(2005; Reprint Jul 2012) Standard for Flexible Metal Conduit
UL 1063	(2006; Reprint Jul 2012) Machine-Tool Wires and Cables
UL 1242	(2006; Reprint Jul 2012) Standard for Electrical Intermediate Metal Conduit -- Steel
UL 1283	(2005; Reprint Feb 2013) Electromagnetic Interference Filters
UL 1449	(2014) Surge Protective Devices
UL 198M	(2003; Reprint Feb 2013) Standard for Mine-Duty Fuses
UL 20	(2010; Reprint Feb 2012) General-Use Snap Switches
UL 360	(2013; Reprint May 2013) Liquid-Tight Flexible Steel Conduit
UL 4248-1	(2007; Reprint Oct 2013) UL Standard for Safety Fuseholders - Part 1: General Requirements
UL 4248-12	(2007; Reprint Dec 2012) UL Standard for Safety Fuseholders - Part 12: Class R
UL 44	(2010) Thermoset-Insulated Wires and Cables
UL 467	(2007) Grounding and Bonding Equipment
UL 486A-486B	(2013; Reprint Dec 2013) Wire Connectors
UL 486C	(2013; Reprint Dec 2013) Splicing Wire Connectors
UL 489	(2013; Reprint Mar 2014) Molded-Case Circuit Breakers, Molded-Case Switches, and Circuit-Breaker Enclosures

UL 498	(2012; Reprint Aug 2013) Attachment Plugs and Receptacles
UL 50	(2007; Reprint Apr 2012) Enclosures for Electrical Equipment, Non-environmental Considerations
UL 506	(2008; Reprint Oct 2013) Specialty Transformers
UL 508	(1999; Reprint Oct 2013) Industrial Control Equipment
UL 510	(2005; Reprint Jul 2013) Polyvinyl Chloride, Polyethylene and Rubber Insulating Tape
UL 514A	(2013) Metallic Outlet Boxes
UL 514B	(2012) Conduit, Tubing and Cable Fittings
UL 514C	(2014) Nonmetallic Outlet Boxes, Flush-Device Boxes, and Covers
UL 6	(2007; reprint Nov 2010) Electrical Rigid Metal Conduit-Steel
UL 651	(2011; Reprint Mar 2012) Standard for Schedule 40 and 80 Rigid PVC Conduit and Fittings
UL 67	(2009; Reprint Jan 2013) Standard for Panelboards
UL 797	(2007; Reprint Dec 2012) Electrical Metallic Tubing -- Steel
UL 83	(2014) Thermoplastic-Insulated Wires and Cables
UL 854	(2004; Reprint Sep 2011) Standard for Service-Entrance Cables
UL 869A	(2006) Reference Standard for Service Equipment
UL 943	(2006; Reprint Jun 2012) Ground-Fault Circuit-Interrupters
UL 984	(1996; Reprint Sep 2005) Hermetic Refrigerant Motor-Compressors

1.2 DEFINITIONS

Unless otherwise specified or indicated, electrical and electronics terms used in these specifications, and on the drawings, are as defined in IEEE 100.

1.3 SUBMITTALS

Government approval is required for submittals with a "G" designation; submittals not having a "G" designation are for Contractor Quality Control approval. Submit in accordance with Section 01 33 00 SUBMITTAL PROCEDURES:

SD-02 Shop Drawings

Panelboards; G

Cable trays; G

Include wiring diagrams and installation details of equipment indicating proposed location, layout and arrangement, control panels, accessories, piping, ductwork, and other items that must be shown to ensure a coordinated installation. Identify circuit terminals on wiring diagrams and indicate the internal wiring for each item of equipment and the interconnection between each item of equipment. Indicate on the drawings adequate clearance for operation, maintenance, and replacement of operating equipment devices.

Marking strips drawings

SD-03 Product Data

Receptacles; G

Circuit breakers; G

Switches; G

Motor controllers; G

Manual motor starters; G

Telecommunications Grounding Busbar; G

Surge protective devices; G

Include performance and characteristic curves.

SD-06 Test Reports

600-volt wiring test; G

Grounding system test; G

Ground-fault receptacle test; G

SD-07 Certificates

Fuses; G

SD-09 Manufacturer's Field Reports

1.4 QUALITY ASSURANCE

1.4.1 Fuses

Submit coordination data as specified in paragraph, FUSES of this section.

1.4.2 Regulatory Requirements

In each of the publications referred to herein, consider the advisory provisions to be mandatory, as though the word, "shall" or "must" had been substituted for "should" wherever it appears. Interpret references in these publications to the "authority having jurisdiction," or words of similar meaning, to mean the Contracting Officer. Provide equipment, materials, installation, and workmanship in accordance with the mandatory and advisory provisions of NFPA 70 unless more stringent requirements are specified or indicated.

1.4.3 Standard Products

Provide materials and equipment that are products of manufacturers regularly engaged in the production of such products which are of equal material, design and workmanship and:

a. Have been in satisfactory commercial or industrial use for 2 years prior to bid opening including applications of equipment and materials under similar circumstances and of similar size.

b. Have been on sale on the commercial market through advertisements, manufacturers' catalogs, or brochures during the 2-year period.

c. Where two or more items of the same class of equipment are required, provide products of a single manufacturer; however, the component parts of the item need not be the products of the same manufacturer unless stated in this section.

1.4.3.1 Alternative Qualifications

Products having less than a 2-year field service record will be acceptable if a certified record of satisfactory field operation for not less than 6000 hours, exclusive of the manufacturers' factory or laboratory tests, is furnished.

1.4.3.2 Material and Equipment Manufacturing Date

Products manufactured more than 3 years prior to date of delivery to site are not acceptable.

1.5 WARRANTY

Provide equipment items supported by service organizations that are reasonably convenient to the equipment installation in order to render satisfactory service to the equipment on a regular and emergency basis during the warranty period of the contract.

PART 2 PRODUCTS

2.1 MATERIALS AND EQUIPMENT

As a minimum, meet requirements of UL, where UL standards are established

for those items, and requirements of NFPA 70 for all materials, equipment, and devices.

2.2 CONDUIT AND FITTINGS

Conform to the following:

2.2.1 Rigid Metallic Conduit

2.2.1.1 Rigid, Threaded Zinc-Coated Steel Conduit

ANSI C80.1, UL 6.

2.2.2 Rigid Nonmetallic Conduit

PVC Type EPC-40 in accordance with NEMA TC 2,UL 651.

2.2.3 Intermediate Metal Conduit (IMC)

UL 1242, zinc-coated steel only.

2.2.4 Electrical, Zinc-Coated Steel Metallic Tubing (EMT)

UL 797, ANSI C80.3.

2.2.5 Plastic-Coated Rigid Steel and IMC Conduit

NEMA RN 1, Type 40(40 mils thick).

2.2.6 Flexible Metal Conduit

UL 1.

2.2.6.1 Liquid-Tight Flexible Metal Conduit, Steel

UL 360.

2.2.7 Fittings for Metal Conduit, EMT, and Flexible Metal Conduit

UL 514B. Ferrous fittings: cadmium- or zinc-coated in accordance with UL 514B.

2.2.7.1 Fittings for Rigid Metal Conduit and IMC

Threaded-type. Split couplings unacceptable.

2.2.7.2 Fittings for EMT

Steelcompression type.

2.2.8 Fittings for Rigid Nonmetallic Conduit

NEMA TC 3 for PVC, and UL 514B.

2.3 CABLE TRAYS

NEMA VE 1. Provide the following:

a. Cable trays: form a wireway system, with a nominal 6 inch depth.

b. Cable trays: constructed of aluminum.

c. Cable trays: include splice and end plates, dropouts, and miscellaneous hardware.

d. Edges, fittings, and hardware: finished free from burrs and sharp edges.

e. Fittings: ensure not less than load-carrying ability of straight tray sections and have manufacturer's minimum standard radius.

f. Radius of bends 24 inches.2.3.1 Basket-Type Cable Trays

Provide of nominal 18, inch width and 4 inch depth with maximum wire mesh spacing of 2 by 4 inch.

2.3.2 Ladder-Type Cable Trays

Provide of nominal 18 inch width with maximum rung spacing of 9 inches.

2.3.3 Cantilever

Cantilever-type, center-hung cable trays are not permitted.

2.4 OPEN TELECOMMUNICATIONS CABLE SUPPORT

2.4.1 Open Top Cable Supports

Open top cable supports are not permitted.

2.4.2 Closed Ring Cable Supports

Closed ring cable supports are not permitted.

2.5 OUTLET BOXES AND COVERS

UL 514A, cadmium- or zinc-coated, if ferrous metal. UL 514C, if nonmetallic.

2.5.1 Floor Outlet Boxes

Provide the following:

a. Boxes: nonadjustable and concrete tight.

b. Each outlet: consisting of nonmetallic body with threaded openings, for conduits, adjustable ring, and cover plate with 1 1/4 inch threaded plug.

c. Telecommunications outlets: consisting of flush, aluminum or stainless steel housing with a receptacle as specified and 1 inch bushed side opening.

d. Receptacle outlets: consisting of flush aluminum or stainless steel housing with quadruplex-type receptacle as specified herein.

e. Provide gaskets where necessary to ensure watertight installation.

2.5.2 Outlet Boxes for Telecommunications System

Provide the following:

a. Standard type 5 inches square by 2 7/8 inches deep.

b. Depth of boxes: large enough to allow manufacturers' recommended conductor bend radii.

2.6 CABINETS, JUNCTION BOXES, AND PULL BOXES

Volume greater than 100 cubic inches, UL 50, hot-dip, zinc-coated, if sheet steel.

2.7 WIRES AND CABLES

Provide wires and cables in accordance applicable requirements of NFPA 70 and UL for type of insulation, jacket, and conductor specified or indicated. Do not use wires and cables manufactured more than 12 months prior to date of delivery to site.

2.7.1 Conductors

Provide the following:

a. Conductor sizes and capacities shown are based on copper, unless indicated otherwise.

b. Conductors No. 8 AWG and larger diameter: stranded.

c. Conductors No. 10 AWG and smaller diameter: solid.

d. Conductors for remote control, alarm, and signal circuits, classes 1, 2, and 3: stranded unless specifically indicated otherwise.

e. All conductors: copper.2.7.1.1 Minimum Conductor Sizes

Provide minimum conductor size in accordance with the following:

a. Branch circuits: No. 12 AWG.

b. Class 1 remote-control and signal circuits: No. 14 AWG.

c. Class 2 low-energy, remote-control and signal circuits: No. 16 AWG.

d. Class 3 low-energy, remote-control, alarm and signal circuits: No. 22 AWG.

2.7.2 Color Coding

Provide color coding for service, feeder, branch, control, and signaling circuit conductors.

2.7.2.1 Ground and Neutral Conductors

Provide color coding of ground and neutral conductors as follows:

a. Grounding conductors: Green.

b. Neutral conductors: White.

c. Exception, where neutrals of more than one system are installed in same raceway or box, other neutrals color coding: white with a different colored (not green) stripe for each.

2.7.2.2 Ungrounded Conductors

Provide color coding of ungrounded conductors in different voltage systems as follows:

a. 208/120 volt, three-phase

(1) Phase A - black

(2) Phase B - red

(3) Phase C - blue

2.7.3 Insulation

Unless specified or indicated otherwise or required by NFPA 70, provide power and lighting wires rated for 600-volts, Type THWN/THHN conforming to UL 83, except that grounding wire may be type TW conforming to UL 83; remote-control and signal circuits: Type TW or TF, conforming to UL 83. Where lighting fixtures require 90-degree Centigrade (C) conductors, provide only conductors with 90-degree C insulation or better.

2.7.4 Bonding Conductors

ASTM B1, solid bare copper wire for sizes No. 8 AWG and smaller diameter; ASTM B8, Class B, stranded bare copper wire for sizes No. 6 AWG and larger diameter.

2.7.4.1 Telecommunications Bonding Backbone (TBB)

Provide a copper conductor TBB in accordance with TIA-607 with No. 6 AWG minimum size, and sized at 2 kcmil per linear foot of conductor length up to a maximum size of 3/0 AWG. Provide insulated TBB with insulation as specified in the paragraph INSULATION and meeting the fire ratings of its pathway.

2.7.4.2 Bonding Conductor for Telecommunications

Provide a copper conductor Bonding Conductor for Telecommunications between the telecommunications main grounding busbar (TMGB) and the electrical service ground in accordance with TIA-607. Size the bonding conductor for telecommunications the same as the TBB.

2.7.5 Service Entrance Cables

Underground Service Entrance (USE) Cables, UL 854.

2.8 SPLICES AND TERMINATION COMPONENTS

UL 486A-486B for wire connectors and UL 510 for insulating tapes. Connectors for No. 10 AWG and smaller diameter wires: insulated, pressure-type in accordance with UL 486A-486B or UL 486C (twist-on splicing

connector). Provide solderless terminal lugs on stranded conductors.

2.9 DEVICE PLATES

Provide the following:

a. UL listed, one-piece device plates for outlets to suit the devices installed.

b. For metal outlet boxes, plates on unfinished walls: zinc-coated sheet steel or cast metal having round or beveled edges.

c. For nonmetallic boxes and fittings, other suitable plates may be provided.

d. Plates on finished walls: nylon or lexan, minimum 0.03 inch wall thickness and same color as receptacle or toggle switch with which they are mounted.e. Screws: machine-type with countersunk heads in color to match finish of plate.

f. Sectional type device plates are not be permitted.

g. Plates installed in wet locations: gasketed and UL listed for "wet locations."

2.10 SWITCHES

2.10.1 Toggle Switches

NEMA WD 1, UL 20, single pole and three-way, totally enclosed with bodies of thermoplastic or thermoset plastic and mounting strap with grounding screw. Include the following:

a. Handles: ivory thermoplastic.

b. Wiring terminals: screw-type, side-wired.

c. Contacts: silver-cadmium and contact arm - one-piece copper alloy.

d. Switches: rated quiet-type ac only, 120/277 volts, with current rating and number of poles indicated.

2.10.2 Switch with Red Pilot Handle

NEMA WD 1. Provide the following:

a. Pilot lights that are integrally constructed as a part of the switch's handle.

b. Pilot light color: red and illuminate whenever the switch is closed or "on".

c. Pilot lighted switch: rated 20 amps and 120 volts or 277 volts as indicated.

d. The circuit's neutral conductor to each switch with a pilot light.

2.10.3 Breakers Used as Switches

For 120- and 277-Volt fluorescent fixtures, mark breakers "SWD" in accordance with UL 489.

2.10.4 Disconnect Switches

NEMA KS 1. Provide heavy duty-type switches where indicated, where switches are rated higher than 240 volts, and for double-throw switches. Utilize Class R fuseholders and fuses for fused switches, unless indicated otherwise. Provide horsepower rated for switches serving as the motor-disconnect means. Provide switches in NEMA 1 or 3R , enclosure as indicated per NEMA ICS 6.

2.11 FUSES

NEMA FU 1. Provide complete set of fuses for each fusible switch. Coordinate time-current characteristics curves of fuses serving motors or connected in series with circuit breakers or other circuit protective devices for proper operation. Submit coordination data for approval. Provide fuses with a voltage rating not less than circuit voltage.

2.11.1 Fuseholders

Provide in accordance with UL 4248-1.

2.11.2 Cartridge Fuses, Current Limiting Type (Class R)

UL 198M, Class RK-1, RK-5, and time-delay type. Provide only Class R associated fuseholders in accordance with UL 4248-12.

2.12 RECEPTACLES

Provide the following:

a. UL 498, hard use (also designated heavy-duty), grounding-type.

b. Ratings and configurations: as indicated.

c. Bodies: ivory as per NEMA WD 1.

d. Face and body: thermoplastic supported on a metal mounting strap.

e. Dimensional requirements: per NEMA WD 6.

f. Screw-type, side-wired wiring terminals or of the solderless pressure type having suitable conductor-release arrangement.

g. Grounding pole connected to mounting strap.

h. The receptacle: containing triple-wipe power contacts and double or triple-wipe ground contacts.

2.12.1 Weatherproof Receptacles

Provide receptacles, UL listed for use in "wet locations". Include cast metal box with gasketed, hinged, lockable and weatherproof while-in-use, die-cast metal/aluminum cover plate.

2.12.2 Ground-Fault Circuit Interrupter Receptacles

UL 943, duplex type for mounting in standard outlet box. Provide device capable of detecting current leak of 6 milliamperes or greater and tripping per requirements of UL 943 for Class A ground-fault circuit interrupter devices. Provide screw-type, side-wired wiring terminals or pre-wired (pigtail) leads.

2.13 PANELBOARDS

Provide panelboards in accordance with the following:

a. UL 67 and UL 50 having a short-circuit current rating as indicated.

b. Panelboards for use as service disconnecting means: additionally conform to UL 869A.

c. Panelboards: circuit breaker-equipped.

d. Designed such that individual breakers can be removed without disturbing adjacent units or without loosening or removing supplemental insulation supplied as means of obtaining clearances as required by UL.

e. "Specific breaker placement" is required in panelboards to match the breaker placement indicated in the panelboard schedule on the drawings.

f. Use of "Subfeed Breakers" is not acceptable unless specifically indicated otherwise.

g. Main breaker: "separately" mounted "above" or "below" branch breakers.

h. Where "space only" is indicated, make provisions for future installation of breakers.

i. Directories: indicate load served by each circuit in panelboard.

j. Directories: indicate source of service to panelboard (e.g., Panel PA served from Panel MDP).

k. Type directories and mount in holder behind transparent protective covering.

l. Panelboards: listed and labeled for their intended use.

m. Panelboard nameplates: provided in accordance with paragraph FIELD FABRICATED NAMEPLATES.

2.13.1 Enclosure

Provide panelboard enclosure in accordance with the following:

a. UL 50.

b. Cabinets mounted outdoors or flush-mounted: hot-dipped galvanized after fabrication.

c. Cabinets: painted in accordance with paragraph PAINTING.

d. Outdoor cabinets: NEMA 3R raintight with conduit hubs welded to the cabinet.

e. Front edges of cabinets: form-flanged or fitted with structural shapes welded or riveted to the sheet steel, for supporting the panelboard front.

f. All cabinets: fabricated such that no part of any surface on the finished cabinet deviates from a true plane by more than 1/8 inch.

g. Holes: provided in the back of indoor surface-mounted cabinets, with outside spacers and inside stiffeners, for mounting the cabinets with a 1/2 inch clear space between the back of the cabinet and the wall surface.

h. Flush doors: mounted on hinges that expose only the hinge roll to view when the door is closed.

i. Each door: fitted with a combined catch and lock, except that doors over 24 inches long provided with a three-point latch having a knob with a T-handle, and a cylinder lock.

j. Keys: two provided with each lock, with all locks keyed alike.

k. Finished-head cap screws: provided for mounting the panelboard fronts on the cabinets.

2.13.2 Panelboard Buses

Support bus bars on bases independent of circuit breakers. Design main buses and back pans so that breakers may be changed without machining, drilling, or tapping. Provide isolated neutral bus in each panel for connection of circuit neutral conductors. Provide separate ground bus identified as equipment grounding bus per UL 67 for connecting grounding conductors; bond to steel cabinet.

2.13.2.1 Panelboard Neutrals for Non-Linear Loads

Provide in accordance with the following:.

a. UL listed, with panelboard type specifically UL heat rise tested for use on non-linear loads.

b. Panelboard: heat rise tested in accordance with UL 67, except with the neutral assembly installed and carrying 200 percent of the phase bus current during testing.

c. Verification of the testing procedure: provided upon request.

d. Two neutral assemblies paralleled together with cable is not acceptable.

e. Nameplates for panelboard rated for use on non-linear loads: marked "SUITABLE FOR NON-LINEAR LOADS" and in accordance with paragraph FIELD FABRICATED NAMEPLATES.

f. Provide a neutral label with instructions for wiring the neutral of panelboards rated for use on non-linear loads.

2.13.3 Circuit Breakers

UL 489, thermal magnetic-type having a minimum short-circuit current rating equal to the short-circuit current rating of the panelboard in which the circuit breaker will be mounted. Breaker terminals: UL listed as suitable for type of conductor provided. Series rated circuit breakers and plug-in circuit breakers are unacceptable.

2.13.3.1 Multipole Breakers

Provide common trip-type with single operating handle. Design breaker such that overload in one pole automatically causes all poles to open. Maintain phase sequence throughout each panel so that any three adjacent breaker poles are connected to Phases A, B, and C, respectively.

2.14 MOTORS

Provide motors in accordance with the following:

a. NEMA MG 1.

b. Hermetic-type sealed motor compressors: Also comply with UL 984.

c. Provide the size in terms of HP, or kVA, or full-load current, or a combination of these characteristics, and other characteristics, of each motor as indicated or specified.

d. Determine specific motor characteristics to ensure provision of correctly sized starters and overload heaters.

e. Rate motors for operation on 208-volt, 3-phase circuits with a terminal voltage rating of 200 volts, and those for operation on 480-volt, 3-phase circuits with a terminal voltage rating of 460 volts.

f. Use motors designed to operate at full capacity with voltage variation of plus or minus 10 percent of motor voltage rating.

g. Unless otherwise indicated, use continuous duty type motors if rated 1 HP and above.

h. Where fuse protection is specifically recommended by the equipment manufacturer, provide fused switches in lieu of non-fused switches indicated.

2.14.1 High Efficiency Single-Phase Motors

Single-phase fractional-horsepower alternating-current motors: high efficiency types corresponding to the applications listed in NEMA MG 11. In exception, for motor-driven equipment with a minimum seasonal or overall efficiency rating, such as a SEER rating, provide equipment with motor to meet the overall system rating indicated.

2.14.2 Premium Efficiency Polyphase Motors

Select polyphase motors based on high efficiency characteristics relative to typical characteristics and applications as listed in NEMA MG 10. In addition, continuous rated, polyphase squirrel-cage medium induction motors must meet the requirements for premium efficiency electric motors in accordance with NEMA MG 1, including the NEMA full load efficiency

ratings. In exception, for motor-driven equipment with a minimum seasonal or overall efficiency rating, such as a SEER rating, provide equipment with motor to meet the overall system rating indicated.

2.14.3 Motor Sizes

Provide size for duty to be performed, not exceeding the full-load nameplate current rating when driven equipment is operated at specified capacity under most severe conditions likely to be encountered. When motor size provided differs from size indicated or specified, make adjustments to wiring, disconnect devices, and branch circuit protection to accommodate equipment actually provided. Provide controllers for motors rated 1-hp and above with electronic phase-voltage monitors designed to protect motors from phase-loss, undervoltage, and overvoltage. Provide protection for motors from immediate restart by a time adjustable restart relay.

2.14.4 Wiring and Conduit

Provide internal wiring for components of packaged equipment as an integral part of the equipment. Provide power wiring and conduit for field-installed equipment as specified herein. Power wiring and conduit: conform to the requirements specified herein. Control wiring: provided under, and conform to, the requirements of the section specifying the associated equipment.

2.15 MOTOR CONTROLLERS

Provide motor controllers in accordance with the following:

a. UL 508, NEMA ICS 1, and NEMA ICS 2,.

b. Provide controllers with thermal overload protection in each phase, and one spare normally open auxiliary contact, and one spare normally closed auxiliary contact.

c. Provide controllers for motors rated 1-hp and above with electronic phase-voltage monitors designed to protect motors from phase-loss, undervoltage, and overvoltage.

d. Provide protection for motors from immediate restart by a time adjustable restart relay.

e. When used with pressure, float, or similar automatic-type or maintained-contact switch, provide a hand/off/automatic selector switch with the controller.

f. Connections to selector switch: wired such that only normal automatic regulatory control devices are bypassed when switch is in "hand" position.

g. Safety control devices, such as low and high pressure cutouts, high temperature cutouts, and motor overload protective devices: connected in motor control circuit in "hand" and "automatic" positions.

h. Control circuit connections to hand/off/automatic selector switch or to more than one automatic regulatory control device: made in accordance with indicated or manufacturer's approved wiring diagram.

i. Provide a disconnecting means, capable of being locked in the open

position, for the motor that is located in sight from the motor location and the driven machinery location. As an alternative, provide a motor controller disconnect, capable of being locked in the open position, to serve as the disconnecting means for the motor if it is in sight from the motor location and the driven machinery location.

j. Overload protective devices: provide adequate protection to motor windings; be thermal inverse-time-limit type; and include manual reset-type pushbutton on outside of motor controller case.

k. Cover of combination motor controller and manual switch or circuit breaker: interlocked with operating handle of switch or circuit breaker so that cover cannot be opened unless handle of switch or circuit breaker is in "off" position.

2.15.1 Control Wiring

Provide control wiring in accordance with the following:

a. All control wire: stranded tinned copper switchboard wire with 600-volt flame-retardant insulation Type SIS meeting UL 44, or Type MTW meeting UL 1063, and passing the VW-1 flame tests included in those standards.

b. Hinge wire: Class K stranding.

c. Current transformer secondary leads: not smaller than No. 10 AWG.

d. Control wire minimum size: No. 14 AWG.

e. Power wiring for 480-volt circuits and below: the same type as control wiring with No. 12 AWG minimum size.

f. Provide wiring and terminal arrangement on the terminal blocks to permit the individual conductors of each external cable to be terminated on adjacent terminal points.

2.15.2 Control Circuit Terminal Blocks

Provide control circuit terminal blocks in accordance with the following:

a. NEMA ICS 4.

b. Control circuit terminal blocks for control wiring: molded or fabricated type with barriers, rated not less than 600 volts.

c. Provide terminals with removable binding, fillister or washer head screw type, or of the stud type with contact and locking nuts.

d. Terminals: not less than No. 10 in size with sufficient length and space for connecting at least two indented terminals for 10 AWG conductors to each terminal.

e. Terminal arrangement: subject to the approval of the Contracting Officer with not less than four (4) spare terminals or 10 percent, whichever is greater, provided on each block or group of blocks.

f. Modular, pull apart, terminal blocks are acceptable provided they are of the channel or rail-mounted type.

g. Submit data showing that any proposed alternate will accommodate the specified number of wires, are of adequate current-carrying capacity, and are constructed to assure positive contact between current-carrying parts.

2.15.2.1 Types of Terminal Blocks

a. Short-Circuiting Type: Short-circuiting type terminal blocks: furnished for all current transformer secondary leads with provision for shorting together all leads from each current transformer without first opening any circuit. Terminal blocks: comply with the requirements of paragraph CONTROL CIRCUIT TERMINAL BLOCKS above.

b. Load Type: Load terminal blocks rated not less than 600 volts and of adequate capacity: provided for the conductors for NEMA Size 3 and smaller motor controllers and for other power circuits, except those for feeder tap units. Provide terminals of either the stud type with contact nuts and locking nuts or of the removable screw type, having length and space for at least two indented terminals of the size required on the conductors to be terminated. For conductors rated more than 50 amperes, provide screws with hexagonal heads. Conducting parts between connected terminals must have adequate contact surface and cross-section to operate without overheating. Provide eEach connected terminal with the circuit designation or wire number placed on or near the terminal in permanent contrasting color.

2.15.3 Control Circuits

Control circuits: maximum voltage of 120 volts derived from control transformer in same enclosure. Transformers: conform to UL 506, as applicable. Transformers, other than transformers in bridge circuits: provide primaries wound for voltage available and secondaries wound for correct control circuit voltage. Size transformers so that 80 percent of rated capacity equals connected load. Provide disconnect switch on primary side. Provide fuses in each ungrounded primary feeder. Provide one fused secondary lead with the other lead grounded.

2.15.4 Enclosures for Motor Controllers

NEMA ICS 6.

2.15.5 Pushbutton Stations

Provide with "start/stop" momentary contacts having one normally open and one normally closed set of contacts, and red lights to indicate when motor is running. Stations: heavy duty, oil-tight design.

2.15.6 Pilot and Indicating Lights

Provide LED cluster lamps.

2.16 MANUAL MOTOR STARTERS (MOTOR RATED SWITCHES)

Single, Double, or Three pole designed for flush mounting with overload protection.

2.16.1 Pilot Lights

Provide yoke-mounted, seven element LED cluster light module. Color: in accordance with NEMA ICS 2.2.17 LOCKOUT REQUIREMENTS

Provide disconnecting means capable of being locked out for machines and other equipment to prevent unexpected startup or release of stored energy in accordance with 29 CFR 1910.147. Comply with requirements of Division 23, "Mechanical" for mechanical isolation of machines and other equipment.

2.18 TELECOMMUNICATIONS SYSTEM

Provide system of telecommunications wire-supporting structures (pathway), including: outlet boxes, conduits with pull wires, cable trays, and other accessories for telecommunications outlets and pathway in accordance with TIA-569 and as specified herein. Additional telecommunications requirements are specified in Section 27 10 00, BUILDING TELECOMMUNICATIONS CABLING SYSTEM.

2.19 COMMUNITY ANTENNA TELEVISION (CATV) SYSTEM

Additional CATV requirements are specified in Section 27 54 00.00 20, COMMUNITY ANTENNA TELEVISION (CATV) SYSTEMS.

2.19.1 Backboards

Coordinate CATV backboard requirements with telecommunications backboard requirements as specified in Section 27 10 00, BUILDING TELECOMMUNICATIONS CABLING.

2.20 GROUNDING AND BONDING EQUIPMENT

2.20.1 Ground Rods

UL 467. Ground rods: copper-clad steel, with minimum diameter of 3/4 inch and minimum length 10 feet. Sectional ground rods are permitted.

2.20.2 Ground Bus

Copper ground bus: provided in the electrical equipment rooms as indicated.

2.20.3 Telecommunications and CATV Grounding Busbar

Provide corrosion-resistant grounding busbar suitable for indoor installation in accordance with TIA-607. Busbars: plated for reduced contact resistance. If not plated, clean the busbar prior to fastening the conductors to the busbar and apply an anti-oxidant to the contact area to control corrosion and reduce contact resistance. Provide a telecommunications main grounding busbar (TMGB) in the telecommunications entrance facility and a (TGB) in all other telecommunications rooms and equipment rooms. The telecommunications main grounding busbar (TMGB) and the telecommunications grounding busbar (TGB): sized in accordance with the immediate application requirements and with consideration of future growth. Provide telecommunications grounding busbars with the following:

a. Predrilled copper busbar provided with holes for use with standard sized lugs,

b. Minimum dimensions of 0.25 in thick by 4 in wide for the TMGB and 2 in

wide for TGBs with length as indicated;

c. Listed by a nationally recognized testing laboratory.

2.21 MANUFACTURER'S NAMEPLATE

Provide on each item of equipment a nameplate bearing the manufacturer's name, address, model number, and serial number securely affixed in a conspicuous place; the nameplate of the distributing agent will not be acceptable.

2.22 FIELD FABRICATED NAMEPLATES

Provide field fabricated nameplates in accordance with the following:

a. ASTM D709.

b. Provide laminated plastic nameplates for each equipment enclosure, relay, switch, and device; as specified or as indicated on the drawings.

c. Each nameplate inscription: identify the function and, when applicable, the position.

d. Nameplates: melamine plastic, 0.125 inch thick, white with black center core.

e. Provide red laminated plastic label with white center core where indicated.f. Surface: matte finish. Corners: square. Accurately align lettering and engrave into the core.

g. Minimum size of nameplates: one by 2.5 inches.

h. Lettering size and style: a minimum of 0.25 inch high normal block style.

2.23 WARNING SIGNS

Provide warning signs for flash protection in accordance with NFPA 70E and NEMA Z535.4 for switchboards, panelboards, industrial control panels, and motor control centers that are in other than dwelling occupancies and are likely to require examination, adjustment, servicing, or maintenance while energized. Provide field installed signs to warn qualified persons of potential electric arc flash hazards when warning signs are not provided by the manufacturer. Provide marking that is clearly visible to qualified persons before examination, adjustment, servicing, or maintenance of the equipment.

2.24 FIRESTOPPING MATERIALS

Provide firestopping around electrical penetrations in accordance with Section 07 84 00, FIRESTOPPING .

2.25 SURGE PROTECTIVE DEVICES

Provide parallel type surge protective devices (SPD) which comply with UL 1449 at the service entrance panelboard and switchboard . Provide surge protectors in a NEMA 1 or 3R enclosure, as indicated, per NEMA ICS 6. Use Type 1 or Type 2 SPD and connect on the load side of a dedicated circuit breaker.

Provide the following modes of protection:

FOR SINGLE PHASE AND THREE PHASE WYE CONNECTED SYSTEMS-
Phase to phase (L-L)
Each phase to neutral (L-N)
Neutral to ground (N-G)
Phase to ground (L-G)

SPDs at the service entrance: provide with a minimum surge current rating of 80,000 amperes for L-L mode minimum and 40,000 amperes for other modes (L-N, L-G, and N-G).

Provide SPDs per NFPA 780 for the lightning protection system.

Maximum L-N, L-G, and N-G Voltage Protection Rating:

600V for 208Y/120V, three phase system
1,200V for 480Y/277V, three phase system

Maximum L-L Voltage Protection Rating:

1,200V for 208Y/120V, three phase system
1,200V for 480Y/277V, three phase system

The minimum MCOV (Maximum Continuous Operating Voltage) rating for L-N and L-G modes of operation: 120% of nominal voltage for 240 volts and below; 115% of nominal voltage above 240 volts to 480 volts.

Provide EMI/RFI filtering per UL 1283 for each mode with the capability to attenuate high frequency noise. Minimum attenuation: 20db.

2.26 FACTORY APPLIED FINISH

Provide factory-applied finish on electrical equipment in accordance with the following:

a. NEMA 250 corrosion-resistance test and the additional requirements as specified herein.

b. Interior and exterior steel surfaces of equipment enclosures: thoroughly cleaned followed by a rust-inhibitive phosphatizing or equivalent treatment prior to painting.

c. Exterior surfaces: free from holes, seams, dents, weld marks, loose scale or other imperfections.

d. Interior surfaces: receive not less than one coat of corrosion-resisting paint in accordance with the manufacturer's standard practice.

e. Exterior surfaces: primed, filled where necessary, and given not less than two coats baked enamel with semigloss finish.

f. Equipment located indoors: ANSI Light Gray, and equipment located outdoors: ANSI Light Gray.

g. Provide manufacturer's coatings for touch-up work and as specified in paragraph FIELD APPLIED PAINTING.

PART 3 EXECUTION

3.1 INSTALLATION

Electrical installations, including weatherproof and hazardous locations and ducts, plenums and other air-handling spaces: conform to requirements of NFPA 70 and IEEE C2 and to requirements specified herein.

3.1.1 Underground Service

Underground service conductors and associated conduit: continuous from service entrance equipment to outdoor power system connection.

3.1.2 Service Entrance Identification

Service entrance disconnect devices, switches, and enclosures: labeled and identified as such.

3.1.2.1 Labels

Wherever work results in service entrance disconnect devices in more than one enclosure, as permitted by NFPA 70, label each enclosure, new and existing, as one of several enclosures containing service entrance disconnect devices. Label, at minimum: indicate number of service disconnect devices housed by enclosure and indicate total number of enclosures that contain service disconnect devices. Provide laminated plastic labels conforming to paragraph FIELD FABRICATED NAMEPLATES. Use lettering of at least 0.25 inch in height, and engrave on black-on-white matte finish. Service entrance disconnect devices in more than one enclosure: provided only as permitted by NFPA 70.

3.1.3 Wiring Methods

Provide insulated conductors installed in rigid steel conduit, IMC, rigid nonmetallic conduit, or EMT, except where specifically indicated or specified otherwise or required by NFPA 70 to be installed otherwise. Grounding conductor: separate from electrical system neutral conductor. Provide insulated green equipment grounding conductor for circuit(s) installed in conduit and raceways. Minimum conduit size: 1/2 inch in diameter for low voltage lighting and power circuits. Vertical distribution in multiple story buildings: made with metal conduit in fire-rated shafts, with metal conduit extending through shafts for minimum distance of 6 inches. Firestop conduit which penetrates fire-rated walls, fire-rated partitions, or fire-rated floors in accordance with Section 07 84 00, FIRESTOPPING.

3.1.3.1 Pull Wire

Install pull wires in empty conduits. Pull wire: plastic having minimum 200-pound force tensile strength. Leave minimum 36 inches of slack at each end of pull wire.

3.1.4 Conduit Installation

Unless indicated otherwise, conceal conduit under floor slabs and within finished walls, ceilings, and floors. Keep conduit minimum 6 inches away from parallel runs of flues and steam or hot water pipes. Install conduit parallel with or at right angles to ceilings, walls, and structural members where located above accessible ceilings and where conduit will be visible

after completion of project. Run conduits under floor slab as if exposed.

3.1.4.1 Restrictions Applicable to EMT

a. Do not install underground.

b. Do not encase in concrete, mortar, grout, or other cementitious materials.

c. Do not use in areas subject to severe physical damage including but not limited to equipment rooms where moving or replacing equipment could physically damage the EMT.

d. Do not use outdoors.

3.1.4.2 Restrictions Applicable to Nonmetallic Conduit

a. PVC Schedule 40

(1) Do not use in areas where subject to severe physical damage, including but not limited to, mechanical equipment rooms, electrical equipment rooms, hospitals, power plants, missile magazines, and other such areas.

(2) Do not use in penetrating fire-rated walls or partitions, or fire-rated floors.

(3) Do not use above grade, except where allowed in this section for rising through floor slab or indicated otherwise.

3.1.4.3 Restrictions Applicable to Flexible Conduit

Use only as specified in paragraph FLEXIBLE CONNECTIONS.

3.1.4.4 Underground Conduit

Plastic-coated rigid steel; plastic-coated steel IMC; PVC, Type EPC-40
Plastic coating: extend minimum 6 inches above floor.

3.1.4.5 Conduit for Circuits Rated Greater Than 600 Volts

Rigid metal conduit or IMC only.

3.1.4.6 Conduit Installed Under Floor Slabs

Conduit run under floor slab: located a minimum of 12 inches below the vapor barrier. Seal around conduits at penetrations thru vapor barrier.

3.1.4.7 Conduit Through Floor Slabs

Where conduits rise through floor slabs, do not allow curved portion of bends to be visible above finished slab.

3.1.4.8 Stub-Ups

Provide conduits stubbed up through concrete floor for connection to free-standing equipment with adjustable top or coupling threaded inside for plugs, set flush with finished floor. Extend conductors to equipment in rigid steel conduit, except that flexible metal conduit may be used 6 inches

above floor. Where no equipment connections are made, install screwdriver-operated threaded flush plugs in conduit end.

3.1.4.9 Conduit Support

Support conduit by pipe straps, wall brackets, threaded rod conduit hangers, or ceiling trapeze. Fasten by wood screws to wood; by toggle bolts on hollow masonry units; by concrete inserts or expansion bolts on concrete or brick; and by machine screws, welded threaded studs, or spring-tension clamps on steel work. Threaded C-clamps may be used on rigid steel conduit only. Do not weld conduits or pipe straps to steel structures. Do not exceed one-fourth proof test load for load applied to fasteners. Provide vibration resistant and shock-resistant fasteners attached to concrete ceiling. Do not cut main reinforcing bars for any holes cut to depth of more than 1 1/2 inches in reinforced concrete beams or to depth of more than 3/4 inch in concrete joints. Fill unused holes. In partitions of light steel construction, use sheet metal screws. In suspended-ceiling construction, run conduit above ceiling. Do not support conduit by ceiling support system. Conduit and box systems: supported independently of both (a) tie wires supporting ceiling grid system, and (b) ceiling grid system into which ceiling panels are placed. Do not share supporting means between electrical raceways and mechanical piping or ducts. Coordinate installationwith above-ceiling mechanical systems to assure maximum accessibility to all systems. Spring-steel fasteners may be used for lighting branch circuit conduit supports in suspended ceilings in dry locations. Where conduit crosses building expansion joints, provide suitable expansion fitting that maintains conduit electrical continuity by bonding jumpers or other means. For conduits greater than 2 1/2 inches inside diameter, provide supports to resist forces of 0.5 times the equipment weight in any direction and 1.5 times the equipment weight in the downward direction.

3.1.4.10 Directional Changes in Conduit Runs

Make changes in direction of runs with symmetrical bends or cast-metal fittings. Make field-made bends and offsets with hickey or conduit-bending machine. Do not install crushed or deformed conduits. Avoid trapped conduits. Prevent plaster, dirt, or trash from lodging in conduits, boxes, fittings, and equipment during construction. Free clogged conduits of obstructions.

3.1.4.11 Locknuts and Bushings

Fasten conduits to sheet metal boxes and cabinets with two locknuts where required by NFPA 70, where insulated bushings are used, and where bushings cannot be brought into firm contact with the box; otherwise, use at least minimum single locknut and bushing. Provide locknuts with sharp edges for digging into wall of metal enclosures. Install bushings on ends of conduits, and provide insulating type where required by NFPA 70.

3.1.4.12 Flexible Connections

Provide flexible steel conduit between 3 and 6 feet in length for recessed and semirecessed lighting fixtures; for equipment subject to vibration, noise transmission, or movement; and for motors. Install flexible conduit to allow 20 percent slack. Minimum flexible steel conduit size: 1/2 inch diameter. Provide liquidtight flexible conduit in wet and damp locations for equipment subject to vibration, noise transmission, movement or motors. Provide separate ground conductor across flexible connections.

3.1.4.13 Telecommunications and Signal System Pathway

Install telecommunications pathway in accordance with TIA-569.

a. Horizontal Pathway: Telecommunications pathways from the work area to the telecommunications room: installed and cabling length requirements in accordance with TIA-568-C.1. Size conduits and cable trays in accordance with TIA-569 and as indicated.

b. Backbone Pathway: Telecommunication pathways from the telecommunications entrance facility to telecommunications rooms, and, telecommunications equipment rooms (backbone cabling): installed in accordance with TIA-569. Size conduits and cable trays for telecommunications risers in accordance with TIA-569.

3.1.5 Cable Tray Installation

Install cable trays parallel with or at right angles to ceilings, walls, and structural members. Support at maximum 6 foot intervals. In addition, install and ground telecommunications cable tray in accordance with TIA-569, and TIA-607. Coat contact surfaces of aluminum connections with an antioxidant compound prior to assembly. Ensure edges, fittings, and hardware are finished free from burrs and sharp edges. Provide No. 2 AWG bare copper wire throughout cable tray system, and bond to each section. Use No. 1/0 aluminum wire if cable tray is aluminum. Install conductors that run though smoke and fire partitions in 4 inch rigid steel conduits with grounding bushing, extending 12 inches beyond each side of partitions. Seal conduit on both ends to maintain smoke and fire ratings of partitions. Provide supports to resist forces of 0.5 times the equipment weight in any direction and 1.5 times the equipment weight in the downward direction.

3.1.6 Boxes, Outlets, and Supports

Provide boxes in wiring and raceway systems wherever required for pulling of wires, making connections, and mounting of devices or fixtures. Boxes for metallic raceways: cast-metal, hub-type when located in wet locations, when surface mounted on outside of exterior surfaces, and when specifically indicated. Boxes in other locations: sheet steel, except that aluminum boxes may be used with aluminum conduit, and nonmetallic boxes may be used with nonmetallic conduit system. Provide each box with volume required by NFPA 70 for number of conductors enclosed in box. Boxes for mounting lighting fixtures: minimum 4 inches square, or octagonal, except that smaller boxes may be installed as required by fixture configurations, as approved. Boxes for use in masonry-block or tile walls: square-cornered, tile-type, or standard boxes having square-cornered, tile-type covers. Provide gaskets for cast-metal boxes installed in wet locations and boxes installed flush with outside of exterior surfaces. Provide separate boxes for flush or recessed fixtures when required by fixture terminal operating temperature; provide readily removable fixturesfor access to boxes unless ceiling access panels are provided. Support boxes and pendants for surface-mounted fixtures on suspended ceilings independently of ceiling supports. Fasten boxes and supports with wood screws on wood, with bolts and expansion shields on concrete or brick, with toggle bolts on hollow masonry units, and with machine screws or welded studs on steel. In open overhead spaces, cast boxes threaded to raceways need not be separately supported except where used for fixture support; support sheet metal boxes directly from building structure or by bar hangers. Where bar hangers are

used, attach bar to raceways on opposite sides of box, and support raceway with approved-type fastener maximum 24 inches from box. When penetrating reinforced concrete members, avoid cutting reinforcing steel.

3.1.6.1 Boxes

Boxes for use with raceway systems: minimum 1 1/2 inches deep, except where shallower boxes required by structural conditions are approved. Boxes for other than lighting fixture outlets: minimum 4 inches square, except that 4 by 2 inch boxes may be used where only one raceway enters outlet. Telecommunications outlets: a minimum of 5 inches quare by 2 7/8 inches deep. Mount outlet boxes flush in finished walls.

3.1.6.2 Pull Boxes

Construct of at least minimum size required by NFPA 70 of code-gauge galvanized sheet steel, except where cast-metal boxes are required in locations specified herein. Provide boxes with screw-fastened covers. Where several feeders pass through common pull box, tag feeders to indicate clearly electrical characteristics, circuit number, and panel designation.

3.1.6.3 Extension Rings

Extension rings are not permitted for new construction.

3.1.7 Mounting Heights

Mount panelboards, circuit breakers, motor controllers and disconnecting switches so height of operating handle at its highest position is maximum 78 inches above floor. Mount lighting switches 48 inches above finished floor. Mount receptacles and telecommunications outlets 18 inches above finished floor, unless otherwise indicated. Mount other devices as indicated.

3.1.8 Conductor Identification

Provide conductor identification within each enclosure where tap, splice, or termination is made. For conductors No. 6 AWG and smaller diameter, provide color coding by factory-applied, color-impregnated insulation. For conductors No. 4 AWG and larger diameter, provide color coding by plastic-coated, self-sticking markers; colored nylon cable ties and plates; or heat shrink-type sleeves. Identify control circuit terminations in accordance with Section 23 09 23.13 22 BACnet Direct Digital Control Systems for HVAC and manufacturer's recommendations.. Provide telecommunications system conductor identification as specified in Section 27 10 00 BUILDING TELECOMMUNICATIONS CABLING SYSTEMS.

3.1.8.1 Marking Strips

Provide marking strips in accordance with the following:

a. Provide white or other light-colored plastic marking strips, fastened by screws to each terminal block, for wire designations.

b. Use permanent ink for the wire numbers

c. Provide reversible marking strips to permit marking both sides, or provide two marking strips with each block.

d. Size marking strips to accommodate the two sets of wire numbers.

e. Assign a device designation in accordance with NEMA ICS 1 to each device to which a connection is made. Mark each device terminal to which a connection is made with a distinct terminal marking corresponding to the wire designation used on the Contractor's schematic and connection diagrams.

f. The wire (terminal point) designations used on the Contractor's wiring diagrams and printed on terminal block marking strips may be according to the Contractor's standard practice; however, provide additional wire and cable designations for identification of remote (external) circuits for the Government's wire designations.

g. Prints of the marking strips drawings submitted for approval will be so marked and returned to the Contractor for addition of the designations to the terminal strips and tracings, along with any rearrangement of points required.

3.1.9 Splices

Make splices in accessible locations. Make splices in conductors No. 10 AWG and smaller diameter with insulated, pressure-type connector. Make splices in conductors No. 8 AWG and larger diameter with solderless connector, and cover with insulation material equivalent to conductor insulation.

3.1.10 Covers and Device Plates

Install with edges in continuous contact with finished wall surfaces without use of mats or similar devices. Plaster fillings are not permitted. Install plates with alignment tolerance of 1/16 inch. Use of sectional-type device plates are not permitted. Provide gasket for plates installed in wet locations.

3.1.11 Electrical Penetrations

Seal openings around electrical penetrations through fire resistance-rated walls, partitions, floors, or ceilings in accordance with Section 07 84 00 FIRESTOPPING.

3.1.12 Grounding and Bonding

Provide in accordance with NFPA 70 and NFPA 780. Ground exposed, non-current-carrying metallic parts of electrical equipment, access flooring support system, metallic raceway systems, grounding conductor in metallic and nonmetallic raceways, telecommunications system grounds, and neutral conductor of wiring systems. Make ground connection at main service equipment, and extend grounding conductor to point of entrance of metallic water service. Make connection to water pipe by suitable ground clamp or lug connection to plugged tee. If flanged pipes are encountered, make connection with lug bolted to street side of flanged connection. Supplement metallic water service grounding system with additional made electrode in compliance with NFPA 70. Make ground connection to driven ground rods on exterior of building. Interconnect all grounding media in or on the structure to provide a common ground potential. This includes lightning protection, electrical service, telecommunications system grounds, as well as underground metallic piping systems. Make interconnection to the gas line on the customer's side of the meter. Use

main size lightning conductors for interconnecting these grounding systems to the lightning protection system. In addition to the requirements specified herein, provide telecommunications grounding in accordance with TIA-607. Where ground fault protection is employed, ensure that connection of ground and neutral does not interfere with correct operation of fault protection.

3.1.12.1 Ground Rods

Provide cone pointed ground rods. Measure the resistance to ground using the fall-of-potential method described in IEEE 81. Do not exceed 25 ohms under normally dry conditions for the maximum resistance of a driven ground. If this resistance cannot be obtained with a single rod, provide up to three additional rods, spaced on center, not less than twice the distance of the length of the rod,. If the resultant resistance exceeds 25 ohms measured not less than 48 hours after rainfall, notify the Contracting Officer who will decide on the number of ground rods to add.

3.1.12.2 Grounding Connections

Make grounding connections which are buried or otherwise normally inaccessible, excepting specifically those connections for which access for periodic testing is required, by exothermic weld or compression connector.

a. Make exothermic welds strictly in accordance with the weld manufacturer's written recommendations. Welds which are "puffed up" or which show convex surfaces indicating improper cleaning are not acceptable. Mechanical connectors are not required at exothermic welds.

b. Make compression connections using a hydraulic compression tool to provide the correct circumferential pressure. Provide tools and dies as recommended by the manufacturer. Use an embossing die code or other standard method to provide visible indication that a connector has been adequately compressed on the ground wire.

3.1.12.3 Ground Bus

Provide a copper ground bus in the electrical equipment rooms as indicated. Noncurrent-carrying metal parts of transformer neutrals and other electrical equipment: effectively grounded by bonding to the ground bus. Bond the ground bus to both the entrance ground, and to a ground rod or rods as specified above having the upper ends terminating approximately 4 inches above the floor. Make connections and splices of the brazed, welded, bolted, or pressure-connector type, except use pressure connectors or bolted connections for connections to removable equipment.

3.1.12.4 Resistance

Maximum resistance-to-ground of grounding system: do not exceed 5 ohms under dry conditions. Where resistance obtained exceeds 5 ohms, contact Contracting Officer for further instructions.

3.1.12.5 Telecommunications System

Provide telecommunications grounding in accordance with the following:

a. Telecommunications Grounding Busbars: Provide a telecommunications main grounding busbar (TMGB) in the telecommunications entrance facility. Install the TMGB as close to the electrical service entrance

grounding connection as practicable. Provide a telecommunications grounding busbar (TGB) in all other telecommunications rooms and telecommunications equipment rooms. Install the TGB as close to the telecommunications room panelboard as practicable, when equipped. Where a panelboard for telecommunications equipment is not installed in the telecommunications room, locate the TGB near the backbone cabling and associated terminations. In addition, locate the TGB to provide for the shortest and straightest routing of the grounding conductors. Where a panelboard for telecommunications equipment is located within the same room or space as a TGB, bond that panelboard's alternating current equipment ground (ACEG) bus (when equipped) or the panelboard enclosure to the TGB. Install telecommunications grounding busbars to maintain clearances as required by NFPA 70 and insulated from its support. A minimum of 2 inches separation from the wall is recommended to allow access to the rear of the busbar and adjust the mounting height to accommodate overhead or underfloor cable routing.

b. Telecommunications Bonding Conductors: Provide main telecommunications service equipment ground consisting of separate bonding conductor for telecommunications, between the TMGB and readily accessible grounding connection of the electrical service. Grounding and bonding conductors should not be placed in ferrous metallic conduit. If it is necessary to place grounding and bonding conductors in ferrous metallic conduit that exceeds3 feet in length, bond the conductors to each end of the conduit using a grounding bushing or a No. 6 AWG conductor, minimum. Provide a telecommunications bonding backbone (TBB) that originates at the TMGB extends throughout the building using the telecommunications backbone pathways, and connects to the TGBs in all telecommunications rooms and equipment rooms. Install the TBB conductors such that they are protected from physical and mechanical damage. The TBB conductors should be installed without splices and routed in the shortest possible straight-line path. Make the bonding conductor between a TBB and a TGB continuous. Where splices are necessary, the number of splices should be a minimum. Make the splices accessible and located in telecommunications spaces. Connect joined segments of a TBB using exothermic welding, irreversible compression-type connectors, or equivalent. Install all joints to be adequately supported and protected from damage. Whenever two or more TBBs are used within a multistory building, bond the TBBs together with a grounding equalizer (GE) at the top floor and at a minimum of every third floor in between. Do not connect the TBB and GE to the pathway ground, except at the TMGB or the TGB.

c. Telecommunications Grounding Connections: Telecommunications grounding connections to the TMGB or TGB: utilize listed compression two-hole lugs, exothermic welding, suitable and equivalent one hole non-twisting lugs, or other irreversible compression type connections. Bond all metallic pathways, cabinets, and racks for telecommunications cabling and interconnecting hardware located within the same room or space as the TMGB or TGB to the TMGB or TGB respectively. In a metal frame (structural steel) building, where the steel framework is readily accessible within the room; bond each TMGB and TGB to the vertical steel metal frame using a minimum No. 6 AWG conductor. Where the metal frame is external to the room and readily accessible, bond the metal frame to the TGB or TMGB with a minimum No. 6 AWG conductor. When practicable because of shorter distances and, where horizontal steel members are permanently electrically bonded to vertical column members, the TGB may be bonded to these horizontal members in lieu of the vertical column members. All connectors used for bonding to the metal

frame of a building must be listed for the intended purpose.

3.1.13 Equipment Connections

Provide power wiring for the connection of motors and control equipment under this section of the specification. Except as otherwise specifically noted or specified, automatic control wiring, control devices, and protective devices within the control circuitry are not included in this section of the specifications and are provided under the section specifying the associated equipment.

3.1.14 Surge Protective Devices

Connect the surge protective devices in parallel to the power source, keeping the conductors as short and straight as practically possible. Maximum allowed lead length is 3 feet.

3.2 FIELD FABRICATED NAMEPLATE MOUNTING

Provide number, location, and letter designation of nameplates as indicated. Fasten nameplates to the device with a minimum of two sheet-metal screws or two rivets.

3.3 WARNING SIGN MOUNTING

Provide the number of signs required to be readable from each accessible side. Space the signs in accordance with NFPA 70E.

3.4 FIELD APPLIED PAINTING

Paint electrical equipment as required to match finish of adjacent surfaces or to meet the indicated or specified safety criteria. Painting: as specified in Section 09 90 00 PAINTS AND COATINGS. Where field painting of enclosures for panelboards, load centers or the like is specified to match adjacent surfaces, to correct damage to the manufacturer's factory applied coatings, or to meet the indicated or specified safety criteria, provide manufacturer's recommended coatings and apply in accordance to manufacturer's instructions.

3.5 FIELD QUALITY CONTROL

Furnish test equipment and personnel and submit written copies of test results. Give Contracting Officer 5 working days notice prior to each test.

3.5.1 Devices Subject to Manual Operation

Operate each device subject to manual operation at least five times, demonstrating satisfactory operation each time.

3.5.2 600-Volt Wiring Test

Test wiring rated 600 volt and less to verify that no short circuits or accidental grounds exist. Perform insulation resistance tests on wiring No. 6 AWG and larger diameter using instrument which applies voltage of approximately 500 volts to provide direct reading of resistance. Minimum resistance: 250,000 ohms.

3.5.3 Ground-Fault Receptacle Test

Test ground-fault receptacles with a "load" (such as a plug in light) to verify that the "line" and "load" leads are not reversed.

3.5.4 Grounding System Test

Test grounding system to ensure continuity, and that resistance to ground is not excessive. Test each ground rod for resistance to ground before making connections to rod; tie grounding system together and test for resistance to ground. Make resistance measurements in dry weather, not earlier than 48 hours after rainfall. Submit written results of each test to Contracting Officer, and indicate location of rods as well as resistance and soil conditions at time measurements were made.

-- End of Section --

THIS PAGE HAS BEEN INTENTIONALLY LEFT BLANK

SECTION 26 27 14.00 20

ELECTRICITY METERING
02/11

PART 1 GENERAL

1.1 REFERENCES

The publications listed below form a part of this specification to the extent referenced. The publications are referred to within the text by the basic designation only.

INSTITUTE OF ELECTRICAL AND ELECTRONICS ENGINEERS (IEEE)

IEEE C2	(2012; Errata 2012; INT 1-4 2012; INT 5-7 2013) National Electrical Safety Code
IEEE C37.90.1	(2012) Standard for Surge Withstand Capability (SWC) Tests for Relays and Relay Systems Associated with Electric Power Apparatus
IEEE C57.13	(2008; INT 2009) Standard Requirements for Instrument Transformers
IEEE Stds Dictionary	(2009) IEEE Standards Dictionary: Glossary of Terms & Definitions

INTERNATIONAL ELECTRICAL TESTING ASSOCIATION (NETA)

NETA ATS	(2013) Standard for Acceptance Testing Specifications for Electrical Power Equipment and Systems

NATIONAL ELECTRICAL MANUFACTURERS ASSOCIATION (NEMA)

ANSI C12.1	(2008) Electric Meters Code for Electricity Metering
ANSI C12.18	(2006) Protocol Specification for ANSI Type 2 Optical Port
ANSI C12.20	(2010) Electricity Meters - 0.2 and 0.5 Accuracy Classes
ANSI C12.7	(2005) Requirements for Watthour Meter Sockets
NEMA C12.19	(2008) Utility Industry End Device Data Tables

NATIONAL FIRE PROTECTION ASSOCIATION (NFPA)

NFPA 70	(2014; AMD 1 2013; Errata 1 2013; AMD 2 2013; Errata 2 2013; AMD 3 2014; Errata 3-4 2014; AMD 4-6 2014) National Electrical Code

1.2 DEFINITIONS

Unless otherwise specified or indicated, electrical and electronics terms used in these specifications, and on the drawings, shall be as defined in IEEE Stds Dictionary.

1.3 SUBMITTALS

Government approval is required for submittals with a "G" designation; submittals not having a "G" designation are for Contractor Quality Control approval.

Submit the following in accordance with Section 01 33 00 SUBMITTAL PROCEDURES:

SD-02 Shop Drawings

Installation Drawings; G

SD-03 Product Data

Electricity meters; G

The most recent meter product data shall be submitted as a Technical Data Package and shall be licensed to the project site. Any software shall be submitted on CD-ROM and hard copies of the software user manual shall be submitted for each piece of software provided.

Current transformer; G

External communications devices; G

SD-06 Test Reports

Acceptance checks and tests; G

System functional verification; G

Building meter installation sheet, per building; G

Meter configuration template; G

Contractor shall fill in the meter configuration template and submit to the Activity for concurrence.

Meter configuration report; G

The meter configuration report shall be submitted as a Technical Data Package.

SD-10 Operation and Maintenance Data

Electricity Meters and Accessories, Data Package 5; G

Submit operation and maintenance data in accordance with Section 01 78 23 OPERATION AND MAINTENANCE DATA and as specified herein.

SD-11 Closeout Submittals

System functional verification; G

1.4 QUALITY ASSURANCE

1.4.1 Installation Drawings

Drawings shall be provided in hard-copy and PDF electronic format, and shall include but not be limited to the following:

a. Wiring diagrams with terminals identified of advanced meter, current transformers, protocol modules, communications interfaces, Ethernet connections, and telephone lines.

b. One-line diagram, including meters, switch(es), current transformers, protocol modules, communications interfaces, Ethernet connections, telephone outlets, and fuses.

1.4.2 Standard Products

Provide materials and equipment that are products of manufacturers regularly engaged in the production of such products which are of equal material, design and workmanship. Products shall have been in satisfactory commercial or industrial use for 1 year prior to bid opening. The 1-year period shall include applications of equipment and materials under similar circumstances and of similar size. The product, or an earlier release of the product, shall have been on sale on the commercial market through advertisements, manufacturers catalogs, or brochures during the prior 1-year period. Where two or more items of the same class of equipment are required, these items shall be products of a single manufacturer; however, the component parts of the item need not be the products of the same manufacturer unless stated in this section.

1.4.3 Material and Equipment Manufacturing Data

Products manufactured more than 1 year prior to date of delivery to site shall not be used, unless specified otherwise.

1.5 MAINTENANCE

1.5.1 Additions to Operation and Maintenance Data

In addition to requirements of Data Package 5, include the following on the actual electricity meters and accessories provided:

a. A condensed description of how the system operates

b. Block diagram indicating major assemblies

c. Troubleshooting information

d. Preventive maintenance

e. Prices for spare parts and supply list

1.6 WARRANTY

The equipment items and software shall be supported by service

organizations which are reasonably convenient to the equipment installation in order to render satisfactory service to the equipment and software on a regular and emergency basis during the warranty period of the contract.

1.7 SYSTEM DESCRIPTION

1.7.1 System Requirements

Electricity metering, consisting of meters and associated equipment, will be used to record the electricity consumption and other values as described in the requirements that follow and as shown on the drawings. Communication system requirements are contained in a separate specification section as identified in paragraph entitled "Communications Interfaces".

1.7.2 Selection Criteria

Metering components and software are part of a system that includes the physical meter, data recorder function and communications method. Every building site identified shall include sufficient metering components to measure the electrical parameters identified and to store and communicate the values as required.

Contractor shall verify that the electricity meter installed on any building site is compatible with the base-wide metering system with respect to the types of meters selected and the method used to program the meters for initial use. Software and meter programming tools are necessary to set up the meters described by this specification. New software tools different from the meter programming methods currently used by base personnel will require separate approval for use.

Contractor shall verify that the metering system installed on any building site is compatible with the facility-wide or base-wide communication and meter reading protocol system.

PART 2 PRODUCTS

2.1 ELECTRICITY METERS AND ACCESSORIES

Provide meter(s) and connect the meter(s) to the existing AMI DAS. The contractor shall use the existing government laptop computers to configure the meter using existing software loaded on the computer. The contractor will not be allowed to modify any software or add any additional software to the computer. Alternatively, the government will configure the meter(s), which must be compatible with the existing system, using existing software. Contractor shall insure that the meter(s) will transmit the specified data to the DAS. The current meters being used by MCB Camp Lejeune are:

ACTIVITY	CURRENT AMI CONTRACTOR	EXISTING METER TYPE	COMM METHOD	COMMENTS
Marine Corps Base Camp Lejeune	American Systems	Itron CENTRON	Note 1	Ion Enterprise DAS Software

Note 1: Combination radio mesh with fiber optic links

2.1.1 Physical and Common Requirements

a. Provide metering system components as shown in this specification. Provide Meter configuration template.

b. Meter shall have NEMA 3R enclosure for surface mounting with bottom or rear penetrations.

c. Surge withstand capability shall conform to IEEE C37.90.1.

d. Use #12 SIS (XHHW, or equivalent) wiring with ring lugs for all meter connections. Color code and mark the conductors as follows:

(1) Red - Phase A CT - C1
(2) Orange - Phase B CT - C2
(3) Brown - Phase C CT - C3
(4) Gray with white stripe - neutral current return - C0
(5) Black - Phase A voltage - V1
(6) Yellow - Phase B voltage - V2
(7) Blue - Phase C voltage - V3
(8) White - Neutral voltage

2.1.2 Current Transformer Requirements

a. Current transformer shall be installed with a rating as shown in the schedule.

b. Current transformers shall have an Accuracy Class of 0.3 (with a maximum error of plus/minus 0.3 percent at 5.0 amperes) when operating within the specified rating factor.

c. Current transformers shall be solid-core, bracket-mounted for new installations using ring-tongue lugs for electrical connections. Current transformers shall be accessible and the associated wiring shall be installed in an organized and neat workmanship arrangement. Current transformers that are retrofitted onto existing switchgear busbar can be a busbar split-core design.

d. Current transformers shall have:

(1) Insulation Class: All 600 volt and below current transformers shall be rated 10 KV BIL.

(2) Frequency: Nominal 60 Hz.

(3) Burden: Burden class shall be selected for the load.

(4) Phase Angle Range: 0 to 60 degrees.

e. Meter shall accept current input from standard instrument transformers (5A secondary current transformers).

f. Current inputs shall have a continuous rating in accordance with

IEEE C57.13.

g. Provide one single-ratio current transformer for each phase per power transformer with characteristics listed in the following table.

Single-Ratio Current Transformer Characteristics				
kVA	Sec. Volt	CT Ratio	RF	Meter Acc. Class
150	208Y/120	300/5	2.0	0.3 thru B-0.2

2.1.3 Meter Requirements

Provide one meter per transformer.

Electricity meters shall include the following features:

a. Meter shall comply with ANSI C12.1, NEMA C12.19, and ANSI C12.20.

b. Meter sockets shall comply with ANSI C12.7.

c. Provide socket-mounted meters as indicated.

d. Meter shall be a Class 20, transformer rated design.

e. Meter shall be rated for use at temperature from minus 40 degrees Centigrade to plus 70 degrees Centigrade.

f. The meters shall have an electronic demand recording register and shall be secondary reading as indicated. The register shall be used to indicate maximum kilowatt demand as well as cumulative or continuously cumulative demand. Demand shall be measured on a block-interval basis and shall be capable of a 5 to 60 minute interval and initially set to a 15-minute interval. It shall have provisions to be programmed to calculate demand on a rolling interval basis. Meter readings shall be true RMS.

g. The meter electronic register shall be of modular design with non-volatile data storage. Downloading meter stored data shall be capable via an optical port. Recording capability of data storage with a minimum capability of 89 days of 15 minute, 2 channel interval data. The meter shall be capable of providing at least 2 KYZ pulse outputs (dry contacts). Default initial configuration (unless identified otherwise by base personnel) shall be:

(1) First channel - kWh
(2) Second channel - kVARh
(3) KYZ output #1 - kWh
(4) KYZ output #2 - kVARh

h. All meters shall have identical features available in accordance with this specification. The meter schedule identifies which features shall be activated at each meter location.

i. Enable switches for Time of Use (TOU), pulse and load profile measurement module at the factory.

j. Meter shall have an optical port on front of meter capable of speeds from 9600 to a minimum of 19.2k baud, and shall be initially set at 9600 baud. Optical device shall be compatible with ANSI C12.18.

k. Meters shall be 120-480 volts auto ranging.

l. Provide blank tag fixed to the meter faceplate for the addition of the meter multiplier, which will be the product of the current transformer ratio and will be filled in by base personnel on the job site. The meter's nameplate shall include:

(1) Meter ID number.
(2) Rated voltage.
(3) Current class.
(4) Metering form.
(5) Test amperes.
(6) Frequency.
(7) Catalog number.
(8) Manufacturing date.

m. Meter covers shall be polycarbonate resins with an optical port and reset. Backup battery shall be easily accessible for change-out after removing the meter cover.

n. The normal billing data scroll shall be fully programmable. Data scroll display shall include the following.

(1) Number of demand resets.
(2) End-of-interval indication.
(3) Maximum demand.
(4) New maximum demand indication.
(5) Cumulative or continuously cumulative.
(6) Time remaining in interval.
(7) Kilowatt hours.

o. The register shall incorporate a built-in test mode that allows it to be tested without the loss of any data or parameters. The following quantities shall be available for display in the test mode:

(1) Present interval's accumulating demand.
(2) Maximum demand.
(3) Number of impulses being received by the register.

p. Pulse module simple I/O board with programmable ratio selection.

q. Meters shall be programmed after installation via an optical port. Optical display shall show TOU data, peak kWh, semi-peak kWh, off peak kWh, and phase angles.

r. Self-monitoring to provide for:

(1) Unprogrammed register.
(2) RAM checksum error.
(3) ROM checksum error.
(4) Hardware failure.
(5) Memory failure.
(6) EPROM error.
(7) Battery status (fault, condition, or time in service).

s. Liquid crystal alphanumeric displays, 9 digits, blinking squares confirm register operation. 6 Large digits for data and smaller digits for display identifier.

t. Display operations, programmable sequence with display identifiers. Display identifiers shall be selectable for each item. Continually sequence with time selectable for each item.

u. The meters shall support three modes of registers: Normal Mode, Alternate Mode, and Test Mode. The meter also shall support a "Toolbox" or "Service Information" (accessible in the field) through an optocom port to a separate computer using the supplied software to allow access to instantaneous service information such as voltage, current, power factor, load demand, and the phase angle for individual phases.

v. Meter shall have a standard warranty.

2.1.4 Disconnect Method

a. Provide a 10-pole safety disconnect complete with isolation devices for the voltage and current transformer inputs, including a shorting means for the current transformers.

2.1.5 Installation Methods

a. Transformer Mounted ("XFMR" in Metering Systems Schedule). Meter base shall be located outside on the secondary side of the pad-mounted transformer.

2.2 COMMUNICATIONS INTERFACES

Meter shall have two-way communication with the existing data acquisition system (DAS). Provide a communications interface compatible with existing metering system on base.

Provide interfacing software if a meter is used that is different than the existing meters at the Activity to ensure compatibility within the metering system.

PART 3 EXECUTION

3.1 INSTALLATION

Electrical installations shall conform to IEEE C2, NFPA 70 (National Electrical Code), and to the requirements specified herein. Provide new equipment and materials unless indicated or specified otherwise.

3.2 FIELD QUALITY CONTROL

Perform the following acceptance checks and tests on all installed meters.

3.2.1 Performance of Acceptance Checks and Tests

Perform in accordance with the manufacturer's recommendations and include the following visual and mechanical inspections and electrical tests, performed in accordance with NETA ATS.

a. Meter Assembly

(1) Visual and mechanical inspection.

(a) Compare equipment nameplate data with specifications and approved shop drawings.

(b) Inspect physical and mechanical condition. Confirm the meter is firmly seated in the socket, the socket is not abnormally heated, the display is visible, and the ring and seal on the cover are intact.

(c) Inspect all electrical connections to ensure they are tight. For Class 200 services, verify tightness of the service conductor terminations for high resistance using low-resistance ohmmeter, or by verifying tightness of accessible bolted electrical connections by calibrated torque-wrench method.

(d) Record model number, serial number, firmware revision, software revision, and rated control voltage.

(e) Verify operation of display and indicating devices.

(f) Record password and user log-in for each meter.

(g) Verify grounding of metering enclosure.

(h) Set all required parameters including instrument transformer ratios, system type, frequency, power demand methods/intervals, and communications requirements. Verify that the CT ratio and the PT ratio are properly included in the meter multiplier or the programming of the meter. Confirm that the multiplier is provided on the meter face or on the meter.

(i) Provide building meter installation sheet, per building for each facility. Include the following data:

E-S1: Building Meter Installation Sheet Per Building

Item	Description
Serial #:	_____
Meter #:	_____
Facility:	_____
Pole Mount:	_____
Nearest Facility:	_____
MFG:	_____
Form:	_____
Class:	_____
CT Ratio:	_____
VT Ratio:	_____
Multiplier:	_____
Voltage:	_____
Current:	_____
Wires:	_____
Delta/Wye:	_____
AMR Meter:	_____
KWH Read.:	_____
Location Description:	_____
Remarks:	_____

Additional Work Required: _____

(Include similar information for old meters where applicable.)

PERFORMED BY: _____
DATE: _____

(2) Electrical tests.

(a) Apply voltage or current as appropriate to each analog input and verify correct measurement and indication.

(b) Confirm correct operation and setting of each auxiliary input/output feature including mechanical relay, digital, and analog.

(c) After initial system energization, confirm measurements and indications are consistent with loads present.

(d) Make note of, and report, any "Error-Code" or "Caution-Code" on the meter's display.

(3) Provide meter configuration report.

b. Current Transformers

(1) Visual and mechanical inspection.

(a) Compare equipment nameplate data with specification and approved shop drawings.

(b) Inspect physical and mechanical condition.

(c) Verify correct connection, including polarity.

(d) Inspect all electrical connections to ensure they are tight.

(e) Verify that required grounding and shorting connections provide good contact.

(2) Electrical Tests.

Verify proper operation by reviewing the meter configuration report.

3.2.2 System Functional Verification

Verify that the installed meters are working correctly in accordance with the meter configuration report:

a. The correct meter form is installed.

b. All voltage phases are present.

c. Phase rotation is correct.

d. Phase angles are correct.

e. The new meter accurately measures power magnitude and direction, and can communicate as required by paragraph entitled "Communications Interfaces".

-- End of Section --

THIS PAGE HAS BEEN INTENTIONALLY LEFT BLANK

SECTION 26 41 00

LIGHTNING PROTECTION SYSTEM
11/13

PART 1 GENERAL

1.1 REFERENCES

The publications listed below form a part of this specification to the extent referenced. The publications are referred to within the text by the basic designation only.

INSTITUTE OF ELECTRICAL AND ELECTRONICS ENGINEERS (IEEE)

IEEE 81	(2012) Guide for Measuring Earth Resistivity, Ground Impedance, and Earth Surface Potentials of a Ground System

NATIONAL FIRE PROTECTION ASSOCIATION (NFPA)

NFPA 70	(2014; AMD 1 2013; Errata 1 2013; AMD 2 2013; Errata 2 2013; AMD 3 2014; Errata 3-4 2014; AMD 4-6 2014) National Electrical Code
NFPA 780	(2014) Standard for the Installation of Lightning Protection Systems

UNDERWRITERS LABORATORIES (UL)

UL 467	(2007) Grounding and Bonding Equipment
UL 96	(2005; Reprint Sep 2013) Standard for Lightning Protection Components
UL Electrical Constructn	(2012) Electrical Construction Equipment Directory

1.2 RELATED REQUIREMENTS

1.2.1 Verification of Dimensions

Confirm all details of work, verify all dimensions in field, and advise Contracting Officer of any discrepancy before performing work. Obtain prior approval of Contracting Officer before making any departures from the design.

1.2.2 System Requirements

Provide a system furnished under this specification consisting of the latest UL Listed products of a manufacturer regularly engaged in production of lightning protection system components. Comply with NFPA 70, NFPA 780, and UL 96.

1.2.3 Lightning Protection System Installers Documentation

Provide documentation showing that the installer is certified with a

commercial third-party inspection company whose sole work is lightning protection, or is a UL Listed Lightning Protection Installer. In either case, the documentation must show that they have completed and passed the requirements for certification or listing, and have a minimum of 2 years documented experience installing lightning protection systems for DoD projects of similar scope and complexity.

1.3 SUBMITTALS

Government approval is required for submittals with a "G" designation; submittals not having a "G" designation are for Contractor Quality Control approval.. When used, a designation following the "G" designation identifies the office that will review the submittal for the Government. Submit the following in accordance with Section 01 33 00 SUBMITTAL PROCEDURES:

SD-02 Shop Drawings

Overall lightning protection system; G

Each major component; G

SD-06 Test Reports

Lightning Protection and Grounding System Test Plan; G

Lightning Protection and Grounding System Test; G

SD-07 Certificates

Lightning Protection System Installers Documentation; G

Component UL Listed and Labeled; G

Lightning protection system inspection certificate; G

Roof manufacturer's warranty; G

1.4 QUALITY ASSURANCE

In each standard referred to herein, consider the advisory provisions to be mandatory, as though the word "shall" or "must" has been substituted for "should" wherever it appears. Interpret references in these standards to "authority having jurisdiction," or words of similar meaning, to mean Contracting Officer.

1.4.1 Installation Drawings

1.4.1.1 Overall System Drawing

Submit installation shop drawing for the overall lightning protection system. Include on the drawings the physical layout of the equipment (plan view and elevations), mounting details, relationship to other parts of the work, and wiring diagrams.

1.4.1.2 Major Components

Submit detail drawings for each major component including manufacturer's descriptive and technical literature, catalog cuts, and installation

instructions.

1.4.2 Component UL Listed and Labeled

Submit proof of compliance that components are UL Listed and Labeled. Listing alone in UL Electrical Constructn, which is the UL Electrical Construction Directory, is not acceptable evidence. In lieu of Listed and Labeled, submit written certificate from an approved, nationally recognized testing organization equipped to perform such services, stating that items have been tested and conform to requirements and testing methods of Underwriters Laboratories.

1.4.3 Lightning Protection and Grounding System Test Plan

Provide a lightning protection and grounding system test plan. Detail both the visual inspection and electrical testing of the system and components in the test plan. Identify (number) the system test points/locations along with a listing or description of the item to be tested and the type of test to be conducted. As a minimum, include a sketch of the facility and surrounding lightning protection system as part of the specific test plan for each structure. Include the requirements specified in paragraph, "Testing of Integral Lightning Protection System" in the test plan.

1.4.4 Lightning Protection System Inspection Certificate

Provide certification from a commercial third-party inspection company whose sole work is lightning protection, stating that the lightning protection system complies with NFPA 780. Third party inspection company cannot be the system installer or the system designer. Alternatively, provide a UL Lightning Protection Inspection Master Label Certificate for each facility indicating compliance to NFPA 780.

Inspection must cover every connection, air terminal, conductor, fastener, accessible grounding point and other components of the lightning protection system to ensure 100% system compliance. This includes witnessing the tests for the resistance measurements for ground rods with test wells, and for continuity measurements for bonds. It also includes verification of proper surge protective devices for power, data and telecommunication systems. Random sampling or partial inspection of a facility is not acceptable.

1.5 SITE CONDITIONS

Confirm all details of work, verify all dimensions in field, and advise Contracting Officer of any discrepancy before performing work. Obtain prior approval of Contracting Officer before changing the design.

PART 2 PRODUCTS

2.1 MATERIALS

Do not use a combination of materials that forms an electrolytic couple of such nature that corrosion is accelerated in the presence of moisture unless moisture is permanently excluded from the junction of such metals. Where unusual conditions exist which would cause corrosion of conductors, provide conductors with protective coatings, such as tin or lead, or oversize conductors. Where a mechanical hazard is involved, increase conductor size to compensate for the hazard or protect conductors. When metallic conduit or tubing is provided, electrically bond conductor to

conduit or tubing at the upper and lower ends by clamp type connectors or welds (including exothermic). All lightning protection components, such as bonding plates, air terminals, air terminal supports and braces, chimney bands, clips, connector fittings, and fasteners are to comply with the requirements of UL 96 classes as applicable.

2.1.1 Main and Bonding Conductors

NFPA 780 and UL 96 Class I, Class II, or Class II modified materials as applicable.

2.1.2 Copper Only

Provide copper conductors, except where aluminum conductors are required for connection to aluminum equipment.

2.2 COMPONENTS

2.2.1 Air Terminals

Provide solid air terminals with a blunt tip. Tubular air terminals are not permitted. Support air terminals more than 24 inches in length by suitable brace, supported at not less than one-half the height of the terminal.

2.2.2 Ground Rods

Provide ground rods made of copper-clad steel conforming to conform to UL 467. Provide ground rods that are not less than 3/4 inch in diameter and 10 feet in length. Do not mix ground rods of copper-clad steel or solid copper on the job.

2.2.3 Connections and Terminations

Provide connectors for splicing conductors that conform to UL 96, class as applicable. Conductor connections can be made by clamps or welds (including exothermic). Provide style and size connectors required for the installation.

2.2.4 Connector Fittings

Provide connector fittings for "end-to-end", "Tee", or "Y" splices that conform to NFPA 780 and UL 96.

PART 3 EXECUTION

3.1 INTEGRAL SYSTEM

Provide a lightning protection system that meets the requirements of NFPA 780. Lightning protection system consists of air terminals, roof conductors, down conductors, ground connections, grounding electrodes, and ground ring electrode conductor. Expose conductors on the structures except where conductors are required to be in protective sleeves. Bond secondary conductors with grounded metallic parts within the building. Make interconnections within side-flash distances at or below the level of the grounded metallic parts.

3.1.1 Roof-Mounted Components

Coordinate with the roofing manufacturer and provide certification that the

roof manufacturer's warranty is not violated by the installation methods for air terminals and roof conductors.

3.1.1.1 Air Terminals

Use a standing seam base for installation of air terminals on a standing seam metal roof that does not produce any roof penetrations.

3.1.1.2 Roof Conductors

Use a standing seam base for installation of roof conductors on a standing seam metal roof that does not produce any roof penetrations.

3.1.2 Down Conductors

Protect exposed down conductors from physical damage as required by NFPA 780. Use Schedule 80 PVC to protect down conductors. Paint the Schedule 80 PVC to match the surrounding surface with paint that is approved for use on PVC.

3.1.3 Ground Connections

Attach each down conductor and ground ring electrode to ground rods by welding (including exothermic), brazing, or compression. All connections to ground rods below ground level must be by exothermic weld connection or with a high compression connection using a hydraulic or electric compression tool to provide the correct circumferential pressure. Accessible connections above ground level and in test wells can be accomplished by mechanical clamping.

3.1.4 Grounding Electrodes

Extend driven ground rods vertically into the existing undisturbed earth for a distance of not less 10 feet. Set ground rods not less than 3 feet nor more than 8 feet, from the structure foundation, and at least beyond the drip line for the facility. After the completed installation, measure the total resistance to ground using the fall-of-potential method described in IEEE 81. Maximum allowed resistance of a driven ground rod is 25 ohms, under normally dry conditions. Contact the Contracting Officer for direction on how to proceed when two of any three ground rods, driven not less than 10 feet into the ground, a minimum of 10 feet apart, and equally spaced around the perimeter, give a combined value exceeding 50 ohms immediately after having driven. For ground ring electrode, provide continuous No. 1/0 bare stranded copper cable. Lay ground ring electrode around the perimeter of the structure in a trench not less than 3 feet nor more than 8 feet from the nearest point of the structure foundation, and at least beyond the drip line for the facility. Install ground ring electrode to a minimum depth of 30 inches. Install a ground ring electrode in earth undisturbed by excavation, not earth fill, and do not locate beneath roof overhang, or wholly under paved areas or roadways where rainfall cannot penetrate to keep soil moist in the vicinity of the cable.

3.2 APPLICATIONS

3.2.1 Nonmetallic Exterior Walls with Metallic Roof

Bond metal roof sections together which are insulated from each other so that they are electrically continuous, having a surface contact of at least 3 square inches.

3.3 RESTORATION

Where sod has been removed, place sod as soon as possible after completing the backfilling. Restore, to original condition, the areas disturbed by trenching, storing of dirt, cable laying, and other work. Overfill to accommodate for settling. Include necessary topsoil, fertilizing, liming, seeding, sodding, sprigging or mulching in any restoration. Maintain disturbed surfaces and replacements until final acceptance.

3.4 FIELD QUALITY CONTROL

3.4.1 Lightning Protection and Grounding System Test

Test the lightning protection and grounding system to ensure continuity is not in excess of 1 ohm and that resistance to ground is not in excess of 25 ohms. Provide documentation for the measured values at each test point. Test the ground rod for resistance to ground before making connections to the rod. Tie the grounding system together and test for resistance to ground. Make resistance measurements in dry weather, not earlier than 48 hours after rainfall. Include in the written report: locations of test points, measured values for continuity and ground resistances, and soil conditions at the time that measurements were made. Submit results of each test to the Contracting Officer.

-- End of Section --

SECTION 26 51 00

INTERIOR LIGHTING
07/07

PART 1 GENERAL

1.1 REFERENCES

The publications listed below form a part of this specification to the extent referenced. The publications are referred to in the text by the basic designation only.

ASTM INTERNATIONAL (ASTM)

ASTM A641/A641M	(2009a) Standard Specification for Zinc-Coated (Galvanized) Carbon Steel Wire

CALIFORNIA ENERGY COMMISSION (CEC)

CEC Title 24	(2008; Effective Jan 2010) California's Energy Efficiency Standards for Residential and Nonresidential Buildings

GREEN SEAL (GS)

GS-12	(1997) Occupancy Sensors

ILLUMINATING ENGINEERING SOCIETY OF NORTH AMERICA (IES)

IES HB-10	(2011) IES Lighting Handbook

INSTITUTE OF ELECTRICAL AND ELECTRONICS ENGINEERS (IEEE)

IEEE 100	(2000; Archived) The Authoritative Dictionary of IEEE Standards Terms
IEEE C2	(2012; Errata 2012; INT 1-4 2012; INT 5-7 2013) National Electrical Safety Code
IEEE C62.41.1	(2002; R 2008) Guide on the Surges Environment in Low-Voltage (1000 V and Less) AC Power Circuits
IEEE C62.41.2	(2002) Recommended Practice on Characterization of Surges in Low-Voltage (1000 V and Less) AC Power Circuits

NATIONAL ELECTRICAL MANUFACTURERS ASSOCIATION (NEMA)

ANSI C78.901	(2005) American National Standard for Electric Lamps - Single Base Fluorescent Lamps--Dimensional and Electrical Characteristics
NEMA 250	(2008) Enclosures for Electrical Equipment (1000 Volts Maximum)

NEMA ANSLG C78.81	(2013) American National Standard for Electric Lamps--Double-Capped Fluorescent Lamps--Dimensional and Electrical Characteristics
NEMA ANSLG C82.11	(2011) Lamp Ballasts - High-Frequency Fluorescent Lamp Ballasts
NEMA ICS 6	(1993; R 2011) Enclosures
NEMA LL 1	(1997; R 2002) Procedures for Linear Fluorescent Lamp Sample Preparation and the TCLP Extraction

NATIONAL FIRE PROTECTION ASSOCIATION (NFPA)

NFPA 101	(2015; ERTA 2015) Life Safety Code
NFPA 70	(2014; AMD 1 2013; Errata 1 2013; AMD 2 2013; Errata 2 2013; AMD 3 2014; Errata 3-4 2014; AMD 4-6 2014) National Electrical Code
NFPA 90A	(2015) Standard for the Installation of Air Conditioning and Ventilating Systems

U.S. ENVIRONMENTAL PROTECTION AGENCY (EPA)

Energy Star	(1992; R 2006) Energy Star Energy Efficiency Labeling System (FEMP)

UNDERWRITERS LABORATORIES (UL)

UL 1598	(2008; Reprint Oct 2012) Luminaires
UL 773	(1995; Reprint Mar 2002) Standard for Plug-In, Locking Type Photocontrols for Use with Area Lighting
UL 773A	(2006; Reprint Nov 2013) Standard for Nonindustrial Photoelectric Switches for Lighting Control
UL 924	(2006; Reprint Feb 2011) Standard for Emergency Lighting and Power Equipment
UL 935	(2001; Reprint Dec 2013) Standard for Fluorescent-Lamp Ballasts

1.2 RELATED REQUIREMENTS

Materials not considered to be lighting equipment or lighting fixture accessories are specified in Section 26 20 00 INTERIOR DISTRIBUTION SYSTEM. Lighting fixtures and accessories mounted on exterior surfaces of buildings are specified in this section.

1.3 DEFINITIONS

a. Unless otherwise specified or indicated, electrical and electronics

terms used in these specifications, and on the drawings, shall be as defined in IEEE 100.

b. Average life is the time after which 50 percent will have failed and 50 percent will have survived under normal conditions.

c. Total harmonic distortion (THD) is the root mean square (RMS) of all the harmonic components divided by the total fundamental current.

1.4 SYSTEM DESCRIPTION

1.4.1 Lighting Control System

Provide lighting control system as indicated. Lighting control equipment shall include, if indicated: control modules, power packs, dimming ballasts, and occupancy sensors.

1.5 SUBMITTALS

Government approval is required for submittals with a "G" designation; submittals not having a "G" designation are for information only or as otherwise designated. When used, a designation following the "G" designation identifies the office that will review the submittal for the Government. The following shall be submitted in accordance with Section 01 33 00 SUBMITTAL PROCEDURES:

Data, drawings, and reports shall employ the terminology, classifications, and methods prescribed by the IES HB-10, as applicable, for the lighting system specified.

SD-03 Product Data

Fluorescent lighting fixtures; G

Fluorescent electronic ballasts; G

Fluorescent lamps; G

Time switch; G

Photocell switch; G

Exit signs; G

Emergency lighting equipment; G

Occupancy sensors; G

Electronic dimming ballast; G

Dimming ballast controls; G

Local/Regional Materials

Documentation indicating distance between manufacturing facility and the project site. Indicate distance of raw material origin from the project site. Indicate relative dollar value of local/regional materials to total dollar value of products included in project.

Energy Efficiency

SD-06 Test Reports

Operating test

Submit test results as stated in paragraph entitled "Field Quality Control."

SD-10 Operation and Maintenance Data

Lighting Control System, Data Package 5; G

Submit operation and maintenance data in accordance with Section 01 78 23 OPERATION AND MAINTENANCE DATA and as specified herein, showing all light fixtures, control modules, control zones, occupancy sensors, light level sensors, power packs, dimming ballasts, schematic diagrams and all interconnecting control wire, conduit, and associated hardware.

Operational Service

Submit documentation that includes contact information, summary of procedures, and the limitations and conditions applicable to the project. Indicate manufacturer's commitment to reclaim materials for recycling and/or reuse.

1.6 QUALITY ASSURANCE

1.6.1 Fluorescent Electronic Ballasts

Submit ballast catalog data as required in the paragraph entitled "Fluorescent Lamp Electronic Ballasts" contained herein. As an option, submit the fluorescent fixture manufacturer's electronic ballast specification information in lieu of the actual ballast manufacturer's catalog data. This information shall include published specifications and sketches, which covers the information required by the paragraph entitled "Fluorescent Lamp Electronic Ballasts" herein. This information may be supplemented by catalog data if required, and shall contain a list of vendors with vendor part numbers.

1.6.2 Regulatory Requirements

In each of the publications referred to herein, consider the advisory provisions to be mandatory, as though the word, "shall" had been substituted for "should" wherever it appears. Interpret references in these publications to the "authority having jurisdiction," or words of similar meaning, to mean the Contracting Officer. Equipment, materials, installation, and workmanship shall be in accordance with the mandatory and advisory provisions of NFPA 70 unless more stringent requirements are specified or indicated.

1.6.3 Standard Products

Provide materials and equipment that are products of manufacturers regularly engaged in the production of such products which are of equal material, design and workmanship. Products shall have been in satisfactory commercial or industrial use for 2 years prior to bid opening. The 2-year

period shall include applications of equipment and materials under similar circumstances and of similar size. The product shall have been on sale on the commercial market through advertisements, manufacturers' catalogs, or brochures during the 2-year period. Where two or more items of the same class of equipment are required, these items shall be products of a single manufacturer; however, the component parts of the item need not be the products of the same manufacturer unless stated in this section.

1.6.3.1 Alternative Qualifications

Products having less than a 2-year field service record will be acceptable if a certified record of satisfactory field operation for not less than 6000 hours, exclusive of the manufacturers' factory or laboratory tests, is furnished.

1.6.3.2 Material and Equipment Manufacturing Date

Products manufactured more than 3 years prior to date of delivery to site shall not be used, unless specified otherwise.

1.6.3.3 Energy Efficiency

Comply with National Energy Policy Act and Energy Star requirements for lighting products. Submit documentation for Energy Star qualifications for equipment provided under this section. Submit data indicating lumens per watt efficiency and color rendition index of light source.

1.7 WARRANTY

The equipment items shall be supported by service organizations which are reasonably convenient to the equipment installation in order to render satisfactory service to the equipment on a regular and emergency basis during the warranty period of the contract.

1.7.1 Electronic Ballast Warranty

Furnish the electronic ballast manufacturer's warranty. The warranty period shall not be less than 5 years from the date of manufacture of the electronic ballast. Ballast assembly in the lighting fixture, transportation, and on-site storage shall not exceed 12 months, thereby permitting 4 years of the ballast 5 year warranty to be in service and energized. The warranty shall state that the malfunctioning ballast shall be exchanged by the manufacturer and promptly shipped to the using Government facility. The replacement ballast shall be identical to, or an improvement upon, the original design of the malfunctioning ballast.

1.8 OPERATIONAL SERVICE

Coordinate with manufacturer for take-back program. Collect information from the manufacturer about maintenance agreement options, and submit to Contracting Officer. Services shall reclaim materials for recycling and/or reuse. Services shall not landfill or burn reclaimed materials. Indicate procedures for compliance with regulations governing disposal of mercury. When such a service is not available, local recyclers shall be sought after to reclaim the materials.

1.9 SUSTAINABLE DESIGN REQUIREMENTS

1.9.1 Local/Regional Materials

Use materials or products extracted, harvested, or recovered, as well as manufactured, within a 500 mile radius from the project site, if available from a minimum of three sources.

PART 2 PRODUCTS

2.1 FLUORESCENT LIGHTING FIXTURES

UL 1598. Fluorescent fixtures shall have electronic ballasts.

2.1.1 Fluorescent Lamp Electronic Ballasts

The electronic ballast shall as a minimum meet the following characteristics:

a. Ballast shall comply with UL 935, NEMA ANSLG C82.11, NFPA 70, and CEC Title 24 unless specified otherwise. Ballast shall be 100 percent electronic high frequency type with no magnetic core and coil components. Ballast shall provide transient immunity as recommended by IEEE C62.41.1 and IEEE C62.41.2. Ballast shall be designed for the wattage of the lamps used in the indicated application. Ballasts shall be designed to operate on the voltage system to which they are connected.

b. Power factor shall be 0.95 (minimum).

c. Ballast shall operate at a frequency of 20,000 Hertz (minimum). Ballast shall be compatible with and not cause interference with the operation of occupancy sensors or other infrared control systems. Provide ballasts operating at or above 40,000 Hertz where available.

d. Ballast shall have light regulation of plus or minus 10 percent lumen output with a plus or minus 10 percent input voltage regulation. Ballast shall have 10 percent flicker (maximum) using any compatible lamp.

e. Ballast factor shall be between 0.85 (minimum) and 1.00 (maximum). Current crest factor shall be 1.7 (maximum).

f. Ballast shall be UL listed Class P with a sound rating of "A."

g. Ballast shall have circuit diagrams and lamp connections displayed on the ballast.

h. Ballasts shall be programmed start unless otherwise indicated. Programmed start ballasts may operate lamps in a series circuit configuration. Provide series/parallel wiring for programmed start ballasts where available.

i. Ballasts for compact fluorescent fixtures shall be programmed start.

j. Ballasts for T-5 and smaller lamps shall have end-of-life protection circuits as required by NEMA ANSLG C78.81 and ANSI C78.901 as applicable.

k. Ballast shall be capable of starting and maintaining operation at a minimum of 0 degrees F unless otherwise indicated.

l. Electronic ballast shall have a full replacement warranty of 5 years from date of manufacture as specified in paragraph entitled "Electronic Ballast Warranty" herein.

2.1.1.1 T-8 Lamp Ballast

a. Total harmonic distortion (THD): Shall be 20 percent (maximum).

b. Input wattage.

1. 32 watts (maximum) when operating one F32T8 lamp

2. 62 watts (maximum) when operating two F32T8 lamps

3. 92 watts (maximum) when operating three F32T8 lamps

4. 114 watts (maximum) when operating four F32T8 lamps

c. Ballast efficacy factor.

1. 2.54 (minimum) when operating one F32T8 lamp

2. 1.44 (minimum) when operating two F32T8 lamps

3. 0.93 (minimum) when operating three F32T8 lamps

4. 0.73 (minimum) when operating four F32T8 lamps

2.1.1.2 F17T8 Lamp Ballast

a. Total harmonic distortion (THD): Shall be 25 percent (maximum).

b. Input wattage:

1. 34 watts (maximum) when operating two F17T8 lamps.

2.1.2 Fluorescent Lamp Electronic Dimming Ballast

The electronic ballast shall as a minimum meet the following characteristics:

a. Ballast shall comply with NEMA ANSLG C82.11, UL 935, and NFPA 70, unless specified otherwise. Ballast shall provide transient immunity as recommended by IEEE C62.41.1 and IEEE C62.41.2. Ballast dimming capability range shall be from 100 to 5 percent (minimum range) of light output, flicker free. Ballast shall start lamp at any preset light output setting without first having to go to full light output. Ballast shall be designed for the wattage of the lamps used in the indicated application. Ballasts shall be designed to operate on the voltage system to which they are connected.

b. Power factor shall be 0.95 (minimum) at full light output, and 0.90 (minimum) over the entire dimming range.

c. Ballast shall operate at a frequency of 20,000 Hertz (minimum). Ballast shall be compatible with and not cause interference with the

operation of occupancy sensors or other infrared control systems. Provide ballasts operating at or above 40,000 Hertz where available.

d. Ballast factor at full light output shall be between 0.85 (minimum) and 1.00 (maximum). Current crest factor shall be 1.7 (maximum).

e. Ballast shall be UL listed Class P with a sound rating of "A".

f. Ballast shall have circuit diagrams and lamp connections displayed on the ballast.

g. Ballast shall be programmed start. Ballast may operate lamps in a series circuit configuration. Provide series/parallel wiring for programmed start ballasts where available.

h. Ballasts for compact fluorescent fixtures shall be programmed start.

i. Ballast shall be capable of starting and maintaining operation at a minimum of 0 degrees F unless otherwise indicated.

j. Total harmonic distortion (THD): Shall be 20 percent (maximum) over the entire dimming range.

2.1.2.1 T-8 Lamp Ballast

Input wattage, for indicated lamp quantity shall be:

a. 35 watts (maximum) when operating one F32T8 lamp.

b. 70 watts (maximum) when operating two F32T8 lamps.

c. 104 watts (maximum) when operating three F32T8 lamps.

2.1.3 Dimming Ballast Controls

The dimming ballast controls shall be a slide dimmer with on/off control. The slide dimmer shall be compatible with the ballast and control the ballast light output over the full dimming range. Dimming ballast controls shall be approved by the ballast manufacturer.

2.1.4 Fluorescent Lamps

a. T-8 rapid start lamps shall be rated 32 watts (maximum), 2800 initial lumens (minimum), CRI of 75 (minimum), color temperature of 3500 K, and an average rated life of 20,000 hours. Low mercury lamps shall have passed the EPA Toxicity Characteristic Leachate Procedure (TCLP) for mercury by using the lamp sample preparation procedure described in NEMA LL 1.

b. T-8 rapid start lamp, 17 watt (maximum), nominal length of 24 inches, 1300 initial lumens, CRI of 75 (minimum), color temperature of 3500 K, and an average rated life of 20,000 hours.

c. Compact fluorescent lamps shall be: CRI 80, minimum, 3500 K, 10,000 hours average rated life, and as follows:

2. T-4, double twin tube, rated 26 watts, 1800 initial lumens (minimum),.

Average rated life is based on 3 hours operating per start.

2.1.5 Compact Fluorescent Fixtures

Compact fluorescent fixtures shall be manufactured specifically for compact fluorescent lamps with ballasts integral to the fixture. Providing assemblies designed to retrofit incandescent fixtures is prohibited except when specifically indicated for renovation of existing fixtures. Fixtures shall use lamps as indicated, with a minimum CRI of 80.

2.1.6 Open-Tube Fluorescent Fixtures

Provide with self-locking sockets, or lamp retainers (two per lamp).

2.1.7 Air Handling Fixtures

Fixtures used as air handling registers shall meet requirements of NFPA 90A.

2.1.8 Electromagnetic Interference Filters

Provide in each fluorescent fixture mounted in shielded enclosures..

2.2 INCANDESCENT LIGHTING FIXTURES

Use of incandescent lamps and fixtures is prohibited, unless specifically indicated otherwise. UL 1598.

2.3 RECESS- AND FLUSH-MOUNTED FIXTURES

Provide type that can be relamped from the bottom. Access to ballast shall be from the bottom. Trim for the exposed surface of flush-mounted fixtures shall be as indicated.

2.4 SUSPENDED FIXTURES

Provide hangers capable of supporting twice the combined weight of fixtures supported by hangers. Provide with swivel hangers to ensure a plumb installation. Hangers shall be cadmium-plated steel with a swivel-ball tapped for the conduit size indicated. Hangers shall allow fixtures to swing within an angle of 45 degrees. Brace pendants 4 feet or longer to limit swinging. Single-unit suspended fluorescent fixtures shall have twin-stem hangers. Multiple-unit or continuous row fluorescent fixtures shall have a tubing or stem for wiring at one point and a tubing or rod suspension provided for each unit length of chassis, including one at each end. Rods shall be a minimum 0.18 inch diameter.

2.5 SWITCHES

2.5.1 Toggle Switches

Provide toggle switches as specified in Section 26 20 00 INTERIOR DISTRIBUTION SYSTEM.

2.6 TIME SWITCH

Astronomic dial type or electronic type, arranged to dim at predetermined time between 8:30 p.m. and 2:30 a.m. , automatically changing the settings each day in accordance with seasonal changes of sunset and sunrise. Provide switch rated 277 volts, having automatically wound spring mechanism

or capacitor, to maintain accurate time for a minimum of 15 hours following power failure. Provide time switch with a manual on-off bypass switch. Housing for the time switch shall be surface-mounted, NEMA 3 enclosure conforming to NEMA ICS 6.

2.7 PHOTOCELL SWITCH

UL 773 or UL 773A, hermetically sealed cadmium-sulfide or silicon diode type cell rated 277 volts ac, 60 Hz with single-throw contacts. Switch shall turn on at or below 3 footcandles and off at 2 to 10 footcandles. A time delay shall prevent accidental switching from transient light sources. Provide switch:

a. Integral to the luminaire, rated 1000W minimum. Provide a directional lens in front of the cell to prevent fixed light sources from creating a turnoff condition.

2.8 EXIT SIGNS

UL 924, NFPA 70, and NFPA 101. Exit signs shall be self-powered type. Exit signs shall use no more than 5 watts.

2.8.1 Self-Powered LED Type Exit Signs (Battery Backup)

Provide with automatic power failure device, test switch, pilot light, integral self-testing module, and fully automatic high/low trickle charger in a self-contained power pack. Battery shall be sealed electrolyte type, shall operate unattended, and require no maintenance, including no additional water, for a period of not less than 5 years. LED exit sign shall have emergency run time of 1 1/2 hours (minimum). The light emitting diodes shall have rated lamp life of 70,000 hours (minimum).

2.9 EMERGENCY LIGHTING EQUIPMENT

UL 924, NFPA 70, and NFPA 101. Provide lamps in wattage indicated. Provide accessories required for remote-mounted lamps where indicated.

2.9.1 Emergency Lighting Unit

Provide as indicated. Emergency lighting units shall be rated for 12 volts, except units having no remote-mounted lamps and having no more than two unit-mounted lamps may be rated 6 volts. Provide integral self-testing module.

2.10 SELF-TESTING MODULE

Self-testing module for exit signs and emergency lighting equipment shall perform the following functions:

a. Continuous monitoring of charger operation and battery voltage with visual indication of normal operation and of malfunction.

b. Monthly discharge cycling of battery with monitoring of transfer circuit function, battery capacity and emergency lamp operation with visual indication of malfunction. The battery capacity test may be conducted by using a synthetic load.

c. Manual test switch to simulate a discharge test cycle.

d. Module shall have low voltage battery disconnect (LVD) and brown-out protection circuit.

2.11 OCCUPANCY SENSORS

UL listed. Comply with GS-12. Occupancy sensors and power packs shall be designed to operate on the voltage indicated. Sensors and power packs shall have circuitry that only allows load switching at or near zero current crossing of supply voltage. Occupancy sensor mounting as indicated. Sensor shall have an LED occupant detection indicator. Sensor shall have adjustable sensitivity and adjustable delayed-off time range of 5 minutes to 15 minutes. Wall mounted sensors shall match the color of adjacent wall plates as specified in Section 26 20 00 INTERIOR DISTRIBUTION SYSTEM, ceiling mounted sensors shall be white. Ceiling mounted sensors shall have 360 degree coverage unless otherwise indicated.

a. Ultrasonic/Infrared Combination Sensor

Sensors shall operate as a vacancy sensor. Lights must be manually turned on. Lights shall remain on if either the ultrasonic or infrared sensor detects movement. Infrared sensor shall have lens selected for indicated usage and daylight filter to prevent short wavelength infrared interference. Ultrasonic sensor frequency shall be crystal controlled.

2.12 SUPPORT HANGERS FOR LIGHTING FIXTURES IN SUSPENDED CEILINGS

2.12.1 Wires

ASTM A641/A641M, galvanized regular coating, soft temper, 0.1055 inches in diameter (12 gage).

2.13 EQUIPMENT IDENTIFICATION

2.13.1 Manufacturer's Nameplate

Each item of equipment shall have a nameplate bearing the manufacturer's name, address, model number, and serial number securely affixed in a conspicuous place; the nameplate of the distributing agent will not be acceptable.

2.13.2 Labels

Provide labeled luminaires in accordance with UL 1598 requirements. All luminaires shall be clearly marked for operation of specific lamps and ballasts according to proper lamp type. The following lamp characteristics shall be noted in the format "Use Only _____":

a. Lamp diameter code (T-8), tube configuration (twin, quad, triple), base type, and nominal wattage for fluorescent and compact fluorescent luminaires.

b. Start type (preheat, rapid start, instant start) for fluorescent and compact fluorescent luminaires.

c. Correlated color temperature (CCT) and color rendering index (CRI) for all luminaires.

All markings related to lamp type shall be clear and located to be readily

visible to service personnel, but unseen from normal viewing angles when lamps are in place. Ballasts shall have clear markings indicating multi-level outputs and indicate proper terminals for the various outputs.

2.14 FACTORY APPLIED FINISH

Electrical equipment shall have factory-applied painting systems which shall, as a minimum, meet the requirements of NEMA 250 corrosion-resistance test.

PART 3 EXECUTION

3.1 INSTALLATION

Electrical installations shall conform to IEEE C2, NFPA 70, and to the requirements specified herein.

3.1.1 Lamps

Lamps of the type, wattage, and voltage rating indicated shall be delivered to the project in the original cartons and installed just prior to project completion. Lamps installed and used for working light during construction shall be replaced prior to turnover to the Government if more than 15 percent of their rated life has been used. Lamps shall be tested for proper operation prior to turn-over and shall be replaced if necessary with new lamps from the original manufacturer. Provide 10 percent spare lamps of each type from the original manufacturer.

3.1.2 Lighting Fixtures

Set lighting fixtures plumb, square, and level with ceiling and walls, in alignment with adjacent lighting fixtures, and secure in accordance with manufacturers' directions and approved drawings. Installation shall meet requirements of NFPA 70. Mounting heights specified or indicated shall be to the bottom of fixture for ceiling-mounted fixtures and to center of fixture for wall-mounted fixtures. Obtain approval of the exact mounting for lighting fixtures on the job before commencing installation and, where applicable, after coordinating with the type, style, and pattern of the ceiling being installed. Recessed and semi-recessed fixtures shall be independently supported from the building structure by a minimum of four wires per fixture and located near each corner of each fixture. Ceiling grid clips are not allowed as an alternative to independently supported light fixtures. Round fixtures or fixtures smaller in size than the ceiling grid shall be independently supported from the building structure by a minimum of four wires per fixture spaced approximately equidistant around the fixture. Do not support fixtures by ceiling acoustical panels. Where fixtures of sizes less than the ceiling grid are indicated to be centered in the acoustical panel, support such fixtures independently and provide at least two 3/4 inch metal channels spanning, and secured to, the ceiling tees for centering and aligning the fixture. Provide wires for lighting fixture support in this section. Lighting fixtures installed in suspended ceilings shall also comply with the requirements of Section 09 51 00 ACOUSTICAL CEILINGS.

3.1.3 Suspended Fixtures

Suspended fixtures shall be provided with 45 degree swivel hangers so that they hang plumb and shall be located with no obstructions within the 45 degree range in all directions. The stem, canopy and fixture shall be

capable of 45 degree swing. Pendants, rods, or chains 4 feet or longer excluding fixture shall be braced to prevent swaying using three cables at 120 degree separation. Suspended fixtures in continuous rows shall have internal wireway systems for end to end wiring and shall be properly aligned to provide a straight and continuous row without bends, gaps, light leaks or filler pieces. Aligning splines shall be used on extruded aluminum fixtures to assure hairline joints. Steel fixtures shall be supported to prevent "oil-canning" effects. Fixture finishes shall be free of scratches, nicks, dents, and warps, and shall match the color and gloss specified. Pendants shall be finished to match fixtures. Aircraft cable shall be stainless steel. Canopies shall be finished to match the ceiling and shall be low profile unless otherwise shown. Maximum distance between suspension points shall be 10 feet or as recommended by the manufacturer, whichever is less.

3.1.4 Ballasts

3.1.4.1 Electronic Dimming Ballasts

All electronic dimming ballasts controlled by the same controller shall be of the same manufacturer. All fluorescent lamps on electronic dimming ballast control shall be seasoned or burned in at full light output for 100 hours before dimming.

3.1.5 Exit Signs and Emergency Lighting Units

Wire exit signs and emergency lighting units ahead of the switch to the normal lighting circuit located in the same room or area.

3.1.6 Occupancy Sensor

Provide quantity of sensor units indicated as a minimum. Provide additional units to give full coverage over controlled area. Full coverage shall provide hand and arm motion detection for office and administration type areas and walking motion for storage rooms and hallways. Provide vacancy sensors in office spaces and as indicated. Locate the sensor(s) as indicated and in accordance with the manufacturer's recommendations to maximize energy savings and to avoid nuisance activation and deactivation due to sudden temperature or airflow changes and usage. Set sensor "on" duration to 30 minutes.

3.2 FIELD APPLIED PAINTING

Paint electrical equipment as required to match finish of adjacent surfaces or to meet the indicated or specified safety criteria. Painting shall be as specified in Section 09 90 00 PAINTS AND COATINGS.

3.3 FIELD QUALITY CONTROL

Upon completion of installation, verify that equipment is properly installed, connected, and adjusted. Conduct an operating test to show that equipment operates in accordance with requirements of this section.

3.3.1 Electronic Dimming Ballast

Test for full range of dimming capability. Observe for visually detectable

flicker over full dimming range.

3.3.2 Occupancy Sensor

Test sensors for proper operation. Observe for light control over entire area being covered.

-- End of Section --

SECTION 26 56 00

EXTERIOR LIGHTING
05/13

PART 1 GENERAL

1.1 REFERENCES

The publications listed below form a part of this specification to the extent referenced. The publications are referred to in the text by the basic designation only.

AMERICAN ASSOCIATION OF STATE HIGHWAY AND TRANSPORTATION OFFICIALS (AASHTO)

AASHTO LTS	(2013; Errata 2013) Standard Specifications for Structural Supports for Highway Signs, Luminaires and Traffic Signals

AMERICAN SOCIETY OF HEATING, REFRIGERATING AND AIR-CONDITIONING ENGINEERS (ASHRAE)

ASHRAE 90.1 - IP	(2010; Errata 1-4 2011; INT 1-12 2011; Addenda A, B, C, G, H, J, K, O, P, S, Y, Z, BZ, CG, CI and DS 2012; Errata 5-9 2012; INT 13-16 2012; Errata 10-12 2013; INT 17-18 2013) Energy Standard for Buildings Except Low-Rise Residential Buildings

ASTM INTERNATIONAL (ASTM)

ASTM B117	(2011) Standard Practice for Operating Salt Spray (Fog) Apparatus
ASTM C1089	(2013) Standard Specification for Spun Cast Prestressed Concrete Poles

CALIFORNIA ENERGY COMMISSION (CEC)

CEC Title 24	(2008; Effective Jan 2010) California's Energy Efficiency Standards for Residential and Nonresidential Buildings

ILLUMINATING ENGINEERING SOCIETY OF NORTH AMERICA (IES)

IES HB-10	(2011) IES Lighting Handbook
IES LM-79	(2008) Electrical and Photometric Measurements of Solid-State Lighting Products
IES LM-80	(2008) Measuring Lumen Maintenance of LED Light Sources
IES RP-16	(2010; Addendum A 2008; Addenda B & C

	2009) Nomenclature and Definitions for Illuminating Engineering
IES RP-8	(2000; Errata 2004; R 2005; Errata 2007) Roadway Lighting
IES TM-15	(2011) Luminaire Classification System for Outdoor Luminaires
IES TM-21	(2011) Projecting Long Term Lumen Maintenance of LED Light Sources

INSTITUTE OF ELECTRICAL AND ELECTRONICS ENGINEERS (IEEE)

IEEE 100	(2000; Archived) The Authoritative Dictionary of IEEE Standards Terms
IEEE C2	(2012; Errata 2012; INT 1-4 2012; INT 5-7 2013) National Electrical Safety Code
IEEE C62.41.2	(2002) Recommended Practice on Characterization of Surges in Low-Voltage (1000 V and Less) AC Power Circuits

NATIONAL ELECTRICAL MANUFACTURERS ASSOCIATION (NEMA)

ANSI C136.13	(2004; R 2009) American National Standard for Roadway Lighting Equipment, Metal Brackets for Wood Poles
ANSI C136.21	(2004; R 2009) American National Standard for Roadway and Area Lighting Equipment - Vertical Tenons Used with Post-Top-Mounted Luminaires
ANSI C136.3	(2005; R 2009) American National Standard for Roadway and Area Lighting Equipment Luminaire Attachments
NEMA 250	(2008) Enclosures for Electrical Equipment (1000 Volts Maximum)
NEMA ANSLG C78.377	(2011) American National Standard for Electric Lamps— Specifications for the Chromaticity of Solid State Lighting Products
NEMA C136.10	(2010) American National Standard for Roadway and Area Lighting Equipment-Locking-Type Photocontrol Devices and Mating Receptacles--Physical and Electrical Interchangeability and Testing
NEMA C136.31	(2010) American National for Roadway and Area Lighting Equipment - Luminaire Vibration
NEMA C82.77	(2002) Harmonic Emission Limits - Related

	Power Quality Requirements for Lighting Equipment
NEMA ICS 2	(2000; R 2005; Errata 2008) Standard for Controllers, Contactors, and Overload Relays Rated 600 V
NEMA IEC 60529	(2004) Degrees of Protection Provided by Enclosures (IP Code)
NEMA WD 7	(2011) Occupancy Motion Sensors Standard

NATIONAL FIRE PROTECTION ASSOCIATION (NFPA)

NFPA 70	(2014; AMD 1 2013; Errata 1 2013; AMD 2 2013; Errata 2 2013; AMD 3 2014; Errata 3-4 2014; AMD 4-6 2014) National Electrical Code

U.S. NATIONAL ARCHIVES AND RECORDS ADMINISTRATION (NARA)

47 CFR 15	Radio Frequency Devices

UNDERWRITERS LABORATORIES (UL)

UL 1310	(2011; Reprint Oct 2013) UL Standard for Safety Class 2 Power Units
UL 1598	(2008; Reprint Oct 2012) Luminaires
UL 773	(1995; Reprint Mar 2002) Standard for Plug-In, Locking Type Photocontrols for Use with Area Lighting
UL 773A	(2006; Reprint Nov 2013) Standard for Nonindustrial Photoelectric Switches for Lighting Control
UL 8750	(2009; Reprint Sep 2013) UL Standard for Safety Light Emitting Diode (LED) Equipment for Use in Lighting Products
UL 916	(2007; Reprint Aug 2014) Standard for Energy Management Equipment

1.2 RELATED REQUIREMENTS

Materials not considered to be luminaires or lighting equipment are specified in Section(s) 33 71 02 UNDERGROUND ELECTRICAL DISTRIBUTION 33 71 01 OVERHEAD TRANSMISSION AND DISTRIBUTION. Luminaires and accessories installed in interior of buildings are specified in Section 26 51 00 INTERIOR LIGHTING .

1.3 DEFINITIONS

a. Unless otherwise specified or indicated, electrical and electronics terms used in these specifications, and on the drawings shall be as defined in IEEE 100 and IES RP-16.

a. For LED luminaire light sources, "Useful Life" is the operating hours before reaching 70 percent of the initial rated lumen output (L70) with no catastrophic failures under normal operating conditions. This is also known as 70 percent "Rated Lumen Maintenance Life" as defined in IES LM-80.

1.4 SUBMITTALS

Government approval is required for submittals with a "G" designation; submittals not having a "G" designation are for Contractor Quality Control approval . The following shall be submitted in accordance with Section 01 33 00 SUBMITTAL PROCEDURES:

SD-01 Preconstruction Submittals

Photometric Plan

LED Luminaire Warranty; G

SD-02 Shop Drawings

Luminaire drawings; G

Poles; G

SD-03 Product Data

LED Luminaires; G

Luminaire Light Sources; G

Luminaire Power Supply Units (Drivers); G

Lighting contactor; G

Lighting Control Relay Panel; G

Motion Sensor; G

Photocell; G

Concrete poles; G

Brackets

SD-05 Design Data

Design Data for luminaires; G

SD-06 Test Reports

LED Luminaire - IES LM-79 Test Report; G

LED Light Source - IES LM-80 Test Report; G

Operating test

Submit operating test results as stated in paragraph entitled "Field Quality Control."

SD-07 Certificates

Luminaire Useful Life Certificate; G

Submit certification from the manufacturer indicating the expected useful life of the luminaires provided. The useful life shall be directly correlated from the IES LM-80 test data using procedures outlined in IES TM-21. Thermal properties of the specific luminaire and local ambient operating temperature and conditions shall be taken into consideration.

SD-08 Manufacturer's Instructions

Concrete poles

Submit instructions prior to installation.

SD-10 Operation and Maintenance Data

Operational Service

Submit documentation that includes contact information, summary of procedures, and the limitations and conditions applicable to the project. Indicate manufacturer's commitment to reclaim materials for recycling and/or reuse.

1.5 QUALITY ASSURANCE

1.5.1 Drawing Requirements

1.5.1.1 Luminaire Drawings

Include dimensions, effective projected area (EPA), accessories, and installation and construction details. Photometric data, including zonal lumen data, average and minimum ratio, aiming diagram, and computerized candlepower distribution data shall accompany shop drawings.

1.5.1.2 Poles

Include dimensions, wind load determined in accordance with AASHTO LTS, pole deflection, pole class, and other applicable information. For concrete poles, include: section and details to indicate quantities and position of prestressing steel, spiral steel, inserts, and through holes; initial prestressing steel tension; and concrete strengths at release and at 28 days.

1.5.2 Photometric Plan

For LED luminaires, include computer-generated photometric analysis of the "designed to" values for the "end of useful life" of the luminaire installation using a light loss factor of 0.7. For LED and all other types of luminaires, the submittal shall include the following:

Horizontal illuminance measurements at finished grade, taken at a maximum of every 10 feet.

Vertical illuminance measurements at 5 feet above finished grade.

Minimum and maximum footcandle levels.

Average maintained footcandle level.

Maximum to minimum ratio for horizontal illuminance only.

1.5.3 Design Data for Luminaires

a. Provide distribution data according to IES classification type as defined in IES HB-10.

b. Shielding as defined by IES RP-8 or B.U.G. rating for the installed position as defined by IES TM-15.

c. Provide safety certification and file number for the luminaire family. Include listing, labeling and identification per NFPA 70 (NEC). Applicable testing bodies are determined by the US Occupational Safety Health Administration (OSHA) as Nationally Recognized Testing Laboratories (NRTL) and include: CSA (Canadian Standards Association), ETL (Edison Testing Laboratory), and UL (Underwriters Laboratories).

d. Provide long term lumen maintenance projections for each LED luminaire in accordance with IES TM-21. Data used for projections shall be obtained from testing in accordance with IES LM-80.

e. Provide wind loading calculations for luminaires mounted on poles. Weight and effective projected area (EPA) of luminaires and mounting brackets shall not exceed maximum rating of pole as installed in particular wind zone area.

1.5.4 LED Luminaire - IES LM-79 Test Report

Submit test report on manufacturer's standard production model luminaire. Submittal shall include all photometric and electrical measurements, as well as all other pertinent data outlined under "14.0 Test Report" in IES LM-79.

1.5.5 LED Light Source - IES LM-80 Test Report

Submit report on manufacturer's standard production LED package, array, or module. Submittal shall include:

a. Testing agency, report number, date, type of equipment, and LED light source being tested.

b. All data required by IES LM-80.

1.5.5.1 Test Laboratories

Test laboratories for the IES LM-79 and IES LM-80 test reports shall be one of the following:

a. National Voluntary Laboratory Accreditation Program (NVLAP) accredited for solid-state lighting testing as part of the Energy-Efficient Lighting Products laboratory accreditation program.

b. One of the qualified labs listed on the Department of Energy - Energy Efficiency & Renewable Energy, Solid-State Lighting web site.

c. A manufacturer's in-house lab that meets the following criteria:

1. Manufacturer has been regularly engaged in the design and production of high intensity discharge roadway and area luminaires and the manufacturer's lab has been successfully certifying these fixtures for a minimum of 15 years.

2. Annual equipment calibration including photometer calibration in accordance with National Institute of Standards and Technology.

1.5.6 Regulatory Requirements

In each of the publications referred to herein, consider the advisory provisions to be mandatory, as though the word, "shall" had been substituted for "should" wherever it appears. Interpret references in these publications to the "authority having jurisdiction," or words of similar meaning, to mean the Contracting Officer. Equipment, materials, installation, and workmanship shall be in accordance with the mandatory and advisory provisions of NFPA 70 unless more stringent requirements are specified or indicated.

1.5.7 Standard Products

Provide materials and equipment that are products of manufacturers regularly engaged in the production of such products which are of equal material, design and workmanship. Products shall have been in satisfactory commercial or industrial use for 2 years prior to bid opening. The 2-year period shall include applications of equipment and materials under similar circumstances and of similar size. The product shall have been on sale on the commercial market through advertisements, manufacturers' catalogs, or brochures during the 2-year period. Where two or more items of the same class of equipment are required, these items shall be products of a single manufacturer; however, the component parts of the item need not be the products of the same manufacturer unless stated in this section.

1.5.7.1 Alternative Qualifications

Products having less than a 2-year field service record will be acceptable if the manufacturer has been regularly engaged in the design and production of high intensity discharge roadway and area luminaires for a minimum of 15 years. Products shall have been in satisfactory commercial or industrial use for 15 years prior to bid opening. The product shall have been on sale on the commercial market through advertisements, manufacturers' catalogs, or brochures during the 15-year period.

1.5.7.2 Material and Equipment Manufacturing Date

Products manufactured more than 1 year prior to date of delivery to site shall not be used, unless specified otherwise.

1.6 DELIVERY, STORAGE, AND HANDLING OF POLES

1.6.1 Concrete Poles

Do not store poles on ground. Support poles so they are at least one foot above ground level and growing vegetation.

1.7 WARRANTY

The equipment items shall be supported by service organizations which are reasonably convenient to the equipment installation in order to render satisfactory service to the equipment on a regular and emergency basis during the warranty period of the contract.

1.7.1 LED Luminaire Warranty

Provide Luminaire Useful Life Certificate.

The equipment items shall be supported by service organizations which are reasonably convenient to the equipment installation in order to render satisfactory service to the equipment on a regular and emergency basis during the warranty period of the contract.

a. Provide a written five year on-site replacement warranty for material, fixture finish, and workmanship. On-site replacement includes transportation, removal, and installation of new products.

   1. Finish warranty shall include warranty against failure and against substantial deterioration such as blistering, cracking, peeling, chalking, or fading.

   2. Material warranty shall include:

      (a) All power supply units (drivers).

      (b) Replacement when more than 10 percent of LED sources in any lightbar or subassembly(s) are defective or non-starting.

b. Warranty period must begin on date of beneficial occupancy. Contractor shall provide the Contracting Officer signed warranty certificates prior to final payment.

1.8 OPERATIONAL SERVICE

Coordinate with manufacturer for take-back program. Collect information from the manufacturer about maintenance agreement options, and submit to Contracting Officer. Services shall reclaim materials for recycling and/or reuse. Services shall not deposit materials in landfills or burn reclaimed materials. Indicate procedures for compliance with regulations governing disposal of mercury. When such a service is not available, local recyclers shall be sought after to reclaim the materials.

PART 2 PRODUCTS

2.1 PRODUCT COORDINATION

Products and materials not considered to be luminaires, equipment or accessories are specified in Section 33 71 02 UNDERGROUND ELECTRICAL DISTRIBUTION, Section 33 71 01 OVERHEAD TRANSMISSION AND DISTRIBUTION, and Section 26 20 00 INTERIOR DISTRIBUTION SYSTEM. Luminaires and associated equipment and accessories for interior applications are specified in Section 26 51 00 INTERIOR LIGHTING.

2.2 LED LUMINAIRES

UL 1598, NEMA C82.77 and UL 8750. Provide luminaires as indicated in

luminaire schedule and XL plates or details on project plans. Provide luminaires complete with light sources of quantity, type, and wattage indicated. All luminaires of the same type shall be provided by the same manufacturer.

2.2.1 General Requirements

a. LED luminaire housings shall be die cast or extruded aluminum.

b. LED luminaires shall be rated for operation within an ambient temperature range of minus 22 degrees F to 104 degrees F.

c. Luminaires shall be UL listed for wet locations per UL 1598. Optical compartment for LED luminaires shall be sealed and rated a minimum of IP65 per NEMA IEC 60529.

d. LED luminaires shall produce a minimum efficacy as shown in the following table, tested per IES LM-79. Theoretical models of initial raw LED lumens per watt are not acceptable.

Application	Luminaire Efficacy in Lumens per Watt
Exterior Pole/Arm-Mounted Area and Roadway Luminaires	65
Exterior Pole/Arm-Mounted Decorative Luminaires	65
Exterior Wall-Mounted Area Luminaires	60
Bollards	35
Parking Garage Luminaires	70

e. Luminaires shall have IES distribution and NEMA field angle classifications as indicated in luminaire schedule on project plans per IES HB-10.

f. Housing finish shall be baked-on enamel, anodized, or baked-on powder coat paint. Finish shall be capable of surviving ASTM B117 salt fog environment testing for 2500 hours minimum without blistering or peeling.

g. Luminaires shall not exceed the following IES TM-15 Backlight, Uplight and Glare (B.U.G.) ratings:

1. Maximum Backlight (B) rating shall be determined by lighting zone in which luminaire is placed.

2. Maximum Uplight (U) rating shall be U0.

3. Maximum Glare (G) rating shall be determined by lighting zone in which luminaire is placed.

h. Luminaires shall be fully assembled and electrically tested prior to shipment from factory.

i. The finish color shall be as indicated in the luminaire schedule or detail on the project plans.

j. Luminaire arm bolts shall be 304 stainless steel or zinc-plated steel.

k. Luminaire lenses shall be constructed of clear tempered glass or UV-resistant acrylic.

l. The wiring compartment on pole-mounted, street and area luminaires must be accessible without the use of hand tools to manipulate small screws, bolts, or hardware.

m. Incorporate modular electrical connections, and construct luminaires to allow replacement of all or any part of the optics, heat sinks, power supply units, ballasts, surge suppressors and other electrical components using only a simple tool, such as a manual or cordless electric screwdriver.

n. Luminaires shall have a nameplate bearing the manufacturer's name, address, model number, date of manufacture, and serial number securely affixed in a conspicuous place. The nameplate of the distributing agent will not be acceptable.

o. Roadway and area luminaires shall have an integral tilt adjustment of plus or minus 5 degrees to allow the unit to be leveled in accordance with ANSI C136.3.

p. Luminaire must pass 3G vibration testing in accordance with NEMA C136.31.

q. All factory electrical connections shall be made using crimp, locking, or latching style connectors. Twist-style wire nuts are not acceptable.

2.2.2 Luminaire Light Sources

2.2.2.1 LED Light Sources

a. Correlated Color Temperature (CCT) shall be in accordance with NEMA ANSLG C78.377:

Nominal CCT: 4000 degrees K: 3985 plus or minus 275 degrees K

b. Color Rendering Index (CRI) shall be:

Greater than or equal to 70 for 4000 degrees K light sources.

c. Color Consistency:

Manufacturer shall utilize a maximum 4-step MacAdam ellipse binning tolerance for color consistency of LEDs used in luminaires.

2.2.3 Luminaire Power Supply Units (Drivers)

2.2.3.1 LED Power Supply Units (Drivers)

UL 1310. LED Power Supply Units (Drivers) shall meet the following requirements:

a. Minimum efficiency shall be 85 percent.

b. Drive current to each individual LED shall not exceed 600 mA, plus or minus 10 percent.

c. Shall be rated to operate between ambient temperatures of minus 22 degrees F and 104 degrees F.

d. Shall be designed to operate on the voltage system to which they are connected, typically ranging from 120 V to 480 V nominal.

e. Operating frequency shall be: 60 Hz.

f. Power Factor (PF) shall be greater than or equal to 0.90.

g. Total Harmonic Distortion (THD) current shall be less than or equal to 20 percent.

h. Shall meet requirements of 47 CFR 15, Class B.

i. Shall be RoHS-compliant.

j. Shall be mounted integral to luminaire. Remote mounting of power supply is not allowed.

k. Power supplies in luminaires mounted under a covered structure, such as a canopy, or where otherwise appropriate shall be UL listed with a sound rating of A.

l. Shall be dimmable, and compatible with a standard dimming control circuit of 0 - 10V or other approved dimming system.

m. Shall be equipped with over-temperature protection circuit that turns light source off until normal operating temperature is achieved.

2.2.4 LED Luminaire Surge Protection

Provide surge protection integral to luminaire to meet C Low waveforms as defined by IEEE C62.41.2, Scenario 1, Location Category C.

2.3 EXTERIOR LUMINAIRE CONTROLS

Controls shall comply with Section 9 of ASHRAE 90.1 - IP .

2.3.1 Photocell

UL 773 or UL 773A. Photocells shall be hermetically sealed, cadmium sulfide light sensor type, rated at 1000 watts, 277 volts, 50/60 Hz with single-pole, single-throw contacts. Photocell shall be designed to fail to the ON position. Housing shall be constructed of polycarbonate , rated to operate within a temperature range of minus 40 to 158 degrees F. Photocell shall be twist-lock receptacle type conforming to NEMA C136.10. Provide with solid brass prongs and voltage markings and color coding on exterior of housing. Photocell shall turn on at 1-3 footcandles and turn off at 3 to 15 footcandles. A time delay shall prevent accidental switching from transient light sources. Provide a directional lens in front of the cell to prevent fixed light sources from creating a turnoff condition.

2.3.2 Lighting Contactor

NEMA ICS 2. Provide a electrically-held lighting contactor housed in a NEMA 3R enclosure conforming to NEMA ICS 6. Contactor shall have 6 poles, configured as normally open (NO). Contacts shall be rated 600 volts, 30 amperes for a resistive load. Coil operating voltage shall be 277 volts. Contactor shall have silver cadmium oxide double-break contacts and shall require no arcing contacts. Provide contactor with hand-off-automatic on-off selector switch. Provide contactor as specified above along with disconnect switch in integral NEMA 3R enclosure with flange-mounted handle to satisfy requirement for a "combination lighting contactor" when specified.

2.3.3 Lighting Control Relay Panel

Panel shall consist of a single NEMA 3R surface-mounted enclosure with two separate interior sections; one for Class 1 (branch circuit) and one for Class 2 (low voltage) wiring. Provide panel with 16 relays. Panel shall be designed as a stand alone type. The Class 1 section shall contain the load side of all relays and the incoming branch circuit wiring. The Class 2 section shall contain the control power transformer (24 volt output), relays, relay control modules, and control wiring. Panel enclosure shall be constructed of 16 gauge cold-rolled steel with baked-on enamel finish. Panel shall meet requirements of UL 916, ASHRAE 90.1 - IP, CEC Title 24 and 47 CFR 15.

Relays shall be 2-pole, rated at 20 amperes 480 VAC with rated life of 120,000 mechanical operations minimum.

Relay control module shall be 24 volt, electronic type and control up to 16 separate relays (16 channel) or programmed groups of relays. Provide with inputs for signals from devices such as photocells, timeclocks, and motion sensors.

2.3.4 Motion Sensor

NEMA WD 7, UL 773A. Provide passive infrared type sensors with 270 degree coverage, time delay that can be adjusted from 15 seconds to 15 minutes, and "fail to ON position" default state. Sensors shall be located to achieve coverage of areas as indicated on project plans. Coverage patterns shall be derated as recommended by manufacturer based on mounting height of sensor and any obstructions such as trees. Do not use gross rated coverage in manufacturer's product literature. Sensors installed integral to the luminaire must be provided by the luminaire manufacturer. Sensors shall have an integral light level sensor that does not allow luminaires to operate during daylight hours and shall be designed to operate on a voltage of 120/277 VAC. Provide sensors to operate in conjunction with bi-level controllers that lower HID or LED luminaires to a 50 percent output. Sensor shall be mounted directly to luminaire.

2.4 POLES

Provide poles designed for wind loading of 130 miles per hour determined in accordance with AASHTO LTS while supporting luminaires and all other appurtenances indicated. The effective projected areas of luminaires and appurtenances used in calculations shall be specific for the actual products provided on each pole. Poles shall be embedded-base type designed for use with underground supply conductors. Poles shall have oval-shaped handhole having a minimum clear opening of 2.5 by 5 inches. Handhole cover

shall be secured by stainless steel captive screws. Scratched, stained, chipped, or dented poles shall not be installed.

2.4.1 Concrete Poles

Provide concrete poles conforming to ASTM C1089. Cross-sectional shape shall be round.

2.4.1.1 Steel Reinforcing

Prestressed concrete pole shafts shall be reinforced with steel prestressing members. Design shall provide internal longitudinal loading by either pretensioning or post tensioning of longitudinal reinforcing members.

2.4.1.2 Tensioned Reinforcing

Primary reinforcement steel used for a prestressed concrete pole shaft shall be tensioned between 60 to 70 percent of its ultimate strength. The amount of reinforcement shall be such that when reinforcement is tensioned to 70 percent of its ultimate strength, the total resultant tensile force does not exceed the minimum section compressive strength of the concrete.

2.4.1.3 Coating and Sleeves for Reinforcing Members

Where minimum internal coverage cannot be maintained next to required core openings, such as handhole and wiring inlet, reinforcing shall be protected with a vaporproof noncorrosive sleeve over the length without the 1/2 inch concrete coverage. Each steel reinforcing member which is to be post-tensioned shall have a nonmigrating slipper coating applied prior to the addition of concrete to ensure uniformity of stress throughout the length of such member.

2.4.1.4 Strength Requirement

As an exception to the requirements of ASTM C1089, poles shall be naturally cured to achieve a 28-day compressive strength of 7000 psi. Poles shall not be subjected to severe temperature changes during the curing period.

2.4.1.5 Shaft Preparation

Completed prestressed concrete pole shaft shall have a hard, smooth, nonporous surface that is resistant to soil acids, road salts, and attacks of water and frost, and shall be clean, smooth, and free of surface voids and internal honeycombing. Poles shall not be installed for at least 15 days after manufacture.

2.5 BRACKETS AND SUPPORTS

ANSI C136.3, ANSI C136.13, and ANSI C136.21, as applicable. Pole brackets shall be not less than 1 1/4 inch galvanized steel pipe secured to pole. Slip-fitter or pipe-threaded brackets may be used, but brackets shall be coordinated to luminaires provided, and brackets for use with one type of luminaire shall be identical. Brackets for pole-mounted street lights shall correctly position luminaire no lower than mounting height indicated. Mount brackets not less than 24 feet above street. Special mountings or brackets shall be as indicated and shall be of metal which will not promote galvanic reaction with luminaire head.

2.6 POLE FOUNDATIONS

Concrete shall be as specified in Section 03 30 00 CAST-IN-PLACE CONCRETE.

2.7 EQUIPMENT IDENTIFICATION

2.7.1 Manufacturer's Nameplate

Each item of equipment shall have a nameplate bearing the manufacturer's name, address, model number, and serial number securely affixed in a conspicuous place; the nameplate of the distributing agent will not be acceptable.

2.7.2 Labels

Provide labeled luminaires in accordance with UL 1598 requirements. Luminaires shall be clearly marked for operation of specific light sources and ballasts according to proper light source type. The following light source characteristics shall be noted in the format "Use Only _____":

a. Light source type, wattage, and coating (clear or coated) for LED luminaires.

b. Correlated color temperature (CCT) and color rendering index (CRI) for all luminaires.

Markings related to lamp type shall be clear and located to be readily visible to service personnel, but unseen from normal viewing angles when lamps are in place.

2.8 FACTORY APPLIED FINISH

Electrical equipment shall have factory-applied painting systems which shall, as a minimum, meet the requirements of NEMA 250 corrosion-resistance test.

PART 3 EXECUTION

3.1 INSTALLATION

Electrical installations shall conform to IEEE C2, NFPA 70, and to the requirements specified herein.

3.1.1 Concrete Poles

Install according to pole manufacturer's instructions.

3.1.2 Pole Setting

Poles in straight runs shall be in a straight line. Dig holes large enough to permit the proper use of tampers to the full depth of the hole. Place backfill in the hole in 6 inch maximum layers and thoroughly tamp. Place surplus earth around the pole in a conical shape and pack tightly to drain water away.

3.1.3 Photocell Switch Aiming

Aim switch according to manufacturer's recommendations. Mount switch on or beside each luminaire when switch is provided in cast weatherproof aluminum

housing with swivel arm.

3.1.4 GROUNDING

Ground noncurrent-carrying parts of equipment including luminaires, mounting arms, brackets, and metallic enclosures as specified in Section 33 71 02 UNDERGROUND ELECTRICAL DISTRIBUTION. Where copper grounding conductor is connected to a metal other than copper, provide specially treated or lined connectors suitable for this purpose.

3.1.5 FIELD APPLIED PAINTING

Paint electrical equipment as required to match finish of adjacent surfaces or to meet the indicated or specified safety criteria. Painting shall be as specified in Section 09 90 00 PAINTS AND COATINGS.

3.2 FIELD QUALITY CONTROL

Upon completion of installation, verify that equipment is properly installed, connected, and adjusted. Conduct an operating test after 100 hours of burn-in time to show that the equipment operates in accordance with the requirements of this section.

-- End of Section --

THIS PAGE HAS BEEN INTENTIONALLY LEFT BLANK

TELECOMMUNICATIONS INFRASTRUCTURE STANDARDS
MARINE CORPS BASE CAMP LEJEUNE

SECTION 27 10 00

BUILDING TELECOMMUNICATIONS CABLING SYSTEM
09/14

PART 1 GENERAL

1.1 REFERENCES

The publications listed below form a part of this specification to the extent referenced. The publications are referred to within the text by the basic designation only.

ASTM INTERNATIONAL (ASTM)

ASTM D709	(2013) Laminated Thermosetting Materials
ASTM E814	(2013a) Standard Test Method for Fire Tests of Through-Penetration Fire Stops

ELECTRONIC COMPONENTS ASSOCIATION (ECA)

ECA EIA/ECA 310	(2005) Cabinets, Racks, Panels, and Associated Equipment

INSTITUTE OF ELECTRICAL AND ELECTRONICS ENGINEERS (IEEE)

IEEE 100	(2000; Archived) The Authoritative Dictionary of IEEE Standards Terms

INSULATED CABLE ENGINEERS ASSOCIATION (ICEA)

ICEA S-90-661	(2012) Category 3, 5, & 5e Individually Unshielded Twisted Pair Indoor Cables for Use in General Purpose and LAN Communications Wiring Systems Technical Requirements

NATIONAL ELECTRICAL MANUFACTURERS ASSOCIATION (NEMA)

ANSI/NEMA WC 66	(2013) Performance Standard for Category 6 and Category 7 100 Ohm Shielded and Unshielded Twisted Pairs

NATIONAL FIRE PROTECTION ASSOCIATION (NFPA)

NFPA 70	(2014; AMD 1 2013; Errata 1 2013; AMD 2 2013; Errata 2 2013; AMD 3 2014; Errata 3-4 2014; AMD 4-6 2014) National Electrical Code

TELECOMMUNICATIONS INDUSTRY ASSOCIATION (TIA)

TIA-492AAAA	(2009b) 62.5-um Core Diameter/125-um Cladding Diameter Class 1a Graded-Index

	Multimode Optical Fibers
TIA-526-14	(2010b) OFSTP-14A Optical Power Loss Measurements of Installed Multimode Fiber Cable Plant
TIA-526-7	(2002; R 2008) OFSTP-7 Measurement of Optical Power Loss of Installed Single-Mode Fiber Cable Plant
TIA-568-C.1	(2009; Add 2 2011; Add 1 2012) Commercial Building Telecommunications Cabling Standard
TIA-568-C.2	(2009; Errata 2010) Balanced Twisted-Pair Telecommunications Cabling and Components Standards
TIA-568-C.3	(2008; Add 1 2011) Optical Fiber Cabling Components Standard
TIA-569	(2012c; Addendum 1 2013; Errata 2013) Commercial Building Standard for Telecommunications Pathways and Spaces
TIA-606-B	(2012) Administration Standard for the Telecommunications Infrastructure
TIA-607	(2011b) Generic Telecommunications Bonding and Grounding (Earthing) for Customer Premises
TIA/EIA-604-2	(2004b; R 2014) FOCIS 2 Fiber Optic Connector Intermateability Standard

U.S. DEPARTMENT OF AGRICULTURE (USDA)

RUS Bull 345-83	(1979; Rev Oct 1982) Gas Tube Surge Arrestors (PE-80)

U.S. FEDERAL COMMUNICATIONS COMMISSION (FCC)

FCC Part 68	Connection of Terminal Equipment to the Telephone Network (47 CFR 68)

UNDERWRITERS LABORATORIES (UL)

UL 1286	(2008; Reprint Sep 2013) Office Furnishings
UL 1666	(2007; Reprint Jun 2012) Test for Flame Propagation Height of Electrical and Optical-Fiber Cables Installed Vertically in Shafts
UL 1863	(2004; Reprint Nov 2012) Communication Circuit Accessories
UL 444	(2008; Reprint Apr 2010) Communications Cables

UL 467	(2007) Grounding and Bonding Equipment
UL 497	(2001; Reprint Jul 2013) Protectors for Paired Conductor Communication Circuits
UL 50	(2007; Reprint Apr 2012) Enclosures for Electrical Equipment, Non-environmental Considerations
UL 514C	(2014) Nonmetallic Outlet Boxes, Flush-Device Boxes, and Covers
UL 969	(1995; Reprint Nov 2008) Standard for Marking and Labeling Systems

1.2 RELATED REQUIREMENTS

Section 26 20 00 INTERIOR DISTRIBUTION SYSTEM and Section 33 82 00 TELECOMMUNICATIONS, OUTSIDE PLANT, apply to this section with additions and modifications specified herein.

1.3 DEFINITIONS

Unless otherwise specified or indicated, electrical and electronics terms used in this specification shall be as defined in TIA-568-C.1, TIA-568-C.2, TIA-568-C.3, TIA-569, TIA-606-B and IEEE 100 and herein.

1.3.1 Main Distribution Frame (MDF)

A physical structure at a central location for terminating permanent backbone cables to interconnect with service provider (SP) equipment at the activity minimum point of presence. The MDF generally includes vendor specific components to support voice and data circuits, building surge protector assemblies, main cross connect blocks, equipment support frames, and fire rated plywood backboard. Depending upon local site conditions, the MDF and BDF may be the same space.

1.3.2 Building Distribution Frame (BDF)

A structure with terminations for connecting backbone, campus, and horizontal cabling. The BDF generally includes a cross connect, equipment support frame or lockable terminal cabinet, cable supports, and fire rated plywood backboard. The BDF shall include building protector assemblies when used for campus backbone or SP cabling.

1.3.3 Intermediate Distribution Frame (IDF)

An intermediate termination point for horizontal wiring and cross-connections within telecommunications rooms. Shall be connected to MDF with both fiber and copper. Secure Internet Protocol (SIPR) vault or cabinet is considered an IDF.

1.3.4 Telecommunications Room (TR)

An enclosed space for telecommunications equipment, terminations, and cross-connect wiring for horizontal cabling, minimum size shall be 8' x 10' unless a local waiver is provided by Base Telephone via the Contracting Officer. Telecommunications room could be much larger depending on

building size and customer requirements. Telecommunications rooms should be centrally located unless multiple rooms are used. Access to Rooms shall be from a common area such as a hallway / open office space and the door should swing out. Additional/ Multiple Telecommunications Rooms are required if the usable floor space to be served exceeds 10,000 square feet, or the cable length between the horizontal cross-connect and the telecommunications outlet, including slack, exceeds 295 feet (90m). Multiple telecommunications rooms will be connected by a minimum of two 75mm (3 inch) conduits overhead, if under slab it is considered OSP, see Section 33 82 00 TELECOMMUNICATIONS OUTSIDE PLANT (OSP). The minimum clear height in the room shall be 2.4 m (8 ft) without obstructions. The height between the finished floor and the lowest point of the ceiling should be a minimum of 3 m (10 ft) to accommodate overhead pathways. The flooring shall be sealed concrete to reduce dust and static electricity; no carpet or tile. Two separate dedicated 20 amp electrical outlet will be installed for each communications equipment rack needed. Outlets should be installed on the same wall as the conduits or communications backboard. There should not be an electrical panel within the telecommunications room unless it serves only the room. The room requires a lockable door keyed or key padded to restrict access to Base Telephone personnel only. Room should not have any windows or skylights. The long wall farthest from door where the point of presence is should be covered with plywood backboard for mounting equipment; additional boards may be needed for mounting additional equipment (see BACKBOARDS below). Light, as measured within the telecommunications room, should be a minimum of 500 lx (50 foot-candles). Lighting design should seek to minimize shadows within the telecommunications room. Equipment not related to the support of the telecommunications room (e.g., piping, ductwork, pneumatic tubing) shall not be installed in, pass through, or enter the telecommunications room. See Encl C Telecomm Room Typical Layout.

1.4 ENVIRONMENTAL REQUIREMENTS

Connecting hardware shall be rated for operation under ambient conditions of 0 to 60 degrees C (32 to 140 degrees F) and in the range of 0 to 95 percent relative humidity, non-condensing. Provide HVAC tied into building system or separate that will maintain continuous cooling environmental control (24 hours per day, 365 days per year). If emergency power is available, consider connecting it to the HVAC system.

1.5 SYSTEM DESCRIPTION

The structured telecommunications pathway system shall include permanently installed horizontal and backbone pathways, service entrance facilities, work area pathways, telecommunications outlet boxes, conduit, and raceway, and hardware for splicing, terminating, and interconnecting. The horizontal system includes the pathway between the telecommunications room and the work area telecommunications outlet. The horizontal system shall be suitable for star topology with the MDF/IDF at the center or hub of the star. The backbone pathway system includes intrabuilding and interbuilding interconnecting pathway to provide connectivity between the MDF's, BDF's, and IDF's. The backbone system shall be suitable for star topology with the MDF at the center or hub of the star.

1.6 SUBMITTALS

Government approval is required for submittals with a "G" designation; submittals not having a "G" designation are for Contractor Quality Control approval. The following shall be submitted in accordance with Section

01 33 00 SUBMITTAL PROCEDURES:

SD-02 Shop Drawings

Telecommunications drawings; G

Distribution frames; G

In addition to Section 01 33 00 SUBMITTAL PROCEDURES, provide shop drawings in accordance with paragraph SHOP DRAWINGS.

SD-03 Product Data

Telecommunications cabling (backbone and horizontal); G

Patch panels; G

Telecommunications outlet/connector assemblies; G

Equipment support frame; G

Building protector assemblies; G

Connector blocks; G

Protector modules; G

Submittals shall include the manufacturer's name, trade name, place of manufacture, and catalog model or number. Include performance and characteristic curves. Submittals shall also include applicable federal, military, industry, and technical society publication references. Should manufacturer's data require supplemental information for clarification, the supplemental information shall be submitted as specified in paragraph REGULATORY REQUIREMENTS and as required in Section 01 33 00 SUBMITTAL PROCEDURES.

SD-06 Test Reports

Telecommunications cabling testing; G

Factory reel tests; G

Furnish factory reel tests for optical fiber cables.

SD-07 Certificates

Telecommunications Contractor Qualifications; G

Manufacturer Qualifications; G

Test plan; G

SD-10 Operation and Maintenance Data

Telecommunications cabling and pathway system Data Package 5; G

Submit operations and maintenance data in accordance with Section 01 78 23 OPERATION AND MAINTENANCE DATA and Section 01 78 24.00 20

FACILITY ELECTRONIC OPERATION AND MAINTENANCE SUPPORT INFORMATION (eOMSI) and as specified herein.

1.7 ADDITIONAL SUBMITTAL REQUIREMENTS

All submittals of material, equipment and design must be approved by the Base Telephone Office via the Contracting Officer prior to installing any telecommunications wiring and equipment.

1.7.1 Telecommunications Drawings

Provide **Registered Communications Distribution Designer (RCDD)** approved drawings complete with wiring diagrams and details required to prove that the distribution system shall properly support connectivity from the telecommunications equipment room to telecommunications work area outlets. Show the entrance facility and layout of cabling and pathway runs, cross connect points, MDF, BDF, IDF, grounding system, rack elevations, terminating block arrangements and type. Drawings shall depict final telecommunications cabling configuration, including location, color coding, gage, pair assignment, polarization, and terminating blocks layout at cross connect points and patch panels after telecommunications cable installation. Provide a plastic laminated schematic of the as-installed telecommunications cable system showing cabling, MDF's, BDF's, IDF's, and equipment rooms keyed to floor plans by room number. Mount the laminated schematic in each telecommunications room as directed by Base Telephone. The Telecommunications Contractor shall receive design approval from the Base Telephone Office via the Contracting Officer prior to installation.

1.7.2 Distribution Frames

Provide shop drawing showing layout of applicable equipment including incoming cable stub or connector blocks, building protector assembly, outgoing cable connector blocks and equipment spaces and racks. (See Encl A Rack Elevation Example, Encl B Backboard Example, and Encl C Telecomm Room Typical Layout.)

1.7.3 Qualifications

1.7.3.1 Minimum Contractor Qualifications

Prior to installation, submit data of provider's experience and qualifications. All work under this section shall be performed by and all equipment shall be provided by a certified Telecommunications Contractor, hereinafter referred to as the Contractor. The Contractor shall have the following qualifications in Telecommunications Systems installation:

a. Contractor shall have a minimum of 3 years experience in the application, installation and testing of the specified systems and equipment to be installed.

b. All supervisors and installers assigned to the installation of this system or any of its components shall be Building Industry Consulting Services International (BICSI) Certified Cabling Installation Technicians, Installer Level 2, or have a minimum of 3 current consecutive years experience in the installation of the specified copper and fiber optic cable and components.

c. Contractor shall include names and locations of two projects successfully completed using optical fiber and copper communications

cabling systems. Include specific experience in installing and testing structured telecommunications distribution systems using optical fiber and Category 5E/6 cabling systems. Include written correspondence from users that systems have performed satisfactorily for not less than 18 months.

1.7.3.2 Minimum Manufacturer Qualifications

The equipment and hardware provided under this contract will be from manufacturers that have a minimum of 3 years experience in producing the types of systems and equipment specified.

1.7.4 Test Plan

Provide a complete and detailed test plan for the telecommunications cabling system including a complete list of test equipment for the UTP and optical fiber components and accessories 60 days prior to the proposed test date. Include procedures for certification, validation, and testing.

1.7.5 Additions to Operation and Maintenance Manuals

In addition to requirements of Data package 5 for the telecommunications cabling and pathway system, include the requirements of paragraph entitled "Telecommunications Drawings."

1.8 DELIVERY AND STORAGE

Provide protection from weather, moisture, extreme heat and cold, dirt, dust, and other contaminants for telecommunications cabling and equipment placed in storage.

PART 2 PRODUCTS

2.1 PATHWAYS (BACKBONE AND HORIZONTAL)

TIA-569. Pathway shall be conduit, cable tray, or access flooring. Under floor duct and wireway is not recommended. Cantilever-type center hung tray or Poke-Thru devices shall not be used. Provide grounding and bonding as required by TIA-607. Cable wiring shall comply with NFPA 70. All conduits entering the Telecommunications Room should be grouped and consolidated, conduits can be "Home Run" or stubbed to cable tray, all should have bonding bushing / plastic insert, and shall extend down from the ceiling 3 to 4 inches or extended to ladder rack or onto the backboard. Conduit will be bonded to the TMGB or TGB by minimum #6 AWG green sheathed stranded conductors. All penetrations will be sealed with firestopping material in accordance with the requirements of Section 07 84 00 FIRESTOPPING. A minimum of two 3 inch conduits overhead will be installed between the Main Telecommunications Room and other communication rooms (IDFs).

2.1.1 Work Area Pathways

Comply with TIA-569, except minimum 1¼ -inch diameter conduit will be used. System furniture pathways shall comply with UL 1286. Horizontal cabling for open offices shall comply with TIA-568-C.1. In system furniture that blocks access to telecommunications wall outlets: each system furniture desk/cubical shall be equipped with system furniture communications outlets that are plugged into the telecommunications wall outlets. Every port that is blocked from access shall be extended into the

furniture.

2.1.2 Pull Boxes

Construct of galvanized sheet steel with screw-fastened covers. Minimum size of boxes shall be not less than 4-11/16-inches wide by 4-11/16-inches in length by 2 1/8-inches deep for individual 1-1/4-inch diameter conduit; minimum size of boxes shall be not less than 12"W x 48"L x 5"D for 3" conduit, 15"W x 60"L x 8"D for 4" conduit per TIA-569, provide pull boxes where length of conduit exceeds 100 feet or where there are more than two 90 degree bends, or equivalent. Align conduit ends on opposite sides of pull boxes as in a pull through, do not turn or change direction in pull boxes. Provide pull boxes in straight lengths of conduit; pull points, LC, LB, condulets are not authorized.

2.2 BENDS

Inside radius of conduit bend shall be a minimum of 6 times the internal diameter of conduit for conduits of 2 inches or less. Inside radius of conduit bend shall be a minimum of 10 times the internal diameter of conduit for conduits larger than 2 inches.

2.3 TELECOMMUNICATIONS OUTLET BOXES

Telecommunications outlet boxes should be placed in all work areas and any area that can be converted to work areas; so any furniture package configuration will have a connection along the wall with a 6' base cord. Good practice is 6" to the left or right of every electrical outlet box in workable office areas or any area that could be converted into workable office area such as a storage closet; also any conference room should have one floor and one ceiling box. Boxes shall be standard type 5 inches square by 2 7/8 inches deep for CAT6 with 1¼-inch diameter side knock-outs, with a single gang plaster ring. Mount flush in finished walls at height indicated by drawings. Outlet boxes for wall-mounted telephones shall be 2 by 4 by 2 1/8 inches deep with 1 CAT6 cable terminated in a standard wall phone plate; mounted at 54 inches above finished floor. Outlet boxes for handicapped telephone station or work counter area shall be mounted at a height 48 inches above finished floor. Outlet boxes installed in floor for classrooms or open spaces shall be telecommunications floor boxes large enough to support a surge of users with proper cable protection and ports that are not parallel to the floor. Floor boxes and under slab cabling should not be used on the first floor in wet areas. Tele electric poles or furniture managed pathways fed from above the wet area should be used. Multi-user Telecommunications Outlet Assembly i.e. Multimedia Outlet Assemblies (MUTOA) should be placed where best suited for the furniture used in open office spaces.

2.3.1 Telecommunications Cabling

Cabling shall be UL listed for the application and shall comply with TIA-568-C.1, TIA-568-C.2, TIA-568-C.3 and NFPA 70. Provide a labeling system in accordance with Paragraph "LABELING" and Base Telephone via the Contracting Officer guidance for cabling as required by TIA-606-B and UL 969. Cable specifications must be provided in submittal and approved by Base Telephone via the Contracting Officer before installation. Cabling manufactured more than 12 months prior to date of installation shall not be used.

2.3.1.1 Backbone Copper

ICEA S-90-661, TIA-568-C.1, TIA-568-C.2, ANSI/NEMA WC 66 and UL 444, copper backbone cable shall be solid conductor, 24 AWG, 100 ohm, **CAT6**, XX-pair UTP (Unshielded twisted pair); NFPA 70 CMR rated formed into 25 pair binder groups covered with a thermoplastic jacket. NFPA 70 type CMP may be substituted for type CMR. Pair twist-lengths and frequency per unit length shall be determined by the manufacturer. A minimum of two conductor twists per foot is required. Color coding shall comply with industry standards for all cables. Sufficient pair count **CAT6** riser (25, 50, 100, 200...) and two 4 pair 24 AWG Category 6 riser (CMR) rated cable will be installed between the MDF and each of the IDF's. Voice Riser shall be terminated on 50 pair 89D-Style Insulation Displacement Contact cross connect blocks with industry standard 110 blade punch down and two CAT6 cables terminated in the patch panels last position. Any Backbone Copper run in under slab conduit shall be rated for outdoor use in accordance with AHJ and have lightning protection at each end.

2.3.1.2 Backbone Optical Fiber Between Closets

TIA-492AAAA, TIA-568-C.3, UL 1666, NFPA 70. Optical fiber cable shall be 12-fiber multimode 62.5/125-um and 12-fiber single mode 8/125-um, terminated on ST type connectors, with a non-conductive optical fiber riser cable (OFNR) rating. Nonconductive optical fiber Plenum (OFNP) cable may be substituted for type nonconductive optical fiber riser cable (OFNR). The cable jacket shall be orange and yellow. Terminate in a rack mounted fiber distribution center with sufficient slack for maintenance operations (minimum 36" in FDC and 18' coil on backboard). Fiber should be run to each IDF from the MDF.

2.3.2 Horizontal Cabling

Comply with NFPA 70, and performance characteristics in TIA-568-C.1.

2.3.2.1 Horizontal Copper

TIA-568-C.2, ANSI/NEMA WC 66, NFPA 70, STP shielded twisted pair), 100 ohm. Provide a minimum of four cables to each work area outlet (faceplate), each individually twisted pair, 24/23 AWG conductors, Category 6 general purpose cable, with white PVC jacket for all odd numbered jacks, and blue PVC jacket for all even numbered jacks (unclassified service). Plenum (CMP) or riser (CMR) cable may be substituted for general purpose cable. If the cabling passes thru a plenum air space then plenum (CMP) rated cable is required. If the cabling is run in under slab conduit, outdoor rated cable shall be used. Contact Base Telephone via the Contracting Officer for special requirements on classified service, unclassified service, under slab cabling, using water block, and any item not covered in this document.

2.3.2.2 Horizontal Optical Fiber

TIA-492AAAA, TIA-568-C.3, NFPA 70. Optical fiber cable shall be 62.5/125-um, 2-fiber multimode, rated nonconductive optical fiber cable (OFN). Plenum (OFNP) or riser (OFNR) cable may be substituted for general purpose cable. The cable jacket shall be orange and be of single jacket construction. If the cabling passes thru a plenum air space then plenum (CMP) rated cable is required. Currently Camp Lejeune does not install any Horizontal Optical Fiber to the work area outlet.

2.4 DISTRIBUTION FRAMES

Provide building distribution frames (BDF's), intermediate distribution frames (IDF's), and main distribution frames (MDF's) as shown on design drawings for terminating and cross connecting permanent cabling.

2.4.1 Equipment Support Frame

Provide in accordance with ECA EIA/ECA 310 and UL 50.

a. Bracket, wall mounted (for buildings with very low jack/pair count and no secured equipment requirement), provide 8 gauge aluminum hinged bracket compatible with 482.6 mm panel mounting. **(Not preferred by Camp Lejeune Base Telephone.)**

b. Rack, wall mounted (for buildings with low jack/pair count and a secured equipment requirement), 16 gauge steel construction treated to resist corrosion. Rack should be swing gate type, minimum 38" High x 25" Depth with standard 19" panel mounts. Must be in secured Telephone Room.

c. Racks, floor mounted modular type, 16 gauge steel construction, treated to resist corrosion. Provide rack with vertical and horizontal cable management channels, top and bottom cable troughs, grounding lug and a surge protected power strip with 6 duplex 20 amp receptacles. Racks should be large enough to support all telephone / data equipment required plus 25 percent spare. Rack shall be compatible with 19 inches panel mounting. Racks should have a maximum of 7’ height.

d. Cabinets should be used in areas that are not secured. Cabinets, freestanding modular type, 16 gauge steel construction, minimum, treated to resist corrosion. Cabinets shall be no smaller than 24"W X 48"H X 30"D but can be as large as 7'H X 24"W X 30"D. Cabinet shall have removable and lockable side panels, front and rear doors. Cabinet shall be vented in the roof and rear door. Cabinet shall have cable access in the roof and base and be compatible with 19 inches panel mounting. Provide cabinet with grounding bar, roof mounted 550 CFM fan with filter and a surge protected power strip with 6 duplex 20 amp receptacles and cord long enough to reach dedicated building power. All cabinets shall be lockable (keyed to current base key) and large enough to support all telephone / data equipment required in the building plus 25 percent spare. Dedicated electrical outlets should be installed on backboard within 6' of the cabinet. A backboard for mounting equipment is still needed when a cabinet is installed (see paragraph "BACKBOARDS" below).

2.4.2 Building Protector Assemblies

Building protector assembly are required on all OSP cables and shall have 710 type connector blocks for connection to the exterior cable at full capacity. M150-66 type IDC for connection to the voice cross connect blocks. 110 type IDC protector assemblies are not approved.

2.4.2.1 Protector Modules

UL 497, RUS Bull 345-83, three-electrode gas tube or solid state type rated for the application. Provide the number of surge protection modules equal to the number of pairs of exterior cable of the building protector assembly.

2.4.3 Connector Blocks

Provide insulation displacement connector (IDC) 50 pair 89D-Style with industry standard 110 blade punch down for Category 5e and higher systems. Provide blocks for the number of backbone cables terminated on the block plus 25 percent spare. Also provide sufficient blocks for cross connects for all IDFs.

2.4.4 Patch Panels

Provide ports for the number of horizontal and backbone cables terminated on the panel plus 25 percent spare within the top 2/3 of the equipment support frame (bottom 1/3 is reserved for DATA equipment). Provide pre-connectorized ST type Optical fiber and copper patch cords for patch panels. Provide patch cords, as complete assemblies, with matching connectors as specified. Patch cords shall meet minimum performance requirements specified in TIA-568-C.1, TIA-568-C.2, and TIA-568-C.3 for cables, cable length and hardware specified.

2.4.4.1 Modular to Patch Panel

Provide in accordance with TIA-568-C.1 and TIA-568-C.2. Panels shall be third party verified and shall comply with EIA/TIA Category 6 requirements. Panel shall be constructed of 0.09 inches minimum aluminum and shall be cabinet mounted and compatible with an ECA EIA/ECA 310 19 inches equipment cabinet. Each panel shall provide 48 port, non-keyed, dual 8-pin modular ports, wired to T568A. Patch panels shall terminate the building cabling on Type 110 IDCs and shall utilize a printed circuit board interface. The rear of each panel shall have incoming cable strain-relief and routing guides. DO NOT USE ZIP TIES. Panels shall have each port factory numbered and be equipped with manufacturer's labels and laminated plastic covers above each port.

2.4.4.2 Fiber Optic Patch Panel

Provide panel for maintenance and cross-connecting of optical fiber cables. Panel shall be constructed of 16 gauge steel or 11 gauge aluminum minimum and shall be compatible with a ECA EIA/ECA 310 19 inch equipment rack. Each panel shall provide 12 multimode and 12 single-mode adapters as ST in accordance with TIA/EIA-604-2 with metallic alignment sleeves. Provide dust cover for unused adapters. The rear of each panel shall have a cable management tray a minimum of 8 inches deep with removable cover, incoming cable strain-relief and routing guides. DO NOT USE ZIP TIES. Panels shall have each adapter factory numbered.

2.4.4.3 Special Network Requirements

Buildings with Special Networks Requirements such as Secured Internet Protocol, American Warrior Network, MCCS.org, and Naval Blue Network may require additional guidance outside this specification. Secured areas or secured networks in non secured areas may require Protected Distribution System which is also outside this specification. In these cases contact Base Telephone for Guidance at (910) 451-9439 or (910) 451-4760.

2.4.5 Optical Fiber Distribution Panel

Rack mounted optical fiber distribution panel (OFDP) shall be constructed in accordance with ECA EIA/ECA 310 utilizing 11 gauge aluminum minimum. Panel shall have strain relief, routing guides, splice tray and shall have

a cover for patch cord protection. Each panel shall provide 12 multimode and 12 single-mode adapters. Provide adapters as ST with metallic alignment sleeves. Provide dust covers for adapters. Provide patch cords as specified in the paragraph PATCH PANELS. Pigtails are not recommended.

2.5 TELECOMMUNICATIONS OUTLET BOXES

Standard type 5" x 5" x 2 7/8" square box with a single gang plaster ring. Mount flush in finished walls at height indicated by drawings. Depth of boxes shall be large enough to allow manufacturer's recommended conductor bend radii normally 2 7/8".

2.6 TELECOMMUNICATIONS OUTLET/CONNECTOR ASSEMBLIES

2.6.1 Outlet/Connector Copper

Outlet/connectors shall comply with FCC Part 68.5, TIA-568-C.1, and TIA-568-C.2. UTP Outlet/connectors shall be UL 1863 listed, non-keyed, 4-pair, dual 8-pin modular, constructed of high impact rated thermoplastic housing and shall be third party verified and shall comply with TIA-568-C.2 Category 6 requirements. Provide outlet/connectors in indicated color (normally ivory or white and should match electrical coverplates). Outlet/connectors provided for Category 6 UTP cabling shall meet or exceed the requirements for the cable provided. Outlet/connectors shall be terminated using a Type 110 IDC PC board connector, color-coded for both T568A and T568B wiring. Each outlet/connector shall be wired **T568A**. UTP outlet/connectors shall comply with TIA-568-C.2 for 750 mating cycles. UTP outlet/connectors installed in outdoor or marine environments shall be rated for that use or protected with weatherproof enclosure.

2.6.2 Cover Plates

Telecommunications cover plates shall comply with UL 514C, and TIA-568-C.1, TIA-568-C.2, TIA-568-C.3; flush or oversized design constructed of high impact thermoplastic material, equipped with laminated plastic cover for label, and able to accept 2 dual 8-pin modular couplers. Color should match color of receptacle/switch cover plates specified in Section 26 20 00 INTERIOR DISTRIBUTION SYSTEMS. Provide labeling in accordance with the paragraph LABELING in this section.

2.7 BACKBOARDS

Provide void-free, interior grade plywood 19 mm (3/4 inch) thick as indicated. Backboards shall be fire rated, with the fire stamp visible, or covered with two coats of gray or a lighter color, nonconductive, fire-retardant paint on all sides. Boards should be installed 4'Width x 8'Height and cover at least an 8' x 8' area on the long wall farthest from the door in the telecomm room. Additional boards may be needed anywhere electronic equipment is to be mounted. (See Encl for backboard layout.)

2.8 GROUNDING AND BONDING PRODUCTS

Comply with UL 467, TIA-607, and NFPA 70. Components shall be identified as required by TIA-606-B. Ground rods shall be in accordance with Section 26 20 00 INTERIOR DISTRIBUTION SYSTEMS. The preferred ground for the Telephone Main Grounding Bus (TMGB) bar will be to the Main electrical Distribution Panel (MDP) bus bar and building steel. In most cases a #6 AWG bonding conductor is recommended for telecommunications. All grounding and bonding conductors within the Telecommunications room will be green

sheathed copper conductor, stranded, and labeled as suitable for use as such and tagged **"DO NOT REMOVE"**. All grounding and bonding conductors running outside of the Telecommunications room should be protected in conduit and sized according to references. The minimum size of the TMGB shall be no smaller than 4" by 10" by 1/4 inch thick; bus bar should be factory made and factory drilled - not fabricated or drilled onsite. Holes should be double pattern with both 5/16 and 7/16 size holes. All bonding and grounding terminations shall be irreversible and secured with a double hole crimp termination. Do not exceed minimum bend radius on bonding and grounding conductors.

2.9 FIRESTOPPING MATERIAL

Provide in accordance with Section 07 84 00 FIRESTOPPING. Provide asbestos-free fire stopping system capable of maintaining an effective barrier against flame and gases. System shall be UL listed and comply with ASTM E814. Include UL system number UL listed print from manufacturer for each type of floor, wall, and ceiling penetration.

2.10 MANUFACTURER'S NAMEPLATE

Each item of equipment shall have a nameplate bearing the manufacturer's name, address, model number, and serial number securely affixed in a conspicuous place; the nameplate of the distributing agent will not be acceptable.

2.11 FIELD FABRICATED NAMEPLATES

ASTM D709. Provide nameplates for equipment rooms and telecommunication room doors in accordance with schedule provided on drawings. Provide laminated plastic nameplates for each equipment enclosure, relay, switch, and device; as specified or as indicated on the drawings. Each nameplate inscription shall identify the function and, when applicable, the position. Nameplates shall be melamine plastic, 0.125 inch thick, white with black center core. Surface shall be matte finish. Corners shall be square. Accurately align lettering and engrave into the core. Minimum size of nameplates shall be one by 2.5 inches. Lettering shall be a minimum of 0.25 inch high normal block style.

PART 3 EXECUTION

3.1 INSTALLATION

Telecommunications pathway systems, including the horizontal and backbone pathway systems, telecommunications outlet/connector assemblies, and associated hardware shall be installed in accordance with TIA-568-C.1, TIA-568-C.2, TIA-568-C.3, TIA-569, NFPA 70, manufacturer instructions, current industry best practices, UL standards as applicable, and approval of Base Telephone via the Contracting Officer. Base Telephone requirements will be coordinated through the Contracting Officer. Metal raceway bases, covers, and dividers shall be bonded and grounded in accordance with TIA-607. Pathways shall be installed in accordance with the following minimum clearance distances of 1.2 meters(4 feet) from motors, generators, frequency converters, transformers, x-ray equipment or uninterruptible power system, 300 mm (12 in) from power conduits and cable systems, 125 mm (5 inches) from fluorescent or high frequency lighting system fixtures.

3.1.1 Cabling

Install Category 6 UTP and optical fiber telecommunications cabling and pathway system as detailed in TIA-568-C.1, TIA-568-C.2, and TIA-568-C.3. Use an approved insulation displacement connection (IDC) tool kit for copper cable terminations. Screw terminals shall not be used. Do not untwist Category 6 UTP cables more than 1/2 inch (12 mm) from the point of termination to maintain cable geometry. Provide service loop on each end of the cable, 10 feet (3 meters) in the telecommunications room, 6" (150mm) in or close to the work area outlet for UTP. Do not exceed manufacturers' cable pull tensions for copper cables. Provide a device to monitor cable pull tensions. Do not exceed 110 Newton pull tension for four pair copper cables. Do not chafe or damage outer jacket materials. Use only lubricants approved by cable manufacturer. Do not over cinch cables, or crush cables with staples. Only Velcro type cable straps are allowed on Category 6 cable and optical fiber cable. **DO NOT USE ZIP TIES.** UTP cable bend radii shall not be less than four times the cable diameter.

3.1.1.1 Backbone Cable

a. Copper Backbone Cable. Install backbone copper cable in 3" conduit pathways between MDF, BDF, and IDF equipment as indicated in this spec and on drawings. All under slab cables shall be rated for outdoor use and protected at both ends.

b. Optical fiber Backbone Cable. Install backbone optical fiber in one of three 1" inter ducts inside 3" conduit pathways between MDF, BDF, and IDF equipment as indicated in this spec and on drawings. Do not exceed manufacturer's recommended bending radii and pull tension. Prepare cable for pulling by cutting outer jacket 10" (250 mm) leaving strength members exposed for approximately 10" (250 mm). Twist strength members together and attach to pulling eye. Vertical cable support intervals shall be in accordance with Manufacturer's recommendations.

3.1.1.2 Horizontal Cabling

Install horizontal cabling in an approved pathway as indicated in this specification and on drawings between MDF, BDF, IDF, and telecommunications outlet assemblies at workstations. All under slab cables shall be rated for outdoor use.

3.1.2 Pathway Installations

Comply with TIA-569, except provide 1-1/4 inch (32 mm) diameter conduit to each work area outlet from cable tray or telecommunication room backboard. Conceal conduit within finished walls, ceilings, and floors (not in wet areas). Keep conduit minimum 305 mm (12 inches) away from parallel runs of electrical power equipment, flues, steam, light ballast, and hot water pipes. Install conduit parallel with or at right angles to ceilings, walls, and structural members where located above accessible ceilings and where conduit is visible after completion of project. Run conduits in crawl spaces as if exposed. Install no more than two 90 degree bends for a single horizontal cable run. All bends/turns in conduits will be in straight runs of conduit; a pull box shall be installed after every 180 degrees of bends or 100'; in no case will a turn be made within a pull box. The minimum size for a pull box for a single 1 1/4" conduit will be 4 11/16" long by 4 11/16" wide by 2 1/8" deep, and for a 3" conduit 30"W x 54"L x9"D. All conduits should contain a bushing at the end to protect the cable from damage and required bonding. Pull points, LC, LB, condulets and

consolidation points are not authorized.

3.1.2.1 Under Floor Duct Pathway Systems

Under floor cabling and under floor duct are not recommended in wet areas. If approved by Base Telephone via the Contracting Officer, they shall be installed in accordance with manufacturers' recommendations. Use CMP in plenum spaces and CMX or water block cable designed for outdoor applications in wet areas.

3.1.2.2 Conduit Installed Under Floor Slabs

Conduit under floor slabs should be avoided in the Greater Camp Lejeune area due to wet area close to coastal waters. If under slab installation is approved by Base Telephone via the Contracting Officer, conduit shall be located a minimum of 300 mm (12 inches) below the vapor barrier. Seal all conduit connections and at penetrations through vapor barrier. Use a CMX or water block cable designed for outdoor applications.

3.1.3 Service Entrance Conduit, Overhead

Galvanized rigid steel or IMC from service entrance to service entrance fitting or weather head outside of building. Ensure entrance fitting or weather head is sized to ensure minimum bend radius for largest cable is maintained.

3.1.4 Service Entrance Conduit, Underground

PVC Type EPC-40, galvanized rigid steel, or steel IMC. Underground portion shall be encased in minimum of 75 mm (3 inches) of concrete extending from the building entrance to 1500 mm (5 feet) out from the building footer or walkway and shall be a minimum of 450 mm (18 inches) below slab or grade. Mark the end with a durable marking source so it can be tied to the Outside Plant distribution.

3.1.5 Cable Tray Installation

Install cable tray components in accordance with TIA-569 and manufacturer's instructions. Ensure proper bonding as required by TIA-607. Only CMP and OFNP type cable shall be installed in a plenum space. A continuous, stranded, bonding conductor shall be run along the tray tapped to each section to ensure bonding. Remove all sharps from cable tray and pathways. Ensure bonding is on the pathway so as not to obstruct horizontal cabling.

3.1.6 Work Area Outlets

All work areas will contain a minimum of two face plates. Any work area larger than 80 sq feet will require additional face plates to service any work location in the room within 6 feet of a faceplate. This also applies to any area that could be converted to work space in the future. Recommend a Telecommunications outlet box be placed 6" to the left or right of every electrical outlet box in workable office areas or any area that could be converted into workable office area such as a storage closet. All work area faceplates will contain four category 6 jacks/ports unless otherwise approved by Base Telephone via the Contracting Officer.

3.1.6.1 Terminations

Terminate UTP cable in accordance with TIA-568-C.1, TIA-568-C.2, TIA-568-C.3 and wiring configuration as specified, **T568A**.

3.1.6.2 Faceplates

As a minimum, each jack shall have manufacturer labels numbered and be equipped with laminated plastic cover over the label. Also it shall be labeled as to its function with a blue computer icon on all even ports and a red phone icon on all the odd ports. (For secured networks contact Base Telephone via the Contracting Officer.)

3.1.6.3 Cables

Unshielded twisted pair shall have a minimum of 152 mm (6 inch) slack cable loosely coiled in or close to the telecommunications outlet boxes. Minimum manufacturer's bend radius for each type of cable shall not be exceeded. All telecommunications outlet boxes should have 4 cables to a double gang box if wiring is included in contract (no rough in or future use allowed).

3.1.6.4 Pull Cords

Pull cords shall be installed in all conduit serving telecommunications outlets if wiring is not included in contract, label each end.

3.1.7 Telecommunications Room Termination

Install termination hardware required for Category 6 and optical fiber system. A **single punch** insulation displacement tool shall be used for terminating copper cable to insulation displacement connectors (no multi punch tools).

3.1.7.1 Equipment Support Frames

Install in accordance with TIA-569:

a. Bracket / lockable cabinet, wall mounted, approved by Base Telephone. Mount to plywood backboard per manufacturer's recommendations. Mount so height of highest panel does not exceed 1980 mm (76 inches) above floor. Mount so there is sufficient space remaining on backboard to mount lightning protection, bonding, and cable managers, or install additional backboard. Ensure proper low voltage clearance in accordance with NFPA 70.

b. Racks / lockable cabinet, floor mounted modular type. Permanently anchor rack to the floor per manufacturer's recommendations. Mount so there is sufficient space remaining on backboard to mount lightning protection, bonding, and cable managers, or install additional backboard. Install sections of ladder rack anchored to telephone rack/cabinet and at least two walls. Ensure proper low voltage clearance in accordance with NFPA 70.

3.1.8 Electrical Penetrations

Seal openings around electrical penetrations through fire resistance-rated wall, partitions, floors, or ceilings as specified in Section 07 84 00, FIRESTOPPING.

3.1.9 Grounding and Bonding

Will be conducted in accordance with TIA-607, and NFPA 70 except only two hole compression lugs will be accepted.

3.1.10 Firestopping

Seal openings around raceway penetrations through fire resistance rated walls, partitions, floors and ceiling utilizing proper firestopping materials to maintain fire resistive integrity in accordance with Section 07 84 00 FIRESTOPPING.

3.2 LABELING

3.2.1 Labels

All labels shall be in accordance with TIA-606-B; except jacks will be numbered in a logical, sequential, clockwise numbering system from 1 to X with a closet designator. Example would be 145 C 146, would be the 145th & 146th jacks from the C comm. room. All labels shall be numbered with manufacturers labeling system (not fabricated or P-touch) and be equipped with laminated plastic cover. All terminations that are not to work area outlets should be in the last patch panel locations and labeled accordingly, i.e. DDC, FACP, Elevator, Wall phones.

3.2.2 Cable

Cables shall be labeled using color labels on both ends with encoded identifiers per TIA-606-B.

3.2.3 Termination Hardware

Workstation outlets and patch panel connections shall be labeled using manufacturer labeling system, color coded with identifiers in accordance with TIA-606-B.

3.3 TESTING

3.3.1 Telecommunications Cabling Testing

Perform telecommunications cabling inspection, verification, and performance tests in accordance with TIA-568-C.1, TIA-568-C.2, and TIA-568-C.3. Perform optical fiber field inspection tests via attenuation measurements on factory reels and provide results along with manufacturer certification for factory reel tests. Remove failed cable reels from project site upon attenuation test failure.

3.3.1.1 Inspection

Visually inspect cabling jacket materials for UL or third party certification markings. Visually inspect UTP and optical fiber jacket materials for UL or third party certification markings. Inspect cabling terminations in telecommunications rooms and at workstations to confirm color code for tip and ring pin assignments, and inspect cabling connections to confirm compliance with TIA-568-C.1, TIA-568-C.2, and TIA-568-C.3. Visually confirm Category 6 marking of outlets, wallplates, outlet/ connectors, cables, and patch panels.

3.3.1.2 Verification Tests

UTP backbone copper cabling shall be tested for DC loop resistance, shorts, opens, intermittent faults, and polarity between conductors, and between conductors and shield, if cable has overall shield. Test operation of shorting bars in connection blocks. Test cables after termination but not cross connected. Perform 100 MHz near-end-cross-talk (NEXT) and attenuation tests for Category 6 systems installations.

Perform optical fiber end to end attenuation tests using a power meter and light source and optical time domain reflectometer (OTDR) and manufacturer's recommended test procedures. Perform tests in accordance with TIA-526-14, Method A for horizontal, multimode optical fiber and TIA-526-7, Method A for backbone, single mode optical fiber. Perform verification acceptance tests and factory reel tests.

3.3.1.3 Performance Tests

a. Category 6 Links. Perform UTP **permanent link** tests in accordance with TIA-568-C.1, TIA-568-C.2, TIA-568-C.3. Tests shall include wire map, length, attenuation, NEXT, and propagation delay. A channel test is not acceptable.

b. Optical Fiber Links. Perform optical fiber end-to-end attenuation tests and reel tests at jobsite.

c. As built drawings (not hand written, AutoCAD and .pdf preferred) showing all telecommunications outlets and their numbers.

3.3.1.4 Final Verification Tests

Perform verification tests for UTP and optical fiber systems after the complete telecommunications cabling and workstation outlet/connectors are installed. Provide summary in .pdf and detailed test results in tester format .flw, as built drawings in .pdf and .dwg, and fiber power meter/OTDR reports on a CD/CDRW to Base Telephone office. All Test reports should have a building or project number on it. The final QC and certification of installation will be performed by Base Telephone after the contractor has provided passing and acceptable results on all test and As Built drawings showing all telecommunications outlets and their numbers. Test results that are a marginal may not be accepted. Also Fiber tests that pass the link budget but exceed tolerance on any connector or splice are considered a failure. All discrepancies shall be repaired and retested.

3.3.1.5 Records

a. Records to be provided for copper shall include the cable specification sheets from the manufacturer, the cable routing and locations, all splice point locations, patch panel and jack locations, cable length, cable reel numbers and installation location, building or project number. The test results shall be submitted in an electronic version on a CD/CDRW (do not e-mail).

b. Records to be provided for fiber shall include the cable specification sheets from the manufacturer, the cable routing and locations, all splice point locations, patch panel and jack locations, cable length, cable reel numbers and installation location, building or project number. The test results shall be submitted in an electronic version on a CD/CDRW (do not e-mail).

c. As built drawings showing all telecommunications outlets and their numbers, Rack Elevations, communication room locations, building or project number, and pathways should be submitted in an electronic version on a CD/CDRW (do not e-mail) and a hard copy should be posted in the communication room.

3.4 SCHEDULE

Some metric measurements in this section are based on mathematical conversion of inch-pound measurements, and not on metric measurement commonly agreed to by the manufacturers or other parties. The inch-pound and metric measurements are as follows:

PRODUCTS	INCH-POUND	METRIC
Outlet Boxes		
1. Standard		
- Length/width	5 inches (square)	127 mm (square)
- Depth	2 1/8 inches	55 mm
2. Telephone Outlet		
- Length	4 inches	100 mm
- Width	2 inches	50 mm
- Depth	2 1/8 inches	55 mm
- Depth	1 1/2 inches	38 mm

-- End of Section --

THIS PAGE HAS BEEN INTENTIONALLY LEFT BLANK

On Backboard – PROTECTOR / BUILDING ENTRANCE (BEP), TMGB,
Proper Bonding & Grounding, Cable Management and Slack on Ladder Rack.
Ladder rack should be from comm rack to at lease two walls.

Rack or
Cabinet if in unsecure area

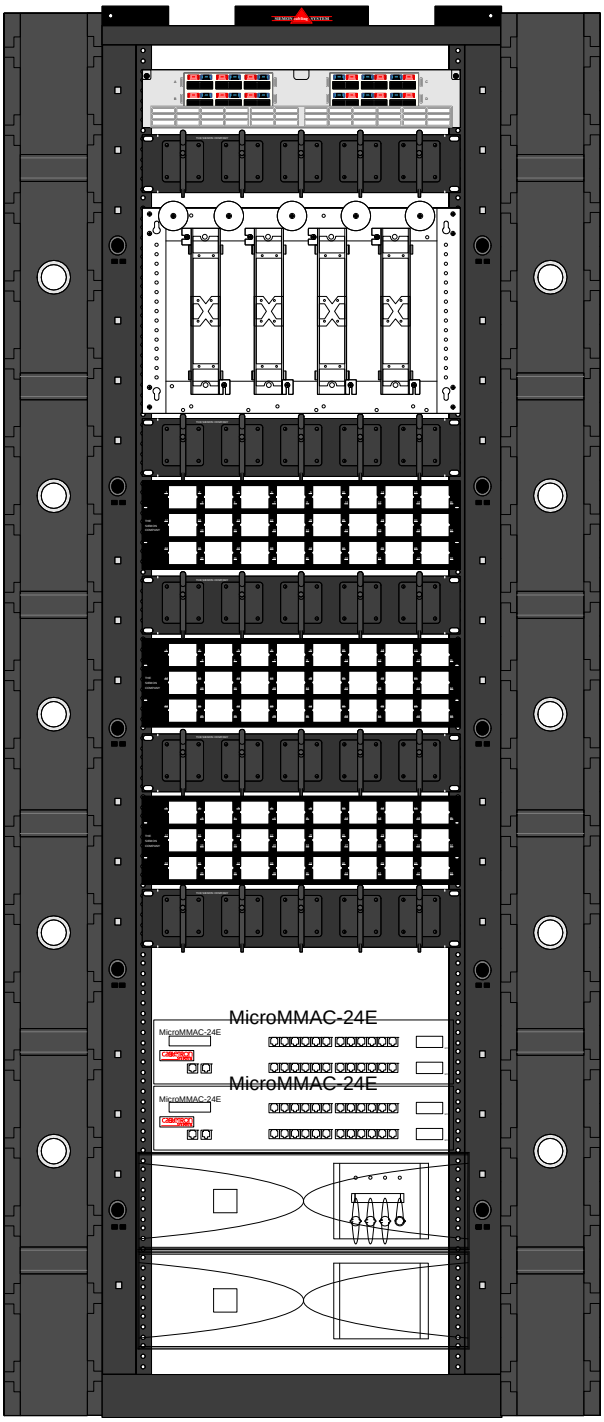

FIBER
Distribution

ST connectors

CABLE MANAGER

COPPER

Connecting BLOCKS

CABLE MANAGER

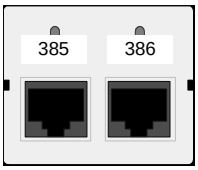

Panel Dual
Port Label

Bottom 15 RU is reserved for DATA equipment

Number of telecommunications work outlets in building determine number of patch panels and need for additional racks

If 3 or more racks are used: place the fiber and copper cable terminations in center racking to reduce patch cord length

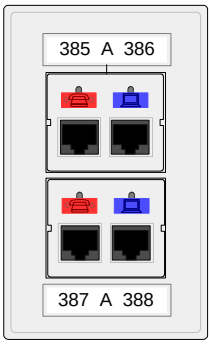

Work Area
Outlet

TELECOMMUNICATIONS INFRASTRUCTURE STANDARDS MARINE CORPS BASE CAMP LEJEUNE

SECTION 27 10 00
Encl A
RACK ELEVATION
EXAMPLE

THIS PAGE HAS BEEN INTENTIONALLY LEFT BLANK

TELECOMMUNICATIONS INFRASTRUCTURE STANDARDS
MARINE CORPS BASE CAMP LEJEUNE
SECTION 27 10 00 Encl B
BACK BOARD EXAMPLE

Telephone backboard - 4'x8' Provide min 2 void-free, interior grade plywood 19 mm (3/4 inch) thick as indicated. Backboards shall be fire rated, with the fire stamp visible or covered with two coats of gray or a lighter color nonconductive fire-retardant paint on all sides. Boards should be installed 4′ Width x 8′ Height securely fastened to the wall anywhere equipment is to be mounted.

Conduits 1¼" – with plastic / bonding bushings - home run to work area outlet or cable tray.

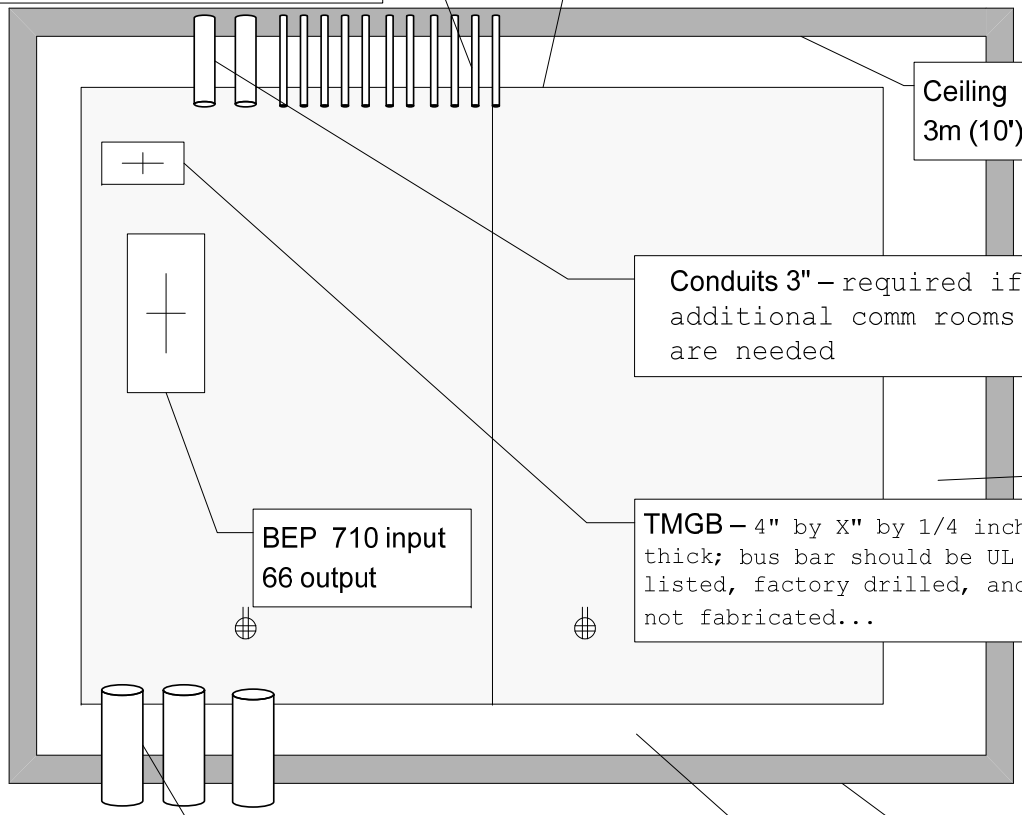

Ceiling 3m (10')

Conduits 3" – required if additional comm rooms are needed

BEP 710 input 66 output

TMGB – 4" by X" by 1/4 inch thick; bus bar should be UL listed, factory drilled, and not fabricated...

Conduits 4" – 3 PVC or Rigid steel for telecomm with bonding bushings run to demarcation point outside building

Floor

Wall

General notes
-all metalic conduit and equipment must be bonded to the TMGB and building ground per TIA J-STD-607-A with min #6AWG stranded green sheath conductor.
-all conduits need to be securely mounted, fire stopped, and over lap the back board by 3-6".
-1 dedicated 20 amp dual power is required per comm. rack/cabinet.

-If wired by base telephone; contractor should install all except the below and add pull strings in conduits.

-if wired by contractor; install four CAT6 cables in each 1¼" conduit to typical work area outlet; also install all ladder racks, patch panels, cabinets, building protectors, OSP PE-39 cable, fiber optic cable, riser cable, and equipment IAW Base Tele 27 10 00 .

NOT to Scale for reference only

THIS PAGE HAS BEEN INTENTIONALLY LEFT BLANK

TELECOMMUNICATIONS INFRASTRUCTURE STANDARDS
MARINE CORPS BASE CAMP LEJEUNE
SECTION 27 10 00 Encl C
Telecomm room typical layout

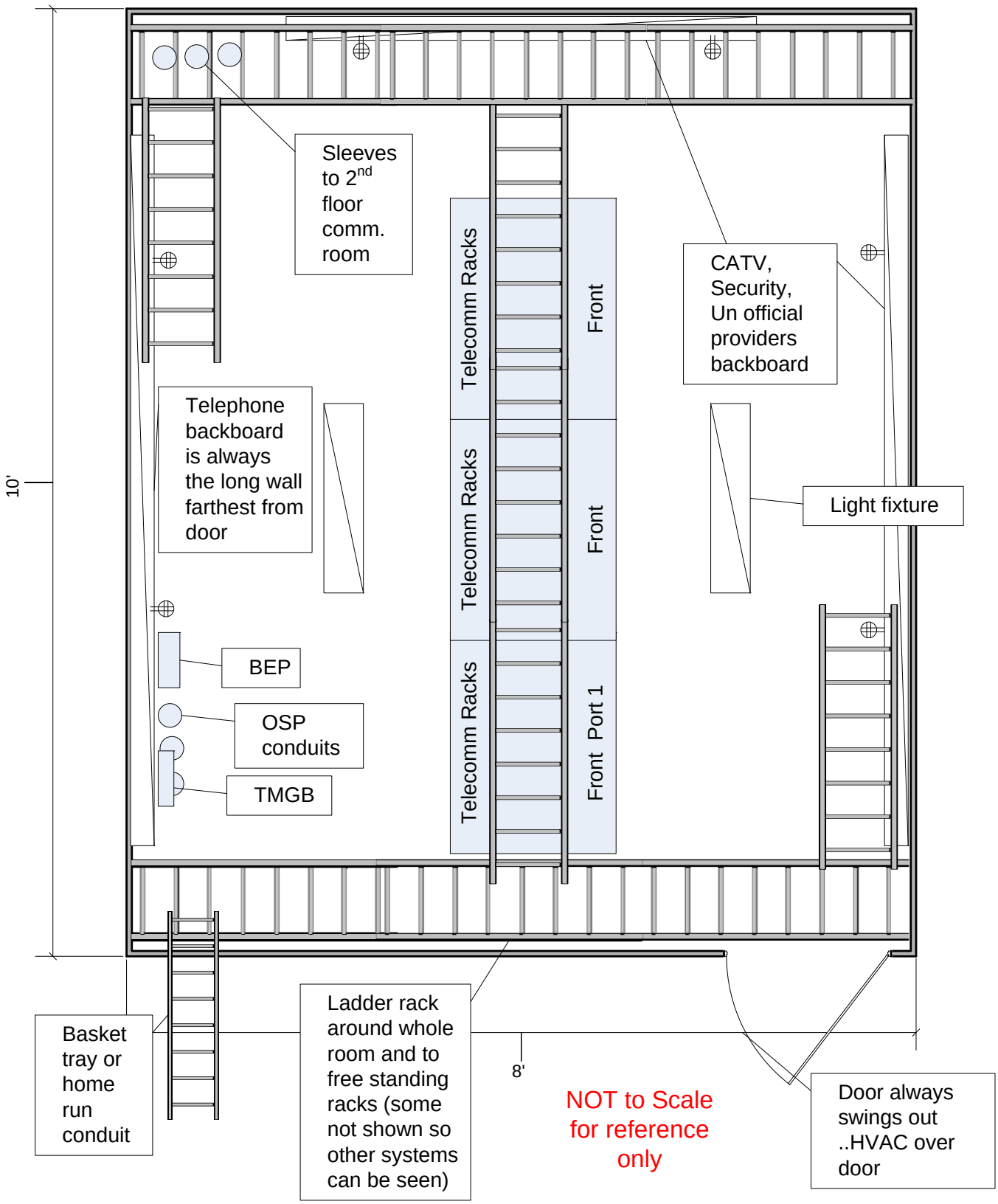

THIS PAGE HAS BEEN INTENTIONALLY LEFT BLANK

27 40 00

AUDIO VIDEO (A/V) COMMUNICATIONS
11/14

PART 1 GENERAL

1.1 REFERENCES

The publications listed below for a part of this section to the extent referenced. The publications are referred to within the text by basic designation only.

TELECOMMUNICATIONS INDUSTRY ASSOCIATION (TIA)

TIA-607	(2011b) Generic Telecommunications Bonding and Grounding (Earthing) for Customer Premises
TIA-568-C.1	(2009; Add 2 2011; Add 1 2012) Commercial Building Telecommunications Cabling Standard
TIA-568-C.2	(2009; Errata 2010) Balanced Twisted-Pair Telecommunications Cabling and Components Standards
TIA-568-C.3	(2008; Add 1 2011) Optical Fiber Cabling Components Standard
TIA-1152	(2009) Requirements for Field Test Instruments and Measurements for Balanced Twisted-Pair Cabling

1.2 RELATED REQUIREMENTS

The following UNIFIED FACILITIES GUIDE SPECIFICATION (UFGS)Sections apply to this section with additions and modifications specified herein:

10 10 00 VISIUAL COMMUNICATIONS SPECIALTIES

27 10 00 BUILDING TELECOMMUNICATIONS CABLING SYSTEM

27 54 00.00 20 COMMUNITY ANTENNA TELEVISION (CATV) SYSTEMS

33 82 00 TELECOMMUNICATIONS OUTSIDE PLANT (OS).

1.3 DEFINITIONS

Analog: Represented as a continuous signal or quantity

Aspect Ratio: Proportions of a projected picture area

AV Consultant: Consultant hired by the U.S. government for design and consultation services.

AV Contractor: Contractor that is under the General Contractor and that is

selected by the General Contractor based on the requirements of this specification.

AV system(s): Audiovisual (AV) system(s), including all components contained herein that work in conjunction to create and completely integrated a fully functioning system as described within the drawings and specifications.

AV systems control room and/or AV systems head end: The enclosed area or room specifically designated for the routing, termination and/or cross connecting of an audiovisual system cable (i.e. riser cable) to another audiovisual system cable and/or equipment and racks.

Baseband: Refers to a signal that contains the necessary information to reproduce a picture but it is not modulated onto a radio frequency carrier.

BNC Connector: A locking type of industrial connector commonly used in professional video

Broadband: Refers to any baseband signal that is modulated into RF carriers and Each RF carrier represents a TV channel.

Conduit: If used without specific reference to type, it shall be understood to mean "raceway".

Contractor Furnished, Contractor Installed (CFCI): Items that are provided by the Contractor.

Digital: A system of recording data and images, in a non-contiguous codes, provides signal reproduction with little noise or distortion.

Drawings: The term "drawings" means all audiovisual systems drawings and associated sketches, details, riser diagrams, etc.

DTP: Digital Twisted Pair, referencing a cable infrastructure using shielded twisted pair cable, RJ-45 plugs, jacks, and couplers. Vendor's cable strongly recommended for the installation.

Equalizer: An electronic device which compensates for frequency inaccuracies in an audio or visual system.

Furnish: To purchase and deliver to the project site, complete with every necessary appurtenance and support, all as part of the audiovisual systems work. Purchasing shall include payment of all sales taxes and other surcharges as may be required to assure that purchased items are free of all liens, claims or encumbrances.

General Contractor: Contractor hired by the U.S. government for construction services.

Government Furnished, Government Installed (GFGI): Items that are provided by the U.S. government but are germane to the completion of the requirements.

Install: To unload at the site delivery point and perform every operation necessary to establish secure mounting and correct operation at the proper location in the project, all as part of the work.

Decoder: A device that converts NTSC, PAL, SECAM or NTSC 4:3 video to RGB

or HD.

New: Manufactured within the past year and never before used.

Other Furnished, Other Installed (OFOI): Items that are provided by the other parties but are germane to the completion of the requirements.

Provide: Furnish and install.

Raceway: Any pipe, duct, extended enclosure or conduit (as specified for a particular system) that is used to contain wires and that is of such nature as to require the wires to be installed by a "pulling-in" procedure.

Riser: The portion of the installation that transmits between building floors (or between audiovisual systems rooms), also referred to as "backbone cabling".

Work: The term "work" means all construction and services specified within this document. The work includes all related labor, materials, equipment and services provided, or to be provided, by the systems contractor to fulfill the proposal's obligations.

1.4 GENERAL

1.4.1 Scope of Work

Supply, delivery, supervision, coordination, installation of equipment items specified herein and shown on the Contract Drawings as well as incorporation of Government Furnished Equipment (GFE), testing, documentation and instruction related to complete audio, video racks, consoles, cables and control wiring for the audiovisual system.

Provide a complete audiovisual systems including but not limited to common spaces, computer lab, teachers lab, strategy center, classrooms, conference rooms, AV work area, collaborative areas, help desks, and dining halls, etc. Provide audio visual systems design, engineering, and installation within all phases and spaces of the building. Systems are to include all devices, equipment, installation, programming and commissioning in accordance with requirements of the contract documents and drawings. The work detailed within the contract documents has been specified to meet certain requirements for performance and appearance. It shall be the responsibility of the contractor to implement the guidelines and requirements contained in the contract documents and translate them into a complete design package containing all elements necessary for a complete, operational, and functionally integrated audiovisual system(s).

Provide all equipment, materials, labor and services, not specifically mentioned or shown, which may be necessary to complete all aspects of the installation. Ensure that they comply with requirements stated or reasonably inferred by the specifications.

Perform all work and provide all products, including systems integration, miscellaneous design support, required testing and personnel training for the project in order to ensure fully operative systems and proper installation of equipment. Provide all work detailed in the contract documents as a turnkey installation, including all material, labor, engineering, warranties, taxes, freight and permits. Only items and requirements specifically stated to be provided by others shall not be a requirement for this section of the work.

Provide calculations and analysis to support design and engineering decisions as specified in the contract submittals.

1.4.2 Coordination

The AV Contractor shall verify space, power and cooling requirements with the other disciplines to ensure systems will function as intended. The AV Contractor shall coordinate with the electrical contractor on raceway/junction box locations for audiovisual equipment and the routing of audio, video, control and power cables/raceway from equipment, terminations and pull boxes to the system equipment racks.

1.4.3 Related Drawings

Architectural Drawings
Interior Drawings
Audiovisual Drawings
Electrical Drawings
Mechanical Drawings

1.5 SUBMITTALS

Government approval is required for submittals with a "G" designation; submittals not having a "G" designation are for information only. When used, a designation of "AE" following the "G" designation identifies the consultant that will review the submittal for the Government. Submit the following in accordance with Section 01 33 00 SUBMITTAL PROCEDURES.

SD-02 Shop Drawings

Audio Visual Floor Plans; G

Detail Riser Diagrams; G

Include dimensioned plans, sections and elevations. Detail equipment assemblies and indicated dimensions, weights, loads, required clearances, method of field assembly, components, and location and size of each field connection.Provide point-to point wiring diagrams and typed wire lists identifying every connection for information. Include electronic devices such as switches, transformers, and terminal blocks. Include electronic devices such as switches, transformers, and terminal blocks. Indicate locations of all components. Identify cables by types, colors and wire numbers.Provide system plans showing all device locations and ceiling distributed loudspeaker layouts with wattage tap settings.

Provide conduit riser diagrams showing connection of all devices, required conduits sizes along with types and quantities of cables to be used and cable identification tags.

Provide rack layouts, indicating the proposed arrangement of rack mounted equipment including junction boxes and locations of conduit penetrations.

Submit fully dimensioned construction details of all panels, plates, devices, control stations and other off the shelf or custom fabricated items or modifications (e.g. installation of audio/visual equipment in lecterns). Include complete parts lists and, as required, schematic diagrams.Submit mounting and support details for distributed ceiling loudspeakers, and all other items mounted overhead complete with parts

lists and dimensions. Include a full plan view, front and side elevations of each item with corresponding support structure and mounting hardware. Verify load ratings of all hanging components including attachment hardware.

Submit electronic copies of any custom programming including source codes. Include printed copies of all control screens, wiring pages, etc.

SD-03 Product Data

Visual Systems; G
Audio Systems; G
Control Systems; G
Ceiling Mounted Loudspeaker; G
Audio Distribution Amplifier; G
Power Amplifier; G
Audio Patch Panel; G
Digital Signal Processor; G
Audio Conference; G
Conferencing DSP; G
Scaling Presentation Matrix Switcher; G
Scaling Presentation Switcher; G
Universal VGA Input Board; G
Matrix Switcher HDMI Transmitter Board; G
Matrix Switcher HDMI Output Board; G
Matrix Switcher HDMI Receiver Board; G
Matrix Switcher Blank Plate; G
Modular Digital Matrix Switcher; G
Switcher with Transmitter; G
Twisted Pair Transmitter for HDMI; G
Mono 70/100V Amplifier; G
Video Patch Panel; G
Pan Tilt Zoom Camera; G
Video Conferencing; G
DVD Player; G
LCD Flat Panel Video Display; G
Flat Panel Video Signage Display; G
Interactive Whiteboard; G
DVI Extender; G
Image Geometry Correction; G
Digital Signage System; G
SATELLITE MASTER ANTENNA TELEVISION; G
CONFERENCING SYSTEM; G
REMOTE CONTROL SYSTEM CENTRAL; G
Tabletop Control Touch Panel; G
Two Input Wall Plates Transmitter; G
Two Input Wall Plates Receiver; G
Gigabit Edge Switch; G
Extenders; G
IP Link Control Processor-Type 1; G
IP Link Control Processor-Type 2; G
USB Extender; G
Flat Panel Displays Mount; G
Flat Panel Display Wall Mount (Articulated Arm); G
Wire and Cable; G
Furniture Mountable Enclosure for Cables; G
Table Top Pop-Up Box; G
Teaching Stations (portable Furniture); G
Millwork Racks Inside Credenza; G

Freestanding Racks Outside Credenza; G
Uninterruptible Power Supply (UPS); G
Balance/ Unbalanced Conversion; G
Stereo to Mono Audio Conversion; G

Submit catalog data sheets, neatly bound with title page, space for submittal stamps and tabbed dividers between sections. List all proposed equipment with reference to corresponding specification paragraph numbers or equipment titles. Indicate all accepted substitutions.

Submit a schedule of finishes indicating proposed materials and color selections for all exposed items subject to COR selection.

Submit a list showing coordination of selected frequencies for all wireless transmitters.

SD-06 Test Reports

Category 6 Shielded Cable Testing; G

SD-10 Operation and Maintenance Data

Operation and Maintenance Manuals; G

SD-11 Closeout Submittals

Record Documentation; G

In addition to hard copy submittals, submit all files necessary to produce any of the submittals product data or drawings as follows:

A master file list in text format shall be placed on each CD ROM with a short description of files in the submittal.

The shop drawings shall be in AutoCAD R2013 or later drawing (.DWG) format. Drawing Exchange File Format (.DXF) is not acceptable. All XREFs, fonts, and other drawing parts necessary shall be included.

Word processing files shall be in latest MS Word format. Graphs and charts shall be in MS Excel format. Any graphic images necessary for the reproduction of the submittals shall be included in the files and shall be included in the JPEG (.JPG) file format.

Manufacturers' data sheets, equipment manuals, and other documentation provided by the Manufacturers to the Contractor or documents that are similarly not otherwise available to the Contractor in electronic format shall be excluded from this requirement.

1.6 GENERAL CONDITIONS

The Contractor represents that they are familiar with, and have expertise in, the work of this nature and scope. The Contractor further agrees that they shall provide all work as may be required to make a complete job. The Contractor shall comply with all of the regulations, including safety regulations of national, city, local and other government agencies having jurisdiction, concerning the work of the Contractor. The Contractor shall give all notices and comply with all laws, ordinances, codes, rules and regulations bearing on the conduct of the work. If the Contractor performs any work that is contrary to such laws, ordinances, codes, rules and

regulations, they shall make all changes for compliance and bear all associated costs.

The Contractor shall be responsible to provide and maintain a storage facility. If this storage facility is required to be on site, it shall be the Contractor's responsibility to coordinate the size and spatial requirements with the owner. The Contractor shall assume full responsibility for the storage facility and all contents, unless otherwise indicated by the owner.

The Contractor shall provide all protection necessary to safeguard their work from damage by their operations and the operations of others. Unless the Contractor proves to the owner's satisfaction that the work has been damaged by others, the contractor shall promptly repair, adjust and clean all defective installations and bear all associated costs.

All of the Contractor's work shall be tested and inspected by all authorities having jurisdiction and in accordance with all specifications. The contractor shall coordinate and cooperate fully and shall provide, at no additional cost to the owner, manpower, blueprints, facilities, scaffolds, etc. to reasonably assist the inspectors.

The project documentation is, in general, diagrammatic and/or developed to communicate design intent. The Contractor shall coordinate the installation of all devices and/or equipment with the owner prior to installation based on the existing field conditions.

The Contractor shall examine the site and the programmatic documents and review, with the owner, the designated areas of access, delivery and storage for the contractor's use. The contractor agrees that such areas are satisfactory and sufficient for their needs in the completion of their work and in conformance with the terms of this contract.

The owner reserves the right to furnish any materials necessary for the project.

All permits required for any part of the Contractor's work shall be procured and paid for by the Contractor. The Contractor shall determine all permits required and transmit this information to the owner.
The Contractor warrants that both they and their subcontractors are licensed, as required, by the authorities having jurisdiction and as required by local ordinances.

The Contractor must state if they intend to utilize a subcontractor and provide said subcontractor's name and address. The subcontractor shall comply with all the same rules, regulations, laws and codes, licenses, etc. as required by the contractor and as specified herein. The owner reserves the right to approve or disapprove any subcontractor proposed by Contractor.

The owner shall provide to the Contractor AutoCAD backgrounds for all required facility floor plans. All pre-fabrication and record drawings required for the project and as stated herein shall be completed within the latest version of AutoCAD.

The Contractor, upon receiving notice from owner that the contractor has furnished inferior, improper or unsound work or materials (including equipment) or has furnished work or materials at variance with that which is specified, will, within 24 hours, proceed to remove such work or materials and make good all other work or materials damaged; thereby, at

the option of the owner, the contractor shall immediately replace such work or materials with work or materials as specified. The removal, replacement and repair shall be performed at such times and with manpower sufficient in the judgment of the owner to avoid disturbance to occupants or other ongoing work for the project. If the Contractor does not remove such unsound work within a reasonable time, the owner may remove it and may store the material at the expense of the Contractor. If the contractor does not pay the expenses of such removal within ten (10) days' time thereafter, the owner may, upon written notice, sell such materials at auction or at a private sale and shall account for the net proceeds thereof, after deducting all the costs and expenses that should have been borne by the contractor and all expenses of the sale.

The owner shall have the authority, at all times and until final completion and acceptance of the work, to inspect and reject work and materials that, in its judgment, are not in conformity with the drawings and details, room data sheets and specifications, and the owner's decision, in regard to character and value of work, shall be final and conclusive on both contracting parties. If the owner permits said work or materials to remain, the owner shall be allowed the difference in value or shall, at its election, have the right to have said work or materials repaired or replaced, as well as the damage caused thereby, at the expense of the contractor at any time within one (1) year after the completion of the entire project or within such longer period as may be covered by any guarantee; neither payments made to the Contractor nor any other acts of the owner shall be construed as evidence of acceptance, waiver or estoppels.

Any expense incurred by the owner in connection with the foregoing shall be borne by the Contractor, and the owner may withhold money due to the contractor or recover money already paid to the Contractor to the extent of such expense.

It shall be understood that the room data sheets, requirements integration package sheets (RIPs), specifications and drawings are complementary. Where there are conflicts within the documents, the overall design intent shall govern.

To the extent that they govern the work, the program documents, specifications and drawings also govern change-order work, if any. The drawings for the work utilize symbols and schematic diagrams that have no dimensional significance. The work shall be installed to fulfill the diagrammatic intent expressed on the drawings, field layouts and shop drawings of all trades.

Certain details appear on the drawings for the work, and they are specified to the dimensioning and positioning of the work. These are intended only for general information purposes, and they do not obviate field coordination for individual items of the indicated work.

General construction and architectural general construction information as well as architectural features and finishes shall be derived from the structural and architectural drawings and specifications and may require ongoing coordination with the architect.

Ratings of devices, materials and equipment specified without reference to specific performance criteria shall be understood to be nominal or nameplate ratings established by means of industry standard procedures. It is the intent of the room data sheets, drawings and specifications to provide complete operating audiovisual systems. All work necessary to

provide such a system shall be performed. Any discrepancies shall be brought to the Owner/ Owner's Representative's attention.

The work called for under this contract shall be carried on simultaneously with the work of other trades and owner functions in such a manner that does not delay the overall progress of the construction project. The contractor is responsible for all coordination of the work with other trades.

Include in the work all necessary supervision and an issuing of all coordination information to any other trades that are supplying work in order to accommodate the audiovisual systems installation.
For equipment items that are to be installed but not purchased as part of the work, the work shall include the following:

1. Coordination of delivery.
2. Unloading from delivery trucks.
3. Safe handling and field storage up to the time of permanent placement in the project.
4. Correction of any damage to the item(s).
5. Mounting in place and connection(s) as specified.

Items that are to be installed but not purchased as part of the work shall be carefully examined upon delivery to the project. Claims that any of these items have been received in such condition that their installation will require procedures beyond the reasonable scope of the work will be considered only if presented in writing within one (1) week of the delivery date to the project. The work includes all procedures necessary to put in satisfactory operation all items for which no claims have been submitted, as outlined above.

Structured cabling is specified to be provided by the low-voltage cable contractor. The audiovisual systems contractor shall identify the cable types, quantities, lengths and final locations to be terminated and provide them to the owner and to the low-voltage cable contractor to be provided and installed. It is the AV contractor's responsibility to ensure that the information is complete and accurate. Any errors or omissions in the ordering information shall be the responsibility of the AV contractor.

1. The contractor shall provide to the owner, as a part of the pre-fabrication submittal, the name of the project manager that will provide all duties and responsibilities, as specified herein, during the term of the project.
2. The project manager shall maintain the ability to make all managerial decisions on behalf of the contractor on a day-to-day basis and shall retain the authority to accept notices of deduction, inspection reports, payment schedules and any other project-related correspondence on behalf of the owner.
3. The project manager shall schedule and attend project management meetings, during which time all system-related issues are discussed, scheduled, confirmed and/or resolved.
4. The project manager shall be available by telephone during normal business hours (0800 to 1700 - project site zone = UTC (TBD)) within two hours during the term of the project.

    a. After normal business hours, the project manager shall be available by telephone within four hours during the term of the project.
    b. In the event that the project manager is not available within the

allotted time frame, the contractor may designate another employee to temporarily act as the project manager in all correspondence with the owner.

c. The contractor shall ensure that any individual temporarily assuming the duties of the project manager is at equal or higher level in the contractor's managerial chain of command.

5. Upon notification by the owner of any project-related installation issue or issue that may contradict the specifications as stated herein, the project manager shall respond to such issue verbally and/or in writing within an eight-hour period

   a. Responses to such issues stated above shall include a clear understanding of the issue, along with a tentative plan of action, reflecting milestones and/or deadlines to resolve the issue.
   b. Where appropriate and based on the overall importance of the project issue, the project manager shall follow up their initial response with a written response to the issue within 24 hours of the issue's identification.

6. Prior to the initiation of the work, the project manager shall submit a schedule reflecting key milestones of the work, including, but not limited to, the following:

   a. Bid award.
   b. Kick-off meeting.
   c. Master plan submittal.
   d. Pre-fabrication submittal.
   e. Ordering, delivery and installation of head-end system equipment.
   f. Field equipment delivery.
   g. Project management schedule.
   h. Payment schedule.
   i. Installation completion date.
   j. System training.
   k. Delivery of as-built documentation.
   l. Delivery of operations and maintenance manuals.
   m. Final system test.
   n. Acceptance of system.

7. The project manager shall update the schedule on a weekly basis to reflect the status of each key milestone as the work progresses.

AS THE SYSTEM INSTALLATION PROGRESSES, THE PROJECT MANAGER SHALL BE CAPABLE OF DISCUSSING ANY OR ALL OF THE ABOVE MENTIONED ITEMS AT THE REQUEST OF THE OWNER AND SHALL ADDRESS EACH ITEM AS IT RELATES TO THE CURRENT STATUS OF THE WORK.

1.7 PROJECT MANAGEMENT

Verify all project site conditions applicable to the work of this Section. Notify the COR in writing of any discrepancies, conflicts, or omissions prior to bid opening. Otherwise, correct these at no additional cost to the Government.

If conditions develop requiring a need to vary from the contract documents, notify the COR immediately in writing. Otherwise, make recommendations, submit proposed drawings showing how the work may be installed , and on approval, proceed with the necessary changes without additional cost to the Government.

The Contractor shall provide a project manager to oversee and coordinate all activities on the project.

1.8 DELIVERY, STORAGE AND HANDLING

Deliver equipment in fully enclosed packaging with appropriate packing material.

Store equipment in spaces with environments controlled within manufacturer's ambient temperature and humidity tolerances for non-operating equipment.

Protect equipment during handling and installation to prevent scratches, dents, chips, etc.; equipment with significant or disfiguring cosmetic flaws will be rejected.

1.9 MANUFACTURER'S QUALIFICATIONS

Firm shall be a specialist in providing systems similar to that indicated for this project and with a record of successful in-service performance. Manufacturer's system shall be a standard "off-the-shelf" package utilizing the latest hardware and software technology.

Manufacturer shall maintain a service center capable of providing training, parts and emergency maintenance and repairs for the overall system at the worksite within eight hours maximum response time.

Maintain environmental conditions (temperature, humidity, and ventilation) within limits recommended by manufacturer for optimum results. Do not install products under environmental conditions outside manufacturer's absolute limits.

1.10 AV CONTRACTOR QUALIFICATIONS

Specifically identify the AV Contractor's completed projects of the same or greater magnitude and scope. The descriptions supplied must clearly indicate that the submitting firm was actively involved in these projects and that the submitting firm has been actively involved for at least five years in projects of this magnitude.

The AV Contractor shall provide a draft plan for contract implementation that includes phased scheduling, a staffing plan, and a schedule for phased, testing, training, and project acceptance. This shall include a plan for identifying any additional conduit mechanical or electrical infrastructure that would be required to complete this contract.

The AV Contractor must identify their project team as part of this submission and declare all subcontractors with applicable qualifications. The AV Contractor shall provide key project team resumes, indicating past similar project history and applicable factory training certificates. An experienced installer with a minimum of five (5) years experience installing systems of similar or greater complexity who is an authorized representative of the equipment manufacturer for installation, maintenance of manufacturer's equipment, and completed system installations with a record of successful in-service performance. Contractor shall provide certified on-site staff for specified remote-control software and hardware that includes product-line training, software programming, and service support training. Contractor shall provide CTS personnel assigned to the

project with and CTS-D, CTS-I, certificate or equal NISET designation with a minimum of five years of industry experience. If the Contractor does not have certified engineers trained on a specified product, they must employ a qualified engineer prior to the pre- construction submission date and provide applicable certifications and training records.

The AV Contractor shall provide, as part of installation and configuration activities, an onsite factory-trained engineer for the Digital Sound Processor (DSP) and AV control products included in this project. The AV Contractor shall provide manufacturer-certified on-site staff for DSP-based audio processor software that includes product-line training, software programming, and service support training.

Submit these certificates and credentials as part of the qualifications submittal for selection and approval by the General Contractor and the Owner's Representative.

1.11 TESTING AGENCY'S QUALIFICATIONS

An independent agency, with experience and capability to conduct the testing indicated, that is a member company of a nationally recognized testing laboratory (NRTL) as defined by OSHA in 29 CFR 1910.7, and is acceptable to authorities having jurisdiction.

1.12 COORDINATION

Coordinate size and location of furnishings and equipment cabinets, consoles, lecterns, control stations and racks with architectural interiors and electrical to ensure all connections are placed in the desired locations and the equipment sizes do not exceed the floor space or wall space allocated. For proper coordination, the following is recommended:

Meet jointly with electronic equipment representatives and Government representatives to exchange information and agree on details of equipment arrangements and installation interfaces.

Record agreements reached in meetings and distribute record to other participants.

Adjust arrangements and locations of equipment cabinets, consoles, lecterns and racks to accommodate and optimize arrangement and space requirements of equipment.

Coordinate with related trades to schedule the Work and ensure a complete installation in accordance with the schedule outlined by the Owner.

Coordinate all IP device requirements with the Data vendor, Owner, and Contractor.

Coordinate all network connectivity requirements with the low voltage cabling contractor and Owner.

1.13 QUALITY ASSURANCE

1.13.1 Audio Visual Floor Plans and Detail Riser Diagrams

Post construction, include dimensioned plans, sections and elevations. Detail equipment assemblies and indicated dimensions, weights, loads, required clearances, method of field assembly, components, and location and

size of each field connection.

Provide point-to point wiring diagrams and typed wire lists identifying every connection for information. Include electronic devices such as switches, transformers, and terminal blocks. Include electronic devices such as switches, transformers, and terminal blocks. Indicate locations of all components. Identify cables by types, colors and wire numbers.

Provide system plans showing all device locations and ceiling distributed loudspeaker layouts with wattage tap settings.

Provide conduit riser diagrams showing connection of all devices, required conduits sizes along with types and quantities of cables to be used and cable identification tags.

Provide rack layouts, indicating the proposed arrangement of rack mounted equipment including junction boxes and locations of conduit penetrations

Submit fully dimensioned construction details of all panels , plates, devices, control stations and other off the shelf or custom fabricated items or modifications (e.g. installation of audio/visual equipment in lecterns). Include complete parts lists and, as required, schematic diagrams.

Submit mounting and support details for distributed ceiling loudspeakers, and all other items mounted overhead complete with parts lists and dimensions. Include a full plan view, front and side elevations of each item with corresponding support structure and mounting hardware. Verify load ratings of all hanging components including attachment hardware.

Submit electronic copies of any custom programming including source codes. Include printed copies of all control screens, wiring pages, etc.

1.13.2 Product Standards

All equipment and materials contained herein shall be the products of recognized manufacturers and shall be new.

New equipment and materials:

1. Shall be purchased from a reputable supplier that has direct relationship with the manufacturer's factory-no counterfeit devices are allowed.
2. Shall be Underwriters Laboratories, Inc. (U.L.) or Technischer Überwachungs-Verein (TÜV) listed and approved where specifically called for or where normally subject to such U.L. or TÜV labeling and/or listing services.
3. Shall be without blemish or defect.
4. Shall be products that meet with the acceptance of the agency inspecting the audiovisual systems work.

It is the intent of these specifications that, wherever a manufacturer of a product is specified and the terms "other approved" or "approved equal" are used, the substituted item must conform in all respects to the specified item. Consideration will not be given to claims that the substituted item meets the performance requirements with lesser construction. Performance as delineated in schedules and in the specifications shall be interpreted as minimum performance.

Substituted equipment or optional equipment, where permitted and approved, must conform to space requirements. Any substituted equipment that cannot meet space requirements, whether approved or not, shall be replaced at the contractor's expense. Any modifications of related systems as a result of substitutions shall be made at the contractor's expense.

The approval of shop drawings or other information submitted in accordance with the requirements hereinbefore specified, does not ensure that the audiovisual consultant, architect or owner attests to the dimensional accuracy, dimensional suitability of the material or mechanical performance of the equipment. Approval of shop drawings does not invalidate the drawings and specifications.

Substitutions of equipment shown on the schedules or designated by model number in the specifications will not be considered if the item is not a regular catalogued item carried by the manufacturer.

Within the specifications, certain manufacturers have been listed. These manufacturers are listed for example purposes (unless followed by the term "no exceptions"). The contractor may substitute manufacturers and models that may be more cost effective or readily available than that specified. However, all substitutions shall meet or exceed the specified functional and technical requirements. Acceptance of such substitutions is at the discretion of the consultant and/or owner.

1.14 WARRANTY AND MAINTENANCE

The AV contractor shall provide a one-year warranty for the work. The warranty shall cover all work, systems and subsystems against defects in materials and workmanship. The work, as specified herein, including all materials and labor but excepting any existing devices and equipment that are incorporated in the completed work, shall be warranted to be free from defects in design, workmanship and materials. Further, the contractor shall warrant that the completed systems, including all components (except those that are existing or provided by others), are of sufficient size and capacity to fulfill the requirements of the specifications.
The warranty shall be valid for a period of one year following the date of system acceptance by the owner. System acceptance shall commence when all parts, components, subsystems and systems have been tested, shown to be working in accordance with the specification and approved by the owner.

At project closeout, provide to Owner or Owners Representative an executed copy of the manufacturer's standard limited warranty against manufacturing defect, outlining its terms, conditions, and exclusions from coverage.

In the event that defects in the materials and/or workmanship are identified during the warranty period, the contractor shall provide all labor and materials as may be required for prompt correction of the defect. Provide written notice to the owner documenting any work performed during the warranty period, including any preventative maintenance performed. Provide loaner equipment that is fully compatible with the audiovisual systems for any equipment not field repairable.

Loaner equipment for components that must be shipped to/from the manufacturer or distributor shall be on site and operational within 48 hours of the component failure. Furnish lists of equipment that will require shipment from the manufacturer or distributor and lead times associated with that equipment.

1.15 OWNER'S AUTHORIZED REPRESENTATIVE TRAINING

The Contractor shall provide training in a two-session format:

1. Train system users and administrators.
2. Train technical-support personnel.

There should be a minimum of eight hours of training provided in one-hour sessions. System user training should include the following material and topics:

1. Operation of each audiovisual system control panel and device.
2. Connection of source devices.
3. Run through of mock meeting / event(s) based on room use cases.

Technical-support personnel training should include the following material and topics:

1. Operation and replacement of common replacement items
2. General care and systems maintenance.
3. Cobra Net configuration and switch settings.
4. Provide instruction on the frequency of UPS battery replacement and the replacement process.
5. Process for resetting system.
6. Hardware Chassis configuration, replacement of modules and chassis.
7. Software loading and configuration.
8. Support phone and e-mail contact information.

The AV Contractor shall provide on-the-job training by an instructor who is fully knowledgeable in the design and operation of the system(s)
All training shall take place after the systems are operational but not before system acceptance has occurred. Contractor may have to return to the site once building is in operation for further training activities.

PART 2 PRODUCTS

2.1 AUDIO-VISUAL SYSTEMS

2.1.1 System Description

It is the intent of these specifications to provide a complete working audiovisual system ready for the owner's use. System acceptance shall be judged on the successful adherence to the installation instructions of this specification.

Any item not specifically shown on the drawings or called for in the specifications but is normally required to conform to the intent is to be considered part of the work.

Any given item of equipment or material shall be the product of one manufacturer throughout the facility. Multiple manufacturers of any one item will not be permitted, unless specifically noted otherwise.

These specifications are equipment and performance specifications and are considered to be one all-encompassing package with the drawings. Actual installation shall be as engineered by the contractor with prior approval by the design professional.

Provide audio visual devices and equipment with performance levels and capacities as noted herein.

2.1.2 Visual Systems

Visual systems will comprise direct view and display devices in all areas appropriate to the size of the viewing area. Display devices will be a combination of native 4:3 and 16:9 aspect ratio and UXGA and WXGA format resolution respectively.

All displays shall be capable of displaying digital sources such as high definition component and RGBHV signals.

All individual area AV systems shall be provided with a universal scalar to re-map all incoming traditional and computer video sources to the native resolution of the display device and eliminate set up adjustments when changing sources.

All display devices shall be connected to the TCP/IP network for control, fault monitoring and maintenance functions via a separate V-LAN.

2.1.3 Audio Systems

All audio systems shall be based on programmable DSP processing for equalization, delays, routing and dynamics. The DSP processor will be controlled by the AV control system for adjustment of volume and other functions related to the configuration of the room and the source material being presented. The DSP processors will be LAN connected for maintenance, remote configuration and software updating.

Larger spaces shall be provided with separate speech and program amplification and speaker systems. Speech systems will use distributed ceiling speakers, while program reinforcement will be provided by wall mounted speakers adjacent to the screen or display. Presets in the DSP shall retain the default optimum settings for these loudspeaker systems. The owner shall in addition have the option, via the control system and DSP programming to mix speech and program audio to either or both the distributed ceiling loudspeakers and the wall mounted loudspeakers as desired.

In addition to video related audio sources, sound re-enforcement, background music and paging systems shall be provided as appropriate to the size and use of each area.

2.1.4 Control Systems

All areas shall be equipped with a network connected master control system. Control system data for operation, scheduling, help desk functions and fault monitoring of the rooms AV systems.

Each control system will stand-alone, a network failure will not leave any particular area disabled. Access to the control systems will be available from any LAN connected user with the appropriate IP addresses and passwords. Room control software will be installed on certain computers as directed by the client.

All individual areas will be equipped with programmable AV user interfaces comprised of wired color touch screen control panels.

Additional smaller panels (touch or hard button) shall be provided for AV and lighting control purposes.

The A/V controls system(s) will connect with the robotic camera control systems(s) to call presets appropriate to video conferencing.

2.1.5 Interface With Other Systems

Telecommunications - AV systems shall interface with IT for monitoring of each AV system

2.2 MATERIALS

Equipment, except GFE and materials shall be new , latest version at time of bid and shall conform to applicable UL or ANSI provisions.

Provide security covers on non user-operated equipment having front panel controls. Install covers at the conclusion of acceptance testing. Rack slides shall be provided for all equipment requiring access to side or top panels for routine adjustment or cleaning; all video cassette tape recorders and all picture monitors over 20 pounds.

Power rack slides and mounts for the GFE requiring rack mounting.

2.3 AUDIO PRODUCTS

2.3.1 Ceiling Mounted Loudspeaker

Type A: Full range wide dispersion ceiling tile speaker, 2'x2', 3.25" depth, for 8 ohm direct operation or 70volt/100volt operation with selectable power taps, frequency response 68Hz to 18kHz, 16 watts continuous pink noise and 32 watts continuous program UL2043 plenum rated enclosure, 3" horn-loaded, full range driver, white perforated grille to match air conditioning vents.

Acceptable Manufacturers: (Substitution shall be by an approved means.)

Atlas Sound
Extron
JBL
Tannoy Limited2

2.3.2 Audio Distribution Amplifier

Rack mountable audio distribution amplifier 1 x 2 1 x 4 configuration with RS232 port for control.

Acceptable Manufacturers: (Substitution shall be by an approved means.)

Extron
Kramer
Radio Design Labs

2.3.3 Power Amplifier

PA #: Power amplifiers to be solid state throughout and located in the equipment racks, 70volt, 8-ohm, 4-ohm operation, control and DSP via Ethernet port on the back of the amplifiers. Amplifiers to have frequency response of +1 dB from 20 Hz to 20 kHz with less than 0.1 THD at rated

output. Provide isolation transformer(s) where required to minimize noise. Each amplifier to be equipped with integral signal processing. Processing shall be via 24-bit digital with 32 bit floating point DSP. Processing including but not limited to: mixer, shelving, parametric equalization, delays, limiter, gain, load monitoring, current monitoring, individual amplifier, audio return monitoring and sequential power on/off. Use control hardware, PC interface card, HUB, Ethernet gateway and RS 232 interface as necessary. Provide the latest software at the time of installation. Control software to reside in a separate PC (CPU). Use control modules as shown on the Contract Drawings.

Type 1: Two Channels - 200 Watts per Channel, 70V, 4 Ohm, 8 Ohm, 16 Ohm with amplifier control module.

Type 2: Two Channels - 400 Watts per Channel, 70V, 4 Ohm, 8 Ohm, 16 Ohm with amplifier control module.

Acceptable Manufacturers: (Substitution shall be by an approved means.)

Crown
Extron
QSC

2.3.4 Audio Patch Panel

Two rows of twenty four jacks, on 2 U rack panel. Black phenolic resin/anodized panel with cadmium plated steel frame. Long frame 1/4" jacks wired by harness to a three-pin type quick connection rear panel. Wire with normals, half-normals and no-normals as required. Make lettering white or black to contrast strip color. Some unwired jacks or labels may be provided for future equipment.

Color 1- 24" patch cable
Color 2- 36 " patch cable
Color 3- 48 " patch cable
Color 4- 60" patch cable

Acceptable Manufacturers: (Substitution shall be by an approved means.)

Behringer
Neutrik
Switchcraft

2.3.5 Digital Signal Processor

Furnish the most current generation digital audio signal processor for audio processing. Computer control includes independent or group adjustment of levels, rack mounted. Furnish with the maximum capacity and highest performance RAM, high-speed digital audio buss, passive backplane architecture, 56KV.90 modem, 10/100 TX Ethernet card and remote client server software application. Provide an uninterruptible power supply for operation of the CPU, breakout boxes and digital signal processors located adjacent to the CPU. Provide and locate CPU, monitor, keyboard, and mouse in equipment racks. Complete programming shall be done under the supervision of the manufacturer's representative. All DSP configuration files shall be as per manufacturer's recommendations and must be approved by the COR and the A-E. All programming shall be the responsibility of the Contractor.

Acceptable Manufacturers: (Substitution shall be by an approved means.)

Axia
Biamp Systems
BSS Audio
Peavey

2.3.6 Audio Conference

(Digital Hybrid) Digital telephone interface to provide add-in phone calls to the video conference CODEC or audio conference capability.

Acceptable Manufacturers: (Substitution shall be by an approved means.)

Axia
Comrex
Extron
Polycom

2.3.7 Conferencing DSP

Central control unit with conference media control. Integrated power supply unit and processor for digital control of up to 64 microphone units. 2 multifunction buttons and LC display with 2 lines/16 segments for menu driven system operation and configuration. RS232 interface port on the front for system configuration with PC. RS232 interface for operators PC or external console. RS 485 for system extension or connection to a third party media control system. Two inputs for telephone level (20 mV) and line level (0dB). Recording output (250 mV) and a 3 pin XLR socket for transformer balanced line level output (+6dBm). Recording output is independent from the output volume adjustment. 19" rack mounting bracket. Ventilation louvers on top and bottom. All DSP programming shall be done under the supervision of the manufacturer's representative. All DSP configuration files shall be as per manufacturer's recommendations and must be approved by the Government and the Engineer. All programming shall be the responsibility of the Contractor.

2.4 VIDEO PRODUCTS

2.4.1 Scaling Presentation Matrix Switcher

All in one 8 x 4 matrix switcher, scaler, audio DSP and audio power amplifier. Inputs: 2 x Digital Twisted Pair (DTP), 6 x HDMI Outputs: 2 x HDMI, 2 x scaled DTP outputs. Integrated DTP inputs and outputs support transmission of video control , and audio up to 330 feet over a single CATx cable. Supports 4K and UHD signals at all inputs and on both HDMI outputs. Selectable scaled DTP output rates from 640x480 to 1920x1200 including HDTV. Local X/Y control panel and RS-232 control complete with 100 watt 70 volt mono power amplifier.

Acceptable Manufacturers: (Substitution shall be by an approved means.)

AMX
Crestron
Extron
Kramer

2.4.2 Scaling Presentation Switcher with DTP Extension

A. Eight input HDCP-Compliant Scaling Presentation Switcher with DTP extension integrates HDMI, HDTV, RGB, Video and audio sources into presentation systems. Inputs: 2 x HDMI, 2 x analog video; Outputs: two simultaneous video outputs over HDMI or DVI, two microphone line inputs with 48V phantom power available, HDMI audio embedding, HDMI audio de-embedding.

B. Eight input HDCP-Compliant Scaling Presentation Switcher with DTP extension integrates HDMI, HDTV, RGB, Video and audio sources into presentation systems. Inputs: 2 x DTP 230, 4 x HDMI, 2 x analog video. Outputs: three simultaneous video outputs over HDMI or DVI Control and analog audio up to 230 feet over a single CATx cable, two microphone line inputs with 48V phantom power available with Class D stereo or mono amplifier with 2 x 50 watts @ 4 ohms, 2 x 25 watts @ 8 ohms, 1x 100 watts @ 70 volts.

Acceptable Manufacturers: (Substitution shall be by an approved means.)

AMX
Crestron
Extron
Kramer

2.4.3 Universal VGA Input Board

Universal VGA Input Board with analog stereo, accepts RGBHV, HD, component video, S-video, and component video, supports computer-video 1920x1200 including HDTV 1080P/60 auto input format detection, analog-to-digital conversion, SD Pro-processing for de-interlacing of standard definition video.

Acceptable Manufacturers: (Substitution shall be by an approved means.)

AMX
Crestron
Extron
Kramer

2.4.4 Matrix Switcher HDMI Transmitter Board

Matrix switcher HDMI output board w/stereo audio with unity gain, 1080p (HDTV), 1920x1200 resolution which is maximum for a DVI-D link @ 60hz, digital video supported includes RGB digital video or digital component video actively buffered and HDMI range from 640x480 to 1920x1200, supports extended display identification data (EDID)and display data channel (DDC) using DVI and HDMI standards. Supports hot-plug detection (HPD)of displays as a pass-through signal, compliant with high bandwidth Digital Content Protection(HDCP) using DVI and HDMI standards, maximum data rate 6.75 Gbps per color, maximum pixel clock 165 MHz, switching speed 200ns max.

Acceptable Manufacturers: (Substitution shall be by an approved means.)

AMX
Crestron
Extron
Kramer

2.4.5 Matrix Switcher HDMI Output Board

Matrix Switcher HDMI output board w/stereo audio with unity gain, 1080p (HDTV), 1920x1200 resolution which is maximum for a DVI-D link @ 60hz, digital video supported includes RGB digital video or digital component video actively buffered and HDMI range from 640x480 to 1920x1200, supports HDMI audio (if using an HDMI to DVI adapter) supports extended display identification data (EDID)and display data channel (DDC) using DVI and HDMI standards. Supports hot-plug detection (HPD)of displays as a pass-through signal, compliant with high bandwidth Digital Content Protection(HDCP) using DVI and HDMI standards, maximum data rate 6.75 Gbps per color, maximum pixel clock 165 MHz, switching speed 200ns max.

Acceptable Manufacturers: (Substitution shall be by an approved means.)

AMX
Crestron
Extron
Kramer

2.4.6 Matrix Switcher HDMI Receiver Board

Matrix Switcher HDMI input board w/stereo audio with unity gain, 1080p (HDTV), 1920x1200 resolution which is maximum for a DVI-D link @ 60hz, digital video supported includes RGB digital video or digital component video actively buffered and HDMI range from 640x480 to 1920x1200 2K, supports extended display identification data (EDID)and display data channel (DDC) using DVI and HDMI standards. Supports hot-plug detection (HPD)of displays as a pass-through signal, compliant with high bandwidth Digital Content Protection(HDCP) using DVI and HDMI standards, maximum data rate 6.75 Gbps per color, maximum pixel clock 165 MHz, switching speed 200ns max.

Acceptable Manufacturers: (Substitution shall be by an approved means.)

AMX
Crestron
Extron
Kramer

2.4.7 Matrix Switcher Blank Plate

Switching matrix blank plate is a false faceplate that fits into an open matrix board slot on a matrix switcher frame.

Acceptable Manufacturers: (Substitution shall be by an approved means.)

AMX
Crestron
Extron
Kramer

2.4.8 Modular Digital Matrix Switcher

Modular digital matrix switcher expandable from 4x4 to 16x16, 15.2 Gbps data-rate digital backplane, compatible with all media and display products, fully digital signal routing, wide selection of input and output boards. Control using RS232 insertion from the Ethernet control port.

Acceptable Manufacturers: (Substitution shall be by an approved means.)

AMX
Crestron
Extron
Kramer

2.4.9 Switcher with Transmitter

Three input switcher with integrated transmitter, transmits HDMI or analog video, control and analog audio up to 230 feet over a single CATx cable, two HDMI inputs and one RGHBV or component video input, auto switching between inputs, supports computer-video 1920x1200 including HDTV 1080p/60 Deep Color and 2K, compatible with CATx shielded twisted pair. Vendor's cable strongly recommended for the installation.

Acceptable Manufacturers: (Substitution shall be by an approved means.)

AMX
Crestron
Extron

2.4.10 Twisted Pair Transmitter for HDMI

The twisted pair HDMI transmitter transmits video, audio, bidirectional RS232, IR and Ethernet up to 330 feet over a single CATx cable. Supports computer-video to 1920x1200 including HDTV 1080p/60 Deep Color and 2K, compatible with CATx shielded twisted pair cable, bidirectional RS232 and IR insertion for AV device control, HDMI loop-through with selectable audio control. Vendor's cable strongly recommended for the installation.

Acceptable Manufacturers: (Substitution shall be by an approved means.)

AMX
Crestron
Extron

2.4.11 Mono 70/100V Amplifier

Mono 70/100V Amplifier, 200 watts rms output power @ 70 or 100 volts, energy star, professional grade signal to noise and THD + N performance, class D ripple suppression, convection cooled fanless operation, ultralow inrush current eliminating need for power sequencer.

Acceptable Manufacturers: (Substitution shall be by an approved means.)

Atlas Sound
Extron
Radio Design Labs

2.4.12 Video Patch Panel

Two rows of twenty-four jacks, on 2U rack panel. Black phenolic resin/anodized aluminum panel with cadmium plated steel frame. WECO front panel jacks wired by harness to a BNC type rear connection panel. Full normaling un-terminated switching shall be provided. Letters shall be white or black to contrast strip color as noted in drawings. Some unwired jacks or labels may be provided for future equipment.

Acceptable Manufacturers: (Substitution shall be by an approved means.)

AVP
Canare
TecNec

2.4.13 Pan Tilt Zoom Camera

PTZ color CCD camera with at least 1152 (H) x 648 (V) effective CCD pixels, 26X optical zoom, NTSC output, auto iris, motorized zoom lens, Single 20-pin multi-connector with S-Video and RS232C control signals, 200 degrees horizontal pan, 30 to 90+ degree tilt. RS232 controlled. Powered by 12/14 VDC. Mounts in a recessed wall enclosure.

Acceptable Manufacturers: (Substitution shall be by an approved means.)

Cisco
Panasonic
Polycom
Sony

2.4.14 Camera Wall Enclosure

Recessed in wall camera box to allow installation of PTZ video conference camera. Plenum rated steel enclosure with conduit knockouts, adjustable tripod mounting screw slot to secure camera to back box. Curved clear acrylic non-reflective lens cover. ABS self-trimming bezel.

Acceptable Manufacturers: (Substitution shall be by an approved means.)

To be determined.

2.4.15 Video Conferencing

Video Conference system consisting of view camera, codec, microphone array(not with view camera model), cables and remote control with CODEC capable of connection to 2Mbps IP based networks. Video Standards & Protocols: H.261, H.263 ++, H.264, H239 & 12 others. Video inputs: 1x HD camera, 1xDVi-I Video output, 1 x HDMI, Participant video resolution 720P to 1080P, 4SIF, SIF, CIF, QSIF, QCIF. Content video resolution WSGA, SXGA, HD, XGA, SVGA. Video Outputs: 720P, 1080P, XGA and SVGA. Cameras: Fixed SMPTE 296M, 274M, Pan tilt zoom EPTZTU 1920 x 1080. Audio Input: 1 HDX microphone array, 1x3.5mm stereo mini(PC Audio), Audio Output 1x Aux main out (RCA), Digital Audio on HDMI cable, network compatible, user interfaces include directory services, system management, secure password authentication, with touch control panel, or speakerphone integration.

Acceptable Manufacturers: (Substitution shall be by an approved means.)

Cisco
Lifesize
Polycom

2.4.16 DVD Player

DVD Player plays compatible 3D and standard Blu-ray disc, DVD, CDs, SACDsk and Rewriteable CDs, 4K video upscaling for use with Ultra HD TVs, built in Wi-Fi for wireless streaming with 200+apps for playing TV shows, movies and music including Netflix, Hulu Plus, Amazon Instant Video, You Tube and

Pandora, Miracast compatible, quick start/load mode, socialize feature, remote control. Video: selectable video resolution up to 1080P with video up-conversion for DVD, built in audio decoding for Dolby, HDMI output, coaxial digital audio output, Ethernet port for internet connectivity.

Acceptable Manufacturers: (Substitution shall be by an approved means.)

Denon
Panasonic
Polycom
Sony

2.4.17 LCD Flat Panel Video Display

LCD Flat Screen, Native Resolution 1920 x 1080, Max Colors 1.06 billion, computer input signals-digital (DVI 1.0 standard-compliant) Analog RGB (0.7Vpp-75ohm), video color system-NTSC, power management, input terminals PCAV digital, PC analog, Audio, Serial(RS232), output terminals RCA pin (L/R)x1, Serial (RS232)complete with AV expansion board PN-ZB-01 with optional digital analog, composite video s video and component video inputs and audio inputs and optional digital outputs and external speaker outputs and 10BASE-T/100BASE-TX.

Acceptable Manufacturers: (Substitution shall be by an approved means.)

NEC
Panasonic
Samsung
Sharp

2.4.18 Flat Panel Video Signage Display

LED Flat Screen video display for dynamic indoor digital signage, Native Resolution 1920 x 1080 from analog RGB, digital RGB and HDTV video sources, slim design with cabinet depth of only 2-1/4"with edge lit LED backlight, built-in 10 watt per channel speakers, with extensive interface capability including inputs: HDMI, Mini D-Sub 15-pin RGB, DVI-D, Display Port, stereo audio, video BNC, component BNC, stereo audio, RCA pin (L/R) x 1,and outputs: RS232, DVI-D, stereo audio RA pin (L/R)x1 and RJ-45 LAN display control. LCD Flat Screen, Native Resolution 1920 x 1080, Max Colors 1.06 billion, computer input signals-digital (DVI 1.0 standard-compliant) Analog RGB (0.7Vpp-75ohm), video color system-NTSC, power management, input terminals PCAV digital, PC analog, Audio, Serial(RS232), output terminals RCA pin (L/R)x1, Serial (RS232)complete with AV expansion board PN-ZB-01 with optional digital analog, composite video s video and component video inputs and audio inputs and optional digital outputs and external speaker outputs and 10BASE-T/100BASE-TX in three sizes, Type 1-80inch, Type 2-60inch, Type 3-55inch. Provide media player which easily attaches to rear of display for all-in -one digital signage display.

Acceptable Manufacturers: (Substitution shall be by an approved means.)

NEC
Panasonic
Samsung
Sharp

2.4.19 Interactive Whiteboard

Interactive Whiteboard 77-1/2"x49-1/2"x5-1/8" (WxHxD, 16:10 aspect ratio that measures 87 inches on the diagonal, 4000 x 4000 touch resolution, pen tray locking feature, optical sensors in the pen tray to determine when you lift a pen or the eraser from the tray with LED lights showing the active tool, two stereo RCA jacks, stereo input reserved for composite video connector audio and one stereo input reserved for mini-Din connector audio,3.5mm stereo jack - audio input with dual signal analog mixer, auto image synchronization (auto tracking/frequency position adjustment/source detect/phase detect). feature rich notebook collaborative learning software.

Acceptable Manufacturers: (Substitution shall be by an approved means.)

Hitachi
Panasonic
Smart Technologies

2.4.20 DVI Extender (All Spaces)

DVI Extender to be used for all spaces as indicated on drawings. Extender shall be compatible with PC, MAC and HDTV,, Support all resolutions up to UXGA (1600 x 1200), 100 meters range over UTP cabling, provide with DVI cables, adapters and power supply.

Acceptable Manufacturers: (Substitution shall be by an approved means.)

Atlona
Black Box
Geffen

2.4.21 Image Geometry Correction (All Spaces)

Image correction technology for simultaneous 3D keystone correction (up to 40 degrees horizontally and 30 degrees vertically) at throw rations from 0.8 to 8.0. Use this device where the project is off-centered from the screen. Provide with rack mount kit.
Acceptable Manufacturers: (Substitution shall be by an approved means.)

To Be Determined

2.5 BULLETIN BOARD DIGITAL SIGNAGE SYSTEM

2.5.1 Digital Signage System

The digital signage system package shall include the hardware digital media player, the management software and spare parts for complete and useable system. Digital signage system shall use the existing building 10BASE-T or 100BASE-TX LAN with POE or wireless 802.11a,b,g,n dual band, government furnished servers and graphical user interfaces (personal computers)to operate the system. The media player shall deliver HD video (MPG-1,MPEG-2, MPEG-4 Part 10 and MP3 audio, over User Datagram Protocol (UDP) or RTP or RTSP in both standard and high definition (SD and HD) formats. Media play shall be capable of accepting two HD video streams simultaneously and each player shall be capable of supporting two displays. output to displays is fully customizable.

1. All display locations shall be provided with flat panel signage

displays that are linked to the signage network servers containing a pre-loaded database of information, event details, graphics, pictures, streaming video, etc.

2. Management System for the digital signage will include the necessary control and data storage for all flat panel displays. The system will have the capacity/bandwidth to provide the functions described and work on the principal of fast Ethernet network. Processor speeds shall be selected to ensure steady, continuous picture flow on all screens with no hangs or buffering. A web based graphical user interface, command line open management application programming interface will be furnished by the US Government to monitor and control the displayed media.
3. The display management software shall allow still graphics files and full video files, "play lists" to be created, play the sequences on a designated display or designated group of displays.
4. The system will include any software, remote controls and spare parts necessary for ease of operation and maintenance. An acceptable manufactured product is the CISCO 4400G media player system which included the software and media player. PC and Server to be provided by the US Government.

2.5.2 Video Wall MDP

The video wall shall consist of multiple 16:9 aspect ratio 42" Modular flat panel displays. Modular display panels shall support VGA/SVGA/XGA, SXGA (650x350 - 1600x1200) PC resolutions. Video features shall include NTSC video standards. Brightness 1000CD/m2, greater than 160 degree viewing angle, 3000:1 contrast ratio, 16.7 million colors with a cell pitch of 1.08 mm (H) x 1.08 mm (V). MDP panel shall have analog, RGB, Component, composite, YC, DVI-D inputs. Seam size between displays shall be less than 5 mm. Building in video wall processor with user programmable control for up to 254 devices. Support for RS232 remote control.

Acceptable Manufacturers: (Substitution shall be by an approved means.)

To Be Determined

2.6 SATELLITE MASTER ANTENNA TELEVISION

Satellite Antennas - Fixed Nominal 1.8m & motorized Horizon to Horizon 3 m Diameter aluminum antenna assemblies consisting of reflectors, feed arms and dual LNBs for full dual polarity operation. Supply with roof mount and ballast. Tie mount with safety cable to structure and electrically bond to structure. Dish antennas shall be provided with stand tilting and fixing arrangements with other devices as required by the system supplier to make satellite dish antennas complete in all respects. (note: The required satellite TV services shall be selected by the Government).

1. All mounting and fixing materials shall be protected against corrosion by heavy anodic coating or corrosion resisting compound.
2. The antenna shall be fixed to a mast. Masts shall be heavy duty hot dipped galvanized steel securely fixed to ensure resistance to the strongest winds encountered in the locality.
3. Finalize satellite antenna locations in coordination with the Architect. It is the Contractor's responsibility to design with coaxial or fiber network for the TV signal distribution to receive required DB levels at the head end.
4. Lightning Protection - Provide all LNBs with surge protector ground blocks connected to the building air-gap system or antenna driven

ground rod system as appropriate on each antenna IF lead. RFI integrity shall be greater than 100dB.

5. Satellite IF Distribution. If splitting, distribution, routing and amplifications shall be as per manufacturer recommendations. All line signal multi-switches used must be with die-cast housing for indoor distribution application. All these components must be suitable for F-type connectors.
6. The signal level for each polarity as measured at each or any correctly terminated outlet shall be accurately adjusted to the manufacturer's recommendations.
7. The system shall comply with CCIR regulations.
8. The system shall be such that the short-circuiting or open circuiting of any outlet socket shall not significantly affect signals at other outlets.
9. Spurious radiation shall be within the limits laid down by the NTSC.

2.7 CONFERENCING SYSTEM

2.7.1 Boardroom and Lecture Halls

Microphone/Speaker Station (MS): Microphone, speaker and push to talk button, Digitally controlled system for the use of teacher or students. four mounting holes for anti-vibration installation. Connection of up to three external buttons such as microphone, priority and clear button is possible to the terminal board as well as two external LEDs, an external loudspeaker for decentralized sound reinforcements and an external microphone. Green illuminated LED indicates switched on microphone. Red illuminated LED indicates request to talk. Programmable priority function of the chairman's microphone unit such as switching on only or switching on and clearing or muting of the switched on student's microphone units simultaneously. Gooseneck microphone with total length of 16 inches and diameter 3/8 inch. Illuminated ring to indicate the ready to talk condition. Cover ring in aluminum colored programming and address. Fully shielded metal housing, Dimensions (WxHxD) 3" x 1-3/4" x 8". Locate these devices in a custom plate.

2.7.2 Conference Rooms & Classrooms

Microphone/Speaker Station (MS): Microphone, speaker and push to talk button in a desktop type unit. Digitally controlled system unit for the use of teacher or students. Programmable priority function of the chairman's microphone unit such as switching on only or switching on and clearing or muting of the switched on students microphone units simultaneously. Devices to be located as directed by COR.

2.8 REMOTE CONTROL SYSTEM CENTRAL

2.8.1 Remote Control System Master Card Frame

1. Utilize a real time, event driven, multi-tasking, multi-threaded operating system with dual bus.
2. Utilize a Motorola cold-fire processor at no less than 257 MIPS
3. High-speed processor shall communicate directly with Ethernet, control ports, and proprietary control network utilizing high-speed, parallel bus infrastructure. Control processors that communicate only via a serial bus shall not be accepted.
4. Control processor contains 36 MB of memory with expansion via compact flash, plug in cards
5. Control processor shall accept IBM micro drive plug-in cards.

6. Control processor shall utilize a FAT 32 field structure.
7. Support internal communications speed via two, independent communications busses. First control bus speed shall be at least 40Mb/s; second control bus speed shall be at least 300Mb/s
8. Support 10/100Base T Ethernet communications utilizing 300Mb/s bus. Additional 300 MB/s bus cards will include dual-port Ethernet cards capable of supporting 10 or 100BaseT communications; dual port. Ethernet cards shall be offered with USB (universal serial bus) communication. 300 MB/s bus shall be capable of supporting MPEG decoding of streaming Ethernet packets.
9. Control system shall be capable of firing all internal IR ports simultaneously.
10. Support TCP/IP and SNMP communications directly (communications through control system bus link shall not be accepted).
11. Support DHCP (dynamic) as well as static IP addresses.
12. Control system shall support complete LAN administration via HTML pages.
13. Control system shall be capable of containing a built-in network address translator (NAT).
14. 100% compatible with all PCs; Mac, UIX, etc LANs.
15. Full API (Applications Interface) directly to control system via TCP/IP for integration with visual Basic C++, Java, etc applications. API support through included ActiveX module and/or Dynamic Link Library (DLL).
16. Remote Control System Mainframe Y-Bus: Built-in 12 slot for CNX and 2-series expansion cards. Z-Bus: Four expansion card slots, Extron network interface. Front and rear programming ports. Eight port expander hub 19" rack mount or shelf mounted. RACK series with control cards and system network master.
17. Control Interfaces (as required): Specific device controller cards for insertion into master or slave card frames or outboard interface boxes connected to master by remote control buss or network including: RS232/RS422 Control, Relay Control Infrared/Serial Control Card, Network Interface Card, Input Output (I/O) and Voltage Ramp interfacing.
18. Support RS-485 token passing network with data communication for a minimum distance of 5000 feet.
19. Support minimum of 253 proprietary network devices simultaneously.
20. Support direct communication to LAN based thin servers.
21. Control system shall support object-oriented logic based programming language and a C-like programming language. Both programming types are supported to run simultaneously and integral to each other.
22. Control system manufacturer shall provide Windows-based graphical programming software for drag and drop object oriented programming for the control system operation.
23. Control system manufacturer shall provide windows-based graphical programming software, which is self-documenting in that it generates a symbolic flow diagram printout from the system program.
24. The remote control system shall consist of networked, "master to master" addressing to control all functions associated with the audio system DSP's, source transport controls and video routing/input selection.
25. Multiple-Buss Port Interface (as required): Communication buss expander for multiple buss devices to interface and isolate touch panel to master card frame system.
26. Power Supply (PS): Power supply for interfacing local control panels (Voltage and current as required by the remote control system manufacturer). Quantity as required.

Acceptable Manufacturers: (Substitution shall be by an approved means.)

AMX
Crestron
Extron

2.8.2 Programming Software

1. Provide system with all necessary programming software. The Contractor shall provide source code with a competent, factory-trained technician, familiar with the system source code on site during final checkout and acceptance. Source code and copyrights shall become the property of the Government at final acceptance of the audio visual systems and shall be forwarded to the Government with original code and all programming software and two (2) backup copies in CD-ROM format.
2. The Manufacturer or Contractor shall perform all system programming prior to delivery to the jobsite. Provide control system complete with all necessary power supplies, interconnecting cables and connectors, and other accessory items to ensure a complete and working control system conforming to the design intent and parameters as shown on the Contract Drawings. Control system Integrated Master with audio/video switching. All control system programming shall be done under the supervision of the manufacturer's representative. All configuration files shall be as per manufacturer's recommendations and must be approved by the Government and the engineer. All programming shall be the responsibility of the Contractor.

2.8.3 Remote Control System Individual

1. Control system shall consist of networked, "master to master" addressing to control all functions associated with the audio systems DSP's, local room input select, microphone/line level select, local room volume and video routing/input selection.
2. Provide system with all necessary programming software. The contractor shall provide source code with a competent, factory trained technician, familiar with the system source code on site during final checkout and acceptance. Source code and copyrights shall become the property of the Government at final acceptance of the audio visual systems and shall be forwarded to the Government with original code and all programming software and two (2) back-up copies in CD-ROM format.
3. The Manufacturer and Contractor shall perform all system programming prior to delivery to the jobsite. Provide control system complete with all necessary power supplies, interconnecting cables and connectors, and other accessory items to ensure a complete and working control system conforming to the design intent and parameters as shown on the Contract Drawings. All control system programming shall be done under the supervision of the manufacturer's representative. All DSP configuration files shall be as per manufacturer's recommendations and must be approved by the Government and the Engineer. All programming shall be the responsibility of the contractor.

2.8.4 Tabletop Control Touch Panel

TP2 - 10" Wired Color Touch Panel: 1024 x 600 resolution and 18-bit color depth, internal MTP (twisted pair) receiver included which accepts either S-video or composite video signals on a full motion video display for preview and monitoring using video over twisted pair technology. Touch pad is fully configurable using a graphical user interface and Global configurator with ready to use templates. Built in speakers provide audio

during the full-motion video preview and audible feedback from button presses. Power supplied by power over Ethernet with PoE injector provided. Mountable on tabletop or mounts on a VESA mount. Compatible with all control processors.

Acceptable Manufacturers: (Substitution shall be by an approved means.)

AMX
Crestron
Extron

2.9 WALL PLATE TRANSMITTERS AND RECEIVERS

2.9.1 Two Input Wall Plates Transmitter

Long distance two input DTP transmitter for HDMI and VGA: transmits HDMI or video control and analog audio up to 330 feet. One HDMI and one RGBHV video input, auto-switching between inputs, supports computer-video to 1920x 1200 including HDTV 1080p60 Deep Color and 2K. Compatible with CATx shielded twisted pair cable. Vendors cable strongly recommended for the installation.

Acceptable Manufacturers: (Substitution shall be by an approved means.)

AMX
Broadata Communications
Crestron
Extron

2.9.2 Two Input Wall Plates Receiver

Long distance two input DTP receiver for HDMI plus control and analog audio up to 330 feet over a single CATx cable. Supports computer-video to 1920 x 1200 HDTV 1080p/60 Deep Color UHD and 4K resolutions. Accepts additional analog stereo audio signals. Supported HDMI specification features include data rates up to 10.2 Gbps Deep Color up to 12-bit HD lossless audio formats and CEC pass-through. Compatible with CATx shielded twisted pair cable. Vendors cable strongly recommended for the installation.

Acceptable Manufacturers: (Substitution shall be by an approved means.)

AMX
Broadata Communications
Crestron
Extron

2.10 WIRED NETWORK GEAR

2.10.1 Gigabit Edge Switch

Managed Gigabit 10 port Edge Switch includes two combination mini-GBIC ports, capable of supporting high bandwidth applications complete with security and advanced network features, easy to configure and manage with intuitive browser based tools.

Acceptable Manufacturers: (Substitution shall be by an approved means.)

c
Cisco

HP
Netgear

2.10.2 Extenders

HDMI Twisted pair extender, transmits HDMI plus control and analog up to 230 feet over a single CATx cable, supports computer-video to 1920x1200 HDTV, 1080 Deep Color, UHD and 4K resolutions, accepts additional analog stereo audio signals, supports data rates up to 10.2 Gbps, Deep Color up to 12-bit, 3D, HD lossless audio formats and CEC pass-through. Vendor cable is strongly recommended for optimal performance.

Acceptable Manufacturers: (Substitution shall be by an approved means.)

Atlona
Black Box
Extron

2.10.3 IP Link Control Processor-Type 1

IP link control processor shall be provided with the optional control interfaces, 10/100BASE-T Ethernet with RJ-45 connector, Web Server with 200 simultaneous sessions, 975 MB of non-volatile memory or 6 RS232 bi-directional or 2 RS-232, RS-422, RS-485 (optional) with 5-pole pin connectors, flexible I/O control interface with 4 analog input or digital input/output (configurable), eight programmable IR Serial control ports, relay control interface(8 relays),and switched DC power output.

Acceptable Manufacturers: (Substitution shall be by an approved means.)

AMX
Black Box
Crestron
Extron

2.10.4 IP Link Control Processor-Type 2

IP link control processor shall be provided with Ethernet monitoring and control, supports touch panels, three bi-directional RS232 serial ports for universal control of display devices, switchers and other equipment, four IR ports, four relays, four contact closure inputs.

Acceptable Manufacturers: (Substitution shall be by an approved means.)

AMX
Black Box
Crestron
Extron

2.10.5 USB Extender

USB extender standard specification of USB 1.1.1.0 operates at USB 1.1 speed of 12Mbps, embedded USB transceivers at both ends to prevent signal loss, 10/100 Base-T Ethernet interface for ease of extension up to 150 feet, master unit and remote unit, RoHS compliant.

Acceptable Manufacturers: (Substitution shall be by an approved means.)

Comprehensive USB Extender

Tripp Lite

2.11 CONTROL COMPUTERS

2.11.1 Rack Mounted Computers

Rack mounted industrial grade PC with the most current processor and highest performance RAM at the time of installation. Two RS-232 ports, dual hard drives, high speed modem, Ethernet card, remote client server software application and 15" LCD monitor with custom rack mount shelf. Locate CPU, monitor, keyboard and mouse in equipment racks as sown on rack elevation drawings.

Acceptable Manufacturers: (Substitution shall be by an approved means.)

To Be Determined

2.12 DESKTOP COMPUTERS

Desktop PC with the most current processor and highest performance RAM at the time of installation. Two RS-232 ports, dual hard drives, high speed, modem, Ethernet card, remote client/server software application and 15" LCD monitor. Locate CPU, monitor, keyboard, and mouse at locations indicated in this document. Manufacturer names and model numbers shall be verified with the Government IT department.

Acceptable Manufacturers: (Substitution shall be by an approved means.)

To Be Determined

2.13 PROJECTION SCREENS, PROJECTOR LIFTS AND MOUNTS

2.13.1 Flat Panel Displays Mount

Provide ceiling mounts for the suspension of two flat panel displays with the following: roll adjustment: 3 degrees pitch adjustment: 5 degrees up, 15 degrees down on gravity-centered axis point, manual yaw adjustment: 360 degrees, use pipe to secure and conceal cables. Coordinate mounting methods, loads and finishes with other trades. Verify field conditions prior to installation. Install as per manufacturer recommendations.

2.13.2 Flat Panel Display Wall Mount (Articulated Arm)

Wall mount shall allow vertical , lateral and tensional tilt tension adjustment. Install the displays as mounting methods as instructed by the manufacturer, support the mount from wall/structure as per manufacturer recommendations. Verify field conditions prior to installation.

Acceptable Manufacturers: (Substitution shall be by an approved means.)

Chief
Omnimount
Peerless

Full Swing Wall Mounts:

1. Flat Panel Dual Swing Arm Wall Mount (10 inch-32 inch Displays):

   a. Maximum Extension: 15.94 inches (405 mm).

b. Tilt: +/-15 degrees.
c. Pivot: 180 degrees.
d. Weight Capacity: 40 lbs (18.14kg).

2. Flat Panel Dual Swing Arm Wall Mount (26-45 inch Displays):

a. Maximum Extension: 20.38 inches (518 mm).
b. Swivel: 180 degrees.
c. Tilt: +/-15 degrees.
d. Weight Capacity: 75 lbs (34kg).

3. Flat Panel Dual Swing Arm Wall Mount (42-71 inch Displays):

a. Maximum Extension: 37 inches (940 mm).
b. Tilt: +5 degrees / -17 degrees.
c. Roll: +/-2.5 degrees.
d. Swivel: 90 degrees.
e. Weight Capacity: 200 lbs (90.7kg).

Fixed Wall Mounts:

1. Flat Panel Fixed Wall Mount (26-50 inch Displays):

a. Depth from Wall: 1.25 inches (32 mm).
b. Weight Capacity: 125 lbs (56.7kg).

2. Fixed Wall Mount (55-75 inch Displays):

a. Depth from Wall: 1.96 inches (50 mm).
b. Weight Capacity: 250 lbs (113kg).

2.14 WIRE AND CABLE

2.14.1 Multi-pair Audio Cable (As Required)

Audio cable to be multi-pair, individually shielded, CL2 rated; 22AWG, stranded; each pair to be individually jacketed and numerically identified, capacitance 25pF/foot. Cable to be UL CMR listed.

2.14.2 Audio Cable (As Required)

Audio cable to be jacketed and shielded pair 22 AWG stranded; capacitance 25 pF/foot. Cable to be UL CMR listed.

2.14.3 Plenum Rated Multi-pair Audio Cable (As Required)

Audio cable to be multi-pair individually shielded, CL rated; 22AWG stranded; each pair to be individually jacketed and numerically identified; capacitance 25 pf/foot. Cable to be UL CMP listed.

2.14.4 Plenum Rated Audio Cable (As Required)

Audio cable to be jacketed and shielded pair 22 AWG stranded; capacitance 25 pF/foot. Cable to be UL CMP listed.

2.14.5 Video Baseband Cable (As Required)

Precision digital miniature 75 ohm coaxial cable for rack or console video interconnections under forty feet and BNC longitudinal Time Code

connections. Use red, green, blue and orange insulation colors to code RGBS circuits respectively. Cable to be UL CMR listed.

SUBMIT TERMINATED SAMPLES FOR APPROVAL.

2.14.6 Plenum Rated Video Baseband Cable (as Required)

Precision digital miniature 75 Ohm coaxial cable for rack or console video interconnections under forty feet and BNC Longitudinal Time Code connections. Cable to be UL CMP listed.

SUBMIT TERMINATED SAMPLES FOR APPROVAL.

2.14.7 Video Baseband cable (As required)

Precision digital 75 ohm coaxial cable for all runs in excess of forty feet. Use red, green blue and orange insulation colors to code RGBS circuits respectively. Cable to be UL CMR listed.

SUBMIT TERMINATED SAMPLES FOR APPROVAL.

2.14.8 Plenum Rated Video Baseband Cable (As Required)

Precision digital 75 ohm coaxial cable for all runs in excess of forty feet. Cable to be UL CMP listed.

SUBMIT TERMINATED SAMPLES FOR APPROVAL.

2.14.9 YC Video Cable (As Required)

Precision digital miniature 75 ohm coaxial cable for rack or console YC video interconnections under forty feet. Cable to be UL CMR listed.

SUBMIT TERMINATED SAMPLES FOR APPROVAL.

2.14.10 Plenum YC Cable (As Required)

Precision digital miniature 75 ohm coaxial cable for rack or console YC video interconnections under forty feet. Cable to be UL CMP listed.

SUBMIT TERMINATED SAMPLES FOR APPROVAL.

2.14.11 RGBHV Cable (As Required)

Precision digital miniature 75 ohm coaxial cable for rack or console video interconnections under forty feet. Cable to be UL CMR listed.

SUBMIT TERMINATED SAMPLES FOR APPROVAL.

2.14.12 Plenum RGBHV Cable (As Required)

Precision digital miniature 75 ohm coaxial cable for rack or console video interconnections under forty feet. Cable to be UL CMP listed.

SUBMIT TERMINATED SAMPLES FOR APPROVAL.

2.14.13 RGBHV Cable (As Required)

Precision digital miniature 75 ohm coaxial cable for rack or console video

interconnections for all runs in excess of forty feet. Cable to be UL CMR listed.

SUBMIT TERMINATED SAMPLES FOR APPROVAL.

2.14.14 Plenum RGBHV Cable (As Required)

Precision digital miniature 75 ohm coaxial cable for rack or console video interconnections for all runs in excess of forty feet. Cable to be UL CMP listed.

SUBMIT TERMINATED SAMPLES FOR APPROVAL.

2.14.15 Control Cable (As Required)

Ethernet control protocol cable with a Siamese Category 6 cable. Cable to be UL CMR listed.

2.14.16 Plenum Control Cable (As Required)

Ethernet control protocol cable with a Siamese Category 6 cable. Cable to be UL CMP listed.

2.14.17 Plenum Category Transmission able (As Required)

ANSI/EIA/TIA 568B.2 Category 6 enhanced performance, consisting of four, 23 AWG solid twisted cable to be UL CMP listed.

2.14.18 Wireless Microphone Antenna Cable (As Required)

50 ohm RG-58 type cable. Cable to be UL CMR listed.

SUBMIT TERMINATED SAMPLES FOR APPROVAL.

2.14.19 HDMI Cable (As Required)

A compact audio/video cable designed to transport uncompressed video data and compressed or uncompressed digital audio data from a HDMI compliant source to a compatible monitor, video projector digital television or digital audio device. SUBMIT TERMINATED SAMPLES FOR APPROVAL

2.14.20 Low Impedance Loudspeaker Cable

Configuration: Type CMP - 12 AWG (2mm) (19x25) stranded twisted pair.
Properties: 1.7 ohms / M' with OD = 6.8 mm.

2.14.21 High Impedance Loudspeaker Cable

Configuration: Type CMP - 18 AWG (1 mm), (7x26) stranded pair.
Properties: 6.2 ohms / M' with OD = 4 mm.

2.14.22 Fiber Optics (With Media Converters)

1. Single mode:

   a. Wave length 1310 nm and 1550 nm
   b. Typical Core Diameter: 8.3µm
   c. Attenuation Uniformity: No point discontinuity greater than

0.1dB at either 1310nm or 1550nm.

2. Multi-Mode:

   a. Wave length 1310 nm and 850 nm
   b. Typical Core Diameter: 62.5 nm
   c. Minimum Return Loss @ 850 and at 1310 nm 20 dB.

3. All Fiber optic cables shall be routed and terminated per all applicable TIA/EIA standards.

2.14.23 Acceptable Cable Manufacturers (Substitution shall be by an approved means.)

1. Belden, Inc.
2. Gepco International.
3. Commscope, Inc.
4. West Penn Wire.

2.15 CONNECTORS, PLATES AND PANELS

2.15.1 Furniture Mountable Enclosure for Cables

Furniture mountable cable enclosure with a square bezel. Accommodates up to five single-space Architectural Adapter Plates(AAPs) to allow for convenient access to cable connections, available in brushed aluminum finish or matt black, UL/C-UL listed and CE compliant. Coordinate top cover color prior to ordering. Provide a sample to the conference table or work student station manufacturer for exact cutouts.

Acceptable Manufacturers: (Substitution shall be by an approved means.)

Extron
FSR
Legrand

2.15.2 Table Top Pop-Up Box

Table mount boxes shall open/close by pressing top panel. Input connectors including computer video , video RCA, microphone, computer audio (left and right or stereo) network (modular, touch panel (mini Din) and power outlet with switch as shown on the Contract drawings and Part 1 of this specifications. Coordinate top cover color prior to ordering. Provide a sample to the conference table manufacturer for exact cutouts.

Acceptable Manufacturers: (Substitution shall be by an approved means.)

Extron
FSR
Legrand

2.15.3 Custom Rack Panels

Custom rack panels shall be milled 3/16" thick 6061T 6 aluminum; brushed black hard anodized finish unless otherwise noted. Brush in direction of aluminum grain only with grain running parallel to the long dimension of the panel or box. Surface-mount panels to have beveled or chamfered edges. Install connectors, controls, and other parts and engrave legends as required. Panels typically employ sub-panels for actual device

mounting. Drill and tap panel or sub-panel for connector mounting screws; do not use nuts. Employ natural stainless steel or black oxide fasteners to match appearance. Some connectors may require milling the backside of the panel to reduce panel thickness at the connector. Unless otherwise noted, engraving on panels shall be 0.125" block.

2.15.4 Colors and Engraving

Colors and engraving of the custom wall plates shall follow interior design schedules. Materials shall be brushed aluminum, brushed in the direction of aluminum grain. Plates to be beveled or chamfered edges. Install connectors, controls and engrave legends, as shown on the Contract Drawings. Some connectors may require milling the backside of the panel to reduce panel thickness at the connector.

2.16 MISCELLANEOUS

2.16.1 Teaching Stations (Portable Furniture)

Verify size and color with the COR and Architect prior to ordering.

2.16.2 Equipment Rack Assemblies

Free standing equipment rack assembly, 24 inches wide, 24 inches deep with 42U, 19 inch wide and painted non-gloss black. Provide with front and rear-mounting rails, fans for ventilation, PDU and equipment shelves as required. Fill unused mounting spaces with vent panels or blank panels painted non-gloss black. Verify vent panel requirements to ensure in-rack temperatures of less than 100 degrees.

Acceptable Manufacturers: (Substitution shall be by an approved means.)

To Be Determined

2.16.3 Millwork Racks Inside Credenza

Millwork racks shall be 14U with configuration as shown on the drawings, 19" wide and painted non-gloss black. Provide with front and rear mounting rails, fans for ventilation, PDU and equipment shelves as required. Fill unused mounting spaces with vent panels or blank panels painted non-gloss black. Verify vent panel requirements to ensure in-rack temperatures of less than 100 degrees.

2.16.4 Freestanding Racks Outside Credenza

Racks shall be 14U, 19" wide and painted non-gloss black. Provide with front and rear mounting rails, fans for ventilation, front glass locking door, rear locking door, PDU and equipment shelves as required. Fill unused mounting spaces with vent panels or blank panels painted non-gloss black. Verify vent panel requirements to ensure in-rack temperatures of less than 100 degrees.

Acceptable Manufacturers: (Substitution shall be by an approved means.)

To Be Determined

2.16.5 Loose Inventory

Provide the following equipment as a loose inventory item

3. Two AV Carts
4. Universal Scan Converters (Quantity -2)
5. Universal Scaler (Quantity - 2)

14. Misc Interface cables - 6 feet each

    a. RGBHV (VGA DB-9) to 5 BNC (Quantity - 10)
    b. S-video to 2 BNC (Quantity - 10)
    c. Mini Stereo Audio to Male XLR (Quantity - 10)
    d. Mini Stereo Audio to Female XLR (Quantity - 10)
    e. RCA Stereo Audio to Male XLR (Quantity - 10)
    f. RCA Stereo Audio to Female XLR (Quantity - 10)
    g. BNC to Coaxial (Quantity - 5)
    h. Digital Audio Optical Cables (Quantity -8)
    i. Digital Audio Coaxial Cables (Quantity - 8)

2.16.6 Rack Shelves

Provide shelves for the following including Government furnished computers in the EIA racks:

1. Video Equipment
2. Control Equipment
3. Source Equipment
4. Miscellaneous
5. Programming
6. Interface

2.16.7 Uninterruptible Power Supply (UPS)

Provide one UPS each for DSP control computer, amplifier control computer, and scheduling computer. UPS shall be provided to maintain power to computer. Ups to be rack mountable (provide rear structural support) equipped with receptacle plug for electrical service input and include internal batteries. The UPS power output receptacles shall be isolated ground type. The UPS shall be rated at 2.2kW with a run time of 11 minutes at full load and 60 minutes at half load.

Acceptable Manufacturers: (Substitution shall be by an approved means.)

APC
Tripp Lite
Middle Atlantic

2.16.8 Balance/ Unbalanced Conversion

Provide stick on type buffer amplifier. Stereo unbalanced and balanced audio conversion with a cabinet mount and power supply.

Acceptable Manufacturers: (Substitution shall be by an approved means.)

Extron
Kramer
Radio Design Labs

2.16.9 Stereo to Mono Audio Conversion

Provide stick on type stereo to mono audio conversion with a cabinet mount

and power supply.

Acceptable Manufacturers: (Substitution shall be by an approved means.)

Extron
Kramer
Radio Design Labs

2.16.10 Rack Blowers

Dual squirrel cage rack ventilators with variable speed motors and front panel serviceable intake filter unit. Provide with optional airflow controller and temperature sensor. Rack-mount all blowers in the bottom of selected equipment rack. Mount temperature sensor in top of equipment rack. Mount on rear rails where possible.

Acceptable Manufacturers: (Substitution shall be by an approved means.)

Middle Atlantic
Winsted

2.16.11 Fuses

Provide 100% spares of each type.

2.16.12 Line Transformers

All transformers shall be shielded, have a + 1 dB frequency response of 20 Hz to 20 kHz and be rated for a maximum input level of at least 6.0 Volts 2 40 kHz and higher frequencies, use line transformers as necessary to balance the signals.

1. Impedance 150 ohm: 150 ohm
2. Impedance 600 ohm: 600 ohm
3. Impedance 600 ohm: 15K ohm
4. Impedance 15 K ohm: 15K ohm

2.17 TERMINATIONS

2.17.1 Cable Markers

Permanent labels corresponding to the Contract Drawings affixed to all cables.

2.17.2 Cable Tether Locking Device

Provide a cable tether locking device for installation on cable connections to secure cable adapters to the host cable for use with pigtail-style adapters, adjusts to fit a variety of pigtail lengths and cable types,14 inch white nylon coated stainless steel wire construction, complete with crimp style metal sleeves and heat shrink tubing.

2.18 FABRICATION

Complete all custom fabrication work at the shop.

Verify the depth of each rack prior to assembly to ensure that mounted equipment will fit completely inside with the rear door closed. Install all rack-mounted equipment and test the systems before delivery of

equipment racks to the project site.

2.19 SOURCE QUALITY CONTROL

After assembly of rack systems in the shop, measure and record the DC resistance between the racks ground bus bar and the chassis of all rack-mounted components. Also measure and record the DC resistance between the rack ground bus bar and the source signal ground bus for all components.

Use a sine-wave signal generator, dual trace oscilloscope and dBm meter to measure and document the level, which produces clipping at each component input used in the system.

Using a + 4 dBm sine-wave input, set controls of each component to produce a +4 dBm sine wave output. Under these operating conditions (unity gain); note the presence of any waveform distortion, interference or oscillations. Take corrective action to eliminate the anomalies and document the corrective measures.

2.20 VERIFICATION OF PERFORMANCE

In the shop, photograph the interconnect wiring within racks including patch panels and grounding to show the quality of workmanship and compliance with the specified grounding procedures.

Submit the test reports and photographs to the Engineer before delivery of racks to protect the site.

PART 3 EXECUTION

3.1 EXAMINATION

Examine the areas to receive the work and the conditions under which the work would be performed. Identify conditions detrimental to proper and timely completion of the work. Do not proceed until unsatisfactory conditions have been corrected. If substrate preparation is the responsibility of another installer, notify Architect of unsatisfactory preparation before proceeding.

3.2 GENERAL

A successful professional audiovisual system installation depends on the clear definition and coordination of processes, resources, and responsibilities of the design and installation project teams. A properly documented audiovisual system provides the information necessary to understand and implement the system goals and project requirements in a logical and efficient manner. The documentation should complement and coordinate related architectural, engineering, and construction documentation. This coordination and installation process shall be performed in accordance with ANSI/ INFOCOMM 2M: 20010.

1. Installation shall include the following: the delivery to the installation site; unloading; setting in place; fastening to walls, floors, ceilings, counters or other structures where required; interconnecting the wiring of the system components, equipment alignment and adjustment; and all other work, whether or not expressly required herein, that is necessary to result in complete and fully operational systems.

2. Prior to ordering equipment, the contractor shall coordinate the frequencies of all wireless devices in order to prevent unwanted interaction between devices and rooms. This includes, but is not limited to, wireless microphones, assisted listening system devices, wireless control panels, etc.
3. All accessories, including rack-mounting hardware, power supplies, etc., shall be obtained from the original equipment manufacturer. Unless otherwise noted or specified, third-party accessories shall not be used.
4. All installation practices shall be in accordance with, but not limited to, these specifications and drawings. Installation shall be performed in accordance with the applicable standards, requirements and recommendations of national and local authorities having jurisdiction.
5. If, in the opinion of the contractor, an installation practice is desired or required that is contrary to these specifications or drawings, a written request for modification shall be made to the consultant. Modifications shall not commence without written approval from the consultant. Every effort will be made to respond to all written requests in a timely manner so as to not delay the installation or completion of the project.
6. During the installation and up to the date of final acceptance, the contractor shall be under obligation to protect his finished and unfinished work against damage and loss. In the event of such damage or loss, the damage shall be replaced or repaired at no cost to the owner.

3.3 INSTALLATION

1. Execute all work in accordance with all local and national codes, ordinances and regulations.
2. Mount all equipment to be installed over public areas in a manner adequate to support the equipment loads with a minimum safety factor of five.
3. Firmly and permanently, attach electrical boxes, enclosures, and permanent equipment to the building. Rigidly mounted equipment and devices shall be plumb and square.
4. Choose colors and finishes of all exposed and custom fabricated items and labels to blend in with the surroundings as approved by the Government.
5. Install equipment in accordance with manufacturer's recommendations. Ensure that levels and impedances are properly matched between components. Verify that projector distances and lenses are appropriate for the corresponding screen sizes.
6. Provide shaft locks or security covers on all non-government equipment as directed by the Engineer during acceptance testing and equalization.
7. Wireless Systems:

    a. Ensure that all wireless systems operate on different frequencies from each other and from any other transmitters in the area.
    b. Coordinate frequency selection for compatibility with local RF environment.

8. Grounding and Shielding

All grounding shall be performed in accordance with TIA-607.

    a. Mount and enclose all electrical and electronic equipment in metal enclosures or equipment racks.
    b. Mount equipment racks in a manner which provides electrical isolation from the building structure and electrical raceways.

Use flexible conduits and PVC fittings to provide insulated connections between equipment racks and the building electrical raceways.

c. Ground the chassis of all rack mounted components in accordance with the Contract Drawings and verify a D.C. resistance between each chassis and the rack ground bus of no more than 0.01 ohms.

9. Ground the shields of interconnecting wires on one end only in accordance with the Contract Drawings and treat the unused opposite ends as described below under "Wiring Practices." shield drain wires shall be insulated in all instances by use of appropriately sized black heat shrink tubing equal to Alpha FIT-221 series.

10. Wiring Practices

a. Where specific instructions are not give, perform all wiring in strict adherence to stand broadcast and sound engineering practices as described in the referenced "Broadcast Audio Equipment for AM, FM Television and in Sound System Engineering text references listed in the reference section of this specification.

b. Group all wiring into the following classifications by power level or signal type:

1) Microphone Level: Less than 20 dBm
2) Line Level Audio and DC Control Circuits: 20 dBm to +30 dBm.
3) Speaker Level: greater than +30dBm
4) Video RF Circuits
5) AC Power Circuits

c. Maintain a minimum six-inch separation between wiring of different level classifications wherever possible. Otherwise, cross them perpendicular to each other. Where wiring of different level classifications share a common enclosure or junction box, provide metallic isolation barriers to completely electrically separate wiring groups. As a general practice, all power cables, control cables and high-level cables shall be run on the left side of an equipment rack as viewed from the rear. All other cables shall be run on the right side of an equipment rack, as viewed from the rear.

d. Neatly harness wires together within racks by power level classification sing horizontal and vertical wiring supports as required. Rigidly support all wires within twelve inches of connection points.

e. Observe consistent polarity throughout the audio systems as follows:

XLR Connectors:
Positive = Pin 2
Negative = Pin 3
Common = Pin 1

TRS Connectors:
Positive = Tip
Negative = Ring
Common = Sleeve

f. Use only balanced differential inputs throughout all sound systems unless noted otherwise. Use approved transformers to convert all unbalanced inputs to balanced inputs. Output signals may be unbalanced if inputs of subsequent devices are with the same

rack. Otherwise use approved transformers to balance the outputs.

g. Exercise care in wiring to avoid damaging the cables and equipment. Use grommets around cut-outs and knock-outs where conduit or chase nipples are not installed.

h. Cut off unused wire ends approximately one-half inch (1/2") past the wire jacket. Fold them back over the jacket, and secure in place with heat shrink tubing.

i. Make connections using rosin core solder or approved mechanical connectors.

j. Do not splice cables of any signal category under any circumstances without prior approval of the engineer.

k. All cables shall originate and terminate at active or passive devices; cables shall not be spliced. Where several devices are in close proximity, utilize approved housing to housing connectors and adapters.

l. All cables terminated in a connection plate mounted in an enclosure shall be dressed to allow removal from the enclosure and sufficient cable length for service or re-termination. Plate shall sit on the floor or freely swing clear.

m. All coaxial video or RF connections to plates or panels in boxes, pedestals, racks or any similar location with limited clearance, that would prevent that the associated cable manufacturer's minimum bend radius from being strictly observed shall be provided with the appropriate right angle or similar adapter as appropriate.

n. All cable installed under this specification which is to be terminated by others for "future" or GFE in racks, shall be provided with ten (10) feet of slack when dressed to the location of the future or GFE equipment. All cable installed under this specification which is to be terminated by others , shall be provided with twenty (20) feet of slack when ending in a rack enclosure. All cable provided under this specification, to be terminated by others shall be provided with fifty(50) when terminating in an equipment room without a clear point fo demarcation, or in a group of racks where the destination is not known.

o. All coaxial connectors shall be crimped with the appropriate hexagonal die crimp tool correct for the combination of cable and connector. Non- ratcheting type crimping tools are not Representative; the presence of such tools on the job site shall be interpreted as evidence of mechanical connections incorrectly made and provide sufficient grounds for rejection of all mechanical connections in the system.

p. Cable installation in conduit and ductbanks

1) Pull mandrel one size smaller than the conduit through the entire length of all underground conduits
2) Cable pulling lubrication shall be utilized when pulling cable.
3) A dynamometer is to be placed between the cable puller and the pull line to monitor pulling tension. The manufacturers pulling tension maximum range shall not be exceeded.
4) Pulling grips suitable for use with fiber cables shall be applied to the ends of the cable . Consult cable manufacturer to determine appropriate pulling grip and method of attachment. Break away or fuse links shall be used at the pulling grip. Ensure that the correct fuse pin is installed in the fuse link.
5) Cable caps (heat shrinking type) shall be used to seal

the ends of the cable to protect the cable ends prior to terminating.

6) Use of cable blocks shall facilitate the bending of cable. For bends between 5 degrees and 45 degrees, a 45 degree cable block shall be utilized. For 45 degree to 90 degree bends, utilize a 90 degree cable block.
7) The bend radius for all cable shall conform to the manufacturer's specifications.
8) Provide spare cables between terminal cabinets equal to 10% of the installed cables or a minimum of 2 cables of each type cable installed. Provide spare cables between terminal cabinets and equipment racks/consoles equal to 15% of the installed cables or a minimum of 5 cables of each type cable installed. Label all spare cables as spares with unique identifiers. Do not use any spare cables without prior approval from the Engineer.

11. Labeling

a. Label product in a logical , legible and permanent manner corresponding to the Contract Drawings using wording, format style, color and arrangement of text approved by the Engineer.
b. Label all panels and wall plates using 1/8" engraved lettering. On dark panels and plates, fill engraving with white paint, and on aluminum or stainless steel panels and plates, fill engraving with black paint.
c. Provide engraved plastic labels similar to Lamicoid, squarely and permanently attached, to label patch panels, barrier strips, terminals, transformers, switches, relays and similar devices as well as the front and rear of all signal processing equipment (e.g., PA LIM and EQ). Label all controls on distribution amplifiers mixers, etc as to the function of each.
d. Label push button switches with engraved lettering filled with contrasting color paint.
e. Label all permanent wiring on both ends with approved permanent clip on type or sleeve type markers. Wrap around adhesive labels will not be accepted unless completely covered with clear heat shrink tubing.

12. Connection Plate Receptacles

Note: All connectors on wall plates or in other exposed locations are to be recessed.

a. Audio (microphone) - XLR type.
b. Audio (line level) - 1/4 inch diameter tip/ring/sleeve type or as required by the intercom system. Jack shall be insulated from panel type.
c. Audio (loudspeaker level) - Neutrik "Speak-On" Type.
d. Intercom - ¼ inch diameter tip/ring/sleeve type or as required by the intercom system. Jack shall be insulated from panel type.
e. Video - BNC type.
f. DVI - DVI-I jack isolated from panel type with hex nuts.
g. HDMI - HDMI jack isolated from the panel.
h. RF - "F" type. Receptacles shall be insulated from panel type.

3.4 FIELD QUALITY CONTROL

3.4.1 General Testing

Maintain a competent supervisor and supporting technical personnel acceptable to the Government during the entire installation. Change of supervisor during the project shall not be acceptable without prior written approval from the Government.

Before connecting any equipment to electrical power outlets, measure and record the AC voltages between hot, neutral and ground an d verify correct outlet polarity. Verify test and document correct and safe function of isolated ground power systems.

Determine the best sequence of energizing systems to minimize the risk of damage.

After successfully energizing the systems, make preliminary adjustments and document the settings of all controls, parameters of corrective networks, voltages at key interconnection points, gains and losses as applicable. Replicate the unity gain tests performed at the shop and document the absence of any waveform distortion interference signals, or oscillations.

Upon completion of the system installation, it shall be the responsibility of the Contractor to perform the necessary adjustments and balancing of all signals, amplifier gain, and other level controls to ensure proper system operation. The system shall be physically inspected by the Government to assure that all equipment is installed in a neat and workmanlike manner as called out for by the plans and specifications.

Verify performance parameters of the individual systems following established professional procedures. In addition to those specified herein. Document all acceptance testing, calibration and correction procedures described herein, being careful to include the following information:

1. Performance date of the given procedure.
2. Condition of performance of procedure.
3. Type of procedure and description
4. Parameters measured and their values, including values measured prior to calibration or correction, as applicable.
5. Parameters associated with calibration or corrective networks, components or devices.
6. The names of personnel conducting the procedure.
7. The equipment used to conduct the procedure

3.4.2 Audio Testing

Before connecting loudspeaker lines to power amplifiers, measure and record the impedance curves of all lies using a sweep test or impedance ridge at least six frequencies from 125 HZ through 8,000 Hz.

Test all low level audio cables an connections for continuity and ground faults and correct polarity.

Apply a sine wave sweep signal to each loudspeaker system, sweeping from 50 Hz to 5000 Hz at a sound pressure level that is 10 dB below the loudspeaker's rated electrical input power. Listen for rattles or objectionable noise and correct if apparent.

Check for proper polarity of loudspeakers by applying music program or pink noise to each system and walking through the transition areas of coverage from one loudspeaker to the next. Transition should be smooth with no apparent shifting of source back and forth from one loudspeaker to the next.

Achieve uniform distribution of sound from each loudspeaker system after all interior furnishings are in place. Drive each system with one full octave of noise centered at 4000 Hz at a level of 85 to 90 dB. Use a sound level meter that meets ANSI ST4 1971 Type 2 standards set for slow meter damping and "A" weighting. Take all readings at seated ear height Adjust speaker angles as necessary to achieve a +3 dB over entire seating area. Provide plan of achieved sound distribution from each system, plotted with a 4 kHz pink noise level as measured on a 10 foot square grid pattern. The process of equalizing and testing the sound systems may necessitate moving and adjusting certain component parts, e.g. loudspeakers. This shall be done without claim for additional payment. The sound system performance shall be performed in accordance with ANSI/ INFOCOMM 1M: 20009.

Provide a list showing all build out, termination, and pad resistor calculations. List to include measured line and source impedances used in calculations and results of tests after installation , and impedance of all inputs to equipment brought upon patch bay. Impedances in ohms are to be within +10% of design value. Levels in dB are to be within +1dB of design value.

Test all low level audio cables and connections for continuity and ground faults and correct polarity

Using a sine wave signal source, send a 1 kHz sine wave signal out of the mixing console at a level just below clipping as observed on an oscilloscope. Increase the input and then the output gain in turn on each device downstream in the signal path until the oscilloscope indicates the level in and out of each device is just below clipping. Be sure that the clipping threshold of the input attenuator, if the device under test has one, is found before adjusting its output attenuator. If the input attenuator on any device lacks sufficient padding to prevent input clipping, insert the minimum value pad required to prevent input clipping. Adjust the input attenuator on all amplifiers by first disconnecting any loudspeaker.

Upon completion of initial tests and adjustments, submit written results of tests to Engineer. In addition, submit written notification that the installation has been completed in accordance with the requirements of the Contract Documents, and is ready for equalization and inspection by representatives of the Engineer and the Government.

3.4.3 Video Testing

Test all video projectors and displays for proper image geometry. Calibrate all video images for brightness, contrast ,color, tint and sharpness according to the parameters described in Digital Video Essentials from Joe Kane Productions.

3.4.4 Category 6 Shielded Cable Testing

Perform cable inspection, verification, and performance tests in accordance with TIA-568-C.1, TIA-568-C.2 and TIA-568-C.3. Test equipment shall conform

to TIA-1152.

3.4.5 Control System User Interface

Control-system user interfaces pages shall be designed for this project exclusively. While there are a great number of design approaches to designing the user interface, the following guidelines shall be adhered to:

1. All panels are to have the time and date as icons in the same position on every page.
2. All panels are to have a title, indicating the piece of equipment and/or functionality being controlled.
3. Each individual room type shall be given the same user-interface design and layout throughout the entire campus to the greatest extent practicable.
4. User interface design shall, to the greatest extent possible and taking into account the variations in system functionality from room type to room type, maintain continuity throughout the campus.
5. Final programming shall include the capability to remotely control all functions of the audio system. Individual device controls shall provide full manufacturer's functionality.
6. Devices similar in nature shall be programmed to operate with a common format.
7. No individual component shall be programmed to function atypically.
8. Whenever the same button appears on more than one page, it will be in the same position on each page.
9. Functions used during a general presentation shall be accessible with a minimal amount of button presses/page flips.
10. Where feasible, multi-level access to controls should be implemented.
11. During performance testing, all equipment shall be operated under standard conditions as recommended by the manufacturer.

3.4.6 Final Testing

Upon completion of initial tests and adjustments, submit written results of tests to the Engineer. In addition, submit written notification that the installation has been completed in accordance with the requirements of the Contract Documents, and is ready for final inspection by representatives of the Engineer and US Government.

System acceptance tests will not be performed until the contractor's system checkout has been completed and the test results have been reviewed. The system acceptance tests will be supervised by the consultant and will consist of the following:

1. A physical inventory will be taken of all on-site equipment and will be compared to equipment lists in the contract documents.
2. The operation of all system equipment shall be demonstrated by the contractor.
3. Both subjective and objective tests will be required by the consultant in order to determine compliance with the specifications. The contractor shall be responsible for providing test equipment for these tests.
4. All final, "as-built" drawings, run sheets, manuals and other required documents, shall be on hand. Two complete sets of these documents shall be delivered to the owner at this time. (One complete set shall have been delivered to the consultant prior to the scheduling of acceptance of acceptance tests).
5. In the event that further adjustment is required or defective equipment

must be repaired or replaced, tests may be suspended or continued at the option of the consultant.

6. Any charge for additional time incurred by the consultant required overseeing the system tests, due to improper system installation or previous failed systems, shall be the responsibility of, and charged directly to, the contractor.

3.5 INSPECTION

Provide a statement of completion certifying that the system is installed and is ready for acceptance testing and equalization to the Engineer.

Schedule a time for the Engineer to perform system acceptance testing and equalization with at least 14 days advance notice.

Furnish a technician who is familiar with the system to assist the Consultant during the acceptance testing and equalization for the duration of time it takes to complete the adjustments. A minimum 12 hours should be allotted to complete the adjustments.

Each cable shall be inspected for proper termination.

Under the direction of the Engineer, adjust the signal levels at the loudspeaker aiming as required to achieve the uniform sound distribution within a tolerance of +2dB.

System flatness test shall employ an approved sweep transmitter receive pair. Sweep measurements shall be taken at the termination of every cable termination in the system. Where possible, record sweep results by photographic means.

Record the final settings on all equipment and submit with contract closeout.

Record final settings on all equipment and submit with contract closeout documents.

Heat shrinking tubing shall be shrunk to cover the external connection to amplifier/passive components only after system alignment and acceptance has been completed.

Upon completion of initial tests and adjustments, submit written report of tests to the Government along with all documents, diagrams, and record drawings required herein.

If the system does not meet criteria or if additional trips are required to the job site for testing equalization, the Contractor shall reimburse the government for all expenses and professional time encountered by the Engineer.

3.6 DEMONSTRATION

Designate technicians who are familiar with and qualified to operate the systems for instruction to the Government. Provide instruction of Government designated personnel in the design features and proper operation of the systems. Provide a minimum of 8 hours for on-site instruction and videotape the training sessions. Make any Government requested changes to the control system programming during this time.

Upon completion of the work , the Government may elect to verify test data as part of the acceptance procedure. Provide personnel and equipment, at the convenience of the Government , to reasonably demonstrate system performance and to assist with such tests without additional cost to the Government.

After final acceptance, the Government reserves the right to direct changes to the control system software for a period of three months. Such changes shall be made without additional cost to the Employer.

Password Handover: The specialist subcontractor shall hand over all passwords and controls to the COR prior to Acceptance.

3.7 ADJUSTMENTS

Upon completion of the work, repair surfaces that has been permanently stained , marred or otherwise damaged. Replace work which is damaged and cannot be adequately cleaned as directed.

Government reserves the right to ask for source code programming changes to the control system within 3 months of acceptance of the system. The contractor shall make those changes at no extra cost to the Government.

3.8 CLEANING

Remove all unnecessary tools and equipment, unused materials, packing materials , and debris from each area where the work has been completed unless designated for storage.

Clean all areas around system equipment and be sure that the inside of each equipment rack is free of wire stripping and other debris.

3.9 PROTECTION

Protect the work during the construction period so that it will be without any indication of use or damage at the time of acceptance.

3.10 SPARES

The Contractor shall provide manufacturer's recommended spare parts list. 10% spares for every item (except cable) shall be provided.

Supply one (1) reel of each type of cable to the Owner for their use.

3.11 MAINTENANCE

3.11.1 Operation and Maintenance Manuals

Commercial off the shelf manuals shall be furnished for operation, installation, configuration and maintenance of products provided as a part of the Audio Visual System.

3.11.2 Record Documentation

Provide as-built drawings showing the complete system components as designed as well as the interconnections between components and systems. All installed components shall be provided in form of riser diagram.

-- End of Section --

THIS PAGE HAS BEEN INTENTIONALLY LEFT BLANK

SECTION 27 54 00.00 20

COMMUNITY ANTENNA TELEVISION (CATV) SYSTEMS
04/06

PART 1 GENERAL

1.1 REFERENCES

The publications listed below form a part of this specification to the extent referenced. The publications are referred to within the text by the basic designation only.

INSTITUTE OF ELECTRICAL AND ELECTRONICS ENGINEERS (IEEE)

IEEE C2	(2012; Errata 2012; INT 1-4 2012; INT 5-7 2013) National Electrical Safety Code

NATIONAL CABLE AND TELECOMMUNICATIONS ASSOCIATION (NCTA)

NCTA RP	(2003) NCTA Recommended Practices for Measurements on Cable Television Systems

NATIONAL FIRE PROTECTION ASSOCIATION (NFPA)

NFPA 70	(2014; AMD 1 2013; Errata 1 2013; AMD 2 2013; Errata 2 2013; AMD 3 2014; Errata 3-4 2014; AMD 4-6 2014) National Electrical Code

U.S. NATIONAL ARCHIVES AND RECORDS ADMINISTRATION (NARA)

47 CFR 76.605	Technical Standards

UNDERWRITERS LABORATORIES (UL)

UL 1581	(2001; Reprint Aug 2013) Electrical Wires, Cables, and Flexible Cords
UL 1666	(2007; Reprint Jun 2012) Test for Flame Propagation Height of Electrical and Optical-Fiber Cables Installed Vertically in Shafts
UL 969	(1995; Reprint Nov 2008) Standard for Marking and Labeling Systems

1.2 RELATED REQUIREMENTS

Section 26 00 00.00 20 BASIC ELECTRICAL MATERIALS AND METHODS, applies to this section with the additions and modifications specified herein.

1.3 DEFINITIONS

1.3.1 CATV

Community antenna television (CATV) system, commonly referred to as cable television, is a network of cables, headend, electronic and passive

components that process and amplify television (TV) signals for distribution from the headend equipment to the individual television outlets.

1.3.2 Headend

The connection point between CATV system equipment and equipment provided by the local CATV company.

1.3.3 Distribution System

Distribution system transports and delivers adequate signals to each receiver. Provides distortion-free signal to TV sets by isolating each receiver from the system and by providing proper amount of signal to each set.

1.3.4 Cable

Trunk cables are low-loss cables used to transport the desired signal from the headend equipment to the communications closet in the area to be served. These cables are used to transport signal from the communications closet into close proximity to a number of user locations in excess of 200 feet from the communications closet. Drop cables are used to transport the desired signal used from the communications closet or headend equipment to the wall outlet.

1.4 SYSTEM DESCRIPTION

1.4.1 Headend

Contractor shall provide interior equipment up to headend located at the interior CATV backboard.

1.4.2 Distribution System

Distribution system shall be star topology with each outlet connected to a communications closet with a feeder cable or a drop cable and each communications closet connected to the headend equipment with a trunk cable.

1.4.3 Cable

Provide trunk cables to transport the desired signal from the headend equipment to the communications closet in the area to be served. Provide drop cables to transport the desired signal from the communications closet or headend equipment to the outlet.

1.4.4 System Components

System shall provide high quality TV signals to all outlets with a return path for interactive television and cable modem access. Provide any combination of items specified herein to achieve required performance, subject to approvals, limitations, acceptance test, and other requirements specified herein. A cable provider shall provide system to include amplifiers, splitters, combiners, line taps, cables, outlets, tilt compensators and all other parts, components, and equipment necessary to provide a complete and usable system.

1.4.4.1 System Bandwidth

a. Downstream: 50-750 MHz minimum.

b. Upstream 5-40 MHz minimum.

1.4.5 System Performance

System shall be in compliance with 47 CFR 76.605.

1.4.5.1 Receiver Termination Signal Level

Each termination for a TV receiver must have a minimum signal level of 0 decibel millivolts (dBmV) (1000 microvolts) at 55 MHz and of 0 dBmV (1000 microvolts) at 750 MHz and a maximum signal of 15 dBmV or a level not to overload the receiver for the entire system bandwidth.

1.4.5.2 Distribution System

a. Modulation distortion at power frequencies: 4 percent or less hum distortion;

b. Composite third order distortion for:

(1) CW carriers: 53 dB.

(2) Modulated carriers: 59 dB.

c. Subscriber terminal isolation: 18 dB or greater.

d. Carrier to second order beat ratio: 60 dB.

e. Amplitude characteristic shall be within a range of plus or minus 2 decibels from 0.75 MHz to 5.0 MHz above the lower boundary frequency of the cable television channel, referenced to the average of the highest and lowest amplitudes within these frequency boundaries.

f. Visual, aural carrier level, 24-hour variation: 47 CFR 76.605, subpart (a), rules (4), (5), and (6).

g. Frequency determination: 47 CFR 76.605, subpart (a), rules (1),(2), and (3).

1.4.5.3 All New System Tolerance

The system shall not show a serious loss of carrier to noise when the system levels are lowered 3 dB below normal or a significant distortion when the levels are increased 3 dB above normal, as observed on a TV set located at the far end extremities of the system.

1.5 SUBMITTALS

Government approval is required for submittals with a "G" designation; submittals not having a "G" designation are for Contractor Quality Control approval. The following shall be submitted in accordance with Section 01 33 00 SUBMITTAL PROCEDURES:

SD-02 Shop Drawings

CATV system wiring diagrams and installation details; G

CATV system components; G

SD-03 Product Data

Cables, including trunk, feeder, and drop; G

Outlets; G

Connectors; G

Grounding block; G

Submittals for each manufactured item shall be the current manufacturer's descriptive literature of catalog products, equipment drawings, diagrams, performance and characteristics curves, and catalog cuts.

SD-06 Test Reports

System pretest

Acceptance tests

SD-08 Manufacturer's Instructions

Connector Installation

1.6 QUALITY ASSURANCE

1.6.1 Wiring Diagrams and Installation Details

Illustrate how each item of equipment functions in the system and include an overall system schematic indicating the relationship of CATV units on one diagram. Drawings shall include wiring diagrams and installation details of equipment indicating proposed locations, layout and arrangements, and other items that must be shown to ensure coordinated installation.1.6.2 Connector Installation

Provide manufacturer's instructions for installing connectors.

PART 2 PRODUCTS

2.1 ELECTRONIC EQUIPMENT

Electronic components of similar type shall be produced and designed by the same manufacturer as major components of the equipment and shall have the manufacturer's name and model permanently attached. Equipment shall function properly as a complete integrated system. Equipment shall be shielded. The system shall be designed to operate within 5 to 1000 MHz bandwidth using 1000 MHz passive devices and a minimum of 750 MHz active devices.

2.2 DISTRIBUTION EQUIPMENT

2.2.1 Cables and Associated Hardware

Cabling shall be UL listed for the application and shall comply with

NFPA 70. Provide a labeling system for cabling as required by UL 969. Cabling manufactured more than 12 months prior to date of installation shall not be used.

2.2.1.1 Trunk Cable

UL 1666. Provide trunk cable with an NFPA 70 rating of CATVR.

a. Provide RG-11 coaxial cable with the following characteristics:

(1) #14 AWG copper-clad steel center conductor.

(2) Gas injected foam polyethylene dielectric with nominal 0.28 inches outer diameter.

(3) Bonded foil inner-shield and 60 percent aluminum braid or quad shield.

(4) 75 ohms impedance.

(5) 82 to 85 percent nominal velocity of propagation.

(6) Black PVC jacket

(7) Maximum attenuation characteristics:

MHz	DB/100 ft
5	0.38
55	0.96
300	2.25
350	2.42
450	2.86
500	2.90
600	3.18
750	3.65
1000	4.35

b. Provide 625 Series cable with an NFPA 70 rating of CATVR and the following characteristics:

(1) Copper-clad aluminum center conductor

(2) Seamless aluminum tubing shield

(3) Expanded polyethylene dielectric

(4) 75 ohms impedance

(5) Nominal diameter over outer conductor: 0.625 inches.

(6) Maximum attenuation at 20 degrees C and 1000 MHz: 2.07 dB/100 feet

(7) Black medium density polyethylene jacket

(8) Nominal 87 percent velocity of propagation

2.2.1.2 Feeder Cable

UL 1581, provide RG-11 coaxial trunk cable with an NFPA 70 rating of CATV and the following characteristics:

a. #14 AWG copper-clad steel center conductor.

b. Gas injected foam polyethylene dielectric with.28 inches nominal outer diameter.

c. Bonded foil inner-shield and a minimum of 60 percent aluminum braid or quad shield.

d. 75 ohms impedance.

e. 81 to 84 percent nominal velocity of propagation.

f. Black PVC jacket.

g. Maximum attenuation characteristics:

CATV	
MHz	DB/100 ft
50	.95
100	1.3
200	1.9
400	2.7
700	3.9
1000	4.8

2.2.1.3 Drop Cable

UL 1581. Provide RG 6 coaxial cable with an NFPA 70 rating of CATV and with the following characteristics:

a. No. 18 AWG copper-clad steel center conductor.

b. Bonded foil inner-shield and 90 percent aluminum braid.

c. Characteristic impedance of 75 ohms.

d. Gas injected foam polyethylene dielectric

e. Nominal capacitance, conductor to shield, of 16.2 pf per 100 ft .

f. Maximum operating voltage of 350 V RMS.

g. Maximum attenuation:

CATV	
MHz	DB/100 ft
10	0.81
50	1.46
100	2.05
200	2.83
400	4.0
500	4.53
700	6.0
1000	7.3

h. Black polyvinyl chloride (PVC) jacket.

i. 100 percent sweep testing from 5 MHz to a minimum of 1000 MHz.

2.2.2 Outlets

Provide flush mounted, 75-ohm, F-type connector outlets rated from 5 to 1000 MHz in standard electrical outlet boxes with isolation barrier.

2.2.3 Connectors

Provide one piece connectors. Trunk and feeder cable connectors shall be pin type. Drop cable connectors shall be feed thru type.

2.3 GROUNDING AND BONDING

Provide ground rods and connections in accordance with Section 26 20 00 INTERIOR DISTRIBUTION SYSTEM.

2.3.1 Grounding Block

Provide corrosion-resistant grounding block suitable for indoor installation.

2.4 BACKBOARDS

Provide void-free, fire rated interior grade plywood, 3/4 inch thick, 4 by 8 feet. Backboards shall be painted with a gray, nonconductive fire-resistant overcoat. Do not cover the fire stamp on the backboard.

PART 3 EXECUTION

3.1 INSTALLATION

3.1.1 Distribution System

Distribution system shall conform to requirements specified herein. Installation shall be in accordance with IEEE C2 and NFPA 70.

3.1.1.1 Raceway

Provide cable installed in raceways such as conduit and cable trays in compliance with NFPA 70. Raceway shall comply with Section 26 20 00, INTERIOR DISTRIBUTION SYSTEM. Provide 3 inch, minimum, PVC from interior headend location to exterior CATV company connection location. Coordinate location and requirements with the local cable television company.

3.1.1.2 Grounding System

Provide the grounding block at the main CATV backboard. Ground this device according to the requirements of IEEE C2 and NFPA 70.

3.1.1.3 Trunk, Feeder, and Drop Cable

Provide cable to grounding blocks, to line taps, and to outlets.

3.2 FIELD QUALITY CONTROL

3.2.1 System Pretest

Upon completing installation of the CATV system, the Contractor shall perform complete pretesting. During the system pretest, Contractor, utilizing the approved spectrum analyzer or signal level meter, shall verify that the system is fully operational and meets all the system performance requirements of the specification. Contractor shall test the signal loss in dBmV at 55, 151, 547, and 750 MHz. The signal levels shall be 0 dBmV (1000 microvolts), minimum. The signal shall not exceed 15 dBmV over the entire system bandwidth. Any deficiencies found shall be corrected and revalidated by follow up testing. Contractor shall measure and record the video and audio carrier levels at each of the frequency levels specified at each of the following points in the system:

a. At each outlet.

3.2.2 Acceptance Tests

Contractor shall notify the Contracting Officer of system readiness 10 days prior to the date of acceptance testing. Contractor shall also coordinate with the local CATV provider and allow them to attend witness tests. CATV system shall be tested in accordance with the approved test plan in the presence of the Contracting Officer's representative to certify acceptable performance. System test shall verify that the total system meets all the requirements of the specification and complies with the specified standards. Contractor shall verify that no signal leakage exists in conformance with NCTA RP and 47 CFR 76.605. System leakage shall also be tested at the headend location with signal applied to system. Deficiencies revealed by the testing shall be corrected and revalidated on the outlets sampled as well as on the outlets not sampled and revalidated by follow-up testing. Contractor shall conduct testing at each of the

following points in the system:

a. At each outlet.

-- End of Section --

THIS PAGE HAS BEEN INTENTIONALLY LEFT BLANK

+

SECTION 28 31 76.00 22

INTERIOR COMBINATION EMERGENCY COMMUNICATIONS SYSTEMS
08/14

PART 1 GENERAL

1.1 RELATED SECTIONS

Section 26 00 00.00 20 BASIC ELECTRICAL MATERIALS AND METHODS, applies to this section, with the additions and modifications specified herein. In addition, refer to the following sections for related work and coordination:

Section 23 00 00 AIR SUPPLY, DISTRIBUTION, VENTILATION, AND EXHAUST SYSTEMS
Section 08 71 00 DOOR HARDWARE
Section 07 84 00 FIRESTOPPING for additional work related to firestopping.

1.2 REFERENCES

The publications listed below form a part of this specification to the extent referenced. The publications are referred to within the text by the basic designation only.

ACOUSTICAL SOCIETY OF AMERICA (ASA)

ASA S3.2	(2009) Method for Measuring the Intelligibility of Speech Over Communication Systems (ASA 85)

FM GLOBAL (FM)

FM APP GUIDE	(updated on-line) Approval Guide http://www.approvalguide.com/

INSTITUTE OF ELECTRICAL AND ELECTRONICS ENGINEERS (IEEE)

IEEE C62.41.1	(2002; R 2008) Guide on the Surges Environment in Low-Voltage (1000 V and Less) AC Power Circuits
IEEE C62.41.2	(2002) Recommended Practice on Characterization of Surges in Low-Voltage (1000 V and Less) AC Power Circuits

INTERNATIONAL ELECTROTECHNICAL COMMISSION (IEC)

IEC 60268-16	(2003) Sound System Equipment - Part 16: Objective Rating Of Speech Intelligibility By Speech Transmission Index; Ed 3.0

INTERNATIONAL ORGANIZATION FOR STANDARDIZATION (ISO)

ISO 7240-16	(2007) Fire Detection And Alarm Systems — Part 16: Sound System Control And

Indicating Equipment

NATIONAL FIRE PROTECTION ASSOCIATION (NFPA)

NFPA 170	(2012) Standard for Fire Safety and Emergency Symbols
NFPA 70	(2014; AMD 1 2013; Errata 1 2013; AMD 2 2013; Errata 2 2013; AMD 3 2014; Errata 3-4 2014; AMD 4-6 2014) National Electrical Code
NFPA 72	(2013) National Fire Alarm and Signaling Code
NFPA 90A	(2015) Standard for the Installation of Air Conditioning and Ventilating Systems

NATIONAL INSTITUTE FOR CERTIFICATION IN ENGINEERING TECHNOLOGIES (NICET)

NICET	Fire Protection Engineering Technology; Fire Alarm Systems

UNDERWRITERS LABORATORIES (UL)

UL 1480	(2003; Reprint Jun 2010) Standard for Speakers for Fire Alarm, Emergency, and Commercial and Professional Use
UL 1971	(2002; Reprint Oct 2008) Signaling Devices for the Hearing Impaired
UL 2017	(2008; Reprint Oct 2009) General-Purpose Signaling Devices and Systems
UL 268	(2009) Smoke Detectors for Fire Alarm Systems
UL 464	(2009) Standard for Audible Signal Appliances
UL 864	(2003; Reprint Feb 2010) Standard for Control Units and Accessories for Fire Alarm Systems
UL Electrical Constructn	(2012) Electrical Construction Equipment Directory
UL Fire Prot Dir	(2012) Fire Protection Equipment Directory

1.3 DEFINITIONS

Wherever indicated in this specification or on the contract drawings, the equipment, devices, and functions shall be defined as follows:

a. COMBINATION EMERGENCY COMMUNICATIONS SYSTEM: NFPA 72 terminology describing a combination fire alarm and mass notification system where the building mass notification system is integrated with the building

fire alarm control unit to form one combined system that performs both functions.

b. COMBINATION EMERGENCY COMMUNICATIONS SYSTEM PANELS (CECP): Combination Emergency Communications System Panels may consist of separate autonomous control unit and fire alarm control unit supplied from the same or different manufacturers, or a single panel supplied by one manufacturer. Where the term "COMBINATION EMERGENCY COMMUNICATIONS SYSTEM PANEL" or "CECP" is utilized the intent is NOT to limit the designer to one manufacturer or a single enclosure. HOWEVER; whether installed as combined or separate panels or provided by one or separate manufacturers, the panels shall be integrated in their controls and performance to meet the requirements of this section and NFPA 72.

c. AUTONOMOUS CONTROL UNIT (ACU): The primary control unit for the building mass notification system portion of the CECP. ACU may be physically separate from, or a integral part, of the FACU

d. FIRE ALARM CONTROL UNIT (FACU): Fire alarm system component portion of the CECP, provided with primary and secondary power sources, which receives signals from initiating devices or other fire alarm control units, and processes these signals to determine part or all of the required fire alarm system output function(s). FACU may be separate from or a portion of the ACU. Where more than one fire alarm control unit is installed in the building, one panel shall be designated as the Master Fire Alarm Control Unit.

e. SUPPLEMENTARY FIRE ALARM CONTROL PANELS: When necessary multiple interconnected fire alarm control units may be utilized to create a networked system consisting of a master fire alarm control unit and one or more supplementary fire alarm control panels capable of peer to peer communications. Networked panels shall be UL Listed as compatible. Interconnecting separate manufacturers' fire alarm panels or fire alarms panels not capable of peer-to-peer communications is prohibited. The term "supplementary fire alarm control panel" does not refer to releasing service fire alarm panels.

f. LOCAL OPERATING CONSOLE (LOC): Equipment used by authorized personnel and emergency responders to make live voice building-wide mass notification system messages

g. SUPPLEMENTARY NOTIFICATION APPLIANCE CIRCUIT(SNAC)and AUXILIARY POWER SUPPLY PANELS: A panel separate from the "combination emergency communications system panel"(s), usually located remote from the main panel(s). SNAC's are utilized to power visual notification appliance circuits and auxiliary power supplies provide supplementary power to devices or functions requiring power in addition to that available from the SLC.

h. MONITOR MODULE: Term utilized to describe a Signaling Line Circuit Interface as defined by NFPA 72.

i. CONTROL MODULE AND RELAY MODULE: Terms utilized to describe an "Emergency Control Function Interface" as defined in NFPA 72.

j. TERMINAL CABINET: A steel cabinet with locking, hinge-mounted door that terminal strips are securely mounted inside. Utilizing tape or glue is not an acceptable means of mounting terminal strips.

k. TEXTUAL AUDIBLE APPLIANCES: Term utilized by NFPA 72 to describe speaker appliances. The term "textual audible appliance" is utilized because the term "speaker" might also refer to a person who is speaking.

1.4 SYSTEM DESCRIPTION

1.4.1 Scope

This work includes completion of design and providing a new, complete, combination emergency communications system as described herein and on the contract drawings for project P1396B.

Fire Alarm Control Unit portion shall be an analog/addressable system. Include in the system all necessary wiring, raceways, pull boxes, terminal cabinets, outlet and mounting boxes, control equipment, alarm, and supervisory signal initiating devices, alarm notification appliances, supervising station fire alarm system transmitter, and other accessories and miscellaneous items required for a complete operating system even though each item is not specifically indicated or described. Provide the system complete and ready for operation.

Equipment and devices shall be compatible and operable with existing station fire alarm reporting system and shall not impair reliability or operational functions of the existing system. Existing station fire alarm reporting system is a digital alarm communicator system and utilizes DACT transmitters.

Equipment and devices shall be compatible and operable with existing station base wide mass notification system and shall not impair reliability or operational functions of the existing system. The base wide mass notification system utilizes Waves/Madahcom transceivers.

a. Provide equipment, materials, inspection, and testing in strict accordance with the required and advisory provisions of NFPA 72, ISO 7240-16, and IEC 60268-16 except as modified herein. The system layouts on the contract drawings show the intent of coverage and are shown in suggested locations. Final quantity, system layout, and coordination are the responsibility of the Contractor.

b. Where remote supplementary fire alarm control units, supplementary notification appliance circuit panels, or supplementary power supply panels are needed, they shall be provided at the locations indicated. Contact the NAVFAC MIDLANT Fire Protection Engineer if locations for remote panels have not been indicated. Each remote fire alarm control unit shall be powered from a wiring riser specifically for that use. Where remote fire control units are provided, equipment for notification appliances may be located in the remote fire alarm control units.

1.4.2 Technical Data and Computer Software

Computer software and technical data relating to computer software that are specifically identified in this project, and may be defined/required in other specifications, shall be delivered in accordance with the CONTRACT CLAUSES. Data to be submitted shall include complete system, equipment, and software descriptions. Descriptions shall show how the equipment will operate as a system to meet the performance requirements of the contract. The data package shall also include the following listed. Failure to fully comply with the following stipulations shall result in the removal and

replacement of the combination emergency communications system at no cost to the Government. Requests for extension of time for any delay to the completion of the project due to the removal, redesign, resubmittal process, and replacement of the original system will not be considered. Liquidated damages shall apply and will be accessed in accordance with the contract clauses.

a. Identification of programmable portions of system equipment and capabilities.

b. Description of system revision and expansion capabilities and methods of implementation detailing both equipment and software requirements.

c. Provision of operational software data on all modes of programmable portions of the combination emergency communications system.

d. Description of Fire Alarm Control Unit equipment operation.

e. Description of auxiliary and remote equipment operations.

f. Library of application software.

g. Operation and maintenance manuals.

1.4.3 Keys

Keys and locks for equipment, panels and devices shall be identical. Provide the Contracting Officer with no less than six (6) keys of each type required. Direct requests for keys from all Government personnel to the Contracting Officer. Under no circumstances shall the contractor provide any keys to the building occupants. If any portion of building is occupied during construction or occupants begin moving into the building prior to project completion, the fire alarm contractor shall remove and secure all keys to the combination emergency communications system. Keys shall be CAT 60.

1.5 SUBMITTALS

Government approval is required for submittals with a "G" designation; submittals not having a "G" designation are for the Prime Contractor Quality Control approval. The NAVFAC MIDLANT Fire Protection Engineer shall review and approve all submittals requiring Government approval.

If permitted by the Contracting Officer, provide electronic submittals. File format of electronic submittal materials shall be portable document format. No other electronic formats shall be accepted. Catalog data shall be first generation scans or manufacturer's originals. Shop drawings shall be plotted to scale. Scale all line weights. Submittals consisting of illegible pdf's shall be returned disapproved without review. One hard copy review set of the entire package, including full scale shop drawings, shall accompany each submittal for use by the NAVFAC MIDLANT Fire Protection Engineer. The single hard copy review set shall be retained by the Government reviewer. The Government reviewer shall digitally stamp, sign and lock the electronic submittal package prior to returning the electronic copy to the Contracting Officer.

Submit the following in accordance with Section 01 33 00 SUBMITTAL PROCEDURES:

SD-01 Preconstruction Submittals

Within 36 days of contract award but no less than 14 days prior to commencing any work on site, the Prime Contractor shall submit the following for review and approval:

Qualifications for Fire Alarm System Subcontractor; G

On Staff Fire Alarm System Designer(s); G

Supervising Fire Alarm Technician; G

Installing Technicians; G

Testing Personnel; G

Contractor SD-02,SD-03 & SD-05 submittals received prior to the review and approval of the Qualifications of the Fire Alarm Subcontractor shall be returned Disapproved Without Review. All resultant delays shall be the sole responsibility of the Prime Contractor.

Contract requirements for the Fire Alarm Contractor to have NICET Certified Fire Alarm Technicians on staff are NOT negotiable. The Prime Contractor's Quality Control Manager shall not endorse nor submit the qualifications for the fire alarm system subcontractor if fire alarm contractor does not have the required NICET Technicians on staff. All resultant delays shall be the sole responsibility of the Prime Contractor.

SD-02 Shop Drawings

Include Annotated catalog data, in table format on the drawings, showing manufacturer's name, model, voltage, and catalog numbers for equipment and components. Submitted shop drawings shall not be smaller than ANSI D (22 in x 34 in).

Wiring Diagrams; G

Provide point-to-point wiring diagrams showing the points of connection and terminals used for electrical field connections in the system, including interconnections between the equipment or systems that are supervised or controlled by the system. Diagrams shall show connections from field devices to the CECP and remote fire alarm control units, initiating circuits, switches, relays and terminals. Point-to-point wiring diagrams shall be job specific. Point-to-point wiring diagrams shall not indicate connections or circuits not being utilized.

Provide complete riser diagrams indicating the wiring sequence of devices and their connections to the control equipment. Include a color-code schedule for the wiring. Include floor plans showing the locations of devices, appliances, and equipment.

System Layout; G

Plan view drawing showing device locations, terminal cabinet locations, junction boxes, other related equipment, conduit

routing, conduit sizes, wire counts, wire color-coding, circuit identification in each conduit, and circuit layouts for all floors. Drawings shall comply with the requirements of NFPA 170, and NFPA 72. Indicate candela rating of each visual notification appliance. Indicate the wattage of each speaker. Clearly identify the locations of isolation modules. Indicate the addresses of all devices, modules, relays, etc.

System Operation; G

A complete list of device addresses, corresponding descriptions, and associated contact ID code for each address.

Provide a complete description of the system operation in matrix format.

Notification Appliances; G

Provide data on each circuit to indicate that there is at least 25 percent spare capacity on each notification appliance circuit, a 25 percent spare capacity for each supplementary notification appliance circuit panel and auxiliary power supply panel, and 25 percent spare capacity for each signaling line circuit. Annotate data for each circuit on the drawings.

Amplifiers; G

Provide data to indicate the amplifiers have sufficient capacity to simultaneously drive all notification speakers at the wattage setting required to meet intelligibility requirements while maintaining a minimum 25 percent spare capacity. Annotate data for each circuit on the drawings. Contractor shall be responsible for additional and/or larger amplifiers if adjustments during testing to meet intelligibility requirements reduces the spare capacities to less than 25 percent.

As-Built Drawings

Provide four sets of detailed as-built drawings. Furnish four sets of CD or DVD discs containing software back-up with CAD based drawings in latest version of AutoCAD *.dwg format of as-built drawings and schematics. Discs shall also include as-built drawings plotted to scale in *.pdf format along with *.pdf copies of the manufacturer's data, and calculations. The drawings shall include complete wiring diagrams showing point-to-point connections between devices and equipment, both factory and field wired. Include a riser diagram and drawings showing the as-built location of devices and equipment. The drawings shall show the system as installed, including deviations from both the contract drawings and the approved shop drawings. These drawings shall be submitted within 14 days after the final acceptance test of the system. At least one copy of the as-built (red-lined) drawings shall be provided at the time of, or prior to, the final acceptance test.

SD-03 Product Data

Provide UL or FM listing cards for equipment provided. Include annotated catalog data, in table format, showing manufacturer's

name, model, voltage and catalog numbers for all equipment and components.

Technical Data And Computer Software; G
Fire alarm control unit (FACU); G
Autonomous control unit (ACU); G
Combination emergency communications system panel (CECP); G
Digitalized voice generators; G
Amplifiers; G
Document box; G
Digital alarm communicator transmitter (DACT); G
Batteries; G
Battery chargers; G
Wiring and cable; G
Surge protection; G
Ceiling bridges for ceiling mounted appliances; G
Back boxes and conduit; G
Terminal cabinets/assemblies; G
Notification appliances; G
Addressable monitor module; G
Addressable control/relay module; G
Isolation module; G
Manual stations; G
Smoke detectors; G
Environmental enclosures or guards; G

Manufacturer's installation and maintenance manuals; G
Provide one copy of the most recent Manufacturer's installation and maintenance manuals for each piece of equipment being installed. This data is necessary for use by NAVFAC MIDLANT Fire Protection Engineering when reviewing the contractor's submittal. Manual may be submitted in *.pdf format and submitted directly to NAVFAC MIDLANT Fire Protection Engineering.

SD-05 Design Data

System Operation; G

Provide a complete description of the system operation, in matrix format, on the shop drawings.

Batteries; G

a. Verify battery capacity exceeds supervisory and alarm power requirements.

1). Substantiate the battery calculations for alarm, alert, and supervisory power requirements. Ampere-hour requirements for each system component and each panel component, and the battery-recharging period, shall be included.

2). Provide complete battery calculations for both the alarm, alert, and supervisory power requirements. Ampere-hour requirements for each system component shall be submitted with the calculations.

b. For battery calculations, use the following assumptions: Assume a starting voltage of 24 VDC for starting the calculations to size the batteries. Calculate the required Ampere-hour for the specified

standby time, and then calculate the required Ampere-hour for the specified alarm time. Calculate the nominal battery voltage after operation on batteries for the specified time period.

Voltage Drop Calculations; G

Provide voltage drop calculation to indicate sufficient voltage is available for proper operation of the system and all components, at the minimum rated voltage of the system operating on batteries.

Utilize the lump sum method for voltage drop calculations. Assume the entire appliance load is at the end of the circuit (lump sum). Utilize 16 VDC as the operating voltage of the appliances and 21.6 VDC as the voltage at the circuit terminals.

Spare Capacity Calculations; G

Provide calculations verifying the contract stipulated 25 spare capacity is provided for each notification appliance circuit, FACU/ACU, SNAC panel, and auxiliary power supply panel. Also provide a calculation indicating a 25 percent spare capacity is maintained for each SLC.

SD-06 Test Reports

Field Quality Control
Testing Procedures; G
Smoke detector testing procedures; G

SD-09 Manufacturer's Field Reports

Combination emergency communications system panel (CECP)

Provide reports on preliminary tests, include printer information. Include the NFPA 72 Record of Completion and NFPA 72 Inspection and Testing Form, with the appropriate test reports. printer generated data shall consist of a unique identifier for each device, combination emergency communications system panel, initiating device and notification appliance, with an indication of test results, and signature of the factory-trained technician of the control panel manufacturer and equipment installer.

SD-10 Operation and Maintenance Data

Operation and Maintenance (O&M) Instructions; G

Provide four copies of the Operation and Maintenance Instructions, indexed and in booklet form. The Operation and Maintenance Instructions shall be a single volume or in separate volumes, and may be submitted as a Technical Data Package. Manuals shall be approved prior to training.

Original and backup copies of all software delivered for this contract on each type of CD/DVD media utilized.

If permitted by the Contracting Officer, Operation and Maintenance (O&M) Instructions in electonic format. File format of electronic submittal materials shall be portable document format. No other electronic formats shall be accepted.

Instruction of Government Employees

The installers training history for the employees involved with this contract.

1.6 QUALITY ASSURANCE

Equipment and devices shall be compatible and operable with existing base wide fire alarm reporting system and shall not impair reliability or operational functions of existing system. The base wide fire reporting system utilizes DACT transmitters. The MNS transceivers shall be compatible with the existing base wide mass notification system.

a. In NFPA publications referred to herein, consider advisory provisions to be mandatory, as though the word "shall" had been substituted for "should" wherever it appears; interpret reference to "authority having jurisdiction" and/or AHJ to mean the Naval Facilities Engineering Command, MIDLANT, Fire Protection Engineer.

b. The recommended practices stated in the manufacturer's literature or documentation shall be considered as mandatory requirements.

c. Devices and equipment for fire alarm service shall be listed by UL Fire Prot Dir or approved by FM APP GUIDE.

1.6.1 Qualifications

1.6.1.1 Qualifications for Fire Alarm System Subcontractor

The Prime Contractor shall be responsible for obtaining the services of a qualified fire alarm system subcontractor for the design and installation of the combination emergency communications system. The firm designated by the Prime Contractor as their qualified fire alarm system subcontractor:

a. Shall have been in existence a minimum of four years prior to contract award.

b. Shall provide proof of previous experience installing a system of equal or greater complexity, utilizing the same equipment to be provided under this contract.

c. Shall provide proof of adequate qualified staffing to meet all of the following requirements:

1.6.1.1.1 On-Staff Fire Alarm System Designer(s)

A qualified fire alarm contractor shall have at least one on staff NICET Level IV SET, (Senior Engineering Technician) fire alarm technician. This technician shall also have proof of factory certified training for the design of the systems utilizing the equipment being installed. The NICET Level IV technician(s) shall be the lead technician responsible for the contractor's design of the combination emergency communications system, including, but not limited to, the selection and design of necessary equipment, battery, power and circuit calculations, provision of the required manufacturers data and the creation and completion of the shop drawings. The submittal materials (drawings, calculations & manufacturer's data) shall bear the stamp and signature of the NICET Level IV technician. RFI's pertaining to the combination emergency communications system shall

be reviewed and signed by the NICET Level IV technician prior to submission to the Contracting Officer.

A NICET Level III, ET (Engineering Technician) fire alarm technician may be utilized to create the shop drawings, calculations and submittal material provided the Level III technician is directly supervised by the NICET Level IV technician. The NICET Level IV technician remains responsible for the system design and submittal materials. Both technicians' signatures and stamps shall be included on the submittal material.

1.6.1.1.2 Supervising Fire Alarm Technician

A NICET Level II, AET (Associate Engineering Technician) fire alarm technician with a minimum of 8 years experience shall supervise the installation of the combination emergency communications system. The fire alarm technicians supervising the installation of equipment shall also be factory trained in the installation, adjustment, testing, and operation of the equipment specified herein and on the approved shop drawings. Supervising technician shall be a direct employee of the firm designated by the Prime Contractor as their qualified fire alarm system subcontractor.

1.6.1.1.3 Installing Technicians

The installing Contractor shall provide fire alarm technicians with a minimum of four years of experience utilized to assist in the installation and termination devices, appliances, cabinets and panels. The fire alarm technicians installing the equipment shall be factory trained in the installation, adjustment, testing, and operation of the equipment specified herein and on the approved shop drawings. Technicians with minimum NICET Level I or II Certification are preferred. Installing technicians shall be direct employees of the firm designated by the Prime Contractor as their qualified fire alarm system subcontractor.

1.6.1.1.4 Testing Personnel

The installing Contractor shall provide Fire Alarm Technicians with a minimum of eight years of experience utilized to test and certify the installation of the combination emergency communications system devices, appliances, cabinets and panels. The fire alarm technicians testing the equipment shall be factory trained in the installation, adjustment, testing, and operation of the equipment specified herein and on the approved shop drawings. Testing personnel shall be direct employees of the firm designated by the Prime Contractor as their qualified fire alarm system subcontractor.

1.6.2 Regulatory Requirements

1.6.2.1 Requirements for Fire Protection Service

Equipment and material shall be Listed by UL and listed in UL Fire Prot Dir, UL Electrical Constructn or Approved by FM and listed in FM APP GUIDE. Where the terms "listed" or "approved" appear in this specification, they shall mean listed in UL Fire Prot Dir or FM APP GUIDE. The omission of these terms under the description of any item of equipment described shall not be interpreted as waiving this requirement. All listings or approval by testing laboratories shall be from an ANSI or UL published standard.

1.7 DELIVERY, STORAGE, AND HANDLING

Protect equipment delivered and placed in storage from the weather, humidity, and temperature variation, dirt and dust, and other contaminants.

1.8 OPERATION AND MAINTENANCE (O&M) INSTRUCTIONS

The combination emergency communications system Operation and Maintenance Instructions shall include:

a. "Manufacturer Data Package 5" as specified in Section 01 78 23 OPERATION AND MAINTENANCE DATA. Provide an electronic copy of the OPERATION AND MAINTENANCE (O&M) INSTRUCTIONS

b. Operating manual outlining step-by-step procedures required for system startup, operation, and shutdown. The manual shall include the manufacturer's name, model number, service manual, parts list, and complete description of equipment and their basic operating features.

c. Maintenance manual listing routine maintenance procedures, possible breakdowns and repairs, and troubleshooting guide. The manuals shall include conduit layout, equipment layout and simplified wiring, and control diagrams of the system as installed.

d. The manuals shall include complete procedures for system revision and expansion, detailing both equipment and software requirements.

e. Software delivered for this project shall be provided, on CD or DVD discs.

f. Printouts of configuration settings for all devices.

g. Routine maintenance checklist. The routine maintenance checklist shall be arranged in columnar format. The first column shall list all installed devices, the second column shall state the maintenance activity or state no maintenance required, the third column shall state the frequency of the maintenance activity, and the fourth column for additional comments or reference.

1.9 Manufacturer's installation and maintenance manuals

Provide one copy of the most recent Manufacturer's installation and maintenance manuals for each piece of equipment being installed. This data is necessary for use by NAVFAC MIDLANT Fire Protection Engineering when reviewing the contractor's submittal. Manual may be submitted in *.pdf format and submitted directly to NAVFAC MIDLANT Fire Protection Engineering.

1.10 Calculations

Voltage Drop Calculations

Provide voltage drop calculation to indicate sufficient voltage is available for proper operation of the system and all components, at the minimum rated voltage of the system operating on batteries.

Utilize the lump sum method for voltage drop calculations. Assume the entire appliance load is at the end of the circuit (lump sum). Utilize 16 VDC as the operating voltage of the appliances and 21.6 VDC as the voltage at the circuit terminals.

Spare Capacity Calculations

Provide calculations verifying the contract stipulated 25 spare capacity is provided for each notification appliance circuit, FACU/ACU, SNAC panel, and auxiliary power supply panel. Also provide a calculation indicating a 25 percent spare capacity is maintained for each SLC.

1.11 WARRANTY PERIOD REPAIR SERVICE, MAINTENANCE AND ADJUSTMENTS

During guarantee period, the service technician shall be on-site within 24 hours after notification. All repairs shall be completed within 24 hours of arrival on-site. During the guarantee period, the installing fire alarm contractor is responsible for conducting all required testing and maintenance in accordance with the requirements and recommended practices of NFPA 72 and the system manufacturer. Installing fire alarm contractor is NOT responsible for any damage resulting from abuse, misuse or neglect of equipment by the end user

1.12 EXTRA MATERIALS

1.12.1 Repair Service/Replacement Parts

Repair services and replacement parts for the system shall be available for a period of ten years after the date of final acceptance of this work by the Contracting Officer.

1.12.2 Interchangeable Parts

Spare parts furnished shall be directly interchangeable with the corresponding components of the installed system. Spare parts shall be suitably packaged and identified by nameplate, tagging, or stamping. Spare parts shall be delivered to the Contracting Officer at the time of the final acceptance testing.

1.12.3 Spare Parts

Furnish the following spare parts and accessories:

a. Four fuses for each fused circuit

b. Two smoke detectors

c. Two addressable control modules

d. Two addressable interface modules

1.12.4 Special Tools

Software, connecting cables and proprietary equipment, necessary for the maintenance, testing, and reprogramming of the equipment shall be furnished to the Contracting Officer.

PART 2 PRODUCTS

2.1 MATERIALS AND EQUIPMENT

2.1.1 Manufacturer

Components shall be of current design and shall be in regular and recurrent production at the time of installation. Provide design, materials, and devices for a combination emergency communications system, complete, conforming to NFPA 72, except as otherwise or additionally specified herein.

2.1.2 Standard Products

Provide materials, equipment, and devices that are UL Listed or FM Approved for fire protection service when so required by NFPA 72 or this specification. Select material from one manufacturer, where possible, and not a combination of manufacturers, for any particular classification of materials. Material and equipment shall be the standard products of a manufacturer regularly engaged in the manufacture of the products for at least two years prior to bid opening.

2.1.3 Nameplates

Major components of equipment shall have the manufacturer's name, address, type or style, model or serial number, catalog number, date of installation, installing Contractor's name and address, and the contract number provided on a new plate permanently affixed to the item or equipment. Major components include, but are not limited to, the following:

a. CECP (includes component panels)

b. Automatic transmitters (for both the base-wide fire alarm reporting system and base-wide mass notification systems)

Furnish nameplates to obtain approval by the Contracting Officer before installation. Obtain approval by the Contracting Officer for installation locations. Nameplates shall be etched metal or plastic, permanently attached by screws to panels or adjacent walls.

2.2 GENERAL PRODUCT REQUIREMENT

All combination emergency communications system equipment shall be listed for use under the applicable reference standards.

2.3 FIRE ALARM CONTROL UNIT(FACU) AND AUTONOMOUS CONTROL UNIT(ACU)

Provide a complete control panel fully enclosed in a lockable steel enclosure as specified herein. At the designer's discretion, the FACU and ACU may be housed in separate panels that contain independent power supplies and batteries or the ACU may be housed in the same panel with the FACU as a Combination emergency communications system panel (CECP). Operations required for testing or for normal care and maintenance of the systems shall be performed from the front of the FACU enclosure. If more than a single unit is required at a location to form a complete control panel, the unit enclosures shall match exactly. If more than a single unit is required, and is located in the lobby/entrance, notify the Naval Facilities Engineering Command, Midlant, Fire Protection Engineer, prior to installing the equipment.

a. Each control unit shall provide power, supervision, control, and logic for the entire system, utilizing solid state, modular components, internally mounted and arranged for easy access. Each control unit shall be suitable for operation on a 120 Volt, 60 Hertz, normal building power supply. Provide each panel with supervisory functions for power failure, internal component placement, and operation.

b. Visual indication of alarm, supervisory, or trouble initiation on the fire alarm control unit shall be by liquid crystal display or similar means with a minimum of 80 characters, that at least 32 are field changeable. The ACU shall have the capability of temporarily deactivating the fire alarm messages while delivering voice messages. Provide conductor integrity monitoring for strobe, display, temporary deactivation of fire alarm audible notification appliances and speaker wiring.

c. Provide secure operator console with a microphone for delivering live voice messages. Provide adequate discrete outputs to temporarily deactivate fire alarm audible notification, and initiate/synchronize strobes. Provide a complete set of self-diagnostics for controller and appliance network. Provide local diagnostic information display and local diagnostic information and system event log file.

2.3.1 Cabinet

Install control panel components in cabinets large enough to accommodate all components and also to allow ample gutter space for interconnection of panels as well as field wiring. The enclosure shall be identified by an engraved laminated phenolic resin nameplate. Lettering on the nameplate shall say "Fire Alarm and Mass Notification Control Panel" and shall not be less than one inch high. Provide prominent rigid plastic or metal identification plates for lamps, circuits, meters, fuses, and switches. The cabinet shall be provided in a sturdy steel housing, complete with back box, hinged steel door with cylinder lock, and surface mounting provisions.

2.3.2 Control Modules

Provide power and control modules to perform all functions of the FACU. Provide audible signals to indicate any alarm, supervisory, or trouble condition. The alarm signals shall be different from the trouble signal. Connect circuit conductors entering or leaving the panel to screw-type terminals with each terminal marked for identification. Locate diodes and relays, if any, on screw terminals in the FACU. Circuits operating at 24 VDC shall not operate at less than 21.6 Volts. Circuits operating at any other voltage shall not have a voltage drop exceeding 10 percent of nominal voltage.

2.3.3 Silencing Switches

a. Alarm Silencing Switch: Provide an alarm silencing switch at the FACU that shall silence the audible signal but not affect the visual alarm indicator. This switch shall be overridden upon activation of a subsequent alarm.

b. Supervisory/Trouble Silencing Switch: Provide supervisory and trouble silencing switch that shall silence the audible trouble and supervisory signal, but not affect the visual indicator. This switch shall be overridden upon activation of a subsequent alarm, supervision, or trouble condition. Audible trouble indication must resound

automatically every 24 hours after the silencing feature has been operated.

2.3.4 Non-Interfering

Power and supervise each circuit such that a signal from one device does not prevent the receipt of signals from any other device. Circuits shall be manually reset by switch from the FACU after the initiating device or devices have been restored to normal.

2.3.5 Voice Notification System

The Voice Notification System shall comply with the requirements of NFPA 72 for Emergency Voice/Alarm Communications System requirements ISO 7240-16, IEC 60268-16, except as specified herein.

Tones and voice messages shall repeat until the control panel is reset or silenced. A live voice message shall override the automatic audible output through use of a microphone input at the control panel.

a. The system shall be a single or dual channel voice notification system incorporating user selectability of a minimum 8 distinct sounds for tone signaling, and the incorporation of a voice module for delivery of prerecorded messages.

b. The digitalized voice message shall consist of a non-volatile (EPROM) microprocessor based input to the amplifiers. The microprocessor shall actively interrogate circuitry, field wiring, and digital coding necessary for the immediate and accurate rebroadcasting of the stored voice data into the appropriate amplifier input. Loss of operating power, supervisory power, or any other malfunction that could render the digitalized voice module inoperative shall automatically cause the three tone temporal signal to take over all functions assigned to the failed unit.

c. When using the microphone, live messages shall be broadcast through all speakers. The system shall be capable of operating all speakers at the same time.

d. The Mass Notification functions shall override the manual or automatic fire alarm notification functions. The system shall have the capability of utilizing a remote microphone station with redundant controls of the notification system control panel. A hand held microphone shall be provided and, upon activation, shall take priority over any tone signal, recorded message or PA microphone operation in progress, while maintaining the strobe Notification Appliance Circuits activation.

Where the Combined Emergency Communications System consists of separate autonomous control and fire alarm control units, a Class X pathway shall be provided as the means for activating the strobe appliances.

The activation of the strobe circuits shall follow the operation of the speaker notification appliance circuits.

Audio output shall be selectable for line level (600 ohms), 25 or 70.7 volt output.

The audio amplifier outputs shall be not greater than 100 watts RMS

output.

The strobe notification appliance circuits shall provide at least 2 amps of 24 VDC power to operate strobes and have the ability to synchronize all strobes.

All outputs and operational modules shall be fully supervised with on-board diagnostics and trouble reporting circuits.

Form "C" contacts shall be provided for system alarm and trouble conditions.

Circuits shall be provided for operation of auxiliary appliances during trouble conditions.

During a Mass Notification event the panel shall not generate nor cause any trouble alarms to be generated with the fire alarm portion of the combination emergency communications system.

Mass Notification functions shall take precedence over all other function performed by the Voice Notification System.

Messages shall be recorded professionally utilizing standard industry methods and be recorded utilizing a professional female voice. Message and tone volumes shall both be at the same decibel level. Messages recorded from the system microphone shall not be accepted. Messages shall be the following:

1) FIRE ALARM MESSAGE: Three Tone Temporal Pattern (0.5 sec on, 0.5 second off, 0.5 second on, 0.5 second off, 0.5 second on, 1.5 second off.) The alarm signal shall be a square wave. The wave shall have a fundamental frequency of 520 Hz ± 10 percent followed by:

"May I have your attention, please. May I have your attention, please. A fire has been reported in the building. Please leave the building by the nearest exit" Provide a 2 second pause. Repeat the tones and message.

a. Auxiliary Input Module shall be designed to be an outboard expansion module to either expand the number of optional remote microphone stations, or allow a telephone interface.

2.3.6 Memory

Provide each control unit with non-volatile memory and logic for all functions. The use of long-life batteries, capacitors, or other age-dependent devices shall not be considered as equal to non-volatile processors, PROMS, or EPROMS.

2.3.7 Field Programmability

Provide control units and control panels that are fully field-programmable for control, initiation, notification, supervisory, and trouble functions of both input and output. The system program configuration shall be menu driven. System changes shall be password protected and shall be accomplished using personal computer-based equipment. Any proprietary equipment and proprietary software needed by qualified technicians to implement future changes to the combination emergency communications system shall be provided as part of this contract. Passwords for all levels of access shall be provided to the Contracting Officer.

2.3.8 Input/Output Modifications

The FACU shall contain features allowing the bypass of input devices from the system or the modification of system outputs. These control features shall consist of a panel mounted keypad or a keyboard. Any bypass or modification to the system shall indicate a trouble condition on the FACU .

2.3.9 Resetting

Provide the necessary controls to prevent the resetting of any alarm, supervisory, or trouble signal while the alarm, supervisory or trouble condition exists on the system.

2.3.10 Instructions

Provide a typeset printed or typewritten instruction card mounted behind a Lexan plastic cover in a stainless steel or aluminum frame. Install the instructions on the interior of the FACU. The card shall show those steps to be taken by an operator when a signal is received, as well as the functional operation of the system under all conditions; normal, alarm, supervisory, and trouble. The instructions shall be approved by the Contracting Officer before being posted.

2.3.11 Walk Test

The FACU shall have a walk test feature. When using this feature, operation of initiating devices shall result in limited system outputs, so that the notification appliances operate for only a few seconds and the event is indicated on the system printer, but no other outputs occur.

2.3.12 History Logging

In addition to the required printer output, the control panel shall have the ability to store a minimum of 400 events in a log. These events shall be stored in a battery-protected memory and shall remain in the memory until the memory is downloaded or cleared manually. Resetting of the control panel shall not clear the memory.

2.3.13 RS-232-C Output

Each local control panel shall be capable of operating remote service type printers, and/or modems. The output shall be paralleled ASCII from an EIA RS-232-C connection with a baud rate of 1200 or 2400 to allow use of any commonly available CRT, printer, or modem.

2.4 AMPLIFIERS PREAMPLIFIERS, DIGITALIZED VOICE GENERATORS

Any amplifiers, preamplifiers, digitalized voice generators, and other hardware necessary for a complete, operational, textual audible circuit conforming to NFPA 72 shall be housed within panels. The system shall automatically operate and control all building fire alarm speakers. Each amplifier shall be single output channel. The provision of backup amplifiers is not a contract requirement.

2.4.1 Construction

Amplifiers shall utilize computer-grade, solid-state components and shall be provided with output protection devices sufficient to protect the

amplifier against any transient voltage up to ten times the highest rated voltage in the system.

2.4.2 Inputs

Each system shall be equipped with separate inputs from the digitalized voice driver and panel mounted microphone. Microphone inputs shall be of the low impedance, balanced line type. Both microphone and tone generator input shall be operational on any amplifier.

2.4.3 Message Tones

Message tones shall be stored digitally. Tones shall be either attached to the recorded message or be able to be programmed via the system software or by selector programming switches within the main control unit.

2.4.4 Protection Circuits

Each amplifier shall be constantly supervised for any condition that could render the amplifier inoperable at its maximum output. Failure of any component shall cause, illumination of a visual "amplifier trouble" indicator on the CECP,

2.5 Base-Wide Control

A base-wide control system for mass notification exists, the autonomous control unit shall be capable of communicating with the central control unit of the base-wide system. The autonomous control unit shall receive commands/messages from the central control unit and provide status information.

2.6 INTERFACE TO THE BASE-WIDE MASS NOTIFICATION NETWORK

2.6.1 Base wide mass notification system transceiver (Not in Contract, provided by SPAWAR)

The transceiver utilized in the Mass Notification System shall be capable of the following:

a. Communication with the Central Control/Monitoring System to provide supervision of communication link and status changes are reported by automatic and manual poll/reply/acknowledge routines.

b. All monitored points/status changes are transmitted immediately and at programmed intervals until acknowledged by the Central Control/Monitoring System.

c. Each transceiver shall transmits a unique identity code as part of all messages; the code is set by the user at the transceiver.

2.6.1.1 Radio Frequency Communications for Base Wide Mass Notification System

Use of radio frequency-type communications systems shall comply with National Telecommunications and Information Administration (NTIA) requirements.

2.6.1.2 Licensed Radio Frequency Systems for Base Wide Mass Notification System

An approved DD Form 1494 for the system is required prior to operation.

2.6.2 RS-232/RS-485

The panel shall support a direct connect via RS-232 or RS-485 connections.

2.7 AUTOMATIC FIRE TRANSMITTERS

2.7.1 Digital Alarm Communicator Transmitter (DACT)

Provide DACT that is compatible with the existing supervising station fire alarm system. Transmitter shall have a means to transmit alarm, supervisory, and trouble conditions via a single transmitter. Transmitter shall have a source of power for operation that conforms to NFPA 72. Transmitter shall be capable of initiating a test signal daily at any selected time. Transmitter shall be arranged to seize telephone circuits in accordance with NFPA 72.

2.7.2 Signals to Be Transmitted to the Base Receiving Station

All signals (all points) shall be sent to the base receiving station:

a. Fire alarm

b. Supervisory

c. Trouble

2.8 EMERGENCY POWER SUPPLY

Provide emergency power for system operation in the event of primary power source failure. Transfer from normal to auxiliary (secondary) power or restoration from auxiliary to normal power shall be automatic and shall not cause transmission of a false alarm.

2.8.1 Batteries

Provide sealed, maintenance-free, lead-calcium or sealed lead acid batteries as the source for emergency power to the CECPs. Batteries shall contain suspended electrolyte. The battery system shall be maintained in a fully charged condition by means of a solid-state battery charger. Provide an automatic transfer switch to transfer the load to the batteries in the event of the failure of primary power.

2.8.1.1 Capacity

Provide the batteries with sufficient capacity to operate the system under the most demanding of the following conditions. Conditions are considered individually. Do not combine the two conditions.

a. Under supervisory and trouble conditions, including audible trouble signal devices for 48 hours and audible and visual signal appliances under alarm conditions for an additional 15 minutes.

b. Under alarm conditions with audible and visual notification appliances operating for 60 minutes.

2.8.2 Battery Chargers

Provide a solid-state, fully automatic, variable charging rate battery charger. The charger shall be capable of providing 150 percent of the connected system load and shall maintain the batteries at full charge. In the event the batteries are fully discharged (18 Volts DC), the charger shall recharge the batteries back to 95 percent of full charge within 48 hours. Provide pilot light to indicate when batteries are manually placed on a high rate of charge as part of the unit assembly if a high rate switch is provided.

2.8.3 Battery Cabinets

Locate battery cabinets below the FACU. Battery cabinets shall be installed at an accessible location when standing at floor level. Battery cabinets shall not be installed lower than 12 inches above finished floor. Installing batteries above drop ceilings or in inaccessible locations is prohibited. Battery cabinets shall be large enough to accommodate batteries and also to allow ample gutter space for interconnection of panels as well as field wiring. The enclosure shall be identified by an engraved laminated phenolic resin nameplate. Lettering on the nameplate shall indicate the panel(s) the batteries power and shall not be less than one inch high. The cabinet shall be provided in a sturdy steel housing, complete with back box, hinged steel door with cylinder lock, and surface mounting provisions.

2.9 WIRING

Provide wiring materials under this section as specified in Section 26 20 00 INTERIOR DISTRIBUTION SYSTEM with the additions and modifications specified herein.

2.9.1 Alarm Wiring

The SLC wiring shall be solid copper cable in accordance with the manufacturers requirements. Copper signaling line circuits and initiating device circuit field wiring shall be No. 16 AWG size conductors at a minimum. Notification appliance circuit conductors, other than speakers, shall be solid copper No. 14 AWG size conductors at a minimum. Speaker circuits shall be copper No. 16 AWG size conductors at a minimum. Wire size shall be sufficient to prevent excessive voltage drop. Circuits operating at 24 VDC shall not operate at less than 21.6 volts. Circuits operating at any other voltage shall not have a voltage drop exceeding 10 percent of nominal voltage. Power wiring, operating at 120 VAC minimum, shall be a minimum No. 12 AWG solid copper having similar insulation.

2.10 OVERVOLTAGE AND SURGE PROTECTION

2.10.1 Power Circuit Surge Protection

System panel power circuits shall be protected against surges induced on any circuit and shall comply with the applicable requirements of IEEE C62.41.1 and IEEE C62.41.2. Cables and conductors shall have surge protection circuits installed at each end that meet the following waveform(s):

a. A 10 microsecond by 1000 microsecond waveform with a peak voltage of 1500 volts and a peak current of 60 amperes.

b. An 8 microsecond by 20 microsecond waveform with a peak voltage of 1000 volts and a peak current of 500 amperes. Protection shall be provided at the equipment. Additional triple electrode gas surge protectors, rated for the application, shall be installed on each wireline circuit within 3 feet of the building cable entrance. Fuses shall not be used for surge protection.

2.10.2 Wiring Surge Protection

Digital and analog inputs and outputs shall be protected against surges induced by sensor wiring installed outdoors and as shown. The inputs and outputs shall be tested with the following waveforms:

a. A 10 by 1000 microsecond waveform with a peak voltage of 1500 volts and a peak current of 60 amperes.

b. An 8 by 20 microsecond waveform with a peak voltage of 1000 volts and a peak current of 500 amperes. Fuses shall not be used for surge protection.

2.11 CEILING BRIDGES

Provide ceiling bridges for ceiling-mounted appliances. Ceiling bridges shall be as recommended/required by the manufacturer of the ceiling-mounted notification appliance.

2.12 BACK BOXES AND CONDUIT

In addition to the requirements of SPECIFICATION SECTION 26 20 00 INTERIOR DISTRIBUTION SYSTEM; provide all wiring in rigid metal conduit or intermediate metal conduit unless specifically indicated otherwise. Minimum conduit size shall be 3/4 inch in diameter except for 1/2 inch drops to individual devices. Do not use electrical non-metallic tubing (ENT) or flexible non-metallic tubing and associated fittings.

Provide rigid metal back boxes of adequate size and depth as recommended by the manufacturer of the appliance or device installed.

2.13 NOTIFICATION APPLIANCES

2.13.1 Audio Notification Appliance Network

The notification appliance network consists of textual audible appliances (speakers) located to provide intelligible instructions at areas as indicated on the contract drawings.

2.13.2 Fire Alarm/Mass Notification Speakers

Audible appliances shall conform to the applicable requirements of UL 464. Appliances shall be connected into notification appliance circuits. Surface mounted audible appliances shall be painted red. Recessed audible appliances shall be installed with a grill that is painted with a factory finish to match the surface to which it is mounted.

a. Textual audible appliances (speakers) shall conform to the applicable requirements of UL 1480. Speakers shall have six different sound output levels and operate with audio line input levels of 70 Volts AC, and 25 Volts AC, by means of selectable tap settings.

Speaker tap settings shall include taps of 1/4, 1/2, 1, 2. Speakers shall incorporate a high efficiency speaker for maximum output at minimum power across a frequency range of 400Hz to 4000Hz. Speakers shall have a sealed back construction.

Where speakers and strobes are provided in the same location, they may be combined into a single unit. All inputs shall be polarized for compatibility with standard reverse polarity supervision of circuit wiring via the Fire Alarm Control Unit or Voice Notification System.

b. Provide speaker mounting plates constructed of cold rolled steel having a minimum thickness of 16 gauge and equipped with mounting holes and other openings as needed for a complete installation. Fabrication marks and holes shall be ground and finished to provide a smooth and neat appearance for each plate. Each plate shall be primed and painted.

Speakers mounted on the exterior of the building, within unconditioned spaces or in the vicinity of showers shall be Listed weather-proof appliances.

2.13.3 Visual Notification Appliances

Visual notification appliances shall conform to the applicable requirements of UL 1971 and conform to the Americans With Disabilities Act (ADA). Fire Alarm/Mass Notification Appliances shall have clear high intensity optic lens, xenon flash tubes, and output white light and be marked "ALERT" in red letters. Appliances with decals or adhesive labels, whether factory or field applied, are prohibited. The light pattern shall be disbursed so that it is visible above and below the strobe and from a 90 degree angle on both sides of the strobe. Strobe flash rate shall be one flash per second and a minimum of 15 candela based on the UL 1971 test. Strobe shall be semi-flush mounted. Provide synchronized operation.

2.13.4 Connections

Provide screw terminals for each notification appliance. Terminals shall be designed to accept the size conductors used in this project without modification.

2.14 ADDRESSABLE MONITOR MODULE

The initiating device being monitored shall be configured as a Class B initiating device circuits. The system shall be capable of defining any module as an alarm module and report alarm, trouble, loss of polling, or as a supervisory module, and reporting supervisory short, supervisory open or loss of polling such as waterflow switches, valve supervisory switches, fire pump monitoring, independent smoke detection systems, relays for output function actuation, and other similar functions. The module shall be UL or FM listed as compatible with the control panel. The monitor module shall provide address setting means compatible with the control panel's SLC supervision and store an internal identifying code. Monitor module shall contain an integral LED that flashes each time the monitor module is polled. Pull stations with a monitor module in a common backbox are not required to have an LED. LED shall be visible without needing to remove the backbox cover plate.

2.15 ADDRESSABLE CONTROL/RELAY MODULE

The control module shall be capable of operating as a relay (form C contacts) for interfacing the control panel with other systems, and to control door holders or initiate elevator fire service. The module shall be UL or FM listed as compatible with the control panel. The indicating device or the external load being controlled shall be configured as a Class B Pathway. The system shall be capable of supervising, audible, visual and dry contact circuits. The control module shall have both an input and output address. The supervision shall detect a short on the supervised circuit and shall prevent power from being applied to the circuit. Circuit between the module and the equipment/feature controls is permitted be configured as Class D pathways. The pathway is unsupervised but has a fail-safe operation that performs the intended function when the connection is lost.The control model shall provide address setting means compatible with the control panel's SLC supervision and store an internal identifying code. The control module shall contain an integral LED that flashes each time the control module is polled. Control Modules shall be located in environmental areas that reflect the conditions to which they were listed. LED shall be visible without needing to remove the backbox cover plate.

2.16 ISOLATION MODULE

Provide isolation modules to subdivide each Class A signaling line circuit pathway into groups of a maximum of 20 devices but no more than recommended by the equipment manufacturer between adjacent isolation modules. Isolation modules may be modules or combination detector base/isolation module. LED shall be visible without needing to remove the backbox cover plate.

2.17 MANUAL STATIONS

Provide addressable manual pull stations. Manual pull stations shall be metal or plastic, semi-flush mounted, double action, addressable manual stations, that are not subject to operation by jarring or vibration. Stations shall be equipped with screw terminals for each conductor. Stations that require the replacement of any portion of the device after activation are not permitted. Stations shall be finished in fire-engine red with molded raised lettering operating instructions of contrasting color. The use of a key or wrench shall be required to reset the station. Manual stations shall be mounted at 48 inches. Stations shall have a separate screw terminal for each conductor.

2.18 SMOKE DETECTORS

2.18.1 Photoelectric Smoke Detectors

Provide addressable photoelectric smoke detectors as follows:

a. Provide analog/addressable photoelectric smoke detectors utilizing the photoelectric light scattering principle for operation in accordance with UL 268. Smoke detectors shall be listed for use with the fire alarm control unit.

b. Provide self-restoring type detectors that do not require any readjustment after actuation at the FACU to restore them to normal operation. Smoke detectors shall be UL Listed or FM Approved as smoke-automatic fire detectors.

c. Components shall be rust and corrosion resistant. Vibration shall have no effect on the detector's operation. Protect the detection chamber with a fine mesh metallic screen that prevents the entrance of insects or airborne materials. The screen shall not inhibit the movement of smoke particles into the chamber.

d. Provide twist lock bases for the detectors. The detectors shall maintain contact with their bases without the use of springs. Provide companion mounting base with screw terminals for each conductor. Terminate field wiring on the screw terminals. The detector shall have a visual indicator to show actuation.

e. The detector address shall identify the particular unit, its location within the system, and its sensitivity setting. detectors shall be of the low voltage type rated for use on a 24 VDC system.

f. An operator at the control panel, having a proper access level, shall have the capability to manually access the following information for each initiating device.

(1) Primary status

(2) Device type

(3) Present average value

(4) Present sensitivity selected

(5) detector range (normal, dirty, etc.)

2.18.2 Smoke Detector Testing

Smoke detectors shall be tested in accordance with NFPA 72 and manufacturer's recommended calibrated test method.

2.19 ENVIRONMENTAL ENCLOSURES OR GUARDS

Environmental enclosures shall be provided to permit Fire Alarm or Mass Notification components to be used in areas that exceed the environmental limits of the listing. The enclosure shall be listed for the device or appliance as either a manufactured part number or as a listed compatible accessory for the UL category the component is currently listed. Guards required to deter mechanical damage shall be either a listed manufactured part or a listed accessory for the category of the initiating device or notification appliance.

2.20 SYSTEM OPERATION

The combination emergency communications system shall be a complete, supervised, noncoded, analog/addressable fire alarm and mass notification system conforming to NFPA 72, UL 864, and UL 2017. The system shall be activated into the alarm mode by actuation of any fire alarm initiating device. The system shall remain in the alarm mode until the initiating device is reset and the fire alarm control panel is reset and restored to normal. The system may be placed in the alert mode by local microphones or remotely from authorized locations/users.

2.20.1 Fire Alarm and Supervisory Initiating Devices

Connect alarm initiating devices to Class A signal line circuit (SLC) pathways, and install in accordance with NFPA 72.

In accordance with NFPA 72 the number of addresses between isolation modules on a Class A SLC pathway is limited to 50 addresses OR the maximum number of addresses per the manufacturer (most manufacturers limit the number of addresses between isolation modules to 20 addresses.)

a. Contractor shall utilize Class A signal line circuit pathways

b. Any single impairment of the system shall not affect the system on more than one-half of any floor.

c. The system shall operate in the alarm mode upon activation of any fire alarm initiating device. The system shall remain in alarm mode until initiating device(s) are reset and the fire alarm control panel is manually reset and restored to normal. Audible and visual appliances and systems shall comply with NFPA 72. Fire alarm system/mass notification system components requiring power, except for the control panel power supply, shall operate on 24 VDC.

2.20.2 Functions and Operating Features

The system shall provide the following functions and operating features:

a. The Combination Emergency Communications System Panels (CECP) whether separate or combined Fire Alarm Control Units (FACU) and Autonomous Control Units (ACU), shall provide power, annunciation, supervision, and control for the system. Systems shall be microcomputer (microprocessor or microcontroller) based addressable systems with a minimum word size of eight bits with sufficient memory to perform as specified.

b. Provide Class B initiating device circuit pathways for conductor lengths of 10 feet or less.

c. Provide Class A signaling line circuit pathways with isolators.

d. Provide Class B Control circuits. Class D control circuits are permissible when the the intended operation has fail-safe operation. Fail-safe operation is when the intended operation is performed in the event of a pathway failure.

e. Provide Class B notification appliance circuit pathways. Visual alarm notification appliances shall have the flash rates synchronized.

i. Provide alarm verification capability for smoke detectors. Alarm verification shall initially be set for 20 seconds.

j. Provide program capability via switches in a locked portion of the FACU to bypass the automatic notification appliance circuits, fire reporting systemair handler shutdown, door release, door unlocking features. Operation of this programming shall indicate this action on the FACU display and system printer output.

k. Alarm, supervisory, and trouble signals shall be automatically transmitted to the fire department.

l. Alarm functions shall override trouble or supervisory functions. Supervisory functions shall override trouble functions.

m. Programmed information shall be stored in non-volatile memory.

n. The system shall be capable of operating, supervising, and/or monitoring both addressable and non-addressable alarm and supervisory devices.

o. There shall be no limit, other than maximum system capacity, as to the number of addressable devices, that may be in alarm simultaneously.

p. Where the fire alarm system is responsible for initiating an action in another emergency control device or system, such as an HVAC system, the addressable fire alarm relay shall be within 3 feet of the emergency control device.

q. An alarm signal shall automatically initiate the following functions:

(1) Transmission of an alarm signal to the fire department.

(2) Visual indication of the device operated on the FACU. Indication on the annunciator shall be by floor & room number, device address, and device type.

(3) Continuous actuation of all alarm notification appliances.

(4) Recording of the event electronically in the history log of the FACU.

(5) Release of doors held open by electromagnetic devices.

(6) Release of power to electric locks on doors that are part of the means of egress.

r. A supervisory signal shall automatically initiate the following functions:

(1) Visual indication of the device operated on the FACU, and on the remote annunciator. Indication on the annunciator shall be by floor & room number, device address, and device type.

(2) Sound the audible alarm at the respective panels.

(3) Transmission of a supervisory signal to the fire department.

(4) Recording of the event electronically in the history log of the FACU.

(5) Supervisory signals shall be non-latching.

(6) Operation of a duct smoke detectors shall shut down the appropriate air handler in accordance with NFPA 90A in addition to other requirements of this paragraph.

s. A trouble condition shall automatically initiate the following functions:

(1) Visual indication of the system trouble on the FACU, and on the remote annunciator and sound the audible alarm at the respective panels.

(2) Transmission of a trouble signal to the fire department.

(3) Recording of the event electronically in the history log of the fire control system unit.

(4) Trouble conditions shall be non-latching.

2.21 RECORDS

2.21.1 Document Box

Provide document box per NFPA 72 to properly house the system shop drawing as-builts, operation and maintenance manuals (on CDs), software CD/DVDs, test reports, etc. as noted in NFPA 72. Document box shall be steel with locking, hinge mounted door labeled SYSTEM RECORD DOCUMENTS.

2.22 ELECTRIC POWER

Primary power to combination emergency communications system panels and equipment

Primary power shall be 120 VAC service for the CECPs and equipment Primary power shall be supplied from the AC service to the building. Provide dedicated branch circuit(s) supplying all CECPs & equipment including but not limited to FACU's, ACU's, supplementary power supplies, SNAC panels, etc. Branch circuits shall supply no loads other than those associated with the combination emergency communications system. The circuit disconnecting means and all branch-circuit overcurrent protective devices shall be located within a single panel located in the building's main electrical room. The location of the branch-circuit overcurrent protective device shall be permanently identified at the combination emergency communications system panels/enclosures. The circuit disconnecting means shall have red identification, shall be accessible only to qualified personnel, and shall be identified as "FIRE ALARM CIRCUIT." The red identification shall not damage the overcurrent protective devices or obscure the manufacturer's markings. This branch circuit shall not be supplied through ground-fault circuit interrupters or arc-fault circuit-interrupters.

Combination emergency communications system panels and equipment(s) includes, but is not limited to; fire alarm control units (FACU), autonomous control units (ACU), local operating consoles (LOC), supplementary fire alarm control units, supplementary notification appliance circuit panels, auxiliary power supply panels, fire alarm system printers, mass notification system transceivers, fire alarm reporting system transmitters, and circuits powering 120VAC door holders.

PART 3 EXECUTION

3.1 INSTALLATION OF COMBINATION EMERGENCY COMMUNICATIONS SYSTEM EQUIPMENT DEVICES AND APPLIANCES

a. Locate the panels associated with the COMBINATION EMERGENCY COMMUNICATIONS SYSTEM (FACU, ACU, Amplifiers, and Fire alarm

transmitter) where indicated on the contract drawings. Surface mount panels with the top of the cabinet 6 feet above the finished floor or center the panels at 5 feet, whichever is lower. Conductor terminations shall be labeled and a drawing containing conductors, their labels, their circuits, and their interconnection shall be permanently mounted inside the panels.

b. Manual Stations: Locate manual stations where shown on the contract drawings. Mount stations so the operating handles are 4 feet above the finished floor. Mount stations so they are located no more than 5 feet from the exit door they serve, measured horizontally.

c. Notification Appliances: Locate notification appliances where shown on the contract drawings. Mount assemblies on walls 90 inches above the finished floor or 6 inches below the ceiling whichever is lower. Ceiling mounted speakers shall conform to NFPA 72.Provide additional speakers as necessary to meet the intelligibility requirements indicated on the contract drawings.

d. Smoke detectors: Locate detectors as shown on the contract drawings on a 4 inch mounting box. Detectors located on the ceiling shall be installed not less than 4 inches from a side wall to the near edge. Those located on the wall shall have the top of the detector at least 4 inches below the ceiling, but not more than 12 inches below the ceiling. Install smoke detectors no closer than 5 feet from air handling supply outlets.

3.2 SYSTEM FIELD WIRING

3.2.1 Wiring within Cabinets, Enclosures, and Boxes

Provide wiring installed in a neat and workmanlike manner and installed parallel with or at right angles to the sides and back of any box, enclosure, or cabinet. Conductors that are terminated, spliced, or otherwise interrupted in any enclosure, cabinet, mounting, or junction box shall be connected to terminal blocks. Mark each terminal in accordance with the wiring diagrams of the system. Make connections with approved pressure type terminal blocks, that are securely mounted. The use of wire nuts or similar devices shall be prohibited. Wiring shall conform to NFPA 70.

3.2.2 Terminal Cabinets

Provide a terminal cabinet at the base of any circuit riser, on each floor at each riser, and where indicated on the drawings. Terminal size shall be appropriate for the size of the wiring to be connected. Conductor terminations shall be labeled and a drawing containing conductors, their labels, their circuits, and their interconnection shall be permanently mounted in the terminal cabinet. Minimum size is 8 inches by 8 inches. Terminal strips shall be securely mounted inside. Utilizing tape or glue is not an acceptable means of mounting terminal strips.

3.2.3 Conduit

Minimum conduit size shall be 3/4 inch in diameter except for 1/2 inch drops to individual devices. Conceal conduit in finished areas of new construction. Run conduit or tubing concealed unless specifically shown otherwise on the drawings. Provide an insulated green grounding conductor for all circuit(s) installed in conduit.

a. Galvanized rigid steel (GRS) conduit shall be utilized where exposed to weather, where subject to physical damage, and where exposed on exterior of buildings. Intermediate Metal Conduit (IMC). IMC may be used in lieu of GRS as allowed by NFPA 70.

b. Electrical Metallic Tubing (EMT) is permitted above suspended ceilings or exposed where not subject to physical damage. EMT shall have a factory applied red exterior coating. Do not use EMT underground, encased in concrete, mortar or grout, in hazardous locations, where exposed to physical damage, outdoors or in fire pump rooms. Use die-cast compression connectors.

c. Flexible metal conduit can be used, limited to 6 ft length. Use liquidtight flexible metal conduit in damp and wet locations.

d. Schedule 40 (minimum) Polyvinyl Chloride (PVC) is permitted where conduit is routed underground below floor slabs. Convert nonmetallic conduit, other than PVC Schedule 40 or 80, to plastic-coated rigid, or IMC, steel conduit before turning up through floor slab.

3.2.4 Wire

Voltages shall not be mixed in any junction box, housing, or device, except those containing power supplies and control relays. Shielded wiring shall be utilized where recommended by the manufacturer. For shielded wiring, the shield shall be grounded at only one point, that shall be in or adjacent to the FACU. Pigtail or T-tap connections to signal line circuits, initiating device circuits, supervisory alarm circuits, and notification appliance circuits are prohibited. Pull all conductors splice free. Color coding is required for circuits and shall be maintained throughout the circuit. Conductors used for the same functions shall be similarly color coded. Wiring shall conform to NFPA 70.

3.2.5 Conductor Terminations

Label all conductor terminations in panels and equipment associated with the combination emergency communications system (FACU, ACU, Amplifiers, MNS transmitter and Fire alarm transmitter) Each conductor or cable shall have a shrink-wrap label to provide a unique and specific designation. Each combination emergency communications system cabinet and panel shall contain a laminated drawing that indicates each conductor, its label, circuit, and terminal. The laminated drawing shall be neat, using 12 point lettering minimum size, and mounted within each cabinet, panel, or unit so that it does not interfere with the wiring or terminals.

3.3 FIRESTOPPING

Provide firestopping for conduit penetrations through fire rated floor slabs, walls, partitions, and shaft enclosures in accordance with Section 07 84 00 FIRESTOPPING.

3.4 PAINTING

Paint exposed electrical, fire alarm conduit, and surface metal raceway to match adjacent finishes in exposed areas. In lieu of painting conduit, the contractor may utilize red conduit with a factory applied finish. Paint junction box covers, and conduit red in unfinished areas. Painting shall comply with Section 09 90 00 PAINTS AND COATINGS.

In lieu of painting conduit, the contractor may utilize red conduit with a factory applied finish.

In finished areas, paint exposed fire alarm conduit, surface metal raceways, junction boxes, and electrical boxes to match adjacent finishes. The inside cover of the junction box must be identified as "Fire Alarm" and the conduit must have painted red bands 3/4 inch wide at 10 foot centers and at each side of a floor, wall, or ceiling penetration.

3.5 FIELD QUALITY CONTROL

3.5.1 Testing Procedures

Submit detailed test procedures prepared and signed by a NICET Level 3 or 4 Fire Alarm Technician, and signed by representative of the installing company, for the fire detection and alarm system 60 days prior to performing system tests. Detailed test procedures shall list all components of the installed system such as initiating devices and circuits, notification appliances and circuits, signaling line devices and circuits, control devices/equipment, batteries, transmitting and receiving equipment, power sources/supply, annunciators, special hazard equipment, emergency communication equipment, interface equipment, and transient (surge) suppressors. Test procedures shall include sequence of testing, time estimate for each test, and sample test data forms. The test data forms shall be in a check-off format (pass/fail with space to add applicable test data) and shall be used for the preliminary testing and the acceptance testing. The test data forms shall record the test results and shall:

a. Identify the NFPA Class of pathways for all Initiating Device Circuits (IDC), Notification Appliance Circuits (NAC), Voice Notification System, and Signaling Line Circuits (SLC).

b. Identify each test required by NFPA 72 Test Methods and required test herein to be performed on each component, and describe how this test shall be performed.

c. Identify each component and circuit as to type, location within the facility, and unique identity within the installed system. Provide necessary floor plan sheets showing each component location, test location, and alphanumeric identity.

d. Identify all test equipment and personnel required to perform each test (including equipment necessary for testing smoke detectors using real smoke).

e. Provide space to identify the date and time of each test.

f. Provide space to identify the names and signatures of the individuals conducting and witnessing each test.

3.5.2 Tests Stages

a. Preliminary Testing: Conduct preliminary tests to ensure devices and circuits are functioning properly. Tests shall meet the requirements of paragraph entitled "Minimum System Tests." After preliminary testing is complete, provide a letter certifying the installation is complete and fully operable. The letter shall state each initiating and indicating device was tested in place and

functioned properly. The letter shall also state that panel functions were tested and operated properly. The letter shall include the names and titles of the witnesses to the preliminary tests. The Contractor and an authorized representative from each supplier of equipment shall be in attendance at the preliminary testing to make necessary adjustments.

b. Request for Formal Inspection and Tests: Requests for Formal Inspection and Tests shall not be submitted until after the connections to the base wide fire reporting system and the base wide mass notification system have been completed and fully functional When preliminary tests have been completed and corrections made, submit a signed, dated certificate with a request for formal inspection and tests to the Naval Facilities Engineering Command, Midlant, Fire Protection Engineer.

c. Final Testing: Notify the Contracting Officer in writing when the system is ready for final acceptance testing. Submit request for test at least 15 calendar days prior to the test date. The tests shall be performed in accordance with the approved test procedures in the presence of the Contracting Officer. Furnish instruments and personnel required for the tests. A final acceptance test will not be scheduled until the operation and maintenance (O&M) manuals are furnished to the Contracting Officer and the following are provided at the project site:

(1) The systems manufacturer's technical representative

(2) As-built (red-lined) drawings of the system as actually installed

(3) Megger test results

(4) Loop resistance test results

(5) Complete program printout including input/output addresses

The final tests shall be witnessed by the NAVFAC MIDLANT Fire Protection Engineer. At this time, any and all required tests shall be repeated at their discretion. Following acceptance of the system, as-built drawings and O&M manuals shall be delivered to the Contracting Officer for review and acceptance.

3.5.3 Minimum System Tests

Test the system in accordance with the procedures outlined in NFPA 72, ISO 7240-16, IEC 60268-16. The required tests are as follows:

Demonstrate communications with the supervising station as specified by the Contracting Officer. As a minimum, verify all points are correctly received at the supervising station receiver and automated software system.

Demonstrate communications with the base wide mass notification system as specified by the Contracting Officer.

a. Megger Tests: After wiring has been installed, and prior to making any connections to panels or devices, wiring shall be megger tested for insulation resistance, grounds, and/or shorts. Conductors with 300 volt rated insulation shall be tested at a minimum of 250 VDC.

Conductors with 600 volt rated insulation shall be tested at a minimum of 500 VDC. The tests shall be witnessed by the Contracting Officer and test results recorded for use at the final acceptance test.

b. Loop Resistance Tests: Measure and record the resistance of each circuit with each pair of conductors in the circuit short-circuited at the farthest point from the circuit origin. The tests shall be witnessed by the Contracting Officer and test results recorded for use at the final acceptance test.

c. Verify the absence of unwanted voltages between circuit conductors and ground. The tests shall be accomplished at the preliminary test with results available at the final system test.

d. Verify that the control unit is in the normal condition as detailed in the manufacturer's O&M manual.

e. Test each initiating and indicating device and circuit for proper operation and response at the control unit. Smoke detectors shall be tested in accordance with manufacturer's recommended calibrated test method. Use of magnets is prohibited. Testing of duct smoke detectors shall comply with the requirements of NFPA 72.

f. Test the system for specified functions in accordance with the contract drawings and specifications and the manufacturer's O&M manual.

g. Test both primary power and secondary power. Verify, by test, the secondary power system is capable of operating the system for the time period and in the manner specified.

h. Determine that the system is operable under trouble conditions as specified.

i. Visually inspect wiring.

j. Test the battery charger and batteries.

k. Verify that software control and data files have been entered or programmed into the FACU. Hard copy records of the software shall be provided to the Contracting Officer.

l. Verify that red-line drawings are accurate.

m. Measure the current in circuits to ensure there is the calculated spare capacity for the circuits.

n. Measure voltage readings for circuits to ensure that voltage drop is not excessive.

o. Disconnect the verification feature for smoke detectors during tests to minimize the amount of smoke needed to activate the detector. Testing of smoke detectors shall be conducted using real smoke. The use of canned smoke is prohibited.

p. Measure the voltage drop at the most remote appliance (based on wire length) on each notification appliance circuit.

q. Audibility Intelligibility testing of the Voice Evacuation Notification System shall be accomplished in accordance with NFPA 72

for Voice Evacuation Systems, IEC 60268-16, and ASA S3.2.

r. Opening the circuit at not less than 10% of alarm initiating devices and notification appliances to test the wiring supervisory feature.

s. Demonstrate modem communications with remote sites as specified by the Contracting Officer. Dial in capability shall also, be demonstrated, using specified security.

t. Demonstrate fiber optic communications with remote sites as specified by the Contracting Officer. Dial in capability shall also, be demonstrated, using specified security.

3.6 INSTRUCTION OF GOVERNMENT EMPLOYEES

Provide 2 days (16 hours) of onsite instruction after final acceptance of the system. The instruction shall be given during regular working hours on such dates and times as are selected by the Contracting Officer. The instruction may be divided into two or more periods at the discretion of the Contracting Officer. The training shall allow for rescheduling for unforeseen maintenance and/or fire department responses.

3.6.1 Instructor

Include in the project the services of an instructor, who has received specific training from the manufacturer for the training of other persons regarding the inspection, testing, and maintenance of the system provided. The instructor shall train the Government employees designated by the Contracting Officer, in the care, adjustment, maintenance, and operation of the fire alarm system. Each instructor shall be thoroughly familiar with all parts of this installation. The instructor shall be trained in operating theory as well as in practical O&M work.

3.6.2 Required Instruction Time

Provide 2 days (16 hours) of onsite instruction after final acceptance of the system. The instruction shall be given during regular working hours on such dates and times as are selected by the Contracting Officer. The instruction may be divided into two or more periods at the discretion of the Contracting Officer. The training shall allow for rescheduling for unforeseen maintenance and/or fire department responses.

3.6.3 Technical Data and Computer Software

Provide, in manual format, lesson plans, operating instructions, maintenance procedures, and training data for the training courses. The operations training shall familiarize designated government personnel with proper operation of the installed system. The maintenance training course shall provide the designated government personnel adequate knowledge required to diagnose, repair, maintain, and expand functions inherent to the system.

Any proprietary equipment and proprietary software needed by qualified technicians to implement future changes to the fire alarm system shall be provided as part of this contract. Maintenance software required and provided as part of this contract shall not require any type of annual license agreement or annual cost to continue use of the software. The software that is provided will continue to operate during the entire

lifetime of the installed equipment without any additional cost to the Government.

-- End of Section --

THIS PAGE HAS BEEN INTENTIONALLY LEFT BLANK

SECTION 31 05 19

GEOTEXTILE
08/08

PART 1 GENERAL

1.1 MEASUREMENT

Measure the as-built surface area, covered by geotextile, in square yards. Allowance will be made for geotextile in anchor and/or drainage trenches but no allowance will be made for waste, overlaps, damaged materials, repairs, or materials used for the convenience of the Contractor.

1.2 PAYMENT

Geotextile installed and accepted will be paid for at the respective contract unit price in the bidding schedule. This unit price will include the cost of materials, equipment, installation, testing, and other costs associated with placement of the geotextile.

1.3 REFERENCES

The publications listed below form a part of this specification to the extent referenced. The publications are referred to within the text by the basic designation only.

AMERICAN ASSOCIATION OF STATE HIGHWAY AND TRANSPORTATION OFFICIALS (AASHTO)

AASHTO M 288	(2006; R 2011) Standard Specification for Geotextile Specification for Highway Applications

ASTM INTERNATIONAL (ASTM)

ASTM D4873	(2002; R 2009) Identification, Storage, and Handling of Geosynthetic Rolls and Samples

1.4 SUBMITTALS

Government approval is required for submittals with a "G" designation; submittals not having a "G" designation are for Contractor Quality Control approval. Submit the following in accordance with Section 01 33 00 SUBMITTAL PROCEDURES:

SD-07 Certificates

Geotextile; G

1.5 DELIVERY, STORAGE, AND HANDLING

Deliver, store, and handle geotextile in accordance with ASTM D4873.

1.5.1 Delivery

Notify the Contracting Officer a minimum of 24 hours prior to delivery and unloading of geotextile rolls packaged in an opaque, waterproof, protective plastic wrapping. The plastic wrapping shall not be removed until deployment. If quality assurance samples are collected, immediately rewrap rolls with the plastic wrapping. Geotextile or plastic wrapping damaged during storage or handling shall be repaired or replaced, as directed. Label each roll with the manufacturer's name, geotextile type, roll number, roll dimensions (length, width, gross weight), and date manufactured.

1.5.2 Storage

Protect rolls of geotextile from construction equipment, chemicals, sparks and flames, temperatures in excess of 160 degrees F, or any other environmental condition that may damage the physical properties of the geotextile. To protect geotextile from becoming saturated, either elevate rolls off the ground or place them on a sacrificial sheet of plastic in an area where water will not accumulate.

1.5.3 Handling

Handle and unload geotextile rolls with load carrying straps, a fork lift with a stinger bar, or an axial bar assembly. Rolls shall not be dragged along the ground, lifted by one end, or dropped to the ground.

PART 2 PRODUCTS

2.1 RAW MATERIALS

A minimum of 7 days prior to scheduled use, submit manufacturer's certificate of compliance stating that the geotextile meets the requirements of this section. For needle punched geotextiles, the manufacturer shall also certify that the geotextile has been continuously inspected using permanent on-line full-width metal detectors and does not contain any needles which could damage other geosynthetic layers. The certificate of compliance shall be attested to by a person having legal authority to bind the geotextile manufacturer.

2.1.1 Geotextile

Provide geotextile that complies with AASHTO M 288 Class I woven (elongation < 50 percent

PART 3 EXECUTION

3.1 INSTALLATION

3.1.1 Subgrade Preparation

The surface underlying the geotextile shall be smooth and free of ruts or protrusions which could damage the geotextile. Subgrade materials and compaction requirements shall be in an undisturbed condition.

3.1.2 Placement

Notify the Contracting Officer a minimum of 24 hours prior to installation of geotextile. Geotextile rolls which are damaged or contain imperfections shall be repaired or replaced as directed. The geotextile shall be laid

flat and smooth so that it is in direct contact with the subgrade. The geotextile shall also be free of tensile stresses, folds, and wrinkles. On slopes steeper than 10 horizontal on 1 vertical, lay the geotextile with the machine direction of the fabric parallel to the slope direction.

3.2 SEAMS

3.2.1 Overlap Seams

Continuously overlap geotextile panels a minimum of 12 inches at all longitudinal and transverse joints. Where seams must be oriented across the slope, lap the upper panel over the lower panel. If approved, sewn seams may be used instead of overlapped seams.

3.3 PROTECTION

Protect the geotextile during installation from clogging, tears, and other damage. Damaged geotextile shall be repaired or replaced as directed. Use adequate ballast (e.g. sand bags) to prevent uplift by wind. The geotextile shall not be left uncovered for more than 2 days after installation.

3.4 REPAIRS

Repair torn or damaged geotextile. Clogged areas of geotextile shall be removed. Perform repairs by placing a patch of the same type of geotextile over the damaged area. The patch shall extend a minimum of 12 inches beyond the edge of the damaged area. Patches shall be continuously fastened using approved methods. The machine direction of the patch shall be aligned with the machine direction of the geotextile being repaired. Remove and replace geotextile rolls which cannot be repaired. Repairs shall be performed at no additional cost to the Government

3.5 PENETRATIONS

Construct engineered penetrations of the geotextile by methods recommended by the geotextile manufacturer.

3.6 COVERING

Do not cover geotextile prior to inspection and approval by the Contracting Officer. Place cover soil in a manner that prevents soil from entering the geotextile overlap zone, prevents tensile stress from being mobilized in the geotextile, and prevents wrinkles from folding over onto themselves. On side slopes, soil backfill shall be placed from the bottom of the slope upward. Cover soil shall not be dropped onto the geotextile from a height greater than 3 feet. No equipment shall be operated directly on top of the geotextile without approval of the Contracting Officer. Use equipment with ground pressures less than 7 psi to place the first lift over the geotextile. A minimum of 12 inches of soil shall be maintained between full-scale construction equipment and the geotextile. Cover soil material type, compaction, and testing requirements are described in Section 31 23 00.00 20 EXCAVATION AND FILL. Equipment placing cover soil shall not stop abruptly, make sharp turns, spin their wheels, or travel at speeds exceeding 5 mph.

-- End of Section --

THIS PAGE HAS BEEN INTENTIONALLY LEFT BLANK

SECTION 31 23 00.00 20

EXCAVATION AND FILL
02/11

PART 1 GENERAL

1.1 REFERENCES

The publications listed below form a part of this specification to the extent referenced. The publications are referred to in the text by the basic designation only.

AMERICAN WATER WORKS ASSOCIATION (AWWA)

AWWA C600	(2010) Installation of Ductile-Iron Water Mains and Their Appurtenances

AMERICAN WELDING SOCIETY (AWS)

AWS D1.1/D1.1M	(2010; Errata 2011) Structural Welding Code - Steel

AMERICAN WOOD PROTECTION ASSOCIATION (AWPA)

AWPA C2	(2003) Lumber, Timber, Bridge Ties and Mine Ties - Preservative Treatment by Pressure Processes
AWPA P5	(2007) Standard for Waterborne Preservatives

ASTM INTERNATIONAL (ASTM)

ASTM A139/A139M	(2004; R 2010) Standard Specification for Electric-Fusion (ARC)-Welded Steel Pipe (NPS 4 and over)
ASTM A252	(2010) Standard Specification for Welded and Seamless Steel Pipe Piles
ASTM C136	(2006) Standard Test Method for Sieve Analysis of Fine and Coarse Aggregates
ASTM C33/C33M	(2013) Standard Specification for Concrete Aggregates
ASTM D1140	(2000; R 2006) Amount of Material in Soils Finer than the No. 200 (75-micrometer) Sieve
ASTM D1556	(2007) Density and Unit Weight of Soil in Place by the Sand-Cone Method
ASTM D1557	(2012) Standard Test Methods for Laboratory Compaction Characteristics of Soil Using Modified Effort (56,000 ft-lbf/ft3) (2700 kN-m/m3)

ASTM D2216	(2010) Laboratory Determination of Water (Moisture) Content of Soil and Rock by Mass
ASTM D2321	(2011) Standard Practice for Underground Installation of Thermoplastic Pipe for Sewers and Other Gravity-Flow Applications
ASTM D2487	(2011) Soils for Engineering Purposes (Unified Soil Classification System)
ASTM D3786/D3786M	(2013) Hydraulic Bursting Strength of Textile Fabrics-Diaphragm Bursting Strength Tester Method
ASTM D422	(1963; R 2007; E 2014) Particle-Size Analysis of Soils
ASTM D4318	(2010; E 2014) Liquid Limit, Plastic Limit, and Plasticity Index of Soils
ASTM D4355	(2007) Deterioration of Geotextiles from Exposure to Light, Moisture and Heat in a Xenon-Arc Type Apparatus
ASTM D4491	(1999a; R 2014; E 2014) Water Permeability of Geotextiles by Permittivity
ASTM D4533	(2011) Trapezoid Tearing Strength of Geotextiles
ASTM D4632/D4632M	(2008; E 2013; R 2013) Grab Breaking Load and Elongation of Geotextiles
ASTM D4751	(2012) Determining Apparent Opening Size of a Geotextile
ASTM D4759	(2011) Determining the Specification Conformance of Geosynthetics
ASTM D4833/D4833M	(2007; E 2013; R 2013) Index Puncture Resistance of Geotextiles, Geomembranes, and Related Products
ASTM D6938	(2010) Standard Test Method for In-Place Density and Water Content of Soil and Soil-Aggregate by Nuclear Methods (Shallow Depth)
ASTM D698	(2012; E 2014) Laboratory Compaction Characteristics of Soil Using Standard Effort (12,400 ft-lbf/cu. ft. (600 kN-m/cu. m.))

NORTH CAROLINA DEPARTMENT OF TRANSPORTATION (NCDOT)

NCDOT RS	(2012) Standard Specifications for Road and Structures

U.S. ARMY CORPS OF ENGINEERS (USACE)

EM 385-1-1 (2014) Safety and Health Requirements Manual

1.2 DEFINITIONS

1.2.1 Capillary Water Barrier

A layer of clean, poorly graded crushed rock, stone, or natural sand or gravel having a high porosity which is placed beneath a building slab with or without a vapor barrier to cut off the capillary flow of pore water to the area immediately below a slab.

1.2.2 Degree of Compaction

Degree of compaction is expressed as a percentage of the maximum density obtained by the test procedure presented in ASTM D698, for general soil types, abbreviated as percent laboratory maximum density.

1.2.3 Structural Fill

Imported material used to raise site grades under pavements and structures.

1.2.4 Satisfactory Material

Material available onsite or imported, which is used to raise site grades in areas that will not support pavements and/or structures.

1.3 SUBMITTALS

Government approval is required for submittals with a "G" designation; submittals not having a "G" designation are for Contractor Quality Control approval. The following shall be submitted in accordance with Section 01 33 00 SUBMITTAL PROCEDURES:

SD-01 Preconstruction Submittals

Structural Fill; G

Shoring and Sheeting Plan

Dewatering work plan

Submit 15 days prior to starting work.

SD-06 Test Reports

Borrow Site Testing; G

Fill and backfill test

Select material test

Porous fill test for capillary water barrier

Density tests

Moisture Content Tests

Surcharge Monitoring; G

Copies of all laboratory and field test reports within 24 hours of the completion of the test.

1.4 DELIVERY, STORAGE, AND HANDLING

Perform in a manner to prevent contamination or segregation of materials.

1.5 CRITERIA FOR BIDDING

Base bids on the following criteria:

a. Surface elevations are as indicated.

b. The near surface soils contain high amounts of fines perched groundwater may be encountered during excavations and cause yielding of the subgrade during proofrolling. Undercutting or reworking of the near surface soils may be necessary. See paragraph Proofrolling for additional information.

c. Ground water elevations indicated by the boring logs were those existing at the time subsurface investigations were made and do not necessarily represent ground water elevation at the time of construction. Perched groundwater conditions at or very near the existing ground surface will be encountered.

d. Material character is indicated by the boring logs shown on the project plan sheets.

e. Contractor shall install and execute a surcharge and consolidation project as outline on Sheet B-200.

f. Suitable backfill and bedding material in the quantities required is not available at the project site.

g. Blasting will not be permitted. Remove material in an approved manner.

1.6 REQUIREMENTS FOR OFF SITE SOIL

Soils brought in from off site for use as backfill shall be tested for TPH, BTEX and full TCLP including ignitability, corrosivity and reactivity. Backfill shall contain less than 100 parts per million (ppm) of total petroleum hydrocarbons (TPH) and less than 10 ppm of the sum of Benzene, Toluene, Ethyl Benzene, and Xylene (BTEX) and shall not fail the TCLP test. TPH concentrations shall be determined by using EPA 600/4-79/020 Method 418.1. BTEX concentrations shall be determined by using EPA 530/F-93/004 Method 5030/8020. TCLP shall be performed in accordance with EPA 530/F-93/004 Method 1311. Provide Borrow Site Testing for TPH, BTEX and TCLP from a composite sample of material from the borrow site, with at least one test from each borrow site. TPH concentration shall contain less than 25 ppm. Material shall not be brought on site until tests have been approved by the Contracting Officer.

1.7 QUALITY ASSURANCE

1.7.1 Shoring and Sheeting Plan

Submit drawings and calculations, certified by a registered professional engineer, describing the methods for shoring and sheeting of excavations. Drawings shall include material sizes and types, arrangement of members, and the sequence and method of installation and removal. Calculations shall include data and references used.

The Contractor is required to hire a Professional Geotechnical Engineer to provide inspection of excavations and soil/groundwater conditions throughout construction. The Geotechnical Engineer shall be responsible for performing pre-construction and periodic site visits throughout construction to assess site conditions. The Geotechnical Engineer shall update the excavation, sheeting and dewatering plans as construction progresses to reflect changing conditions and shall submit an updated plan if necessary. A written report shall be submitted, at least monthly, informing the Contractor and Contracting Officer of the status of the plan and an accounting of the Contractor's adherence to the plan addressing any present or potential problems. The Geotechnical Engineer shall be available to meet with the Contracting Officer at any time throughout the contract duration.

1.7.2 Dewatering Work Plan

Submit procedures for accomplishing dewatering work.

1.7.3 Existing Utilities

Movement of construction machinery and equipment over pipes and utilities during construction shall be at the Contractor's risk. Excavation made with power-driven equipment is not permitted within two feet of known Government-owned utility or subsurface construction. For work immediately adjacent to or for excavations exposing an existing utility or other buried obstruction, excavate by hand. Start hand excavation on each side of the indicated obstruction and continue until the obstruction is uncovered or until clearance for the new grade is assured. Support uncovered lines or other existing work affected by the contract excavation until approval for backfill is granted by the Contracting Officer. Report damage to utility lines or subsurface construction immediately to the Contracting Officer.

1.7.4 Earthwork Preconstruction Meeting

A preconstruction meeting shall be held at the jobsite at least 5 business days prior to the start of earthwork operations on the project. The preconstruction meeting shall be arranged by the Contractor. The purpose of this meeting is to review the requirements of this specification and the associated plans. The following individuals as a minimum will be in attendance this meeting: Contractor's Project Manager and Project Superintendent, earthwork subcontractor's Project Manager and Site Foreman, Contractor's Geotechnical Engineer and Testing Agency, NAVFAC MIDLANT Geotechnical and Civil Engineers, NAVFAC MIDLANT Construction Manager and Engineering Technician(s). The minutes of this meeeting shall be recorded by the Contractor and published via email within 48 hours to all attendees. The minutes shall be re-published within 48 hours via email pending any subsequent comments from the attendees.

PART 2 PRODUCTS

2.1 SOIL MATERIALS

2.1.1 Satisfactory Materials

Any materials classified by ASTM D2487 as GW, GP, GM, GP-GM, GW-GM, SW, SP, SM, SP-SM, SC, CL, or combination thereof that is free of debris, roots, wood, scrap material, vegetation, refuse, soft unsound particles, and frozen, deleterious, or objectionable materials and objects larger than 3". Unless specified otherwise, the maximum particle diameter shall be one-half the lift thickness at the intended location.

2.1.2 Unsatisfactory Materials

Materials which do not comply with the requirements for satisfactory materials. Unsatisfactory materials also include man-made fills, trash, refuse, or backfills from previous construction. Unsatisfactory material also includes material classified as satisfactory which contains root and other organic matter, frozen material, and stones larger than 2 inches. The Contracting Officer shall be notified of any contaminated materials.

2.1.3 Structural Fill

Any materials classified by ASTM D2487 as GW, GP, GM, GP-GM, GW-GM, SW, SP, SM, SP-SM, with a maximum ASTM D4318 liquid limit of 35, maximum ASTM D4318 plasticity index of 9, and a maximum of 20 percent by weight passing ASTM D1140, No. 200 sieves free of debris, roots, wood, scrap material, vegetation, refuse, soft unsound particles, and frozen, deleterious, or objectionable materials.

2.1.4 Expansive Soils

Soils that have a plasticity index equal to or greater than 15 when tested in accordance with ASTM D4318.

2.1.5 Nonfrost Susceptible (NFS) Material

A uniformly graded washed sand with less than 5 percent passing the No. 200 size sieve, and with not more than 3 percent by weight finer than 0.02 mm grain size.

2.1.6 Backfill and Fill Material

ASTM D2487, classification GW, GP, GM, SW, SP, SM with a maximum ASTM D4318 liquid limit of 35, maximum ASTM D4318 plasticity index of 9 , and a maximum of 20 percent by weight passing ASTM D1140, No. 200 sieve.

2.1.7 Topsoil

Provide as specified in Section 32 92 23 SODDING.

2.2 POROUS FILL FOR CAPILLARY WATER BARRIER

ASTM C33/C33M fine aggregate grading with a maximum of 5 percent by weight passing ASTM D1140, No. 200 sieve, or coarse aggregate Size 57 and conforming to the general soil material requirements specified in paragraph entitled "Satisfactory Materials."

2.3 UTILITY BEDDING MATERIAL

Except as specified otherwise in the individual piping section, provide bedding for buried piping in accordance with AWWA C600, Type 4, except as specified herein. Backfill to top of pipe shall be compacted to 95 percent of ASTM D698 maximum density. Plastic piping shall have bedding to spring line of pipe. Provide ASTM D2321 materials as follows:

a. Class I: Angular, 0.25 to 1.5 inches, graded stone, including a number of fill materials that have regional significance such as coral, slag, cinders, crushed stone, and crushed shells.

b. Class II: Coarse sands and gravels with maximum particle size of 1.5 inches, including various graded sands and gravels containing small percentages of fines, generally granular and noncohesive, either wet or dry. Soil Types GW, GP, SW, and SP are included in this class as specified in ASTM D2487.

2.4 BORROW

Obtain borrow materials required in excess of those furnished from excavations from sources outside of Government property. However, at the Contractor's discression, materials may be obtained from the Government French Creek borrow pit. The Government borrow pit is located on mainside approximatly 22 miles from the work site. If the Government borrow pit is used, the Contractor shall perform clearing, grubbing, and stripping required for providing access to suitable borrow material. Dispose of materials from clearing and grubbing operations off Government property at a permited facility. After removal of borrow material, regrade borrow pit using stockpiled soil material to contours which will blend in with adjacent topography. Maximum side slopes shall be two horizontal to one vertical. Excavation and backfilling of borrow pit shall ensure proper drainage. Complete the 3R UXO Safety Awareness Training prior to operating in the borrow pit area. Refer to UXO Safety Awareness Training in 01 57 19.00 20Temporary Environmental Controls.

2.5 BACKFILL FOR UNDERDRAINAGE SYSTEMS

Clean sand, crushed rock, or gravel meeting the following requirements:

a. Perforated or Slotted-Wall Pipe: Backfill meeting requirements of Type I material as specified in Table 1.

b. Open Joint Pipe: backfill consisting of both Type I and Type II materials as specified in Table 1.

c. Blind or French Drains: Backfill consisting of Type II material as specified in Table 1.

d. Any Type Drain Used With Filter Fabric: Clean gravel or crushed stone or gravel conforming to ASTM C33/C33M coarse aggregate grading size 57, 67, or 7.

TABLE 1

ASTM D422 Sieve Size	Type I Gradation E 11 ASTM C33/C33M Percent Passing	Type II Gradation 57 ASTM C33/C33M Percent Passing
1.5 inches	--	100
1 inch	--	90 - 100
3/8 inch	100	25 - 60
No. 4	95 - 100	5 - 40
No. 8	--	0 - 20
No. 16	45 - 80	--
No. 50	10 - 30	--
No. 100	0 - 10	--

2.6 FILTER FABRIC

Provide a pervious sheet of polyester, nylon, glass or polypropylene , ultraviolet resistant filaments woven, spun bonded, fused, or otherwise manufactured into a nonraveling fabric with uniform thickness and strength. Fabric shall have the following manufacturer certified minimum average roll properties as determined by ASTM D4759:

	Class A
a. Grab tensile strength (ASTM D4632/D4632M) machine and transversed direction	min. 180 lbs.

	Class A
b. Grab elongation (ASTM D4632/D4632M) machine and transverse direction	min. 15 percent
c. Puncture resistance (ASTM D4833/D4833M)	min. 80 lbs.
d. Mullen burst strength (ASTM D3786/D3786M)	min. 290 psi
e. Trapezoidal Tear (ASTM D4533)	min. 50 lbs.
f. Apparent Opening Size (ASTM D4751)	US Sieve 40
g. Permeability (ASTM D4491)	k fabric greater than k Soil
h. Ultraviolet Degradation (ASTM D4355)	70 percent Strength retained at 150 hours

2.7 MATERIAL FOR PIPE CASING

2.7.1 Casing Pipe

ASTM A139/A139M, Grade B, or ASTM A252, Grade 2, smooth wall pipe. Casing size shall be of the outside diameter and wall thickness as indicated. Protective coating is not required on casing pipe.

2.7.2 Wood Supports

Treated Yellow Pine or Douglas Fir, rough, structural grade. Provide wood with nonleaching water-borne pressure preservative (ACA or CCA) and treatment conforming to AWPA P5 and AWPA C2, respectively. Secure wood supports to carrier pipe with stainless steel or zinc-coated steel bands.

2.8 MATERIAL FOR RIP-RAP

Rock for erosion control rip-rap shall conform to NCDOT RS Section 1042, Class B.2.8.

2.8.1 Bedding Material

Consisting of sand, gravel, or crushed rock, well graded, with a maximum particle size of 2 inches. Material shall be composed of tough, durable particles. Fines passing the No. 200 standard sieve shall have a

plasticity index less than six.

2.9 BURIED WARNING AND IDENTIFICATION TAPE

Polyethylene plastic and metallic core or metallic-faced, acid- and alkali-resistant, polyethylene plastic warning tape manufactured specifically for warning and identification of buried utility lines. Provide tape on rolls, 3 inch minimum width, color coded as specified below for the intended utility with warning and identification imprinted in bold black letters continuously over the entire tape length. Warning and identification to read, "CAUTION, BURIED (intended service) LINE BELOW" or similar wording. Color and printing shall be permanent, unaffected by moisture or soil.

	Warning Tape Color Codes
Red:	Electric
Yellow:	Gas, Oil; Dangerous Materials
Orange:	Telephone and Other Communications
Blue:	Potable Water Systems
Green:	Sewer Systems
White:	Steam Systems
Gray:	Compressed Air
Purple:	Non Potable, Reclaimed Water, Irrigation and Slurry lines

2.9.1 Warning Tape for Metallic Piping

Acid and alkali-resistant polyethylene plastic tape conforming to the width, color, and printing requirements specified above. Minimum thickness of tape shall be 0.003 inch. Tape shall have a minimum strength of 1500 psi lengthwise, and 1250 psi crosswise, with a maximum 350 percent elongation.

2.9.2 Detectable Warning Tape for Non-Metallic Piping

Polyethylene plastic tape conforming to the width, color, and printing requirements specified above. Minimum thickness of the tape shall be 0.004 inch. Tape shall have a minimum strength of 1500 psi lengthwise and 1250 psi crosswise. Tape shall be manufactured with integral wires, foil backing, or other means of enabling detection by a metal detector when tape is buried up to 3 feet deep. Encase metallic element of the tape in a protective jacket or provide with other means of corrosion protection.

2.10 DETECTION WIRE FOR NON-METALLIC PIPING

Detection wire shall be insulated single strand, solid copper with a minimum of 12 AWG.

PART 3 EXECUTION

3.1 PROTECTION

3.1.1 Shoring and Sheeting

Provide shoring as required to accomplish the planned below grade construction activities. In addition to Section 25 A and B of EM 385-1-1, include provisions in the shoring and sheeting plan that will accomplish the following:

a. Prevent undermining of pavements, foundations and slabs.

b. Prevent slippage or movement in banks or slopes adjacent to the excavation.

c. Allow for the abandonment of shoring and sheeting materials in place in critical areas as the work is completed. In these areas, backfill the excavation to within 3 feet of the finished grade and remove the remaining exposed portion of the shoring before completing the backfill.

3.1.2 Drainage and Dewatering

Provide for the collection and disposal of surface and subsurface water encountered during construction.

3.1.2.1 Drainage

So that construction operations progress successfully, completely drain construction site during periods of construction to keep soil materials sufficiently dry. The Contractor shall establish/construct storm drainage features (ponds/basins) at the earliest stages of site development, and throughout construction grade the construction area to provide positive surface water runoff away from the construction activity and/or provide temporary ditches, dikes, swales, and other drainage features and equipment as required to maintain dry soils, prevent erosion and undermining of foundations. When unsuitable working platforms for equipment operation and unsuitable soil support for subsequent construction features develop, remove unsuitable material and provide new soil material as specified herein. It is the responsibility of the Contractor to assess the soil and ground water conditions presented by the plans and specifications and to employ necessary measures to permit construction to proceed. Excavated slopes and backfill surfaces shall be protected to prevent erosion and sloughing. Excavation shall be performed so that the site, the area immediately surrounding the site, and the area affecting operations at the site shall be continually and effectively drained.

3.1.2.2 Dewatering

Groundwater flowing toward or into excavations shall be controlled to prevent sloughing of excavation slopes and walls, boils, uplift and heave in the excavation and to eliminate interference with orderly progress of construction. French drains, sumps, ditches or trenches will not be permitted within 3 feet of the foundation of any structure, except with specific written approval, and after specific contractual provisions for restoration of the foundation area have been made. Control measures shall be taken by the time the excavation reaches the water level in order to maintain the integrity of the in situ material. While the excavation is open, the water level shall be maintained continuously, at least 2 feet

below the working level.

Operate dewatering system continuously until construction work below existing water levels is complete. Submit performance records weekly. Measure and record performance of dewatering system at same time each day by use of observation wells or piezometers installed in conjunction with the dewatering system. Relieve hydrostatic head in previous zones below subgrade elevation in layered soils to prevent uplift.

3.1.3 Underground Utilities

Location of the existing utilities indicated is approximate. The Contractor shall physically verify the location and elevation of the existing utilities indicated prior to starting construction. The Contractor shall scan the construction site with electromagnetic and sonic equipment and mark the surface of the ground where existing underground utilities are discovered.

3.1.4 Machinery and Equipment

Movement of construction machinery and equipment over pipes during construction shall be at the Contractor's risk. Repair, or remove and provide new pipe for existing or newly installed pipe that has been displaced or damaged.

The Contractor shall construct temporary haul roads as deemed necessary to protect existing subgrades and to permit site access. The Contractor will be responsible for the cost of repairing any subgrades that have deteriorated due to exposure to construction traffic.

3.2 SURFACE PREPARATION

3.2.1 Clearing and Grubbing

Unless indicated otherwise, remove trees, stumps, logs, shrubs, brush and vegetation and other items that would interfere with construction operations within the clearing limits. Remove stumps entirely. Grub out matted roots and roots over 2 inches in diameter to at least 18 inches below existing surface.

3.2.2 Stripping

Strip suitable soil from the site where excavation or grading is indicated and stockpile separately from other excavated material. Stripping shall be performed to a depth of at least 6 inches below the exiting ground surface to remove existing surficial soil material, vegitation, forest litter, and mature root structures. Stripping shall be performed to a horizontal (plan) distance of at least 5 feet beyond building and pavement areas. Material unsuitable for use as topsoil shall be used for common fill or disposed of off of Government property. Locate topsoil so that the material can be used readily for the finished grading. Where sufficient existing topsoil conforming to the material requirements is not available on site, provide borrow materials suitable for use as topsoil. Protect topsoil and keep in segregated piles until needed.

3.2.3 Unsuitable Material

Remove vegetation, debris, decayed vegetable matter, sod, mulch, and rubbish underneath paved areas or concrete slabs.

3.3 EXCAVATION

Excavate to contours, elevation, and dimensions indicated. Reuse excavated materials that meet the specified requirements for the material type required at the intended location. Keep excavations free from water. Excavate soil disturbed or weakened by Contractor's operations, soils softened or made unsuitable for subsequent construction due to exposure to weather. Excavations below indicated depths will not be permitted except to remove unsatisfactory material. Unsatisfactory material encountered below the grades shown shall be removed as directed. Refill with backfill and fill material or select material and compact to 95 percent of ASTM D698 maximum density. Unless specified otherwise, refill excavations cut below indicated depth with backfill and fill material or select material and compact to 95 percent of ASTM D698 maximum density. Satisfactory material removed below the depths indicated, without specific direction of the Contracting Officer, shall be replaced with satisfactory materials to the indicated excavation grade; except as specified for spread footings. Determination of elevations and measurements of approved overdepth excavation of unsatisfactory material below grades indicated shall be done under the direction of the Contracting Officer.

3.3.1 Structures With Spread Footings

All foundation subgrades shall be evaluated by the Contractor's geotechnical engineer prior to the placement of reinforcing steel to verify that the soils are capable of supporting the bearing capacity referenced in the project drawings. These evaluations should include hand auger borings, dynamic cone penetrometer testing, or other means deemed appropriate at the time of construction. Any unsuitable foundation subgrade soils shall be remediated as directed by the Contractor's geotechnical engineer and approved by the Contracting Officer. All foundation areas must be approved by the Contracting Officer prior to concrete placement.

3.3.2 Pipe Trenches

Excavate to the dimension indicated. Grade bottom of trenches to provide uniform support for each section of pipe after pipe bedding placement. Tamp if necessary to provide a firm pipe bed. Recesses shall be excavated to accommodate bells and joints so that pipe will be uniformly supported for the entire length. Rock, where encountered, shall be excavated to a depth of at least 6 inches below the bottom of the pipe.

3.3.3 Hard Material Excavation

Remove hard material to elevations indicated in a manner that will leave foundation material in a solid condition. Removal of hard material beyond lines and grades indicated will not be grounds for a claim for additional payment unless previously authorized by the Contracting Officer. Excavation of the material claimed as rock shall not be performed until the material has been cross sectioned by the Contractor and approved by the Contracting Officer. Common excavation shall consist of all excavation not classified as rock excavation.

3.3.4 Excavated Materials

Satisfactory excavated material required for fill or backfill shall be placed in the proper section of the permanent work required or shall be separately stockpiled if it cannot be readily placed. Satisfactory material

in excess of that required for the permanent work and all unsatisfactory material shall be disposed of as specified in Paragraph "DISPOSITION OF SURPLUS MATERIAL."

3.3.5 Final Grade of Surfaces to Support Concrete

Excavation to final grade shall not be made until just before concrete is to be placed. Only excavation methods that will leave the foundation material in a solid condition shall be used. Approximately level surfaces shall be roughened, and sloped surfaces shall be cut as indicated into rough steps or benches to provide a satisfactory bond. All surfaces shall be protected from erosion and softening resulting from ponding or flow of water.

3.4 SUBGRADE PREPARATION

Unsatisfactory material in surfaces to receive fill or in excavated areas shall be removed and replaced with satisfactory materials as directed by the Contracting Officer. The surface shall be scarified to a depth of 6 inches before the fill is started. Sloped surfaces steeper than 1 vertical to 4 horizontal shall be plowed, stepped, benched, or broken up so that the fill material will bond with the existing material. When subgrades are less than the specified density, the ground surface shall be broken up to a minimum depth of 6 inches, pulverized, and compacted to the specified density. When the subgrade is part fill and part excavation or natural ground, the excavated or natural ground portion shall be scarified to a depth of 12 inches and compacted as specified for the adjacent fill. Material shall not be placed on surfaces that are muddy, frozen, or contain frost. Compaction shall be accomplished by sheepsfoot rollers, pneumatic-tired rollers, steel-wheeled rollers, or other approved equipment well suited to the soil being compacted. Material shall be moistened or aerated as necessary to plus or minus 3 percent of optimum moisture. Minimum subgrade density shall be as specified herein.

3.4.1 Proof Rolling

Proof rolling shall be done on an exposed subgrade free of surface water (wet conditions resulting from rainfall) which would promote degradation of an otherwise acceptable subgrade. After stripping and excavation to the planned subgrade elevation, proof roll the existing subgrade of the building and pavement areas with six passes of a fully loaded dump truck , pneumatic-tired roller. Operate the proofrolling equipment in a systematic manner to ensure the number of passes over all areas, and at speeds between 2 1/2 to 3 1/2 miles per hour. When proof rolling under buildings and pavements, the subgrade shall be considered to extend 5 feet beyond the building and pavement lines, and one-half of the passes made with the roller shall be in a direction perpendicular to the other passes. Notify the Contracting Officer a minimum of 3 days prior to proof rolling. Proof rolling shall be performed in the presence of the Contracting Officer.

If yielding (rutting/pumping) of the subgrade is noted during proofrolling, the Contractor shall install a series of inter-connected shallow drainage ditches within the building pad to relieve the perched groundwater. Drainage ditches shall be a minimum of three feet deep and draining to collection sump for removal by a suction pump. Once the perched water has been removed, the subgrade shall be proofrolled again in the presence of the Contracting Officer. Drainage ditches shall be backfilled with Structural Fill after successful proofrolling. Rutting or pumping of material shall be remediated as directed by the Contractor's geotechnical

engineer and approved by the Contracting Officer.

3.5 SUBGRADE FILTER FABRIC

Place synthetic fiber filter fabric as indicated directly on prepared subgrade free of vegetation, stumps, rocks larger than 2 inches in diameter and other debris which may puncture or otherwise damage the fabric. Repair damaged fabric by placing an additional layer of fabric to cover the damaged area a minimum of 3 feet overlap in all directions. Overlap fabric at joints a minimum of 3 feet. Obtain approval of filter fabric installation before placing fill or backfill. Place fill or backfill on fabric in the direction of overlaps and compact as specified herein. Follow manufacturer's recommended installation procedures.

3.6 FILLING AND BACKFILLING

Fill and backfill to contours, elevations, and dimensions indicated. Compact each lift before placing overlaying lift.

3.6.1 Backfill and Fill Material Placement

Provide for paved areas and under concrete slabs, except where select material is provided. Place in 8 inch lifts. Do not place over wet or frozen areas. Place backfill material adjacent to structures as the structural elements are completed and accepted. Backfill against concrete only when approved. Place and compact material to avoid loading upon or against the structure.

3.6.2 Select Material Placement

Provide under porous fill of structures. Place in 8 inch lifts. Do not place over wet or frozen areas. Backfill adjacent to structures shall be placed as structural elements are completed and accepted. Backfill against concrete only when approved. Place and compact material to avoid loading upon or against structure.

3.6.3 Backfill and Fill Material Placement Over Pipes and at Walls

Backfilling shall not begin until construction below finish grade has been approved, underground utilities systems have been inspected, tested and approved, forms removed, and the excavation cleaned of trash and debris. Backfill shall be brought to indicated finish grade . Where pipe is coated or wrapped for protection against corrosion, the backfill material up to an elevation 2 feet above sewer lines and 1 foot above other utility lines shall be free from stones larger than 1 inch in any dimension. Heavy equipment for spreading and compacting backfill shall not be operated closer to foundation or retaining walls than a distance equal to the height of backfill above the top of footing; the area remaining shall be compacted in layers not more than 4 inches in compacted thickness with power-driven hand tampers suitable for the material being compacted. Backfill shall be placed carefully around pipes or tanks to avoid damage to coatings, wrappings, or tanks. Backfill shall not be placed against foundation walls prior to 7 days after completion of the walls. As far as practicable, backfill shall be brought up evenly on each side of the wall and sloped to drain away from the wall.

3.6.4 Porous Fill Placement

Provide under floor and area-way slabs on a compacted subgrade. Place in 4

inch lifts with a minimum of two passes of a hand-operated plate-type vibratory compactor.

3.6.5 Trench Backfilling

Backfill as rapidly as construction, testing, and acceptance of work permits. Place and compact backfill under structures and paved areas in 6 inch lifts to top of trench and in 6 inch lifts to one foot over pipe outside structures and paved areas.

3.7 BORROW

Where satisfactory materials are not available in sufficient quantity from required excavations, approved borrow materials shall be obtained as specified herein.

3.8 BURIED WARNING AND IDENTIFICATION TAPE

Provide buried utility lines with utility identification tape. Bury tape 12 inches below finished grade; under pavements and slabs, bury tape 6 inches below top of subgrade.

3.9 BURIED DETECTION WIRE

Bury detection wire directly above non-metallic piping at a distance not to exceed 12 inches above the top of pipe. The wire shall extend continuously and unbroken, from manhole to manhole. The ends of the wire shall terminate inside the manholes at each end of the pipe, with a minimum of 3 feet of wire, coiled, remaining accessible in each manhole. The wire shall remain insulated over it's entire length. The wire shall enter manholes between the top of the corbel and the frame, and extend up through the chimney seal between the frame and the chimney seal. For force mains, the wire shall terminate in the valve pit at the pump station end of the pipe.

3.10 COMPACTION

Determine the in-place density of fill and backfill layers per ASTM D6938. No compaction testing of existing subgrades will be required if the existing subgrade materials are found to be firm and stable during the proofrolling specified in paragraph "Proof Rolling". Subgrade materials that exhibit excessive deflection and/or rutting shall be scarified and re-compacted or remediated as directed by the Contractor's geotechnical engineer and approved by the Contracting Officer.

3.10.1 General Site

Compact underneath areas designated for vegetation and areas outside the 5 foot line of the paved area or structure to 90 percent of ASTM D698 and within ±5 percent of optimum moisture content.

3.10.2 Structures, Spread Footings, and Concrete Slabs

Compact select material to 98 percent of ASTM D698 and within ±3 percent of the optimum moisture content.

3.10.3 Adjacent Area

Compact areas within 5 feet of structures to 90 percent of ASTM D698 and within ±5 percent of the optimum moisture content.

3.10.4 Paved Areas

Compact fill and backfill materials to 95 percent of ASTM D698 and within ±3 percent of the optimum moisture content.

3.11 PIPELINE CASING UNDER PAVEMENT

Provide new smooth wall steel pipeline casing under existing pavement in a trench. Provide each new pipeline casing, where indicated and to the lengths and dimensions shown, complete and suitable for use with the new piped utility as indicated.

3.11.1 Earthwork for Pipeline Casings

Provide excavation, sheet piling, shoring, dewatering, and backfilling for pipeline casings under this section.

3.11.2 Steel Cased Pipelines

Excavate and place bedding and backfill as indicated.

3.11.2.1 Hole for Pipeline Casing

Mechanically bore holes and case through the soil with a cutting head on a continuous auger mounted inside the casing pipe. Weld lengths of pipe together in accordance with AWS D1.1/D1.1M. Do not use water or other fluids in connection with the boring operation.

3.11.2.2 Cleaning

Clean inside of the pipeline casing of dirt, weld splatters, and other foreign matter which would interfere with insertion of the piped utilities by attaching a pipe cleaning plug to the boring rig and passing it through the pipe.

3.11.2.3 Piped Utilities

Provide in casing using wood supports adjusted to obtained grades and elevations indicated.

3.11.2.4 End Seals

After installation of piped utilities in pipeline casing, provide watertight end seals at each end of pipeline casing between pipeline casing and piping utilities. Provide watertight segmented elastomeric end seals.

3.12 SPECIAL EARTHWORK REQUIREMENTS FOR SUBSURFACE DRAINS

Excavate to dimensions indicated. Provide a bedding surface of no more than one inch of Type I subdrain backfill material and place on compacted native soil as indicated. Backfill around and over the pipes after pipe installation has been approved. Place special granular filter material in 6 inch lifts and compact with mechanical, vibrating plate tampers or rammers until no further consolidation can be achieved. Compact backfill overlying the special granular filter material as specified for adjacent or overlying work.

3.12.1 Granular Backfill Without Filter Fabric

3.12.1.1 Perforated or Slotted Wall Pipe

Place granular material as pipe is laid and extend fit for a minimum of one pipe diameter on each side of and 18 inches above the top of the pipe. Place a layer of kraft paper on top of granular filter before continuing with the backfill.

3.12.1.2 Open-Joint Pipe

Place both types of granular material specified as pipe is laid forming an aggregate filter around the pipe. Provide Type II material to envelope the pipe a minimum of one-half the pipe diameter or twice the maximum aggregate size, whichever is larger, on each side and on top of the pipe. Place Type I material next to and on top of the Type II material to provide a total fill extending at least one pipe diameter on each side of and 18 inches above the top of the pipe. Place a layer of kraft paper on top of the granular filter before continuing with the backfill.

3.12.2 Granular Backfill Using Filter Fabric

3.12.2.1 Perforated or Slotted Wall Pipes

Wrap one layer of filter fabric around pipe in such a manner that longitudinal overlaps are in unperforated or unslotted quadrants of the pipe. Overlap fabric a minimum of 2 inches. Secure fabric to pipe so that backfill material does not infiltrate through overlaps. Place granular material and extend it for one pipe diameter, minimum of 6 inches on each side of and 18 inches above top of pipe. Place a layer of filter fabric on top of granular filter before continuing with backfill.

3.12.2.2 Open-Joint Pipe

Wrap one layer of filter fabric around pipe joints overlapping a minimum of 2 inches in the longitudinal direction and extending at least 6 inches on both sides of the joint. Secure fabric to pipe so that backfill material does not infiltrate through overlaps. Place granular material specified and extend it for a minimum of one pipe diameter on each side of and 18 inches above top of pipe. Place a layer of filter fabric on top of granular filter before continuing with backfill.

3.12.2.3 Blind or French Drains

Install filter cloth in trenches with smoothly graded sides and bottom, free of cavities or projecting rocks. Lay the cloth flat but not stretched and secure with anchor pins. Place filter cloth so that drain water must pass through the cloth into the specified granular filter material. Overlap ends at least of 12 inches. Place backfill on filter cloth in the direction of overlaps. Where fabric is damaged, place a new piece of filter cloth over damaged area and overlap at least of 12 inches in every direction.

3.13 RIP-RAP CONSTRUCTION

Construct rip-rap in accordance with NCDOT State Standard, in the areas indicated.

3.13.1 Preparation

Trim and dress indicated areas to conform to cross sections, lines and grades shown within a tolerance of 0.1 foot.

3.13.2 Bedding Placement

Spread filter fabric bedding material uniformly to a thickness of at least 3 inches on prepared subgrade as indicated.

3.13.3 Stone Placement

Place rock for rip-rap on prepared bedding material to produce a well graded mass with the minimum practicable percentage of voids in conformance with lines and grades indicated. Distribute larger rock fragments, with dimensions extending the full depth of the rip-rap throughout the entire mass and eliminate "pockets" of small rock fragments. Rearrange individual pieces by mechanical equipment or by hand as necessary to obtain the distribution of fragment sizes specified above.

3.13.4 Grouting

Prior to grouting, wet rip-rap surfaces. Grout rip-rap in successive longitudinal strips, approximately 10 feet in width, commencing at the lowest strip and working up the slope. Distribute grout to place of final deposit and work into place between stones with brooms, spades, trowels, or vibrating equipment. Take precautions to prevent grout from penetrating bedding layer. Protect and cure surface for a minimum of 7 days.

3.14 FINISH OPERATIONS

3.14.1 Grading

Finish grades as indicated within one-tenth of one foot. Grade areas to drain water away from structures. Maintain areas free of trash and debris. For existing grades that will remain but which were disturbed by Contractor's operations, grade as directed.

3.14.2 Topsoil and Sod

Provide as specified in Section 32 92 23 SODDING.

3.14.3 Protection of Surfaces

Protect newly backfilled, graded, and topsoiled areas from traffic, erosion, and settlements that may occur. Repair or reestablish damaged grades, elevations, or slopes.

3.15 DISPOSITION OF SURPLUS MATERIAL

No soil from construction sites shall leave Marine Corps Base Camp Lejeune or Marine Corps Air Station property, with the exception of environmental remedial activities. Any surplus soil that cannot be reused on its originating site shall be disposed to one of the following locations:

a. Areas managed by G-3/5 for reuse on training areas for various maintenance activities:

3.1 acre storage east of OP-4 on Sneads Ferry Road.

3.5 acre storage within TLZ Condor off Verona Loop Road.

b. Prior to delivering soil to these stockpile locations, the following must be conducted:

Coordinate with G-3/5, Mr. Dave Lynch or Mr. Bill Van Pelt, MCI EAST-MCB CAMLEJ at (910) 451-5772/8799, to determine capacity available at the storage locations.

All soils will be clear of deleterious organic material such as brush, stumps, roots and timber and refuse and construction debris.

Contact POCs listed above 7 to 10 days in advance to coordinate delivery of material at the storage locations.

NOTE: Soil contaminated with debris or chemicals cannot be disposed at the stockpile locations. If contaminated soils are suspected or confirmed through presence of UXO, odors, or visual staining, affected soils must be properly tested, manifested, and disposed of in accordance with RCRA regulations. Contact Base EMD, ER Program Manager, for more information.

3.16 FIELD QUALITY CONTROL

3.16.1 Surcharge Monitoring

Perform monitoring of settlement plats as required on Sheet B-200. Submit the results the following day to the Government for review.

3.16.2 Sampling

Take the number and size of samples required to perform the following tests.

3.16.3 Testing

Perform one of each of the following tests for each material used. Provide additional tests for each source change.

3.16.3.1 Fill and Backfill Material Testing

Test fill and backfill material in accordance with ASTM C136 for conformance to ASTM D2487 gradation limits; ASTM D1140 for material finer than the No. 200 sieve; ASTM D4318 for liquid limit and for plastic limit; ASTM D698 or ASTM D1557 for moisture density relations, as applicable.

3.16.3.2 Select Material Testing

Test select material in accordance with ASTM C136 for conformance to ASTM D2487 gradation limits; ASTM D1140 for material finer than the No. 200 sieve; ASTM D698 or ASTM D1557 for moisture density relations, as applicable.

3.16.3.3 Porous Fill Testing

Test porous fill in accordance with ASTM C136 for conformance to gradation specified in ASTM C33/C33M.

3.16.3.4 Density Tests

Test density in accordance with ASTM D1556, or ASTM D6938. When ASTM D6938 density tests are used, verify density test results by performing an ASTM D1556 density test at a location already ASTM D6938 tested as specified herein. Perform an ASTM D1556 density test at the start of the job, and for every 10 ASTM D6938 density tests thereafter. Test each lift at randomly selected locations every 2000 square feet of existing grade in fills for structures and concrete slabs, and every 2500 square feet for other fill areas and every 2000 square feet of subgrade in cut. Include density test results in daily report.

Bedding and backfill in trenches: One test per 50 linear feet in each lift.

3.16.3.5 Moisture Content Tests

In the stockpile, excavation or borrow areas, a minimum of two tests per day per type of material or source of materials being placed is required during stable weather conditions. During unstable weather, tests shall be made as dictated by local conditions and approved moisture content shall be tested in accordance with ASTM D2216. Include moisture content test results in daily report.

-- End of Section --

THIS PAGE HAS BEEN INTENTIONALLY LEFT BLANK

SECTION 31 31 16.00 22

SOIL TREATMENT FOR SUBTERRANEAN TERMITE CONTROL
09/14

PART 1 GENERAL

1.1 REFERENCES

The publications listed below form a part of this specification to the extent referenced. The publications are referred to within the text by the basic designation only.

U.S. ENVIRONMENTAL PROTECTION AGENCY (EPA)

7 USC Section 136	Federal Insecticide, Fungicide, and Rodenticide Act

1.2 SUBMITTALS

Government approval is required for submittals with a "G" designation; submittals not having a "G" designation are for Contractor Quality Control approval. Submit the following in accordance with Section 01 33 00 SUBMITTAL PROCEDURES:

SD-03 Product Data

Termiticide Application Plan; G
Termiticides
Foundation Exterior
Utilities and Vents
Crawl and Plenum Air Spaces
Verification of Measurement
Application Equipment
Warranty

SD-04 Samples

Termiticides

SD-06 Test Reports

Equipment Calibration and Tank Measurement
Soil Moisture
Quality Assurance

SD-07 Certificates

Qualifications

SD-11 Closeout Submittals

Field Pesticide/Herbicide Management Record Form

1.3 QUALITY ASSURANCE

Comply with 7 USC Section 136 for requirements on Contractor's licensing, certification, and record keeping. Maintain records using Field

Pesticide/Herbicide Management Record Form as required by Section 01 60 00.00 22 REQUIREMENTS FOR PESTICIDE AND HERBICIDE COORDINATION and submit copies of records to the Base Pest Management Coordinator (PMC) through the Contracting Officer within 15 days after application. Field Pesticide/Herbicide Management Record Form must be signed by the Applicator for the Contractor, and provide the requested information including target pest, type of operation, brand name and manufacturer of pesticide, formulation, concentration or rate of application used.

1.3.1 Pesticide And Herbicide Coordination

In addition to the requirements contained in this specification section, comply with the requirements contained in Section 01 60 00.00 22 REQUIREMENTS FOR PESTICIDE AND HERBICIDE COORDINATION.

1.3.2 Qualifications

For the application of pesticides, use the services of a subcontractor whose principal business is pest control. The subcontractor shall be licensed and certified in the state where the work is to be performed. Termiticide applicators shall also be certified in the U.S. Environmental Protection Agency (EPA) pesticide applicator category which includes structural pest control. Submit the qualifications and state license number of the termiticide applicator.

The Contractor shall:

a. Have personnel with a state of North Carolina certification as required by Pesticide Law of 1971 as amended.

b. Check in with insect vectors personnel prior to application of pesticide and herbicides.

c. Provide a submittal with the following information to the Contracting Officer:

   1. Quantity of pesticide used.
   2. Rate of dispersion.
   3. Percent of use.
   4. Total amount used.

1.3.3 Safety Requirements

Formulate, treat, and dispose of termiticides and their containers in accordance with label directions. Draw water for formulating only from sites designated by the Contracting Officer, and fit the filling hose with a backflow preventer meeting local plumbing codes or standards. The filling operation shall be under the direct and continuous observation of a contractor's representative to prevent overflow. Secure pesticides and related materials under lock and key when unattended. Ensure that proper protective clothing and equipment are worn and used during all phases of termiticide application. Dispose of used pesticide containers off Government property.

1.4 DELIVERY, STORAGE, AND HANDLING

1.4.1 Delivery

Deliver termiticide material to the site in the original unopened

containers bearing legible labels indicating the EPA registration number and manufacturer's registered uses. All other materials, to be used on site for the purpose of termite control, shall be delivered in new or otherwise good condition as supplied by the manufacturer or formulator.

1.4.2 Inspection

Inspect termiticides upon arrival at the job site for conformity to type and quality in accordance with paragraph TERMITICIDES. Each label shall bear evidence of registration under the Federal Insecticide, Fungicide, and Rodenticide Act (FIFRA), as amended or under appropriate regulations of the host county. Other materials shall be inspected for conformance with specified requirements. Remove unacceptable materials from the job site.

1.4.3 Storage

Store materials in designated areas and in accordance with manufacturer's labels. Termiticides and related materials shall be kept under lock and key when unattended.

1.4.4 Handling

Observe manufacturer's warnings and precautions. Termiticides shall be handled in accordance with manufacturer's labels, preventing contamination by dirt, water, and organic material. Protect termiticides from sunlight as recommended by the manufacturer.

1.5 SITE CONDITIONS

The following conditions will determine the time of application.

1.5.1 Soil Moisture

Soils to be treated shall be tested immediately before application. Test soil moisture content to a minimum depth of 3 inches. The soil moisture shall be as recommended by the termiticide manufacturer. The termiticide will not be applied when soil moisture exceeds manufacturer's recommendations because termiticides do not adhere to the soil particles in saturated soils.

1.5.2 Runoff and Wind Drift

Do not apply termiticide during or immediately following heavy rains. Applications shall not be performed when conditions may cause runoff or create an environmental hazard. Applications shall not be performed when average wind speed exceeds 10 miles per hour. The termiticide shall not be allowed to enter water systems, aquifers, or endanger humans or animals.

1.5.2.1 Vapor Barriers and Waterproof Membranes

Termiticide shall be applied prior to placement of a vapor barrier or waterproof membrane.

1.5.2.2 Utilities and Vents

Prior to application, HVAC ducts and vents located in treatment area shall be turned off and blocked to protect people and animals from termiticide. Submit written verification that utilities and vents have been located and treated as specified.

1.5.3 Placement of Concrete

Place concrete covering treated soils as soon as the termiticide has reached maximum penetration into the soil. Time for maximum penetration shall be as recommended by the manufacturer.

1.6 WARRANTY

Submit a copy of Contractor's 5-year written warranty against infestations or reinfestations by subterranean termites of the buildings or building additions constructed under this contract. Warranty shall include annual inspections of the buildings or building additions. If live subterranean termite infestation or subterranean termite damage is discovered during the warranty period, and the soil and building conditions have not been altered in the interim:

a. Retreat the soil and perform other treatment as may be necessary for elimination of subterranean termite infestation;

b. Repair damage caused by termite infestation; and

c. Reinspect the building approximately 180 days after the retreatment.

PART 2 PRODUCTS

2.1 TERMITICIDES

Submit manufacturer's label and Material Safety Data Sheet (MSDS) for termiticides proposed for use. Provide termiticides currently registered by the EPA or approved for such use by the appropriate agency of the host county. Select non-repellant termiticide for maximum effectiveness and duration after application. The selected termiticide shall be suitable for the soil and climatic conditions at the project site. Submit samples of the pesticides used in this work. The Contracting Officer may draw, at any time and without prior notice, from stocks at the job site; should analysis, performed by the Government, indicate such samples to contain less than the amount of active ingredient specified on the label, work performed with such products shall be repeated, with pesticides conforming to this specification, at no additional cost to the Government.

PART 3 EXECUTION

3.1 VERIFICATION OF MEASUREMENT

Once termiticide application has been completed, measure tank contents to determine the remaining volume. The total volume measurement of used contents for the application shall equal the established application rate for the project site conditions. Provide written verification that the volume of termiticide used meets the application rate.

3.2 TECHNICAL REPRESENTATIVE

The certified installation pest management coordinator shall be the technical representative, shall be present at all meetings concerning treatment measures for subterranean termites, and may be present during treatment application. The command Pest Control Coordinator shall be contacted prior to starting work.

3.3 SITE PREPARATION

Site preparation shall be in accordance with Sections 31 23 00.00 20 EXCAVATION AND FILL, 32 05 33 LANDSCAPE ESTABLISHMENT, 32 92 23 SODDING, and 32 93 00 EXTERIOR PLANTS. Work related to final grades, landscape plantings, foundations, or any other alterations to finished construction which might alter the condition of treated soils, shall be coordinated with this specification.

3.3.1 Ground Preparation

Food sources shall be eliminated by removing debris from clearing and grubbing and post construction wood scraps such as ground stakes, form boards, and scrap lumber from the site, before termiticide application begins.

3.3.2 Verification

Before work starts, verify that final grades are as indicated and smooth grading has been completed in accordance with Section 31 23 00.00 20 EXCAVATION AND FILL. Soil particles shall be finely graded with particles no larger than 1 inch and compacted to eliminate soil movement to the greatest degree.

3.3.3 Foundation Exterior

Provide written verification that final grading and landscape planting operations will not disturb treatment of the soil on the exterior sides of foundation walls, grade beams, and similar structures.

3.3.4 Utilities and Vents

Provide written verification that the location and identity of HVAC ducts and vents, water and sewer lines, and plumbing have been accomplished prior to the termiticide application.

3.3.5 Crawl and Plenum Air Spaces

Provide written verification that the location and identity of crawl and plenum air spaces have been accomplished prior to the termiticide application.

3.3.6 Application Plan

Submit a Termiticide Application Plan with proposed sequence of treatment work with dates and times for approval before starting the specified treatment. Include the termiticide trade name, EPA registration number, chemical composition, formulation, concentration of original and diluted material, application rate of active ingredients, method of application, area/volume treated, amount applied; and the name and state license number of the state certified applicator.

3.4 TERMITICIDE TREATMENT

3.4.1 Equipment Calibration and Tank Measurement

Submit a listing of equipment to be used. Immediately prior to commencement of termiticide application, calibration tests shall be conducted on the application equipment to be used and the application tank

shall be measured to determine the volume and contents. These tests shall confirm that the application equipment is operating within the manufacturer's specifications and will meet the specified requirements. Submit written certification of the equipment calibration test results within 1 week of testing.

3.4.2 Mixing and Application

Formulating, mixing, and application shall be performed in the presence of the Contracting Officer or the technical representative. A closed system is recommended as it prevents the termiticide from coming into contact with the applicator or other persons. Water for formulating shall only come from designated locations. Filling hoses shall be fitted with a backflow preventer meeting local plumbing codes or standards. Overflow shall be prevented during the filling operation. Prior to each day of use, the equipment used for applying termiticides shall be inspected for leaks, clogging, wear, or damage. Any repairs are to be performed immediately.

3.4.3 Treatment Method

For areas to be treated, establish complete and unbroken vertical and/or horizontal soil poison barriers between the soil and all portions of the intended structure which may allow termite access to wood and wood related products. Application shall not be made to areas which serve as crawl spaces or for use as a plenum air space.

3.4.3.1 Surface Application

Use surface application for establishing horizontal barriers. Surface applicants shall be applied as a coarse spray and provide uniform distribution over the soil surface. Termiticide shall penetrate a minimum of 1 inch into the soil, or as recommended by the manufacturer.

3.4.3.2 Rodding and Trenching

Use rodding and trenching for establishing vertical soil barriers. Trenching shall be to the depth of the foundation footing. Width of trench shall be as recommended by the manufacturer, or as indicated. Rodding or other approved method may be implemented for saturating the base of the trench with termiticide. Immediately after termiticide has reached maximum penetration as recommended by the manufacturer, backfilling of the trench shall commence. Backfilling shall be in 6 inch rises or layers. Each rise shall be treated with termiticide.

3.4.4 Sampling

The Contracting Officer may draw from stocks at the job site, at any time and without prior notice, take samples of the termiticides used to determine if the amount of active ingredient specified on the label is being applied.

3.5 CLEAN UP, DISPOSAL, AND PROTECTION

Once application has been completed, proceed with clean up and protection of the site without delay.

3.5.1 Clean Up

The site shall be cleaned of all material associated with the treatment

measures, according to label instructions, and as indicated. Excess and waste material shall be removed and disposed off site.

3.5.2 Disposal of Termiticide

Dispose of residual termiticides and containers off Government property, and in accordance with label instructions and EPA criteria.

3.5.3 Protection of Treated Area

Immediately after the application, the area shall be protected from other use by erecting barricades and providing signage as required or directed. Signage shall be in accordance with Section 10 14 01 EXTERIOR SIGNAGE. Signage shall be placed inside the entrances to crawl spaces and shall identify the space as treated with termiticide and not safe for children and animals.

3.6 CONDITIONS FOR SATISFACTORY TREATMENT

3.6.1 Equipment Calibrations and Measurements

Where results from the equipment calibration and tank measurements tests are unsatisfactory, re-treatment will be required.

3.6.2 Testing

Should an analysis, performed by a third party, indicate that the samples of the applied termiticide contain less than the amount of active ingredient specified on the label, and/or if soils are treated to a depth less than specified or approved, re-treatment will be required.

3.6.3 Disturbance of Treated Soils

Soil and fill material disturbed after treatment shall be re-treated before placement of slabs or other covering structures.

3.6.4 Termites Found Within the Warranty Period

If live subterranean termite infestation or termite damage is discovered during the warranty period, re-treat the site.

3.7 RE-TREATMENT

Where re-treatment is required, comply with the requirements specified in paragraph WARRANTY.

-- End of Section --

THIS PAGE HAS BEEN INTENTIONALLY LEFT BLANK

SECTION 32 05 33

LANDSCAPE ESTABLISHMENT
02/10

PART 1 GENERAL

1.1 REFERENCES

The publications listed below form a part of this specification to the extent referenced. The publications are referred to within the text by the basic designation only.

ASTM INTERNATIONAL (ASTM)

ASTM D2103	(2010) Standard Specification for Polyethylene Film and Sheeting
ASTM D5851	(1995; R 2011) Planning and Implementing a Water Monitoring Program

TREE CARE INDUSTRY ASSOCIATION (TCIA)

TCIA Z133.1	(2006) American National Standard for Arboricultural Operations - Pruning, Repairing, Maintaining, and Removing Trees, and Cutting Brush - Safety Requirements

U.S. GREEN BUILDING COUNCIL (USGBC)

LEED NC	(2009) Leadership in Energy and Environmental Design(tm) New Construction Rating System

1.2 DEFINITIONS

1.2.1 Pesticide

Any substance or mixture of substances, including biological control agents, that may prevent, destroy, repel, or mitigate pests and are specifically labeled for use by the U.S. Environmental Protection Agency (EPA). Also, any substance used as a plant regulator, defoliant, disinfectant, or biocide. Examples of pesticides include fumigants, herbicides, insecticides, fungicides, nematicides, molluscicides and rodenticides.

1.2.2 Stand of Turf

95 percent ground cover of the established species.

1.2.3 Planter Beds

A planter bed is defined as an area containing one or a combination of the following plant types: shrubs, vines, wildflowers, annuals, perennials, ground cover, and a mulch topdressing excluding turf. Trees may also be found in planter beds.

1.3 RELATED REQUIREMENTS

Section 32 92 23 SODDING applies to this section for installation of sod requirements, with additions and modifications herein.

Section 32 93 00 EXTERIOR PLANTS applies to this section for installation of trees, shrubs, and ground cover with additions and modifications herein.

1.4 SUBMITTALS

Government approval is required for submittals with a "G" designation; submittals not having a "G" designation are for Contractor Quality Control approval. The following shall be submitted in accordance with Section 01 33 00 SUBMITTAL PROCEDURES:

SD-01 Preconstruction Submittals

Integrated Pest Management Plan

SD-03 Product Data

Local/Regional Materials; (LEED NC)

Submit documentation indicating distance between manufacturing facility and the project site. Indicate distance of raw material origin from the project site. Indicate relative dollar value of local/regional materials to total dollar value of products included in project.

Fertilizer
Plant Quantities
Hose; (LEED NC)
Mulches Topdressing; (LEED NC)

Submit documentation indicating percentage of post-industrial and post-consumer recycled content per unit of product. Indicate relative dollar value of recycled content products to total dollar value of products included in project.

Organic Mulch Materials

Submit documentation indicating type of biobased material in product and biobased content. Indicate relative dollar value of biobased content products to total dollar value of products included in project.

SD-07 Certificates

Maintenance inspection report

SD-10 Operation and Maintenance Data

Maintenance

SD-11 Closeout Submittals

Tree, staking and guying removal

1.5 DELIVERY, STORAGE AND HANDLING

1.5.1 Delivery

Deliver fertilizer to the site in original containers bearing manufacturer's chemical analysis, name, trade name, or trademark, and indication of conformance to state and federal laws. Instead of containers, fertilizer may be furnished in bulk with a certificate indicating the above information.

1.5.2 Storage

1.5.2.1 Fertilizer, Lime, Iron, Mulch Storage

Material shall be stored in designated areas. Lime and fertilizer shall be stored in cool, dry locations away from contaminants.

1.5.2.2 Antidessicants Storage

Do not store with fertilizers or other landscape maintenance materials.

1.5.3 Handling

Do not drop or dump materials from vehicles.

1.6 SUSTAINABLE DESIGN REQUIREMENTS

1.6.1 Local/Regional Materials

Use materials or products extracted, harvested, or recovered, as well as manufactured, within a 500 mile radius from the project site, if available from a minimum of three sources.

1.7 MAINTENANCE

Submit Operation and Maintenance (O&M) Manuals for planting materials. Include instructions indicating procedures during one typical year including variations of maintenance for climatic conditions throughout the year. Provide instructions and procedures for watering; promotion of growth, including fertilizing, pruning, and mowing; and integrated pest management. O&M Manuals shall include pictures of planting materials cross referenced to botanical and common names, with a description of the normal appearance in each season.

Develop a water monitoring program for surface and ground water on the project site in accordance with ASTM D5851 and consistent with the water management program utilized during construction operations.

PART 2 PRODUCTS

2.1 POST-PLANT FERTILIZER

Fertilizer for groundcover, wildflowers, and grasses is not permitted. Fertilizer for trees, plants, and shrubs shall be as recommended by plant supplier, except synthetic chemical fertilizers are not permitted. Fertilizers containing petrochemical additives or that have been treated with pesticides or herbicides are not permitted.

2.1.1 Granular Fertilizer

Organic, granular controlled release fertilizer containing the following minimum percentages, by weight, of plant food nutrients:

10 percent available nitrogen
10 percent available phosphorus
10 percent available potassium

2.2 WATER

Source of water shall be approved by the Contracting Officer, and be of suitable quality for irrigation. Use collected storm water or graywater when available.

2.2.1 Hose

Hoses used for watering shall be a minimum of suitable quality for irrigation.

2.3 MULCHES TOPDRESSING

Free from noxious weeds, mold, pesticides, or other deleterious materials.

2.3.1 Inert Mulch Materials (Gravel/Rock)

Ranging in size as indicated in the Drawings and Section 32 93 00 EXTERIOR PLANTS. Provide materials from site and construction waste to the greatest extent possible.

2.3.2 Organic Mulch Materials

Shredded hardwood from site when available. Biobased content shall be a minimum of 100 percent. Wood cellulose fiber shall be processed to contain no growth or germination-inhibiting factors, dyed with non-toxic, biodegradable dye to an appropriate color to facilitate visual metering of materials application.

2.3.3 Recycled Organic Mulch

Recycled mulch may include compost, tree trimmings, or pine needles with a gradation that passes through a 2-1/2 by 2-1/2 inch screen. It shall be cleaned of all sticks a minimum 1 inch in diameter and plastic materials a minimum 3 inch length. The material shall be treated to retard the growth of mold and fungi.

2.4 PESTICIDES

Pesticides and herbicides are not permitted. Use black sheet polyethylene conforming to ASTM D2103, minimum thickness 5/32 inch. Submit an Integrated Pest Management Plan, including weed and pest management strategies. Use biological pest controls as approved in the Plan.

PART 3 EXECUTION

3.1 EXTENT OF WORK

Provide landscape construction maintenance to include mowing, edging, overseeding, aeration, fertilizing, watering, weeding, pruning, stake and

guy adjusting, and picking up trash for all newly installed landscape areas unless indicated otherwise, and at all areas inside or outside the limits of the construction that are disturbed by the Contractor's operations.

3.1.1 Policing

The Contractor shall police all landscaped areas. Policing includes removal of leaves, branches and limbs regardless of length or diameter, dead vegetation, paper, trash, cigarette butts, garbage, rocks or other debris. Policing shall extend to both sides of fencing or walls. Collected debris shall be promptly removed and disposed of at an approved disposal site.

3.1.2 Drainage System Maintenance

The Contractor shall remove all obstructions from surface and subsurface drain lines to allow water to flow unrestricted in swales, catch basins, storm drain curb inlets, and yard drains. Remove grates and clear debris in catch basins. Open drainage channels are to be maintained free of all debris and vegetation at all times. Edges of these channels shall be clear of any encroachment by vegetation.

3.2 GROUNDCOVER ESTABLISHMENT PERIOD

Groundcover establishment period will commence on the date that inspection by the Contracting Officer shows that the new turf furnished under this contract has been satisfactorily installed to a 100 percent stand of coverage. The establishment period shall continue for a period of 365 days.

3.2.1 Frequency of Maintenance

Begin maintenance immediately after turf has been installed. Inspect areas once a week during the installation and establishment period and perform needed maintenance promptly.

3.2.2 Promotion of Growth

Groundcover shall be maintained in a manner that promotes proper health, growth, natural color.Turf shall have a neat uniform manicured appearance, free of bare areas, ruts, holes, weeds, pests, dead vegetation, debris, and unwanted vegetation that present an unsightly appearance. Mow, remove excess clippings, eradicate weeds, water, fertilize, aerate, topdress and perform other operations necessary to promote growth, as approved by Contracting Officer and consistent with approved Integrated Pest Management Plan. Remove noxious weeds common to the area from planting areas by mechanical means.

3.2.3 Mowing

3.2.3.1 Turf

Turf shall be mowed at a uniform finished height. Mow turfed areas to a minimum average height of 3 inches when average height of grass becomes 3 inches for spring/summer maintenance and to a minimum average height of 3 inches when the average height of grass reaches 3 inches for fall maintenance. The height of turf is measured from the soil. Mowing of turf shall be performed in a manner that prevents scalping, rutting, bruising, uneven and rough cutting. Prior to mowing, all rubbish, debris, trash, leaves, rocks, paper, and limbs or branches on a turf area shall be picked

up and disposed. Adjacent paved areas shall be swept/vacuumed clean.

3.2.4 Turf Edging and Trimming

Perimeter of planter bed edges, sidewalks, driveways, curbs, and other paved surfaces shall be edged. Uniformly edge these areas to prevent encroachment of vegetation onto paved surfaces and to provide a clear cut division line between planter beds, turf, and ground cover. Edging is to be accomplished in a manner that prevents scalping, rutting, bruising, uneven and rough cutting. Edging shall be performed on the same day that turf is mowed. Use of string line trimmers is permitted in "soft" areas such as an edge between turfgrass and a planter bed. Care shall be exercised to avoid damage to any plant materials, structures, and other landscape features.

Trimming around trees, fences, poles, walls, and other similar objects is to be accomplished to match the height and appearance of surrounding mowed turf growth. Trimming shall be performed on the same day the turf's mowed. Care shall be exercised to avoid "Girdling" trees located in turf areas. The use of protective tree collars on trees in turf areas may be utilized as a temporary means to avoid injury to tree trunks. At the end of the plant establishment period Contractor will be responsible for removing all protective tree collars.

3.2.5 Post-Fertilizer Application

Do not fertilize wildflowers, groundcover, and grasses. Apply turf fertilizer in a manner that promotes health, growth, vigor, color and appearance of cultivated turf areas. The method of application, fertilizer type and frequencies shall be determined by the laboratory soil analysis results the requirements of the particular turf species. Fertilizer shall be applied by approved methods in accordance with the manufacturer's recommendations.

3.2.6 Turf Watering

The Contractor shall perform watering in a manner that promotes the health, growth, color and appearance of cultivated vegetation and that complies with all Federal, State, and local water agencies and authorities directives. The Contractor shall be responsible to prevent over watering, water run-off, erosion, and ponding due to excessive quantities or rate of application. The Contractor shall abide by state, local or other water conservation regulations or restrictions in force during the establishment period.

3.2.7 Turf Clearance Area

Trees located in turf areas shall be maintained with a growth free clearance of 24 inches from the tree trunk base. The use of mechanical weed whips to accomplish the turf growth free bed area is prohibited.

3.2.8 Replanting

Replant in accordance with Section 32 92 23 SODDING and within specified planting dates areas which do not have a satisfactory stand of turf. Replant areas which do not have a satisfactory stand of other groundcover and grasses.

3.2.9 Final Inspection and Acceptance

Final inspection will be make upon written request from the Contractor at least 10 days prior to the last day of the turf establishment period. Final turf acceptance will be based upon a satisfactory stand of turf. Final acceptance of wildflower and grass areas will be based upon a stand of 95 percent groundcover of established species.

3.2.10 Unsatisfactory Work

When work is found to not meet design intent and specifications, maintenance period will be extended at no additional cost to the Government until work has been completed, inspected and accepted by Contracting Officer.

3.3 EXTERIOR PLANT ESTABLISHMENT PERIOD

The exterior plant establishment period will commence on the date that inspection by the Contracting Officer shows that the new plants furnished under this contract have been satisfactorily installed and shall continue for a period of 365 days.

3.3.1 Frequency of Maintenance

Begin maintenance immediately after plants have been installed. Inspect exterior plants at least once a week during the installation and establishment period and perform needed maintenance promptly.

3.3.2 Promotion of Plant Growth and Vigor

Water, prune, fertilize, mulch, adjust stakes, guys and turnbuckles, eradicate weeds and perform other operations necessary to promote plant growth, and vigor.

3.3.3 Planter Bed Maintenance

Planter beds shall be weeded, fertilized, irrigated, kept pest free, turf free, pruned, and mulch levels maintained. Planter beds will not be allowed to encroach into turf areas. A definite break shall be maintained between turf areas and planter beds. Fertilize exterior planting materials to promote healthy plant growth without encouraging excessive top foliar growth. Remove noxious weeds common to the area from planting areas by mechanical means.

3.3.3.1 Shrub Selective Maintenance

In addition to the above requirements, shrubs shall be selectively pruned, and shaped for health and safety when the following conditions exist: Remove growth in front of windows, over entrance ways or walks, and any growth which will obstruct vision at street intersections or of security personnel; Remove dead, damaged or diseased branches or limbs; where shrub growth obstructs pedestrian walkways; where shrub growth is found growing against or over structures; where shrub growth permits concealment of unauthorized persons. All pruning debris shall be disposed of in a proper manner.

3.3.3.2 Tree Maintenance

Tree maintenance shall include adjustment of stakes, ties, guy supports and

turnbuckles, watering, fertilizing, pest control, mulching, pruning for health and safety. Fertilize exterior trees to promote healthy plant growth without encouraging excessive top foliar growth. Stakes, ties, guy supports and turnbuckles shall be inspected and adjusted to avoid girdling and promote natural development. All trees within the project boundaries, regardless of caliper, shall be selectively pruned for safety and health reasons. These include but are not limited to removal of dead and broken branches and correction of structural defects. Prune trees according to their natural growth characteristics leaving trees well shaped and balanced. Pruning of all trees including palm trees shall be accomplished by or in the presence of a certified member of the International Society of Arboriculture and in accordance with TCIA Z133.1. All pruning debris generated shall be disposed of in a proper manner.

3.3.4 Slope Erosion Control Maintenance

The Contractor shall provide slope erosion control maintenance to prevent undermining of all slopes in newly landscaped. Maintenance tasks include immediate repairs to weak spots in sloped areas, and maintaining clean, clear culverts, and graded berms, and terraces to intercept and direct water flow to prevent development of large gullies and slope erosion. Eroded areas shall be filled with amended topsoil and replanted with the same plant species. Erosion control netting damaged due to slope erosion shall be reinstalled.

3.3.5 Removal of Dying or Dead Plants

Remove dead and dying plants and provide new plants immediately upon commencement of the specified planting season, and replace stakes, guys, mulch and eroded earth mound water basins. No additional plant establishment period will be required for replacement plants beyond the original warranty period. A tree shall be considered dying or dead when the main leader has died back, or a minimum of 20 percent of the crown has died. A shrub or ground cover shall be considered dying or dead when a minimum of 20 percent of the plant has died. This condition shall be determined by scraping on a branch an area 1/16 inch square, maximum, to determine the cause for dying plant material and shall provide recommendations for replacement. The Contractor shall determine the cause for dying plant material and provide recommendations for replacement.

3.3.6 Tracking of Unhealthy Plants

Note plants not in healthy growing condition, as determined by the Contracting Officer, and as soon as seasonal conditions permit, remove and replace with plants of the same species and sizes as originally specified. Install replacement plantings in accordance with Section 32 93 00 EXTERIOR PLANTS.

3.3.7 Final Inspection

Final inspection will be made upon written request from the Contractor at least 10 days prior to the last day of the establishment period. Final inspection will be based upon satisfactory health and growth of plants and on the following:

3.3.7.1 Total Plants on Site

Plants have been accepted and required number of replacements have been installed.

3.3.7.2 Mulching and Weeding

Planter beds and earth mound water basins are properly mulched and free of weeds.

3.3.7.3 Tree Supports

Stakes, guys and turnbuckles are in good condition.

3.3.7.4 Remedial Work

Remedial measures directed by the Contracting Officer to ensure plant material survival and promote healthy growth have been completed.

3.3.8 Unsatisfactory Work

When work is found to not meet design intent and specifications, maintenance period will be extended at no additional cost to the Government until work has been completed, inspected and accepted by Contracting Officer.

3.4 FIELD QUALITY CONTROL

3.4.1 Maintenance Inspection Report

Provide maintenance inspection report to assure that landscape maintenance is being performed in accordance with the specifications and in the best interest of plant growth and survivability. Site observations shall be documented at the start of the establishment period, then quarterly following the start, and at the end of establishment period. Results of site observation visits shall be submitted to the Contracting Officer within 7 calendar days of each site observation visit.

3.4.2 Plant Quantities

The Contractor shall provide Contracting Officer with the number of plant quantities. In addition, provide total exterior area of hardscape and landscaping such as turf and total number of shrubs.

3.4.3 Tree Staking and Guying Removal

The Contractor shall provide a certified letter that all stakes and guys are removed from all project trees at the end of the establishment period.

-- End of Section --

THIS PAGE HAS BEEN INTENTIONALLY LEFT BLANK

SECTION 32 10 00

BITUMINOUS CONCRETE PAVEMENT
08/08

PART 1 GENERAL

1.1 REFERENCES

The publications listed below form a part of this specification to the extent referenced. The publications are referred to within the text by the basic designation only.

AMERICAN ASSOCIATION OF STATE HIGHWAY AND TRANSPORTATION OFFICIALS (AASHTO)

AASHTO T 230	(1968; R 2000) Determining Degree of Pavement Compaction of Bituminous Aggregate Mixtures

ASTM INTERNATIONAL (ASTM)

ASTM D2950/D2950M	(2014) Density of Bituminous Concrete in Place by Nuclear Methods

NORTH CAROLINA DEPARTMENT OF TRANSPORTATION (NCDOT)

NCDOT RS	(2012) Standard Specifications for Road and Structures

U.S. GREEN BUILDING COUNCIL (USGBC)

LEED NC	(2009) Leadership in Energy and Environmental Design(tm) New Construction Rating System

1.2 SUBMITTALS

Government approval is required for submittals with a "G" designation; submittals not having a "G" designation are for Contractor Quality Control approval. Submittals with an "S" are for inclusion in the Sustainability Notebook, in conformance to Section 01 33 29 SUSTAINABILITY REPORTING. Submit the following in accordance with Section 01 33 00 SUBMITTAL PROCEDURES:

SD-03 Product Data

Precast car stops; (LEED NC)
Asphalt cement; (LEED NC)

Submit documentation indicating percentage of post-industrial and post-consumer recycled content per unit of product. Indicate relative dollar value of recycled content products to total dollar value of products included in project.

Local/Regional Materials; (LEED NC)

Submit documentation indicating distance between manufacturing

facility and the project site. Indicate distance of raw material origin from the project site. Indicate relative dollar value of local/regional materials to total dollar value of products included in project.

Albedo; (LEED NC)

Provide information identifying the reflectance of the pavement.

SD-04 Samples

Pavement cores

SD-06 Test Reports

Trial batch reports

Mix design

Asphalt concrete

Density

Thickness

Straightedge test

Submit reports for testing specified under paragraph entitled "Field Quality Control."

SD-07 Certificates

Asphalt mix delivery record

Asphalt concrete and material sources

Obtain approval of the Contracting Officer for materials and material sources 2 days prior to the use of such material in the work.

Asphalt concrete

Curbs

Guard (Guide) rails

Median barriers

Traffic signs

Submit certificates, signed by the producer, that paving materials and incidental construction items conform to specification requirements.

1.3 QUALITY ASSURANCE

1.3.1 Regulatory Requirements

Provide work and materials in accordance with applicable requirements of

SHS NCDOT RS. Divisions and Sections mentioned herein refer to those specifications. Paragraphs in SHS NCDOT RS entitled Measurement and Payment shall not apply.

1.3.2 Modification of References

Where term "Engineer" is used in SHS NCDOT RS it shall be construed to mean Contracting Officer.

1.3.3 Mix Delivery Record Data

Record and submit the following information to each load of mix delivered to the job site. Submit within one day after delivery on Government-furnished forms:

a. Truck No:

b. Time In:

c. Time Out:

d. Tonnage and Discharge Temperature:

e. Mix Type:

f. Location:

g. Stations Placed:

1.3.4 Trial Batch

Submit current bituminous design reports for all mix types proposed for use on the project.

1.3.5 Mix Design

Submit results of laboratory tests performed on each mix design. Testing shall have been accomplished not more than one year prior to date of material placement.

1.4 ENVIRONMENTAL REQUIREMENTS

Do not produce or place bituminous concrete when the weather is rainy or foggy, when the base course is frozen or has excess moisture, or when the ambient temperature is less than 40 degrees F in the shade away from artificial heat.

1.5 SUSTAINABLE DESIGN REQUIREMENTS

1.5.1 Local/Regional Materials

Use materials or products extracted, harvested, or recovered, as well as manufactured, within a 500 mileradius from the project site, if available from a minimum of three sources.

PART 2 PRODUCTS

2.1 ASPHALT CONCRETE

Provide asphalt concrete in accordance with the applicable requirements of the SHS NCDOT RS, except where specified otherwise. Recycled asphalt pavement material may be used as permitted by SHS NCDOT RS.

2.1.1 Albedo

Installed system shall have a minimum solar reflectance of 0.3.

2.2 SUBBASE

SHS NCDOT RS, materials for construction of the subbase shall be in accordance with Division 10, Sections 1005 and 1008.

2.3 BASE COURSE

SHS NCDOT RS, materials for construction of the base course shall be in accordance with Sections 1005, 1008 and 1010. Submit product data for Asphalt cement.

2.4 SURFACE COURSE

SHS NCDOT RS, materials for construction of the surface course shall be in accordance with Division 10, Section 1020. Submit product data for Asphalt cement.

2.5 STRIPING

SHS NCDOT RS, materials for paint striping shall be in accordance with Division 10, Section 1080.

2.6 CURBS AND GUTTERS

SHS NCDOT RS, materials for construction of curbs and gutters shall be in accordance with Division 10.

2.7 GUARD (GUIDE) RAILS

SHS NCDOT RS, materials for construction of the guard (guide) rails shall be in accordance with Division 10, Section 1046.

2.8 MEDIAN BARRIERS

SHS NCDOT RS, materials for construction of the median barriers shall be in accordance with Division 10.

2.9 TRAFFIC SIGNS

SHS NCDOT RS, provide traffic signs in accordance with Division 10, Sections 1092 and 1094.

2.10 PRECAST CAR STOPS

Provide car stops to the profile and size indicated.

PART 3 EXECUTION

3.1 PREPARATION

3.1.1 Excavation and Filling

Excavation and filling to establish elevation of subgrade is specified in Section 31 23 00.00 20 EXCAVATION AND FILL.

3.2 CONSTRUCTION

Provide construction in accordance with the applicable requirements of the SHS NCDOT RS, except where indicated or specified otherwise.

3.2.1 Subgrade

SHS NCDOT RS, preparation of subgrade shall be in accordance with Section 31 23 00.00 20 EXCAVATION AND FILL. Verify compacted subgrade, granular base, or stabilized soil is acceptable and ready to support paving and imposed loads.

3.2.2 Subbase

SHS NCDOT RS, methods of construction of the subbase shall be in accordance with Division 5, Section 520.

3.2.3 Base Course

SHS NCDOT RS, methods of construction of the base course shall be in accordance with Division 5, Section 520.

3.2.4 Surface Course

SHS NCDOT RS, methods of construction of the surface course shall be in accordance with Division 6, Section 610. Placement will not be permitted unless the Contractor has a working asphalt thermometer on site. Install surface elevation of the pervious paving system 1/8 to 1/4 inch above adjacent drainage inlets, concrete collars, or channels.

3.2.5 Striping

SHS NCDOT RS, provide paint striping in accordance with Division 12, Section 1205. Allow bituminous pavement to cure for at least 21 days before paint is applied. Pavement shall be thoroughly clean and entirely free of loose sand, stones, dust, oil, grease, water, and other substances that will be deleterious to the paint or will adversely affect the adhesion of the paint. Do not apply paint during high wind (over 15 miles per hour) or high humidity (over 70 percent). Apply paint only when ambient temperature is 40 degrees F or above and rising but not more than 95 degrees F. Dimensions and arrangement of striping shall be as indicated. Apply paint to a wet film thickness of 0.015 inch by means of conventional traffic line striping equipment. Traffic shall not be permitted to use the painted areas for a minimum of 30 minutes after painting of lines has been completed.

3.2.6 Curbs

SHS NCDOT RS, methods of construction of curbs and gutters shall be in accordance with Division 8, Section 846.

3.2.7 Guard (Guide) Rails

SHS NCDOT RS, methods of construction of the guard (guide) rails shall be in accordance with Division 8, Section 862.

3.2.8 Median Barrier

SHS NCDOT RS, methods of construction of the median barriers shall be in accordance with Division 8, Section 852 .

3.2.9 Traffic Signs

SHS NCDOT RS, install traffic signs in accordance with Division 9.

3.2.10 Precast Car Stops

Provide car stops where indicated. Install with an anchor rod driven through each sleeve.

3.3 FIELD QUALITY CONTROL

Sample shall be taken by Contractor as specified herein. Contractor shall replace pavement where sample cores have been removed. Submit 2 pavement cores when using the in-place nuclear density method.

3.3.1 Sample and Core Identification

Place each sample and core in a container and securely seal to prevent loss of material. Tag each sample for identification. Tag shall contain the following information:

a. Contract No.

b. Sample No.

c. Quantity

d. Date of Sample

e. Sample Description

f. Source/Location/Stations Placed/depth below the finish grade

g. Intended Use

h. Thicknesses of various lifts placed

3.3.2 Testing

3.3.2.1 Testing of Pavement Course

a. Density: Determine density of pavement by testing cores obtained from the binder and wearing course in accordance with AASHTO T 230. Take three cores at location designated by Contracting Officer for each 200 tons, or fraction thereof, of asphalt placed. Deliver cores undisturbed and undamaged to laboratory and provide test results within 48 hours of each day placement of paving materials.

b. Thickness: Determine thickness of the binder and wearing course from cores taken for density test.

c. Straightedge Test: Test compacted surface of binder course and wearing course with a straightedge as work progresses. Apply straightedge parallel with and at right angles to center line after final rolling. Variations in the binder course surface shall not be more than 1/4 inches from the lower edge of the 10 foot straightedge; variations in wearing course surface shall not be more than 1/4 from the lower edge of the 10 foot straightedge. Pavement showing irregularities greater than that specified shall be corrected as directed by Contracting Officer.

3.3.2.2 Alternate Testing Method for Pavement Courses

At Contractor's option the following in-place testing method may be used to determine density and thickness in lieu of testing specified above. Frequency of testing shall be the same. When in-place nuclear method to determine density is used, take two pavement cores at locations designated by Contracting Officer and turn over to Government to verify pavement thickness.

a. Density: Determine density of pavement by in-place testing using Nuclear Method in accordance with ASTM D2950/D2950M.

b. Thickness: Determine thickness of finished pavement by use of following equation:

$$t = \frac{W}{0.75d}$$

Where t= pavement thickness, in inches.
W= average weight per square yard of mixture actually used in work.
d= compacted density as measured by nuclear density device.

3.4 WASTE MANAGEMENT

Protect excess material from contamination and return to manufacturer, or reuse on-site for walkways, patching, ditch beds, speed bumps, or curbs.

-- End of Section --

THIS PAGE HAS BEEN INTENTIONALLY LEFT BLANK

SECTION 32 13 13.06

PORTLAND CEMENT CONCRETE PAVEMENT FOR ROADS AND SITE FACILITIES
11/11

PART 1 GENERAL

1.1 REFERENCES

The publications listed below form a part of this specification to the extent referenced. The publications are referred to within the text by the basic designation only.

AMERICAN CONCRETE INSTITUTE INTERNATIONAL (ACI)

ACI 211.1	(1991; R 2009) Standard Practice for Selecting Proportions for Normal, Heavyweight and Mass Concrete
ACI 301	(2010; Errata 2011) Specifications for Structural Concrete
ACI 305.1	(2006) Specification for Hot Weather Concreting
ACI 306.1	(1990; R 2002) Standard Specification for Cold Weather Concreting
ACI 325.12R	(2002) Guide for Design of Jointed Concrete Pavements for Streets and Local Roads
ACI 330R	(2008) Guide for the Design and Construction of Concrete Parking Lots

AMERICAN WATER WORKS ASSOCIATION (AWWA)

AWWA C215	(2010) Extruded Polyolefin Coatings for the Exterior of Steel Water Pipelines

ASTM INTERNATIONAL (ASTM)

ASTM A184/A184M	(2006; E2011) Standard Specification for Fabricated Deformed Steel Bar Mats for Concrete Reinforcement
ASTM A615/A615M	(2014) Standard Specification for Deformed and Plain Carbon-Steel Bars for Concrete Reinforcement
ASTM A966/A966M	(2008; R 2012) Standard Test Method for Magnetic Particle Examination of Steel Forgings Using Alternating Current
ASTM C1077	(2014) Standard Practice for Laboratories Testing Concrete and Concrete Aggregates for Use in Construction and Criteria for Laboratory Evaluation

ASTM C1157/C1157M	(2011) Standard Specification for Hydraulic Cement
ASTM C1260	(2007) Standard Test Method for Potential Alkali Reactivity of Aggregates (Mortar-Bar Method)
ASTM C143/C143M	(2012) Standard Test Method for Slump of Hydraulic-Cement Concrete
ASTM C150/C150M	(2012) Standard Specification for Portland Cement
ASTM C1549	(2009) Standard Test Method for Determination of Solar Reflectance Near Ambient Temperature Using a Portable Solar Reflectometer
ASTM C1567	(2013) Standard Test Method for Potential Alkali-Silica Reactivity of Combinations of Cementitious Materials and Aggregate (Accelerated Mortar-Bar Method)
ASTM C1602/C1602M	(2012) Standard Specification for Mixing Water Used in Production of Hydraulic Cement Concrete
ASTM C171	(2007) Standard Specification for Sheet Materials for Curing Concrete
ASTM C172/C172M	(2010) Standard Practice for Sampling Freshly Mixed Concrete
ASTM C231/C231M	(2010) Standard Test Method for Air Content of Freshly Mixed Concrete by the Pressure Method
ASTM C260/C260M	(2010a) Standard Specification for Air-Entraining Admixtures for Concrete
ASTM C309	(2011) Standard Specification for Liquid Membrane-Forming Compounds for Curing Concrete
ASTM C31/C31M	(2012) Standard Practice for Making and Curing Concrete Test Specimens in the Field
ASTM C33/C33M	(2013) Standard Specification for Concrete Aggregates
ASTM C494/C494M	(2013) Standard Specification for Chemical Admixtures for Concrete
ASTM C595/C595M	(2013) Standard Specification for Blended Hydraulic Cements
ASTM C618	(2012a) Standard Specification for Coal Fly Ash and Raw or Calcined Natural

	Pozzolan for Use in Concrete
ASTM C78/C78M	(2012; E 2013) Standard Test Method for Flexural Strength of Concrete (Using Simple Beam with Third-Point Loading)
ASTM C94/C94M	(2014b) Standard Specification for Ready-Mixed Concrete
ASTM C989/C989M	(2013) Standard Specification for Slag Cement for Use in Concrete and Mortars
ASTM D1751	(2004; E 2013; R 2013) Standard Specification for Preformed Expansion Joint Filler for Concrete Paving and Structural Construction (Nonextruding and Resilient Bituminous Types)

U.S. DEPARTMENT OF DEFENSE (DOD)

UFC 3-250-01FA	(2004) Pavement Design for Roads, Streets, Walks, and Open Storage Areas

1.2 DESIGN

This materials and construction specification is intended to be used on projects where the design was completed using UFC 3-250-01FA Pavement Design for Roads, Streets, Walks, and Open Storage Areas, ACI 330R, Guide for the Design and Construction of Concrete Parking Lots or ACI 325.12R, Guide for Design of Jointed Concrete Pavements for Streets and Local Roads, or equivalent.

1.3 SUBMITTALS

Government approval is required for submittals with a "G" designation; submittals not having a "G" designation are for Contractor Quality Control approval. The following shall be submitted in accordance with Section 01 33 00 SUBMITTAL PROCEDURES:

SD-03 Product Data; G

Curing materials

Admixtures

Dowel

Reinforcement

Submit a complete list of materials including type, brand and applicable reference specifications.

Cementitious Materials; (LEED)

Aggregate; (LEED)

Submit documentation indicating percentage of post-industrial and post-consumer recycled content per unit of product. Indicate relative dollar value of recycled content products to total dollar

value of products included in project.

Local/Regional Materials; (LEED)

Submit documentation indicating distance between manufacturing facility and the project site. Indicate distance of raw material origin from the project site. Indicate relative dollar value of local/regional materials to total dollar value of products included in project.

Albedo; (LEED)

Provide information identifying the reflectance of the pavement.

SD-04 Samples

Field-Constructed Mockup

SD-05 Design Data; G

Concrete mix design

Thirty days minimum prior to concrete placement, submit a mix design, with applicable tests, for each strength and type of concrete for approval. Submit a complete list of materials including type; brand; source and amount of cement, fly ash, slag, and admixtures; and applicable reference specifications. Provide mix proportion data using at least three different water-cement ratios for each type of mixture, which will produce a range of strength encompassing those required for each class and type of concrete required. Submittal shall clearly indicate where each mix design will be used when more than one mix design is submitted. Obtain acknowledgement of approvals prior to concrete placement. Submit a new mix design for each material source change.

SD-06 Test Reports; G

Aggregate tests

Concrete slump tests

Air content tests

Flexural strength tests

Cementitious materials

SD-07 Certificates; G

Ready-mixed concrete plant

Batch tickets

Cementitious materials

SD-11 Closeout Submittals; G

Cementitious Materials; (LEED)

Albedo; (LEED)

LEED documentation relative to heat island effect - non-roof credit in accordance with LEED Reference Guide. Include in LEED Documentation Notebook.

1.4 DELIVERY, STORAGE, AND HANDLING

ASTM C94/C94M.

1.5 QUALITY ASSURANCE

1.5.1 Ready-mixed Concrete Plant Certification

Unless otherwise approved by the Contracting Officer, ready mixed concrete shall be produced and provided by a National Ready-Mix Concrete Association (NRMCA) certified plant. If a volumetric mobile mixer is used to produce the concrete, rather than ready-mixed concrete, the mixer(s) must conform to the standards of the Volumetric Mixer Manufacturers Bureau (VMMB). Verification shall be made by a current VMMB conformance plate affixed to the volumetric mixer equipment.

1.5.2 Contractor Qualifications

Unless waived by the Contracting Officer, the Contractor shall meet one of the following criteria:

a. Contractor shall have at least one National Ready Mixed Concrete Association (NMRCA) certified concrete craftsman and at least one American Concrete Institute (ACI) Flatwork Finisher Certified craftsman on site, overseeing each placement crew during all concrete placement.

b. Contractor shall have no less than three NRMCA certified concrete installersand at least two American Concrete Institute (ACI) Flatwork Finisher Certified installers, who shall be on site working as members of each placement crew during all concrete placement.

1.5.3 Required Information

Submit copies of laboratory test reports showing that the mix has been successfully tested to produce concrete with the properties specified and that mix will be suitable for the job conditions. The laboratory test reports shall include mill test and all other test for cementitious materials, aggregates, and admixtures. Provide maximum nominal aggregate size, combined aggregate gradation analysis, percentage retained and passing sieve, and a graph of percentage retained verses sieve size. Test reports shall be submitted along with the concrete mix design. Sampling and testing of materials, concrete mix design, sampling and testing in the field shall be performed by a commercial testing laboratory which conforms to ASTM C1077. The laboratory shall be approved in writing by the Government.

1.5.4 Batch Tickets

ASTM C94/C94M. Submit mandatory batch ticket information for each load of ready-mixed concrete.

1.5.5 Field-Constructed Mockup

Install a minimum 400 square feet to demonstrate typical joints, surface finish, texture, color, thickness, and standard of workmanship. Test panels shall be placed using the mixture proportions, materials, and equipment as proposed for the project. Test mock up panels in accordance with requirements in FIELD QUALITY CONTROL.

When a test panel is does not meet one or more of the requirements, the test panel shall be rejected, removed, and replaced at the Contractor's expense. If the test panels are acceptable, they may be incorporated into the project with the approval of the Contracting Officer.

1.6 SUSTAINABLE DESIGN REQUIREMENTS

1.6.1 Local/Regional Materials

Use materials or products extracted, harvested, or recovered, as well as manufactured, within a 500 mile radius from the project site, if available from a minimum of three sources.

PART 2 PRODUCTS

2.1 MATERIALS

2.1.1 Cementitious Materials

Cementitious materials in concrete mix shall be 20 to 50 percent non-portland cement pozzolanic materials or slag by weight. Provide test data demonstrating compatibility and performance of concrete satisfactory to Contracting Officer.

2.1.1.1 Cement

ASTM C150/C150M, Type I or II or ASTM C595/C595M, Type IS, IP, or P or ASTM C1157/C1157M.

2.1.1.2 Fly Ash and Pozzolan

ASTM C618, Type F, or N. Fly ash certificates shall include test results in accordance with ASTM C618.

2.1.1.3 Ultra Fine Fly Ash and Ultra Fine Pozzolan

Ultra Fine Fly Ash (UFFA) and Ultra Fine Pozzolan (UFP) shall conform to ASTM C618, Class F or N, and the following additional requirements:

a. The strength activity index at 28 days of age shall be at least 95 percent of the control specimens.

b. The average particle size shall not exceed 6 microns.

2.1.1.4 Slag

ASTM C989/C989M, Slag Cement (formerly Ground Granulated Blast Furnace Slag) Grade 100 or 120. Certificates shall include test results in accordance with ASTM C989/C989M.

2.1.1.5 Supplementary Cementitious Materials (SCM) Content

The concrete mix shall always contain one of the SCMs listed in Table 1 within the range specified therein, whether or not the aggregates are found to be reactive in accordance with the paragraph entitled, "Alkali Silica Reactivity".

TABLE 1
SUPPLEMENTARY CEMENTITIOUS MATERIALS CONTENT

Supplementary Cementitious Material	Minimum Content (percent)	Maximum Content (percent)
Class N Pozzolan and Class F Fly Ash		
$SiO_2 + Al_2O_3 + Fe_2O_3 > 70$ percent	25	35
$SiO_2 + A1_2O_3 + Fe_2O_3 > 80$ percent	20	35
$SiO_2 + A1_2O_3 + Fe_2O_3 > 90$ percent	15	35
UFFA and UFP	7	16
GGBF Slag	40	50

2.1.2 Water

Water shall conform to ASTM C1602/C1602M. Hot water shall not be used unless approved by the Contracting Officer.

2.1.3 Aggregate

Coarse aggregate shall consist of crushed or uncrushed gravel, crushed stone, or a combination thereof. Aggregates, as delivered to the mixers, shall consist of clean, hard, uncoated particles. Coarse aggregate shall be washed. Washing shall be sufficient to remove dust and other coatings. Fine aggregate shall consist of natural sand, manufactured sand, or a combination of the two, and shall be composed of clean, hard, durable particles. Both coarse and fine aggregates shall meet the requirements of ASTM C33/C33M.

2.1.3.1 Alkali Reactivity Test

Aggregates to be used in all concrete in projects over 50,000 SF in size shall be evaluated and tested by the Contractor for alkali-aggregate reactivity in accordance with ASTM C1260. The types of aggregates shall be evaluated in a combination which matches the contractors' proposed mix design (including Class F fly ash or GGBF slag), utilizing ASTM C1567. Test results of the combination shall have a measured expansion of less than 0.08 percent at 28 days. Should the test data indicate an expansion of greater than 0.08%, the aggregate(s) shall be rejected and the contractor shall submit new aggregate sources for retesting or may submit additional test results incorporating Lithium Nitrate for consideration.

ASTM C1567 shall be performed as follows to include one of the following options:

a. Utilize the contractor's proposed low alkali Portland cement and Class F fly ash in combination for the test proportioning. The laboratory shall use the contractor's proposed percentage of cement and fly ash.

b. Utilize the contractor's proposed low alkali Portland cement and ground granulated blast furnace (GGBF) slag in combination for the test proportioning. The laboratory shall use the contractor's proposed percentage of cement and GGBF.

c. Utilize the contractor's proposed low alkali Portland cement and Class F fly ash and ground granulated blast furnace (GGBF) slag in combination for the test proportioning. The laboratory shall use the contractor's proposed percentage of cement, fly ash and GGBF.

2.1.3.2 Fine Aggregates

ASTM C33/C33M.

2.1.3.3 Coarse Aggregates

ASTM C33/C33M.

2.1.4 Admixtures

ASTM C494/C494M: Type A, water reducing; Type B, retarding; Type C, accelerating; Type D, water-reducing and retarding; and Type E, water-reducing and accelerating admixture. Do not use calcium chloride admixtures. Where not shown or specified, the use of admixtures is subject to written approval of the Contracting Officer.

ASTM C260/C260M: Air-entraining.

2.1.5 Reinforcement

2.1.5.1 Dowel Bars

Bars shall conform to ASTM A615/A615M, Grade 60 for plain billet-steel bars of the size and length indicated. Remove all burrs and projections from the bars.

2.1.5.2 Coated Dowel Bars

Bars shall conform to ASTM A615/A615M, Grade 60 for plain billet-steel bars of the size and length indicated. Remove all burrs or projections from the dowel bars. Coating system shall conform to AWWA C215, Type 2. Coat the bars with a double coat system or an epoxy coating system for resistance to penetration of oil and salt solutions. The systems shall be in accordance with manufacturer's recommendation for coatings which are not bondable to concrete. Bond the coating to the dowel bar to resist laps or folds during movement of the joint. Coating thickness shall be 7 mils minimum and 20 mils maximum.

2.1.5.3 Tie Bars

Bars shall be billet or axle steel deformed bars and conform to ASTM A615/A615M or ASTM A966/A966M Grade 60.

2.1.5.4 Reinforcement

Deformed steel bar mats shall conform to ASTM A184/A184M. Bar reinforcement shall conform to ASTM A615/A615M , Grade 60.

2.1.6 Curing Materials

2.1.6.1 White-Burlap-Polyethylene Sheet

ASTM C171, 0.004 inch thick white opaque polyethylene bonded to 10 oz/linear yard (40 inch) wide burlap.

2.1.6.2 Liquid Membrane-Forming Compound

ASTM C309, white pigmented, Type 2, Class B, free of paraffin or petroleum.

2.1.6.3 Liquid Chemical Sealer-Hardener Compound

Compound shall be magnesium fluosilicate which when mixed with water seals and hardens the surface of the concrete. Do not use on exterior slabs exposed to freezing conditions. Compound shall not reduce the adhesion of resilient flooring, tile, paint, roofing, waterproofing, or other material applied to concrete.

2.1.7 Joint Fillers and Sealants

Expansion joint filler shall be a preformed material conforming to ASTM D1751. Expansion joint filler shall be 1/2 inch thick.

2.2 CONCRETE PAVEMENT

2.2.1 Joint Layout Drawings

If jointing requirements on the project drawings are not compatible with the contractor's placement sequence, the contractor shall submit a joint layout plan shop drawing to the Contracting Officer for approval. No work shall be allowed to start until the joint layout plan is approved. The joint layout plan shall indicate and describe in the detail the proposed jointing plan for contraction joints, expansion joints, and construction joints, in accordance with the following:

a. Indicate locations of contraction joints, construction joints, and expansion joints. Spacing between contraction joints shall not exceed 15 feet unless noted otherwise or approved by the Contracting Officer.

b. The larger dimension of a panel shall not be greater than 125% of the smaller dimension.

c. The minimum angle between two intersecting joints shall be 80 degrees, unless noted otherwise or approved by the Contracting Officer.

d. Joints shall intersect pavement-free edges at a 90 degree angle the pavement edge and shall extend straight for a minimum of 1.5 feet from the pavement edge, where possible.

e. Align joints of adjacent panels.

f. Align joints in attached curbs with joints in pavement when possible.

g. Ensure joint depth, widths, and dimensions are specified.

h. Minimum contraction joint depth shall be 1/4 of the pavement thickness. The minimum joint width shall be 1/8 inch.

i. Use expansion joints only where pavement abuts buildings, foundations, manholes, and other fixed objects.

2.2.2 Albedo

Installed system shall have a minimum solar reflectance of 0.3. per ASTM C1549. Installed system must meet the requirements of LEED heat island effect non-roof credit.

2.3 CONTRACTOR-FURNISHED MIX DESIGN

Contractor-furnished mix design concrete shall be designed in accordance with ACI 211.1 except as modified herein, and the mix design shall be as specified herein under paragraph entitled "Submittals." The concrete shall have a minimum flexural strength of 4500 pounds per square inch at 28 days. The concrete may be air entrained. If air entrainment is used the air content shall be 6.0. Maximum size aggregate for slip forming shall be 1.5 inches. The slump shall be 1 to 3 inches (or less when slip form is used). For slipformed pavement, at the start of the project, select a maximum allowable slump which will produce in-place pavement meeting the specified tolerances for control of edge slump. The selected slump shall be applicable to both pilot and fill-in lanes.

If the cementitious material is not sufficient to produce concrete of the flexural strength required it shall be increased as necessary, without additional compensation under the contract. The cementitious factor shall be calculated using cement, Class F fly ash, and or GGBF slag. The mix shall use a SCM material by weightper Table 1 in "Supplementary Cementitious Materials (SCM) Content"

PART 3 EXECUTION

3.1 FORMS

3.1.1 Construction

Construct forms to be removable without damaging the concrete.

3.1.2 Coating

Before placing the concrete, coat the contact surfaces of forms except existing pavement sections where bonding is required, with a non-staining mineral oil, non-staining form coating compound, or two coats of nitro-cellulose lacquer. When using existing pavement as a form, clean existing concrete and then coat with asphalt emulsion bondbreaker before concrete is placed.

3.1.3 Grade and Alignment

Check and correct grade elevations and alignment of the forms immediately before placing the concrete.

3.2 REINFORCEMENT

3.2.1 Dowel Bars

Install bars accurately aligned, vertically and horizontally, at indicated locations and to the dimensions and tolerances indicated. Before installation thoroughly grease the sliding portion of each dowel. Dowels must remain in position during concrete placement and curing.

3.2.2 Coated Dowel Bars

Install bars, accurately aligned vertically and horizontally, at indicated locations and to the dimensions and tolerances indicated. Reject coatings which are perforated, cracked or otherwise damaged. While handling avoid scuffing or gouging of the coatings.

3.2.3 Tie Bars

Install bars, accurately aligned horizontally and vertically, at indicated locations. For slipform construction, insert bent tie bars by hand or other approved means.

3.2.4 Setting Slab Reinforcement

Reinforcement shall be positioned on suitable chairs prior to concrete placement. At expansion, contraction and construction joints, place the reinforcement as indicated. Reinforcement, when placed in concrete, shall be free of mud, oil, scale or other foreign materials. Place reinforcement accurately and wire securely. The laps at splices shall be 12 inches minimum and the distances from ends and sides of slabs and joints shall be as indicated.

3.3 MEASURING, MIXING, CONVEYING, AND PLACING CONCRETE

3.3.1 Measuring

ASTM C94/C94M.

3.3.2 Mixing

ASTM C94/C94M, except as modified herein. Begin mixing within 30 minutes after cement has been added to aggregates. When the air temperature is greater than 85 degrees F, place concrete within 60 minutes. With the approval of the Contracting Officer, a hydration stabilizer admixture meeting the requirements of ASTM C494/C494M Type D, may be used to extend the placement time to 90 minutes. Additional water may be added to bring slump within required limits as specified in Section 11.7 of ASTM C94/C94M, provided that the specified water-cement ratio is not exceeded.

3.3.3 Conveying

ASTM C94/C94M.

3.3.4 Placing

Follow guidance of ACI 301, except as modified herein. Do not exceed a free vertical drop of 5 feet from the point of discharge. Deposit concrete either directly from the transporting equipment or by conveyor on to the pre-wetted subgrade or subbase, unless otherwise specified. Do not place

concrete on frozen subgrade or subbase. Deposit the concrete between the forms to an approximately uniform height. Place concrete continuously at a uniform rate, with minimum amount of segregation, without damage to the grade and without unscheduled stops except for equipment failure or other emergencies. If this occurs within 10 feet of a previously placed expansion joint, remove concrete back to joint, repair any damage to grade, install a construction joint and continue placing concrete only after cause of the stop has been corrected.

3.3.5 Vibration

Immediately after spreading concrete, consolidate concrete with internal type vibrating equipment along the boundaries of all slabs regardless of slab thickness, and interior of all concrete slabs 6 inches or more in thickness. Limit duration of vibration to that necessary to produce consolidation of concrete. Excessive vibration will not be permitted. Vibrators shall not be operated in concrete at one location for more than 15 seconds. At the option of the Contractor, vibrating equipment of a type approved by the Contracting Officer may be used to consolidate concrete in unreinforced pavement slabs less than 6 inches thick.

3.3.5.1 Vibrating Equipment

Operate equipment, except hand-manipulated equipment, ahead of the finishing machine. Select the number of vibrating units and power of each unit to properly consolidate the concrete. Mount units on a frame that is capable of vertical movement and, when necessary, radial movement, so vibrators may be operated at any desired depth within the slab or be completely withdrawn from the concrete. Clear distance between frame-mounted vibrating units that have spuds that extend into the slab at intervals across the paving lane shall not exceed 30 inches. Distance between end of vibrating tube and side form shall not exceed 2 inches. For pavements less than 10 inches thick, operate vibrators at mid-depth parallel with or at a slight angle to the subbase. For thicker pavements, angle vibrators toward the vertical, with vibrator tip preferably about 2 inches from subbase, and top of vibrator a few inches below pavement surface. Vibrators may be pneumatic, gas driven, or electric, and shall be operated at frequencies within the concrete of not less than 8,000 vibrations per minute. Amplitude of vibration shall be such that noticeable vibrations occur at 1.5 foot radius when the vibrator is inserted in the concrete to the depth specified.

3.3.6 Cold Weather

Except with authorization, do not place concrete when ambient temperature is below 40 degrees F or when concrete is likely to be subjected to freezing temperatures within 24 hours. When authorized, when concrete is likely to be subjected to freezing within 24 hours after placing, heat concrete materials so that temperature of concrete when deposited is between 65 and 80 degrees F. Methods of heating materials are subject to approval of the Contracting Officer. Do not heat mixing water above 165 degrees F. Remove lumps of frozen material and ice from aggregates before placing aggregates in mixer. Follow practices found in ACI 306.1.

3.3.7 Hot Weather

Maintain required concrete temperature in accordance with Figure NRMCA NOMOGRAPH FOR ESTIMATING EVAPORATION RATE ON THE BASIS OF MENZEL FORMULA in ACI 305.1 to prevent evaporation rate from exceeding 0.2 pound of water per

square foot of exposed concrete per hour. Cool ingredients before mixing or use other suitable means to control concrete temperature and prevent rapid drying of newly placed concrete. After placement, use fog spray, apply monomolecular film, or use other suitable means to reduce the evaporation rate. Start curing when surface of fresh concrete is sufficiently hard to permit curing without damage. Cool underlying material by sprinkling lightly with water before placing concrete. Follow practices found in ACI 305.1.

3.4 PAVING

Pavement shall be constructed with paving and finishing equipment utilizing fixed forms slipforms.

3.4.1 Consolidation

The paver vibrators shall be inserted into the concrete not closer to the underlying material than 2 inches. The vibrators or any tamping units in front of the paver shall be automatically controlled so that they shall be stopped immediately as forward motion ceases. Excessive vibration shall not be permitted. Concrete in small, odd-shaped slabs or in locations inaccessible to the paver mounted vibration equipment shall be vibrated with a hand-operated immersion vibrator. Vibrators shall not be used to transport or spread the concrete.

3.4.2 Operation

When the paver is operated between or adjacent to previously constructed pavement (fill-in lanes), provisions shall be made to prevent damage to the previously constructed pavement, including keeping the existing pavement surface free of any debris, and placing rubber mats beneath the paver tracks. Transversely oscillating screeds and extrusion plates shall overlap the existing pavement the minimum possible, but in no case more than 8 inches.

3.4.3 Required Results

The paver-finisher shall be operated to produce a thoroughly consolidated slab throughout, true to line and grade within specified tolerances. The paver-finishing operation shall produce a surface finish free of irregularities, tears, voids of any kind, and any other discontinuities. It shall produce only a very minimum of paste at the surface. Multiple passes of the paver-finisher shall not be permitted. The equipment and its operation shall produce a finished surface requiring no hand finishing, other than the use of cutting straightedges, except in very infrequent instances. No water, other than true fog sprays (mist), shall be applied to the concrete surface during paving and finishing.

3.4.4 Fixed Form Paving

Forms shall be steel, except that wood forms may be used for curves having a radius of 150 feet or less, and for fillets. Forms may be built up with metal or wood, added only to the base, to provide an increase in depth of not more than 25 percent. The base width of the form shall be not less than eight-tenths of the vertical height of the form, except that forms 8 inches or less in vertical height shall have a base width not less than the vertical height of the form. Wood forms for curves and fillets shall be adequate in strength and rigidly braced. Forms shall be set on firm material cut true to grade so that each form section when placed will be

firmly in contact with the underlying layer for its entire base. Forms shall not be set on blocks or on built-up spots of underlying material. Forms shall remain in place at least 12 hours after the concrete has been placed. Forms shall be removed without injuring the concrete.

3.4.5 Slipform Paving

The slipform paver shall shape the concrete to the specified and indicated cross section in one pass, and shall finish the surface and edges so that only a very minimum amount of hand finishing is required. Dowels shall not be installed by dowel inserters attached to the paver or by any other means of inserting the dowels into the plastic concrete. If a keyway is required, a 26 gauge thick metal keyway liner shall be installed as the keyway is extruded.

3.4.6 Placing Reinforcing Steel

Reinforcement shall be positioned on suitable chairs securely fastened to the subgrade prior to concrete placement. If reinforcing for Continuously Reinforced Concrete Pavement (CRCP) is required, the entire operating procedure and equipment proposed shall be submitted for approval at least 30 days prior to proposed start of paving.

3.4.7 Placing Dowels and Tie Bars

Dowels shall be installed with alignment not greater than 1/8 inch per ft. Except as otherwise specified below, location of dowels shall be within a horizontal tolerance of plus or minus 5/8 inch and a vertical tolerance of plus or minus 3/16 inch. The portion of each dowel intended to move within the concrete or expansion cap shall be painted with one coat of rust inhibiting primer paint, and then oiled just prior to placement. Dowels and tie bars in joints shall be omitted when the center of the dowel tie bar is located within a horizontal distance from an intersecting joint equal to or less than one-fourth of the slab thickness.

3.4.7.1 Contraction Joints

Dowels and tie bars in longitudinal and transverse contraction joints within the paving lane shall be held securely in place by means of rigid metal basket assemblies. The dowels and tie bars shall be welded to the assembly or held firmly by mechanical locking arrangements that will prevent them from becoming distorted during paving operations. The basket assemblies shall be held securely in the proper location by means of suitable anchors.

3.4.7.2 Construction Joints-Fixed Form Paving

Installation of dowels and tie bars shall be by the bonded-in-place method, supported by means of devices fastened to the forms. Installation by removing and replacing in preformed holes will not be permitted.

3.4.7.3 Dowels Installed in Hardened Concrete

Installation shall be by bonding the dowels into holes drilled into the hardened concrete. Holes approximately 1/8 inch greater in diameter than the dowels shall be drilled into the hardened concrete. Dowels shall be bonded in the drilled holes using epoxy resin injected at the back of the hole before installing the dowel and extruded to the collar during insertion of the dowel so as to completely fill the void around the dowel.

Application by buttering the dowel shall not be permitted. The dowels shall be held in alignment at the collar of the hole, after insertion and before the grout hardens, by means of a suitable metal or plastic collar fitted around the dowel. The vertical alignment of the dowels shall be checked by placing the straightedge on the surface of the pavement over the top of the dowel and measuring the vertical distance between the straightedge and the beginning and ending point of the exposed part of the dowel. Where tie bars are required in longitudinal construction joints of slipform pavement, bent tie bars shall be installed at the paver, in front of the transverse screed or extrusion plate. If tie bars are required, a standard keyway shall be constructed, and the bent tie bars shall be inserted into the plastic concrete through a 26 gauge thick metal keyway liner. Tie bars shall not be installed in preformed holes. The keyway liner shall be protected and shall remain in place and become part of the joint. Before placement of the adjoining paving lane, the tie bars shall be straightened, without spalling the concrete around the bar.

3.4.7.4 Expansion Joints

Dowels in expansion joints shall be installed by the bonded-in-place method or by bonding into holes drilled in hardened concrete, using procedures specified above.

3.5 FINISHING CONCRETE

Start finishing operations immediately after placement of concrete. Use finishing machine, except hand finishing may be used in emergencies and for concrete slabs in inaccessible locations or of such shapes or sizes that machine finishing is impracticable. Finish pavement surface on both sides of a joint to the same grade. Finish formed joints from a securely supported transverse bridge. Provide hand finishing equipment for use at all times. Transverse and longitudinal surface tolerances shall be 1/4 inch in 10 feet.

3.5.1 Side Form Finishing

Strike off and screed concrete to the required crown slope and cross-section by a power-driven transverse finishing machine. Transverse rotating tube or pipe shall not be permitted unless approved by the Contracting Officer. Elevation of concrete shall be such that, when consolidated and finished, pavement surface will be adequately consolidated and at the required grade. Equip finishing machine with two screeds which are readily and accurately adjustable for changes in pavement crown slope and compensation for wear and other causes. Make as many passes over each area of pavement and at such intervals as necessary to give proper compaction, retention of coarse aggregate near the finished surface, and a surface of uniform texture, true to grade and crown slope. Do not permit excessive operation over an area, which will result in an excess of mortar and water being brought to the surface.

3.5.1.1 Equipment Operation

Maintain the travel of machine on the forms without lifting, wobbling, or other variation of the machine which tend to affect the precision of concrete finish. Keep the tops of the forms clean by a device attached to the machine. During the first pass of the finishing machine, maintain a uniform ridge of concrete ahead of the front screed for its entire length.

3.5.1.2 Joint Finish

Before concrete is hardened, correct edge slump of pavement, exclusive of edge rounding, in excess of 0.02 foot. Finish concrete surface on each side of construction joints to the same plane, and correct deviations before newly placed concrete has hardened.

3.5.1.3 Hand Finishing

Strike-off and screed surface of concrete to elevations slightly above finish grade so that when concrete is consolidated and finished pavement surface is at the indicated elevation. Vibrate entire surface until required compaction and reduction of surface voids is secured with a strike-off template.

3.5.1.4 Longitudinal Floating

After initial finishing, further smooth and consolidate concrete by means of hand-operated longitudinal floats. Use floats that are not less than 12 feet long and 6 inches wide and stiffened to prevent flexing and warping.

3.5.2 Texturing

Before the surface sheen has disappeared and before the concrete hardens, the surface of the pavement shall be given a texture as described herein. Following initial texturing on the first day of placement, the Placing Foreman, Contracting Officer representative, and a representative of the Using Agency shall inspect the texturing for compliance with design requirements. After curing is complete, all textured surfaces shall be thoroughly power broomed to remove all debris. Any type of transverse texturing shall produce grooves in straight lines across each lane within a tolerance of plus or minus 1/2 inch of a true line. The concrete in areas of recesses for tie-down anchors, lighting fixtures, and other outlets in the pavement shall be finished to provide a surface of the same texture as the surrounding area.

3.5.2.1 Burlap Drag Finish

Before concrete becomes non-plastic, finish the surface of the slab by dragging on the surface a strip of clean, wet burlap measuring from 3 to 10 feet long and 2 feet wider than the width of the pavement. Select dimension of burlap drag so that at least 3 feet of the material is in contact with the pavement. Drag the surface so as to produce a finished surface with a fine granular or sandy texture without leaving disfiguring marks.

3.5.2.2 Brooming

Finish the surface of the slab by brooming the surface with a new wire broom at least 18 inches wide. Gently pull the broom over the surface of the pavement from edge to edge just before the concrete becomes non-plastic. Slightly overlap adjacent strokes of the broom. Broom perpendicular to centerline of pavement so that corrugations produced will be uniform in character and width, and not more than 1/16 inch in depth. Broomed surface shall be free from porous spots, irregularities, depressions, and small pockets or rough spots such as may be caused by accidentally disturbing particles of coarse aggregate embedded near the surface.

3.5.2.3 Wire-Comb Texturing

Surface texture transverse to the pavement center line shall be applied using a mechanical wire comb drag. The comb shall be capable of traversing the full width of the pavement in a single pass at a uniform speed and with a uniform pressure. Successive passes of the comb shall be overlapped the minimum necessary to obtain a continuous and uniformly textured surface. The scores shall be 1/16 to 3/16 inch deep, 1/16 to 1/8 inch wide, and spaced 3/8 inch apart.

3.5.2.4 Surface Grooving

The areas indicated on the drawings shall be grooved with a spring tine drag producing individual grooves 1/4 inch deep and 1/4 inch wide at a spacing between groove centerlines of 2 inches. These grooves shall be cut perpendicular to the centerline. Before grooving begins, the concrete shall be allowed to stiffen sufficiently to prevent dislodging of aggregate. Grooves shall not be cut within 6 inches of a transverse joint or crack.

3.5.3 Edging

At the time the concrete has attained a degree of hardness suitable for edging, carefully finish slab edges, including edges at formed joints, with an edge having a maximum radius of one-eighth inch. When brooming is specified for the final surface finish, edge transverse joints before starting brooming, then operate broom to obliterate as much as possible the mark left by the edging tool without disturbing the rounded corner left by the edger. Clean by removing loose fragments and soupy mortar from corners or edges of slabs which have crumbled and areas which lack sufficient mortar for proper finishing. Refill voids solidly with a mixture of suitable proportions and consistency and refinish. Remove unnecessary tool marks and edges. Remaining edges shall be smooth and true to line.

3.5.4 Repair of Surface Defects

Follow guidance of ACI 301.

3.6 CURING AND PROTECTION

Protect concrete adequately from injurious action by sun, rain, flowing water, frost, mechanical injury, tire marks and oil stains, and do not allow it to dry out from the time it is placed until the expiration of the minimum curing periods specified herein. Use White-Burlap-Polyethylene Sheet or liquid membrane-forming compound, except as specified otherwise herein. Do not use membrane-forming compound on surfaces where its appearance would be objectionable, on surfaces to be painted, where coverings are to be bonded to concrete, or on concrete to which other concrete is to be bonded. Maintain temperature of air next to concrete above 40 degrees F for the full curing periods.

3.6.1 White-Burlap-Polyethylene Sheet

Wet entire exposed surface thoroughly with a fine spray of water, saturate burlap but do not have excessive water dripping off the burlap and then cover concrete with White-Burlap-Polyethylene Sheet, burlap side down. Lay sheets directly on concrete surface and overlap 12 inches. Make sheeting not less than 18 inches wider than concrete surface to be cured, and weight down on the edges and over the transverse laps to form closed joints.

Repair or replace sheets when damaged during curing. Check daily to assure burlap has not lost all moisture. If moisture evaporates, resaturate burlap and re-place on pavement (re-saturation and re-placing shall take no longer than 10 minutes per sheet). Leave sheeting on concrete surface to be cured for at least 7 days.

3.6.2 Liquid Membrane-Forming Compound Curing

Apply compound immediately after surface loses its water sheen and has a dull appearance and before joints are sawed. Agitate curing compound thoroughly by mechanical means during use and apply uniformly in a two-coat continuous operation by suitable power-spraying equipment. Total coverage for the two coats shall be at least one gallon of undiluted compound per 200 square feet. Compound shall form a uniform, continuous, coherent film that will not check, crack, or peel and shall be free from pinholes or other imperfections. Apply an additional coat of compound immediately to areas where film is defective. Respray concrete surfaces that are subject to heavy rainfall within 3 hours after curing compound has been applied in the same manner.

3.6.2.1 Protection of Treated Surfaces

Keep concrete surfaces to which liquid membrane-forming compounds have been applied free from vehicular traffic and other sources of abrasion for not less than 72 hours. Foot traffic is allowed after 24 hours for inspection purposes. Maintain continuity of coating for entire curing period and repair damage to coating immediately.

3.6.3 Liquid Chemical Sealer-Hardener

Apply sealer-hardener to interior floors not receiving floor covering and floors located under access flooring. Apply the sealer-hardener in accordance with manufacturer's recommendations. Seal or cover joints and openings in which joint sealant is to be applied as required by the joint sealant manufacturer. The sealer-hardener shall not be applied until the concrete has been moist cured and has aged for a minimum of 30 days. Apply a minimum of two coats of sealer-hardener.

3.7 FIELD QUALITY CONTROL

3.7.1 Sampling

The Contractor's approved laboratory shall collect samples of fresh concrete in accordance with ASTM C172/C172M during each working day as required to perform tests specified herein. Make test specimens in accordance with ASTM C31/C31M.

3.7.2 Consistency Tests

The Contractor's approved laboratory shall perform concrete slump tests in accordance with ASTM C143/C143M. Take samples for slump determination from concrete during placement. Perform tests at the beginning of a concrete placement operation and and for each batch (minimum) or every 20 cubic yards (maximum) of concrete to ensure that specification requirements are met. In addition, perform tests each time test beams and cylinders are made.

3.7.3 Flexural Strength Tests

The Contractor's approved laboratory shall test for flexural strength in

accordance with ASTM C78/C78M. Make four test specimens for each set of tests. Test two specimens at 7 days, and the other two at 28 days. Concrete strength will be considered satisfactory when the minimum of the 28-day test results equals or exceeds the specified 28-day flexural strength, and no individual strength test is less than 550 pounds per square inch. If the ratio of the 7-day strength test to the specified 28-day strength is less than 65 percent, make necessary adjustments for conformance. Frequency of flexural tests on concrete beams shall be not less than four test beams for each 50 cubic yards of concrete, or fraction thereof, placed. Concrete which is determined to be defective, based on the strength acceptance criteria therein, shall be removed and replaced with acceptable concrete.

3.7.4 Air Content Tests

Test air-entrained concrete for air content at the same frequency as specified for slump tests. Determine percentage of air in accordance with ASTM C231/C231M on samples taken during placement of concrete in forms.

3.7.5 Surface Testing

Surface testing for surface smoothness , edge slump and plan grade shall be performed as indicated below by the Testing Laboratory. The measurements shall be properly referenced in accordance with paving lane identification and stationing, and a report given to the Government within 24 hours after measurement is made. A final report of surface testing, signed by a Registered Engineer, containing all surface measurements and a description of all actions taken to correct deficiencies, shall be provided to the Government upon conclusion of surface testing.

3.7.5.1 Surface Smoothness Requirements

The finished surfaces of the pavements shall have no abrupt change of 1/8 inch or more, and all pavements shall be within the tolerances specified when checked with a 12 foot straightedge: 1/5 inch longitudinal and 1/4 inch transverse directions for roads and streets and 1/4 inch for both directions for other concrete surfaces, such as parking areas.

3.7.5.2 Surface Smoothness Testing Method

The surface of the pavement shall be tested with the straightedge to identify all surface irregularities exceeding the tolerances specified above. The straightedge shall be 12 feet and be constructed of aluminum or other lightweight metal and shall have blades of box or box-girder cross section with flat bottom reinforced to ensure rigidity and accuracy. Straightedges shall have handles to facilitate movement on pavement. The entire area of the pavement shall be tested in both a longitudinal and a transverse direction on parallel lines approximately 15 feet apart. The straightedge shall be held in contact with the surface and moved ahead one-half the length of the straightedge for each successive measurement. The amount of surface irregularity shall be determined by placing the straightedge on the pavement surface and allowing it to rest upon the two highest spots covered by its length and measuring the maximum gap between the straightedge and the pavement surface, in the area between these two high points.

3.7.6 Plan Grade Testing and Conformance

The surfaces shall vary not more than 0.06 foot above or below the plan

grade line or elevation indicated. Each pavement category shall be checked by the Contractor for conformance with plan grade requirements by running lines of levels at intervals to determine the elevation at each joint intersection.

3.7.7 Test for Pavement Thickness

Full depth cores of 4 inch diameter shall be taken of concrete pavement to measure thickness.

3.7.8 Reinforcement

Inspect reinforcement prior to installation to assure it is free of loose flaky rust, loose scale, oil, mud, or other objectionable material.

3.7.9 Dowels

Inspect dowel placement prior to placing concrete to assure that dowels are of the size indicated, and are spaced, aligned and painted and oiled as specified. Dowels shall not deviate from vertical or horizontal alignment after concrete has been placed by more than 1/8 inch per foot.

3.8 WASTE MANAGEMENT

In accordance with the Waste Management Plan. Protect excess material from contamination and return to manufacturer, or reuse on-site for walkways, patching, ditch beds, speed bumps, or curbs.

-- End of Section --

SECTION 32 16 13

CONCRETE SIDEWALKS AND CURBS AND GUTTERS
04/08

PART 1 GENERAL

1.1 REFERENCES

The publications listed below form a part of this specification to the extent referenced. The publications are referred to within the text by the basic designation only.

AMERICAN ASSOCIATION OF STATE HIGHWAY AND TRANSPORTATION OFFICIALS (AASHTO)

AASHTO M 182	(2005; R 2009) Standard Specification for Burlap Cloth Made from Jute or Kenaf and Cotton Mats

ASTM INTERNATIONAL (ASTM)

ASTM A1064/A1064M	(2013) Standard Specification for Carbon-Steel Wire and Welded Wire Reinforcement, Plain and Deformed, for Concrete
ASTM A615/A615M	(2014) Standard Specification for Deformed and Plain Carbon-Steel Bars for Concrete Reinforcement
ASTM C143/C143M	(2012) Standard Test Method for Slump of Hydraulic-Cement Concrete
ASTM C171	(2007) Standard Specification for Sheet Materials for Curing Concrete
ASTM C172/C172M	(2010) Standard Practice for Sampling Freshly Mixed Concrete
ASTM C173/C173M	(2012) Standard Test Method for Air Content of Freshly Mixed Concrete by the Volumetric Method
ASTM C231/C231M	(2010) Standard Test Method for Air Content of Freshly Mixed Concrete by the Pressure Method
ASTM C309	(2011) Standard Specification for Liquid Membrane-Forming Compounds for Curing Concrete
ASTM C31/C31M	(2012) Standard Practice for Making and Curing Concrete Test Specimens in the Field
ASTM C920	(2014a) Standard Specification for Elastomeric Joint Sealants

ASTM D1751	(2004; E 2013; R 2013) Standard Specification for Preformed Expansion Joint Filler for Concrete Paving and Structural Construction (Nonextruding and Resilient Bituminous Types)
ASTM D1752	(2004a; R 2013) Standard Specification for Preformed Sponge Rubber Cork and Recycled PVC Expansion
ASTM D5893/D5893M	(2010) Cold Applied, Single Component, Chemically Curing Silicone Joint Sealant for Portland Cement Concrete Pavements

1.2 SYSTEM DESCRIPTION

1.2.1 General Requirements

Provide plant, equipment, machines, and tools used in the work subject to approval and maintained in a satisfactory working condition at all times. The equipment shall have the capability of producing the required product, meeting grade controls, thickness control and smoothness requirements as specified. Use of the equipment shall be discontinued if it produces unsatisfactory results. The Contracting Officer shall have access at all times to the plant and equipment to ensure proper operation and compliance with specifications.

1.2.2 Slip Form Equipment

Slip form paver or curb forming machine, will be approved based on trial use on the job and shall be self-propelled, automatically controlled, crawler mounted, and capable of spreading, consolidating, and shaping the plastic concrete to the desired cross section in 1 pass.

1.3 SUBMITTALS

Government approval is required for submittals with a "G" designation; submittals not having a "G" designation are for Contractor Quality Control approval. Submit the following in accordance with Section 01 33 00 SUBMITTAL PROCEDURES:

SD-03 Product Data

Concrete

SD-06 Test Reports

Field Quality Control

1.4 ENVIRONMENTAL REQUIREMENTS

1.4.1 Placing During Cold Weather

Do not place concrete when the air temperature reaches 40 degrees F and is falling, or is already below that point. Placement may begin when the air temperature reaches 35 degrees F and is rising, or is already above 40 degrees F. Make provisions to protect the concrete from freezing during the specified curing period. If necessary to place concrete when the

temperature of the air, aggregates, or water is below 35 degrees F, placement and protection shall be approved in writing. Approval will be contingent upon full conformance with the following provisions. The underlying material shall be prepared and protected so that it is entirely free of frost when the concrete is deposited. Mixing water and aggregates shall be heated as necessary to result in the temperature of the in-place concrete being between 50 and 85 degrees F. Methods and equipment for heating shall be approved. The aggregates shall be free of ice, snow, and frozen lumps before entering the mixer. Covering and other means shall be provided for maintaining the concrete at a temperature of at least 50 degrees F for not less than 72 hours after placing, and at a temperature above freezing for the remainder of the curing period.

1.4.2 Placing During Warm Weather

The temperature of the concrete as placed shall not exceed85 degrees F except where an approved retarder is used. The mixing water and/or aggregates shall be cooled, if necessary, to maintain a satisfactory placing temperature. The placing temperature shall not exceed95 degrees F at any time.

PART 2 PRODUCTS

2.1 CONCRETE

Provide concrete conforming to the applicable requirements of Section 03 30 00 CAST-IN-PLACE CONCRETE except as otherwise specified. Concrete shall have a minimum compressive strength of 3500 psi at 28 days. Maximum size of aggregate shall be 1-1/2 inches. Submit copies of certified delivery tickets for all concrete used in the construction.

2.1.1 Air Content

Mixtures shall have air content by volume of concrete of 5 to 7 percent, based on measurements made immediately after discharge from the mixer.

2.1.2 Slump

The concrete slump shall be 2 inches plus or minus 1 inch where determined in accordance with ASTM C143/C143M.

2.1.3 Reinforcement Steel

Reinforcement bars shall conform to ASTM A615/A615M. Wire mesh reinforcement shall conform to ASTM A1064/A1064M.

2.2 CONCRETE CURING MATERIALS

2.2.1 Impervious Sheet Materials

Impervious sheet materials shall conform to ASTM C171, type optional, except that polyethylene film, if used, shall be white opaque.

2.2.2 Burlap

Burlap shall conform to AASHTO M 182.

2.2.3 White Pigmented Membrane-Forming Curing Compound

White pigmented membrane-forming curing compound shall conform to ASTM C309, Type 2.

2.3 CONCRETE PROTECTION MATERIALS

Concrete protection materials shall be a linseed oil mixture of equal parts, by volume, of linseed oil and either mineral spirits, naphtha, or turpentine. At the option of the Contractor, commercially prepared linseed oil mixtures, formulated specifically for application to concrete to provide protection against the action of deicing chemicals may be used, except that emulsified mixtures are not acceptable.

2.4 JOINT FILLER STRIPS

2.4.1 Contraction Joint Filler for Curb and Gutter

Contraction joint filler for curb and gutter shall consist of hard-pressed fiberboard.

2.4.2 Expansion Joint Filler, Premolded

Expansion joint filler, premolded, shall conform to ASTM D1751 or ASTM D1752, 1/2 inch thick, unless otherwise indicated.

2.5 JOINT SEALANTS

Joint sealant, cold-applied shall conform to ASTM C920 or ASTM D5893/D5893M.

2.6 FORM WORK

Design and construct form work to ensure that the finished concrete will conform accurately to the indicated dimensions, lines, and elevations, and within the tolerances specified. Forms shall be of wood or steel, straight, of sufficient strength to resist springing during depositing and consolidating concrete. Wood forms shall be surfaced plank, 2 inches nominal thickness, straight and free from warp, twist, loose knots, splits or other defects. Wood forms shall have a nominal length of 10 feet. Radius bends may be formed with 3/4 inch boards, laminated to the required thickness. Steel forms shall be channel-formed sections with a flat top surface and with welded braces at each end and at not less than two intermediate points. Ends of steel forms shall be interlocking and self-aligning. Steel forms shall include flexible forms for radius forming, corner forms, form spreaders, and fillers. Steel forms shall have a nominal length of 10 feet with a minimum of 3 welded stake pockets per form. Stake pins shall be solid steel rods with chamfered heads and pointed tips designed for use with steel forms.

2.6.1 Sidewalk Forms

Sidewalk forms shall be of a height equal to the full depth of the finished sidewalk.

2.6.2 Curb and Gutter Forms

Curb and gutter outside forms shall have a height equal to the full depth of the curb or gutter. The inside form of curb shall have batter as indicated and shall be securely fastened to and supported by the outside

form. Rigid forms shall be provided for curb returns, except that benders or thin plank forms may be used for curb or curb returns with a radius of 10 feet or more, where grade changes occur in the return, or where the central angle is such that a rigid form with a central angle of 90 degrees cannot be used. Back forms for curb returns may be made of 1-1/2 inch benders, for the full height of the curb, cleated together. In lieu of inside forms for curbs, a curb "mule" may be used for forming and finishing this surface, provided the results are approved.

PART 3 EXECUTION

3.1 SUBGRADE PREPARATION

The subgrade shall be constructed to the specified grade and cross section prior to concrete placement. Subgrade shall be placed and compacted as directed.

3.1.1 Sidewalk Subgrade

The subgrade shall be tested for grade and cross section with a template extending the full width of the sidewalk and supported between side forms.

3.1.2 Curb and Gutter Subgrade

The subgrade shall be tested for grade and cross section by means of a template extending the full width of the curb and gutter. The subgrade shall be of materials equal in bearing quality to the subgrade under the adjacent pavement.

3.1.3 Maintenance of Subgrade

The subgrade shall be maintained in a smooth, compacted condition in conformity with the required section and established grade until the concrete is placed. The subgrade shall be in a moist condition when concrete is placed. The subgrade shall be prepared and protected to produce a subgrade free from frost when the concrete is deposited.

3.2 FORM SETTING

Set forms to the indicated alignment, grade and dimensions. Hold forms rigidly in place by a minimum of 3 stakes per form placed at intervals not to exceed 4 feet. Corners, deep sections, and radius bends shall have additional stakes and braces, as required. Clamps, spreaders, and braces shall be used where required to ensure rigidity in the forms. Forms shall be removed without injuring the concrete. Bars or heavy tools shall not be used against the concrete in removing the forms. Any concrete found defective after form removal shall be promptly and satisfactorily repaired. Forms shall be cleaned and coated with form oil each time before concrete is placed. Wood forms may, instead, be thoroughly wetted with water before concrete is placed, except that with probable freezing temperatures, oiling is mandatory.

3.2.1 Sidewalks

Set forms for sidewalks with the upper edge true to line and grade with an allowable tolerance of 1/8 inch in any 10 foot long section. After forms are set, grade and alignment shall be checked with a 10 foot straightedge. Forms shall have a transverse slope as indicated with the low side adjacent to the roadway. Side forms shall not be removed for 12 hours after

finishing has been completed.

3.2.2 Curbs and Gutters

The forms of the front of the curb shall be removed not less than 2 hours nor more than 6 hours after the concrete has been placed. Forms back of curb shall remain in place until the face and top of the curb have been finished, as specified for concrete finishing. Gutter forms shall not be removed while the concrete is sufficiently plastic to slump in any direction.

3.3 SIDEWALK CONCRETE PLACEMENT AND FINISHING

3.3.1 Formed Sidewalks

Place concrete in the forms in one layer. When consolidated and finished, the sidewalks shall be of the thickness indicated. After concrete has been placed in the forms, a strike-off guided by side forms shall be used to bring the surface to proper section to be compacted. The concrete shall be consolidated by tamping and spading or with an approved vibrator, and the surface shall be finished to grade with a strike off.

3.3.2 Concrete Finishing

After straightedging, when most of the water sheen has disappeared, and just before the concrete hardens, finish the surface with a wood or magnesium float or darby to a smooth and uniformly fine granular or sandy texture free of waves, irregularities, or tool marks. A scored surface shall be produced by brooming with a fiber-bristle brush in a direction transverse to that of the traffic, followed by edging.

3.3.3 Edge and Joint Finishing

All slab edges, including those at formed joints, shall be finished with an edger having a radius of 1/8 inch. Transverse joint shall be edged before brooming, and the brooming shall eliminate the flat surface left by the surface face of the edger. Corners and edges which have crumbled and areas which lack sufficient mortar for proper finishing shall be cleaned and filled solidly with a properly proportioned mortar mixture and then finished.

3.3.4 Surface and Thickness Tolerances

Finished surfaces shall not vary more than 5/16 inch from the testing edge of a 10-foot straightedge. Permissible deficiency in section thickness will be up to 1/4 inch.

3.4 CURB AND GUTTER CONCRETE PLACEMENT AND FINISHING

3.4.1 Formed Curb and Gutter

Concrete shall be placed to the section required in a single lift. Consolidation shall be achieved by using approved mechanical vibrators. Curve shaped gutters shall be finished with a standard curb "mule".

3.4.2 Curb and Gutter Finishing

Approved slipformed curb and gutter machines may be used in lieu of hand placement.

3.4.3 Concrete Finishing

Exposed surfaces shall be floated and finished with a smooth wood float until true to grade and section and uniform in texture. Floated surfaces shall then be brushed with a fine-hair brush with longitudinal strokes. The edges of the gutter and top of the curb shall be rounded with an edging tool to a radius of 1/2 inch. Immediately after removing the front curb form, the face of the curb shall be rubbed with a wood or concrete rubbing block and water until blemishes, form marks, and tool marks have been removed. The front curb surface, while still wet, shall be brushed in the same manner as the gutter and curb top. The top surface of gutter and entrance shall be finished to grade with a wood float.

3.4.4 Joint Finishing

Curb edges at formed joints shall be finished as indicated.

3.4.5 Surface and Thickness Tolerances

Finished surfaces shall not vary more than 1/4 inch from the testing edge of a 10-foot straightedge. Permissible deficiency in section thickness will be up to 1/4 inch.

3.5 SIDEWALK JOINTS

Sidewalk joints shall be constructed to divide the surface into rectangular areas. Transverse contraction joints shall be spaced at a distance equal to the sidewalk width or 5 feet on centers, whichever is less, and shall be continuous across the slab. Longitudinal contraction joints shall be constructed along the centerline of all sidewalks 10 feet or more in width. Transverse expansion joints shall be installed at sidewalk returns and opposite expansion joints in adjoining curbs. Where the sidewalk is not in contact with the curb, transverse expansion joints shall be installed as indicated. Expansion joints shall be formed about structures and features which project through or into the sidewalk pavement, using joint filler of the type, thickness, and width indicated. Expansion joints are not required between sidewalks and curb that abut the sidewalk longitudinally.

3.5.1 Sidewalk Contraction Joints

The contraction joints shall be formed in the fresh concrete by cutting a groove in the top portion of the slab to a depth of at least one-fourth of the sidewalk slab thickness, using a jointer to cut the groove, or by sawing a groove in the hardened concrete with a power-driven saw, unless otherwise approved. Sawed joints shall be constructed by sawing a groove in the concrete with a 1/8 inch blade to the depth indicated. An ample supply of saw blades shall be available on the job before concrete placement is started, and at least one standby sawing unit in good working order shall be available at the jobsite at all times during the sawing operations.

3.5.2 Sidewalk Expansion Joints

Expansion joints shall be formed with 1/2 inch joint filler strips. Joint filler in expansion joints surrounding structures and features within the sidewalk may consist of preformed filler material conforming to ASTM D1752 or building paper. Joint filler shall be held in place with steel pins or

other devices to prevent warping of the filler during floating and finishing. Immediately after finishing operations are completed, joint edges shall be rounded with an edging tool having a radius of 1/8 inch, and concrete over the joint filler shall be removed. At the end of the curing period, expansion joints shall be cleaned and filled with cold-applied joint sealant. Joint sealant shall be gray or stone in color. The joint opening shall be thoroughly cleaned before the sealing material is placed. Sealing material shall not be spilled on exposed surfaces of the concrete. Concrete at the joint shall be surface dry and atmospheric and concrete temperatures shall be above 50 degrees F at the time of application of joint sealing material. Excess material on exposed surfaces of the concrete shall be removed immediately and concrete surfaces cleaned.

3.5.3 Reinforcement Steel Placement

Reinforcement steel shall be accurately and securely fastened in place with suitable supports and ties before the concrete is placed.

3.6 CURB AND GUTTER JOINTS

Curb and gutter joints shall be constructed at right angles to the line of curb and gutter.

3.6.1 Contraction Joints

Contraction joints shall be constructed directly opposite contraction joints in abutting portland cement concrete pavements and spaced so that monolithic sections between curb returns will not be less than 5 feet nor greater than 15 feet in length.

a. Contraction joints (except for slip forming) shall be constructed by means of 1/8 inch thick separators and of a section conforming to the cross section of the curb and gutter. Separators shall be removed as soon as practicable after concrete has set sufficiently to preserve the width and shape of the joint and prior to finishing.

b. When slip forming is used, the contraction joints shall be cut in the top portion of the gutter/curb hardened concrete in a continuous cut across the curb and gutter, using a power-driven saw. The depth of cut shall be at least one-fourth of the gutter/curb depth and 1/8 inch in width.

3.6.2 Expansion Joints

Expansion joints shall be formed by means of preformed expansion joint filler material cut and shaped to the cross section of curb and gutter. Expansion joints shall be provided in curb and gutter directly opposite expansion joints of abutting portland cement concrete pavement, and shall be of the same type and thickness as joints in the pavement. Where curb and gutter do not abut portland cement concrete pavement, expansion joints at least 1/2 inch in width shall be provided at intervals not less than 30 feet nor greater than 120 feet. Expansion joints shall be provided in nonreinforced concrete gutter at locations indicated. Expansion joints shall be sealed immediately following curing of the concrete or as soon thereafter as weather conditions permit. Expansion joints and the top 1 inch depth of curb and gutter contraction-joints shall be sealed with joint sealant. The joint opening shall be thoroughly cleaned before the sealing material is placed. Sealing material shall not be spilled on exposed surfaces of the concrete. Concrete at the joint shall be surface dry and

atmospheric and concrete temperatures shall be above 50 degrees F at the time of application of joint sealing material. Excess material on exposed surfaces of the concrete shall be removed immediately and concrete surfaces cleaned.

3.7 CURING AND PROTECTION

3.7.1 General Requirements

Protect concrete against loss of moisture and rapid temperature changes for at least 7 days from the beginning of the curing operation. Protect unhardened concrete from rain and flowing water. All equipment needed for adequate curing and protection of the concrete shall be on hand and ready for use before actual concrete placement begins. Protection shall be provided as necessary to prevent cracking of the pavement due to temperature changes during the curing period.

3.7.1.1 Mat Method

The entire exposed surface shall be covered with 2 or more layers of burlap. Mats shall overlap each other at least 6 inches. The mat shall be thoroughly wetted with water prior to placing on concrete surface and shall be kept continuously in a saturated condition and in intimate contact with concrete for not less than 7 days.

3.7.1.2 Impervious Sheeting Method

The entire exposed surface shall be wetted with a fine spray of water and then covered with impervious sheeting material. Sheets shall be laid directly on the concrete surface with the light-colored side up and overlapped 12 inches when a continuous sheet is not used. The curing medium shall not be less than 18-inches wider than the concrete surface to be cured, and shall be securely weighted down by heavy wood planks, or a bank of moist earth placed along edges and laps in the sheets. Sheets shall be satisfactorily repaired or replaced if torn or otherwise damaged during curing. The curing medium shall remain on the concrete surface to be cured for not less than 7 days.

3.7.1.3 Membrane Curing Method

A uniform coating of white-pigmented membrane-curing compound shall be applied to the entire exposed surface of the concrete as soon after finishing as the free water has disappeared from the finished surface. Formed surfaces shall be coated immediately after the forms are removed and in no case longer than 1 hour after the removal of forms. Concrete shall not be allowed to dry before the application of the membrane. If any drying has occurred, the surface of the concrete shall be moistened with a fine spray of water and the curing compound applied as soon as the free water disappears. Curing compound shall be applied in two coats by hand-operated pressure sprayers at a coverage of approximately 200 square feet/gallon for the total of both coats. The second coat shall be applied in a direction approximately at right angles to the direction of application of the first coat. The compound shall form a uniform, continuous, coherent film that will not check, crack, or peel and shall be free from pinholes or other imperfections. If pinholes, abrasion, or other discontinuities exist, an additional coat shall be applied to the affected areas within 30 minutes. Concrete surfaces that are subjected to heavy rainfall within 3 hours after the curing compound has been applied shall be resprayed by the method and at the coverage specified above. Areas where

the curing compound is damaged by subsequent construction operations within the curing period shall be resprayed. Necessary precautions shall be taken to insure that the concrete is properly cured at sawed joints, and that no curing compound enters the joints. The top of the joint opening and the joint groove at exposed edges shall be tightly sealed before the concrete in the region of the joint is resprayed with curing compound. The method used for sealing the joint groove shall prevent loss of moisture from the joint during the entire specified curing period. Approved standby facilities for curing concrete pavement shall be provided at a location accessible to the jobsite for use in the event of mechanical failure of the spraying equipment or other conditions that might prevent correct application of the membrane-curing compound at the proper time. Concrete surfaces to which membrane-curing compounds have been applied shall be adequately protected during the entire curing period from pedestrian and vehicular traffic, except as required for joint-sawing operations and surface tests, and from any other possible damage to the continuity of the membrane.

3.7.2 Backfilling

After curing, debris shall be removed and the area adjoining the concrete shall be backfilled, graded, and compacted to conform to the surrounding area in accordance with lines and grades indicated.

3.7.3 Protection

Completed concrete shall be protected from damage until accepted. Repair damaged concrete and clean concrete discolored during construction. Concrete that is damaged shall be removed and reconstructed for the entire length between regularly scheduled joints. Refinishing the damaged portion will not be acceptable. Removed damaged portions shall be disposed of as directed.

3.7.4 Protective Coating

Protective coating, of linseed oil mixture, shall be applied to the exposed-to-view concrete surface after the curing period, if concrete will be exposed to de-icing chemicals within 6 weeks after placement. Concrete to receive a protective coating shall be moist cured.

3.7.4.1 Application

Curing and backfilling operation shall be completed prior to applying two coats of protective coating. Concrete shall be surface dry and clean before each application. Coverage shall be by spray application at not more than 50 square yards/gallon for first application and not more than 70 square yards/gallon for second application, except that the number of applications and coverage for each application for commercially prepared mixture shall be in accordance with the manufacturer's instructions. Coated surfaces shall be protected from vehicular and pedestrian traffic until dry.

3.7.4.2 Precautions

Protective coating shall not be heated by direct application of flame or electrical heaters and shall be protected from exposure to open flame, sparks, and fire adjacent to open containers or applicators. Material shall not be applied at ambient or material temperatures lower than 50 degrees F.

3.8 FIELD QUALITY CONTROL

Submit copies of all test reports within 24 hours of completion of the test.

3.8.1 General Requirements

Perform the inspection and tests described and meet the specified requirements for inspection details and frequency of testing. Based upon the results of these inspections and tests, take the action and submit reports as required below, and any additional tests to insure that the requirements of these specifications are met.

3.8.2 Concrete Testing

3.8.2.1 Strength Testing

Provide molded concrete specimens for strength tests. Samples of concrete placed each day shall be taken not less than once a day nor less than once for every 250 cubic yards of concrete. The samples for strength tests shall be taken in accordance with ASTM C172/C172M. Cylinders for acceptance shall be molded in conformance with ASTM C31/C31M by an approved testing laboratory. Each strength test result shall be the average of 2 test cylinders from the same concrete sample tested at 28 days, unless otherwise specified or approved. Concrete specified on the basis of compressive strength will be considered satisfactory if the averages of all sets of three consecutive strength test results equal or exceed the specified strength, and no individual strength test result falls below the specified strength by more than 500 psi.

3.8.2.2 Air Content

Determine air content in accordance with ASTM C173/C173M or ASTM C231/C231M. ASTM C231/C231M shall be used with concretes and mortars made with relatively dense natural aggregates. Two tests for air content shall be made on randomly selected batches of each class of concrete placed during each shift. Additional tests shall be made when excessive variation in concrete workability is reported by the placing foreman or the Government inspector. If results are out of tolerance, the placing foreman shall be notified and he shall take appropriate action to have the air content corrected at the plant. Additional tests for air content will be performed on each truckload of material until such time as the air content is within the tolerance specified.

3.8.2.3 Slump Test

Two slump tests shall be made on randomly selected batches of each class of concrete for every 250 cubic yards, or fraction thereof, of concrete placed during each shift. Additional tests shall be performed when excessive variation in the workability of the concrete is noted or when excessive crumbling or slumping is noted along the edges of slip-formed concrete.

3.8.3 Thickness Evaluation

The anticipated thickness of the concrete shall be determined prior to placement by passing a template through the formed section or by measuring the depth of opening of the extrusion template of the curb forming machine. If a slip form paver is used for sidewalk placement, the subgrade shall be true to grade prior to concrete placement and the thickness will

be determined by measuring each edge of the completed slab.

3.8.4 Surface Evaluation

The finished surface of each category of the completed work shall be uniform in color and free of blemishes and form or tool marks.

3.9 SURFACE DEFICIENCIES AND CORRECTIONS

3.9.1 Thickness Deficiency

When measurements indicate that the completed concrete section is deficient in thickness by more than 1/4 inch the deficient section will be removed, between regularly scheduled joints, and replaced.

3.9.2 High Areas

In areas not meeting surface smoothness and plan grade requirements, high areas shall be reduced either by rubbing the freshly finished concrete with carborundum brick and water when the concrete is less than 36 hours old or by grinding the hardened concrete with an approved surface grinding machine after the concrete is 36 hours old or more. The area corrected by grinding the surface of the hardened concrete shall not exceed 5 percent of the area of any integral slab, and the depth of grinding shall not exceed 1/4 inch. Pavement areas requiring grade or surface smoothness corrections in excess of the limits specified above shall be removed and replaced.

3.9.3 Appearance

Exposed surfaces of the finished work will be inspected by the Government and any deficiencies in appearance will be identified. Areas which exhibit excessive cracking, discoloration, form marks, or tool marks or which are otherwise inconsistent with the overall appearances of the work shall be removed and replaced.

-- End of Section --

SECTION 32 17 23.00 20

PAVEMENT MARKINGS
04/06

PART 1 GENERAL

1.1 REFERENCES

The publications listed below form a part of this specification to the extent referenced. The publications are referred to in the text by the basic designation only.

U.S. GENERAL SERVICES ADMINISTRATION (GSA)

FS TT-B-1325	(Rev D; Notice 1) Beads (Glass Spheres) Retro-Reflective (Metric)
FS TT-P-1952	(Rev E) Paint, Traffic and Airfield Markings, Waterborne

1.2 SUBMITTALS

Government approval is required for submittals with a "G" designation; submittals not having a "G" designation are for Contractor Quality Control approval. The following shall be submitted in accordance with Section 01 33 00 SUBMITTAL PROCEDURES:

SD-03 Product Data

Reflective media for roads and streets

Paints for roads and streets

Equipment

Lists of proposed equipment, including descriptive data, and notifications of proposed Contractor actions as specified in this section. List of removal equipment shall include descriptive data indicating area of coverage per pass, pressure adjustment range, tank and flow capacities, and safety precautions required for the equipment operation.

Qualifications

Documentation on personnel qualifications, as specified.

SD-06 Test Reports

Reflective media for roads and streets

Paints for roads and streets

Certified reports from sampling and testing made in accordance with paragraph entitled "Sampling and Testing" prior to the use of the materials at the jobsite. Testing shall be performed in an approved independent laboratory.

SD-07 Certificates

Reflective media for roads and streets

Paints for roads and streets

Certificate stating that the proposed pavement marking paint meets the VOC regulations of the local Air Pollution Control District having jurisdiction over the geographical area in which the project is located.

Construction equipment list

SD-08 Manufacturer's Instructions

Paints for roads and streets

Submit manufacturer's Material Safety Data Sheets.

1.3 DELIVERY AND STORAGE

Deliver paints, paint materials and thermoplastic compound materials in original sealed containers that plainly show the designated name, specification number, batch number, color, date of manufacture, manufacturer's directions, and name of manufacturer. Provide storage facilities at the job site for maintaining materials at temperatures recommended by the manufacturer.

1.4 WEATHER LIMITATIONS

Apply paint to clean, dry surfaces, and unless otherwise approved, only when the air and pavement surface temperature is at least 5 degrees above the dew point and the air and pavement temperatures are above 40 degrees F and less than 95 degrees F for oil-based materials; above 50 degrees F and less than 110 degrees F for water-based materials. Maintain paint temperature within these same limits.

1.5 EQUIPMENT

Machines, tools, and equipment used in the performance of the work shall be approved by the Contracting Officer and maintained in satisfactory operating condition. Submit construction equipment list for approval by the Contracting Officer.

1.5.1 Mobile and Maneuverable

Application equipment shall be mobile and maneuverable to the extent that straight lines can be followed and normal curves can be made in a true arc.

1.5.2 Paint Application Equipment

1.5.2.1 Hand-Operated, Push-Type Machines

Provide hand-operated push-type applicator machine of a type commonly used for application of paint to pavement surfaces. Paint applicator machine shall be acceptable for marking small street and parking areas. Applicator machine shall be equipped with the necessary paint tanks and spraying nozzles, and shall be capable of applying paint uniformly at coverage

specified. Applicator for water-based markings shall be equipped with non-stick coated hoses; metal parts in contact with the paint material shall be constructed of grade 302, 304, 316, or equal stainless steel.

1.5.2.2 Self-Propelled or Mobile-Drawn Pneumatic Spraying Machines

Provide self-propelled or mobile-drawn pneumatic spraying machine with suitable arrangements of atomizing nozzles and controls to obtain the specified results. Provide machine having a speed during application capable of applying the stripe widths indicated at the paint coverage rate specified herein and of even uniform thickness with clear-cut edges. Provide paint applicator with paint reservoirs or tanks of sufficient capacity and suitable gages to apply paint in accordance with requirements specified. Equip tanks with suitable air-driven mechanical agitators. Equip spray mechanism with quick-action valves conveniently located, and include necessary pressure regulators and gages in full view and reach of the operator. Install paint strainers in paint supply lines to ensure freedom from residue and foreign matter that may cause malfunction of the spray guns. The paint applicator shall be readily adaptable for attachment of an air-actuated dispenser for the reflective media approved for use. Provide pneumatic spray guns for hand application of paint in areas where the mobile paint applicator cannot be used. Applicator for water-based markings shall be equipped with non-stick coated hoses; metal parts in contact with the paint material shall be constructed of grade 302, 304, 316, or equal stainless steel.

1.5.3 Reflective Media Dispenser

The dispenser for applying the reflective media shall be attached to the paint dispenser and shall operate automatically and simultaneously with the applicator through the same control mechanism. The dispenser shall be capable of adjustment and designed to provide uniform flow of reflective media over the full length and width of the stripe at the rate of coverage specified in paragraph APPLICATION, at all operating speeds of the applicator to which it is attached.

1.5.4 Surface Preparation Equipment

1.5.4.1 Waterblast Equipment

The water pressure shall be specified at 2600 psi at 140 degrees F in order to adequately clean the surfaces to be marked. Water will be furnished at no cost to the Contractor from a fire hydrant designated by the Contracting Officer or authorized representative and located within a reasonable proximity to the work area. The Contractor shall install a gate valve and a back-flow prevention device on the fire hydrant tap. The Contractor shall furnish all equipment, material, and labor required to obtain and deliver water from the designated fire hydrant to the work area(s).

1.5.5 Traffic Controls

Suitable warning signs shall be placed near the beginning of the worksite and well ahead of the worksite for alerting approaching traffic from both directions. Small markers shall be placed along newly painted lines or freshly placed raised markers to control traffic and prevent damage to newly painted surfaces or displacement of raised pavement markers. Painting equipment shall be marked with large warning signs indicating slow-moving painting equipment in operation.

1.6 MAINTENANCE OF TRAFFIC

1.6.1 Roads, Streets, and Parking Areas

When traffic must be rerouted or controlled to accomplish the work, the necessary warning signs, flagpersons, and related equipment for the safe passage of vehicles shall be provided.

1.7 QUALIFICATIONS

The Contractor shall submit documentation certifying that pertinent personnel are qualified for equipment operation and handling of chemicals.

PART 2 PRODUCTS

2.1 MATERIALS

Provide materials conforming to the requirements specified herein.

2.1.1 Paints for Roads and Streets

FS TT-P-1952, color as indicated.

2.1.2 Reflective Media for Roads and Streets

FS TT-B-1325, Type I, Gradation A.

PART 3 EXECUTION

3.1 SURFACE PREPARATION

Allow new pavement surfaces to cure for a period of not less than 30 days before application of marking materials. Thoroughly clean surfaces to be marked before application of the paint. Remove dust, dirt, and other granular surface deposits by sweeping, blowing with compressed air, rinsing with water, or a combination of these methods as required. Remove impregnated dirt or other coatings adhering to the pavement by water blasting. Do not commence painting in any area until pavement surfaces are dry and clean.

3.1.1 Early Painting of Rigid Pavements

Pretreat rigid pavements that require early painting with an aqueous solution containing 3 percent phosphoric acid and 2 percent zinc chloride. Apply the solution to the areas to be marked.

3.1.2 Early Painting of Asphalt Pavements

For asphalt pavement systems requiring painting application at less than 30 days, apply the paint and beads at half the normal application rate, followed by a second application at the normal rate after 30 days.

3.2 APPLICATION

All road markings shall be retroreflective, unless indicated otherwise. All other pavement markings shall be non-reflective unless indicated otherwise.

3.2.1 Testing for Moisture

Apply pavement markings to dry pavement only. The Contractor shall test the pavement surface for moisture before beginning work after each period of rainfall, fog, high humidity, or cleaning, or when the ambient temperature has fallen below the dew point. Do not commence marking until the pavement is sufficiently dry and the pavement condition has been approved by the CO or authorized representative. Employ the "plastic wrap method" to test the pavement for moisture as follows: Cover the pavement with a 300 mm by 300 mm (12 inch by 12 inch) section of clear plastic wrap and seal the edges with tape. After 15 minutes, examine the plastic wrap for any visible moisture accumulation inside the plastic. Do not begin marking operations until the test can be performed with no visible moisture accumulation inside the plastic wrap.

3.2.2 Rate of Application

3.2.2.1 Reflective Markings

Apply paint evenly to the pavement area to be coated at a rate of 105 plus or minus 5 square feet per gallon. Apply glass spheres uniformly to the wet paint on road and street pavement at a rate of (6) plus or minus (0.5) pounds of glass spheres per gallon. Collect and record readings for white and yellow retroreflective markings at the rate of one reading per 1000 linear feet. The minimum acceptable average for white markings is 200 millicandelas per square meter per lux (mcd/m2/lx) (measured with Mirolux 12 Retroreflectometer or similar instrument as agreed). The minimum acceptable average for yellow markings is 175 millicandelas per square meter per lux (mcd/m2/lx). Readings shall be computed by averaging a minimum of 10 readings taken within the area at random locations. Areas not meeting the retroreflective requirements stated above shall be re-marked.

3.2.2.2 Nonreflective Markings

Apply paint evenly to the pavement surface to be coated at a rate of 105 plus or minus 5 square feet per gallon.

3.2.3 Painting

Apply paint pneumatically with approved equipment at rate of coverage specified herein. Provide guidelines and templates as necessary to control paint application. Take special precautions in marking numbers, letters, and symbols. Manually paint numbers, letters, and symbols. Sharply outline all edges of markings. The maximum drying time requirements of the paint specifications will be strictly enforced, to prevent undue softening of bitumen, and pickup, displacement, or discoloration by tires of traffic. Discontinue painting operations if there is a deficiency in drying of the markings until cause of the slow drying is determined and corrected.

3.2.4 Reflective Media

Application of reflective media shall immediately follow the application of paint. Accomplish drop-on application of the glass spheres to ensure even distribution at the specified rate of coverage. Should there be malfunction of either paint applicator or reflective media dispenser, discontinue operations until deficiency is corrected.

3.3 FIELD TESTING, INSPECTION, AND DEMONSTRATIONS

3.3.1 Sampling and Testing

As soon as the paint and reflective materials are available for sampling, obtain by random selection from the sealed containers, two quart samples of each batch in the presence of the Contracting Officer. Accomplish adequate mixing prior to sampling to ensure a uniform, representative sample. A batch is defined as that quantity of material processed by the manufacturer at one time and identified by number on the label. Clearly identify samples by designated name, specification number, batch number, project contract number, intended use, and quantity involved.

3.3.2 Inspection

Examine material at the job site to determine that it is the material referenced in the report of test results or certificate of compliance. A certificate of compliance shall be accompanied by test results substantiating conformance to the specified requirements.

3.3.3 Surface Preparations and Application Procedures

Surface preparations and application procedures will be examined by the Contracting Officer to determine conformance with the requirements specified. Approve each separate operation prior to initiation of subsequent operations.

3.3.3.1 Application Rate Demonstration

During the Test Stripe Demonstration, demonstrate compliance with the application rates specified herein. Document the equipment speed and operating pressures required to meet the specified rates in each configuration of the equipment and provide a copy of the documentation to the Contracting Officer or authorized representative 7 days prior to proceeding with the work.

3.3.3.2 Retroreflective Value Demonstration

After the test stripes have cured to a "no-track" condition, demonstrate compliance with the average retroreflective values specified herein. Take a minimum of ten readings on each test stripe with a Mirolux 12 Retroreflectometer, or similar instrument with the same measuring geometry and direct readout in millicandelas per square meter per lux (mcd/m2/lx).

3.4 TRAFFIC CONTROL AND PROTECTION

Place warning signs near the beginning of the work site and well ahead of the work site for alerting approaching traffic from both directions. Place small markers along newly painted lines to control traffic and prevent damage to newly painted surfaces. Mark painting equipment with large warning signs indicating slow-moving painting equipment in operation. Do not use foil-backed material for temporary pavement marking because of its potential to conduct electricity during accidents involving downed power lines.

3.5 QUALITY ASSURANCE

Demonstrate success of bond of reflective media, new paint marking and the pavement surface, vacuum cured surface of new marking after a seven (7) day

dry time. Inspect newly applied markings for signs of bond failure based on visual inspection and comparison to results from Test Stripe Demonstration paragraph.

3.5.1 Reflective Media and Coating Bond Verification

Within seven (7) days after pavement marking application, use industrial vacuum to sweep new markings. Visually inspect the pavement markings and the material captured by the vacuum. Verify that no significant loss of reflective media has occurred to the pavement marking due to the vacuum cleaning.

3.5.2 Reflective Media and Coating Application Verification

Use a wet film thickness gauge to measure the application of wet paint.

Use a microscope or magnifying glass to evaluate the embedment of glass beads in the paint. Verify the glass bead embedment with approximately 50 percent of the beads embedded and 50 percent of the beads exposed.

-- End of Section --

THIS PAGE HAS BEEN INTENTIONALLY LEFT BLANK

SECTION 32 92 23

SODDING
04/06

PART 1 GENERAL

1.1 REFERENCES

The publications listed below form a part of this specification to the extent referenced. The publications are referred to within the text by the basic designation only.

ASTM INTERNATIONAL (ASTM)

ASTM C602	(2013a) Agricultural Liming Materials
ASTM D4972	(2013) pH of Soils

TURFGRASS PRODUCERS INTERNATIONAL (TPI)

TPI GSS	(1995) Guideline Specifications to Turfgrass Sodding

U.S. DEPARTMENT OF AGRICULTURE (USDA)

DOA SSIR 42	(1996) Soil Survey Investigation Report No. 42, Soil Survey Laboratory Methods Manual, Version 3.0

1.2 DEFINITIONS

1.2.1 Stand of Turf

100 percent ground cover of the established species.

1.3 RELATED REQUIREMENTS

Section 31 23 00.00 20 EXCAVATION AND FILL, Section 32 93 00 EXTERIOR PLANTS, and Section 32 05 33 LANDSCAPE ESTABLISHMENT applies to this section for pesticide use and plant establishment requirements, with additions and modifications herein.

1.4 SUBMITTALS

Government approval is required for submittals with a "G" designation; submittals not having a "G" designation are for Contractor Quality Control approval. The following shall be submitted in accordance with Section 01 33 00 SUBMITTAL PROCEDURES:

SD-03 Product Data

Fertilizer

Include physical characteristics, and recommendations.

SD-06 Test Reports

Topsoil composition tests (reports and recommendations).

SD-07 Certificates

Nursery, Sod farm certification for sods. Indicate type of sod in accordance with TPI GSS. Indcate percentages of soil type of growing media used for sod.

1.5 DELIVERY, STORAGE, AND HANDLING

1.5.1 Delivery

1.5.1.1 Sod Protection

Protect from drying out and from contamination during delivery, on-site storage, and handling.

1.5.1.2 Fertilizer Delivery

Deliver to the site in original, unopened containers bearing manufacturer's chemical analysis, name, trade name, trademark, and indication of conformance to state and federal laws.

1.5.2 Storage

1.5.2.1 Sod Storage

Lightly sprinkle with water, cover with moist burlap, straw, or other approved covering; and protect from exposure to wind and direct sunlight until planted. Provide covering that will allow air to circulate so that internal heat will not develop. Do not store sod longer than 24 hours. Do not store directly on concrete or bituminous surfaces.

1.5.2.2 Topsoil

Prior to stockpiling topsoil, treat growing vegetation with application of appropriate specified non-selective herbicide. Clear and grub existing vegetation three to four weeks prior to stockpiling topsoil.

1.5.2.3 Handling

Do not drop or dump materials from vehicles.

1.6 TIME RESTRICTIONS AND PLANTING CONDITIONS

1.6.1 Restrictions

Do not plant when the ground is frozen, snow covered, muddy, or when air temperature exceeds 90 degrees Fahrenheit.

1.7 TIME LIMITATIONS

1.7.1 Sod

Place sod a maximum of thirty six hours after initial harvesting, in accordance with TPI GSS as modified herein.

PART 2 PRODUCTS

2.1 SODS

2.1.1 Classification

Nursery grown, certified as classified in the TPI GSS. Machine cut sod at a uniform thickness of 3/4 inch within a tolerance of 1/4 inch, excluding top growth and thatch. Each individual sod piece shall be strong enough to support its own weight when lifted by the ends. Broken pads, irregularly shaped pieces, and torn or uneven ends will be rejected.Wire staples for anchorage shall be as recommended by sod supplier.

Sod shall be grown in a soil media containing from 5 to 10 percent organic matter as determined by the topsoil composition tests of the Organic Carbon, 6A, Chemical Analysis Method described in DOA SSIR 42. Maximum particle size, 3/4 inch, with maximum 3 percent retained on 1/4 inch screen. The pH shall be tested in accordance with ASTM D4972. Topsoil shall be free of sticks, stones, roots, and other debris and objectionable materials. Other components shall conform to the following limits:

Silt	10 percent
Clay	10 percent
Sand	80 percent
pH	5.5 to 7.0
Soluble Salts	600 ppm maximum

2.1.2 Purity

Sod species shall be genetically pure, free of weeds, pests, and disease.

2.1.3 Planting Dates

Lay sod from March 1 to August 31 for warm season spring planting and from September 1 to February 1 for cool season fall planting.

2.1.4 Composition

2.1.4.1 Proportion

Proportion grass species as follows.

Botanical Name	Common Name	Percent
Cynoden dactylon	Centipede Grass	100

2.2 TOPSOIL

2.2.1 On-Site Topsoil

Surface soil stripped and stockpiled on site and modified as necessary to meet the requirements specified for topsoil in paragraph entitled "Composition." When available topsoil shall be existing surface soil stripped and stockpiled on-site in accordance with Section 31 23 00.00 20 EXCAVATION AND FILL.

2.2.2 Off-Site Topsoil

Conform to requirements specified in paragraph entitled "Composition." Additional topsoil shall be furnished by the Contractor.

2.2.3 Composition

Containing from 5 to 10 percent organic matter as determined by the topsoil composition tests of the Organic Carbon, 6A, Chemical Analysis Method described in DOA SSIR 42. Maximum particle size, 3/4 inch, with maximum 3 percent retained on 1/4 inch screen. The pH shall be tested in accordance with ASTM D4972. Topsoil shall be free of sticks, stones, roots, and other debris and objectionable materials. Other components shall conform to the following limits:

Silt	10 percent
Clay	10 percent
Sand	80 percent
pH	5.5 to 7.0
Soluble Salts	600 ppm maximum

2.3 SOIL CONDITIONERS

Add conditioners to topsoil as required to bring into compliance with "composition" standard for topsoil as specified herein.

2.3.1 Lime

Commercial grade hydrate or burnt limestone containing a calcium carbonate equivalent (C.C.E.) as specified in ASTM C602 of not less than 100 percent.

2.3.2 Aluminum Sulfate

Commercial grade.

2.3.3 Sulfur

100 percent elemental

2.3.4 Iron

100 percent elemental

2.3.5 Sand

Clean and free of materials harmful to plants.

2.3.6 Perlite

Horticultural grade.

2.3.7 Composted Derivatives

Ground bark, nitrolized sawdust, humus or other green wood waste material free of stones, sticks, and soil stabilized with nitrogen and having the following properties:

2.3.7.1 Particle Size

Minimum percent by weight passing:

No. 4 mesh screen	95
No. 8 mesh screen	80

2.3.7.2 Nitrogen Content

Minimum percent based on dry weight:

Fir Sawdust	0.7
Fir or Pine Bark	1.0

2.3.8 Gypsum

Coarsely ground gypsum comprised of calcium sulfate dihydrate 91 percent, calcium 22 percent, sulfur 17 percent; minimum 96 percent passing through 20 mesh screen, 100 percent passing thru 16 mesh screen.

2.3.9 Calcined Clay

Calcined clay shall be granular particles produced from montmorillonite clay calcined to a minimum temperature of 1200 degrees F. Gradation: A minimum 90 percent shall pass a No. 8 sieve; a minimum 99 percent shall be retained on a No. 60 sieve; and a maximum 2 percent shall pass a No. 100 sieve. Bulk density: A maximum 40 pounds per cubic foot.

2.4 FERTILIZER

2.4.1 Granular Fertilizer

Organic or synthetic, granular controlled release fertilizer containing the following minimum percentages, by weight, of plant food nutrients:

10 percent available nitrogen
20 percent available phosphorus
20 percent available potassium
0 percent sulfur
0 percent iron

2.5 WATER

Source of water shall be approved by Contracting Officer and of suitable quality for irrigation containing no element toxic to plant life.

PART 3 EXECUTION

3.1 PREPARATION

3.1.1 Extent Of Work

Provide soil preparation (including soil conditioners), fertilizing, and sodding of all newly graded finished earth surfaces, unless indicated otherwise, and at all areas inside or outside the limits of construction that are disturbed by the Contractor's operations.

3.1.2 Soil Preparation

Provide 4 inches of off-site topsoil or on-site topsoil to meet indicated finish grade. After areas have been brought to indicated finish grade, incorporate fertilizer, pH adjusters, and soil conditioners into soil a minimum depth of 4 inches by disking, harrowing, tilling or other method approved by the Contracting Officer. Remove debris and stones larger than 3/4 inch in any dimension remaining on the surface after finish grading. Correct irregularities in finish surfaces to eliminate depressions. Protect finished topsoil areas from damage by vehicular or pedestrian traffic.

3.1.2.1 Soil Conditioner Application Rates

Apply soil conditioners at rates as determined by laboratory soil analysis of the soils at the job site. For bidding purposes only apply at rates for the following:

Lime 3000 pounds per acre

Compost Derivatives 135 cubic yard per acre.

3.1.2.2 Fertilizer Application Rates

Apply fertilizer at rates as determined by laboratory soil analysis of the soils at the job site. For bidding purposes only apply at rates for the following:

Organic Granular Fertilizer 200 pounds per acre.

Synthetic Granular Fertilizer 500 pounds per acre.

3.2 SODDING

3.2.1 Finished Grade and Topsoil

Prior to the commencement of the sodding operation, the Contractor shall verify that finished grades are as indicated on drawings; the placing of topsoil, smooth grading, and compaction requirements have been completed in accordance with Section 31 23 00.00 20 EXCAVATION AND FILL.

The prepared surface shall be a maximum 1 inch below the adjoining grade of any surfaced area. New surfaces shall be blended to existing areas. The prepared surface shall be completed with a light raking to remove from the surface debris and stones over a minimum 5/8 inch in any dimension.

3.2.2 Placing

Place sod a maximum of 36 hours after initial harvesting, in accordance with TPI GSS as modified herein.

3.2.3 Sodding Slopes and Ditches

For slopes 2:1 and greater, lay sod with long edge perpendicular to the contour. For V-ditches and flat bottomed ditches, lay sod with long edge perpendicular to flow of water. Anchor each piece of sod with wire staples maximum 2 feet on center. On slope areas, start sodding at bottom of the slope.

3.2.4 Finishing

After completing sodding, blend edges of sodded area smoothly into surrounding area. Air pockets shall be eliminated and a true and even surface shall be provided. Frayed edges shall be trimmed and holes and missing corners shall be patched with sod.

3.2.5 Rolling

Immediately after sodding, firm entire area except for slopes in excess of 3 to 1 with a roller not exceeding 90 pounds for each foot of roller width.

3.2.6 Watering

Start watering areas sodded as required by daily temperature and wind conditions. Apply water at a rate sufficient to ensure thorough wetting of soil to minimum depth of 6 inches. Run-off, puddling, and wilting shall be prevented. Unless otherwise directed, watering trucks shall not be driven over turf areas. Watering of other adjacent areas or plant material shall be prevented.

3.3 PROTECTION OF TURF AREAS

Immediately after turfing, protect area against traffic and other use.

3.4 RENOVATION OF EXISTING TURF AREA

3.4.1 Aeration

Upon completion of weed eradication operations and Contracting Officer's approval to proceed, aerate turf areas indicated , by approved device. Core, by pulling soil plugs, to a minimum depth of 2 inches. Leave all soil plugs, that are produced, in the turf area. Remove all debris generated during this operation off site. After aeration operations are complete, topdress entire area 1/4 inch depth with the following mixture:

80 percent sand
5 percent humus
5 percent gypsum
5 percent organic fertilizer
5 percent synthetic fertilizer

Blend all parts of topdressing mixture to a uniform consistency throughout. Keep clean at all times at least one paved pedestrian access route and one paved vehicular access route to each building. Clean all soil plugs off of other paving when work is complete.

3.4.2 Vertical Mowing

Upon completion of aerating operation and Contracting Officer's approval to proceed, vertical mow turf areas indicated, by approved device, to a depth of 1/4 inch above existing soil level, to reduce thatch build-up, grain, and surface compaction. Keep clean at all times at least one paved pedestrian access route and one paved vehicular access route to each building. Clean other paving when work is complete. Remove all debris generated during this operation off site.

3.4.3 Dethatching

Upon completion of aerating operation and Contracting Officer's approval to proceed, dethatch turf areas indicated, by approved device, to a depth of 1/4 inch below existing soil level, to reduce thatch build-up, grain, and surface compaction. Keep clean at all times at least one paved pedestrian access route and one paved vehicular access route to each building. Clean other paving when work is complete. Remove all debris generated during this operation off site.

3.5 RESTORATION

Restore to original condition existing turf areas which have been damaged during turf installation operations. Keep clean at all times at least one paved pedestrian access route and one paved vehicular access route to each building. Clean other paving when work in adjacent areas is complete.

-- End of Section --

SECTION 32 93 00

EXTERIOR PLANTS
02/10

PART 1 GENERAL

1.1 REFERENCES

The publications listed below form a part of this specification to the extent referenced. The publications are referred to within the text by the basic designation only.

AMERICAN NURSERY & LANDSCAPE ASSOCIATION (ANLA)

ANSI/ANLA Z60.1	(2004) American Standard for Nursery Stock

ASTM INTERNATIONAL (ASTM)

ASTM A580/A580M	(2013b) Standard Specification for Stainless Steel Wire
ASTM C602	(2013a) Agricultural Liming Materials
ASTM D4972	(2013) pH of Soils
ASTM D5268	(2013) Topsoil Used for Landscaping Purposes
ASTM D5852	(2000; R 2007) Standard Test Method for Erodibility Determination of Soil in the Field or in the Laboratory by the Jet Index Method
ASTM D6629	(2001; E 2012; R 2012) Selection of Methods for Estimating Soil Loss by Erosion

L.H. BAILEY HORTORIUM (LHBH)

LHBH	(1976) Hortus Third

TREE CARE INDUSTRY ASSOCIATION (TCIA)

TCIA A300P1	(2008) ANSI A300 Part1: Tree Care Operations - Trees, Shrubs and Other Woody Plant Maintenance Standard Practices - Pruning
TCIA Z133.1	(2006) American National Standard for Arboricultural Operations - Pruning, Repairing, Maintaining, and Removing Trees, and Cutting Brush - Safety Requirements

U.S. DEPARTMENT OF AGRICULTURE (USDA)

DOA SSIR 42	(1996) Soil Survey Investigation Report No. 42, Soil Survey Laboratory Methods

Manual, Version 3.0

U.S. GREEN BUILDING COUNCIL (USGBC)

LEED NC (2009) Leadership in Energy and Environmental Design(tm) New Construction Rating System

1.2 RELATED REQUIREMENTS

Section 31 23 00.00 20 EXCAVATON AND FILL, Section 32 92 23 SODDING, and Section 32 05 33 LANDSCAPE ESTABLISHMENT applies to this section for pesticide use and plant establishment requirements, with additions and modifications herein.

1.3 SUBMITTALS

Government approval is required for submittals with a "G" designation; submittals not having a "G" designation are for Contractor Quality Control approval. The following shall be submitted in accordance with Section 01 33 00 SUBMITTAL PROCEDURES:

SD-01 Preconstruction Submittals

State Landscape Contractor's License
Time Restrictions and Planting Conditions
Indicate anticipated dates and locations for each type of planting.

SD-03 Product Data

Local/Regional Materials; (LEED NC)

Submit documentation indicating distance between manufacturing facility and the project site. Indicate distance of raw material origin from the project site. Indicate relative dollar value of local/regional materials to total dollar value of products included in project.

Gypsum; (LEED NC)
Mulch; G, LA
Ground Stakes
Organic Mulch Materials; G, LA
Hose; (LEED NC)

Submit documentation indicating percentage of post-industrial and post-consumer recycled content per unit of product. Indicate relative dollar value of recycled content products to total dollar value of products included in project.

Fertilizer
Weed control fabric; G, LA
Root control barrier; G, LA
Staking Material
Composted Derivatives
Local/Regional Materials;
Metal anchors
Erosion control materials
Photographs

SD-04 Samples

Mulch

Submit one pint of each type of mulch.

SD-06 Test Reports

Topsoil composition tests; Soil Test of current growing area; Soil Test of proposed area;

Percolation Test; Percolation Test of proposed area

SD-07 Certificates

Nursery certifications

Indicate names of plants in accordance with the LHBH, including type, quality, and size.

1.4 QUALITY ASSURANCE

1.4.1 Topsoil Composition Tests

Commercial test from an independent testing laboratory including basic soil groups (moisture and saturation percentages, Nitrogen-Phosphorus-Potassium (N-P-K) ratio, pH (ASTM D4972), soil salinity), secondary nutrient groups (calcium, magnesium, sodium, Sodium Absorption Ratio (SAR)), micronutrients (zinc, manganese, iron, copper), toxic soil elements (boron, chloride, sulfate), cation exchange and base saturation percentages, and soil amendment and fertilizer recommendations with quantities for plant material being transplanted. Soil required for each test shall include a maximum depth of 18 inches of approximately 1 quart volume for each test. Areas sampled should not be larger than 1 acre and should contain at least 6-8 cores for each sample area and be thoroughly mixed. Problem areas should be sampled separately and compared with samples taken from adjacent non-problem areas. The location of the sample areas should be noted and marked on a parcel or planting map for future reference.

1.4.2 Nursery Certifications

a. Indicate on nursery letterhead the name of plants in accordance with the LHBH, including botanical common names, quality, and size.

b. Inspection certificate.

c. Mycorrhizal fungi inoculum for plant material treated

1.4.3 State Landscape Contractor's License

Construction company shall hold a landscape contractors license in the state where the work is performed and have a minimum of five years landscape construction experience. Submit copy of license and three references for similar work completed in the last five years.

1.4.4 Plant Material Photographs

Contractor shall submit nursery photographs, for government approval prior to ordering, for each tree larger than 24-inch box/ 2-inch caliper size.

1.4.5 Percolation Test

Immediately following rough grading operation, identify a typical location for one of the largest trees and or shrubs and excavate a pit per the project details. Fill the pit with water to a depth of 12 inches. The length of time required for the water to percolate into the soil, leaving the pit empty, shall be measured by the project Landscape Architect and verified by the Contracting Officer. Within six hours of the time the water has drained from the pit, the Contractor, with the Contracting Officer and project Landscape Architect present, shall again fill the pit with water to a depth of 12 inches. If the water does not completely percolate into the soil within 9 hours, a determination shall be made whether a drainage system or a soil penetrant will be required for each tree and or shrub being transplanted.

1.4.6 Erosion Assessment

Assess potential effects of soil management practices on soil loss in accordance with ASTM D6629. Assess erodibility of soil with dominant soil structure less than 2.8 to 3.1 inches in accordance with ASTM D5852.

1.4.7 Pre-Installation Meeting

Convene a pre-installation meeting a minimum of one week prior to commencing work of this section. Require attendance of parties directly affecting work of this section. Review conditions of operations, procedures and coordination with related work. Agenda shall include the following:

a. Tour, inspect, and discuss conditions of planting materials.

b. Review planting schedule and maintenance.

c. Review required inspections.

d. Review environmental procedures.

1.5 DELIVERY, STORAGE, AND HANDLING

1.5.1 Delivery

1.5.1.1 Branched Plant Delivery

Deliver with branches tied and exposed branches covered with material which allows air circulation. Prevent damage to branches, trunks, root systems, and root balls and desiccation of leaves.

1.5.1.2 Soil Amendment Delivery

Deliver to the site in original, unopened containers bearing manufacturer's chemical analysis, name, trade name, or trademark, and indication of conformance to state and federal laws. Instead of containers, fertilizer, gypsum, iron, and lime may be furnished in bulk with a certificate indicating the above information. Store in dry locations away from contaminates.

1.5.1.3 Plant Labels

Deliver plants with durable waterproof labels in weather-resistant ink. Provide labels stating the correct botanical and common plant name and variety as applicable and size as specified in the list of required plants. Attach to plants, bundles, and containers of plants. Groups of plants may be labeled by tagging one plant. Labels shall be legible for a minimum of 60 days after delivery to the planting site.

1.5.2 Storage

1.5.2.1 Plant Storage and Protection

Store and protect plants not planted on the day of arrival at the site as follows:

a. Shade and protect plants in outside storage areas from the wind and direct sunlight until planted.

b. Heel-in bare root plants.

c. Protect balled and burlapped plants from freezing or drying out by covering the balls or roots with moist burlap, sawdust, wood chips, shredded bark, peat moss, or other approved material. Provide covering which allows air circulation.

d. Keep plants in a moist condition until planted by watering with a fine mist spray.

e. Do not store plant material directly on concrete or bituminous surfaces.

1.5.2.2 Fertilizer, Gypsum, pH Adjusters and Mulch Storage

Store in dry locations away from contaminants.

1.5.2.3 Topsoil

Prior to stockpiling topsoil, eradicate on site undesirable growing vegetation. Clear and grub existing vegetation three to four weeks prior to stockpiling existing topsoil.

1.5.2.4 Root Control Barrier and Weed Control Fabric

Store materials on site in enclosures or under protective covering in dry location. Store under cover out of direct sunlight. Do not store materials directly on ground.

1.5.3 Handling

Do not drop or dump plants from vehicles. Avoid damaging plants being moved from nursery or storage area to planting site. Handle balled and burlapped and container plants carefully to avoid damaging or breaking the earth ball or root structure. Do not handle plants by the trunk or stem. Remove damaged plants from the site.

1.5.4 TIME LIMITATION

Except for container-grown plant material, the time limitation from digging to installing plant material shall be a maximum of 90 days. The time

limitation between installing the plant material and placing the mulch shall be a maximum of 24 hours.

1.6 TIME RESTRICTIONS AND PLANTING CONDITIONS

Coordinate installation of planting materials during optimal planting seasons for each type of plant material required.

1.6.1 Planting Dates

Plant all plants from March 1st to June 1st for spring planting and from September 1st to November 1st for fall planting.

1.6.2 Restrictions

Do not plant when ground is frozen, snow covered, muddy, or when air temperature exceeds 90 degrees Fahrenheit

1.7 GUARANTEE

All plants shall be guaranteed for one year beginning on the date of inspection by the Contracting Officer to commence the plant establishment period, against defects including death and unsatisfactory growth, except for defects resulting from lack of adequate maintenance, neglect, or abuse by the Government or by weather conditions unusual for the warranty period.

Remove and replace dead planting materials immediately unless required to plant in the succeeding planting season. At end of warranty period, replace planting materials that die or have 25 percent or more of their branches that die during the construction operations or the guarantee period.

1.8 SUSTAINABLE DESIGN REQUIREMENTS

1.8.1 Local/Regional Materials

Use materials or products extracted, harvested, or recovered, as well as manufactured, within a 500 mile radius from the project site, if available from a minimum of three sources.

PART 2 PRODUCTS

2.1 PLANTS

2.1.1 Regulations and Varieties

Existing trees and shrubs to remain shall be protected and a planting plan be arranged around them. Furnish nursery stock in accordance with ANSI/ANLA Z60.1, except as otherwise specified or indicated. Each plant or group of planting shall have a "key" number indicated on the nursery certifications of the plant schedule. Furnish plants, including turf grass, grown under climatic conditions similar to those in the locality of the project. Plants specified shall be indigenous, low maintenance varieties, tolerant of site's existing soils and climate without supplemental irrigation or fertilization once established. Plants of the same specified size shall be of uniform size and character of growth. Plants shall be chosen with their mature size and growth habit in mind to avoid over-planting and conflict with other plants, structures or

underground utility lines. All plants shall comply with all Federal and State Laws requiring inspection for plant diseases and infestation.

2.1.2 Shape and Condition

Well-branched, well-formed, sound, vigorous, healthy planting stock free from disease, sunscald, windburn, abrasion, and harmful insects or insect eggs and having a healthy, normal, and undamaged root system.

2.1.2.1 Deciduous Trees and Shrubs

Symmetrically developed and of uniform habit of growth, with straight boles or stems, and free from objectionable disfigurements.

2.1.2.2 Evergreen Trees and Shrubs

Well developed symmetrical tops with typical spread of branches for each particular species or variety.

2.1.2.3 Ground Covers and Vines

Number and length of runners and clump sizes indicated, and of the proper age for the grade of plants indicated, furnished in removable containers, integral containers, or formed homogeneous soil section.

2.1.3 Plant Size

Minimum sizes measured after pruning and with branches in normal position, shall conform to measurements indicated, based on the average width or height of the plant for the species as specified in ANSI/ANLA Z60.1. Plants larger in size than specified may be provided with approval of the Contracting Officer. When larger plants are provided, increase the ball of earth or spread of roots in accordance with ANSI/ANLA Z60.1.

2.1.4 Root Ball Size

All box-grown, field potted, field boxed, collected, plantation grown, bare root, balled and burlapped, container grown, processed-balled, and in-ground fabric bag-grown root balls shall conform to ANSI/ANLA Z60.1. All wrappings and ties shall be biodegradable. Root growth in container grown plants shall be sufficient to hold earth intact when removed from containers. Root bound plants will not be accepted.

2.1.4.1 Mycorrhizal fungi inoculum

Before shipment, root systems shall contain mycorrhizal fungi inoculum.

2.1.5 Growth of Trunk and Crown

2.1.5.1 Deciduous Trees

A height to caliper relationship shall be provided in accordance with ANSI/ANLA Z60.1. Height of branching shall bear a relationship to the size and species of tree specified and with the crown in good balance with the trunk. The trees shall not be "poled" or the leader removed.

a. Single stem: The trunk shall be reasonably straight and symmetrical with crown and have a persistent main leader.

b. Multi-stem: All countable stems, in aggregate, shall average the size specified. To be considered a stem, there shall be no division of the trunk which branches more than 6 inches from ground level.

2.1.5.2 Deciduous Shrubs

Deciduous shrubs shall have the height and number of primary stems recommended by ANSI/ANLA Z60.1. Acceptable plant material shall be well shaped, with sufficient well-spaced side branches, and recognized by the trade as typical for the species grown in the region of the project.

2.1.5.3 Coniferous Evergreen Plant Material

Coniferous Evergreen plant material shall have the height-to-spread ratio recommended by ANSI/ANLA Z60.1. The coniferous evergreen trees shall not be "poled" or the leader removed. Acceptable plant material shall be exceptionally heavy, well shaped and trimmed to form a symmetrical and tightly knit plant. The form of growth desired shall be as indicated.

2.1.5.4 Broadleaf Evergreen Plant Material

Broadleaf evergreen plant material shall have the height-to-spread ratio recommended by ANSI/ANLA Z60.1. Acceptable plant material shall be well shaped and recognized by the trade as typical for the variety grown in the region of the project.

2.1.5.5 Ground Cover and Vine Plant Material

Ground cover and vine plant material shall have the minimum number of runners and length of runner recommended by ANSI/ANLA Z60.1. Plant material shall have heavy, well developed and balanced crown with vigorous, well developed root system and shall be furnished in containers.

2.2 TOPSOIL

2.2.1 Existing Soil

Modify to conform to requirements specified in paragraph entitled "Composition."

2.2.2 On-Site Topsoil

Surface soil stripped and stockpiled on site and modified as necessary to meet the requirements specified for topsoil in paragraph entitled "Composition." When available topsoil shall be existing surface soil stripped and stockpiled on-site in accordance with Section 31 23 00.00 20 EXCAVATION AND FILL.

2.2.3 Off-Site Topsoil

Conform to requirements specified in paragraph entitled "Composition." Additional topsoil shall be furnished by the Contractor.

2.2.4 Composition

Evaluate soil for use as topsoil in accordance with ASTM D5268. From 5 to 10 percent organic matter as determined by the topsoil composition tests of the Organic Carbon, 6A, Chemical Analysis Method described in DOA SSIR 42. Maximum particle size, 3/4 inch, with maximum 3 percent retained on 1/4 inch

screen. The pH shall be tested in accordance with ASTM D4972. Topsoil shall be free of sticks, stones, roots, plants, and other debris and objectionable materials. Other components shall conform to the following limits:

Silt	7 to 17 percent
Clay	4 to 12 percent
Sand	70 to 82 percent
pH	5.5 to 7.0
Soluble Salts	600 ppm maximum

2.3 SOIL CONDITIONERS

Provide singly or in combination as required to meet specified requirements for topsoil. Soil conditioners shall be nontoxic to plants.

2.3.1 Lime

Commercial grade hydrated or burnt limestone containing a calcium carbonate equivalent (C.C.E.) as specified in ASTM C602 of not less than 80 percent.

2.3.2 Aluminum Sulfate

Commercial grade.

2.3.3 Sulfur

100 percent elemental

2.3.4 Iron

100 percent elemental

2.3.5 Sand

Clean and free of materials harmful to plants.

2.3.6 Perlite

Horticultural grade.

2.3.7 Composted Derivatives

Ground bark, nitrolized sawdust, humus or other green wood waste material free of stones, sticks, invasive species, including seeds, and soil stabilized with nitrogen and having the following properties:

2.3.7.1 Particle Size

Minimum percent by weight passing:

No. 4 mesh screen 95
No. 8 mesh screen 80

2.3.7.2 Nitrogen Content

Minimum percent based on dry weight:

Fir Sawdust	0.7
Fir or Pine Bark	1.0

2.3.7.3 Biobased Content

Minimum 100 percent.

2.3.8 Gypsum

Coarsely ground gypsum from recycled scrap gypsum board comprised of calcium sulfate dihydrate 91 percent, calcium 22 percent, sulfur 17 percent; minimum 96 percent passing through 20 mesh screen, 100 percent passing thru 16 mesh screen.

2.4 PLANTING SOIL MIXTURES

Sandy topsoil: one part topsoil to one part peat; clay topsoil: two parts topsoil to one part peat. Thoroughly mix all parts of planting soil mixture to a uniform blend throughout.

2.5 FERTILIZER

Fertilizer for groundcover, wildflowers and grasses is not permitted. Fertilizer for trees, plants, and shrubs shall be as recommended by plant supplier, except synthetic chemical fertilizers are not permitted. Fertilizers containing petrochemical additives or that have been treated with pesticides or herbicides are not permitted.

2.5.1 Granular Fertilizer

Organic, granular controlled release fertilizer containing the following minimum percentages, by weight, of plant food nutrients:

10 percent available nitrogen
10 percent available phosphorus
10 percent available potassium

2.5.2 Fertilizer Tablets

Organic, plant tablets composed of tightly compressed fertilizer chips forming a tablet that is insoluble in water, is designed to provide a continuous release of nutrients for at least 24 months and contains the following minimum percentages, by weight, of plant food nutrients:

20 percent available nitrogen
20 percent available phosphorus
5 percent available potassium

2.6 WEED CONTROL FABRIC

2.6.1 Roll Type Polypropylene or Polyester Mats

Fabric shall be woven, needle punched or non-woven and treated for protection against deterioration due to ultraviolet radiation. Fabric shall be minimum 99 percent opaque to prevent photosynthesis and seed germination

from occurring, yet allowing air, water and nutrients to pass thru to the roots. Minimum weight shall be 5 ounces per square yard with a minimum thickness of 20 mils with a 20 year (minimum) guarantee.

2.7 MULCH

Free from noxious weeds, mold, pesticides, or other deleterious materials.

2.7.1 Inert Mulch Materials (Gravel/ Rock)

Rock mulch shall be stone aggregate 2-4 inches in size. Provide materials from local gravel or stone supplier. Stone color to match split face CMU on building.

2.7.2 Organic Mulch Materials

Double shredded hardwood from site when available. Biobased content shall be a minimum of 100 percent. Wood cellulose fiber shall be processed to contain no growth or germination-inhibiting factors, dyed with non-toxic, biodegradable dye to an appropriate color to facilitate visual metering of materials application. Paper-based hydraulic mulch shall contain a minimum of 100 percent post-consumer recycled content. Wood-based hydraulic mulch shall contain a minimum of 100 percent recycled material.

2.8 STAKING AND GUYING MATERIAL

2.8.1 Staking Material

2.8.1.1 Tree Support Stakes

Rough sawn FSC-certified or salvaged hard wood free of knots, rot, cross grain, bark, long slivers, or other defects that impair strength. Stakes shall be minimum 2 inches square or 2 1/2 inch diameter by 8 feet long, pointed at one end.

2.8.1.2 Ground Stakes

FSC-certified or salvaged wood 2 inches square are by 3 feet long, pointed at one end.

2.8.2 Guying Material

2.8.2.1 Guying Wire

12 gauge annealed galvanized steel, ASTM A580/A580M.

2.8.2.2 Guying Cable

Minimum five-strand, 3/16 inch diameter galvanized steel cable.

2.8.3 Hose Chafing Guards

New or used 2 ply 3/4 inch diameter reinforced rubber or plastic hose, black or dark green, all of same color.

2.8.4 Flags

White surveyor's plastic tape, 12 inches long, fastened to guying wires or cables.

2.8.5 Turnbuckles

Galvanized or cadmium-plated steel with minimum 3 inch long openings fitted with screw eyes. Eye bolts shall be galvanized or cadmium-plated steel with one inch diameter eyes and screw length 1 1/2 inches, minimum.

2.8.6 Deadmen

4 by 8 inch rectangular or 8 inch diameter by36 inch long, wood material.

2.8.7 Metal Anchors

2.8.7.1 Driven Anchors

Malleable iron, arrow shaped, galvanized, sized as follows:

Tree Caliper	Anchor Size
2 inches and under	3 inches
3 to 6 inches	4 inches
6 to 8 inches	6 inches
8 to 10 inches	8 inches
10 to 12 inches	10 inches

2.8.7.2 Screw Anchors

Steel, screw type with welded-on 3 inch round helical steel plate, minimum 3/8 inch diameter, 15 inches long.

2.9 EDGING MATERIAL

2.9.1 Concrete Edging

Cast-in-place 6 by 6 inch concrete mowstrip. Provide tooled contraction joints to a depth of 3/4 inch after the surface has been finished. Provide joints every 20 lineal feet. Provide 1/2 inch thick expansion joints at change of direction and where mowstrip abuts rigid pavement. Provide #4 reinforcement bar and other devices necessary to install and secure reinforcement. Provide a floated finish, then finish with a flexible bristle broom. 2500 psi compressive concrete strength at 28 days as specified under Section 03 30 00 CAST-IN-PLACE CONCRETE.

2.10 EROSION CONTROL MATERIALS

Erosion control material shall conform to the following:

2.10.1 Erosion Control Fabric

Fabric shall be knitted construction of polypropylene yarn with uniform mesh openings 3/4 to 1 inch square with strips of biodegradable paper. Filler paper strips shall have a minimum life of 6 months.

2.10.2 Erosion Control Material Anchors

Erosion control anchors shall be as recommended by the manufacturer.

2.11 ROOT CONTROL BARRIER

Pre-formed, linear barrier with integral vertical root deflecting ribs constructed of ultraviolet resistant polypropylene material. Color to be black.

2.12 WATER

Source of water to be approved by Contracting Officer and suitable quality for irrigation and shall not contain elements toxic to plant life, including acids, alkalis, salts, chemical pollutants, and organic matter. Use collected storm water or graywater when available.

2.12.1 Hose

Hoses used for watering shall be a minimum of 30 percent post-consumer rubber or plastic.

2.13 SOURCE QUALITY CONTROL

The Contracting Officer and Landscape Architect of Record will inspect plant materials at the project site and approve them. Tag plant materials for size and quality.

PART 3 EXECUTION

3.1 EXTENT OF WORK

Provide soil preparation, fertilizing, tree, shrub, groundcover, planting, edging, staking and guying, weed control fabric, erosion control material, root control barrier installation and a mulch topdressing of all newly graded finished earth surfaces, unless indicated otherwise, and at all areas inside or outside the limits of construction that are disturbed by the Contractor's operations.

3.2 ALTERNATIVE HERBICIDE TREATMENT (SOLARIZING SOIL)

Within 48 hours of subsoil preparation, saturate soil with water to a depth of 3 feet. Immediately stake polyethylene sheeting over area to be planted. Stake tightly to surface of soil. Maintain sheeting in place for a minimum of 6 weeks. Immediately after removing sheeting, cover area to be planted with topsoil. Do not till soil prior to applying topsoil.

3.3 PREPARATION

3.3.1 Protection

Protect existing and proposed landscape features, elements, and sites from damage or contamination. Protect trees, vegetation, and other designated features by erecting high-visibility, reusable construction fencing. Locate fence no closer to trees than the drip line. Plan equipment and vehicle access to minimize and confine soil disturbance and compaction to areas indicated on Drawings.

3.3.2 Layout

Stake out approved plant material locations and planter bed outlines on the project site before digging plant pits or beds. The Contracting Officer reserves the right to adjust plant material locations to meet field conditions. Do not plant closer than 2/3 of any plants mature width from any building wall, pavement edge, fence or wall edge and other similar structures. Provide on-site locations for excavated rock, soil, and vegetation.

3.3.3 Erosion Control

Provide erosion control and seeding with native plant species to protect slopes.

3.3.4 Soil Preparation

3.3.4.1 pH Adjuster Application Rates

Apply pH adjuster at rates as determined by laboratory soil analysis of the soils at the job site. For bidding purposes only apply at rates for the following:

3.3.4.2 Fertilizer Application Rates

Apply fertilizer at rates as determined by laboratory soil analysis of the soils at the job site. For bidding purposes only apply at rates for the following:

Fertilizer Tablets for Trees and Shrubs			
	Container/Caliper Size	Tablet Size	No. of Tablets
Shrub:	3 gallon	1/2"	4
Tree:	2"	1/2"	18

3.3.5 Root Control Barrier

Install linear polypropylene barrier a minimum 1/2 inch above finish grade to prevent root growth over the barrier. Backfill the outside of the barrier with 3/4 to one gravel a minimum width of 2 inches. For linear barrier application use appropriate device to connect two pieces.

3.4 PLANT BED PREPARATION

Verify location of underground utilities prior to excavation. Protect existing adjacent turf before excavations are made. Do not disturb topsoil and vegetation in areas outside those indicated on Drawings. Where planting beds occur in existing turf areas, remove turf to a depth that will ensure removal of entire root system. Measure depth of plant pits from finished grade. Depth of plant pit excavation shall be as indicated and provide proper relation between top of root ball and finished grade. Install plant material as specified in paragraph entitled "Plant Installation." Do not install trees within 10 feet of any utility lines or building walls.

3.5 PLANT INSTALLATION

3.5.1 Individual Plant Pit Excavation

Excavate pits at least twice as largein diameter as the size of ball or container to depth shown.

3.5.2 Plant Beds with Multiple Plants

Excavate plant beds continuously throughout entire bed as outlined to depth shown.

3.5.3 Handling and Setting

Move plant materials only by supporting the root ball or container. Set plants on native soil and hold plumb in the center of the pit until soil has been tamped firmly around root ball. Set plant materials, in relation to surrounding finish grade, one to 2 inches above depth at which they were grown in the nursery, collecting field or container. Replace plant material whose root balls are cracked or damaged either before or during the planting process.

Plant material shall be set in plant beds according to the drawings. Backfill soil mixture shall be placed on previously scarified subsoil to completely surround the root balls, and shall be brought to a smooth and even surface, blending to existing areas.

3.5.3.1 Balled and Burlapped Stock

Backfill with prepared soil mixture to approximately half the depth of ball and then tamp and water. Carefully remove or fold back excess burlap and tying materials from the top a minimum 1/3 depth from the top of the rootball. Tamp and complete backfill, place mulch topdressing, and water. Remove wires and non-biodegradable materials from plant pit prior to backfill operations.

3.5.3.2 Bare-Root Stock

Plant so roots are arranged in a natural position. Place roots in water a minimum of 30 minutes prior to planting. Carefully work prepared soil mixture among roots. Tamp remainder of backfill, place mulch topdressing and water.

3.5.3.3 Container Grown Stock

Remove from container and prevent damage to plant or root system.

3.5.3.4 Ground Covers

Smooth planting areas before planting to provide even, smooth finish. Plant after placing weed control fabric. Do not remove plant material from flats or containers until immediately before planting. Space at the intervals indicated. Plant at a depth to sufficiently cover all roots. Start watering areas planted as required by temperature and wind conditions. Apply water at a rate sufficient to ensure thorough wetting of soil to a depth of 6 inches without run off or puddling. Add mulch topdressing as needed.

3.5.4 Earth Mounded Watering Basin for Individual Plant Pits

Form with topsoil around each plant by replacing a mound of topsoil around the edge of each plant pit. Watering basins shall be 6 inches deep for trees and 4 inches deep for shrubs. Eliminate basins around plants in plant beds containing multiple plants.

3.5.5 Weed Control Fabric Installation

Remove grass and weed vegetation, including roots, from within the area enclosed by edging. Completely cover areas enclosed by edging with specified weed control fabric prior to placing mulch layer. Overlap cut edges 6 inches.

3.5.6 Erosion Control Material

Install in accordance with manufacturer's instructions.

3.5.7 Placement of Mulch Topdressing

Place specified mulch topdressing on top of weed control fabric covering total area enclosed by edging. Place mulch topdressing to a depth of 3 inches.

3.5.8 Mulch Topdressing

Provide mulch topdressing over entire planter bed surfaces and individual plant surfaces including earth mound watering basin around plants to a depth of 3 inches after completion of plant installation and before watering. Keep mulch out of the crowns of shrubs. Place mulch a minimum 2 to 3 inches away from trunk of shrub or tree. Place on top of any weed control fabric.

3.5.9 Installation of Edging

Uniformly edge beds of plants to provide a clear cut division line between planted area and adjacent lawn. Construct bed shapes as indicated. Install concrete edging material as indicated. Install edging material in a perfect 4 foot diameter circle inside the 4 1/2 foot watering basin, around individual specimen trees and shrubs not planted in a close group. Install edging with minimum one inch left above ground level.

3.5.10 Fertilization

3.5.10.1 Fertilizer Tablets

Place fertilizer planting tablets evenly spaced around the plant pits to the manufacturer's recommended depth.

3.5.10.2 Granular Fertilizer

Apply granular fertilizer as a top coat prior to placing mulch layer and water thoroughly.

3.5.11 Watering

Start watering areas planted as required by temperature and wind conditions. Slow deep watering shall be used. Apply water at a rate sufficient to ensure thorough wetting of soil to a depth of 12 inches

without run off or puddling. Watering of other plant material or adjacent areas shall be prevented.

3.5.12 Staking and Guying

3.5.12.1 Staking

Stake plants with the number of stakes indicated complete with double strand of 12 gage guy wire as detailed. Attach guy wire half the tree height but not more than 5 feet high. Drive stakes to a depth of 2 1/2 to 3 feet into the ground outside the plant pit. Do not injure the root ball. Use hose chafer guards where guy wire comes in contact with tree trunk.

3.5.12.2 Guying

Guy plants as indicated. Attach two strands of guying wire around the tree trunk at an angle of 45 degrees at approximately 1/2 of the trunk height. Protect tree trunks with chafing guards where guying wire contacts the tree trunk. Anchor guys to wood ground stakes. Fasten flags to each guying wire approximately 2/3 of the distance up from ground level. Provide turnbuckles as indicated.

3.5.12.3 Chafing Guards

Use hose chafing guards, as specified where guy wire will contact the plant.

3.5.12.4 Deadmen

Place deadmen minimum 18 inches below ground surface. Place equal distance from tree trunk and around the plant pit.

3.5.12.5 Wood Ground Stakes

Drive wood ground stakes into firm ground outside of plant pit with top of stake flush with ground. Place equal distance from tree trunk and around the plant pit.

3.5.12.6 Iron Anchors

Drive malleable iron anchors into firm ground outside of plant pit a minimum 30 inches below finish grade. Place equal distance from tree trunk and around the plant pit.

3.5.12.7 Steel Screw Anchors

Insert steel screw anchors as recommended in manufacturer's data. Place equal distance from tree trunk and around the plant pit.

3.5.12.8 Flags

Securely fasten flags on each guy wire approximately two-thirds of the distance up from ground level.

3.5.13 Pruning

Prune in accordance with safety requirement of TCIA Z133.1.

3.5.13.1 Trees and Shrubs

Remove dead and broken branches. Prune to correct structural defects only. Retain typical growth shape of individual plants with as much height and spread as practical. Do not cut central leader on trees. Make cuts with sharp instruments. Do not flush cut with trunk or adjacent branches. Collars shall remain in place. Pruning shall be accomplished by trained and experienced personnel and shall be accordance with TCIA A300P1.

3.5.13.2 Wound Dressing

Do not apply tree wound dressing to cuts.

3.6 RESTORATION AND CLEAN UP

3.6.1 Restoration

Turf areas, pavements and facilities that have been damaged from the planting operation shall be restored to original condition at the Contractor's expense.

3.6.2 Clean Up

Excess and waste material shall be removed from the installed area and shall be disposed offsite at an approved landfill, recycling center, or composting center. Separate and recycle or reuse the following landscape waste materials: nylon straps, wire, ball wrap, burlap, wood stakes. Adjacent paved areas shall be cleared and swept clean.

-- End of Section --

SECTION 33 11 00

WATER DISTRIBUTION
02/11

PART 1 GENERAL

1.1 REFERENCES

The publications listed below form a part of this specification to the extent referenced. The publications are referred to within the text by the basic designation only.

AMERICAN WATER WORKS ASSOCIATION (AWWA)

AWWA B300	(2010; Addenda 2011) Hypochlorites
AWWA B301	(2010) Liquid Chlorine
AWWA C104/A21.4	(2013) Cement-Mortar Lining for Ductile-Iron Pipe and Fittings for Water
AWWA C110/A21.10	(2012) Ductile-Iron and Gray-Iron Fittings for Water
AWWA C111/A21.11	(2012) Rubber-Gasket Joints for Ductile-Iron Pressure Pipe and Fittings
AWWA C115/A21.15	(2011) Flanged Ductile-Iron Pipe With Ductile-Iron or Gray-Iron Threaded Flanges
AWWA C151/A21.51	(2009) Ductile-Iron Pipe, Centrifugally Cast, for Water
AWWA C153/A21.53	(2011) Ductile-Iron Compact Fittings for Water Service
AWWA C500	(2009) Metal-Seated Gate Valves for Water Supply Service
AWWA C502	(2005) Dry-Barrel Fire Hydrants
AWWA C509	(2009) Resilient-Seated Gate Valves for Water Supply Service
AWWA C515	(2009) Reduced-Wall, Resilient-Seated Gate Valves for Water Supply Service
AWWA C600	(2010) Installation of Ductile-Iron Water Mains and Their Appurtenances
AWWA C605	(2013) Underground Installation of Polyvinyl Chloride (PVC) Pressure Pipe and Fittings for Water
AWWA C651	(2005; Errata 2005) Standard for Disinfecting Water Mains

AWWA C800	(2012) Underground Service Line Valves and Fittings
AWWA C900	(2007; Errata 2008) Polyvinyl Chloride (PVC) Pressure Pipe, and Fabricated Fittings, 4 In. Through 12 In. (100 mm Through 300 mm), for Water Distribution
AWWA C905	(2010; Errata 2012) Polyvinyl Chloride (PVC) Pressure Pipe and Fabricated Fittings 14 In. Through 48 In. (350 mm through 1,200 mm) for Water Transmission and Distribution
AWWA M23	(2002; 2nd Ed) Manual: PVC Pipe - Design and Installation

ASME INTERNATIONAL (ASME)

ASME B16.1	(2010) Gray Iron Pipe Flanges and Flanged Fittings Classes 25, 125, and 250
ASME B16.15	(2013) Cast Copper Alloy Threaded Fittings Classes 125 and 250
ASME B16.18	(2012) Cast Copper Alloy Solder Joint Pressure Fittings
ASME B16.22	(2013) Standard for Wrought Copper and Copper Alloy Solder Joint Pressure Fittings
ASME B16.26	(2013) Standard for Cast Copper Alloy Fittings for Flared Copper Tubes
ASME B18.2.2	(2010) Nuts for General Applications: Machine Screw Nuts, Hex, Square, Hex Flange, and Coupling Nuts (Inch Series)
ASME B18.5.2.1M	(2006; R 2011) Metric Round Head Short Square Neck Bolts
ASME B18.5.2.2M	(1982; R 2010) Metric Round Head Square Neck Bolts

ASTM INTERNATIONAL (ASTM)

ASTM A307	(2012) Standard Specification for Carbon Steel Bolts and Studs, 60 000 PSI Tensile Strength
ASTM A47/A47M	(1999; R 2014) Standard Specification for Ferritic Malleable Iron Castings
ASTM A536	(1984; R 2009) Standard Specification for Ductile Iron Castings
ASTM A563	(2007a; R2014) Standard Specification for Carbon and Alloy Steel Nuts

ASTM B42	(2010) Standard Specification for Seamless Copper Pipe, Standard Sizes
ASTM B61	(2008; R 2013) Standard Specification for Steam or Valve Bronze Castings
ASTM B62	(2009) Standard Specification for Composition Bronze or Ounce Metal Castings
ASTM B88	(2009) Standard Specification for Seamless Copper Water Tube
ASTM C94/C94M	(2014b) Standard Specification for Ready-Mixed Concrete
ASTM D2774	(2012) Underground Installation of Thermoplastic Pressure Piping
ASTM D2855	(1996; R 2010) Standard Practice for Making Solvent-Cemented Joints with Poly(Vinyl Chloride) (PVC) Pipe and Fittings
ASTM D3139	(1998; R 2011) Joints for Plastic Pressure Pipes Using Flexible Elastomeric Seals
ASTM F402	(2005; R 2012) Safe Handling of Solvent Cements, Primers, and Cleaners Used for Joining Thermoplastic Pipe and Fittings
ASTM F477	(2010) Standard Specification for Elastomeric Seals (Gaskets) for Joining Plastic Pipe

MANUFACTURERS STANDARDIZATION SOCIETY OF THE VALVE AND FITTINGS INDUSTRY (MSS)

MSS SP-80	(2013) Bronze Gate, Globe, Angle and Check Valves

NATIONAL FIRE PROTECTION ASSOCIATION (NFPA)

NFPA 24	(2013) Standard for the Installation of Private Fire Service Mains and Their Appurtenances
NFPA 704	(2012) Standard System for the Identification of the Hazards of Materials for Emergency Response

UNDERWRITERS LABORATORIES (UL)

UL 246	(2011; Reprint Feb 2013) Hydrants for Fire-Protection Service
UL 262	(2004; Reprint Oct 2011) Gate Valves for Fire-Protection Service
UL 789	(2004; Reprint Feb 2013) Standard for

Indicator Posts for Fire-Protection Service

UNI-BELL PVC PIPE ASSOCIATION (UBPPA)

UBPPA UNI-PUB-08 (2010) Tapping Guide for PVC Pressure Pipe)

1.2 DESIGN REQUIREMENTS

1.2.1 Water Distribution Mains

Provide water distribution mains indicated as 4 through 12 inch diameter pipe sizes of ductile-iron polyvinyl chloride (PVC) plastic pipe. Provide ductile iron pipe for 12 inch diameter or larger pipe sizes. Also provide water main accessories, gate valves and check valves as specified and where indicated.

1.2.2 Water Service Lines

Provide water service lines indicated as less than 4 inch lines from water distribution main to building service at the point indicated. Water service lines shall be . Provide water service line appurtenances as specified and where indicated.

1.3 SUBMITTALS

Government approval is required for submittals with a "G" designation; submittals not having a "G" designation are for Contractor Quality Control approval. The following shall be submitted in accordance with Section 01 33 00 SUBMITTAL PROCEDURES:

SD-03 Product Data

Piping Materials

Water distribution main piping, fittings, joints, valves, and coupling

Water service line piping, fittings, joints, valves, and coupling

Hydrants

Indicator posts

Corporation stops

Valve boxes

Submit manufacturer's standard drawings or catalog cuts, except submit both drawings and cuts for push-on and rubber-gasketed bell-and-spigot joints. Include information concerning gaskets with submittal for joints and couplings.

SD-06 Test Reports

Bacteriological Disinfection; G.

Test results from commercial laboratory verifying disinfection

SD-07 Certificates

Water distribution main piping, fittings, joints, valves, and coupling

Water service line piping, fittings, joints, valves, and coupling

Shop-applied lining

Lining

Fire hydrants

Certificates shall attest that tests set forth in each applicable referenced publication have been performed, whether specified in that publication to be mandatory or otherwise and that production control tests have been performed at the intervals or frequency specified in the publication. Other tests shall have been performed within 3 years of the date of submittal of certificates on the same type, class, grade, and size of material as is being provided for the project.

SD-08 Manufacturer's Instructions

Delivery, storage, and handling

Installation procedures for water piping

1.4 DELIVERY, STORAGE, AND HANDLING

1.4.1 Delivery and Storage

Inspect materials delivered to site for damage. Unload and store with minimum handling. Store materials on site in enclosures or under protective covering. Store plastic piping, jointing materials and rubber gaskets under cover out of direct sunlight. Do not store materials directly on the ground. Keep inside of pipes, fittings, valves and hydrants free of dirt and debris.

1.4.2 Handling

Handle pipe, fittings, valves, hydrants, and other accessories in a manner to ensure delivery to the trench in sound undamaged condition. Take special care to avoid injury to coatings and linings on pipe and fittings; make repairs if coatings or linings are damaged. Do not place any other material or pipe inside a pipe or fitting after the coating has been applied. Carry, do not drag pipe to the trench. Use of pinch bars and tongs for aligning or turning pipe will be permitted only on the bare ends of the pipe. The interior of pipe and accessories shall be thoroughly cleaned of foreign matter before being lowered into the trench and shall be kept clean during laying operations by plugging or other approved method. Before installation, the pipe shall be inspected for defects. Material found to be defective before or after laying shall be replaced with sound material without additional expense to the Government. Store rubber gaskets that are not to be installed immediately, under cover out of direct sunlight.

1.4.2.1 Miscellaneous Plastic Pipe and Fittings

Handle Polyvinyl Chloride (PVC), pipe and fittings in accordance with the

manufacturer's recommendations. Store plastic piping and jointing materials that are not to be installed immediately under cover out of direct sunlight.

Storage facilities shall be classified and marked in accordance with NFPA 704.

PART 2 PRODUCTS

2.1 WATER DISTRIBUTION MAIN MATERIALS

2.1.1 Piping Materials

2.1.1.1 Ductile-Iron Piping

a. Pipe and Fittings: Pipe, except flanged pipe, AWWA C151/A21.51, Pressure Class 350. Flanged pipe, AWWA C115/A21.15. Fittings, AWWA C110/A21.10 or AWWA C153/A21.53; fittings with push-on joint ends conforming to the same requirements as fittings with mechanical-joint ends, except that the bell design shall be modified, as approved, for push-on joint. Fittings shall have pressure rating at least equivalent to that of the pipe. Ends of pipe and fittings shall be suitable for the specified joints. Pipe and fittings shall have cement-mortar lining, AWWA C104/A21.4, standard thickness.

b. Joints and Jointing Material:

(1) Joints: Joints for pipe and fittings shall be . Joints made with sleeve-type mechanical coupling may be used in lieu of push-on joint, subject to the limitations specified in paragraph entitled "Sleeve-Type Mechanical Couplings."

(2) Push-On Joints: Shape of pipe ends and fitting ends, gaskets, and lubricant for joint assembly, AWWA C111/A21.11.

(3) Mechanical Joints: Dimensional and material requirements for pipe ends, glands, bolts and nuts, and gaskets, AWWA C111/A21.11.

(4) Flanged Joints: Bolts, nuts, and gaskets for flanged connections as recommended in the Appendix to AWWA C115/A21.15. Flange for setscrewed flanges shall be of ductile iron, ASTM A536, Grade 65-45-12, and conform to the applicable requirements of ASME B16.1, Class 250. Setscrews for setscrewed flanges shall be 190,000 psi tensile strength, heat treated and zinc-coated steel. Gasket and lubricants for setscrewed flanges, in accordance with applicable requirements for mechanical-joint gaskets specified in AWWA C111/A21.11. Design of setscrewed gasket shall provide for confinement and compression of gasket when joint to adjoining flange is made.

(5) Insulating Joints: Designed to effectively prevent metal-to-metal contact at the joint between adjacent sections of piping. Joint shall be of the flanged type with insulating gasket, insulating bolt sleeves, and insulating washers. Gasket shall be of the dielectric type, full face, and in other respects as recommended in the Appendix to AWWA C115/A21.15. Bolts and nuts, as recommended in the Appendix to AWWA C115/A21.15.

(6) Sleeve-Type Mechanical Coupled Joints: As specified in paragraph

entitled "Sleeve-Type Mechanical Couplings."

2.1.1.2 Polyvinyl Chloride (PVC) Plastic Piping

a. Pipe and Fittings: Pipe, AWWA C900, shall be plain end or gasket bell end, Pressure Class 150 (DR 18) with cast-iron-pipe-equivalent OD.

b. Pipe 14 through 36 diameter: AWWA C905.

c. Fittings for PVC pipe: Fittings shall be gray iron or ductile iron, AWWA C110/A21.10 or AWWA C153/A21.53, and have cement-mortar lining, AWWA C104/A21.4, standard thickness. Fittings with push-on joint ends shall conform to the same requirements as fittings with mechanical-joint ends, except that bell design shall be modified, as approved, for push-on joint suitable for use with PVC plastic pipe specified in this paragraph. Iron fittings and specials shall be cement-mortar lined in accordance with AWWA C104/A21.4.

d. Joints and Jointing Material: Joints for pipe shall be push-on joints, ASTM D3139. Joints between pipe and metal fittings, valves, and other accessories shall be push-on joints ASTM D3139, or compression-type joints/mechanical joints, ASTM D3139 and AWWA C111/A21.11. Provide each joint connection with an elastomeric gasket suitable for the bell or coupling with which it is to be used. Gaskets for push-on joints for pipe, ASTM F477. Gaskets for push-on joints and compression-type joints/mechanical joints for joint connections between pipe and metal fittings, valves, and other accessories, AWWA C111/A21.11, respectively, for push-on joints and mechanical joints. Mechanically coupled joints using a sleeve-type mechanical coupling, as specified in paragraph entitled "Sleeve-Type Mechanical Couplings," may be used as an optional jointing method in lieu of push-on joints on plain-end PVC plastic pipe, subject to the limitations specified for mechanically coupled joints using a sleeve-type mechanical coupling and to the use of internal stiffeners as specified for compression-type joints in ASTM D3139.

2.1.2 Valves, Hydrants, and Other Water Main Accessories

2.1.2.1 Gate Valves on Buried Piping

AWWA C500, AWWA C509, AWWA C515,or UL 262. Unless otherwise specified, valves conforming to: (1) AWWA C500 shall be nonrising stem type with double-disc gates and mechanical-joint ends or push-on joint ends as appropriate for the adjoining pipe, (2) AWWA C509 or AWWA C515 shall be nonrising stem type with mechanical-joint ends or resilient-seated gate valves 3 to 12 inches in size, and (3) UL 262 shall be inside-screw type with operating nut, double-disc or split-wedge type gate, designed for a hydraulic working pressure of 350 psi, and shall have mechanical-joint ends or push-on joint ends as appropriate for the pipe to which it is joined. Materials for UL 262 valves shall conform to the reference standards specified in AWWA C500. Valves shall open by counterclockwise rotation of the valve stem. Stuffing boxes shall have 0-ring stem seals, except for those valves for which gearing is specified, in which case use conventional packing in place of 0-ring seal. Stuffing boxes shall be bolted and constructed so as to permit easy removal of parts for repair. In lieu of mechanical-joint ends and push-on joint ends, valves may have special ends for connection to sleeve-type mechanical coupling. Valve ends and gaskets for connection to cement piping or to sleeve-type mechanical coupling shall conform to the applicable requirements specified respectively for the joint

or coupling. Where a post indicator is shown, the valve shall have an indicator post flange; indicator post flange for AWWA C500 valve shall conform to the applicable requirements of UL 262. Valves shall be of one manufacturer.

2.1.2.2 Gate Valves in Valve Pit(s) and Aboveground Location

AWWA C500, AWWA C509, AWWA C515, or UL 262. Unless otherwise specified, valves conforming to: (1) AWWA C500 shall be outside-screw-and-yoke rising-stem type with double-disc gates and flanged ends, (2) AWWA C509 or AWWA C515 shall be outside-screw-and-yoke rising-stem type with flanged ends, and (3) UL 262 shall be outside-screw-and-yoke type, shall have double-disc or split-wedge type gate and flanged ends, and shall be designed for a hydraulic working pressure of 150 psi. Materials for UL 262 valves shall conform to the reference standards specified in AWWA C500. Valves shall be nonrising stem type or inside-screw type where indicated. Valves shall have solid-wedge gates or solid or one-piece type gates where indicated. Provide valves with handwheels that open by counterclockwise rotation of the valve stem. Stuffing boxes shall be bolted and constructed so as to permit easy removal of parts for repair. Valves shall be of one manufacturer.

2.1.2.3 Fire Hydrants

Dry-barrel type. Paint hydrants with at least one coat of primer and two coats of enamel paint. Barrel and bonnet colors shall be in accordance with UFC 3-600-01. Stencil hydrant number and main size on the hydrant barrel using black stencil paint.

a. Dry-Barrel Type Fire Hydrants: Dry-barrel type hydrants, AWWA C502 or UL 246, "Base Valve" design, shall have 6 inch inlet, 5 1/4 inch valve opening, one 4 1/2 inch pumper connection, and two 2 1/2 inch hose connections. Inlet shall have mechanical-joint end only; end shall conform to the applicable requirements as specified for the joint. Size and shape of operating nut, cap nuts, and threads on hose and pumper connections shall be as specified in AWWA C502 or UL 246 . Hydrants indicated as "traffic type," shall have frangible sections as mentioned in AWWA C502. The traffic type hydrant shall have special couplings joining upper and lower sections of hydrant barrel and shall be designed to have the special couplings break from a force not less than that which would be imposed by a moving vehicle; hydrant shall operate properly under normal conditions.

2.1.2.4 Indicator Posts

UL 789. Provide for gate valves where indicated.

2.1.2.5 Valve Boxes

Provide a valve box for each gate valve on buried piping, except where indicator post is shown. Valve boxes shall be of cast iron of a size suitable for the valve on which it is to be used and shall be adjustable. Cast-iron boxes shall have a minimum cover and wall thickness of 3/16 inch. Provide a round head. Cast the word "WATER" on the lid. The least diameter of the shaft of the box shall be 5 1/4 inches. Cast-iron box shall have a heavy coat of bituminous paint.

2.1.2.6 Sleeve-Type Mechanical Couplings

Couplings shall be designed to couple plain-end piping by compression of a ring gasket at each end of the adjoining pipe sections. The coupling shall consist of one middle ring flared or beveled at each end to provide a gasket seat; two follower rings; two resilient tapered rubber gaskets; and bolts and nuts to draw the follower rings toward each other to compress the gaskets. The middle ring and the follower rings shall be true circular sections free from irregularities, flat spots, and surface defects; the design shall provide for confinement and compression of the gaskets. Malleable and ductile iron shall, conform to ASTM A47/A47M and ASTM A536, respectively. Gaskets shall be designed for resistance to set after installation and shall meet the applicable requirements specified for gaskets for mechanical joint in AWWA C111/A21.11. Bolts shall be track-head type, ASTM A307, Grade A, with nuts, ASTM A563, Grade A; or round-head square-neck type bolts, ASME B18.5.2.1M and ASME B18.5.2.2M with hex nuts, ASME B18.2.2. Bolts shall be 5/8 inch in diameter; minimum number of bolts for each coupling shall be 5 for 6 inch pipe, 6 for 8 inch pipe, and 8 for 12 inch pipe. Bolt holes in follower rings shall be of a shape to hold fast the necks of the bolts used. Mechanically coupled joints using a sleeve-type mechanical coupling shall not be used as an optional method of jointing except where pipeline is adequately anchored to resist tension pull across the joint. Mechanical couplings shall provide a tight flexible joint under all reasonable conditions, such as pipe movements caused by expansion, contraction, slight setting or shifting in the ground, minor variations in trench gradients, and traffic vibrations. Couplings shall be of strength not less than the adjoining pipeline.

2.1.2.7 Tracer Wire for Nonmetallic Piping

Provide bare copper or aluminum wire not less than 0.10 inch in diameter in sufficient length to be continuous over each separate run of nonmetallic pipe.

2.2 WATER SERVICE LINE MATERIALS

2.2.1 Piping Materials

2.2.1.1 Copper Pipe and Associated Fittings

Pipe, ASTM B42, regular, threaded ends. Fittings shall be brass or bronze, ASME B16.15, 125 pound.

2.2.1.2 Copper Tubing and Associated Fittings

Tubing, ASTM B88, Type K. Fittings for solder-type joint, ASME B16.18 or ASME B16.22; fittings for compression-type joint, ASME B16.26, flared tube type.

2.2.1.3 Ductile-Iron Piping

Comply with "Ductile-Iron Piping" subparagraph under paragraph "Water Distribution Main Materials."

2.2.1.4 Insulating Joints

Joints between pipe of dissimilar metals shall have a rubber-gasketed or other suitable approved type of insulating joint or dielectric coupling which will effectively prevent metal-to-metal contact between adjacent

sections of piping.

2.2.2 Water Service Line Appurtenances

2.2.2.1 Corporation Stops

Ground key type; bronze, ASTM B61 or ASTM B62; and suitable for the working pressure of the system. Ends shall be suitable for solder-joint, or flared tube compression type joint. Threaded ends for inlet and outlet of corporation stops, AWWA C800; coupling nut for connection to flared copper tubing, ASME B16.26.

2.2.2.2 Curb or Service Stops

Ground key, round way, inverted key type; made of bronze, ASTM B61 or ASTM B62; and suitable for the working pressure of the system. Ends shall be as appropriate for connection to the service piping. Arrow shall be cast into body of the curb or service stop indicating direction of flow.

2.2.2.3 Service Clamps

Service clamps used for repairing damaged cast-iron, steel, PVC or asbestos-cement pipe shall have a pressure rating not less than that of the pipe to be connected and shall be either the single or double flattened strap type. Clamps shall have a galvanized malleable-iron body with cadmium plated straps and nuts. Clamps shall have a rubber gasket cemented to the body.

2.2.2.4 Goosenecks

Type K copper tubing. Joint ends for goosenecks shall be appropriate for connecting to corporation stop and service line. Where multiple gooseneck connections are required for an individual service, goosenecks shall be connected to the service line through a suitable approved brass or bronze branch connection; the total clear area of the branches shall be at least equal to the clear area of the service line. Length of goosenecks shall be in accordance with standard practice.

2.2.2.5 Dielectric Fittings

Dielectric fittings shall be installed between threaded ferrous and nonferrous metallic pipe, fittings and valves, except where corporation stops join mains. Dielectric fittings shall prevent metal-to-metal contact of dissimilar metallic piping elements and shall be suitable for the required working pressure.

2.2.2.6 Gate Valves Smaller than 3 Inch in Size on Buried Piping

Gate valves smaller than 3 inch size on Buried Piping MSS SP-80, Class 150, solid wedge, nonrising stem. Valves shall have flanged or threaded end connections, with a union on one side of the valve. Provide handwheel operators.

2.2.2.7 Curb Boxes

Provide a curb box for each curb or service stop. Curb boxes shall be of cast iron of a size suitable for the stop on which it is to be used. Provide a round head. Cast the word "WATER" on the lid. Each box shall have a heavy coat of bituminous paint.

2.2.2.8 Valve Boxes

Provide a valve box for each gate valve on buried piping. Valve boxes shall be of cast iron of a size suitable for the valve on which it is to be used and shall be adjustable. Provide a round head. Cast the word "WATER" on the lid. The least diameter of the shaft of the box shall be 5 1/4 inches. Cast-iron box shall have a heavy coat of bituminous paint.

2.2.2.9 Tapping Sleeves

Tapping sleeves of the sizes indicated for connection to existing main shall be the cast gray, ductile, or malleable iron, split-sleeve type with flanged or grooved outlet, and with bolts, follower rings and gaskets on each end of the sleeve. Construction shall be suitable for a maximum working pressure of 150 psi. Bolts shall have square heads and hexagonal nuts. Longitudinal gaskets and mechanical joints with gaskets shall be as recommended by the manufacturer of the sleeve. When using grooved mechanical tee, it shall consist of an upper housing with full locating collar for rigid positioning which engages a machine-cut hole in pipe, encasing an elastomeric gasket which conforms to the pipe outside diameter around the hole and a lower housing with positioning lugs, secured together during assembly by nuts and bolts as specified, pretorqued to 50 foot-pound.

2.2.2.10 Disinfection

Chlorinating materials shall conform to the following:

Chlorine, Liquid: AWWA B301.

Hypochlorite, Calcium and Sodium: AWWA B300.

PART 3 EXECUTION

3.1 INSTALLATION OF PIPELINES

3.1.1 General Requirements for Installation of Pipelines

These requirements shall apply to all pipeline installation except where specific exception is made in the "Special Requirements..." paragraphs.

3.1.1.1 Location of Water Lines

Terminate the work covered by this section at a point approximately 5 feet from the building. Do not lay water lines in the same trench with gas lines fuel lines or electric wiring.

a. Water Piping Installation Parallel With Sewer Piping

Normal Conditions: Lay water piping at least 10 feet horizontally from a sewer or sewer manhole whenever possible. Measure the distance edge-to-edge.

(1) The bottom (invert) of the water piping shall be at least 18 inches above the top (crown) of the sewer piping.

(2) Where this horizontal or vertical separation cannot be obtained, both the sewer and water piping shall be constructed of AWWA-approved ductile iron water pipe and joints for 10-feet on

each side of the area not complying with the minimum horizontal and vertical separation. Sewer shall be pressure tested in place without leakage prior to backfilling. Approved waste water disposal method shall be utilized.

(3) The sewer manhole shall be of watertight construction and tested in place.

b. Installation of Water Piping Crossing Sewer Piping

(1) Normal Conditions: Water piping crossing above sewer piping shall be laid to provide a separation of at least 18 inches between the bottom of the water piping and the top of the sewer piping.

(2) Unusual Conditions: When local conditions prevent a vertical separation described above, use the following construction:

(a) Sewer piping passing over or under water piping shall be constructed of AWWA-approved ductile iron water piping, pressure tested in place without leakage prior to backfilling.

(b) Where it is not possible to maintain an 18 inch vertical separation between the bottom of the water piping and the top of the sewer piping, both the water main and the sewer line shall be constructed of AWWA-approved ductile iron and with joints for a distance of 10 feet on each side of the point of crossing.

(c) Whenever it is necessary for a water main to cross under a sewer, both the water main and the sewer line shall be constructed of AWWA-approved ductile iron and with joints for a distance of 10 feet on each side of the point of crossing. A section of water main pipe shall be centered at the point of crossing. Water piping passing under sewer piping shall, in adition, be protected by providing a vertical separation of at least 18 inches between the bottom of the sewer piping and the top of water piping with adequate structural support for the sewer piping to prevent excessive deflection of the joints and the settling on and breaking of the water piping.

c. Sewer Piping or Sewer Manholes: No water piping shall pass through or come in contact with any part of a sewer manhole.

3.1.1.2 Earthwork

Perform earthwork operations in accordance with Section 31 23 00.00 20 EXCAVATION AND FILL.

3.1.1.3 Pipe Laying and Jointing

Remove fins and burrs from pipe and fittings. Before placing in position, clean pipe, fittings, valves, and accessories, and maintain in a clean condition. Provide proper facilities for lowering sections of pipe into trenches. Do not under any circumstances drop or dump pipe, fittings, valves, or any other water line material into trenches. Cut pipe in a neat workmanlike manner accurately to length established at the site and work into place without springing or forcing. Replace by one of the proper length any pipe or fitting that does not allow sufficient space for proper installation of jointing material. Blocking or wedging between bells and spigots will not be permitted. Lay bell-and-spigot pipe with the bell end

pointing in the direction of laying. Grade the pipeline in straight lines; avoid the formation of dips and low points. Support pipe at proper elevation and grade. Secure firm, uniform support. Wood support blocking will not be permitted. Lay pipe so that the full length of each section of pipe and each fitting will rest solidly on the pipe bedding; excavate recesses to accommodate bells, joints, and couplings. Provide anchors and supports where indicated and where necessary for fastening work into place. Make proper provision for expansion and contraction of pipelines. Keep trenches free of water until joints have been properly made. At the end of each work day, close open ends of pipe temporarily with wood blocks or bulkheads. Do not lay pipe when conditions of trench or weather prevent installation. Depth of cover over top of pipe shall not be less than 2 1/2 feet.

3.1.1.4 Installation of Tracer Wire

Install a continuous length of tracer wire for the full length of each run of nonmetallic pipe. Attach wire to top of pipe in such manner that it will not be displaced during construction operations.

3.1.1.5 Connections to Existing Water Lines

Make connections to existing water lines after approval is obtained and with a minimum interruption of service on the existing line. Make connections to existing lines under pressure in accordance with the recommended procedures of the manufacturer of the pipe being tapped.

3.1.1.6 Penetrations

Pipe passing through walls of valve pits and structures shall be provided with ductile-iron or Schedule 40 steel wall sleeves. Annular space between walls and sleeves shall be filled with rich cement mortar. Annular space between pipe and sleeves shall be filled with mastic.

3.1.1.7 Flanged Pipe

Flanged pipe shall only be installed above ground or with the flanges in valve pits.

3.1.2 Special Requirements for Installation of Water Mains

3.1.2.1 Installation of Ductile-Iron Piping

Unless otherwise specified, install pipe and fittings in accordance with paragraph entitled "General Requirements for Installation of Pipelines" and with the requirements of AWWA C600 for pipe installation, joint assembly, valve-and-fitting installation, and thrust restraint.

a. Jointing: Make push-on joints with the gaskets and lubricant specified for this type joint; assemble in accordance with the applicable requirements of AWWA C600 for joint assembly. Make mechanical joints with the gaskets, glands, bolts, and nuts specified for this type joint; assemble in accordance with the applicable requirements of AWWA C600 for joint assembly and the recommendations of Appendix A to AWWA C111/A21.11. Make flanged joints with the gaskets, bolts, and nuts specified for this type joint. Make flanged joints up tight; avoid undue strain on flanges, fittings, valves, and other equipment and accessories. Align bolt holes for each flanged joint. Use full size bolts for the bolt holes; use of undersized bolts to make up for

misalignment of bolt holes or for any other purpose will not be permitted. Do not allow adjoining flange faces to be out of parallel to such degree that the flanged joint cannot be made watertight without overstraining the flange. When flanged pipe or fitting has dimensions that do not allow the making of a proper flanged joint as specified, replace it by one of proper dimensions. Use setscrewed flanges to make flanged joints where conditions prevent the use of full-length flanged pipe and assemble in accordance with the recommendations of the setscrewed flange manufacturer. Assemble joints made with sleeve-type mechanical couplings in accordance with the recommendations of the coupling manufacturer. Make insulating joints with the gaskets, sleeves, washers, bolts, and nuts previously specified for this type joint. Assemble insulating joints as specified for flanged joints, except that bolts with insulating sleeves shall be full size for the bolt holes. Ensure that there is no metal-to-metal contact between dissimilar metals after the joint has been assembled.

b. Allowable Deflection: The maximum allowable deflection shall be as given in AWWA C600. If the alignment requires deflection in excess of the above limitations, special bends or a sufficient number of shorter lengths of pipe shall be furnished to provide angular deflections within the limit set forth.

c. Pipe Anchorage: Provide concrete thrust blocks (reaction backing) metal harness for pipe anchorage, except where metal harness is indicated. Thrust blocks shall be in accordance with the requirements of AWWA C600 for thrust restraint, except that size and positioning of thrust blocks shall be as indicated. Use concrete, ASTM C94/C94M, having a minimum compressive strength of 2,500 psi at 28 days; or use concrete of a mix not leaner than one part cement, 2 1/2 parts sand, and 5 parts gravel, having the same minimum compressive strength. Metal harness shall be in accordance with the requirements of AWWA C600 for thrust restraint, using tie rods and clamps as shown in NFPA 24, except as otherwise indicated.

3.1.2.2 Installation of PVC Plastic Water Main Pipe

Installation of PVC Plastic Water Main Pipe and Associated Fittings: Unless otherwise specified, install pipe and fittings in accordance with paragraph entitled "General Requirements for Installation of Pipelines"; with the requirements of AWWA C605 for laying of pipe, joining PVC pipe to fittings and accessories, and setting of hydrants, valves, and fittings; and with the recommendations for pipe joint assembly and appurtenance installation in AWWA M23, Chapter 7, "Installation."

a. Jointing: Make push-on joints with the elastomeric gaskets specified for this type joint, using either elastomeric-gasket bell-end pipe or elastomeric-gasket couplings. For pipe-to-pipe push-on joint connections, use only pipe with push-on joint ends having factory-made bevel; for push-on joint connections to metal fittings, valves, and other accessories, cut spigot end of pipe off square and re-bevel pipe end to a bevel approximately the same as that on ductile-iron pipe used for the same type of joint. Use an approved lubricant recommended by the pipe manufacturer for push-on joints. Assemble push-on joints for pipe-to-pipe joint connections in accordance with the requirements of AWWA C605 for laying the pipe and the recommendations in AWWA M23, Chapter 7, "Installation," for pipe joint assembly. Assemble push-on joints for connection to fittings, valves, and other accessories in accordance with the requirements of AWWA C605 for joining PVC pipe to

fittings and accessories and with the applicable requirements of AWWA C600 for joint assembly. Make compression-type joints/mechanical joints with the gaskets, glands, bolts, nuts, and internal stiffeners previously specified for this type joint; assemble in accordance with the requirements of AWWA C605 for joining PVC pipe to fittings and accessories, with the applicable requirements of AWWA C600 for joint assembly, and with the recommendations of Appendix A to AWWA C111/A21.11. Cut off spigot end of pipe for compression-type joint/mechanical-joint connections and do not re-bevel. Assemble joints made with sleeve-type mechanical couplings in accordance with the recommendations of the coupling manufacturer using internal stiffeners as previously specified for compression-type joints.

b. Offset: Maximum offset in alignment between adjacent pipe joints shall be as recommended by the manufacturer and approved by the Contracting Officer, but shall not exceed 5 degrees.

c. Pipe Anchorage: Provide concrete thrust blocks (reaction backing) metal harness for pipe anchorage, except where metal harness is indicated. Thrust blocks shall be in accordance with the requirements of AWWA C605 for reaction or thrust blocking and plugging of dead ends, except that size and positioning of thrust blocks shall be as indicated. Use concrete, ASTM C94/C94M, having a minimum compressive strength of 2,500 psi at 28 days; or use concrete of a mix not leaner than one part cement, 2 1/2 parts sand, and 5 parts gravel, having the same minimum compressive strength.

d. Fittings: Install in accordance with AWWA C605.

3.1.2.3 Installation of Valves and Hydrants

a. Installation of Valves: Install gate valves, AWWA C500 and UL 262, in accordance with the requirements of AWWA C600 for valve-and-fitting installation and with the recommendations of the Appendix ("Installation, Operation, and Maintenance of Gate Valves") to AWWA C500. Install gate valves, AWWA C509 or AWWA C515, in accordance with the requirements of AWWA C600 for valve-and-fitting installation and with the recommendations of the Appendix ("Installation, Operation, and Maintenance of Gate Valves") to AWWA C509 or AWWA C515. Install gate valves on PVC water mains in accordance with the recommendations for appurtenance installation in AWWA M23, Chapter 7, "Installation." Make and assemble joints to gate valves as specified for making and assembling the same type joints between pipe and fittings.

b. Installation of Hydrants: Install hydrants in accordance with AWWA C600 for hydrant installation and as indicated. Make and assemble joints as specified for making and assembling the same type joints between pipe and fittings. Install hydrants with the 4 1/2 inch connections facing the adjacent paved surface. If there are two paved adjacent surfaces, contact the Contracting Officer for further instructions.

3.1.3 Installation of Water Service Piping

3.1.3.1 Location

Connect water service piping to the building service where the building service has been installed. Where building service has not been installed, terminate water service lines approximately 5 feet from the building line at a point directed by the Contracting Officer; such water service lines

shall be closed with plugs or caps.

3.1.3.2 Service Line Connections to Water Mains

Connect service lines to the main by a corporation stop and gooseneck and install a service stop below the frostline. Connect service lines to ductile-iron water mains in accordance with AWWA C600 for service taps. Connect service lines to PVC plastic water mains in accordance with UBPPA UNI-PUB-08 and the recommendations of AWWA M23, Chapter 9, "Service Connections."

3.1.4 Special Requirements for Installation of Water Service Piping

3.1.4.1 Installation of Plastic Piping

Install pipe and fittings in accordance with paragraph entitled "General Requirements for Installation of Pipelines" and with the applicable requirements of ASTM D2774 and ASTM D2855, unless otherwise specified. Handle solvent cements used to join plastic piping in accordance with ASTM F402.

a. Jointing: Make solvent-cemented joints for PVC plastic piping using the solvent cement previously specified for this material; assemble joints in accordance with ASTM D2855. Make plastic pipe joints to other pipe materials in accordance with the recommendations of the plastic pipe manufacturer.

b. Plastic Pipe Connections to Appurtenances: Connect plastic pipe service lines to corporation stops and gate valves in accordance with the recommendations of the plastic pipe manufacturer.

3.1.4.2 Service Lines for Sprinkler Supplies

Water service lines used to supply building sprinkler systems for fire protection shall be connected to the water distribution main in accordance with NFPA 24.

3.1.5 Disinfection

Prior to disinfection, obtain Contracting Officer approval of the proposed method for disposal of waste water from disinfection procedures. Disinfect new water piping and existing water piping affected by Contractor's operations in accordance with AWWA C651. Fill piping systems with solution containing minimum of 50 parts per million of available chlorine and allow solution to stand for minimum of 24 hours. Flush solution from the systems with domestic water until maximum residual chlorine content is within the range of 0.2 and 0.5 parts per million, or the residual chlorine content of domestic water supply. Obtain at least two consecutive satisfactory bacteriological samples from new water piping, analyze by a certified laboratory, and submit the results prior to the new water piping being placed into service. Disinfection of systems supplying nonpotable water is not required.

3.2 FIELD QUALITY CONTROL

3.2.1 Field Tests and Inspections

Prior to hydrostatic testing, obtain Contracting Officer approval of the proposed method for disposal of waste water from hydrostatic testing. The

Contracting Officer will conduct field inspections and witness field tests specified in this section. The Contractor shall perform field tests, and provide labor, equipment, and incidentals required for testing, except that water and electric power needed for field tests will be furnished as set forth in Section 01 50 00 TEMPORARY CONSTRUCTION FACILITIES AND CONTROLS. The Contractor shall produce evidence, when required, that any item of work has been constructed in accordance with the drawings and specifications. Do not begin testing on any section of a pipeline where concrete thrust blocks have been provided until at least 5 days after placing of the concrete.

3.2.2 Testing Procedure

3.2.2.1 Hydrostatic Testing

Test water mains and water service lines in accordance with the applicable specified standard. Where water mains and water service lines provide fire service, test in accordance with the special testing requirements given in paragraph entitled "Special Testing Requirements for Fire Service." Test ductile-iron water mains and water service lines in accordance with the requirements of AWWA C600 for hydrostatic testing. The amount of leakage on ductile-iron pipelines with mechanical-joints shall not exceed the amounts given in AWWA C600; no leakage will be allowed at joints made by any other method. Test PVC plastic water mains in accordance with the requirements of AWWA C605 for pressure and leakage tests. The amount of leakage on pipelines made of PVC plastic water main pipe shall not exceed the amounts given in AWWA C605, except that at joints made with sleeve-type mechanical couplings, no leakage will be allowed. Test water service lines in accordance with applicable requirements of AWWA C600 for hydrostatic testing. No leakage will be allowed at copper pipe joints copper tubing joints (soldered, compression type, brazed) plastic pipe joints flanged joints and screwed joints.

3.2.2.2 Leakage Testing

For leakage test, use a hydrostatic pressure not less than the maximum working pressure of the system. Leakage test may be performed at the same time and at the same test pressure as the pressure test.

3.2.3 Special Testing Requirements for Fire Service

Test water mains and water service lines providing fire service or water and fire service in accordance with NFPA 24. The additional water added to the system must not exceed the limits given in NFPA 24

3.3 CLEANUP

Upon completion of the installation of water lines, and appurtenances, all debris and surplus materials resulting from the work shall be removed.

-- End of Section --

THIS PAGE HAS BEEN INTENTIONALLY LEFT BLANK

SECTION 33 30 00

SANITARY SEWERS
04/08

PART 1 GENERAL

1.1 REFERENCES

The publications listed below form a part of this specification to the extent referenced. The publications are referred to within the text by the basic designation only.

AMERICAN WATER WORKS ASSOCIATION (AWWA)

AWWA C104/A21.4	(2013) Cement-Mortar Lining for Ductile-Iron Pipe and Fittings for Water
AWWA C110/A21.10	(2012) Ductile-Iron and Gray-Iron Fittings for Water
AWWA C111/A21.11	(2012) Rubber-Gasket Joints for Ductile-Iron Pressure Pipe and Fittings
AWWA C115/A21.15	(2011) Flanged Ductile-Iron Pipe With Ductile-Iron or Gray-Iron Threaded Flanges
AWWA C151/A21.51	(2009) Ductile-Iron Pipe, Centrifugally Cast, for Water
AWWA C153/A21.53	(2011) Ductile-Iron Compact Fittings for Water Service
AWWA C600	(2010) Installation of Ductile-Iron Water Mains and Their Appurtenances
AWWA C605	(2013) Underground Installation of Polyvinyl Chloride (PVC) Pressure Pipe and Fittings for Water
AWWA C900	(2007; Errata 2008) Polyvinyl Chloride (PVC) Pressure Pipe, and Fabricated Fittings, 4 In. Through 12 In. (100 mm Through 300 mm), for Water Distribution
AWWA M23	(2002; 2nd Ed) Manual: PVC Pipe - Design and Installation

ASME INTERNATIONAL (ASME)

ASME B1.20.1	(2013) Pipe Threads, General Purpose (Inch)
ASME B16.1	(2010) Gray Iron Pipe Flanges and Flanged Fittings Classes 25, 125, and 250
ASME B18.2.2	(2010) Nuts for General Applications: Machine Screw Nuts, Hex, Square, Hex

	Flange, and Coupling Nuts (Inch Series)
ASME B18.5.2.1M	(2006; R 2011) Metric Round Head Short Square Neck Bolts
ASME B18.5.2.2M	(1982; R 2010) Metric Round Head Square Neck Bolts

ASTM INTERNATIONAL (ASTM)

ASTM A123/A123M	(2013) Standard Specification for Zinc (Hot-Dip Galvanized) Coatings on Iron and Steel Products
ASTM A307	(2012) Standard Specification for Carbon Steel Bolts and Studs, 60 000 PSI Tensile Strength
ASTM A47/A47M	(1999; R 2014) Standard Specification for Ferritic Malleable Iron Castings
ASTM A48/A48M	(2003; R 2012) Standard Specification for Gray Iron Castings
ASTM A536	(1984; R 2009) Standard Specification for Ductile Iron Castings
ASTM A563	(2007a; R2014) Standard Specification for Carbon and Alloy Steel Nuts
ASTM A746	(2009) Standard Specification for Ductile Iron Gravity Sewer Pipe
ASTM C150/C150M	(2012) Standard Specification for Portland Cement
ASTM C270	(2012a) Standard Specification for Mortar for Unit Masonry
ASTM C33/C33M	(2013) Standard Specification for Concrete Aggregates
ASTM C443	(2011) Standard Specification for Joints for Concrete Pipe and Manholes, Using Rubber Gaskets
ASTM C478	(2013) Standard Specification for Precast Reinforced Concrete Manhole Sections
ASTM C828	(2011) Low-Pressure Air Test of Vitrified Clay Pipe Lines
ASTM C923	(2008; R 2013) Standard Specification for Resilient Connectors Between Reinforced Concrete Manhole Structures, Pipes and Laterals
ASTM C924	(2002; R 2009) Testing Concrete Pipe Sewer Lines by Low-Pressure Air Test Method

ASTM C94/C94M	(2014b) Standard Specification for Ready-Mixed Concrete
ASTM C969	(2002; R 2009) Standard Practice for Infiltration and Exfiltration Acceptance Testing of Installed Precast Concrete Pipe Sewer Lines
ASTM C972	(2000; R 2011) Compression-Recovery of Tape Sealant
ASTM C990	(2009) Standard Specification for Joints for Concrete Pipe, Manholes and Precast Box Sections Using Preformed Flexible Joint Sealants
ASTM D1784	(2011) Standard Specification for Rigid Poly(Vinyl Chloride) (PVC) Compounds and Chlorinated Poly(Vinyl Chloride) (CPVC) Compounds
ASTM D1785	(2012) Standard Specification for Poly(Vinyl Chloride) (PVC), Plastic Pipe, Schedules 40, 80, and 120
ASTM D2241	(2009) Standard Specification for Poly(Vinyl Chloride) (PVC) Pressure-Rated Pipe (SDR Series)
ASTM D2321	(2011) Standard Practice for Underground Installation of Thermoplastic Pipe for Sewers and Other Gravity-Flow Applications
ASTM D2412	(2011) Determination of External Loading Characteristics of Plastic Pipe by Parallel-Plate Loading
ASTM D2464	(2013) Standard Specification for Threaded Poly(Vinyl Chloride) (PVC) Plastic Pipe Fittings, Schedule 80
ASTM D2466	(2013) Standard Specification for Poly(Vinyl Chloride) (PVC) Plastic Pipe Fittings, Schedule 40
ASTM D2467	(2013a) Standard Specification for Poly(Vinyl Chloride) (PVC) Plastic Pipe Fittings, Schedule 80
ASTM D2680	(2001; R 2009) Standard Specification for Acrylonitrile-Butadiene-Styrene (ABS) and Poly(Vinyl Chloride) (PVC) Composite Sewer Piping
ASTM D2751	(2005) Standard Specification for Acrylonitrile-Butadiene-Styrene (ABS) Sewer Pipe and Fittings

ASTM D3034	(2008) Standard Specification for Type PSM Poly(Vinyl Chloride) (PVC) Sewer Pipe and Fittings
ASTM D3139	(1998; R 2011) Joints for Plastic Pressure Pipes Using Flexible Elastomeric Seals
ASTM D3212	(2007; R 2013) Standard Specification for Joints for Drain and Sewer Plastic Pipes Using Flexible Elastomeric Seals
ASTM D3753	(2012; E 2013) Glass-Fiber-Reinforced Polyester Manholes and Wetwells
ASTM D4101	(2011) Standard Specification for Polypropylene Injection and Extrusion Materials
ASTM D412	(2006a; R 2013) Standard Test Methods for Vulcanized Rubber and Thermoplastic Elastomers - Tension
ASTM D624	(2000; R 2012) Tear Strength of Conventional Vulcanized Rubber and Thermoplastic Elastomers
ASTM F1417	(2011a) Standard Test Method for Installation Acceptance of Plastic Gravity Sewer Lines Using Low Pressure Air
ASTM F477	(2010) Standard Specification for Elastomeric Seals (Gaskets) for Joining Plastic Pipe
ASTM F949	(2010) Poly(Vinyl Chloride) (PVC) Corrugated Sewer Pipe with a Smooth Interior and Fittings

U.S. GENERAL SERVICES ADMINISTRATION (GSA)

CID A-A-60005	(Basic; Notice 2) Frames, Covers, Gratings, Steps, Sump And Catch Basin, Manhole

U.S. NATIONAL ARCHIVES AND RECORDS ADMINISTRATION (NARA)

29 CFR 1910.27	Fixed Ladders

UNI-BELL PVC PIPE ASSOCIATION (UBPPA)

UBPPA UNI-B-6	(1998) Recommended Practice for Low-Pressure Air Testing of Installed Sewer Pipe

1.2 SYSTEM DESCRIPTION

1.2.1 Sanitary Sewer Gravity Pipeline

Provide mains and laterals of ductile-iron pipe or polyvinyl chloride (PVC)

plastic pipe. Provide building connections of polyvinyl chloride (PVC) plastic pipe. Provide new and modify existing exterior sanitary gravity sewer piping and appurtenances. Provide each system complete and ready for operation. The exterior sanitary gravity sewer system includes equipment, materials, installation, and workmanship as specified herein more than 5 feet outside of building walls.

1.2.2 Sanitary Sewer Pressure Lines

Provide pressure lines of ductile iron pressure pipe or polyvinyl chloride (PVC) plastic pressure pipe.

1.3 SUBMITTALS

Government approval is required for submittals with a "G" designation; submittals not having a "G" designation are for Contractor Quality Control approval. Submit the following in accordance with Section 01 33 00 SUBMITTAL PROCEDURES:

SD-01 Preconstruction Submittals

Existing Conditions

SD-02 Shop Drawings

Drawings
Precast concrete manhole
Metal items
Frames, covers, and gratings

SD-03 Product Data

Pipeline materials

SD-06 Test Reports

Reports

SD-07 Certificates

Portland Cement

1.4 QUALITY ASSURANCE

1.4.1 Installer Qualifications

Install specified materials by a licensed underground utility Contractor licensed for such work in the state where the work is to be performed. Installing Contractor's License shall be current and be state certified or state registered.

1.4.2 Drawings

a. Submit Installation Drawings showing complete detail, both plan and side view details with proper layout and elevations.

b. Submit As-Built Drawings for the complete sanitary sewer system showing complete detail with all dimensions, both above and below grade, including invert elevation.

c. Sign and seal As-Built Drawings by a Professional Surveyor and Mapper. Include the following statement: "All potable water lines crossed by sanitary hazard mains are in accordance with the permitted utility separation requirements."

1.5 DELIVERY, STORAGE, AND HANDLING

1.5.1 Delivery and Storage

1.5.1.1 Piping

Inspect materials delivered to site for damage; store with minimum of handling. Store materials on site in enclosures or under protective coverings. Store plastic piping and jointing materials and rubber gaskets under cover out of direct sunlight. Do not store materials directly on the ground. Keep inside of pipes and fittings free of dirt and debris.

1.5.1.2 Metal Items

Check upon arrival; identify and segregate as to types, functions, and sizes. Store off the ground in a manner affording easy accessibility and not causing excessive rusting or coating with grease or other objectionable materials.

1.5.1.3 Cement, Aggregate, and Reinforcement

As specified in Section 03 30 00 CAST-IN-PLACE CONCRETE.

1.5.2 Handling

Handle pipe, fittings, and other accessories in such manner as to ensure delivery to the trench in sound undamaged condition. Take special care not to damage linings of pipe and fittings; if lining is damaged, make satisfactory repairs. Carry, do not drag, pipe to trench.

1.6 PROJECT/SITE CONDITIONS

Submit drawings of existing conditions, after a thorough inspection of the area in the presence of the Contracting Officer. Details shall include the environmental conditions of the site and adjacent areas. Submit copies of the records for verification before starting work.

PART 2 PRODUCTS

2.1 PIPELINE MATERIALS

Pipe shall conform to the respective specifications and other requirements specified below. Submit manufacturer's standard drawings or catalog cuts.

2.1.1 Ductile Iron Gravity Sewer Pipe and Associated Fittings

2.1.1.1 Ductile Iron Gravity Pipe and Fittings

Ductile iron pipe shall conform to ASTM A746, Thickness Class 52. Fittings shall conform to AWWA C110/A21.10 or AWWA C153/A21.53. Fittings with push-on joint ends shall conform to the same requirements as fittings with mechanical-joint ends, except that the bell design shall be modified, as approved by the Contracting Officer, for push-on joint. Fittings shall have

strength at least equivalent to that of the pipe. Ends of pipe and fittings shall be suitable for the joints specified hereinafter. Pipe and fittings shall have cement-mortar lining conforming to AWWA C104/A21.4, standard thickness.

2.1.1.2 Ductile Iron Gravity Joints and Jointing Materials

Pipe and fittings shall have push-on joints or mechanical joints, except as otherwise specified in this paragraph. Push-on joint pipe ends and fitting ends, gaskets, and lubricant for joint assembly shall conform to AWWA C111/A21.11. Mechanical joint requirements for pipe ends, glands, bolts and nuts, and gaskets shall conform to AWWA C111/A21.11.

2.1.2 Ductile Iron Pressure Piping

2.1.2.1 Ductile Iron Pressure Pipe and Fittings

Ductile-iron pipe shall conform to AWWA C151/A21.51, Thickness Class 52. Flanged pipe shall conform to AWWA C115/A21.15. Fittings shall conform to AWWA C110/A21.10 or AWWA C153/A21.53. Fittings with push-on joint ends shall conform to the same requirements as fittings with mechanical-joint ends, except that the bell design shall be modified, as approved, for push-on joint. Fittings shall have pressure rating at least equivalent to that of the pipe. Ends of pipe and fittings shall be suitable for the joints specified hereinafter. Pipe and fittings shall have cement-mortar lining conforming to AWWA C104/A21.4, standard thickness.

2.1.2.2 Ductile Iron Pressure Joints and Jointing Materials

a. Joints, general: Joints for pipe and fittings shall be push-on joints or mechanical joints except as otherwise specified in this paragraph. Joints shall be flanged joints where indicated. Joints made with sleeve-type mechanical coupling may be used in lieu of push-on joint.

b. Push-on joints: Shape of pipe ends and fitting ends, gaskets, and lubricant for joint assembly shall conform to AWWA C111/A21.11.

c. Mechanical joints: Dimensional and material requirements for pipe ends, glands, bolts and nuts, and gaskets shall conform to AWWA C111/A21.11.

d. Flanged joints: Bolts, nuts, and gaskets for flanged connections shall be as recommended in the Appendix to AWWA C115/A21.15. Flange for setscrewed flanges shall be of ductile iron, ASTM A536, Grade 65-45-12, and shall conform to the applicable requirements of ASME B16.1, Class 250. Setscrews for setscrewed flanges shall be 190,000 psi tensile strength, heat treated, and zinc-coated steel. Gasket for setscrewed flanges shall conform to the applicable requirements for mechanical-joint gaskets specified in AWWA C111/A21.11. Design of setscrewed gasket shall provide for confinement and compression of gasket when joint to adjoining flange is made.

e. Joints made with sleeve-type mechanical couplings: Couplings shall be designed to couple plain-end piping by compression of a ring gasket at each end of the adjoining pipe sections. The coupling shall consist of one middle ring flared or beveled at each end to provide a gasket seat, two follower rings, two resilient tapered rubber gaskets, and bolts and nuts to draw the follower rings toward each other to compress the gaskets. The middle ring and the follower rings shall be true circular

sections free from irregularities, flat spots, and surface defects; the design shall provide for confinement and compression of the gaskets. Middle ring shall be of cast-iron, and the follower rings shall be of malleable iron or ductile iron. Cast iron shall conform to ASTM A48/A48M and shall be not less than Class 25. Malleable iron shall conform to ASTM A47/A47M. Ductile iron shall conform to ASTM A536. Gaskets shall be designed for long life and resistance to set after installation and shall meet the applicable requirements specified for gaskets for mechanical joint in AWWA C111/A21.11. Bolts shall be track-head type; bolts and nuts shall be either of the following: bolts conforming to the tensile requirements of ASTM A307, Grade A, with nuts conforming to the tensile requirements of ASTM A563, Grade A; or round-head square-neck type bolts conforming to ASME B18.5.2.1M and ASME B18.5.2.2M with hex nuts conforming to ASME B18.2.2. Bolts shall be 5/8 inch in diameter; minimum number of bolts for each coupling shall be 3 for 3 inch pipe, 4 for 4 inch pipe, and 5 for 5 inch pipe. Bolt holes in follower rings shall be of a shape to hold fast the necks of the bolts used. Sleeve-type mechanical couplings shall not be used as an optional method of jointing except where pipeline is adequately anchored to resist tension pull across the joint.

2.1.3 PVC Plastic Gravity Sewer Piping

2.1.3.1 PVC Plastic Gravity Pipe and Fittings

ASTM D3034, SDR 35, or ASTM F949 with ends suitable for elastomeric gasket joints.

2.1.3.2 PVC Plastic Gravity Joints and Jointing Material

Joints shall conform to ASTM D3212. Gaskets shall conform to ASTM F477.

2.1.4 PVC Plastic Pressure Pipe and Associated Fittings

2.1.4.1 PVC Plastic Pressure Pipe and Fittings

a. Pipe and Fittings Less Than 4 inch Diameter: Pipe, couplings and fittings shall be manufactured of materials conforming to ASTM D1784, Class 12454B.

(1) Screw-Joint: Pipe shall conform to dimensional requirements of ASTM D1785, Schedule 80, with joints meeting requirements of 150 psi working pressure, 200 psi hydrostatic test pressure, unless otherwise shown or specified. Fittings for threaded pipe shall conform to requirements of ASTM D2464, threaded to conform to the requirements of ASME B1.20.1 for use with Schedule 80 pipe and fittings. Pipe couplings when used, shall be tested as required by ASTM D2464.

(2) Push-On Joint: ASTM D3139, with ASTM F477 gaskets. Fittings for push-on joints shall be iron conforming to AWWA C110/A21.10 or AWWA C111/A21.11. Iron fittings and specials shall shall be cement-mortar lined (standard thickness) in accordance with AWWA C104/A21.4.

(3) Solvent Cement Joint: Pipe shall conform to dimensional requirements of ASTM D1785 or ASTM D2241 with joints meeting the requirements of 150 psi working pressure and 200 psi hydrostatic test pressure. Fittings for solvent cement jointing shall conform

to ASTM D2466 or ASTM D2467.

b. Pipe and Fittings 4 inch Diameter to 12 inch: Pipe shall conform to AWWA C900 and shall be plain end or gasket bell end, Pressure Class 150 (DR 18), with cast-iron-pipe-equivalent OD. Fittings shall be gray-iron or ductile-iron conforming to AWWA C110/A21.10 or AWWA C153/A21.53 and shall have cement-mortar lining conforming to AWWA C104/A21.4, standard thickness. Fittings with push-on joint ends shall conform to the same requirements as fittings with mechanical-joint ends, except that bell design shall be modified, as approved, for push-on joint suitable for use with the PVC plastic pressure pipe specified in this paragraph.

2.1.4.2 PVC Plastic Pressure Joints and Jointing Material

Joints for pipe, 4 inch to 12 inch diameter, shall be push-on joints as specified in ASTM D3139. Joints between pipe and fittings shall be push-on joints as specified in ASTM D3139 or shall be compression-type joints/mechanical-joints as respectively specified in ASTM D3139 and AWWA C111/A21.11. Each joint connection shall be provided with an elastomeric gasket suitable for the bell or coupling with which it is to be used. Gaskets for push-on joints for pipe shall conform to ASTM F477. Gaskets for push-on joints and compression-type joints/mechanical-joints for joint connections between pipe and fittings shall be as specified in AWWA C111/A21.11, respectively, for push-on joints and mechanical-joints.

2.2 CONCRETE MATERIALS

2.2.1 Cement Mortar

Cement mortar shall conform to ASTM C270, Type M with Type II cement.

2.2.2 Portland Cement

Submit certificates of compliance stating the type of cement used in manufacture of concrete pipe, fittings and precast manholes. Portland cement shall conform to ASTM C150/C150M, Type II for concrete used in concrete pipe, concrete pipe fittings, and manholes and type optional with the Contractor for cement used in concrete cradle, concrete encasement, and thrust blocking. Where aggregates are alkali reactive, as determined by Appendix XI of ASTM C33/C33M, a cement containing less than 0.60 percent alkalies shall be used.

2.2.3 Portland Cement Concrete

Portland cement concrete shall conform to ASTM C94/C94M, compressive strength of 4000 psi at 28 days, except for concrete cradle and encasement or concrete blocks for manholes. Concrete used for cradle and encasement shall have a compressive strength of 2500 psi minimum at 28 days. Concrete in place shall be protected from freezing and moisture loss for 7 days.

2.3 MISCELLANEOUS MATERIALS

2.3.1 Precast Concrete Manholes & Glass-Fiber-Reinforced Polyester Manholes

Precast concrete manhole risers, base sections, and tops shall conform to ASTM C478; base and first riser shall be monolithic.
Glass-Fiber-Reinforced Polyester Manholes shall conform to ASTM D3753.

2.3.2 Gaskets and Connectors

Gaskets for joints between manhole sections shall conform to ASTM C443. Resilient connectors for making joints between manhole and pipes entering manhole shall conform to ASTM C923 or ASTM C990.

2.3.3 External Preformed Rubber Joint Seals

An external preformed rubber joint seal shall be an accepted method of sealing cast iron covers to precast concrete sections to prevent ground water infiltration into sewer systems. All finished and sealed manholes constructed in accordance with paragraph entitled "Manhole Construction" shall be tested for leakage in the same manner as pipelines as described in paragraph entitled "Leakage Tests." The seal shall be multi-section with a neoprene rubber top section and all lower sections made of Ethylene Propylene Diene Monomer (EPDM) rubber with a minimum thickness of 60 mils. Each unit shall consist of a top and bottom section and shall have mastic on the bottom of the bottom section and mastic on the top and bottom of the top section. The mastic shall be a non-hardening butyl rubber sealant and shall seal to the cone/top slab of the manhole/catch basin and over the lip of the casting. Extension sections shall cover up to two more adjusting rings. Properties and values are listed in the following tables:

Properties, Test Methods and Minimum Values for Rubber used in Preformed Joint Seals

Physical Properties	Test Methods	EPDM	Neoprene	Butyl mastic
Tensile, psi	ASTM D412	1840	2195	-
Elongation percent	ASTM D412	553	295	350
Tear Resistance, ppi	ASTM D624 (Die B)	280	160	-
Rebound, percent, 5 minutes	ASTM C972 (mod.)	-	-	11
Rebound, percent, 2 hours	ASTM C972	-	-	12

2.3.4 Metal Items

2.3.4.1 Frames, Covers, and Gratings for Manholes

CID A-A-60005, cast iron; figure numbers shall be as follows :

a. Traffic manhole: Provide in paved areas.

Frame: Figure 1, Size 22A
Cover: Figure 8, Size 22A
Steps: Figure 19

b. Non-traffic manhole:

Frame: Figure 4, Size 22
Cover: Figure 12, Size 22
Steps: Figure 19

Frames and covers shall be cast iron, ductile iron or reinforced concrete. Cast iron frames and covers shall be as indicated or shall be of type suitable for the application, circular, without vent holes. The frames and covers shall have a combined weight of not less than 400 pounds. Reinforced concrete frames and covers shall be as indicated or shall conform to ASTM C478. The word "Sanitary Sewer" shall be stamped or cast into covers so that it is plainly visible.

2.3.4.2 Manhole Steps

Zinc-coated steel conforming to 29 CFR 1910.27. As an option, plastic or rubber coating pressure-molded to the steel may be used. Plastic coating shall conform to ASTM D4101, copolymer polypropylene. Rubber shall conform to ASTM C443, except shore A durometer hardness shall be 70 plus or minus 5. Aluminum steps or rungs will not be permitted. Steps are not required in manholes less than 4 feet deep.

2.3.4.3 Manhole Ladders

A steel ladder shall be provided where the depth of a manhole exceeds 12 feet. The ladder shall not be less than 16 inches in width, with 3/4 inch diameter rungs spaced 12 inches apart. The two stringers shall be a minimum 3/8 inch thick and 2 inches wide. Ladders and inserts shall be galvanized after fabrication in conformance with ASTM A123/A123M.

2.4 REPORTS

Submit Test Reports. Compaction and density test shall be in accordance with Section 31 23 00.00 20 EXCAVATION AND FILL. Submit Inspection Reports for daily activities during the installation of the sanitary system. Information in the report shall be detailed enough to describe location of work and amount of pipe laid in place, measured in linear feet.

PART 3 EXECUTION

3.1 INSTALLATION OF PIPELINES AND APPURTENANT CONSTRUCTION

3.1.1 General Requirements for Installation of Pipelines

These general requirements apply except where specific exception is made in the following paragraphs entitled "Special Requirements."

3.1.1.1 Location

The work covered by this section shall terminate at a point approximately 5 feet from the building, unless otherwise indicated. Where the location of the sewer is not clearly defined by dimensions on the drawings, do not lay sewer line closer horizontally than 10 feet to a water main or service line. Install pressure sewer lines beneath water lines only, with the top of the sewer line being at least 2 feet below bottom of water line. Where sanitary sewer lines pass above water lines, encase sewer in concrete for a distance of 10 feet on each side of the crossing, or substitute rubber-gasketed pressure pipe for the pipe being used for the same distance. Where sanitary sewer lines pass below water lines, lay pipe so that no joint in the sewer line will be closer than 3 feet, horizontal distance, to the water line.

a. Sanitary piping installation parallel with water line:

(1) Normal conditions: Sanitary piping or manholes shall be laid at least 10 feet horizontally from a water line whenever possible. The distance shall be measured edge-to-edge.

(2) Unusual conditions: When local conditions prevent a horizontal separation of 10 feet, the sanitary piping or manhole may be laid closer to a water line provided that:

(a) The top (crown) of the sanitary piping shall be at least 18 inches below the bottom (invert) of the water main.

(b) Where this vertical separation cannot be obtained, the sanitary piping shall be constructed of AWWA-approved ductile iron water pipe pressure tested in place without leakage prior to backfilling.

(c) The sewer manhole shall be of watertight construction and tested in place.

b. Installation of sanitary piping crossing a water line:

(1) Normal conditions: Lay sanitary sewer piping by crossing under water lines to provide a separation of at least 18 inches between the top of the sanitary piping and the bottom of the water line whenever possible.

(2) Unusual conditions: When local conditions prevent a vertical separation described above, use the following construction:

(a) Sanitary piping passing over or under water lines shall be constructed of AWWA-approved ductile iron water pipe, pressure tested in place without leakage prior to backfilling.

(b) Sanitary piping passing over water lines shall, in addition, be protected by providing:

(1) A vertical separation of at least 18 inches between the bottom of the sanitary piping and the top of the water line.

(2) Adequate structural support for the sanitary piping to prevent excessive deflection of the joints and the settling on and breaking of the water line.

(3) That the length, minimum 20 feet, of the sanitary piping be centered at the point of the crossing so that joints shall be equidistant and as far as possible from the water line.

c. Sanitary sewer manholes: No water piping shall pass through or come in contact with any part of a sanitary sewer manhole.

3.1.1.2 Earthwork

Perform earthwork operations in accordance with Section 31 23 00.00 20 EXCAVATION AND FILL.

3.1.1.3 Pipe Laying and Jointing

Inspect each pipe and fitting before and after installation; replace those found defective and remove from site. Provide proper facilities for

lowering sections of pipe into trenches. Lay nonpressure pipe with the bell ends in the upgrade direction. Adjust spigots in bells to give a uniform space all around. Blocking or wedging between bells and spigots will not be permitted. Replace by one of the proper dimensions, pipe or fittings that do not allow sufficient space for installation of joint material. At the end of each work day, close open ends of pipe temporarily with wood blocks or bulkheads. Provide batterboards not more than 25 feet apart in trenches for checking and ensuring that pipe invert elevations are as indicated. Laser beam method may be used in lieu of batterboards for the same purpose. Branch connections shall be made by use of regular fittings or solvent cemented saddles as approved. Saddles for ABS and PVC composite pipe shall conform to Figure 2 of ASTM D2680; saddles for ABS pipe shall comply with Table 3 of ASTM D2751; and saddles for PVC pipe shall conform to Table 4 of ASTM D3034.

3.1.1.4 Connections to Existing Lines

Obtain approval from the Contracting Officer before making connection to existing line. Conduct work so that there is minimum interruption of service on existing line.

3.1.2 Special Requirements

3.1.2.1 Installation of Ductile Iron Gravity Sewer Pipe

Unless otherwise specified, install pipe and associated fittings in accordance with paragraph entitled "General Requirements for Installation of Pipelines" of this section and with the requirements of AWWA C600 for pipe installation and joint assembly.

a. Make push-on joints with the gaskets and lubricant specified for this type joint and assemble in accordance with the applicable requirements of AWWA C600 for joint assembly. Make mechanical-joints with the gaskets, glands, bolts, and nuts specified for this type joint and assemble in accordance with the applicable requirements of AWWA C600 for joint assembly and the recommendations of Appendix A to AWWA C111/A21.11.

3.1.2.2 Installation of Ductile-Iron Pressure Lines

Unless otherwise specified, install pipe and fittings in accordance with paragraph entitled "General Requirements for Installation of Pipelines" of this section and with the requirements of AWWA C600 for pipe installation, joint assembly, and valve-and-fitting installation.

a. Make push-on joints with the gaskets and lubricant specified for this type joint and assemble in accordance with the applicable requirements of AWWA C600 for joint assembly. Make mechanical-joints with the gaskets, glands, bolts, and nuts specified for this type joint; assemble in accordance with the applicable requirements of AWWA C600 for joint assembly and the recommendations of Appendix A to AWWA C111/A21.11. Make flanged joints with gaskets, bolts, and nuts specified for this type joint. Make flanged joints up tight, taking care to avoid undue strain on flanges, fittings, and other accessories. Align bolt holes for each flanged joint. Use full size bolts for the bolt holes; use of undersized bolts to make up for misalignment of bolt holes or for any other purpose will not be permitted. Do not allow adjoining flange faces to be out of parallel to such degree that the flanged joint cannot be made watertight without

overstraining the flange. When flanged pipe or fittings have dimensions that do not allow the making of a proper flanged joint as specified, replace it by one of proper dimensions. Assemble joints made with sleeve-type mechanical couplings in accordance with the recommendations of the coupling manufacturer, as approved.

c. Pipe anchorage: Provide concrete thrust blocks (reaction backing) for pipe anchorage. Size and position thrust blocks as indicated. Use concrete conforming to ASTM C94/C94M having a minimum compressive strength of 2,000 psi at 28 days; or use concrete of a mix not leaner than one part cement, 2 1/2 parts sand, and 5 parts gravel, having the same minimum compressive strength.

3.1.2.3 Installation of PVC Plastic Piping

Install pipe and fittings in accordance with paragraph entitled "General Requirements for Installation of Pipelines" of this section and with the requirements of ASTM D2321 for laying and joining pipe and fittings. Make joints with the gaskets specified for joints with this piping and assemble in accordance with the requirements of ASTM D2321 for assembly of joints. Make joints to other pipe materials in accordance with the recommendations of the plastic pipe manufacturer.

3.1.2.4 Installation of PVC Plastic Pressure Pipe and Fittings

Unless otherwise specified, install pipe and fittings in accordance with paragraph entitled "General Requirements for Installation of Pipelines" of this section; with the requirements of AWWA C605 for laying of pipe, joining PVC pipe to fittings and accessories, and setting of hydrants, valves, and fittings; and with the recommendations for pipe joint assembly and appurtenance installation in AWWA M23, Chapter 7, "Installation."

a. Pipe Less Than 4 Inch Diameter:

(1) Threaded joints shall be made by wrapping the male threads with joint tape or by applying an approved thread lubricant, then threading the joining members together. The joints shall be tightened with strap wrenches which will not damage the pipe and fittings. The joint shall be tightened no more than 2 threads past hand-tight.

(2) Push-On Joints: The ends of pipe for push-on joints shall be beveled to facilitate assembly. Pipe shall be marked to indicate when the pipe is fully seated. The gasket shall be lubricated to prevent displacement. Care shall be exercised to ensure that the gasket remains in proper position in the bell or coupling while making the joint.

(3) Solvent-weld joints shall comply with the manufacturer's instructions.

b. Pipe 4 Inch Diameter Joints: Make push-on joints with the elastomeric gaskets specified for this type joint, using either elastomeric-gasket bell-end pipe or elastomeric-gasket couplings. For pipe-to-pipe push-on joint connections, use only pipe with push-on joint ends having factory-made bevel; for push-on joint connections to fittings, cut spigot end of pipe off square and re-bevel pipe end to a bevel approximately the same as that on ductile-iron pipe used for the same type of joint. Use an approved lubricant recommended by the pipe

manufacturer for push-on joints. Assemble push-on joints for pipe-to-pipe joint connections in accordance with the requirements of AWWA C605 for laying the pipe and the recommendations in AWWA M23, Chapter 7, "Installation," for pipe joint assembly. Assemble push-on joints for connection to fittings in accordance with the requirements of AWWA C605 for joining PVC pipe to fittings and accessories and with the applicable requirements of AWWA C600 for joint assembly. Make compression-type joints/mechanical-joints with the gaskets, glands, bolts, nuts, and internal stiffeners specified for this type joint and assemble in accordance with the requirements of AWWA C605 for joining PVC pipe to fittings and accessories, with the applicable requirements of AWWA C600 for joint assembly, and with the recommendations of Appendix A to AWWA C111/A21.11. Cut off spigot end of pipe for compression-type joint/mechanical-joint connections and do not re-bevel.

c. Pipe anchorage: Provide concrete thrust blocks (reaction backing) for pipe anchorage. Size and position thrust blocks as indicated. Use concrete conforming to ASTM C94/C94M having a minimum compressive strength of 2,000 psi at 28 days; or use concrete of a mix not leaner than one part cement, 2 1/2 parts sand, and 5 parts gravel, having the same minimum compressive strength.

3.1.3 Concrete Work

Cast-in-place concrete is included in Section 03 30 00 CAST-IN-PLACE CONCRETE. The pipe shall be supported on a concrete cradle, or encased in concrete where indicated or directed.

3.1.4 Manhole Construction

Construct base slab of cast-in-place concrete or use precast concrete base sections. Make inverts in cast-in-place concrete and precast concrete bases with a smooth-surfaced semi-circular bottom conforming to the inside contour of the adjacent sewer sections. For changes in direction of the sewer and entering branches into the manhole, make a circular curve in the manhole invert of as large a radius as manhole size will permit. For cast-in-place concrete construction, either pour bottom slabs and walls integrally or key and bond walls to bottom slab. No parging will be permitted on interior manhole walls. For precast concrete construction, make joints between manhole sections with the gaskets specified for this purpose; install in the manner specified for installing joints in concrete piping. Parging will not be required for precast concrete manholes. Cast-in-place concrete work shall be in accordance with the requirements specified under paragraph entitled "Concrete Work" of this section. Make joints between concrete manholes and pipes entering manholes with the resilient connectors specified for this purpose; install in accordance with the recommendations of the connector manufacturer. Where a new manhole is constructed on an existing line, remove existing pipe as necessary to construct the manhole. Cut existing pipe so that pipe ends are approximately flush with the interior face of manhole wall, but not protruding into the manhole. Use resilient connectors as previously specified for pipe connectors to concrete manholes.

3.1.5 Miscellaneous Construction and Installation

3.1.5.1 Connecting to Existing Manholes

Pipe connections to existing manholes shall be made so that finish work will conform as nearly as practicable to the applicable requirements

specified for new manholes, including all necessary concrete work, cutting, and shaping. The connection shall be centered on the manhole. Holes for the new pipe shall be of sufficient diameter to allow packing cement mortar around the entire periphery of the pipe but no larger than 1.5 times the diameter of the pipe. Cutting the manhole shall be done in a manner that will cause the least damage to the walls.

3.1.5.2 Metal Work

a. Workmanship and finish: Perform metal work so that workmanship and finish will be equal to the best practice in modern structural shops and foundries. Form iron to shape and size with sharp lines and angles. Do shearing and punching so that clean true lines and surfaces are produced. Make castings sound and free from warp, cold shuts, and blow holes that may impair their strength or appearance. Give exposed surfaces a smooth finish with sharp well-defined lines and arises. Provide necessary rabbets, lugs, and brackets wherever necessary for fitting and support.

b. Field painting: After installation, clean cast-iron frames, covers, gratings, and steps not buried in concrete to bare metal of mortar, rust, grease, dirt, and other deleterious materials and apply a coat of bituminous paint. Do not paint surfaces subject to abrasion.

3.1.6 Installations of Wye Branches

Cutting into piping for connections shall not be done except in special approved cases. When the connecting pipe cannot be adequately supported on undisturbed earth or tamped backfill, the pipe shall be encased in concrete backfill or supported on a concrete cradle as directed. Concrete required because of conditions resulting from faulty construction methods or negligence shall be installed at no additional cost to the Government. The installation of wye branches in an existing sewer shall be made by a method which does not damage the integrity of the existing sewer. One acceptable method consists of removing one pipe section, breaking off the upper half of the bell of the next lower section and half of the running bell of wye section. After placing the new section, it shall be rotated so that the broken half of the bell will be at the bottom. The two joints shall then be made with joint packing and cement mortar.

3.2 FIELD QUALITY CONTROL

3.2.1 Field Tests and Inspections

The Contracting Officer will conduct field inspections and witness field tests specified in this section. Perform field tests and provide labor, equipment, and incidentals required for testing, except that water and electric power needed for field tests will be furnished as set forth in Section 01 50 00 TEMPORARY CONSTRUCTION FACILITIES AND CONTROLS. Be able to produce evidence, when required, that each item of work has been constructed in accordance with the drawings and specifications.

3.2.2 Tests for Nonpressure Lines

Check each straight run of pipeline for gross deficiencies by holding a light in a manhole; it shall show a practically full circle of light through the pipeline when viewed from the adjoining end of line. When pressure piping is used in a nonpressure line for nonpressure use, test this piping as specified for nonpressure pipe.

3.2.2.1 Leakage Tests

Test lines for leakage by either infiltration tests or exfiltration tests, or by low-pressure air tests. Prior to testing for leakage, backfill trench up to at least lower half of pipe. When necessary to prevent pipeline movement during testing, place additional backfill around pipe sufficient to prevent movement, but leaving joints uncovered to permit inspection. When leakage or pressure drop exceeds the allowable amount specified, make satisfactory correction and retest pipeline section in the same manner. Correct visible leaks regardless of leakage test results.

a. Infiltration tests and exfiltration tests: Perform these tests for sewer lines made of the specified materials, not only concrete, in accordance with ASTM C969. Make calculations in accordance with the Appendix to ASTM C969.

b. Low-pressure air tests: Perform tests as follows:

(1) Clay pipelines: Test in accordance with ASTM C828. Allowable pressure drop shall be as given in ASTM C828. Make calculations in accordance with the Appendix to ASTM C828.

(2) Concrete pipelines: Test in accordance with ASTM C924. Allowable pressure drop shall be as given in ASTM C924. Make calculations in accordance with the Appendix to ASTM C924.

(3) Ductile-iron pipelines: Test in accordance with the applicable requirements of ASTM C924. Allowable pressure drop shall be as given in ASTM C924. Make calculations in accordance with the Appendix to ASTM C924.

(4) ABS composite plastic pipelines: Test in accordance with the applicable requirements of UBPPA UNI-B-6. Allowable pressure drop shall be as given in UBPPA UNI-B-6. Make calculations in accordance with the Appendix to UBPPA UNI-B-6.

(5) PVC plastic pipelines: Test in accordance with UBPPA UNI-B-6. Allowable pressure drop shall be as given in UBPPA UNI-B-6. Make calculations in accordance with the Appendix to UBPPA UNI-B-6.

(6) Polypropylene: Test in accordance with ASTM F1417 or UBPPA UNI-B-6. Allowable pressure drop shall be as given in ASTM F1417 or UBPPA UNI-B-6 depending on the specification chosen to follow. Make calculations in accordance with the Appendix to ASTM F1417 or UBPPA UNI-B-6 depending on the specification chosen to follow.

3.2.2.2 Deflection Testing

Perform a deflection test on entire length of installed plastic pipeline on completion of work adjacent to and over the pipeline, including leakage tests, backfilling, placement of fill, grading, paving, concreting, and any other superimposed loads determined in accordance with ASTM D2412. Deflection of pipe in the installed pipeline under external loads shall not exceed 4.5 percent of the average inside diameter of pipe. Determine whether the allowable deflection has been exceeded by use of a pull-through device or a deflection measuring device.

a. Pull-through device: This device shall be a spherical, spheroidal, or

elliptical ball, a cylinder, or circular sections fused to a common shaft. Circular sections shall be so spaced on the shaft that distance from external faces of front and back sections will equal or exceed diameter of the circular section. Pull-through device may also be of a design promulgated by the Uni-Bell Plastic Pipe Association, provided the device meets the applicable requirements specified in this paragraph, including those for diameter of the device, and that the mandrel has a minimum of 9 arms. Ball, cylinder, or circular sections shall conform to the following:

(1) A diameter, or minor diameter as applicable, of 95 percent of the average inside diameter of the pipe; tolerance of plus 0.5 percent will be permitted.

(2) Homogeneous material throughout, shall have a density greater than 1.0 as related to water at 39.2 degrees F, and shall have a surface Brinell hardness of not less than 150.

(3) Center bored and through-bolted with a 1/4 inch minimum diameter steel shaft having a yield strength of not less than 70,000 psi, with eyes or loops at each end for attaching pulling cables.

(4) Each eye or loop shall be suitably backed with a flange or heavy washer such that a pull exerted on opposite end of shaft will produce compression throughout remote end.

b. Deflection measuring device: Sensitive to 1.0 percent of the diameter of the pipe being tested and shall be accurate to 1.0 percent of the indicated dimension. Deflection measuring device shall be approved prior to use.

c. Pull-through device procedure: Pass the pull-through device through each run of pipe, either by pulling it through or flushing it through with water. If the device fails to pass freely through a pipe run, replace pipe which has the excessive deflection and completely retest in same manner and under same conditions.

d. Deflection measuring device procedure: Measure deflections through each run of installed pipe. If deflection readings in excess of 4.5 percent of average inside diameter of pipe are obtained, retest pipe by a run from the opposite direction. If retest continues to show a deflection in excess of 4.5 percent of average inside diameter of pipe, replace pipe which has excessive deflection and completely retest in same manner and under same conditions.

3.2.3 Tests for Pressure Lines

Test pressure lines in accordance with the applicable standard specified in this paragraph, except for test pressures. For hydrostatic pressure test, use a hydrostatic pressure 50 psi in excess of the maximum working pressure of the system, but not less than 100 psi, holding the pressure for a period of not less than one hour. For leakage test, use a hydrostatic pressure not less than the maximum working pressure of the system. Leakage test may be performed at the same time and at the same test pressure as the pressure test. Test ductile-iron pressure lines in accordance with the requirements of AWWA C600 for hydrostatic testing. Leakage on ductile-iron pipelines with mechanical-joints or push-on joints shall not exceed the amounts given in AWWA C600; allow no leakage at joints made by other methods. Test PVC plastic pressure lines in accordance with the requirements of AWWA C605 for

pressure and leakage tests, using the allowable leakage given therein.

3.2.4 Field Tests for Concrete

Field testing requirements are covered in Section 03 30 00 CAST-IN-PLACE CONCRETE

-- End of Section --

THIS PAGE HAS BEEN INTENTIONALLY LEFT BLANK

SECTION 33 40 00

STORM DRAINAGE UTILITIES
02/10

PART 1 GENERAL

1.1 REFERENCES

The publications listed below form a part of this specification to the extent referenced. The publications are referred to within the text by the basic designation only.

AMERICAN ASSOCIATION OF STATE HIGHWAY AND TRANSPORTATION OFFICIALS (AASHTO)

AASHTO M 294	(2013) Standard Specification for Corrugated Polyethylene Pipe, 300- to 1500-mm Diameter

AMERICAN RAILWAY ENGINEERING AND MAINTENANCE-OF-WAY ASSOCIATION (AREMA)

AREMA Eng Man	(2012) Manual for Railway Engineering

ASTM INTERNATIONAL (ASTM)

ASTM A123/A123M	(2013) Standard Specification for Zinc (Hot-Dip Galvanized) Coatings on Iron and Steel Products
ASTM A48/A48M	(2003; R 2012) Standard Specification for Gray Iron Castings
ASTM A536	(1984; R 2009) Standard Specification for Ductile Iron Castings
ASTM A929/A929M	(2001; R 2013) Standard Specification for Steel Sheet, Metallic-Coated by the Hot-Dip Process for Corrugated Steel Pipe
ASTM B26/B26M	(2012) Standard Specification for Aluminum-Alloy Sand Castings
ASTM C1103	(2003; R 2009) Standard Practice for Joint Acceptance Testing of Installed Precast Concrete Pipe Sewer Lines
ASTM C12	(2013a) Standard Practice for Installing Vitrified Clay Pipe Lines
ASTM C139	(2011) Standard Specification for Concrete Masonry Units for Construction of Catch Basins and Manholes
ASTM C1433	(2014) Standard Specification for Precast Reinforced Concrete Box Sections for

	Culverts, Storm Drains, and Sewers
ASTM C231/C231M	(2010) Standard Test Method for Air Content of Freshly Mixed Concrete by the Pressure Method
ASTM C270	(2012a) Standard Specification for Mortar for Unit Masonry
ASTM C32	(2013) Standard Specification for Sewer and Manhole Brick (Made from Clay or Shale)
ASTM C425	(2004; R 2013) Standard Specification for Compression Joints for Vitrified Clay Pipe and Fittings
ASTM C443	(2011) Standard Specification for Joints for Concrete Pipe and Manholes, Using Rubber Gaskets
ASTM C478	(2013) Standard Specification for Precast Reinforced Concrete Manhole Sections
ASTM C506	(2013a) Standard Specification for Reinforced Concrete Arch Culvert, Storm Drain, and Sewer Pipe
ASTM C507	(2013) Standard Specification for Reinforced Concrete Elliptical Culvert, Storm Drain, and Sewer Pipe
ASTM C55	(2011) Concrete Brick
ASTM C62	(2013a) Building Brick (Solid Masonry Units Made from Clay or Shale)
ASTM C76	(2014) Standard Specification for Reinforced Concrete Culvert, Storm Drain, and Sewer Pipe
ASTM C828	(2011) Low-Pressure Air Test of Vitrified Clay Pipe Lines
ASTM C877	(2008) External Sealing Bands for Concrete Pipe, Manholes, and Precast Box Sections
ASTM C923	(2008; R 2013) Standard Specification for Resilient Connectors Between Reinforced Concrete Manhole Structures, Pipes and Laterals
ASTM C924	(2002; R 2009) Testing Concrete Pipe Sewer Lines by Low-Pressure Air Test Method
ASTM C990	(2009) Standard Specification for Joints for Concrete Pipe, Manholes and Precast Box Sections Using Preformed Flexible Joint Sealants

ASTM D1056	(2014) Standard Specification for Flexible Cellular Materials - Sponge or Expanded Rubber
ASTM D1171	(1999; R 2007) Rubber Deterioration - Surface Ozone Cracking Outdoors or Chamber (Triangular Specimens)
ASTM D1557	(2012) Standard Test Methods for Laboratory Compaction Characteristics of Soil Using Modified Effort (56,000 ft-lbf/ft3) (2700 kN-m/m3)
ASTM D1751	(2004; E 2013; R 2013) Standard Specification for Preformed Expansion Joint Filler for Concrete Paving and Structural Construction (Nonextruding and Resilient Bituminous Types)
ASTM D1752	(2004a; R 2013) Standard Specification for Preformed Sponge Rubber Cork and Recycled PVC Expansion
ASTM D1784	(2011) Standard Specification for Rigid Poly(Vinyl Chloride) (PVC) Compounds and Chlorinated Poly(Vinyl Chloride) (CPVC) Compounds
ASTM D2167	(2008) Density and Unit Weight of Soil in Place by the Rubber Balloon Method
ASTM D2321	(2011) Standard Practice for Underground Installation of Thermoplastic Pipe for Sewers and Other Gravity-Flow Applications
ASTM D2729	(2011) Poly(Vinyl Chloride) (PVC) Sewer Pipe and Fittings
ASTM D3034	(2008) Standard Specification for Type PSM Poly(Vinyl Chloride) (PVC) Sewer Pipe and Fittings
ASTM D3212	(2007; R 2013) Standard Specification for Joints for Drain and Sewer Plastic Pipes Using Flexible Elastomeric Seals
ASTM D3350	(2012) Polyethylene Plastics Pipe and Fittings Materials
ASTM D6938	(2010) Standard Test Method for In-Place Density and Water Content of Soil and Soil-Aggregate by Nuclear Methods (Shallow Depth)
ASTM F1417	(2011a) Standard Test Method for Installation Acceptance of Plastic Gravity Sewer Lines Using Low Pressure Air
ASTM F477	(2010) Standard Specification for

	Elastomeric Seals (Gaskets) for Joining Plastic Pipe
ASTM F679	(2013a) Poly(Vinyl Chloride) (PVC) Large-Diameter Plastic Gravity Sewer Pipe and Fittings
ASTM F714	(2013) Polyethylene (PE) Plastic Pipe (SDR-PR) Based on Outside Diameter
ASTM F794	(2003; R 2009) Standard Specification for Poly(Vinyl Chloride) (PVC) Profile Gravity Sewer Pipe and Fittings Based on Controlled Inside Diameter
ASTM F894	(2013) Polyethylene (PE) Large Diameter Profile Wall Sewer and Drain Pipe
ASTM F949	(2010) Poly(Vinyl Chloride) (PVC) Corrugated Sewer Pipe with a Smooth Interior and Fittings

U.S. GREEN BUILDING COUNCIL (USGBC)

LEED NC	(2009) Leadership in Energy and Environmental Design(tm) New Construction Rating System

1.2 SUBMITTALS

Government approval is required for submittals with a "G" designation; submittals not having a "G" designation are for Contractor Quality Control approval. Submit the following in accordance with Section 01 33 00 SUBMITTAL PROCEDURES:

SD-03 Product Data

Placing Pipe

Submit printed copies of the manufacturer's recommendations for installation procedures of the material being placed, prior to installation.

SD-04 Samples

Pipe for Culverts and Storm Drains

SD-07 Certificates

Resin Certification
Pipeline Testing
Hydrostatic Test on Watertight Joints
Determination of Density
Frame and Cover for Gratings
LEED Documentation; G

1.3 DELIVERY, STORAGE, AND HANDLING

1.3.1 Delivery and Storage

Materials delivered to site shall be inspected for damage, unloaded, and stored with a minimum of handling. Materials shall not be stored directly on the ground. The inside of pipes and fittings shall be kept free of dirt and debris. Before, during, and after installation, plastic pipe and fittings shall be protected from any environment that would result in damage or deterioration to the material. Keep a copy of the manufacturer's instructions available at the construction site at all times and follow these instructions unless directed otherwise by the Contracting Officer. Solvents, solvent compounds, lubricants, elastomeric gaskets, and any similar materials required to install plastic pipe shall be stored in accordance with the manufacturer's recommendations and shall be discarded if the storage period exceeds the recommended shelf life. Solvents in use shall be discarded when the recommended pot life is exceeded.

1.3.2 Handling

Materials shall be handled in a manner that ensures delivery to the trench in sound, undamaged condition. Pipe shall be carried to the trench, not dragged.

1.3.3 LEED DOCUMENTATION

Reporting for LEED NC Credit MR4: Provide documentation indicating percentages by weight of post-industrial and post-consumer recycled content per unit of product. Indicate relative dollar value of recycled content products to total dollar value of products included in the project. Include a statement indicating cost for each product having recycled content.

Reporting for LEED NC Credit MR5: Provide documentation indicating distance between manufacturing facility and the project site. Indicate distance raw material origin(s) from the project site. Indicate relative dollar value of local/regional materials to total dollar value of products included in the project. Include a statement indicating cost for each product harvested/extracted and manufactured within 500 miles of project.

PART 2 PRODUCTS

2.1 PIPE FOR CULVERTS AND STORM DRAINS

Pipe for culverts and storm drains shall be of the sizes indicated and shall conform to the requirements specified.

2.1.1 Concrete Pipe

Manufactured in accordance with and conforming to ASTM C76, Class III.

2.1.1.1 Reinforced Arch Culvert and Storm Drainpipe

Manufactured in accordance with and conforming to ASTM C506, Class A-III .

2.1.1.2 Reinforced Elliptical Culvert and Storm Drainpipe

Manufactured in accordance with and conforming to ASTM C507. Horizontal elliptical pipe shall be Class HE-III . Vertical elliptical pipe shall be

Class VE-IV .

2.1.2 Perforated Piping

2.1.2.1 Polyvinyl Chloride (PVC) Pipe

ASTM D2729.

2.1.3 PVC Pipe

Submit the pipe manufacturer's resin certification, indicating the cell classification of PVC used to manufacture the pipe, prior to installation of the pipe.

2.1.3.1 Type PSM PVC Pipe

ASTM D3034, Type PSM, maximum SDR 35, produced from PVC certified by the compounder as meeting the requirements of ASTM D1784, minimum cell class 12454-B.

2.1.3.2 Profile PVC Pipe

ASTM F794, Series 46, produced from PVC certified by the compounder as meeting the requirements of ASTM D1784, minimum cell class 12454-B.

2.1.3.3 Smooth Wall PVC Pipe

ASTM F679 produced from PVC certified by the compounder as meeting the requirements of ASTM D1784, minimum cell class 12454-B.

2.1.3.4 Corrugated PVC Pipe

ASTM F949 produced from PVC certified by the compounder as meeting the requirements of ASTM D1784, minimum cell class 12454-B.

2.1.4 Polyethylene (PE) Pipe

Submit the pipe manufacturer's resin certification, indicating the cell classification of PE used to manufacture the pipe, prior to installation of the pipe. The minimum cell classification for polyethylene plastic shall apply to each of the seven primary properties of the cell classification limits in accordance with ASTM D3350.

2.1.4.1 Smooth Wall PE Pipe

ASTM F714, maximum DR of 21 for pipes 3 to 24 inches in diameter and maximum DR of 26 for pipes 26 to 48 inches in diameter. Pipe shall be produced from PE certified by the resin producer as meeting the requirements of ASTM D3350, minimum cell class 335434C.

2.1.4.2 Corrugated PE Pipe

AASHTO M 294, Type S or C. For slow crack growth resistance, acceptance of resins shall be determined by using the notched constant ligament-stress (NCLS) test meeting the requirements of AASHTO M 294. Pipe walls shall have the following properties:

Nominal Size (inch))	Minimum Wall Area (square in/ft)	Minimum Moment of Inertia of Wall Section (in. to the 4th/in.)
12	1.5	0.024
15	1.91	0.053
18	2.34	0.062
24	3.14	0.116
30	3.92	0.163
36	4.50	0.222
42	4.69	0.543
48	5.15	0.543
54	5.67	0.800
60	6.45	0.800

2.1.4.3 Profile Wall PE Pipe

ASTM F894, RSC 160, produced from PE certified by the resin producer as meeting the requirements of ASTM D3350, minimum cell class 334433C. Pipe walls shall have the following properties:

Nominal Size (inch)	Minimum Wall Area (square in/ft)	Minimum Moment	
		Cell Class 334433C	Cell Class 335434C
18	2.96	0.052	0.038
21	4.15	0.070	0.051
24	4.66	0.081	0.059
27	5.91	0.125	0.091
30	5.91	0.125	0.091
33	6.99	0.161	0.132
36	7.81	0.202	0.165
42	8.08	0.277	0.227
48	8.82	0.338	0.277

2.2 DRAINAGE STRUCTURES

2.2.1 Flared End Sections

Sections shall be of a standard design fabricated from zinc coated steel sheets meeting requirements of ASTM A929/A929M.

2.2.2 Precast Reinforced Concrete Box

Manufactured in accordance with and conforming to ASTM C1433.

2.3 MISCELLANEOUS MATERIALS

2.3.1 Concrete

Unless otherwise specified, concrete and reinforced concrete shall conform to the requirements for 4000 psi concrete under Section 03 30 00 CAST-IN-PLACE CONCRETE. The concrete mixture shall have air content by volume of concrete, based on measurements made immediately after discharge from the mixer, of 5 to 7 percent when maximum size of coarse aggregate exceeds 1-1/2 inches. Air content shall be determined in accordance with ASTM C231/C231M. The concrete covering over steel reinforcing shall not be less than 1 inch thick for covers and not less than 1-1/2 inches thick for walls and flooring. Concrete covering deposited directly against the ground shall have a thickness of at least 3 inches between steel and ground. Expansion-joint filler material shall conform to ASTM D1751, or ASTM D1752, or shall be resin-impregnated fiberboard conforming to the physical requirements of ASTM D1752.

2.3.2 Mortar

Mortar for pipe joints, connections to other drainage structures, and brick or block construction shall conform to ASTM C270, Type M, except that the maximum placement time shall be 1 hour. The quantity of water in the mixture shall be sufficient to produce a stiff workable mortar but in no case shall exceed 7 gallons of water per sack of cement. Water shall be clean and free of harmful acids, alkalis, and organic impurities. The mortar shall be used within 30 minutes after the ingredients are mixed with water. The inside of the joint shall be wiped clean and finished smooth. The mortar head on the outside shall be protected from air and sun with a proper covering until satisfactorily cured.

2.3.3 Precast Concrete Segmental Blocks

Precast concrete segmental block shall conform to ASTM C139, not more than 8 inches thick, not less than 8 inches long, and of such shape that joints can be sealed effectively and bonded with cement mortar.

2.3.4 Brick

Brick shall conform to ASTM C62, Grade SW; ASTM C55, Grade S-I or S-II; or ASTM C32, Grade MS. Mortar for jointing and plastering shall consist of one part portland cement and two parts fine sand. Lime may be added to the mortar in a quantity not more than 25 percent of the volume of cement. The joints shall be filled completely and shall be smooth and free from surplus mortar on the inside of the structure. Brick structures shall be plastered with 1/2 inch of mortar over the entire outside surface of the walls. For square or rectangular structures, brick shall be laid in stretcher courses with a header course every sixth course. For round structures, brick shall

be laid radially with every sixth course a stretcher course.

2.3.5 Precast Reinforced Concrete Manholes

Conform to ASTM C478. Joints between precast concrete risers and tops shall be made with flexible watertight, rubber-type gaskets meeting the requirements of paragraph JOINTS.

2.3.6 Prefabricated Corrugated Metal Manholes

Manholes shall be of the type and design recommended by the manufacturer. Manholes shall be complete with frames and cover, or frames and gratings.

2.3.7 Frame and Cover for Gratings

Submit certification on the ability of frame and cover or gratings to carry the imposed live load. Frame and cover for gratings shall be cast gray iron, ASTM A48/A48M, Class 35B; cast ductile iron, ASTM A536, Grade 65-45-12; or cast aluminum, ASTM B26/B26M, Alloy 356.OT6. Weight, shape, size, and waterway openings for grates and curb inlets shall be as indicated on the plans. The word "Storm Sewer" shall be stamped or cast into covers so that it is plainly visible.

2.3.8 Joints

2.3.8.1 Flexible Watertight Joints

a. Materials: Flexible watertight joints shall be made with plastic or rubber-type gaskets for concrete pipe and with factory-fabricated resilient materials for clay pipe. The design of joints and the physical requirements for preformed flexible joint sealants shall conform to ASTM C990, and rubber-type gaskets shall conform to ASTM C443. Factory-fabricated resilient joint materials shall conform to ASTM C425. Gaskets shall have not more than one factory-fabricated splice, except that two factory-fabricated splices of the rubber-type gasket are permitted if the nominal diameter of the pipe being gasketed exceeds 54 inches.

b. Test Requirements: Watertight joints shall be tested and shall meet test requirements of paragraph HYDROSTATIC TEST ON WATERTIGHT JOINTS. Rubber gaskets shall comply with the oil resistant gasket requirements of ASTM C443. Certified copies of test results shall be delivered to the Contracting Officer before gaskets or jointing materials are installed. Alternate types of watertight joint may be furnished, if specifically approved.

2.3.8.2 External Sealing Bands

Requirements for external sealing bands shall conform to ASTM C877.

2.3.8.3 Flexible Watertight, Gasketed Joints

a. Gaskets: When infiltration or exfiltration is a concern for pipe lines, the couplings may be required to have gaskets. The closed-cell expanded rubber gaskets shall be a continuous band approximately 7 inches wide and approximately 3/8 inch thick, meeting the requirements of ASTM D1056, Type 2 A1, and shall have a quality retention rating of not less than 70 percent when tested for weather resistance by ozone chamber exposure, Method B of ASTM D1171. Rubber O-ring gaskets shall

be 13/16 inch in diameter for pipe diameters of 36 inches or smaller and 7/8 inch in diameter for larger pipe having 1/2 inch deep end corrugation. Rubber O-ring gaskets shall be 1-3/8 inches in diameter for pipe having 1 inch deep end corrugations. O-rings shall meet the requirements of ASTM C990 or ASTM C443. Preformed flexible joint sealants shall conform to ASTM C990, Type B.

b. Connecting Bands: Connecting bands shall be of the type, size and sheet thickness of band, and the size of angles, bolts, rods and lugs as indicated or where not indicated as specified in the applicable standards or specifications for the pipe. Exterior rivet heads in the longitudinal seam under the connecting band shall be countersunk or the rivets shall be omitted and the seam welded. Watertight joints shall be tested and shall meet the test requirements of paragraph HYDROSTATIC TEST ON WATERTIGHT JOINTS.

2.3.8.4 PVC Plastic Pipes

Joints shall be solvent cement or elastomeric gasket type in accordance with the specification for the pipe and as recommended by the pipe manufacturer.

2.3.8.5 Smooth Wall PE Plastic Pipe

Pipe shall be joined using butt fusion method as recommended by the pipe manufacturer.

2.3.8.6 Corrugated PE Plastic Pipe

Pipe joints shall be water tight and shall conform to the requirements in AASHTO M 294. Water tight joints shall be made using a PE coupling and rubber gaskets as recommended by the pipe manufacturer. Rubber gaskets shall conform to ASTM F477.

2.3.8.7 Profile Wall PE Plastic Pipe

Joints shall be gasketed or thermal weld type with integral bell in accordance with ASTM F894.

2.4 STEEL LADDER

Steel ladder shall be provided where the depth of the storm drainage structure exceeds 12 feet. These ladders shall be not less than 16 inches in width, with 3/4 inch diameter rungs spaced 12 inches apart. The two stringers shall be a minimum 3/8 inch thick and 2-1/2 inches wide. Ladders and inserts shall be galvanized after fabrication in conformance with ASTM A123/A123M.

2.5 DOWNSPOUT BOOTS

Boots used to connect exterior downspouts to the storm-drainage system shall be of gray cast iron conforming to ASTM A48/A48M, Class 30B or 35B. Shape and size shall be as indicated.

2.6 RESILIENT CONNECTORS

Flexible, watertight connectors used for connecting pipe to manholes and inlets shall conform to ASTM C923.

2.7 HYDROSTATIC TEST ON WATERTIGHT JOINTS

2.7.1 Concrete, Clay, PVC, PE and PP Pipe

A hydrostatic test shall be made on the watertight joint types as proposed. Only one sample joint of each type needs testing; however, if the sample joint fails because of faulty design or workmanship, an additional sample joint may be tested. During the test period, gaskets or other jointing material shall be protected from extreme temperatures which might adversely affect the performance of such materials. Performance requirements for joints in reinforced and nonreinforced concrete pipe shall conform to ASTM C990 or ASTM C443. Test requirements for joints in clay pipe shall conform to ASTM C425. Test requirements for joints in PVC, PE, and PP plastic pipe shall conform to ASTM D3212.

2.8 EROSION CONTROL RIPRAP

Provide nonerodible rock not exceeding 15 inches in its greatest dimension and choked with sufficient small rocks to provide a dense mass with a minimum thickness of as indicated.

PART 3 EXECUTION

3.1 EXCAVATION FOR PIPE CULVERTS, STORM DRAINS, AND DRAINAGE STRUCTURES

Excavation of trenches, and for appurtenances and backfilling for culverts and storm drains, shall be in accordance with the applicable portions of Section 31 23 00.00 20 EXCAVATION AND FILL and the requirements specified below.

3.1.1 Trenching

The width of trenches at any point below the top of the pipe shall be not greater than the outside diameter of the pipe plus 36 inches to permit satisfactory jointing and thorough tamping of the bedding material under and around the pipe. Sheeting and bracing, where required, shall be placed within the trench width as specified, without any overexcavation. Where trench widths are exceeded, redesign with a resultant increase in cost of stronger pipe or special installation procedures will be necessary. Cost of this redesign and increased cost of pipe or installation shall be borne by the Contractor without additional cost to the Government.

3.1.2 Removal of Unstable Material

Where wet or otherwise unstable soil incapable of properly supporting the pipe, as determined by the Contracting Officer, is unexpectedly encountered in the bottom of a trench, such material shall be removed to the depth required and replaced to the proper grade with select granular material, compacted as provided in paragraph BACKFILLING. When removal of unstable material is due to the fault or neglect of the Contractor while performing shoring and sheeting, water removal, or other specified requirements, such removal and replacement shall be performed at no additional cost to the Government.

3.2 BEDDING

The bedding surface for the pipe shall provide a firm foundation of uniform density throughout the entire length of the pipe.

3.2.1 Concrete Pipe Requirements

When no bedding class is specified or detailed on the drawings, concrete pipe shall be bedded in granular material minimum 4 inch in depth in trenches with soil foundation. Depth of granular bedding in trenches with rock foundation shall be 1/2 inch in depth per foot of depth of fill, minimum depth of bedding shall be 8 inch up to maximum depth of 24 inches. The middle third of the granular bedding shall be loosely placed. Bell holes and depressions for joints shall be removed and formed so entire barrel of pipe is uniformly supported. The bell hole and depressions for the joints shall be not more than the length, depth, and width required for properly making the particular type of joint.

3.2.2 Clay Pipe Requirements

Bedding for clay pipe shall be as specified by ASTM C12.

3.2.3 Plastic Pipe

Bedding for PVC, PE, and PP pipe shall meet the requirements of ASTM D2321. Use Class IB or II material for bedding, haunching, and initial backfill.

3.3 PLACING PIPE

Each pipe shall be thoroughly examined before being laid; defective or damaged pipe shall not be used. Plastic pipe shall be protected from exposure to direct sunlight prior to laying, if necessary to maintain adequate pipe stiffness and meet installation deflection requirements. Pipelines shall be laid to the grades and alignment indicated. Proper facilities shall be provided for lowering sections of pipe into trenches. Lifting lugs in vertically elongated metal pipe shall be placed in the same vertical plane as the major axis of the pipe. Pipe shall not be laid in water, and pipe shall not be laid when trench conditions or weather are unsuitable for such work. Diversion of drainage or dewatering of trenches during construction shall be provided as necessary. Deflection of installed flexible pipe shall not exceed the following limits:

TYPE OF PIPE	MAXIMUM ALLOWABLE DEFLECTION (percent)
Plastic (PVC, HDPE and PP)	5

Note post installation requirements of paragraph DEFLECTION TESTING in PART 3 of this specification for all pipe products including deflection testing requirements for flexible pipe.

3.3.1 Concrete, Clay, PVC, Ribbed PVC, Ductile Iron and Cast-Iron Pipe

Laying shall proceed upgrade with spigot ends of bell-and-spigot pipe and tongue ends of tongue-and-groove pipe pointing in the direction of the flow.

3.3.2 Elliptical and Elliptical Reinforced Concrete Pipe

The manufacturer's reference lines, designating the top of the pipe, shall be within 5 degrees of a vertical plane through the longitudinal axis of the pipe, during placement. Damage to or misalignment of the pipe shall be prevented in all backfilling operations.

3.3.3 Corrugated PE and Dual Wall and Triple Wall PP Pipe

Laying shall be with the separate sections joined firmly on a bed shaped to line and grade and shall follow manufacturer's recommendations.

3.3.4 Multiple Culverts

Where multiple lines of pipe are installed, adjacent sides of pipe shall be at least half the nominal pipe diameter or 3 feet apart, whichever is less.

3.3.5 Jacking Pipe Through Fills

Methods of operation and installation for jacking pipe through fills shall conform to requirements specified in Volume 1, Chapter 1, Part 4 of AREMA Eng Man.

3.4 JOINTING

3.4.1 Concrete and Clay Pipe

3.4.1.1 Cement-Mortar Bell-and-Spigot Joint

The first pipe shall be bedded to the established grade line, with the bell end placed upstream. The interior surface of the bell shall be thoroughly cleaned with a wet brush and the lower portion of the bell filled with mortar as required to bring inner surfaces of abutting pipes flush and even. The spigot end of each subsequent pipe shall be cleaned with a wet brush and uniformly matched into a bell so that sections are closely fitted. After each section is laid, the remainder of the joint shall be filled with mortar, and a bead shall be formed around the outside of the joint with sufficient additional mortar. If mortar is not sufficiently stiff to prevent appreciable slump before setting, the outside of the joint shall be wrapped or bandaged with cheesecloth to hold mortar in place.

3.4.1.2 Cement-Mortar Oakum Joint for Bell-and-Spigot Pipe

A closely twisted gasket shall be made of jute or oakum of the diameter required to support the spigot end of the pipe at the proper grade and to make the joint concentric. Joint packing shall be in one piece of sufficient length to pass around the pipe and lap at top. This gasket shall be thoroughly saturated with neat cement grout. The bell of the pipe shall be thoroughly cleaned with a wet brush, and the gasket shall be laid in the bell for the lower third of the circumference and covered with mortar. The spigot of the pipe shall be thoroughly cleaned with a wet brush, inserted in the bell, and carefully driven home. A small amount of mortar shall be inserted in the annular space for the upper two-thirds of the circumference. The gasket shall be lapped at the top of the pipe and driven home in the annular space with a caulking tool. The remainder of the annular space shall be filled completely with mortar and beveled at an angle of approximately 45 degrees with the outside of the bell. If mortar is not sufficiently stiff to prevent appreciable slump before setting, the outside of the joint thus made shall be wrapped with cheesecloth. Placing of this type of joint shall be kept at least five joints behind laying operations.

3.4.1.3 Cement-Mortar Diaper Joint for Bell-and-Spigot Pipe

The pipe shall be centered so that the annular space is uniform. The annular space shall be caulked with jute or oakum. Before caulking, the

inside of the bell and the outside of the spigot shall be cleaned.

a. Diaper Bands: Diaper bands shall consist of heavy cloth fabric to hold grout in place at joints and shall be cut in lengths that extend one-eighth of the circumference of pipe above the spring line on one side of the pipe and up to the spring line on the other side of the pipe. Longitudinal edges of fabric bands shall be rolled and stitched around two pieces of wire. Width of fabric bands shall be such that after fabric has been securely stitched around both edges on wires, the wires will be uniformly spaced not less than 8 inches apart. Wires shall be cut into lengths to pass around pipe with sufficient extra length for the ends to be twisted at top of pipe to hold the band securely in place; bands shall be accurately centered around lower portion of joint.

b. Grout: Grout shall be poured between band and pipe from the high side of band only, until grout rises to the top of band at the spring line of pipe, or as nearly so as possible, on the opposite side of pipe, to ensure a thorough sealing of joint around the portion of pipe covered by the band. Silt, slush, water, or polluted mortar grout forced up on the lower side shall be forced out by pouring, and removed.

c. Remainder of Joint: The remaining unfilled upper portion of the joint shall be filled with mortar and a bead formed around the outside of this upper portion of the joint with a sufficient amount of additional mortar. The diaper shall be left in place. Placing of this type of joint shall be kept at least five joints behind actual laying of pipe. No backfilling around joints shall be done until joints have been fully inspected and approved.

3.4.1.4 Cement-Mortar Tongue-and-Groove Joint

The first pipe shall be bedded carefully to the established grade line with the groove upstream. A shallow excavation shall be made underneath the pipe at the joint and filled with mortar to provide a bed for the pipe. The grooved end of the first pipe shall be thoroughly cleaned with a wet brush, and a layer of soft mortar applied to the lower half of the groove. The tongue of the second pipe shall be cleaned with a wet brush; while in horizontal position, a layer of soft mortar shall be applied to the upper half of the tongue. The tongue end of the second pipe shall be inserted in the grooved end of the first pipe until mortar is squeezed out on interior and exterior surfaces. Sufficient mortar shall be used to fill the joint completely and to form a bead on the outside.

3.4.1.5 Cement-Mortar Diaper Joint for Tongue-and-Groove Pipe

The joint shall be of the type described for cement-mortar tongue-and-groove joint in this paragraph, except that the shallow excavation directly beneath the joint shall not be filled with mortar until after a gauze or cheesecloth band dipped in cement mortar has been wrapped around the outside of the joint. The cement-mortar bead at the joint shall be at least 1/2 inch, thick and the width of the diaper band shall be at least 8 inches. The diaper shall be left in place. Placing of this type of joint shall be kept at least five joints behind the actual laying of the pipe. Backfilling around the joints shall not be done until the joints have been fully inspected and approved.

3.4.1.6 Plastic Sealing Compound Joints for Tongue-and-Grooved Pipe

Sealing compounds shall follow the recommendation of the particular manufacturer in regard to special installation requirements. Surfaces to receive lubricants, primers, or adhesives shall be dry and clean. Sealing compounds shall be affixed to the pipe not more than 3 hours prior to installation of the pipe, and shall be protected from the sun, blowing dust, and other deleterious agents at all times. Sealing compounds shall be inspected before installation of the pipe, and any loose or improperly affixed sealing compound shall be removed and replaced. The pipe shall be aligned with the previously installed pipe, and the joint pulled together. If, while making the joint with mastic-type sealant, a slight protrusion of the material is not visible along the entire inner and outer circumference of the joint when the joint is pulled up, the pipe shall be removed and the joint remade. After the joint is made, all inner protrusions shall be cut off flush with the inner surface of the pipe. If non-mastic-type sealant material is used, the "Squeeze-Out" requirement above will be waived.

3.4.1.7 Flexible Watertight Joints

Gaskets and jointing materials shall be as recommended by the particular manufacturer in regard to use of lubricants, cements, adhesives, and other special installation requirements. Surfaces to receive lubricants, cements, or adhesives shall be clean and dry. Gaskets and jointing materials shall be affixed to the pipe not more than 24 hours prior to the installation of the pipe, and shall be protected from the sun, blowing dust, and other deleterious agents at all times. Gaskets and jointing materials shall be inspected before installing the pipe; any loose or improperly affixed gaskets and jointing materials shall be removed and replaced. The pipe shall be aligned with the previously installed pipe, and the joint pushed home. If, while the joint is being made the gasket becomes visibly dislocated the pipe shall be removed and the joint remade.

3.4.1.8 External Sealing Band Joint for Noncircular Pipe

Surfaces to receive sealing bands shall be dry and clean. Bands shall be installed in accordance with manufacturer's recommendations.

3.5 DRAINAGE STRUCTURES

3.5.1 Manholes and Inlets

Construction shall be of reinforced concrete, plain concrete, brick, precast reinforced concrete, precast concrete segmental blocks, prefabricated corrugated metal, or bituminous coated corrugated metal; complete with frames and covers or gratings; and with fixed galvanized steel ladders where indicated. Pipe studs and junction chambers of prefabricated corrugated metal manholes shall be fully bituminous-coated and paved when the connecting branch lines are so treated. Pipe connections to concrete manholes and inlets shall be made with flexible, watertight connectors.

3.5.2 Walls and Headwalls

Construction shall be as indicated.

3.6 STEEL LADDER INSTALLATION

Ladder shall be adequately anchored to the wall by means of steel inserts

spaced not more than 6 feet vertically, and shall be installed to provide at least 6 inches of space between the wall and the rungs. The wall along the line of the ladder shall be vertical for its entire length.

3.7 BACKFILLING

3.7.1 Backfilling Pipe in Trenches

After the pipe has been properly bedded, selected material from excavation or borrow, at a moisture content that will facilitate compaction, shall be placed along both sides of pipe in layers not exceeding 6 inches in compacted depth. The backfill shall be brought up evenly on both sides of pipe for the full length of pipe. The fill shall be thoroughly compacted under the haunches of the pipe. Each layer shall be thoroughly compacted with mechanical tampers or rammers. This method of filling and compacting shall continue until the fill has reached an elevation equal to the midpoint (spring line) of RCP or has reached an elevation of at least 12 inches above the top of the pipe for flexible pipe. The remainder of the trench shall be backfilled and compacted by spreading and rolling or compacted by mechanical rammers or tampers in layers not exceeding 6 inches. Tests for density shall be made as necessary to ensure conformance to the compaction requirements specified below. Where it is necessary, in the opinion of the Contracting Officer, that sheeting or portions of bracing used be left in place, the contract will be adjusted accordingly. Untreated sheeting shall not be left in place beneath structures or pavements.

3.7.2 Backfilling Pipe in Fill Sections

For pipe placed in fill sections, backfill material and the placement and compaction procedures shall be as specified below. The fill material shall be uniformly spread in layers longitudinally on both sides of the pipe, not exceeding 6 inches in compacted depth, and shall be compacted by rolling parallel with pipe or by mechanical tamping or ramming. Prior to commencing normal filling operations, the crown width of the fill at a height of 12 inches above the top of the pipe shall extend a distance of not less than twice the outside pipe diameter on each side of the pipe or 12 feet, whichever is less. After the backfill has reached at least 12 inches above the top of the pipe, the remainder of the fill shall be placed and thoroughly compacted in layers not exceeding 6 inches. Use select granular material for this entire region of backfill for flexible pipe installations.

3.7.3 Movement of Construction Machinery

When compacting by rolling or operating heavy equipment parallel with the pipe, displacement of or injury to the pipe shall be avoided. Movement of construction machinery over a culvert or storm drain at any stage of construction shall be at the Contractor's risk. Any damaged pipe shall be repaired or replaced.

3.7.4 Compaction

3.7.4.1 General Requirements

Cohesionless materials include gravels, gravel-sand mixtures, sands, and gravelly sands. Cohesive materials include clayey and silty gravels, gravel-silt mixtures, clayey and silty sands, sand-clay mixtures, clays, silts, and very fine sands. When results of compaction tests for

moisture-density relations are recorded on graphs, cohesionless soils will show straight lines or reverse-shaped moisture-density curves, and cohesive soils will show normal moisture-density curves.

3.7.4.2 Minimum Density

Backfill over and around the pipe and backfill around and adjacent to drainage structures shall be compacted at the approved moisture content to the following applicable minimum density, which will be determined as specified below.

a. Under airfield and heliport pavements, paved roads, streets, parking areas, and similar-use pavements including adjacent shoulder areas, the density shall be not less than 90 percent of maximum density for cohesive material and 95 percent of maximum density for cohesionless material, up to the elevation where requirements for pavement subgrade materials and compaction shall control.

b. Under unpaved or turfed traffic areas, density shall not be less than 90 percent of maximum density for cohesive material and 95 percent of maximum density for cohesionless material.

c. Under nontraffic areas, density shall be not less than that of the surrounding material.

3.7.5 Determination of Density

Testing is the responsibility of the Contractor and performed at no additional cost to the Government. Testing shall be performed by an approved commercial testing laboratory or by the Contractor subject to approval. Tests shall be performed in sufficient number to ensure that specified density is being obtained. Laboratory tests for moisture-density relations shall be made in accordance with ASTM D1557 except that mechanical tampers may be used provided the results are correlated with those obtained with the specified hand tamper. Field density tests shall be determined in accordance with ASTM D2167 or ASTM D6938. When ASTM D6938 is used, the calibration curves shall be checked and adjusted, if necessary, using the sand cone method as described in paragraph Calibration of the referenced publications. ASTM D6938 results in a wet unit weight of soil and ASTM D6938 shall be used to determine the moisture content of the soil. The calibration curves furnished with the moisture gauges shall be checked along with density calibration checks as described in ASTM D6938. Test results shall be furnished the Contracting Officer. The calibration checks of both the density and moisture gauges shall be made at the beginning of a job on each different type of material encountered and at intervals as directed.

3.8 PIPELINE TESTING

3.8.1 Leakage Tests

Lines shall be tested for leakage by low pressure air or water testing or exfiltration tests, as appropriate. Low pressure air testing for vitrified clay pipes shall conform to ASTM C828. Low pressure air testing for concrete pipes shall conform to ASTM C924. Low pressure air testing for plastic pipe shall conform to ASTM F1417. Testing of individual joints for leakage by low pressure air or water shall conform to ASTM C1103. Prior to exfiltration tests, the trench shall be backfilled up to at least the lower half of the pipe. If required, sufficient additional backfill shall be

placed to prevent pipe movement during testing, leaving the joints uncovered to permit inspection. Visible leaks encountered shall be corrected regardless of leakage test results. When the water table is 2 feet or more above the top of the pipe at the upper end of the pipeline section to be tested, infiltration shall be measured using a suitable weir or other device acceptable to the Contracting Officer. An exfiltration test shall be made by filling the line to be tested with water so that a head of at least 2 feet is provided above both the water table and the top of the pipe at the upper end of the pipeline to be tested. The filled line shall be allowed to stand until the pipe has reached its maximum absorption, but not less than 4 hours. After absorption, the head shall be reestablished. The amount of water required to maintain this water level during a 2-hour test period shall be measured. Leakage as measured by the exfiltration test shall not exceed 0.2 gallons per inch in diameter per 100 feet of pipeline per hour. When leakage exceeds the maximum amount specified, satisfactory correction shall be made and retesting accomplished.

3.8.2 Deflection Testing

No sooner than 30 days after completion of installation and final backfill, an initial post installation inspection shall be accomplished. Clean or flush all lines prior to inspection. Perform a deflection test on entire length of installed flexible pipeline on completion of work adjacent to and over the pipeline, including leakage tests, backfilling, placement of fill, grading, paving, concreting, and any other superimposed loads. Deflection of pipe in the installed pipeline under external loads shall not exceed limits in paragraph PLACING PIPE above as percent of the average inside diameter of pipe. Determine whether the allowable deflection has been exceeded by use of a laser profiler or mandrel.

a. Laser Profiler Inspection: If deflection readings in excess of the allowable deflection of average inside diameter of pipe are obtained, remove pipe which has excessive deflection, and replace with new pipe. Initial post installation inspections of the pipe interior with laser profiling equipment shall utilize low barrel distortion video equipment for pipe sizes 48 inches or less. Use a camera with lighting suitable to allow a clear picture of the entire periphery of the pipe interior. Center the camera in the pipe both vertically and horizontally and be able to pan and tilt to a 90 degree angle with the axis of the pipe rotating 360 degrees. Use equipment to move the camera through the pipe that will not obstruct the camera's view or interfere with proper documentation of the pipe's condition. The video image shall be clear, focused, and relatively free from roll static or other image distortion qualities that would prevent the reviewer from evaluating the condition of the pipe. For initial post installation inspections for pipe sizes larger than 48 inches, visual inspection shall be completed of the pipe interior.

b. Pull-Through Device Inspection: Pass the pull-through device through each run of pipe by pulling it by hand. If deflection readings in excess of the allowable deflection of average inside diameter of pipe are obtained, retest pipe by a run from the opposite direction. If retest continues to show excess allowable deflections of the average inside diameter of pipe, remove pipe which has excessive deflection, replace with new pipe, and completely retest in same manner and under same conditions. Pull-through device: The mandrel shall be rigid, nonadjustable having a minimum of 9 fins, including pulling rings at each end, engraved with the nominal pipe size and mandrel outside diameter. The mandrel shall be 5 percent less than the

certified-actual pipe diameter for Plastic Pipe, 5 percent less than the certified-actual pipe diameter for Corrugated Steel and Aluminum Alloy, 3 percent less than the certified-actual pipe diameter for Concrete-Lined Corrugated Steel and Ductile Iron Culvert provided by manufacturer. When mandrels are utilized to verify deflection of flexible pipe products, the Government will verify the mandrel OD through the use of proving rings that are manufactured with an opening that is certified to be as shown above.

c. Deflection measuring device: Shall be approved by the Contracting Officer prior to use.

d. Warranty period test: Pipe found to have a deflection of greater than allowable deflection in paragraph PLACING PIPE above, just prior to end of one-year warranty period shall be replaced with new pipe and tested as specified for leakage and deflection. Inspect 100 percent of all pipe systems under the travel lanes, including curb and gutter. Random inspections of the remaining pipe system outside of the travel lanes shall represent at least 10 percent of the total pipe footage of each pipe size. Inspections shall be made, depending on the pipe size, with video camera or visual observations. In addition, for flexible pipe installations, perform deflection testing on 100 percent of all pipes under the travel lanes, including curb and gutter, with either a laser profiler or 9-fin mandrel. For flexible pipe, random deflection inspections of the pipe system outside of the travel lanes shall represent at least 10 percent of the total pipe footage of each pipe size. When mandrels are utilized to verify deflection of flexible pipe products during the final post installation inspection, the Government will verify the mandrel OD through the use of proving rings.

3.8.3 Post-Installation Inspection

One hundred percent of all reinforced concrete pipe installations shall be checked for joint separations, soil migration through the joint, cracks greater than 0.01 inches, settlement and alignment. One hundred percent of all flexible pipes (HDPE, PVC, CMP, PP) shall be checked for rips, tears, joint separations, soil migration through the joint, cracks, localized bucking, bulges, settlement and alignment.

a. Replace pipes having cracks greater than 0.1 inches in width or deflection greater than 5 percent deflection. An engineer shall evaluate all pipes with cracks greater than 0.01 inches but less than 0.10 inches to determine if any remediation or repair is required. RCP with crack width less than 0.10 inches and located in a non-corrosive environment (pH 5.5) are generally acceptable. Repair or replace any pipe with crack exhibiting displacement across the crack, exhibiting bulges, creases, tears, spalls, or delamination.

b. Reports: The deflection results and finial post installation inspection report shall include: a copy of all video taken, pipe location identification, equipment used for inspection, inspector name, deviation from design, grade, deviation from line, deflection and deformation of flexible pipe systems, inspector notes, condition of joints, condition of pipe wall (e.g. distress, cracking, wall damage dents, bulges, creases, tears, holes, etc.).

3.9 FIELD PAINTING

After installation, clean cast-iron frames, covers, gratings, and steps not

buried in masonry or concrete to bare metal of mortar, rust, grease, dirt, and other deleterious materials and apply a coat of bituminous paint. Do not paint surfaces subject to abrasion.

-- End of Section --

SECTION 33 71 01

OVERHEAD TRANSMISSION AND DISTRIBUTION
07/06

PART 1 GENERAL

1.1 REFERENCES

The publications listed below form a part of this specification to the extent referenced. The publications are referred to within the text by the basic designation only.

ASME INTERNATIONAL (ASME)

ASME B16.11	(2011) Forged Fittings, Socket-Welding and Threaded

ASTM INTERNATIONAL (ASTM)

ASTM A123/A123M	(2013) Standard Specification for Zinc (Hot-Dip Galvanized) Coatings on Iron and Steel Products
ASTM A153/A153M	(2009) Standard Specification for Zinc Coating (Hot-Dip) on Iron and Steel Hardware
ASTM A53/A53M	(2012) Standard Specification for Pipe, Steel, Black and Hot-Dipped, Zinc-Coated, Welded and Seamless
ASTM B117	(2011) Standard Practice for Operating Salt Spray (Fog) Apparatus
ASTM B3	(2013) Standard Specification for Soft or Annealed Copper Wire
ASTM D1654	(2008) Evaluation of Painted or Coated Specimens Subjected to Corrosive Environments

INSTITUTE OF ELECTRICAL AND ELECTRONICS ENGINEERS (IEEE)

IEEE 100	(2000; Archived) The Authoritative Dictionary of IEEE Standards Terms
IEEE C135.22	(1988) Standard for Zinc-Coated Ferrous Pole-Top Insulator Pins with Lead Threads for Overhead Line Construction
IEEE C2	(2012; Errata 2012; INT 1-4 2012; INT 5-7 2013) National Electrical Safety Code
IEEE C37.42	(2009) Standard Specifications for High-Voltage (> 1000 V) Expulsion-Type Distribution-Class Fuses, Fuse and Disconnecting Cutouts, Fuse Disconnecting

	Switches, and Fuse Links, and Accessories Used with These Devices
IEEE C62.11	(2012) Standard for Metal-Oxide Surge Arresters for Alternating Current Power Circuits (>1kV)

INTERNATIONAL ELECTRICAL TESTING ASSOCIATION (NETA)

NETA ATS	(2013) Standard for Acceptance Testing Specifications for Electrical Power Equipment and Systems

NATIONAL FIRE PROTECTION ASSOCIATION (NFPA)

NFPA 70	(2014; AMD 1 2013; Errata 1 2013; AMD 2 2013; Errata 2 2013; AMD 3 2014; Errata 3-4 2014; AMD 4-6 2014) National Electrical Code

U.S. DEPARTMENT OF AGRICULTURE (USDA)

RUS 202-1	(2004) List of Materials Acceptable for Use on Systems of RUS Electrification Borrowers

UNDERWRITERS LABORATORIES (UL)

UL 467	(2007) Grounding and Bonding Equipment
UL 486A-486B	(2013; Reprint Dec 2013) Wire Connectors
UL 510	(2005; Reprint Jul 2013) Polyvinyl Chloride, Polyethylene and Rubber Insulating Tape
UL 6	(2007; reprint Nov 2010) Electrical Rigid Metal Conduit-Steel

1.2 RELATED REQUIREMENTS

Section 26 08 00 APPARATUS INSPECTION AND TESTING applies to this section with additions and modifications specified herein.

1.3 DEFINITIONS

Unless otherwise specified or indicated, electrical and electronics terms used in these specifications, and on the drawings, shall be as defined in IEEE 100.

1.4 SUBMITTALS

Government approval is required for submittals with a "G" designation; submittals not having a "G" designation are for Contractor Quality Control approval. The following shall be submitted in accordance with Section 01 33 00 SUBMITTAL PROCEDURES:

SD-03 Product Data

Cutouts; G

Surge arresters; G

Anchors

SD-06 Test Reports

Field Quality Control; G

Ground resistance test reports; G

Submit report of the acceptance test results as specified by paragraph entitled "Field Quality Control"

SD-07 Certificates

Public Utility - Electrical Contractor's License; G

Submit certification from the manufacturer indicating conformance with the paragraph entitled "Specified Transformer Losses."

SD-10 Operation and Maintenance Data

Operation and Maintenance Manuals, Data Package 5; G

Submit operation and maintenance data in accordance with Section 01 78 23 OPERATION AND MAINTENANCE DATA and as specified herein.

1.5 QUALITY ASSURANCE

1.5.1 Utility Contractor Qualifications

The Contractor must possess a valid North Carolina Public Utility - Electrical Contractor's License or equivalent from another state and be insured to do such work.

1.5.2 Regulatory Requirements

In each of the publications referred to herein, consider the advisory provisions to be mandatory, as though the word, "shall" had been substituted for "should" wherever it appears. Interpret references in these publications to the "authority having jurisdiction," or words of similar meaning, to mean the Contracting Officer. Equipment, materials, installation, and workmanship shall be in accordance with the mandatory and advisory provisions of NFPA 70 and IEEE C2 unless more stringent requirements are specified or indicated.

1.5.3 Standard Products

Provide materials and equipment that are products of manufacturers regularly engaged in the production of such products which are of equal material, design and workmanship. Products shall have been in satisfactory commercial or industrial use for 2 years prior to bid opening. The 2-year period shall include applications of equipment and materials under similar circumstances and of similar size. The product shall have been on sale on the commercial market through advertisements, manufacturers' catalogs, or brochures during the 2-year period. Where two or more items of the same

class of equipment are required, these items shall be products of a single manufacturer; however, the component parts of the item need not be the products of the same manufacturer unless stated in this section.

1.5.3.1 Alternative Qualifications

Products having less than a 2-year field service record will be acceptable if a certified record of satisfactory field operation for not less than 6000 hours, exclusive of the manufacturers' factory or laboratory tests, is furnished.

1.5.3.2 Material and Equipment Manufacturing Date

Products manufactured more than 3 years prior to date of delivery to site shall not be used, unless specified otherwise.

1.5.4 Ground Resistance Test Reports

Submit the measured ground resistance of grounding system. When testing grounding electrodes and grounding systems, identify each grounding electrode and each grounding system for testing. Include the test method and test setup (i.e. pin location) used to determine ground resistance and soil conditions at the time the measurements were made.

1.6 MAINTENANCE

1.6.1 Additions to Operations and Maintenance Data

In addition to requirements of Data Package 5, include the following in the operation and maintenance manuals provided:

a. Assembly and installation drawings

b. Prices for spare parts and supply list

c. Date of purchase

1.7 DELIVERY, STORAGE, AND HANDLING

Devices and equipment shall be visually inspected by the Contractor when received and prior to acceptance from conveyance. Stored items shall be protected from the environment in accordance with the manufacturer's published instructions. Damaged items shall be replaced.

1.8 WARRANTY

The equipment items shall be supported by service organizations which are reasonably convenient to the equipment installation in order to render satisfactory service to the equipment on a regular and emergency basis during the warranty period of the contract.

PART 2 PRODUCTS

2.1 MATERIALS AND EQUIPMENT

Consider materials specified herein or shown on contract drawings which are identical to materials listed in RUS 202-1 as conforming to requirements. Equipment and component items, not hot-dip galvanized or porcelain enamel finished, shall be provided with corrosion-resistant finishes which shall

withstand 120 hours of exposure to the salt spray test specified in ASTM B117 without loss of paint or release of adhesion of the paint primer coat to the metal surface in excess of 1/16 inch from the test mark. The described test mark and test evaluation shall be in accordance with ASTM D1654 with a rating of not less than 7 in accordance with TABLE 1, (procedure A). Cut edges or otherwise damaged surfaces of hot-dip galvanized sheet steel or mill galvanized sheet steel shall be coated with a zinc rich paint conforming to the manufacturer's standard.

2.2 CROSSARMS AND BRACKETS

2.2.1 Armless Construction

Pole mounting brackets for line-post or pin insulators and eye bolts for suspension insulators shall be as shown. Brackets shall be attached to poles with a minimum of two bolts. Brackets may be either provided integrally as part of an insulator or attached to an insulator with a suitable stud. Bracket mounting surface shall be suitable for the shape of the pole. Brackets for wood poles shall have wood gripping members. Horizontal offset brackets shall have a 5-degree uplift angle. Pole top brackets shall conform to IEEE C135.22, except for modifications necessary to provide support for a line-post insulator. Brackets shall provide a strength exceeding that of the required insulator strength, but in no case less than a 2800 pound cantilever strength.

2.3 HARDWARE

Hardware shall be hot-dip galvanized in accordance with ASTM A153/A153M and ASTM A123/A123M.

2.4 OVERHEAD CONDUCTORS, CONNECTORS AND SPLICES

Conductors of bare aluminum alloy (AAAC) of sizes and types indicated.

2.4.1 Connectors and Splices

Connectors and splices shall be of copper alloys for copper conductors, aluminum alloys for aluminum-composition conductors, and a type designed to minimize galvanic corrosion for copper to aluminum-composition conductors. Aluminum-composition, aluminum-composition to copper, and copper-to-copper shall comply with UL 486A-486B.

2.5 ANCHORS AND ANCHOR RODS

Anchors shall present holding area indicated on drawings as a minimum. Anchor rods shall be triple thimble-eye, one inch diameter by 8 feet long. Anchors and anchor rods shall be hot dip galvanized.

2.5.1 Screw Anchors

Screw type anchors having a manufacturer's rating of not less than 10,000 pounds in loose to medium sand/clay soil, Class 6 and extra heavy pipe rods conforming to ASTM A53/A53M, Schedule 80, and couplings conforming to ASME B16.11.

2.6 GROUNDING AND BONDING

2.6.1 Driven Ground Rods

Provide copper-clad steel ground rods conforming to UL 467 not less than 3/4 inch in diameter by 10 feet in length. Sectional type rods may be used for rods 20 feet or longer.

2.6.2 Grounding Conductors

ASTM B3. Provide soft drawn copper wire ground conductors a minimum No. 4 AWG. Ground wire protectors shall be PVC.

2.6.3 Grounding Connections

UL 467. Exothermic weld or compression connector.

2.7 SURGE ARRESTERS

IEEE C62.11, metal oxide, polymeric-housed, surge arresters arranged for equipment mounting. RMS voltage rating shall be 9 kV. Arresters shall be Distribution class.

2.8 FUSED CUTOUTS

Open type fused cutouts rated 100 amperes and 10,000 amperes symmetrical interrupting current at 8.3/15 kV gnd Y , conforming to IEEE C37.42. Type K fuses conforming to IEEE C37.42 with ampere ratings as indicated . Open link type fuse cutouts are not acceptable.

2.9 CONDUIT RISERS AND CONDUCTORS

The riser shield shall be a rigid galvanized steel conduit, as indicated, and conforming to UL 6. Provide conductors and terminations as specified in Section 33 71 02 UNDERGROUND ELECTRICAL DISTRIBUTION.

2.10 ELECTRICAL TAPES

Tapes shall be UL listed for electrical insulation and other purposes in wire and cable splices. Terminations, repairs and miscellaneous purposes, electrical tapes shall comply with UL 510.

2.11 CAULKING COMPOUND

Compound for sealing of conduit risers shall be of a puttylike consistency workable with hands at temperatures as low as 35 degrees F, shall not slump at a temperature of 300 degrees F, and shall not harden materially when exposed to air. Compound shall readily caulking or adhere to clean surfaces of the materials with which it is designed to be used. Compound shall have no injurious effects upon the workmen or upon the materials.

PART 3 EXECUTION

3.1 INSTALLATION

Provide overhead pole line installation conforming to requirements of IEEE C2 for Grade B construction of overhead lines in medium loading districts and NFPA 70 for overhead services. Provide material required to make connections into existing system and perform excavating, backfilling,

and other incidental labor. Consider street, alleys, roads and drives "public." Pole configuration shall be as indicated.

3.1.1 Hardware

Provide hardware with washer against wood and with nuts and lock nuts applied wrench tight. Provide locknuts on threaded hardware connections. Locknuts shall be M-F style and not palnut style.

3.1.2 Grounding

Unless otherwise indicated, grounding shall conform to IEEE C2 and NFPA 70. Pole grounding electrodes shall have a resistance to ground not exceeding 25 ohms. When work in addition to that indicated or specified is directed in order to obtain specified ground resistance, provisions of the contract covering changes shall apply.

3.1.2.1 Grounding Electrode Installation

Grounding electrodes shall be installed as follows:

a. Driven rod electrodes - Unless otherwise indicated, ground rods shall be located approximately 3 feetout from base of the pole and shall be driven into the earth until the tops of the rods are approximately 1 foot below finished grade. Multiple rods shall be evenly spaced at least 10 feet apart and connected together 2 feet below grade with a minimum No. 6 bare copper conductor.

3.1.2.2 Grounding Electrode Conductors

Grounding electrode conductors shall be sized as indicated. Secondary system neutral conductors shall be connected directly to the transformer neutral bushings, then connected with a neutral bonding jumper between the transformer neutral bushing and the vertical grounding electrode conductor as indicated. Bends greater than 45 degrees in grounding electrode conductor are not permitted.

3.1.2.3 Grounding Electrode Connections

Make above grade grounding connections on pole lines by exothermic weld or by using a compression connector. Make below grade grounding connections by exothermic weld. Make exothermic welds strictly in accordance with manufacturer's written recommendations. Welds which have puffed up or which show convex surfaces indicating improper cleaning, are not acceptable. No mechanical connectors are required at exothermic weldments. Compression connectors shall be type that uses a hydraulic compression tool to provide correct pressure. Provide tools and dies recommended by compression connector manufacturer. An embossing die code or similar method shall provide visible indication that a connector has been fully compressed on ground wire.

3.1.2.4 Grounding and Grounded Connections

a. Where no primary or common neutral exists, surge arresters and frames of equipment operating at over 750 volts shall be bonded together and connected to a dedicated primary grounding electrode.

b. Where no primary or common neutral exists, transformer secondary neutral bushing, secondary neutral conductor, and frames of equipment

operating at under 750 volts shall be bonded together and connected to a dedicated secondary grounding electrode.

c. When a primary or common neutral exists, connect all grounding and grounded conductors to a common grounding electrode.

3.1.2.5 Protective Molding

Protect grounding conductors which are run on surface of wood poles by PVC molding extending from ground line throughout communication and transformer spaces.

3.1.3 CONDUCTOR INSTALLATION

3.1.3.1 Connectors and Splices

Conductor splices, as installed, shall exceed ultimate rated strength of conductor and shall be of type recommended by conductor manufacturer. No splice shall be permitted within 10 feet of a support. Connectors and splices shall be mechanically and electrically secure under tension and shall be of the nonbolted compression type. The tensile strength of any splice shall be not less than the rated breaking strength of the conductor. Splice materials, sleeves, fittings, and connectors shall be noncorrosive and shall not adversely affect conductors. Aluminum-composition conductors shall be wire brushed and an oxide inhibitor applied before making a compression connection. Connectors which are factory-filled with an inhibitor are acceptable. Inhibitors and compression tools shall be of types recommended by the connector manufacturer. Primary line apparatus taps shall be by means of hot line clamps attached to compression type bail clamps (stirrups). Low-voltage connectors for copper conductors shall be of the solderless pressure type. Noninsulated connectors shall be smoothly taped to provide a waterproof insulation equivalent to the original insulation, when installed on insulated conductors. On overhead connections of aluminum and copper, the aluminum shall be installed above the copper.

3.1.3.2 Aluminum Connections

Make aluminum connections to copper or other material using only splices, connectors, lugs, or fittings designed for that specific purpose. Keep a copy of manufacturer's instructions for applying these fittings at job site for use of the inspector.

3.1.4 Risers

Secure galvanized steel conduits on poles by two hole galvanized steel pipe straps spaced as indicated and within 3 feet of any outlet or termination. Ground metallic conduits.

3.2 FIELD QUALITY CONTROL

3.2.1 General

The Contractor shall notify the Contracting Officer 15 days prior to conducting tests. The Contractor shall furnish materials, labor, and equipment necessary to conduct field tests. The Contractor shall perform tests and inspections recommended by the manufacturer unless specifically waived by the Contracting Officer. The Contractor shall maintain a written record of tests which includes date, test performed, personnel involved,

devices tested, serial number and name of test equipment, and test results. Field reports will be signed and dated by the Contractor.

3.2.2 Safety

The Contractor shall provide and use safety devices such as rubber gloves, protective barriers, and danger signs to protect and warn personnel in the test vicinity. The Contractor shall replace any devices or equipment which are damaged due to improper test procedures or handling.

3.2.3 Performance of Acceptance Checks and Tests

Perform in accordance with the manufacturer's recommendations and include the following visual and mechanical inspections and electrical tests, performed in accordance with NETA ATS.

3.2.3.1 Grounding System

a. Visual and mechanical inspection

Inspect ground system for compliance with contract plans and specifications.

b. Electrical tests

Perform ground-impedance measurements utilizing the fall-of-potential method. On systems consisting of interconnected ground rods, perform tests after interconnections are complete. On systems consisting of a single ground rod perform tests before any wire is connected. Take measurements in normally dry weather, not less than 48 hours after rainfall. Use a portable ground testing megger in accordance with manufacturer's instructions to test each ground or group of grounds. The instrument shall be equipped with a meter reading directly in ohms or fractions thereof to indicate the ground value of the ground rod or grounding systems under test.

3.2.4 Devices Subject to Manual Operation

Each device subject to manual operation shall be operated at least three times, demonstrating satisfactory operation each time.

3.2.5 Follow-Up Verification

Upon completion of acceptance checks and tests, the Contractor shall show by demonstration in service that circuits and devices are in good operating condition and properly performing the intended function. As an exception to requirements stated elsewhere in the contract, the Contracting Officer shall be given 5 working days advance notice of the dates and times of checking and testing.

-- End of Section --

THIS PAGE HAS BEEN INTENTIONALLY LEFT BLANK

TELECOMMUNICATIONS INFRASTRUCTURE STANDARDS
MARINE CORPS BASE CAMP LEJEUNE

SECTION 33 82 00

TELECOMMUNICATIONS OUTSIDE PLANT (OSP)
09/14

PART 1 GENERAL

1.1 REFERENCES

The publications listed below form a part of this specification to the extent referenced. The publications are referred to in the text by the basic designation only.

ASTM INTERNATIONAL (ASTM)

ASTM B1	(2013) Standard Specification for Hard-Drawn Copper Wire
ASTM B8	(2011) Standard Specification for Concentric-Lay-Stranded Copper Conductors, Hard, Medium-Hard, or Soft
ASTM D1557	(2012) Standard Test Methods for Laboratory Compaction Characteristics of Soil Using Modified Effort (56,000 ft-lbf/ft3) (2700 kN-m/m3)
ASTM D709	(2013) Laminated Thermosetting Materials

INSTITUTE OF ELECTRICAL AND ELECTRONICS ENGINEERS (IEEE)

IEEE C2	(2012; Errata 2012; INT 1-4 2012; INT 5-7 2013) National Electrical Safety Code
IEEE 100	(2000; Archived) The Authoritative Dictionary of IEEE Standards Terms

INSULATED CABLE ENGINEERS ASSOCIATION (ICEA)

ICEA S-87-640	(2011) Optical Fiber Outside Plant Communications Cable; 4th Edition
ICEA S-98-688	(2012) Broadband Twisted Pair Telecommunication Cable, Aircore, Polyolefin Insulated, Copper Conductors Technical Requirements
ICEA S-99-689	(2012) Broadband Twisted Pair Telecommunication Cable Filled, Polyolefin Insulated, Copper Conductors Technical Requirements

NATIONAL ELECTRICAL MANUFACTURERS ASSOCIATION (NEMA)

ANSI C62.61	(1993) American National Standard for Gas

	Tube Surge Arresters on Wire Line Telephone Circuits

NATIONAL FIRE PROTECTION ASSOCIATION (NFPA)

NFPA 70	(2014; AMD 1 2013; Errata 1 2013; AMD 2 2013; Errata 2 2013; AMD 3 2014; Errata 3-4 2014; AMD 4-6 2014) National Electrical Code

TELECOMMUNICATIONS INDUSTRY ASSOCIATION (TIA)

TIA-455-107	(1999a) FOTP-107 Determination of Component Reflectance or Link/System Return Loss using a Loss Test Set
TIA-455-46A	(1990) FOTP-46 Spectral Attenuation Measurement for Long-Length, Graded-Index Optical Fibers
TIA-455-78-B	(2002) FOTP-78 Optical Fibres - Part 1-40: Measurement Methods and Test Procedures - Attenuation
TIA-472D000	(2007b) Fiber Optic Communications Cable for Outside Plant Use
TIA-492CAAA	(1998; R 2002) Detail Specification for Class IVa Dispersion-Unshifted Single-Mode Optical Fibers
TIA-492E000	(1996; R 2002) Sectional Specification for Class IVd Nonzero-Dispersion Single-Mode Optical Fibers for the 1550 nm Window
TIA-526-14	(2010b) OFSTP-14A Optical Power Loss Measurements of Installed Multimode Fiber Cable Plant
TIA-526-7	(2002; R 2008) OFSTP-7 Measurement of Optical Power Loss of Installed Single-Mode Fiber Cable Plant
TIA-568-C.1	(2009; Add 2 2011; Add 1 2012) Commercial Building Telecommunications Cabling Standard
TIA-568-C.2	(2009; Errata 2010) Balanced Twisted-Pair Telecommunications Cabling and Components Standards
TIA-568-C.3	(2008; Add 1 2011) Optical Fiber Cabling Components Standard
TIA-569	(2012c; Addendum 1 2013; Errata 2013) Commercial Building Standard for Telecommunications Pathways and Spaces
TIA-590	(1997a) Standard for Physical Location and

	Protection of Below Ground Fiber Optic Cable Plant
TIA-606-B	(2012) Administration Standard for the Telecommunications Infrastructure
TIA-607	(2011b) Generic Telecommunications Bonding and Grounding (Earthing) for Customer Premises
TIA-758	(2012b) Customer-Owned Outside Plant Telecommunications Infrastructure Standard
TIA/EIA-455	(1998b) Standard Test Procedure for Fiber Optic Fibers, Cables, Transducers, Sensors, Connecting and Terminating Devices, and Other Fiber Optic Components
TIA/EIA-455-204	(2000) Standard for Measurement of Bandwidth on Multimode Fiber
TIA/EIA-598	(2005c) Optical Fiber Cable Color Coding

THE SOCIETY FOR PROTECTIVE COATINGS (SSPC)

SSPC SP 6/NACE No.3	(2007) Commercial Blast Cleaning

U.S. DEPARTMENT OF AGRICULTURE (USDA)

RUS 1755	Telecommunications Standards and Specifications for Materials, Equipment and Construction
RUS Bull 1751F-630	(1996) Design of Aerial Plant
RUS Bull 1751F-640	(1995) Design of Buried Plant, Physical Considerations
RUS Bull 1751F-643	(2002) Underground Plant Design
RUS Bull 1751F-815	(1979) Electrical Protection of Outside Plant
RUS Bull 1753F-201	(1997) Acceptance Tests of Telecommunications Plant (PC-4)
RUS Bull 1753F-401	(1995) Splicing Copper and Fiber Optic Cables (PC-2)
RUS Bull 345-50	(1979) Trunk Carrier Systems (PE-60)
RUS Bull 345-65	(1985) Shield Bonding Connectors (PE-65)
RUS Bull 345-72	(1985) Filled Splice Closures (PE-74)
RUS Bull 345-83	(1979; Rev Oct 1982) Gas Tube Surge Arrestors (PE-80)

UNDERWRITERS LABORATORIES (UL)

UL 497	(2001; Reprint Jul 2013) Protectors for Paired Conductor Communication Circuits
UL 510	(2005; Reprint Jul 2013) Polyvinyl Chloride, Polyethylene and Rubber Insulating Tape
UL 83	(2014) Thermoplastic-Insulated Wires and Cables

1.2 RELATED REQUIREMENTS

Section 27 10 00 BUILDING TELECOMMUNICATIONS CABLING SYSTEM, Section 33 71 01 OVERHEAD TRANSMISSION AND DISTRIBUTION, and Section 33 71 02 UNDERGROUND ELECTRICAL DISTRIBUTION apply to this section with additions and modifications specified herein.

1.3 DEFINITIONS

Unless otherwise specified or indicated, electrical and electronics terms used in this specification shall be as defined in TIA-568-C.1, TIA-568-C.2, TIA-568-C.3, TIA-569, TIA-606-B, and IEEE 100 and herein.

1.3.1 Campus Distributor (CD)

A distributor from which the campus backbone cabling emanates. (International expression for main cross-connect - (MC).) On Camp Lejeune the main cross-connect is established in network operation centers, owned by Base Telephone, serving predestinated areas of the base. Designers should not design any new main cross-connects without approval from Base Telephone. The campus backbone is outside plant back to Base Telephone network operations center.

1.3.2 Entrance Facility (EF) (Telecommunications)

An entrance to the building for both private and public network service cables (including antennae) including the entrance point at the building wall and continuing to the entrance room or space.

1.3.3 Entrance Room (ER)

A centralized space for telecommunications equipment that serves the occupants of a building. Equipment housed therein is considered distinct from a telecommunications room because of the nature of its complexity.

1.3.4 Building Distributor (BD)

A distributor in which the building backbone cables terminate and at which connections to the campus backbone cables may be made. (International expression for intermediate cross-connect - (IC).)

1.3.5 Pathway

A physical infrastructure utilized for the placement and routing of telecommunications cable.

1.4 SYSTEM DESCRIPTION

The telecommunications outside plant consists of cable, conduit, manholes, etc. required to provide signal paths from the closest point of presence to the new facility, including free standing frames or backboards, interconnecting hardware, terminating cables, lightning and surge protection modules at the entrance facility. The work consists of providing, testing and making operational cabling, interconnecting hardware and lightning and surge protection necessary to form a complete outside plant telecommunications system for continuous use. The telecommunications contractor must coordinate with Base Telephone concerning layout and configuration of the EF telecommunications and OSP. The telecommunications contractor may be required to coordinate work effort for access to the EF telecommunications and OSP with Base Telephone.

1.5 SUBMITTALS

Government approval is required for submittals with a "G" designation; submittals not having a "G" designation are for Contractor Quality Control approval. The following shall be submitted in accordance with Section 01 33 00 SUBMITTAL PROCEDURES:

a. Submittals shall include the manufacturer's name, trade name, place of manufacture, and catalog model or number. Submittals shall also include applicable federal, military, industry, and technical society publication references. Should manufacturer's data require supplemental information for clarification, the supplemental information shall be submitted as specified in paragraph "Regulatory Requirements" and as required for certificates in Section 01 33 00 SUBMITTAL PROCEDURES.

b. Commercial off-the-shelf manuals shall be provided for operation, installation, configuration, and maintenance of products provided as a part of the telecommunications outside plant (OSP). Submit operations and maintenance data in accordance with Section 01 78 23 OPERATION AND MAINTENANCE DATA and Section 01 78 24.00 20 FACILITY ELECTRONIC OPERATION AND MAINTENANCE SUPPORT INFORMATION (eOMSI), and as specified herein not later than 2 months prior to the date of beneficial occupancy. In addition to requirements of Section 01 78 23 OPERATION AND MAINTENANCE DATA and Section 01 78 24.00 20 FACILITY ELECTRONIC OPERATION AND MAINTENANCE SUPPORT INFORMATION (eOMSI), include the requirements of paragraphs "Telecommunications Outside Plant Shop Drawings" and "Telecommunications Entrance Facility Drawings."

SD-02 Shop Drawings

Telecommunications Outside Plant; G

Telecommunications Entrance Facility Drawings; G

SD-03 Product Data

Wire and cable; G

Cable splices, and connectors; G

Closures; G

Building protector assemblies; G

Protector modules; G

Cross-connect terminal cabinets; G

Spare Parts; G

SD-06 Test Reports

Pre-installation tests; G

Acceptance tests; G

Outside Plant Test Plan; G

SD-07 Certificates

Telecommunications Contractor Qualifications; G

Key Personnel Qualifications; G

Minimum Manufacturer's Qualifications; G

SD-08 Manufacturer's Instructions

Building protector assembly installation; G

Cable tensions; G

Fiber Optic Splices; G

Submit instructions prior to installation.

SD-09 Manufacturer's Field Reports

Factory Reel Test Data; G

SD-10 Operation and Maintenance Data

Telecommunications outside plant (OSP), Data Package 5; G

SD-11 Closeout Submittals

Record Documentation; G

In addition to other requirements, provide in accordance with paragraph "Record Documentation".

1.5.1 Additional Submittal Requirements

All submittals of material, equipment and design must be approved by the Base Telephone Office prior to installing any telecommunications cabling and equipment.

1.6 QUALITY ASSURANCE

1.6.1 Shop Drawings

Include wiring diagrams and installation details of equipment indicating

proposed location, layout and arrangement, control panels, accessories, piping, ductwork, and other items that must be shown to ensure a coordinated installation. Wiring diagrams shall identify circuit terminals and indicate the internal wiring for each item of equipment and the interconnection between each item of equipment. Drawings shall indicate adequate clearance for operation, maintenance, and replacement of operating equipment devices. Submittals shall include the nameplate data, size, and capacity. Submittals shall also include applicable federal, military, industry, and technical society publication references.

1.6.1.1 Telecommunications Outside Plant Shop Drawings

Provide Outside Plant Design in accordance with TIA-758, RUS Bull 1751F-630 for aerial system design, RUS Bull 1751F-643 for underground duct system design and for direct buried system design. Provide T0 shop drawings that show the physical and logical connections from the perspective of an entire campus, such as actual building locations, exterior pathways and campus backbone cabling on plan view drawings, major system nodes, and related connections on the logical system drawings in accordance with TIA-606-B. Drawings shall include wiring and schematic diagrams for fiber optic and copper cabling and splices, copper conductor gauge and pair count, fiber pair count and type, pathway duct and innerduct arrangement, associated construction materials, and any details required to demonstrate that cable system has been coordinated and will properly support the switching and transmission system identified in specification and drawings. Provide Registered Communications Distribution Designer (RCDD) approved drawings of the telecommunications outside plant. Update existing telecommunication Outside Plant T0 drawings to include information modified, deleted or added as a result of this installation in accordance with TIA-606-B. The telecommunications outside plant (OSP) shop drawings shall be included in the operation and maintenance manuals.

1.6.1.2 Telecommunications Entrance Facility Drawings

Provide T3 drawings for EF Telecommunications in accordance with TIA-606-B that include telecommunications entrance facility plan views, pathway layout (cable tray, racks, ladder-racks, etc.), mechanical/electrical layout, and cabinet, rack, backboard, and wall elevations. Drawings shall show layout of applicable equipment including building protector assembly, incoming cable connector blocks, patch panels and equipment spaces, and cabinet/racks. Drawings shall include a complete list of equipment and material, equipment rack details, proposed layout and anchorage of equipment and appurtenances, and equipment relationship to other parts of the work including clearance for maintenance and operation. Drawings may also be an enlargement of a congested area of T1 or T2 drawings. Provide T3 drawings for EF Telecommunications as specified in the paragraph "Telecommunication Space Drawings" of Section 27 10 00 BUILDING TELECOMMUNICATIONS CABLING SYSTEM. The telecommunications entrance facility shop drawings shall be included in the operation and maintenance manuals.

1.6.2 Telecommunications Qualifications

Work under this section shall be performed by and the equipment shall be provided by the approved telecommunications contractor and key personnel. Qualifications shall be provided for: the telecommunications system contractor, the telecommunications system installer, the supervisor (if different from the installer), and the cable splicing and terminating personnel. A minimum of 30 days prior to installation, submit

documentation of the experience of the telecommunications contractor and of the key personnel.

1.6.2.1 Telecommunications Contractor Qualifications

The telecommunications contractor shall be a firm which is regularly and professionally engaged in the business of the applications, installation, and testing of the specified telecommunications systems and equipment. The telecommunications contractor shall demonstrate experience in providing successful telecommunications systems that include outside plant and broadband cabling within the past 3 years. Submit documentation for a minimum of three and a maximum of five successful telecommunication system installations for the telecommunications contractor. Each of the key personnel shall demonstrate experience in providing successful telecommunications systems in accordance with TIA-758 within the past 3 years.

1.6.2.2 Key Personnel Qualifications

Provide key personnel who are regularly and professionally engaged in the business of the application, installation and testing of the specified telecommunications systems and equipment. There may be one key person or more key persons proposed for this solicitation depending upon how many of the key roles each has successfully provided. Each of the key personnel shall demonstrate experience in providing successful telecommunications systems within the past 3 years.

Cable splicing and terminating personnel assigned to the installation of this system or any of its components shall have training in the proper techniques and have a minimum of 3 years experience in splicing and terminating the specified cables. Modular splices shall be performed by factory certified personnel or under direct supervision of factory trained personnel for products used.

Supervisors and installers assigned to the installation of this system or any of its components shall have factory or factory approved certification from each equipment manufacturer indicating that they are qualified to install and test the provided products.

Submit documentation for a minimum of three and a maximum of five successful telecommunication system installations for each of the key personnel. Documentation for each key person shall include at least two successful system installations provided that are equivalent in system size and in construction complexity to the telecommunications system proposed for this solicitation. Include specific experience in installing and testing telecommunications outside plant systems, including broadband cabling, and provide the names and locations of at least two project installations successfully completed using optical fiber and copper telecommunications cabling systems. All of the existing telecommunications system installations offered by the key persons as successful experience shall have been in successful full-time service for at least 18 months prior to the issuance date for this solicitation. Provide the name and role of the key person, the title, location, and completed installation date of the referenced project, the referenced project owner point of contact information including name, organization, title, and telephone number, and generally, the referenced project description including system size and construction complexity.

Indicate that all key persons are currently employed by the

telecommunications contractor, or have a commitment to the telecommunications contractor to work on this project. All key persons shall be employed by the telecommunications contractor at the date of issuance of this solicitation, or if not, have a commitment to the telecommunications contractor to work on this project by the date that the bid was due to the Contracting Officer.

Note that only the key personnel approved by the Contracting Officer in the successful proposal shall do work on this solicitation's telecommunications system. Key personnel shall function in the same roles in this contract, as they functioned in the offered successful experience. Any substitutions for the telecommunications contractor's key personnel requires approval from the Contracting Officer.

1.6.2.3 Minimum Manufacturer's Qualifications

Cabling, equipment and hardware manufacturers shall have a minimum of 3 years experience in the manufacturing, assembly, and factory testing of components which comply with, TIA-568-C.1, TIA-568-C.2 and TIA-568-C.3. In addition, cabling manufacturers shall have a minimum of 3 years experience in the manufacturing and factory testing of cabling which comply with ICEA S-87-640, ICEA S-98-688, and ICEA S-99-689.

1.6.3 Outside Plant Test Plan

Prepare and provide a complete and detailed test plan for field tests of the outside plant including a complete list of test equipment for the copper conductor and optical fiber cables, components, and accessories for approval by Base Telephone via the Contracting Officer. Include a cut-over plan with procedures and schedules for relocation of facility station numbers without interrupting service to any active location. Submit the plan at least 30 days prior to tests for Contracting Officer approval. Provide outside plant testing and performance measurement criteria in accordance with TIA-568-C.1 and RUS Bull 1753F-201. Include procedures for certification, validation, and testing that includes fiber optic link performance criteria.

1.6.4 Standard Products

Provide materials and equipment that are standard products of manufacturers regularly engaged in the production of such products which are of equal material, design and workmanship and shall be the manufacturer's latest standard design that has been in satisfactory commercial or industrial use for at least two years prior to bid opening. The two year period shall include applications of equipment and materials under similar circumstances and of similar size. The product shall have been on sale on the commercial market through advertisements, manufacturer's catalogs, or brochures during the two year period. Products supplied shall be specifically designed and manufactured for use with outside plant telecommunications systems. Where two or more items of the same class of equipment are required, these items shall be products of a single manufacturer; however, the component parts of the item need not be the products of the same manufacturer unless stated in this section. Product submission must be approved for use prior to install by Base Telephone via the Contracting Officer.

1.6.4.1 Alternative Qualifications

Products having less than a two-year field service record will be acceptable if a certified record of satisfactory field operation for not

less than 6000 hours, exclusive of the manufacturer's factory or laboratory tests, is provided.

1.6.4.2 Material and Equipment Manufacturing Date

Products manufactured more than 3 years prior to date of delivery to site shall not be used, unless specified otherwise.

1.6.5 Regulatory Requirements

In each of the publications referred to herein, consider the advisory provisions to be mandatory, as though the word, "shall" had been substituted for "should" wherever it appears. Interpret references in these publications to the "authority having jurisdiction," or words of similar meaning, to mean Base Telephone via the Contracting Officer. Equipment, materials, installation, and workmanship shall be in accordance with the mandatory and advisory provisions of NFPA 70 unless more stringent requirements are specified or indicated.

1.6.5.1 Independent Testing Organization Certificate

In lieu of the label or listing, submit a certificate from an independent testing organization, competent to perform testing, and approved by the Contracting Officer. The certificate shall state that the item has been tested in accordance with the specified organization's test methods and that the item complies with the specified organization's reference standard.

1.7 DELIVERY, STORAGE, AND HANDLING

Ship cable on reels in 5000 foot lengths for 25, 50 or 100 pair configuration and 1250 feet length for larger cables. Radius of the reel drum shall not be smaller than the minimum bend radius of the cable. Wind cable on the reel so that unwinding can be done without kinking the cable. Two meters of cable at both ends of the cable shall be accessible for testing. Attach permanent label on each reel showing length, cable identification number, cable size, cable type, and date of manufacture. Provide water resistant label and the indelible writing on the labels. Apply end seals to each end of the cables to prevent moisture from entering the cable. Reels with cable shall be suitable for outside storage conditions when temperature ranges from minus 40 degrees C to plus 65 degrees C, with relative humidity from 0 to 100 percent. Equipment, other than cable, delivered and placed in storage shall be stored with protection from weather, humidity and temperature variation, dirt and dust, or other contaminants in accordance with manufacturer's requirements.

1.8 MAINTENANCE

1.8.1 Record Documentation

Provide the activity responsible for telecommunications system maintenance and administration (Base Telephone via the Contracting Officer) a single complete and accurate set of record documentation for the entire telecommunications system with respect to this project.

Provide record documentation as specified in Section 27 10 00 BUILDING TELECOMMUNICATIONS CABLING SYSTEM.

Provide T5 drawings including documentation on cables and termination hardware in accordance with TIA-606-B. T5 drawings shall include schedules

to show information for cut-over and cable plant management, patch panel layouts, cross-connect information and connecting terminal layout as a minimum. T5 drawings shall be provided in both hard copy format and on electronic media using Windows based computer cable management software. A licensed copy of the cable management software including documentation shall be provided. Update existing record documentation to reflect campus distribution T0 drawings and T3 drawing schedule information modified, deleted or added as a result of this installation. Provide the following T5 drawing documentation as a minimum:

a. Cables - A record of installed cable shall be provided in accordance with TIA-606-B. The cable records shall include only the required data fields on the hard copy and the required data fields for each cable and complete end-to-end circuit report for each complete circuit from the assigned outlet to the entry facility for the soft copy in accordance with TIA-606-B. Include manufacture date of cable with submittal.

b. Termination Hardware - Provide a record of installed patch panels, cross-connect points, campus distributor and terminating block arrangements and type in accordance with TIA-606-B. Documentation shall include the required data fields in accordance with TIA-606-B.

1.8.2 Spare Parts

In addition to the requirements of Section 01 78 23 OPERATION AND MAINTENANCE DATA and Section 01 78 24.00 20 FACILITY ELECTRONIC OPERATION AND MAINTENANCE SUPPORT INFORMATION (eOMSI), provide a complete list of parts and supplies, with current unit prices and source of supply, and a list of spare parts recommended for stocking. Spare parts shall be provided no later than the start of field testing.

1.9 WARRANTY

The equipment items shall be supported by service organizations which are reasonably convenient to the equipment installation in order to render satisfactory service to the equipment on a regular and emergency basis during the warranty period of the contract.

PART 2 PRODUCTS

2.1 MATERIALS AND EQUIPMENT

Products supplied shall be specifically designed and manufactured for use with outside plant telecommunications systems. All product data must be supplied in the submittal process and no product can be used without approval from Base Telephone via the Contracting Officer.

2.2 TELECOMMUNICATIONS ENTRANCE FACILITY

2.2.1 Building Protector Assemblies

Building protector assembly shall be self-contained and have interconnecting hardware (710 input and 66 output) for connection to exterior cabling at full capacity. Provide manufacturers instructions for building protector assembly installation. Provide copper cable interconnecting hardware as specified in Section 27 10 00 BUILDING TELECOMMUNICATIONS CABLING SYSTEM. There will be no service loops or splicing of copper cable outside of the building protector assembly.

2.2.2 Protector Modules

Provide in accordance with UL 497 three-electrode gas tube or solid state type, 5 pin rated for the application. Provide gas tube protection modules in accordance with RUS Bull 345-83 and shall be heavy duty, A>10kA, B>400, C>65A, where A is the maximum single impulse discharge current, B is the impulse life and C is the AC discharge current in accordance with ANSI C62.61. The gas modules shall shunt high voltage to ground, fail short, and be equipped with an external spark gap and heat coils in accordance with UL 497. Provide the number of surge protection modules equal to the number of pairs of exterior cable of the building protector assembly.

2.2.3 Fiber Optic Terminations

Provide fiber optic cable terminations as specified in Section 27 10 00 BUILDING TELECOMMUNICATIONS CABLING SYSTEM.

2.2.4 Pathways

Underground applications for single buildings: provide a minimum of three (3) four inch ducts, one of which contains (2)- three cell fabric or (4)-1" HDDPE inner ducts. The underground ducts must have 3" concrete encasing (orange in color), 24 inches below grade minimum from the Telecommunications Entrance Facility to the maintenance hole that will be providing service to the building (Demarcation point). For campus distribution between maintenance holes ducts may need to be 5" or 6" to support larger cables. Also there will be no less than 4 and up to 50 ducts as needed for distribution to the area serviced. All new ducts will be plugged at both ends with a backing and a thin layer of hydraulic cement and visibly marked or provided on area map with GPS coordinates.

For direct buried applications, provide a minimum of three (3) four inch ducts from the Telecommunications Entrance Facility to outside the building footprint past any obstructions, footers, or sidewalks by at least 5 feet into clear soil / entryway, 24 inches below grade. The ducts will be plugged at both ends and clearly marked on outside end. For distribution to demarcation, between handholes, and riser points, cables need to be 36" below grade with metal locating tape at 24" below grade. Cables need to be in HDDPE direct bored, concrete encased in conduit, or concrete encased split duct under all roadways and pavement. All new cables need to be provided on area map with GPS coordinates for riser points or handholes.

Handholes and maintenance holes shall be traffic rated (MIN tier 22). Handhole size min 4'x4'x4'. Maintenance hole size min 6'x7'x8' and all penetrations should be splayed.

2.3 CLOSURES

2.3.1 Copper Conductor Closures

2.3.1.1 Aerial Cable Closures (Off-Base)

Provide cable closure assembly consisting of a frame with clamps, a lift-off polyethylene cover, cable nozzles, and drop wire rings. Closure shall be suitable for use on Figure 8 cables. Closures shall be free breathing and suitable for housing either straight-through type or the branch type splices of non-pressurized communications cables and shall be sized as indicated. The closure shall be constructed with ultraviolet

resistant PVC.

NOTE: The installation of aerial telecommunications cabling aboard Marine Corps Base, Camp Lejeune and Marine Corps Air Station, New River is not authorized.

2.3.1.2 Underground Cable Closures

a. Aboveground. Provide aboveground closures constructed of not less than 14 gauge steel and acceptable pole or stake mounting in accordance with RUS 1755.910. Closures shall be sized and contain a marker as indicated. Covers shall be secured to prevent unauthorized entry. PVC type closures are to be used in beach areas. All pedestals shall contain a minimum 4 foot x 3/8 inch pigtailed ground rod.

b. Direct burial. Provide buried closure suitable for enclosing a straight, butt, and branch splice in a container into which can be poured an encapsulating compound. Closure shall have adequate strength to protect the splice and maintain cable shield electrical continuity in the buried environment. Encapsulating compound shall be re-enterable and shall not alter the chemical stability of the closure. Provide filled splice cases in accordance with RUS Bull 345-72.

c. In vault or manhole. Provide underground closure suitable to house a straight, butt, and branch splice in a protective housing into which air can be pumped for flash testing. Closure shall be of suitable thermoplastic, thermoset, or stainless steel material supplying structural strength necessary to pass the mechanical and electrical requirements in a vault or manhole environment. Heat shrinkable type closures should not be used in vault or manhole. Provide splice cases in accordance with RUS Bull 345-72.

2.3.2 Fiber Optic Closures

2.3.2.1 Aerial (Off-Base)

Provide aerial closure that is free breathing and suitable for housing splice organizer of non-pressurized cables. Closure shall be constructed from heavy PVC with ultraviolet resistance.

NOTE: The installation of aerial telecommunications cabling aboard Marine Corps Base, Camp Lejeune and Marine Corps Air Station, New River is not authorized.

2.3.2.2 Direct Burial

Provide buried closure suitable to house splice organizer in protective housing into which can be poured an encapsulating compound. Closure shall have adequate strength to protect the splice and maintain cable shield electrical continuity, when metallic, in buried environment. Encapsulating compound shall be reenterable and shall not alter chemical stability of the closure.

2.3.2.3 Vaults or Manholes

Provide underground closure suitable to house splice organizer in a protective housing into which air can be pumped for flash testing. Closure shall be of thermoplastic, thermoset, or stainless steel material supplying structural strength necessary to pass the mechanical and electrical

requirements in a vault or manhole environment. Provide 60' slack coils on fiber in every 3rd manhole / handhole or in any which a turn is made.

2.4 PAD MOUNTED CROSS-CONNECT TERMINAL CABINETS

Provide in accordance with RUS 1755.910 and the following:

a. Constructed of 14 gauge steel.

b. Equipped with a double set of hinged doors with closed-cell foam weatherstripping. Doors shall be locked and contain a marker as indicated.

c. Equipped with spool spindle bracket, mounting frames, binding post log, jumpering instruction label, and load coil mounting provisions.

d. Complete with cross connect modules to terminate number of pairs as indicated.

e. Sized as indicated.

2.5 CABLE SPLICES, AND CONNECTORS

2.5.1 Copper Cable Splices

In vaults or manholes provide multi-pair, in-line fold back or single pair, in-line splices of a moisture resistant, three-wire insulation displacement connector held rigidly in place to assure maximum continuity in accordance with RUS Bull 1753F-401. Cables greater than 25 pairs shall be spliced using multi-pair splicing connectors, which accommodate 25 pairs of conductors at a time. Provide correct connector size to accommodate the cable gauge of the supplied cable. Provide enough cable slack suitable for splicing operations, but in no case less than 10 feet. In above ground splices use three wire insulation displacement single pair connectors no matter what size the cable.

2.5.2 Copper Cable Splice Connector

Provide splice connectors with a polycarbonate body and cap and a tin-plated brass contact element. Connector shall accommodate 19 to 26 AWG solid wire with a maximum insulation diameter of 0.065 inch. Fill connector with sealant grease to make a moisture resistant connection, in accordance with RUS Bull 1753F-401.

2.5.3 Fiber Optic Cable Splices

Provide fiber optic cable splices and splicing materials for fusion methods at locations shown on the construction drawings. The splice insertion loss shall be 0.3 dB maximum when measured in accordance with TIA-455-78-B using an Optical Time Domain Reflectometer (OTDR). Splices shall be designed for a return loss of 0.3 db max for single mode fiber when tested in accordance with TIA-455-107. Physically protect each fiber optic splice by a splice kit specially designed for the splice. Provide enough cable slack suitable for splicing operations, but in no case less than 30 feet.

2.5.4 Fiber Optic Splice Organizer

Provide splice organizer suitable for housing fiber optic splices in a neat and orderly fashion. Splice organizer shall allow for a minimum of 1 m (3

feet) of fiber for each fiber within the cable to be neatly stored without kinks or twists. Splice organizer shall accommodate individual strain relief for each splice and allow for future maintenance or modification, without damage to the cable or splices. Provide splice organizer hardware, such as splice trays, protective glass shelves, and shield bond connectors in a splice organizer kit. All fiber optic cable shall be installed according to Manufacturer's product Standard Recommended Procedure (SRP).

2.5.5 Shield Connectors

Provide connectors with a stable, low-impedance electrical connection between the cable shield and the bonding conductor in accordance with RUS Bull 345-65.

2.6 CONDUIT

Provide conduit as specified in Section 33 71 02 UNDERGROUND ELECTRICAL DISTRIBUTION.

2.7 PLASTIC INSULATING TAPE

UL 510.

2.8 WIRE AND CABLE

2.8.1 Copper Conductor Cable

Solid copper conductors, covered with an extruded solid insulating compound. Insulated conductors shall be twisted into pairs which are then stranded or oscillated to form a cylindrical core. For special high frequency applications, the cable core shall be separated into compartments. Cable shall be completed by the application of a suitable core wrapping material, a corrugated copper or plastic coated aluminum shield, and an overall extruded jacket. Telecommunications contractor shall verify distances between splice points, slack required, and pair count required prior to ordering cable. Gauge of conductor shall be determined by the distance from the central office. In all cases the installed cable shall be of the same gauge as the cable it is being spliced into at the Demarcation point. The cable range available is; numbers of pairs specified; 19 gauge (6 to 400 pairs), 22 gauge (6 to 1200 pairs), 24 gauge (6 to 2100 pairs), and 26 gauge (6 to 3000 pairs). **26 AWG is not used on Camp Lejeune.** Copper conductors shall conform to the following: All copper conductor cable from 6 to 1200 pair shall be PE-39 type, 1201-2400 pair shall be PE-89.

2.8.1.1 Underground

Provide filled cable (type PE-39/89) meeting the requirements of ICEA S-99-689 and RUS 1755.390. Provide enough cable slack suitable for splicing operations, but in no case less than 10 feet.

2.8.1.2 Aerial (Off-Base)

Provide filled cable meeting the requirements of ICEA S-99-689, ICEA S-98-688, and RUS 1755.390 except that it shall be suitable for aerial installation and shall be Figure 8 distribution wire with 26,700 N (6,000 pound) Class A galvanized steel or 26,700 N (6,000 pound) aluminum-clad steel strand.

NOTE: The installation of aerial telecommunications cabling aboard Marine Corps Base, Camp Lejeune and Marine Corps Air Station, New River is not authorized.

2.8.1.3 Screen

Provide screen-compartmental core cable filled cable meeting the requirements of ICEA S-99-689 and RUS 1755.390.

2.8.2 Fiber Optic Cable

Provide single-mode, 8/125-um, 0.10 aperture 1310 & 1550 nm fiber optic cable in accordance with TIA-492CAAA, TIA-492E000, TIA-472D000, and ICEA S-87-640 including any special requirements made necessary by a specialized design. Provide min 24 optical fibers or as indicated by drawings. Fiber optic cable shall be specifically designed for outside use with preferred double jacket (if buried), single armor, loose tube buffer construction, corning glass, and must be shielded. Provide fiber optic color code in accordance with TIA/EIA-598. Provide min 60' slack coil in every 3rd manhole or any one where a turn is made.

2.8.2.1 Strength Members

Provide central/non-central, and non-metallic/metallic strength members with sufficient tensile strength for installation and residual rated loads to meet the applicable performance requirements in accordance with ICEA S-87-640. The strength member is included to serve as a cable core foundation to reduce strain on the fibers, and shall not serve as a pulling strength member.

2.8.2.2 Shielding or Other Metallic Covering

Provide bare aluminum or coated aluminum single tape covering and shield in accordance with ICEA S-87-640 on all cables.

2.8.2.3 Performance Requirements

Provide fiber optic cable with optical and mechanical performance requirements in accordance with ICEA S-87-640.

2.8.3 Grounding and Bonding Conductors

Provide grounding and bonding conductors in accordance with RUS 1755.200, TIA-607, IEEE C2, and NFPA 70. Solid bare copper wire meeting the requirements of ASTM B1 for sizes No. 8 AWG and smaller and stranded bare copper wire meeting the requirements of ASTM B8, for sizes No. 6 AWG and larger. Insulated conductors shall have 600-volt, Type TW insulation meeting the requirements of UL 83.

2.9 T-SPAN LINE TREATMENT REPEATERS

Provide as indicated. Repeaters shall be pedestal mounted with pressurized housings, sized as indicated and shall meet the requirements of RUS Bull 345-50.

2.10 POLES AND HARDWARE (OFF-BASE)

Provide poles and hardware as specified in Section 33 71 01 OVERHEAD TRANSMISSION AND DISTRIBUTION.

NOTE: The installation of aerial telecommunications cabling aboard Marine Corps Base, Camp Lejeune and Marine Corps Air Station, New River is not authorized.

2.11 CABLE TAGS IN MANHOLES, HANDHOLES, AND VAULTS

Provide tags for each telecommunications cable or wire located in manholes, handholes, and vaults. Cable tags shall be stainless steel or polyethylene and labeled in accordance with TIA-606-B. Handwritten labeling is unacceptable.

2.11.1 Stainless Steel

Provide stainless steel, cable tags 41.25 mm (1 5/8 inches) in diameter 1.58 mm (1/16 inch) thick minimum, and circular in shape. Tags shall be die stamped with numbers, letters, and symbols not less than 6.35 mm (0.25 inch) high and approximately 0.38 mm (0.015 inch) deep in normal block style.

2.11.2 Polyethylene Cable Tags

Provide tags of polyethylene that have an average tensile strength of 22.4 MPa (3250 pounds per square inch); and that are two millimeter (0.08 inch) thick minimum, non-corrosive non-conductive; resistive to acids, alkalis, organic solvents, and salt water; and distortion resistant to 77 degrees C (170 degrees F). Provide 1.3 mm (0.05 inch) minimum thick black polyethylene tag holder. Provide a one-piece nylon, self-locking tie at each end of the cable tag. Ties shall have a minimum loop tensile strength of 778.75 N (175 pounds). The cable tags shall have black block letters, numbers, and symbols 25 mm (one inch) high on a yellow background. Letters, numbers, and symbols shall not fall off or change positions regardless of cable tag orientation.

2.12 BURIED WARNING AND IDENTIFICATION TAPE

Provide metallic fiber optic media marking and protection in accordance with TIA-590. Provide color, type and depth of tape as specified in paragraph "Buried Warning and Identification Tape" in Section 31 23 00.00 20 EXCAVATION AND FILL.

2.13 GROUNDING BRAID

Provide grounding braid that provides low electrical impedance connections for dependable shield bonding in accordance with RUS 1755.200. Braid shall be made from flat tin-plated copper.

2.14 MANUFACTURER'S NAMEPLATE

Each item of equipment shall have a nameplate bearing the manufacturer's name, address, model number, and serial number securely affixed in a conspicuous place; the nameplate of the distributing agent will not be acceptable.

2.15 FIELD FABRICATED NAMEPLATES

Provide laminated plastic nameplates in accordance with ASTM D709 for each patch panel, protector assembly, rack, cabinet and other equipment or as indicated on the drawings. Each nameplate inscription shall identify the

function and, when applicable, the position. Nameplates shall be melamine plastic, 3 mm (0.125 inch) thick, white with black center core. Surface shall be matte finish. Corners shall be square. Accurately align lettering and engrave into the core. Minimum size of nameplates shall be 25 by 65 mm (one by 2.5 inches). Lettering shall be a minimum of 6.35 mm (0.25 inch) high, and of normal block style.

2.16 TESTS, INSPECTIONS, AND VERIFICATIONS

2.16.1 Factory Reel Test Data

Test 100 percent OTDR test of FO media at the factory in accordance with TIA-568-C.1 and TIA-568-C.3. Use TIA-526-7 for single mode fiber and TIA-526-14 Method B for multi mode fiber measurements. Calibrate OTDR to show anomalies of 0.2 dB minimum. Enhanced performance filled OSP copper cables, referred to as Broadband Outside Plant (BBOSP), shall meet the requirements of ICEA S-99-689. Enhanced performance air core OSP copper cables shall meet the requirements of ICEA S-98-688. Submit test reports, including manufacture date for each cable reel and receive approval before delivery of cable to the project site.

PART 3 EXECUTION

3.1 INSTALLATION

Install all system components and appurtenances in accordance with manufacturer's instructions IEEE C2, NFPA 70, and as indicated. Provide all necessary interconnections, services, and adjustments required for a complete and operable telecommunications system.

3.1.1 Contractor Damage

Promptly repair indicated utility lines or systems damaged during site preparation and construction. Damages to lines or systems not indicated, which are caused by Contractor operations, shall be treated as "Changes" under the terms of the Contract Clauses. When Contractor is advised in writing of the location of a nonindicated line or system, such notice shall provide that portion of the line or system with "indicated" status in determining liability for damages. In every event, immediately notify Base Telephone via the Contracting Officer of damage.

3.1.2 Cable Inspection and Repair

Handle cable and wire provided in the construction of this project with care. Inspect cable reels for cuts, nicks or other damage. Damaged cable shall be replaced or repaired to the satisfaction of the Contracting Officer. Reel wraps shall remain intact on the reel until the cable is ready for placement.

3.1.3 Direct Burial System

Installation shall be in accordance with RUS Bull 1751F-640. Under railroad tracks, paved areas, and roadways install cable in conduit encased in concrete. Slope ducts to drain. Excavate trenches by hand or mechanical trenching equipment after proper locates and pothole methods are used. Provide a minimum cable cover of 915mm (36 inches) below finished grade for both fiber and copper cable. Trenches shall be not less than 155 mm (6 inches) wide and in straight lines between cable markers. Do not use cable plows. Bends in trenches shall have a radius of not less than 915 mm

(36 inches). Where two or more cables are laid parallel in the same trench, space laterally at least 78 mm (3 inches) apart. When rock is encountered, remove it to a depth of at least 78 mm (3 inches) below the cable and fill the space with sand or clean earth, free from particles larger than 6 mm (1/4 inch). Do not unreel and pull cables into the trench from one end. Cable may be unreeled on grade and lifted into position. Provide color, type and depth of metallic warning tape as specified in paragraph "Buried Warning and Identification Tape" in Section 31 23 00.00 20 EXCAVATION AND FILL. Fiber optic cable shall not be direct buried, it shall be installed in a smooth wall HDPE type duct.

3.1.3.1 Cable Placement

a. Prior to design and installation of any copper or optical fiber cable systems, cable routes and pathways must be approved by Base Telephone via the Contracting Officer. Manhole layouts (butterflies) should be provided for review and approval.

b. Separate cables crossing other cables or metal piping from the other cables or pipe by not less than 78 mm (3 inches) of well tamped earth. Do not install circuits for communications under or above traffic signal loops.

c. Cables shall be in one piece without splices between connections except where the distance exceeds the lengths in which the cable is furnished.

d. Avoid bends in cables of small radii and twists that might cause damage. Do not bend cable and wire in a radius less than 10 times the outside diameter of the cable or wire.

e. Leave a horizontal slack of approximately 3048 mm (10 feet) for copper in the ground on each end of cable runs, on each side of connection boxes, and at points where connections are brought aboveground. Where cable is brought above ground, leave additional slack to make necessary connections. For fiber provide a min of 30 feet on each end.

3.1.3.2 Identification Markers

Provide a marker at each change of direction of the cable, over the ends of ducts or conduits which are installed under paved areas and roadways and over each splice. Identification markers shall be of concrete, approximately 20 inches square by 6 inches thick.

3.1.3.3 Backfill for Rocky Soil

When placing cable in a trench in rocky soil, the cable shall be cushioned by a fill of sand or selected soil at least 2 inches thick on the floor of the trench before placing the cable or wire. The backfill for at least 4 inches above the wire or cable shall be free from stones, rocks, or other hard or sharp materials which might damage the cable or wire. If the buried cable is placed less than 24 inches in depth, a protective cover of concrete shall be used.

3.1.4 Cable Protection

Provide direct burial cable protection in accordance with NFPA 70 and as specified in Section 33 71 02 UNDERGROUND ELECTRICAL DISTRIBUTION. Galvanized conduits which penetrate concrete (slabs, pavement, and walls) shall be PVC coated and shall extend from the first coupling or fitting

outside either side of the concrete minimum of 155 mm per 305 mm (6 inches per 12 inches) burial depth beyond the edge of the surface where cable protection is required; all conduits shall be sealed on each end. Where additional protection is required, cable may be placed in galvanized iron pipe (GIP) sized on a maximum fill of 40 percent of cross-sectional area, or in concrete encased 103 mm (4 inches) PVC pipe. Conduit may be installed by jacking or trenching. Trenches shall be backfilled with earth and mechanically tamped at 155 mm (6 inches) lift so that the earth is restored to the same density, grade and vegetation as adjacent undisturbed material.

3.1.4.1 Cable End Caps

Cable ends shall be sealed at all times with coated heat shrinkable end caps. Cables ends shall be sealed when the cable is delivered to the job site, while the cable is stored and during installation of the cable. The caps shall remain in place until the cable is spliced or terminated. Sealing compounds and tape are not acceptable substitutes for heat shrinkable end caps. Cable which is not sealed in the specified manner at all times will be rejected.

3.1.5 Underground Duct

Provide underground duct and connections to existing manholes, handholes, concrete pads, or existing ducts as specified in Section 33 71 02 UNDERGROUND ELECTRICAL DISTRIBUTION with any additional requirements as specified herein. Minimum size of ducts shall be 103mm (4 inch) and minimum number will be three (3).

3.1.6 Reconditioning of Surfaces

Provide reconditioning of surfaces as specified in Section 33 71 02 UNDERGROUND ELECTRICAL DISTRIBUTION.

3.1.7 Penetrations

Caulk and seal cable access penetrations in walls, ceilings and other parts of the building. Seal openings around electrical penetrations through fire resistance-rated wall, partitions, floors, or ceilings in accordance with Section 07 84 00 FIRESTOPPING.

3.1.8 Cable Pulling

Test duct lines with a mandrel and swab out to remove foreign material before the pulling of cables. Avoid damage to cables in setting up pulling apparatus or in placing tools or hardware. Do not step on cables when entering or leaving the manhole. Do not place cables in ducts other than those shown without prior written approval of Base Telephone via the Contracting Officer. Roll cable reels in the direction indicated by the arrows painted on the reel flanges. Set up cable reels on the same side of the manhole as the conduit section in which the cable is to be placed. Level the reel and bring into proper alignment with the conduit section so that the cable pays off from the top of the reel in a long smooth bend into the duct without twisting. Under no circumstances shall the cable be paid off from the bottom of a reel. Check the equipment set up prior to beginning the cable pulling to avoid an interruption once pulling has started. Use a cable feeder guide of suitable dimensions between cable reel and face of duct to protect cable and guide cable into the duct as it is paid off the reel. As cable is paid off the reel, lubricate and inspect

cable for sheath defects. When defects are noticed, stop pulling operations and notify the Contracting Officer to determine required corrective action. Cable pulling shall also be stopped when reel binds or does not pay off freely. Rectify cause of binding before resuming pulling operations. Provide cable lubricants recommended by the cable manufacturer. Avoid bends in cables of small radii and twists that might cause damage. Do not bend cable and wire in a radius less than 10 times the outside diameter of the cable or wire.

3.1.8.1 Cable Tensions

Obtain from the cable manufacturer and provide to the Contracting Officer, the maximum allowable pulling tension. This tension shall not be exceeded.

3.1.8.2 Pulling Eyes

Equip cables 1.25 inches in diameter and larger with cable manufacturer's factory installed pulling-in eyes. Provide cables with diameter smaller than 1.25 inches with heat shrinkable type end caps or seals on cable ends when using cable pulling grips. Rings to prevent grip from slipping shall not be beaten into the cable sheath. Use a swivel of 3/4 inch links between pulling-in eyes or grips and pulling strand.

3.1.8.3 Installation of Cables in Manholes, Handholes, and Vaults

Do not install cables utilizing the shortest route, but route along those walls providing the longest route and the maximum spare cable lengths. Do not install slack coils in copper unless approved or requested by the AHJ. Fiber slack coils should be min 60 feet in every 3rd manhole or any manhole where a turn is made. Form cables to closely parallel walls, not to interfere with duct entrances, and support cables on brackets and cable insulators at a maximum of 4 feet. Install cable or cables in corresponding ducts entering and exiting the manholes in straight lines, do not cross ducts or manhole. In manholes, handholes, and vaults where new ducts are to be terminated, or where new cables are to be installed, modify the existing installation of cables, cable supports, and grounding as required with cables arranged and supported as specified for new cables. Identify each cable with corrosion-resistant embossed metal tags. All fiber optic cables will be installed in an innerduct measuring min 1 inch in diameter or in a fabric innerduct with three - three inch cells.

3.1.9 Aerial Cable Installation (Off-Base)

Pole installation shall be as specified in Section 33 71 01 OVERHEAD TRANSMISSION AND DISTRIBUTION. Where physical obstructions make it necessary to pull distribution wire along the line from a stationary reel, use cable stringing blocks to support wire during placing and tensioning operations. Do not place ladders, cable coils, and other equipment on or against the distribution wire. Wire shall be sagged in accordance with the data shown. Protect cable installed outside of building less than 8 feet above finished grade against physical damage.

NOTE: The installation of aerial telecommunications cabling aboard Marine Corps Base, Camp Lejeune and Marine Corps Air Station, New River is not authorized.

3.1.9.1 Figure 8 Distribution Wire

Perform spiraling of the wire within 24 hours of the tensioning operation.

Perform spiraling operations at alternate poles with the approximate length of the spiral being 4575 mm (15 feet). Do not remove insulation from support members except at bonding and grounding points and at points where ends of support members are terminated in splicing and dead-end devices. Ground support wire at poles to the pole ground.

3.1.9.2 Suspension Strand

Place suspension strand as indicated. Tension in accordance with the data indicated. When tensioning strand, loosen cable suspension clamps enough to allow free movement of the strand. Place suspension strand on the road side of the pole line. In tangent construction, point the lip of the suspension strand clamp toward the pole. At angles in the line, point the suspension strand clamp lip away from the load. In level construction place the suspension strand clamp in such a manner that it will hold the strand below the through-bolt. At points where there is an up-pull on the strand, place clamp so that it will support strand above the through-bolt. Make suspension strand electrically continuous throughout its entire length, bond to other bare cables suspension strands and connect to pole ground at each pole.

3.1.9.3 Aerial Cable (Off-Base)

Keep cable ends sealed at all times using cable end caps. Take cable from reel only as it is placed. During placing operations, do not bend cables in a radius less than 10 times the outside diameter of cable. Place temporary supports sufficiently close together and properly tension the cable where necessary to prevent excessive bending. In those instances where spiraling of cabling is involved, accomplish mounting of enclosures for purposes of loading, splicing, and distribution after the spiraling operation has been completed.

NOTE: The installation of aerial telecommunications cabling aboard Marine Corps Base, Camp Lejeune and Marine Corps Air Station, New River is not authorized.

3.1.10 Cable Splicing

3.1.10.1 Copper Conductor Splices

Perform splicing in accordance with requirements of RUS Bull 1753F-401 except that direct buried splices and twisted and soldered splices are not allowed. Exception does not apply for pairs assigned for carrier application.

3.1.10.2 Fiber Optic Splices

Fiber optic splicing shall be in accordance with manufacturer's recommendation and shall exhibit an insertion loss not greater than 0.3 dB for fusion splices.

3.1.11 Surge Protection

All cables and conductors, except fiber optic cable, which serve as communication lines through off-premise lines, shall have surge protection installed at each end which meet the requirements of RUS Bull 1751F-815.

3.1.12 Grounding

Provide grounding and bonding in accordance with RUS 1755.200, TIA-607, IEEE C2, and NFPA 70. Ground exposed noncurrent carrying metallic parts of telephone equipment, cable sheaths, cable splices, and terminals.

3.1.12.1 Telecommunications Master Ground Bar (TMGB)

The TMGB is the hub of the basic telecommunications grounding system providing a common point of connection for ground from outside cable, CD, and equipment. Establish a TMGB for connection point for cable stub shields to connector blocks and CD protector assemblies as specified in Section 26 20 00 INTERIOR DISTRIBUTION SYSTEM. The TMGB will at a minimum be 4 inches by 10 inches by 1/4 inch.

3.1.12.2 Incoming Cable Shields

Shields shall not be bonded across the splice to the cable stubs at the main distribution frame. Ground shields of incoming cables in the EF Telecommunications to the TMGB.

3.1.12.3 Campus Distributor Grounding

a. Protection assemblies: Mount CD protector assemblies directly on the telecommunications backboard. Connect assemblies mounted on each vertical frame with number 6 AWG copper conductor to provide a low resistance path to TMGB.

b. TMGB connection: Connect TMGB to TGB with copper conductor with a total resistance of less than 0.01 ohms.

3.1.13 Cut-Over

All necessary transfers and cut-overs, shall be accomplished by the telecommunications contractor.

3.2 LABELING

3.2.1 Labels

Provide labeling for new cabling and termination hardware located within the facility in accordance with TIA-606-B. Handwritten labeling is unacceptable. Stenciled lettering for cable and termination hardware shall be provided using either thermal ink transfer process or laser printer.

3.2.2 Cable Tag Installation

Install cable tags for each telecommunications cable or wire located in manholes, handholes, and vaults including each splice. Tag new wire and cable provided under this contract and existing wire and cable which are indicated to have splices and terminations provided by this contract. The labeling of telecommunications cable tag identifiers shall be in accordance with TIA-606-B. Tag legend shall be as indicated. Do not provide handwritten letters. Install cable tags so that they are clearly visible without disturbing any cabling or wiring in the manholes, handholes, and vaults.

3.2.3 Termination Hardware

Label patch panels, distribution panels, connector blocks and protection modules using color coded labels with identifiers in accordance with TIA-606-B.

3.3 FIELD APPLIED PAINTING

Provide ferrous metallic enclosure finishes in accordance with the following procedures. Ensure that surfaces are dry and clean when the coating is applied. Coat joints and crevices. Prior to assembly, paint surfaces which will be concealed or inaccessible after assembly. Apply primer and finish coat in accordance with the manufacturer's recommendations. Provide ferrous metallic enclosure finishes as specified in Section 09 90 00 PAINTS AND COATINGS.

3.3.1 Cleaning

Clean surfaces in accordance with SSPC SP 6/NACE No.3.

3.3.2 Priming

Prime with a two component polyamide epoxy primer which has a bisphenol-A base, a minimum of 60 percent solids by volume, and an ability to build up a minimum dry film thickness on a vertical surface of 5.0 mils. Apply in two coats to a total dry film thickness of 5 to 8 mils.

3.3.3 Finish Coat

Finish with a two component urethane consisting of saturated polyester polyol resin mixed with aliphatic isocyanate which has a minimum of 50 percent solids by volume. Apply to a minimum dry film thickness of 2 to 3 mils. Color shall be the manufacturer's standard.

3.4 FIELD FABRICATED NAMEPLATE MOUNTING

Provide number, location, and letter designation of nameplates as indicated. Fasten nameplates to the device with a minimum of two sheet-metal screws or two rivets.

3.5 FIELD QUALITY CONTROL

Provide the Contracting Officer 10 working days notice prior to each test. Provide labor, equipment, and incidentals required for testing. Correct defective material and workmanship disclosed as the results of the tests. Furnish a signed copy of the test results to the Contracting Officer within 3 working days after the tests for each segment of construction are completed. Perform testing as construction progresses and do not wait until all construction is complete before starting field tests.

3.5.1 Pre-Installation Tests

Perform the following tests on cable at the job site before it is removed from the cable reel. For cables with factory installed pulling eyes, these tests shall be performed at the factory and certified test results shall accompany the cable.

3.5.1.1 Cable Capacitance

Perform capacitance tests on all pairs within a cable to determine if cable capacitance is within the limits specified.

3.5.1.2 Loop Resistance

Perform DC-loop resistance on all of the pairs within a cable to determine if DC-loop resistance is within the manufacturer's calculated resistance.

3.5.1.3 Pre-Installation Test Results

Provide results of pre-installation tests to the Contracting Officer at least 5 working days before installation is to start. Results shall indicate reel number of the cable, manufacturer, size of cable, pairs tested, and recorded readings. When pre-installation tests indicate that cable does not meet specifications, remove cable from the job site.

3.5.2 Acceptance Tests

Perform acceptance testing in accordance with RUS Bull 1753F-201 and as further specified in this section. Provide personnel, equipment, instrumentation, and supplies necessary to perform required testing. Notification of any planned testing shall be given to the Contracting Officer at least 14 days prior to any test unless specified otherwise. Testing shall not proceed until after the Contractor has received written Contracting Officer's approval of the test plans as specified. Test plans shall define the tests required to ensure that the system meets technical, operational, and performance specifications. The test plans shall define milestones for the tests, equipment, personnel, facilities, and supplies required. The test plans shall identify the capabilities and functions to be tested. Provide test reports to Base Telephone via the Contracting Officer in soft and hard copy in .pdf or .xls form showing all field tests performed, upon completion and testing of the installed system. Measurements shall be tabulated on a pair by pair or strand by strand basis. Blank forms can be provided from Base Telephone upon request.

3.5.2.1 Copper Conductor Cable

Perform the following acceptance tests in accordance with TIA-758:

a. Wire map (pin to pin continuity)

b. Continuity to remote end

c. Crossed pairs

d. Reversed pairs

e. Split pairs

f. Shorts between two or more conductors

g. Grounded pairs.

3.5.2.2 Fiber Optic Cable

Test fiber optic cable in accordance with TIA/EIA-455 and as further specified in this section. Two optical tests shall be performed on all

optical fibers: Optical Time Domain Reflectometry (OTDR) Test, and Attenuation Test. These tests shall be performed on the completed end-to-end spans which include the near-end pre-connectorized single fiber cable assembly, outside plant as specified, outside plant field un-terminated at demarcation point, and the far-end pre-connectorized single fiber cable assembly.

a. OTDR Test: The OTDR test shall be used to determine the adequacy of the cable installations by showing any irregularities, such as discontinuities, micro-bendings or improper splices for the cable span under test. Hard copy fiber signature records shall be obtained from the OTDR for each fiber in each span and shall be included in the test results. The OTDR test shall be measured in both directions. A reference length of fiber, 1000 feet minimum, used as the delay line shall be placed before the new end connector and after the far end patch panel connectors for inspection of connector signature. Conduct OTDR test and provide calculation or interpretation of results in accordance with TIA-526-7 for single-mode fiber and TIA-526-14 for multimode fiber. Splice losses shall not exceed 0.3 db.

b. Attenuation Test: End-to-end attenuation measurements shall be made on all fibers, in both directions, using a 850 & 1300 nanometer light source for 62.5 multi-mode fiber and 1310 & 1550 nanometer light source for single mode fiber at one end and the optical power meter on the other end to verify that the cable system attenuation requirements are met in accordance with TIA-455-46A for multimode and TIA-526-7 for single-mode fiber optic cables. The measurement method shall be in accordance with TIA-455-78-B. Attenuation losses shall not exceed 0.5 db/km at 1310 nm and 1550 nm for single-mode fiber. Attenuation losses shall not exceed 5.0 db/km at 850 nm and 1.5 db/km at 1300 nm for multimode fiber.

c. Bandwidth Test: The end-to-end bandwidth of all multimode fiber span links shall be measured by the frequency domain method. The bandwidth shall be measured in both directions on all fibers. The bandwidth measurements shall be in accordance with TIA/EIA-455-204.

3.5.3 Soil Density Tests

a. Determine soil-density relationships for compaction of backfill material in accordance with ASTM D1557, Method D.

b. Determine soil-density relationships as specified for soil tests in Section 31 23 00.00 20 EXCAVATION AND FILL.

-- End of Section --

SECTION 33 71 02

UNDERGROUND ELECTRICAL DISTRIBUTION
02/14

PART 1 GENERAL

1.1 REFERENCES

The publications listed below form a part of this specification to the extent referenced. The publications are referred to within the text by the basic designation only.

AMERICAN ASSOCIATION OF STATE HIGHWAY AND TRANSPORTATION OFFICIALS (AASHTO)

AASHTO HB-17	(2002; Errata 2003; Errata 2005, 17th Edition) Standard Specifications for Highway Bridges

AMERICAN CONCRETE INSTITUTE INTERNATIONAL (ACI)

ACI 318M	(2011; Errata 2013) Building Code Requirements for Structural Concrete & Commentary
ACI SP-66	(2004) ACI Detailing Manual

ASSOCIATION OF EDISON ILLUMINATING COMPANIES (AEIC)

AEIC CS8	(2007) specification for Extruded Dielectric Shielded Power Cables Rated 5 Through 46 kV

ASTM INTERNATIONAL (ASTM)

ASTM B1	(2013) Standard Specification for Hard-Drawn Copper Wire
ASTM B3	(2013) Standard Specification for Soft or Annealed Copper Wire
ASTM B496	(2013a) Standard Specification for Compact Round Concentric-Lay-Stranded Copper Conductors
ASTM B8	(2011) Standard Specification for Concentric-Lay-Stranded Copper Conductors, Hard, Medium-Hard, or Soft
ASTM C139	(2011) Standard Specification for Concrete Masonry Units for Construction of Catch Basins and Manholes
ASTM C309	(2011) Standard Specification for Liquid Membrane-Forming Compounds for Curing Concrete

ASTM C478	(2013) Standard Specification for Precast Reinforced Concrete Manhole Sections
ASTM C857	(2013) Standard Practice for Minimum Structural Design Loading for Underground Precast Concrete Utility Structures
ASTM C990	(2009) Standard Specification for Joints for Concrete Pipe, Manholes and Precast Box Sections Using Preformed Flexible Joint Sealants
ASTM F2160	(2010) Standard Specification for Solid Wall High Density Polyethylene (HDPE) Conduit Based on Controlled Outside Diameter (OD)
ASTM F512	(2012) Smooth-Wall Poly (Vinyl Chloride) (PVC) Conduit and Fittings for Underground Installation

INSTITUTE OF ELECTRICAL AND ELECTRONICS ENGINEERS (IEEE)

IEEE 386	(2006; INT 1 2011) Standard for Separable Insulated Connector Systems for Power Distribution Systems Above 600V
IEEE 400.2	(2013) Guide for Field Testing of Shielded Power Cable Systems Using Very Low Frequency (VLF)
IEEE 48	(2009) Standard for Test Procedures and Requirements for Alternating-Current Cable Terminations Used on Shielded Cables Having Laminated Insulation Rated 2.5 kV through 765 kV or Extruded Insulation Rated 2.5 kV through 500 kV
IEEE 81	(2012) Guide for Measuring Earth Resistivity, Ground Impedance, and Earth Surface Potentials of a Ground System
IEEE C2	(2012; Errata 2012; INT 1-4 2012; INT 5-7 2013) National Electrical Safety Code
IEEE C37.20.3	(2013) Standard for Metal-Enclosed Interrupter Switchgear
IEEE Stds Dictionary	(2009) IEEE Standards Dictionary: Glossary of Terms & Definitions

INTERNATIONAL ELECTRICAL TESTING ASSOCIATION (NETA)

NETA ATS	(2013) Standard for Acceptance Testing Specifications for Electrical Power Equipment and Systems

NATIONAL ELECTRICAL MANUFACTURERS ASSOCIATION (NEMA)

ANSI C119.1	(2011) Electric Connectors - Sealed Insulated Underground Connector Systems Rated 600 Volts
ANSI/NEMA WC 71/ICEA S-96-659	(1999) Standard for Nonshielded Cables Rated 2001-5000 Volts for use in the Distribution of Electric Energy
NEMA RN 1	(2005; R 2013) Polyvinyl-Chloride (PVC) Externally Coated Galvanized Rigid Steel Conduit and Intermediate Metal Conduit
NEMA TC 2	(2013) Standard for Electrical Polyvinyl Chloride (PVC) Conduit
NEMA TC 7	(2013) Standard for Smooth-Wall Coilable Electrical Polyethylene Conduit
NEMA TC 9	(2004) Standard for Fittings for Polyvinyl Chloride (PVC) Plastic Utilities Duct for Underground Installation
NEMA WC 74/ICEA S-93-639	(2012) 5-46 kV Shielded Power Cable for Use in the Transmission and Distribution of Electric Energy

NATIONAL FIRE PROTECTION ASSOCIATION (NFPA)

NFPA 70	(2014; AMD 1 2013; Errata 1 2013; AMD 2 2013; Errata 2 2013; AMD 3 2014; Errata 3-4 2014; AMD 4-6 2014) National Electrical Code

TELECOMMUNICATIONS INDUSTRY ASSOCIATION (TIA)

TIA-758	(2012b) Customer-Owned Outside Plant Telecommunications Infrastructure Standard

THE SOCIETY OF CABLE TELECOMMUNICATIONS ENGINEERS (SCTE)

ANSI/SCTE 77	(2013) Specification for Underground Enclosure Integrity

U.S. DEPARTMENT OF AGRICULTURE (USDA)

RUS Bull 1751F-644	(2002) Underground Plant Construction

UNDERWRITERS LABORATORIES (UL)

UL 1072	(2006; Reprint Jun 2013) Medium-Voltage Power Cables
UL 44	(2010) Thermoset-Insulated Wires and Cables
UL 467	(2007) Grounding and Bonding Equipment
UL 486A-486B	(2013; Reprint Dec 2013) Wire Connectors

UL 510	(2005; Reprint Jul 2013) Polyvinyl Chloride, Polyethylene and Rubber Insulating Tape
UL 514A	(2013) Metallic Outlet Boxes
UL 514B	(2012) Conduit, Tubing and Cable Fittings
UL 6	(2007; reprint Nov 2010) Electrical Rigid Metal Conduit-Steel
UL 651	(2011; Reprint Mar 2012) Standard for Schedule 40 and 80 Rigid PVC Conduit and Fittings
UL 83	(2014) Thermoplastic-Insulated Wires and Cables
UL 854	(2004; Reprint Sep 2011) Standard for Service-Entrance Cables

1.2 DEFINITIONS

a. Unless otherwise specified or indicated, electrical and electronics terms used in these specifications, and on the drawings, are as defined in IEEE Stds Dictionary.

b. In the text of this section, the words conduit and duct are used interchangeably and have the same meaning.

c. In the text of this section, "medium voltage cable splices," and "medium voltage cable joints" are used interchangeably and have the same meaning.

1.3 SUBMITTALS

Government approval is required for submittals with a "G" designation; submittals not having a "G" designation are for Contractor Quality Control approval. Submit the following in accordance with Section 01 33 00 SUBMITTAL PROCEDURES:

SD-02 Shop Drawings

Precast underground structures; G

SD-03 Product Data

Medium voltage cable; G

Medium voltage cable terminations; G

Precast concrete structures; G

Sealing Material

Handhole frames and covers; G

Composite/fiberglass handholes; G

SD-06 Test Reports

Medium voltage cable qualification and production tests; G

Field Acceptance Checks and Tests; G

Cable Installation Plan and Procedure

Six copies of the information described below in 8-1/2 by 11 inch binders having a minimum of three rings from which material may readily be removed and replaced, including a separate section for each cable pull. Separate sections by heavy plastic dividers with tabs, with all data sheets signed and dated by the person supervising the pull.

a. Site layout drawing with cable pulls numerically identified.

b. A list of equipment used, with calibration certifications. The manufacturer and quantity of lubricant used on pull.

c. The cable manufacturer and type of cable.

d. The dates of cable pulls, time of day, and ambient temperature.

e. The length of cable pull and calculated cable pulling tensions.

f. The actual cable pulling tensions encountered during pull.

SD-07 Certificates

Public Utility - Electrical Contractor's License; G

Cable splicer/terminator; G

Cable Installer Qualifications; G

Directional Boring Certificate of Conformance; G

1.4 QUALITY ASSURANCE

1.4.1 Utility Contractor Qualifications

The Contractor must possess a valid North Carolina Public Utility - Electrical Contractor's License or equivalent from another state and be insured to do such work.

1.4.2 Precast Underground Structures

Submittal required for each type used. Provide calculations and drawings for precast manholes and handholes bearing the seal of a registered professional engineer including:

a. Material description (i.e., f'c and Fy)

b. Manufacturer's printed assembly and installation instructions

c. Design calculations

d. Reinforcing shop drawings in accordance with ACI SP-66

e. Plans and elevations showing opening and pulling-in iron locations and details

1.4.3 Certificate of Competency for Cable Splicer/Terminator

The cable splicer/terminator must have a certification from the National Cable Splicing Certification Board (NCSCB) in the field of splicing and terminating shielded medium voltage (5 kV to 35 kV) power cable using pre-manufactured kits (pre-molded, heat-shrink, cold shrink). Submit "Proof of Certification" for approval, for the individuals that will be performing cable splicer and termination work, 30 days before splices or terminations are to be made.

1.4.4 Cable Installer Qualifications

Provide at least one onsite person in a supervisory position with a documentable level of competency and experience to supervise all cable pulling operations. Provide a resume showing the cable installers' experience in the last three years, including a list of references complete with points of contact, addresses and telephone numbers. Cable installer must demonstrate experience with a minimum of three medium voltage cable installations. The Contracting Officer reserves the right to require additional proof of competency or to reject the individual and call for an alternate qualified cable installer.

1.4.5 Directional Boring Certificate of Conformance

Provide certification of compliance with the registered Professional Engineer's design requirements for each directional bore, including: HDPE conduit size and type, bend radius, elevation changes, vertical and horizontal path deviations, conductor size and type and any conductor derating due to depth of conduit. Record location and depth of all directional-bore installed HDPE conduits using Global Positioning System (GPS) recording means with "resource grade" accuracy.

1.4.6 Regulatory Requirements

In each of the publications referred to herein, consider the advisory provisions to be mandatory, as though the word, "must" had been substituted for "should" wherever it appears. Interpret references in these publications to the "authority having jurisdiction," or words of similar meaning, to mean the Contracting Officer. Equipment, materials, installation, and workmanship must be in accordance with the mandatory and advisory provisions of IEEE C2 and NFPA 70 unless more stringent requirements are specified or indicated.

1.4.7 Standard Products

Provide materials and equipment that are products of manufacturers regularly engaged in the production of such products which are of equal material, design and workmanship. Products must have been in satisfactory commercial or industrial use for 2 years prior to bid opening. The 2-year period must include applications of equipment and materials under similar circumstances and of similar size. The product must have been for sale on the commercial market through advertisements, manufacturers' catalogs, or

brochures during the 2-year period. Where two or more items of the same class of equipment are required, these items must be products of a single manufacturer; however, the component parts of the item need not be the products of the same manufacturer unless stated in this section.

1.4.7.1 Alternative Qualifications

Products having less than a 2-year field service record will be acceptable if a certified record of satisfactory field operation for not less than 6000 hours, exclusive of the manufacturers' factory or laboratory tests, is furnished.

1.4.7.2 Material and Equipment Manufacturing Date

Products manufactured more than 3 years prior to date of delivery to site are not acceptable, unless specified otherwise.

PART 2 PRODUCTS

2.1 CONDUIT, DUCTS, AND FITTINGS

2.1.1 Rigid Metal Conduit

UL 6.

2.1.1.1 Rigid Metallic Conduit, PVC Coated

NEMA RN 1, Type A40, except that hardness must be nominal 85 Shore A durometer, dielectric strength must be minimum 400 volts per mil at 60 Hz, and tensile strength must be minimum 3500 psi.

2.1.2 Plastic Conduit for Direct Burial

UL 651, Schedule 402.1.3 Plastic Duct for Concrete Encasement

UL 651 and ASTM F512, NEMA TC 2, Type EPC-40-PVC.

2.1.4 High Density Polyethylene (HDPE) Electrical Conduit for Directional Boring

Smoothwall, approved/listed for directional boring, minimum Schedule 80, ASTM F2160, NEMA TC 7.

2.1.5 Innerduct

Provide corrugated polyethylene (PE) or PVC innerducts, or fabric-mesh innerducts, with pullwire. Size as indicated.

2.1.6 Conduit Sealing Compound

Compounds for sealing ducts and conduit must have a putty-like consistency workable with the hands at temperatures as low as 35 degrees F, must neither slump at a temperature of 300 degrees F, nor harden materially when exposed to the air. Compounds must adhere to clean surfaces of fiber or plastic ducts; metallic conduits or conduit coatings; concrete, masonry, or lead; any cable sheaths, jackets, covers, or insulation materials; and the common metals. Compounds must form a seal without dissolving, noticeably changing characteristics, or removing any of the ingredients. Compounds must have no injurious effect upon the hands of workmen or upon materials.

Inflatable bladders may be used as an option.

2.1.7 Fittings

2.1.7.1 Metal Fittings

UL 514B.

2.1.7.2 PVC Conduit Fittings

UL 514B, UL 651.

2.1.7.3 PVC Duct Fittings

NEMA TC 9.

2.1.7.4 Outlet Boxes for Steel Conduit

Outlet boxes for use with rigid or flexible steel conduit must be cast-metal cadmium or zinc-coated if of ferrous metal with gasketed closures and must conform to UL 514A.

2.2 LOW VOLTAGE INSULATED CONDUCTORS AND CABLES

Insulated conductors must be rated 600 volts and conform to the requirements of NFPA 70, including listing requirements. Wires and cables manufactured more than 24 months prior to date of delivery to the site are not acceptable. Service entrance conductors must conform to UL 854, type USE.

2.2.1 Conductor Types

Cable and duct sizes indicated are for copper conductors and THHN/THWN unless otherwise noted. Conductors No. 10 AWG and smaller must be solid. Conductors No. 8 AWG and larger must be stranded. All conductors must be copper.

2.2.2 Conductor Material

Unless specified or indicated otherwise or required by NFPA 70, wires in conduit, other than service entrance, must be 600-volt, Type THWN/THHN conforming to UL 83 or Type XHHW conforming to UL 44. Copper conductors must be annealed copper complying with ASTM B3 and ASTM B8.

2.2.3 Jackets

Multiconductor cables must have an overall PVC outer jacket.

2.2.4 Cable Marking

Insulated conductors must have the date of manufacture and other identification imprinted on the outer surface of each cable at regular intervals throughout the cable length.

Identify each cable by means of a fiber, laminated plastic, or non-ferrous metal tags, or approved equal, in each manhole, handhole, junction box, and each terminal. Each tag must contain the following information; cable type, conductor size, circuit number, circuit voltage, cable destination and phase identification.

Conductors must be color coded. Provide conductor identification within each enclosure where a tap, splice, or termination is made. Conductor identification must be by color-coded insulated conductors, plastic-coated self-sticking printed markers, colored nylon cable ties and plates, heat shrink type sleeves,or colored electrical tape. Control circuit terminations must be properly identified. Color must be green for grounding conductors and white for neutrals; except where neutrals of more than one system are installed in same raceway or box, other neutrals must be white with a different colored (not green) stripe for each. Color of ungrounded conductors in different voltage systems must be as follows:

a. 208/120 volt, three-phase

(1) Phase A - black

(2) Phase B - red

(3) Phase C - blue

b. 480/277 volt, three-phase

(1) Phase A - brown

(2) Phase B - orange

(3) Phase C - yellow

2.3 LOW VOLTAGE WIRE CONNECTORS AND TERMINALS

Must provide a uniform compression over the entire conductor contact surface. Use solderless terminal lugs on stranded conductors.

a. For use with copper conductors: UL 486A-486B.

2.4 LOW VOLTAGE SPLICES

Provide splices in conductors with a compression connector on the conductor and by insulating and waterproofing using one of the following methods which are suitable for continuous submersion in water and comply with ANSI C119.1.

2.4.1 Heat Shrinkable Splice

Provide heat shrinkable splice insulation by means of a thermoplastic adhesive sealant material applied in accordance with the manufacturer's written instructions.

2.4.2 Cold Shrink Rubber Splice

Provide a cold-shrink rubber splice which consists of EPDM rubber tube which has been factory stretched onto a spiraled core which is removed during splice installation. The installation must not require heat or flame, or any additional materials such as covering or adhesive. It must be designed for use with inline compression type connectors, or indoor, outdoor, direct-burial or submerged locations.

2.5 MEDIUM VOLTAGE CABLE

Cable (conductor) sizes are designated by American Wire Gauge (AWG) and Thousand Circular Mils (Kcmil). Conductor and conduit sizes indicated are for copper conductors unless otherwise noted. Insulated conductors must have the date of manufacture and other identification imprinted on the outer surface of each cable at regular intervals throughout cable length. Wires and cables manufactured more than 24 months prior to date of delivery to the site are not acceptable. Provide single conductor type cables unless otherwise indicated.

2.5.1 Cable Configuration

Provide Type MV cable, conforming to NEMA WC 74/ICEA S-93-639 and UL 1072. Provide cables manufactured for use in duct applications. Cable must be rated 15 kV with 133 percent insulation level.

2.5.2 Conductor Material

Provide concentric-lay-stranded, Class B conductors. Provide soft drawn copper cables complying with ASTM B3 and ASTM B8 for regular concentric and compressed stranding or ASTM B496 for compact stranding.

2.5.3 Insulation

Provide ethylene-propylene-rubber (EPR) insulation conforming to the requirements of ANSI/NEMA WC 71/ICEA S-96-659 and AEIC CS8.

2.5.4 Shielding

Cables rated for 2 kV and above must have a semiconducting conductor shield, a semiconducting insulation shield, and an overall copper tape shield for each phase.

2.5.5 Neutrals

Neutral conductors must be copper, employing the same insulation and jacket materials as phase conductors, except that a 600-volt insulation rating is acceptable.2.5.6 Jackets

Provide cables with a PVC jacket. Provide PVC jackets with a separator that prevents contact with underlying semiconducting insulating shield.

2.6 MEDIUM VOLTAGE CABLE TERMINATIONS

IEEE 48 Class 1; of the molded elastomer, prestretched elastomer, or heat-shrinkable elastomer. Acceptable elastomers are track-resistant silicone rubber or track-resistant ethylene propylene compounds, such as ethylene propylene rubber or ethylene propylene diene monomer. Separable insulated connectors may be used for apparatus terminations, when such apparatus is provided with suitable bushings. Terminations, where required, must be provided with mounting brackets suitable for the intended installation and with grounding provisions for the cable shielding, metallic sheath, or armor. Terminations must be provided in a kit, including: skirts, stress control terminator, ground clamp, connectors, lugs, and complete instructions for assembly and installation. Terminations must be the product of one manufacturer, suitable for the type, diameter, insulation class and level, and materials of the cable terminated. Do not use separate parts of copper or copper alloy in contact

with aluminum alloy parts in the construction or installation of the terminator.

2.6.1 Cold-Shrink Type

Terminator must be a one-piece design, utilizing the manufacturer's latest technology, where high-dielectric constant (capacitive) stress control is integrated within a skirted insulator made of silicone rubber. Termination must not require heat or flame for installation. Termination kit must contain all necessary materials (except for the lugs). Termination must be designed for installation in low or highly contaminated indoor and outdoor locations and must resist ultraviolet rays and oxidative decomposition.

2.6.2 Heat Shrinkable Type

Terminator must consist of a uniform cross section heat shrinkable polymeric construction stress relief tubing and environmentally sealed outer covering that is nontracking, resists heavy atmospheric contaminants, ultra violet rays and oxidative decomposition. Provide heat shrinkable sheds or skirts of the same material. Termination must be designed for installation in low or highly contaminated indoor or outdoor locations.

2.6.3 Separable Insulated Connector Type

IEEE 386. Provide connector with steel reinforced hook-stick eye, grounding eye, test point, and arc-quenching contact material. Provide connectors of the loadbreak or deadbreak type as indicated, of suitable construction for the application and the type of cable connected, and that include cable shield adaptors. Provide external clamping points and test points. Separable connectors must not be used in manholes/handholes.

a. 200 Ampere loadbreak connector ratings: Voltage: 15 kV, 95 kV BIL. Short time rating: 10,000 rms symmetrical amperes.

2.7 MEDIUM VOLTAGE CABLE JOINTS

Medium voltage cables are not routed through any underground structures on this project. Medium voltage cable joints are therefore not allowed.

2.8 TELECOMMUNICATIONS CABLING

Provide telecommunications cabling in accordance with Section 33 82 00 TELECOMMUNICATIONS OUTSIDE PLANT (OSP).

2.9 TAPE

2.9.1 Insulating Tape

UL 510, plastic insulating tape, capable of performing in a continuous temperature environment of 80 degrees C.

2.9.2 Buried Warning and Identification Tape

Provide detectable tape in accordance with Section 31 23 00.00 20 EXCAVATION AND FILL.

2.10 PULL ROPE

Plastic or flat pull line (bull line) having a minimum tensile strength of

200 pounds.

2.11 GROUNDING AND BONDING

2.11.1 Driven Ground Rods

Provide copper-clad steel ground rods conforming to UL 467 not less than 3/4 inch in diameter by 10 feet in length. Sectional type rods may be used for rods 20 feet or longer.

2.11.2 Grounding Conductors

Stranded-bare copper conductors must conform to ASTM B8, Class B, soft-drawn unless otherwise indicated. Solid-bare copper conductors must conform to ASTM B1 for sizes No. 8 and smaller. Insulated conductors must be of the same material as phase conductors and green color-coded, except that conductors must be rated no more than 600 volts. Aluminum is not acceptable.

2.12 CAST-IN-PLACE CONCRETE

Provide concrete in accordance with Section 03 30 00 CAST-IN-PLACE CONCRETE . In addition, provide concrete for encasement of underground ducts with 3000 psi minimum 28-day compressive strength. Concrete associated with electrical work for other than encasement of underground ducts must be 4000 psi minimum 28-day compressive strength unless specified otherwise.

2.13 UNDERGROUND STRUCTURES

Provide precast concrete underground structures or standard type cast-in-place manhole types as indicated, conforming to ASTM C857 and ASTM C478. Top, walls, and bottom must consist of reinforced concrete. Walls and bottom must be of monolithic concrete construction. Locate duct entrances and windows near the corners of structures to facilitate cable racking. Covers must fit the frames without undue play. Form steel and iron to shape and size with sharp lines and angles. Castings must be free from warp and blow holes that may impair strength or appearance. Exposed metal must have a smooth finish and sharp lines and arises. Provide necessary lugs, rabbets, and brackets. Set pulling-in irons and other built-in items in place before depositing concrete. Install a pulling-in iron in the wall opposite each duct line entrance. Cable racks, including rack arms and insulators, must be adequate to accommodate the cable.

2.13.1 Cast-In-Place Concrete Structures

Concrete must conform to Section 03 30 00 CAST-IN-PLACE CONCRETE. Construct walls on a footing of cast-in-place concrete except that precast concrete base sections may be used for precast concrete manhole risers. Concrete block must conform to ASTM C139 and Section 04 20 00, MASONRY.

2.13.2 Precast Concrete Structures, Risers and Tops

Precast concrete underground structures may be provided in lieu of cast-in-place subject to the requirements specified below. Precast units must be the product of a manufacturer regularly engaged in the manufacture of precast concrete products, including precast manholes.

2.13.2.1 General

Precast concrete structures must have the same accessories and facilities as required for cast-in-place structures. Likewise, precast structures must have plan area and clear heights not less than those of cast-in-place structures. Concrete materials and methods of construction must be the same as for cast-in-place concrete construction, as modified herein. Slope in floor may be omitted provided precast sections are poured in reinforced steel forms. Concrete for precast work must have a 28-day compressive strength of not less than 4000 psi. Structures may be precast to the design and details indicated for cast-in-place construction, precast monolithically and placed as a unit, or structures may be assembled sections, designed and produced by the manufacturer in accordance with the requirements specified. Structures must be identified with the manufacturer's name embedded in or otherwise permanently attached to an interior wall face.

2.13.2.2 Design for Precast Structures

ACI 318M. In the absence of detailed on-site soil information, design for the following soil parameters/site conditions:

a. Angle of Internal Friction (phi) = 30 degrees

b. Unit Weight of Soil (Dry) = 110 pcf, (Saturated) = 130 pcf

c. Coefficient of Lateral Earth Pressure (Ka) = 0.33

d. Ground Water Level = 3 feet below ground elevation

e. Vertical design loads must include full dead, superimposed dead, and live loads including a 30 percent magnification factor for impact. Live loads must consider all types and magnitudes of vehicular (automotive, industrial, or aircraft) traffic to be encountered. The minimum design vertical load must be for H20 highway loading per AASHTO HB-17.

f. Horizontal design loads must include full geostatic and hydrostatic pressures for the soil parameters, water table, and depth of installation to be encountered. Also, horizontal loads imposed by adjacent structure foundations, and horizontal load components of vertical design loads, including impact, must be considered, along with a pulling-in iron design load of 6000 pounds.

g. Each structural component must be designed for the load combination and positioning resulting in the maximum shear and moment for thatparticular component.

h. Design must also consider the live loads induced in the handling, installation, and backfilling of the manholes. Provide lifting devices to ensure structural integrity during handling and installation.

2.13.2.3 Construction

Structure top, bottom, and wall must be of a uniform thickness of not less than 6 inches. Thin-walled knock-out panels for designed or future duct bank entrances are not permitted. Provide quantity, size, and location of duct bank entrance windows as directed, and cast completely open by the

precaster. Size of windows must exceed the nominal duct bank envelope dimensions by at least 12 inches vertically and horizontally to preclude in-field window modifications made necessary by duct bank misalignment. However, the sides of precast windows must be a minimum of 6 inches from the inside surface of adjacent walls, floors, or ceilings. Form the perimeter of precast window openings to have a keyed or inward flared surface to provide a positive interlock with the mating duct bank envelope. Provide welded wire fabric reinforcing through window openings for in-field cutting and flaring into duct bank envelopes. Provide additional reinforcing steel comprised of at least two No. 4 bars around window openings. Provide drain sumps a minimum of 12 inches in diameter and 4 inches deep for precast structures.

2.13.2.4 Joints

Provide tongue-and-groove joints on mating edges of precast components. Shiplap joints are not allowed. Design joints to firmly interlock adjoining components and to provide waterproof junctions and adequate shear transfer. Seal joints watertight using preformed plastic strip conforming to ASTM C990. Install sealing material in strict accordance with the sealant manufacturer's printed instructions. Provide waterproofing at conduit/duct entrances into structures, and where access frame meets the top slab, provide continuous grout seal.

2.13.3 Handhole Frames and Covers

Frames and covers of steel must be welded by qualified welders in accordance with standard commercial practice. Steel covers must be rolled-steel floor plate having an approved antislip surface. Hinges must be of stainless steel with bronze hinge pin , 5 by 5 inches by approximately 3/16 inch thick, without screw holes, and must be for full surface application by fillet welding. Hinges must have nonremovable pins and five knuckles. The surfaces of plates under hinges must be true after the removal of raised antislip surface, by grinding or other approved method.

2.13.4 Composite/Fiberglass Handholes and Covers

Provide handholes and covers of polymer concrete, reinforced with heavy weave fiberglass conforming to ANSI/SCTE 77.

2.14 MEDIUM VOLTAGE ABOVE GROUND CABLE TERMINATING CABINETS

Cable terminating cabinets must be hook-stick operable, deadfront construction conforming to the requirements of IEEE C37.20.3, Category A. Provide cabinets with 200 A. loadbreak junctions and elbow-type separable loadbreak connectors, cable parking stands, and grounding lugs. Provide cable terminating equipment in conformance with IEEE 386.

Ratings at 60 Hz must be:

Nominal voltage (kV)	12.47
Rated maximum voltage (kV)	15
Rated continuous current (A)	200
One-second short-time current-carrying capacity (kA)	12

BIL (kV)	95

2.15 SOURCE QUALITY CONTROL

2.15.1 Medium Voltage Cable Qualification and Production Tests

Results of AEIC CS8 qualification and production tests as applicable for each type of medium voltage cable.

PART 3 EXECUTION

3.1 INSTALLATION

Install equipment and devices in accordance with the manufacturer's published instructions and with the requirements and recommendations of NFPA 70 and IEEE C2 as applicable. In addition to these requirements, install telecommunications in accordance with TIA-758 and RUS Bull 1751F-644.

Cable must be stored in a location protected from vandalism and weather. If cable is stored outside, then it must be off the ground, covered with opaque plastic or canvas, with provision for ventilation to prevent condensation and for protection from weather.

3.2 CABLE INSPECTION

Inspect each cable reel for correct storage positions, signs of physical damage, and broken end seals prior to installation. If end seal is broken, remove moisture from cable prior to installation in accordance with the cable manufacturer's recommendations.

3.3 CABLE INSTALLATION PLAN AND PROCEDURE

Obtain from the manufacturer an installation manual or set of instructions which addresses such aspects as cable construction, insulation type, cable diameter, bending radius, cable temperature limits for installation, lubricants, coefficient of friction, conduit cleaning, storage procedures, moisture seals, testing for and purging moisture, maximum allowable pulling tension, and maximum allowable sidewall bearing pressure. Prepare a checklist of significant requirements and submit along with the manufacturer's instructions in accordance with SUBMITTALS. Install cable strictly in accordance with the cable manufacturer's recommendations and the approved installation plan.

3.4 UNDERGROUND FEEDERS SUPPLYING BUILDINGS

Terminate underground feeders supplying building at a point 5 feet outside the building and projections thereof, except that conductors must be continuous to the terminating point indicated. Coordinate connections of the feeders to the service entrance equipment with Section 26 20 00 INTERIOR DISTRIBUTION SYSTEM. Provide PVC, Type EPC-40 conduit from the supply equipment to a point 5 feet outside the building and projections thereof. Protect ends of underground conduit with plastic plugs until connections are made.

Encase the underground portion of the conduit in a concrete envelope and bury as specified for underground duct with concrete encasement.

3.5 UNDERGROUND STRUCTURE CONSTRUCTION

Provide standard type cast-in-place construction as specified herein and as indicated, or precast construction as specified herein. Horizontal concrete surfaces of floors must have a smooth trowel finish. Cure concrete by applying two coats of white pigmented membrane forming-curing compound in strict accordance with the manufacturer's printed instructions, except that precast concrete may be steam cured. Curing compound must conform to ASTM C309. Locate duct entrances and windows in the center of end walls (shorter) and near the corners of sidewalls (longer) to facilitate cable racking and splicing. Covers for underground structures must fit the frames without undue play. Steel and iron must be formed to shape and size with sharp lines and angles. Castings must be free from warp and blow holes that may impair strength or appearance. Exposed metal must have a smooth finish and sharp lines and arises. Provide necessary lugs, rabbets, and brackets. Set pulling-in irons and other built-in items in place before depositing concrete. Manhole locations, as indicated, are approximate. Coordinate exact manhole locations with other utilities and finished grading and paving.

3.5.1 Cast-In-Place Concrete Structures

Construct walls on a footing of cast-in-place concrete except that precast concrete base sections may be used for precast concrete manhole risers.Provide concrete block conforming to ASTM C139 and Section 04 20 00 MASONRY.

3.5.2 Precast Concrete Construction

Set commercial precast structures on 6 inches of level, 90 percent compacted granular fill, 3/4 inch to 1 inch size, extending 12 inches beyond the structure on each side. Compact granular fill by a minimum of four passes with a plate type vibrator. Installation must additionally conform to the manufacturer's instructions.

3.5.3 Field Painting

Cast-iron frames and covers not buried in concrete or masonry must be cleaned of mortar, rust, grease, dirt and other deleterious materials, and given a coat of bituminous paint.

3.6 UNDERGROUND CONDUIT AND DUCT SYSTEMS

3.6.1 Requirements

Run conduit in straight lines except where a change of direction is necessary. Provide numbers and sizes of ducts as indicated. Ducts must have a continuous slope downward toward underground structures and away from buildings, laid with a minimum slope of 3 inches per 100 feet. Depending on the contour of the finished grade, the high-point may be at a terminal, a manhole, a handhole, or between manholes or handholes. Short-radius manufactured 90-degree duct bends may be used only for pole or equipment risers, unless specifically indicated as acceptable. The minimum manufactured bend radius must be 18 inches for ducts of less than 3 inch diameter, and 36 inches for ducts 3 inches or greater in diameter. Otherwise, long sweep bends having a minimum radius of 25 feet must be used for a change of direction of more than 5 degrees, either horizontally or vertically. Both curved and straight sections may be used to form long sweep bends, but the maximum curve used must be 30 degrees and manufactured

bends must be used. Provide ducts with end bells whenever duct lines terminate in structures.

3.6.2 Treatment

Ducts must be kept clean of concrete, dirt, or foreign substances during construction. Field cuts requiring tapers must be made with proper tools and match factory tapers. A coupling recommended by the duct manufacturer must be used whenever an existing duct is connected to a duct of different material or shape. Ducts must be stored to avoid warping and deterioration with ends sufficiently plugged to prevent entry of any water or solid substances. Ducts must be thoroughly cleaned before being laid. Plastic ducts must be stored on a flat surface and protected from the direct rays of the sun.

3.6.3 Conduit Cleaning

As each conduit run is completed, for conduit sizes 3 inches and larger, draw a flexible testing mandrel approximately 12 inches long with a diameter less than the inside diameter of the conduit through the conduit. After which, draw a stiff bristle brush through until conduit is clear of particles of earth, sand and gravel; then immediately install conduit plugs. For conduit sizes less than 3 inches, draw a stiff bristle brush through until conduit is clear of particles of earth, sand and gravel; then immediately install conduit plugs.

3.6.4 Jacking and Drilling Under Roads and Structures

Conduits to be installed under existing paved areas which are not to be disturbed, and under roads and railroad tracks, must be zinc-coated, rigid steel, jacked into place. Where ducts are jacked under existing pavement, rigid steel conduit must be installed because of its strength. To protect the corrosion-resistant conduit coating, predrilling or installing conduit inside a larger iron pipe sleeve (jack-and-sleeve) is required. Separators or spacing blocks must be made of steel, concrete, plastic, or a combination of these materials placed not farther apart than 4 feet on centers. Hydraulic jet method must not be used.

3.6.5 Galvanized Conduit Concrete Penetrations

Galvanized conduits which penetrate concrete (slabs, pavement, and walls) in wet locations must be PVC coated and must extend from at least 2 inches within the concrete to the first coupling or fitting outside the concrete (minimum of 6 inches from penetration).

3.6.6 Multiple Conduits

Separate multiple conduits by a minimum distance of 3 inches, except that light and power conduits must be separated from control, signal, and telephone conduits by a minimum distance of 12 inches. Stagger the joints of the conduits by rows (horizontally) and layers (vertically) to strengthen the conduit assembly. Provide plastic duct spacers that interlock vertically and horizontally. Spacer assembly must consist of base spacers, intermediate spacers, ties, and locking device on top to provide a completely enclosed and locked-in conduit assembly. Install spacers per manufacturer's instructions, but provide a minimum of two spacer assemblies per 10 feet of conduit assembly.

3.6.7 Conduit Plugs and Pull Rope

New conduit indicated as being unused or empty must be provided with plugs on each end. Plugs must contain a weephole or screen to allow water drainage. Provide a plastic pull rope having 3 feet of slack at each end of unused or empty conduits.

3.6.8 Conduit and Duct Without Concrete Encasement

Depths to top of the conduit must be not less than 24 inches below finished grade. Provide not less than 3 inches clearance from the conduit to each side of the trench. Grade bottom of trench smooth; where rock, soft spots, or sharp-edged materials are encountered, excavate the bottom for an additional 3 inches, fill and tamp level with original bottom with sand or earth free from particles, that would be retained on a 1/4 inch sieve. The first 6 inch layer of backfill cover must be sand compacted as previously specified. The rest of the excavation must be backfilled and compacted in 3 to 6 inch layers. Provide color, type and depth of warning tape as specified in Section 31 23 00.00 20 EXCAVATION AND FILL.

3.6.8.1 Encasement Under Roads and Structures

Under roads and paved areas, install conduits in concrete encasement of rectangular cross-section providing a minimum of 3 inch concrete cover around ducts. Concrete encasement must extend at least 5 feet beyond the edges of paved areas and roads. Depths to top of the concrete envelope must be not less than 24 inches below finished grade.

3.6.8.2 Directional Boring

HDPE conduits must be installed below the frostline and as specified herein.

3.6.9 Duct Encased in Concrete

Construct underground duct lines of individual conduits encased in concrete. Depths to top of the concrete envelope must be not less than 18 inches below finished grade, except under roads and pavement, concrete envelope must be not less than 24 inches below finished grade. Do not mix different kinds of conduit in any one duct bank. Concrete encasement surrounding the bank must be rectangular in cross-section and must provide at least 3 inches of concrete cover for ducts. Separate conduits by a minimum concrete thickness of 3 inches. Before pouring concrete, anchor duct bank assemblies to prevent the assemblies from floating during concrete pouring. Anchoring must be done by driving reinforcing rods adjacent to duct spacer assemblies and attaching the rods to the spacer assembly. Provide color, type and depth of warning tape as specified in Section 31 23 00.00 20 EXCAVATION AND FILL.

3.6.9.1 Connections to Manholes

Duct bank envelopes connecting to underground structures must be flared to have enlarged cross-section at the manhole entrance to provide additional shear strength. Dimensions of the flared cross-section must be larger than the corresponding manhole opening dimensions by no less than 12 inches in each direction. Perimeter of the duct bank opening in the underground structure must be flared toward the inside or keyed to provide a positive interlock between the duct bank and the wall of the structure. Use vibrators when this portion of the encasement is poured to assure a seal between the envelope and the wall of the structure.

3.6.9.2 Connections to Existing Underground Structures

For duct bank connections to existing structures, break the structure wall out to the dimensions required and preserve steel in the structure wall. Cut steel and extend into the duct bank envelope. Chip the perimeter surface of the duct bank opening to form a key or flared surface, providing a positive connection with the duct bank envelope.

3.6.9.3 Connections to Existing Ducts

Where connections to existing duct banks are indicated, excavate the banks to the maximum depth necessary. Cut off the banks and remove loose concrete from the conduits before new concrete-encased ducts are installed. Provide a reinforced concrete collar, poured monolithically with the new duct bank, to take the shear at the joint of the duct banks.

3.6.9.4 Partially Completed Duct Banks

During construction wherever a construction joint is necessary in a duct bank, prevent debris such as mud, and, and dirt from entering ducts by providing suitable conduit plugs. Fit concrete envelope of a partially completed duct bank with reinforcing steel extending a minimum of 2 feet back into the envelope and a minimum of 2 feet beyond the end of the envelope. Provide one No. 4 bar in each corner, 3 inches from the edge of the envelope. Secure corner bars with two No. 3 ties, spaced approximately one footapart. Restrain reinforcing assembly from moving during concrete pouring.

3.7 CABLE PULLING

Test existing duct lines with a mandrel and thoroughly swab out to remove foreign material before pulling cables. Pull cables down grade with the feed-in point at the manhole or buildings of the highest elevation. Use flexible cable feeds to convey cables through manhole opening and into duct runs. Do not exceed the specified cable bending radii when installing cable under any conditions, including turnups into switches, transformers, switchgear, switchboards, and other enclosures. Cable with tape shield must have a bending radius not less than 12 times the overall diameter of the completed cable. If basket-grip type cable-pulling devices are used to pull cable in place, cut off the section of cable under the grip before splicing and terminating.

3.7.1 Cable Lubricants

Use lubricants that are specifically recommended by the cable manufacturer for assisting in pulling jacketed cables.

3.8 CABLES IN UNDERGROUND STRUCTURES

Do not install cables utilizing the shortest path between penetrations, but route along those walls providing the longest route and the maximum spare cable lengths. Form cables to closely parallel walls, not to interfere with duct entrances, and support on brackets and cable insulators. Support cable splices in underground structures by racks on each side of the splice. Locate splices to prevent cyclic bending in the spliced sheath. Install cables at middle and bottom of cable racks, leaving top space open for future cables, except as otherwise indicated for existing installations. Provide one spare three-insulator rack arm for each cable

rack in each underground structure.

3.9 CONDUCTORS INSTALLED IN PARALLEL

Conductors must be grouped such that each conduit of a parallel run contains 1 Phase A conductor, 1 Phase B conductor, 1 Phase C conductor, and 1 neutral conductor.

3.10 LOW VOLTAGE CABLE SPLICING AND TERMINATING

Make terminations and splices with materials and methods as indicated or specified herein and as designated by the written instructions of the manufacturer. Do not allow the cables to be moved until after the splicing material has completely set. Make splices in underground distribution systems only in accessible locations such as manholes, handholes, or aboveground termination pedestals.

3.11 MEDIUM VOLTAGE CABLE TERMINATIONS

Make terminations in accordance with the written instruction of the termination kit manufacturer.

3.12 MEDIUM VOLTAGE CABLE JOINTS

Medium voltage cable joints are not allowed on this project.

3.13 CABLE END CAPS

Cable ends must be sealed at all times with coated heat shrinkable end caps. Cables ends must be sealed when the cable is delivered to the job site, while the cable is stored and during installation of the cable. The caps must remain in place until the cable is spliced or terminated. Sealing compounds and tape are not acceptable substitutes for heat shrinkable end caps. Cable which is not sealed in the specified manner at all times will be rejected.

3.14 GROUNDING SYSTEMS

NFPA 70 and IEEE C2, except provide grounding systems with a resistance to solid earth ground not exceeding 25 ohms.

3.14.1 Grounding Electrodes

Provide cone pointed driven ground rods driven full depth plus 12 inches, installed to provide an earth ground of the appropriate value for the particular equipment being grounded.
If the specified ground resistance is not met, an additional ground rod must be provided in accordance with the requirements of NFPA 70 (placed not less than 6 feet from the first rod). Should the resultant (combined) resistance exceed the specified resistance, measured not less than 48 hours after rainfall, notify the Contracting Officer immediately.

3.14.2 Grounding Connections

Make grounding connections which are buried or otherwise normally inaccessible, by exothermic weld or compression connector.

a. Make exothermic welds strictly in accordance with the weld manufacturer's written recommendations. Welds which are "puffed up" or

which show convex surfaces indicating improper cleaning are not acceptable. Mechanical connectors are not required at exothermic welds.

b. Make compression connections using a hydraulic compression tool to provide the correct circumferential pressure. Tools and dies must be as recommended by the manufacturer. An embossing die code or other standard method must provide visible indication that a connector has been adequately compressed on the ground wire.

3.14.3 Grounding Conductors

Provide bare grounding conductors, except where installed in conduit with associated phase conductors. Ground cable sheaths, cable shields, conduit, and equipment with No. 6 AWG. Ground other noncurrent-carrying metal parts and equipment frames of metal-enclosed equipment. Ground metallic frames and covers of handholes and pull boxes with a braided, copper ground strap with equivalent ampacity of No. 6 AWG.

3.14.4 Ground Cable Crossing Expansion Joints

Protect ground cables crossing expansion joints or similar separations in structures and pavements by use of approved devices or methods of installation which provide the necessary slack in the cable across the joint to permit movement. Use stranded or other approved flexible copper cable across such separations.

3.15 EXCAVATING, BACKFILLING, AND COMPACTING

Provide in accordance with NFPA 70 and Section 31 23 00.00 20 EXCAVATION AND FILL.

3.15.1 Reconditioning of Surfaces

3.15.1.1 Unpaved Surfaces

Restore to their original elevation and condition unpaved surfaces disturbed during installation of duct . Preserve sod and topsoil removed during excavation and reinstall after backfilling is completed. Replace sod that is damaged by sod of quality equal to that removed. When the surface is disturbed in a newly seeded area, re-seed the restored surface with the same quantity and formula of seed as that used in the original seeding, and provide topsoiling, fertilizing, liming, seeding, sodding, sprigging, or mulching.

3.15.1.2 Paving Repairs

Where trenches, pits, or other excavations are made in existing roadways and other areas of pavement where surface treatment of any kind exists , restore such surface treatment or pavement the same thickness and in the same kind as previously existed, except as otherwise specified, and to match and tie into the adjacent and surrounding existing surfaces.

3.16 CAST-IN-PLACE CONCRETE

Provide concrete in accordance with Section 03 30 00 CAST-IN-PLACE CONCRETE.

3.16.1 Concrete Slabs for Equipment

Unless otherwise indicated, the slab must be at least 8 inches thick,

reinforced with a 6 by 6 - W2.9 by W2.9 mesh, placed uniformly 4 inches from the top of the slab. Slab must be placed on a 6 inch thick, well-compacted gravel base. Top of concrete slab must be approximately 4 inches above finished grade with gradual slope for drainage. Edges above grade must have 1/2 inch chamfer. Slab must be of adequate size to project at least 8 inches beyond the equipment.

Stub up conduits, with bushings, 2 inches into cable wells in the concrete pad. Coordinate dimensions of cable wells with transformer cable training areas.

3.17 FIELD QUALITY CONTROL

3.17.1 Performance of Field Acceptance Checks and Tests

Perform in accordance with the manufacturer's recommendations, and include the following visual and mechanical inspections and electrical tests, performed in accordance with NETA ATS.

3.17.1.1 Medium Voltage Cables

Perform tests after installation of cable, splices, and terminators and before terminating to equipment or splicing to existing circuits.

a. Visual and Mechanical Inspection

(1) Inspect exposed cable sections for physical damage.

(2) Verify that cable is supplied and connected in accordance with contract plans and specifications.

(3) Inspect for proper shield grounding, cable support, and cable termination.

(4) Verify that cable bends are not less than ICEA or manufacturer's minimum allowable bending radius.

(5) Inspect for proper fireproofing.

(6) Visually inspect jacket and insulation condition.

(7) Inspect for proper phase identification and arrangement.

b. Electrical Tests

(1) Perform a shield continuity test on each power cable by ohmmeter method. Record ohmic value, resistance values in excess of 10 ohms per 1000 feet of cable must be investigated and justified.

(2) Perform acceptance test on new cables before the new cables are connected to existing cables and placed into service, including terminations and joints. Perform maintenance test on complete cable system after the new cables are connected to existing cables and placed into service, including existing cable, terminations, and joints. Tests must be very low frequency (VLF) alternating voltage withstand tests in accordance with IEEE 400.2. VLF test frequency must be 0.05 Hz minimum for a duration of 60 minutes using a sinusoidal waveform. Test voltages must be as follows:

CABLE RATING	AC TEST VOLTAGE for ACCEPTANCE TESTING
15 kV	20kV rms(peak)

CABLE RATING	AC TEST VOLTAGE for MAINTENANCE TESTING
15 kV	16kV rms(peak)

3.17.1.2 Low Voltage Cables, 600-Volt

Perform tests after installation of cable, splices and terminations and before terminating to equipment or splicing to existing circuits.

a. Visual and Mechanical Inspection

(1) Inspect exposed cable sections for physical damage.

(2) Verify that cable is supplied and connected in accordance with contract plans and specifications.

(3) Verify tightness of accessible bolted electrical connections.

(4) Inspect compression-applied connectors for correct cable match and indentation.

(5) Visually inspect jacket and insulation condition.

(6) Inspect for proper phase identification and arrangement.

b. Electrical Tests

(1) Perform insulation resistance tests on wiring No. 6 AWG and larger diameter using instrument which applies voltage of approximately 1000 volts dc for one minute.

(2) Perform continuity tests to insure correct cable connection.

3.17.1.3 Grounding System

a. Visual and mechanical inspection

Inspect ground system for compliance with contract plans and specifications

b. Electrical tests

Perform ground-impedance measurements utilizing the fall-of-potential method in accordance with IEEE 81. On systems consisting of interconnected ground rods, perform tests after interconnections are

complete. On systems consisting of a single ground rod perform tests before any wire is connected. Take measurements in normally dry weather, not less than 48 hours after rainfall. Use a portable megohmmeter tester in accordance with manufacturer's instructions to test each ground or group of grounds. The instrument must be equipped with a meter reading directly in ohms or fractions thereof to indicate the ground value of the ground rod or grounding systems under test.

3.17.2 Follow-Up Verification

Upon completion of acceptance checks and tests, show by demonstration in service that circuits and devices are in good operating condition and properly performing the intended function. As an exception to requirements stated elsewhere in the contract, the Contracting Officer must be given 5 working days advance notice of the dates and times of checking and testing.

-- End of Section --