GENERAL NOTES:

1. THESE DRAWINGS FORM A PART OF THE SPECIFICATIONS. REFER TO THE TECHNICAL SPECIFICATIONS FOR ADDITIONAL REQUIREMENTS.

2. ELEVATIONS AND SOUNDINGS ARE IN FEET BASED ON MEAN LOWER LOW WATER (MLLW) PROJECT DATUM FOR THE 1960–78 TIDAL EPOCH.

3. ALL DIMENSIONS, ELEVATIONS AND CONDITIONS SHALL BE VERIFIED IN THE FIELD. ANY DISCREPANCIES SHALL BE BROUGHT TO THE ATTENTION OF THE CONTRACTING OFFICER BEFORE ORDERING MATERIALS AND PROCEEDING WITH THE AFFECTED PART OF THE WORK.

4. CONTRACTOR SHALL MAINTAIN ADEQUATE SURVEY CONTROL AT ALL TIMES TO ESTABLISH AND MAINTAIN ALL LINES AND ELEVATIONS.

5. THE EXACT SIZE AND LOCATION OF ALL EXISTING UTILITIES SHALL BE FIELD VERIFIED BY THE CONTRACTOR. CONTRACTOR SHALL TAKE CARE TO PROTECT CRANE RAILS AND UTILITIES IN THE WORK AREA AND ALL CONSTRUCTION SHALL BE COORDINATED WITH THE CONTRACTING OFFICER.

6. HORIZONTAL CONTROL IS BASED ON TRANSVERSE MERCATOR MAINE WEST ZONE GRID. PNSY CONTROL POINT NO. DD–2A WAS HELD.

7. VERTICAL CONTROL IS BASED ON CONTROL POINT NO. BM–4, "CUT IN GRANITE STEP, SOUTH END OF EAST DOOR, BUILDING 91. ELEVATION 106.34"

8. SHORELINE FEATURES WERE SURVEYED BY CIVIL CONSULTANTS UNDER SUBCONTRACT TO APPLEDORE ENGINEERING, INC. IN JULY/AUGUST/SEPTEMBER 1998 AND CAN ONLY BE CONSIDERED AS INDICATING THE CONDITIONS EXISTING AT THAT TIME. ADDITIONAL SITE INFORMATION BASED ON SEPTEMBER/OCTOBER 1997 SURVEY BY DOUCET SURVEY, INC.

9. IT IS THE CONTRACTOR'S RESPONSIBILITY TO DETERMINE ERECTION PROCEDURES AND SEQUENCE TO ENSURE THE SAFETY OF THE FACILITIES AND THEIR COMPONENTS DURING DEMOLITION AND ERECTION. THIS INCLUDES THE ADDITION OF NECESSARY SHORING, SHEETING, TEMPORARY BRACING, GUYS OR TIEDOWNS. SUCH MATERIAL SHALL REMAIN THE PROPERTY OF THE CONTRACTOR AFTER COMPLETION OF THE PROJECT. ALL PROPOSED STAGING AREAS SHALL BE COORDINATED WITH THE CONTRACTING OFFICER BEFORE STARTING WORK.

10. METHODS OF DEMOLITION, CONSTRUCTION, AND ERECTION ARE THE CONTRACTOR'S RESPONSIBILITY UNLESS OTHERWISE SPECIFIED.

11. IT IS THE CONTRACTOR'S RESPONSIBILITY TO COORDINATE ALL SITE WORK WITH FACILITY PERSONNEL ON A DAILY BASIS.

12. DIMENSIONS AND DETAILS OF THE EXISTING CONSTRUCTION ARE FROM CONSTRUCTION DRAWINGS FURNISHED BY THE GOVERNMENT. ALL DIMENSIONS AND DETAILS OF THE EXISTING CONSTRUCTION SHALL BE CHECKED AND VERIFIED IN THE FIELD BY THE CONTRACTOR.

13. IT IS THE CONTRACTOR'S RESPONSIBILITY TO PROVIDE AND MAINTAIN ENVIRONMENTAL CONTROLS AS REQUIRED BY FEDERAL, STATE, AND MUNICIPAL REGULATIONS AND PERMITS. ENVIRONMENTAL CONTROLS SHALL INCLUDE BUT NOT BE LIMITED TO TURBIDITY AND DUST.

14. ALL APPLICABLE FEDERAL, STATE, AND MUNICIPAL REGULATIONS AND PERMITS SHALL BE FOLLOWED, INCLUDING THE FEDERAL DEPARTMENT OF LABOR, SAFETY, HEALTH ACT, U.S. ARMY CORPS OF ENGINEERS, AND STATE/LOCAL WETLANDS CONTROL.

15. THE GOVERNMENT MAY CHARGE TO THE CONTRACTOR ANY ADDITIONAL COST OF INSPECTION OR TEST WHEN PRIOR REJECTION MAKES REINSPECTION OR RETEST NECESSARY.

16. DEEP DRAFT CAMELS AND BARGES WILL BE RELOCATED BY THE GOVERNMENT TO FACILITATE WATERFRONT WORK. IT IS THE CONTRACTOR'S RESPONSIBILTY TO INFORM THE GOVERNMENT OF THE CONSTRUCTION SCHEDULE PRIOR TO COMMENCEMENT OF CONSTRUCTION.

17. THE CRANE RAILS CAN EACH SUPPORT 15 KIPS PER LINEAR FOOT AND MAY BE USED TO SUPPORT CRANES AND OTHER HEAVY EQUIPMENT PROVIDED THAT CRANE MATS ARE USED AND THE RAILS ARE NOT GOUGED OR OTHERWISE DAMAGED.

18. MEASURES SHALL BE TAKEN TO PREVENT ANY DEBRIS, WELD SLAG AND WASTE WATERS FROM ENTERING THE STORM DRAIN OR RIVER.

ALLOWABLE WHARF LOADS:

BERTHS 11:

A. CONCRETE DECK

UNIFORM LIVE LOAD.....500 PSF
TRUCK LOAD.....HS–20

B. TIMBER DECK

UNIFORM LIVE LOAD.....100 PSF
CONCENTRATED LIVE LOAD.....300 LB

STRUCTURAL STEEL NOTES:

1. STRUCTURAL STEEL CONSTRUCTION SHALL CONFORM TO THE LATEST EDITION OF THE STRUCTURAL CONSTRUCTION MANUAL OF THE AMERICAN INSTITUTE OF STEEL CONSTRUCTION.

2. ALL ABOVE WATER WELDING SHALL BE IN ACCORDANCE WITH THE REQUIREMENTS OF THE STRUCTURAL WELDING CODE, D1.1, OF THE AMERICAN WELDING SOCIETY (AWS). WHERE ABOVE WATER STEEL COATINGS ARE REMOVED TO APPLY WELDS, THE COATING SHALL BE RE–APPLIED TO THE STEEL INCLUDING THE WELD AREA.

3. ALL UNDERWATER WELDING SHALL BE IN ACCORDANCE WITH THE REQUIREMENTS OF THE STRUCTURAL WELDING CODE, D3.6M, OF THE AMERICAN WELDING SOCIETY (AWS). DO NOT RE–APPLY STEEL COATING TO UNDERWATER WELDS.

4. THE CONTRACTOR SHALL SUBMIT DETAILED SHOP DRAWINGS TO CONTRACTING OFFICER FOR REVIEW AND APPROVAL PRIOR TO THE FABRICATION OR DELIVERY OF ANY STEEL.

GENERAL DEMOLITION NOTES:

1. DEMOLITION SHALL BE CONDUCTED TO PREVENT DEBRIS FROM FALLING INTO THE RIVER. UNDERWATER INSPECTIONS MAY BE CONDUCTED BY THE GOVERNMENT TO ENSURE THE CONTRACTOR REMOVES ALL DEMOLITION AND CONSTRUCTION DEBRIS FROM THE RIVER.

2. THE CONTRACTOR SHALL PROVIDE CONTROL MEASURES AS REQUIRED BY ENVIRONMENTAL REGULATIONS AND AS REQUIRED TO PREVENT DEBRIS FROM ENTERING THE RIVER.

3. THE CONTRACTOR SHALL OBTAIN, ON A DAILY BASIS, A BURNING PERMIT FROM THE PORTSMOUTH NAVAL SHIPYARD FIRE DEPARTMENT FOR ALL GRINDING, WELDING, OR TORCH CUTTING WORK.

4. REMOVE MARINE GROWTH AND OTHER BOND INHIBITING SUBSTANCES FROM ALL SURFACES IN CONTACT WITH REPAIR WORK UTILIZING LOW–PRESSURE PRESSURE WASHING EQUIPMENT.

TIMBER NOTES:

1. ALL TIMBER CHOCKS, WALES, AND SPLICES SHALL BE FULL DIMENSION NO. 2 SOUTHERN PINE OR DOUGLAS FIR–LARCH. DOUGLAS FIR–LARCH SHALL BE TREATED WITH 2.5 LBS OF AZCA AND SOUTHERN PINE SHALL BE TREATED WITH 2.5 LBS OF CCA.

2. TIMBER FENDER PILES SHALL BE SOUTHERN PINE OR DOUGLAS FIR–LARCH TREATED WITH 1.5 LBS OF CCA OR AZCA, RESPECTIVELY.

3. FASTENERS SHALL BE GALVANIZED IN ACCORDANCE WITH THE SPECIFICATIONS.

4. FIELD TREAT ALL CUT AND DRILLED TIMBER SURFACES WITH SEVERAL COATS OF THE SAME PRESERVATIVE USED TO TREAT THE TIMBER OR COPPER NAPHTHENATE SOLUTION IN ACCORDANCE WITH AWPA M4. TAKE PRECAUTIONS TO AVOID SPILLS.

5. COUNTERSINK OUTSIDE FACE OF TIMBERS AT ALL FASTENER LOCATIONS.

6. ALL TIMBER AND PILE REPLACEMENT BOLTED CONNECTIONS SHALL USE OGEE WASHERS AT BOTH ENDS.

7. BOLTS IN TIMBER:

BOLT SIZE	TORQUE
1" DIA. BOLT WITH 4" DIA. OGEE WASHERS	85 FT–LBS.
1–1/4" DIA. BOLT WITH 4" DIA. OGEE WASHERS	125 FT–LBS.

CONCRETE DETERIORATION REPAIR NOTES:

1. REPAIR MATERIALS SHALL INCLUDE THE FOLLOWING IN ACCORDANCE WITH SECTION 03931.
   a. FOR REPAIRS LESS THAN 1 INCH DEEP, CONTRACTOR SHALL TROWEL ON A PROPRIETARY PREMIX.
   b. FOR REPAIRS GREATER THAN 1 INCH DEEP, CONTRACTOR MAY USE EITHER A PROPRIETARY PREMIX OR CONCRETE.
   c. FOR REPAIRS GREATER THAN 1 INCH DEEP, REPAIR MATERIALS MAY BE PLACED USING EITHER A FORM AND PUMP OR A FORM AND POUR METHOD.
2. REPAIR MATERIALS SHALL CONFORM WITH THE FOLLOWING IN ACCORDANCE WITH SECTION 03931.
   a. CONCRETE – CONFORM TO MAINE DEPARTMENT OF TRANSPORTATION SPECIFICATIONS SECTION 502 CLASS A METHOD B.
   b. PROPRIETARY PREMIX – SUITABLE FOR A FREEZE/THAW MARINE ENVIRONMENT.
3. ALL CONCRETE REPAIRS SHALL INCLUDE A LITHIUM NITRATE BASED SURFACE TREATMENT AND A LITHIUM NITRATE BASED ADMIXTURE IN ACCORDANCE WITH SECTION 030132.

CONCRETE DETERIORATION REPAIR NOTES (CONTINUED):

4. ALL REPAIR MATERIALS SHALL BE PLACED IN DEWATERED CONDITIONS.

5. CONTRACTOR SHALL SUBMIT DETAILED REINFORCING DRAWINGS INCLUDING BAR AND BENDING SCHEDULES TO CONTRACTING OFFICER FOR REVIEW AND APPROVAL PRIOR TO DELIVERY OF REINFORCING STEEL.

6. EXISTING CONCRETE REMOVAL AND SURFACE PREPARATION SHALL BE IN ACCORDANCE WITH SPECIFICATIONS SECTION 030132.

7. CONTRACTOR SHALL PAY SPECIAL ATTENTION TO SURFACE PREPARATION TO ENSURE A DURABLE BOND BETWEEN EXISTING CONCRETE AND REPAIR MATERIAL. IF CONCRETE REMOVAL TO SOUND CONCRETE IS PERFORMED USING IMPACT EQUIPMENT, FINAL REMOVAL SHALL BE PERFORMED BY LIGHT CHIPPING, ABRASIVE BLASTING OR HIGH–PRESSURE WATER JETTING. THIS IS REQUIRED TO REMOVE SMALL–SCALE CRACKING CAUSED BY IMPACT REMOVAL. CONTRACTOR SHALL DEMONSTRATE ALL PROPOSED REMOVAL METHODS ON ALL REQUIRED TEST PANELS FOR APPROVAL. WASTE WATER SHALL BE COLLECTED FOR PROPER DISPOSAL.

8. BLAST CLEANING SHALL ALSO BE PERFORMED AS A FINAL SURFACE PREPARATION NOT MORE THAN 36 HOURS BEFORE REPAIR CONCRETE PLACEMENT. ALL DEBRIS FROM THE CLEANING OPERATION SHALL BE THOROUGHLY REMOVED FROM THE CLEANED SURFACES AND ADJACENT AREAS USING COMPRESSED, DRY AIR PRIOR TO THE APPLICATION OF REPAIR MATERIALS. ALL AIR COMPRESSOR LINES SHALL BE EQUIPPED WITH EFFECTIVE OIL TRAPS. DEBRIS SHALL BE PICKED UP IMMEDIATELY FOR PROPER DISPOSAL.

9. REINFORCING STEEL SHALL CONFORM TO ASTM A615 GRADE 60.

10. REINFORCING STEEL MINIMUM CLEAR COVER SHALL MATCH EXISTING, BUT BE NO LESS THAN 2 INCHES.

11. CHAMFER ALL EXPOSED CONCRETE EDGES 1 INCH.

12. ALL OTHER WORK REQUIRED TO PREPARE, PLACE AND CURE REPAIR MATERIALS SHALL BE IN ACCORDANCE WITH SECTION 030132.

13. ALL FORMWORK SHALL BE LEFT IN PLACE AND PREMIX AND OR CONCRETE SURFACE SHALL BE COVERED AND KEPT MOIST FOR A PERIOD OF NOT LESS THAN SEVEN (7) FULL DAYS AFTER PLACEMENT.

14. CONTRACTOR IS NOT ALLOWED TO SUPPORT FORMWORK FOR CONCRETE REPAIRS FROM THE REINFORCED CONCRETE DECK.

15. FOLLOWING THE CONCRETE REMOVAL OPERATIONS THAT EXPOSE THE EMBEDDED STEEL BEAM(S), INSPECT THE STEEL BEAM(S) FOR DETERIORATION. NOTIFY THE CONTRACTING OFFICER OF SECTION LOSSES BEFORE PROGRESSING WITH CONCRETE REPAIR WORK.

A

REPAIR QUANTITIES FOR BIDDING PURPOSES

REPAIR TYPE		UNIT	QUANTITY: BENT LYK TO BENT 25	QUANTITY: BENT 25 TO BENT D'
PILE JACKETS	STRUCTURAL JACKET	EA	4	0
	NON–STRUCTURAL JACKET	EA	3	6
CONCRETE FRAMING DETERIORATION	IMMINENT SPALL (AVG 4" DEPTH)	SF	3400*	1200*
	SPALL (AVG. 6" DEPTH)	SF	1500* =3892	500* =1825
REINFORCING STEEL CORROSION	STIRRUP TYPE A	LBS	350*	50*
	STIRRUP TYPE B	LBS	100*	200*
CONCRETE DECK DETERIORATION	RAIL POCKET	LF	420*	120*
	DECK	SF	180*	0
FENDER SYSTEM DETERIORATION	REPLACE FENDER SYSTEM (BENT Q TO 12)	LF	370	0
	REPAIR LOW WATER WALE (BENT F TO G)	LF	15	0
	REPLACE RUBSTRIP (BENT 24.7)	EA	1	0
	RELOCATE UTILITIES (ATTACHED TO WALE)	LF	400	0
EXPOSED PILES BELOW WATER	INSTALL ANODES	EA	62	95

* REPAIR QUANTITIES HAVE BEEN INCREASED FOR BIDDING PURPOSES TO ACCOUNT FOR ADDITIONAL DETERIORATION IDENTIFIED DURING CONSTRUCTION.

GOVERNMENT APPROVES ADDITIONAL 132 LF OF CRANE RAIL POCKET AND SPALL REPAIR PER RFI#018

Appledore Marine Engineering Inc.
800 STATE STREET, SUITE E
PORTSMOUTH, NEW HAMPSHIRE 03801
(603) 766–1870 amel@appledoremarine.com

SYM	DESCRIPTION	DATE	APPR
A	REVISED BID QUANTITIES	1/08	NPL

SEAL

SUBMITTED BY:
A/E FIRM NAME AND ADDRESS: APPLEDORE MARINE ENGINEERING, INC. 800 STATE STREET, SUITE E PORTSMOUTH NH, 03801
DSGN: CBS DRWN: GBS CHK: RMS
SUPV: CBS
PRJMGR. NJE | CIV. STR.
MECH. | ARCH.
ELEC.
SUBMITTED BY: V.P. 01/15/08
(SIGNED) (TITLE) (DATE)

APPROVALS:
APPROVED:
(CUSTOMER) (CODE) (DATE)
PROJECT MANAGER:
FIRE PROTECTION:
SPV. ENG.–ARCH:
SPV. ENG.–CIVIL:
SPV. ENG.–ELEC:
SPV. ENG.–MECH:
CI – PM & E:
APPROVED:
TEAD PWD–ME DATE

DEPARTMENT OF THE NAVY ~ NAVAL FACILITIES ENGINEERING COMMAND ~ NAVAL FACILITIES ENGINEERING COMMAND – NORFOLK, VIRGINIA
IPT PORTSMOUTH NAVAL SHIPYARD NAVAL STATION – KITTERY, ME.

MISCELLANEOUS REPAIRS TO BERTH 11 - TASK 10
GENERAL NOTES

CODE ID. NO. 80091 SIZE D
SCALE:
MAXIMO No.: XR7CR
JOB ORDER No.: N/A
SPEC. NO. 04–08–2513
CONSTR. CONTR. NO. N40085–08–C–2513
NAVFAC DRAWING NO. 12513392
SHEET 3 OF 26
SHEET NO. G3 PW–ME DRAWING NO. FP2–08–537

DRAWFORM REVISION: 11 APRIL 2007

FILE NAME: R:\TP–104A PNSY Lifting Study\11 Reference Information\2009 Berth 11 Repair Drawings\N40085–08–C–2513 ASBUILT DWGS\FP2–537.dwg LAYOUT NAME: Layout1 PLOTTED: Friday, December 12, 2014 – 8:27am

UNCLASSIFIED

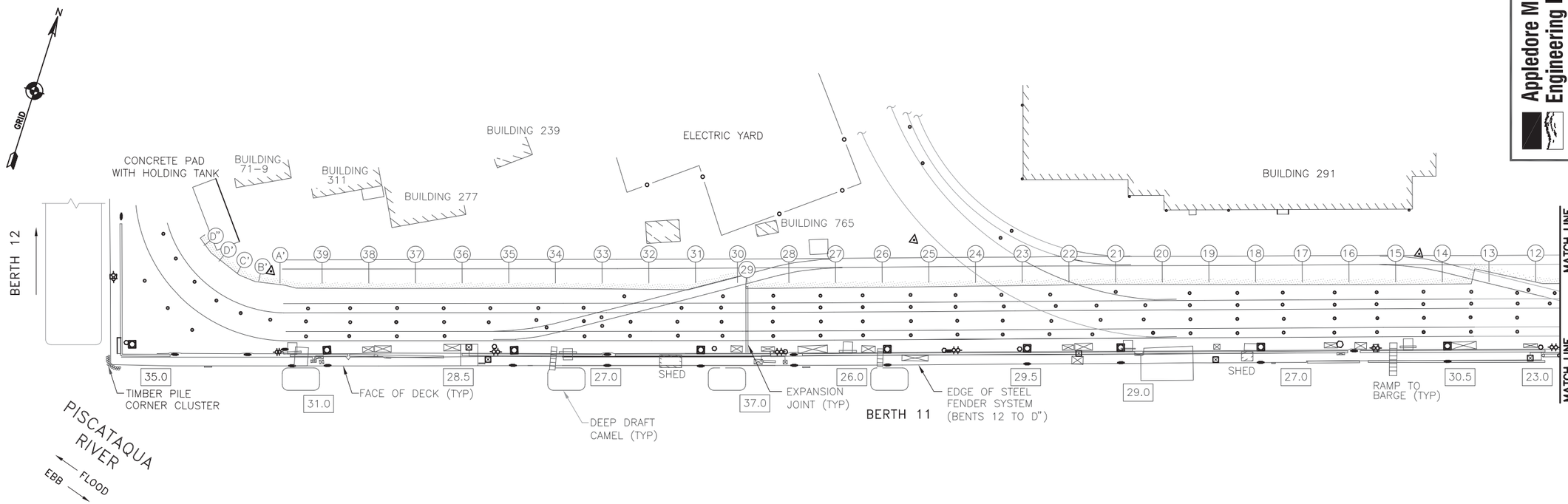

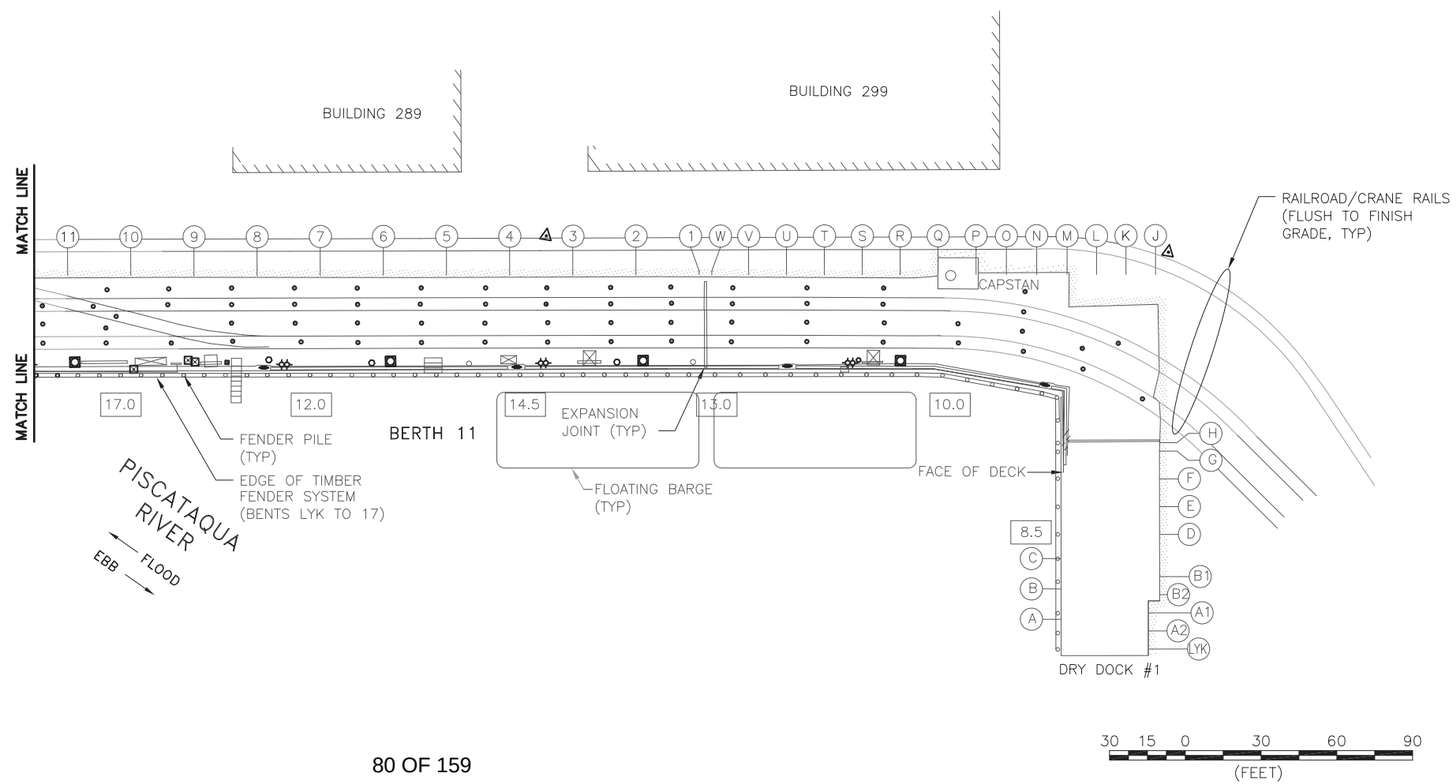

LEGEND:

- BOLLARD
- CLEAT
- BRONZE DISK
- DECK DRAIN (EXAGGERATED SIZE)
- UTILITIES
- (37) PILE BENT DESIGNATION
- CHAINLINK FENCE
- BUILDING
- EDGE OF BITUMINOUS PAVEMENT
- MISCELLANEOUS STRUCTURE
- [35.0] WATER DEPTH ALONG WHARF IN FEET (MLLW)

NOTES:

1. DRAWING BASED ON TOPOGRAPHIC FIELD SURVEY COMPLETED BY CIVIL CONSULTANTS IN JULY, AUGUST AND SEPTEMBER 1998. DRAWING INDICATES CONDITIONS AT THE TIME OF SURVEY. CONDITION AT TIME OF CONSTRUCTION MAY DIFFER.
2. LOCATION OF DEEP DRAFT CAMELS AND BARGES TO REPRESENT CONDITIONS AT THE TIME OF THE SURVEY. CAMELS AND BARGES MAY BE LOCATED IN DIFFERENT LOCATIONS AT THE TIME OF CONSTRUCTION.
3. SEE SHEETS C5 THRU C7 FOR UNDER DECK AND WALKWAY UTILITIES.

Appledore Marine Engineering Inc.
800 STATE STREET, SUITE E
PORTSMOUTH, NEW HAMPSHIRE 03801
(603) 766-1870 amei@appledoremarine.com

SYM	DESCRIPTION	DATE	APPR

NAVFAC

SEAL

SUBMITTED BY:
A/E FIRM NAME AND ADDRESS: APPLEDORE MARINE ENGINEERING, INC. 800 STATE STREET, SUITE E PORTSMOUTH NH, 03801
DSGN: CBS DRWN: GBS CHK: RMS
SUPV: CBS
PRJMGR. NJE CIV. STR.
MECH. ARCH.
ELEC.
SUBMITTED BY: V.P. 01/15/08
(SIGNED) (TITLE) (DATE)
APPROVALS:
APPROVED:
(CUSTOMER) (CODE) (DATE)
PROJECT MANAGER:
FIRE PROTECTION:
SPV. ENG.-ARCH:
SPV. ENG.-CIVIL:
SPV. ENG.-ELEC:
SPV. ENG.-MECH:
CI - PM & E:
APPROVED:
TEAD PWD-ME DATE

DEPARTMENT OF THE NAVY
NAVAL FACILITIES ENGINEERING COMMAND
~ NAVAL FACILITIES ENGINEERING COMMAND ~
NAVAL STATION - NORFOLK, VIRGINIA
PT PORTSMOUTH NAVAL SHIPYARD KITTERY, ME.

MISCELLANEOUS REPAIRS TO BERTH 11 - TASK 10
EXISTING PLAN

CODE ID. NO. 80091 SIZE D
SCALE:
MAXIMO No.: XR7CR
JOB ORDER No.: N/A
SPEC. NO. 04-08-2513
CONSTR. CONTR. NO. N40085-08-C-2513
NAVFAC DRAWING NO. 12513393
SHEET 4 OF 26
SHEET NO. C1 PW-ME DRAWING NO. FP2-08-538

DRAWFORM REVISION: 11 APRIL 2007

FILE NAME: R:\TP-104A PNSY Lifting Study\11 Reference Information\2009 Berth 11 Repair Drawings\N40085-08-C-2513 ASBUILT DWGS\FP2-538.dwg LAYOUT NAME: Layout1 PLOTTED: Friday, December 12, 2014 - 8:28am

UNCLASSIFIED

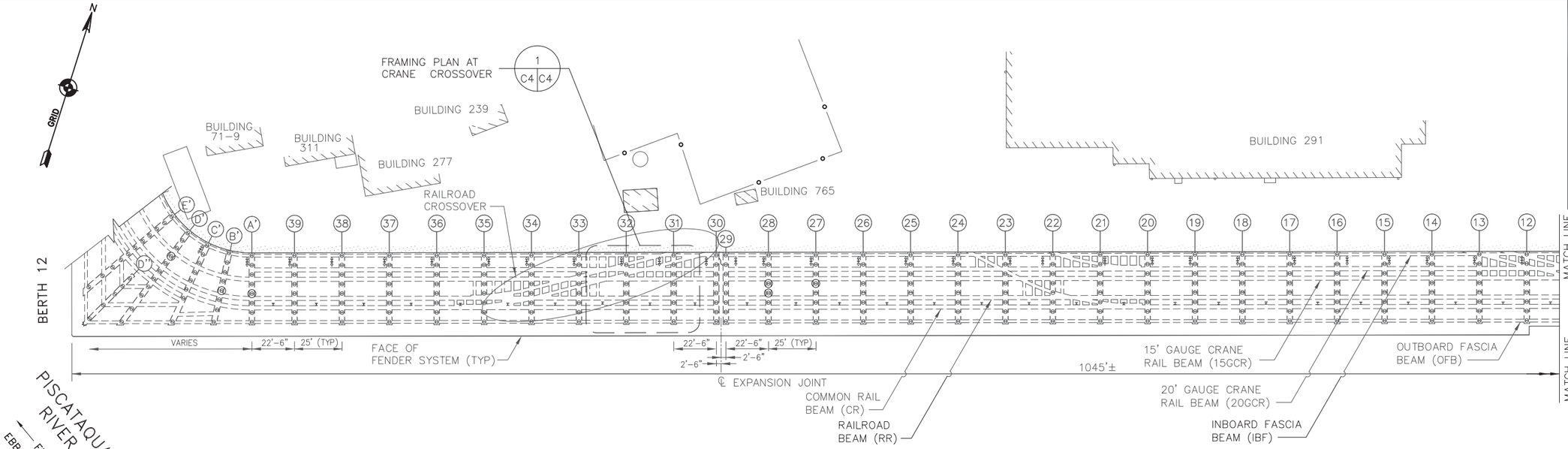

BERTH 11 PLAN

30 15 0 30 60 90
(FEET)

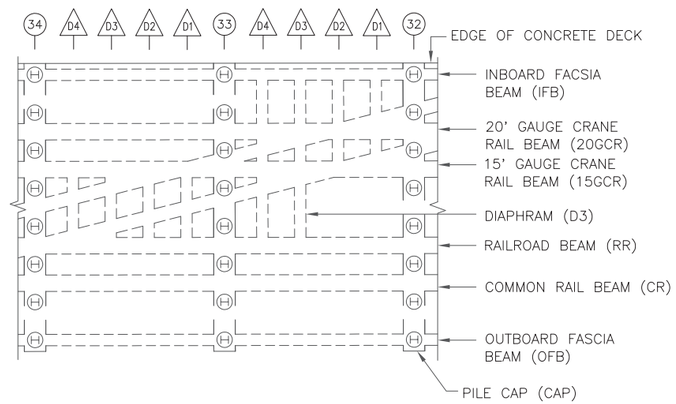

FRAMING PLAN AT CRANE CROSSOVER

A
C4 C4

10 5 0 10 20 30
(FEET)

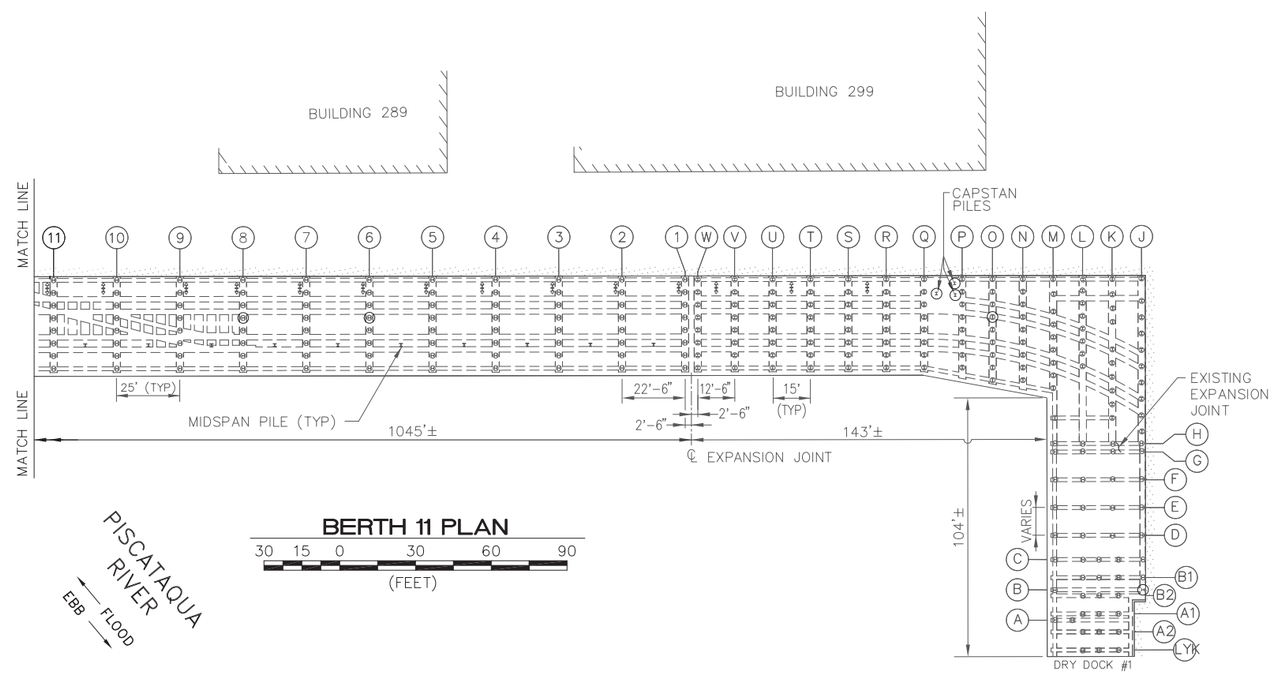

BERTH 11 PLAN

30 15 0 30 60 90
(FEET)

LEGEND:

- 34 — PILE BENT LOCATION
- D1 — TRANSVERSE BEAM (DIAPHRAGM)
- CHAINLINK FENCE
- BUILDING
- BITUMINOUS PAVEMENT
- WHARF SUPPORT PILE IN CONCRETE JACKET
- CONCRETE ENCASED STEEL BEAM
- VERTICAL STEEEL H-PILE
- PAIR OF BATTER STEEL H-PILES
- PILE TO BE JACKETED – SEE SHEET S1

NOTES:

1. FRAMING SHOWN IS BASED ON GOVERNMENT ARCHIVE DRAWINGS. CONTRACTOR SHALL FIELD VERIFY AS NEEDED.
2. DEEP DRAFT CAMELS AND FLOATING BARGES NOT SHOWN.

Appledore Marine Engineering Inc.
800 STATE STREET, SUITE E
PORTSMOUTH, NEW HAMPSHIRE 03801
(603) 766-1870 amel@appledoremarine.com

SYM	DESCRIPTION	DATE	APPR

SEAL

SUBMITTED BY:
A/E FIRM NAME AND ADDRESS: APPLEDORE MARINE ENGINEERING, INC. 800 STATE STREET, SUITE E PORTSMOUTH NH, 03801
DSGN: CBS DRWN: GBS CHK: RMS
SUPV: CBS
PRJMGR. NJE CIV. STR.
MECH. ARCH.
ELEC.
SUBMITTED BY: V.P. 01/15/08
(SIGNED) (TITLE) (DATE)

APPROVALS:
APPROVED:
(CUSTOMER) (CODE) (DATE)
PROJECT MANAGER:
FIRE PROTECTION:
SPV. ENG.-ARCH:
SPV. ENG.-CIVIL:
SPV. ENG.-ELEC:
SPV. ENG.-MECH:
CI – PM & E:
APPROVED:
FEAD PWD-ME DATE

DEPARTMENT OF THE NAVY
NAVAL FACILITIES ENGINEERING COMMAND
~ NAVAL FACILITIES ENGINEERING COMMAND ~
NAVAL STATION – NORFOLK, VIRGINIA
IPT PORTSMOUTH NAVAL SHIPYARD KITTERY, ME.

MISCELLANEOUS REPAIRS TO BERTH 11 - TASK 10

EXISTING PILE AND FRAMING PLAN

CODE ID. NO. 80091 SIZE D
SCALE:
MAXIMO No.: XR7CR
JOB ORDER No.: N/A
SPEC. NO. 04-08-2513
CONSTR. CONTR. NO. N40085-08-C-2513
NAVFAC DRAWING NO. 12513394
SHEET 5 OF 26
SHEET NO. C2 PW-ME DRAWING NO. FP-08-539

DRAWFORM REVISION: 11 APRIL 2007

FILE NAME: R:\TP-104A PNSY Lifting Study\11 Reference Information\2009 Berth 11 Repair Drawings\N40085-08-C-2513 ASBUILT DWGS\FP2-539.dwg LAYOUT NAME: Layout1 PLOTTED: Friday, December 12, 2014 – 8:29am

UNCLASSIFIED

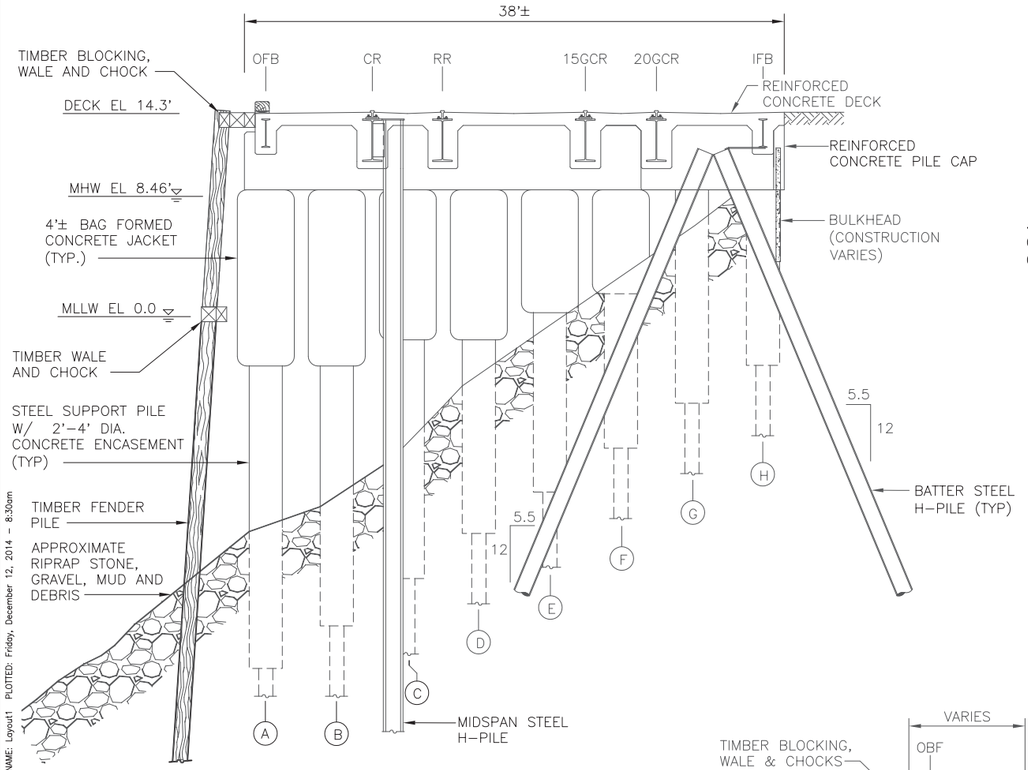

SECTION
BENTS Q TO 11
4 2 0 8 16
(FEET)

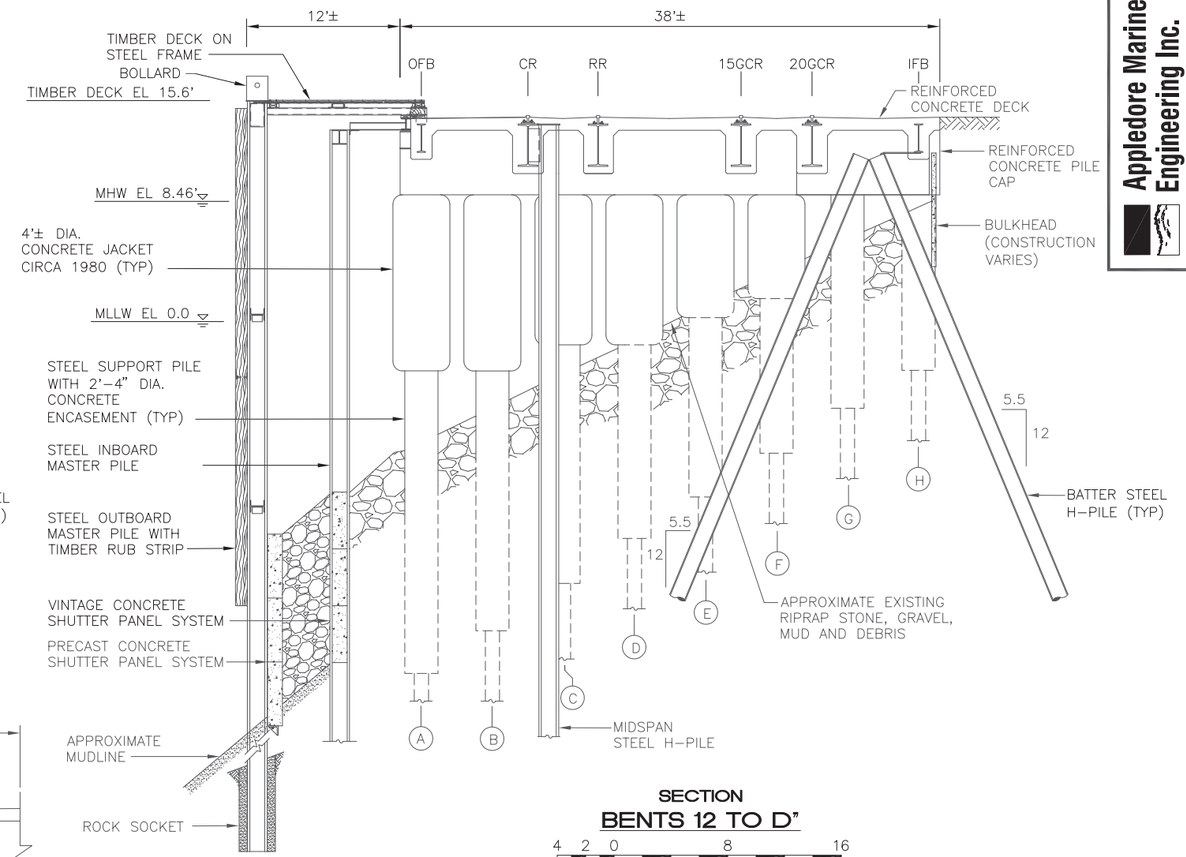

SECTION
BENTS 12 TO D"
4 2 0 8 16
(FEET)

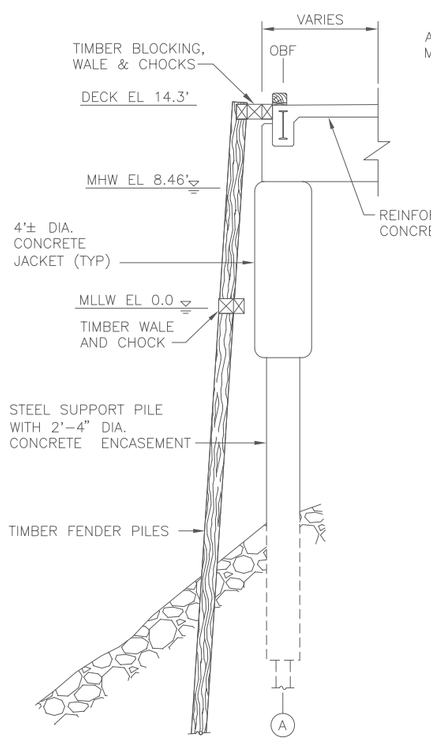

SECTION
BENTS LYK TO P
4 2 0 8 16
(FEET)

LEGEND:

(A)	PILE DESIGNATION
OFB	OUTBOARD FASCIA BEAM (24WF74)
CR	COMMON RAIL BEAM (36WF230)
RR	RAILROAD BEAM (36WF230)
15GCR	15' GUAGE CRANE RAIL BEAM (36WF230)
20GCR	20' GUAGE CRANE RAIL BEAM (36WF230)
IFB	INBOARD FASCIA BEAM (24WF74)

NOTES:

1. SECTIONS BASED ON PORTSMOUTH NAVAL SHIPYARD PUBLIC WORKS ARCHIVE DRAWINGS AND LIMITED FIELD INVESTIGATION.
2. SEE SHEETS C5 THRU C7 FOR UNDER DECK AND WALKWAY UTILITIES.
3. THERE IS SUBSTANTIAL CONSTRUCTION DEBRIS ALONG THE MUDLINE IN FRONT OF AND BEHIND THE CONCRETE SHUTTER PANELS. DEBRIS INCLUDES BUT IS NOT LIMITED TO: TIMBERS, ELECTRICAL CABLES, STAGING, BOULDERS AND MISCELLANEOUS METALS.
4. TIMBER IS CREOSOTE AND CCA TREATED.
5. DECK DRAINS NOT SHOWN.

Appledore Marine Engineering Inc.
800 STATE STREET, SUITE E
PORTSMOUTH, NEW HAMPSHIRE 03801
(603) 766-1870 amel@appledoremarine.com

MLS	STM	DESCRIPTION	DATE	APPR

NAVFAC

SEAL

SUBMITTED BY:
A/E FIRM NAME AND ADDRESS: APPLEDORE MARINE ENGINEERING, INC. 800 STATE STREET, SUITE E PORTSMOUTH NH, 03801
DSGN: CBS DRWN: GBS CHK: RMS
SUPV: CBS
PRJMGR. NJE CIV. STR.
MECH. ARCH.
ELEC.
SUBMITTED BY: V.P. 01/15/08
(SIGNED) (TITLE) (DATE)
APPROVALS:
APPROVED:
(CUSTOMER) (CODE) (DATE)
PROJECT MANAGER:
FIRE PROTECTION:
SPV. ENG.-ARCH:
SPV. ENG.-CIVIL:
SPV. ENG.-ELEC:
SPV. ENG.-MECH:
CI - PM & E:
APPROVED:
TEAD PWD-ME DATE

DEPARTMENT OF THE NAVY
~ NAVAL FACILITIES ENGINEERING COMMAND ~
NAVAL FACILITIES ENGINEERING COMMAND
NAVAL STATION - NORFOLK, VIRGINIA
IPT PORTSMOUTH NAVAL SHIPYARD KITTERY, ME.

MISCELLANEOUS REPAIRS TO BERTH 11 - TASK 10 EXISTING SECTIONS

CODE ID. NO. 80091 SIZE D
SCALE:
MAXIMO No.: XR7CR
JOB ORDER No.: N/A
SPEC. NO. 04-08-2513
CONSTR. CONTR. NO. N40085-08-C-2513
NAVFAC DRAWING NO. 12513395
SHEET 6 OF 26
SHEET NO. C3 PW-ME DRAWING NO. FP2-08-540

DRAWFORM REVISION: 11 APRIL 2007

FILE NAME: R:\TP-104A PNSY Lifting Study\11 Reference Information\2009 Berth 11 Repair Drawings\N40085-08-C-2513 ASBUILT DWGS\FP2-540.dwg LAYOUT NAME: Layout1 PLOTTED: Friday, December 12, 2014 - 8:30am

UNCLASSIFIED

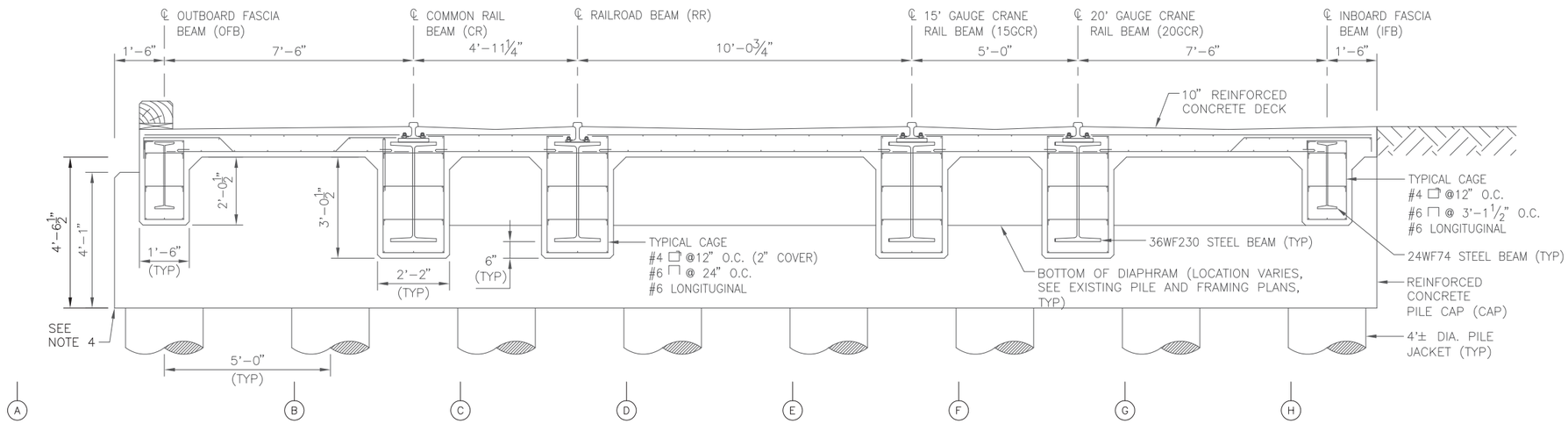

SECTION
SUPERSTRUCTURE

2 1 0 2 4 6
(FEET)

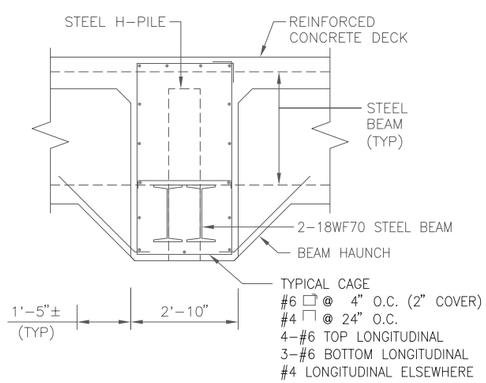

SECTION
TYPICAL CAP

N.T.S.

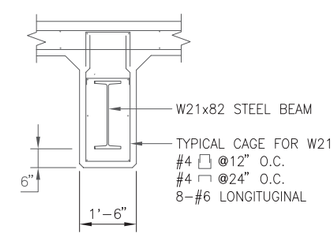

SECTION
TYPICAL DIAPHRAGM BEAM

N.T.S.

NOTES:

1. DRAWING SHOWS TYPICAL CONSTRUCTION AND DOES NOT REFLECT REPAIRS OR MODIFICATIONS.
2. TIMBER DECK, FENDER SYSTEM, AND UTILITIES NOT SHOWN.
3. SEE SHEETS C5 THRU C7 FOR UNDER DECK AND WALKWAY UTILITIES.
4. THE OUTBOARD FACE OF THE PILE CAP IS DESIGNATED AS "NOSE" IN REPAIR SCHEDULES.
5. DECK DRAINS NOT SHOWN.

Appledore Marine Engineering Inc.
800 STATE STREET, SUITE E
PORTSMOUTH, NEW HAMPSHIRE 03801
(603) 766-1870 amel@appledoremarine.com

SYM	DESCRIPTION	DATE	APPR

NAVFAC

SEAL

SUBMITTED BY:
A/E FIRM NAME AND ADDRESS: APPLEDORE MARINE ENGINEERING, INC. 800 STATE STREET, SUITE E PORTSMOUTH NH, 03801
DSGN: CBS DRWN: GBS CHK: RMS
SUPV: CBS
PRJMGR. NJE CIV. STR.
MECH. ARCH.
ELEC.
SUBMITTED BY: V.P. 01/15/08
(SIGNED) (TITLE) (DATE)
APPROVALS:
APPROVED:
(CUSTOMER) (CODE) (DATE)
PROJECT MANAGER:
FIRE PROTECTION:
SPV. ENG.-ARCH:
SPV. ENG.-CIVIL:
SPV. ENG.-ELEC:
SPV. ENG.-MECH:
CI - PM & E:
APPROVED:
TEAD PWD-ME DATE

DEPARTMENT OF THE NAVY
~ NAVAL FACILITIES ENGINEERING COMMAND ~
NAVAL FACILITIES ENGINEERING COMMAND
NAVAL STATION - NORFOLK, VIRGINIA
PT PORTSMOUTH NAVAL SHIPYARD KITTERY, ME.

MISCELLANEOUS REPAIRS TO BERTH 11 - TASK 10
EXISTING FRAMING DETAILS

CODE ID. NO. 80091 SIZE D
SCALE:
MAXIMO No.: XR7CR
JOB ORDER No.: N/A
SPEC. NO. 02-08-2513
CONSTR. CONTR. NO. N40085-08-C-2513
NAVFAC DRAWING NO. 12513396
SHEET 7 OF 26
SHEET NO. C4 PW-ME DRAWING NO. FP2-08-541

DRAWFORM REVISION: 11 APRIL 2007

FILE NAME: R:\TP-104A PNSY Lifting Study\11 Reference Information\2009 Berth 11 Repair Drawings\N40085-08-C-2513 ASBUILT DWGS\FP2-541.DWG LAYOUT NAME: Layout1 PLOTTED: Friday, December 12, 2014 - 8:31am

UNCLASSIFIED

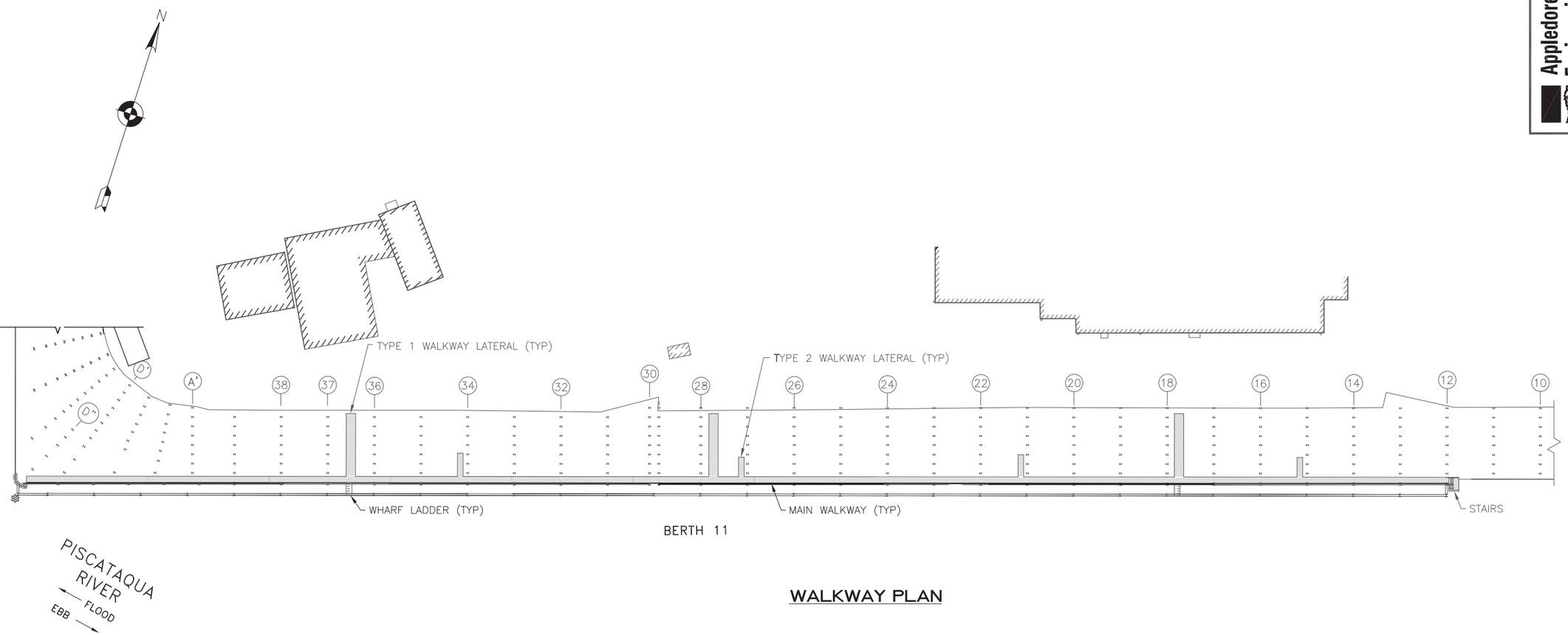

WALKWAY PLAN

LEGEND:

(18) BENT DESIGNATION

NOTES:

1. PLAN BASED ON ARCHIVE DRAWINGS. EXISTING CONFIGURATION MAY DIFFER.
2. ELEVATION OF UNDER DECK WALKWAY IS BELOW MHW. SEE WALKWAY DETAILS.
3. CONTRACTOR SHALL PROTECT UNDER DECK WALKWAY FROM DAMAGE DURING CONSTRUCTION.

NOT FOR CONSTRUCTION
FOR INFORMATION ONLY

30 15 0 30 60 90
(FEET)

Appledore Marine Engineering Inc.
800 STATE STREET, SUITE E
PORTSMOUTH, NEW HAMPSHIRE 03801
(603) 766-1870 amei@appledoremarine.com

STM	DESCRIPTION	DATE	APPR

NAVFAC

SEAL

SUBMITTED BY:
A/E FIRM NAME AND ADDRESS: APPLEDORE MARINE ENGINEERING, INC. 800 STATE STREET, SUITE E PORTSMOUTH NH, 03801
DSGN: CBS DRWN: GBS CHK: RMS
SUPV: CBS
PRJMGR. NJE CIV. STR.
MECH. ARCH.
ELEC.
SUBMITTED BY: V.P. 01/15/08
(SIGNED) (TITLE) (DATE)

APPROVALS:
APPROVED:
(CUSTOMER) (CODE) (DATE)
PROJECT MANAGER:
FIRE PROTECTION:
SPV. ENG.-ARCH:
SPV. ENG.-CIVIL:
SPV. ENG.-ELEC:
SPV. ENG.-MECH:
CI - PM & E:
APPROVED:
FEAD PWD-ME DATE

DEPARTMENT OF THE NAVY
NAVAL FACILITIES ENGINEERING COMMAND
~ NAVAL FACILITIES ENGINEERING COMMAND ~
NAVAL STATION - NORFOLK, VIRGINIA
IPT PORTSMOUTH NAVAL SHIPYARD KITTERY, ME.

MISCELLANEOUS REPAIRS
TO BERTH 11 - TASK 10
EXISTING UNDERDECK WALKWAY PLAN

CODE ID. NO. 80091 SIZE D
SCALE:
MAXIMO No.: XR7CR
JOB ORDER No.: N/A
SPEC. NO. 02-08-2513
CONSTR. CONTR. NO. N40085-08-C-2513
NAVFAC DRAWING NO. 12513397
SHEET 8 OF 26
SHEET NO. C5 PW-ME DRAWING NO. FP2-08-542

DRAWFORM REVISION: 11 APRIL 2007

FILE NAME: R:\TP-104A PNSY Lifting Study\11 Reference Information\2009 Berth 11 Repair Drawings\N40085-08-C-2513 ASBUILT DWGS\FP2-542.DWG LAYOUT NAME: Layout1 PLOTTED: Friday, December 12, 2014 - 8:32am

UNCLASSIFIED

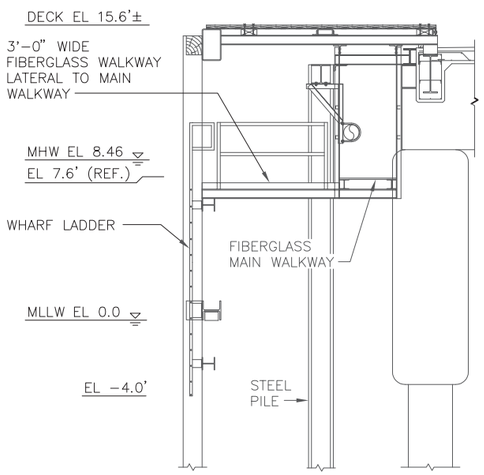

SECTION
WHARF LADDER

4 2 0 4 8 12
(FEET)

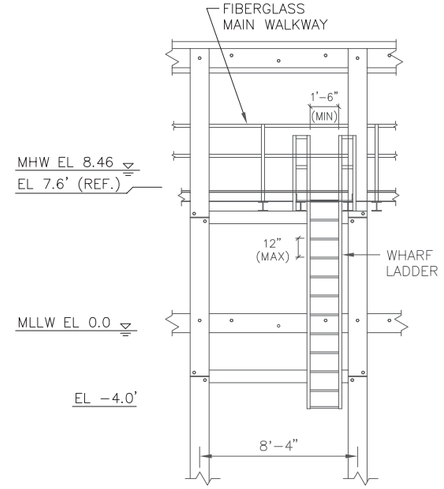

ELEVATION
WHARF LADDER

4 2 0 4 8 12
(FEET)

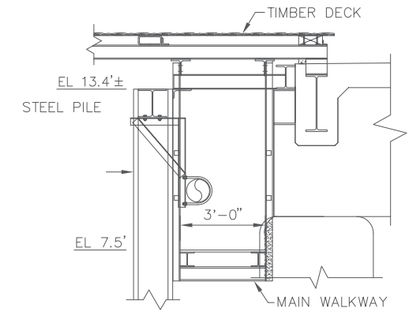

SECTION
MAIN WALKWAY

N.T.S

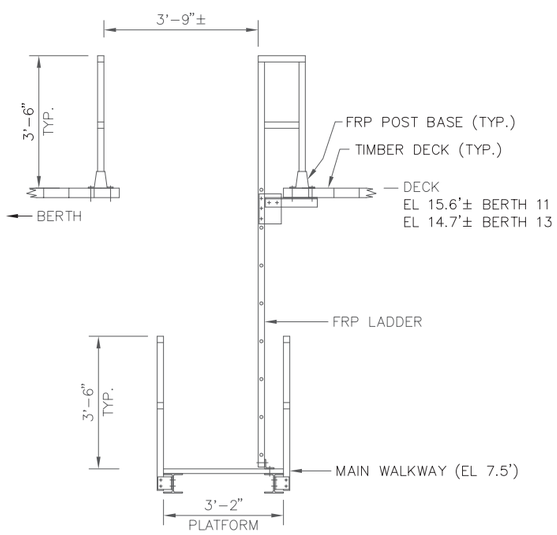

SECTION
MAIN WALKWAY ACCESS LADDER

(THROUGH TIMBER DECK)
N.T.S.

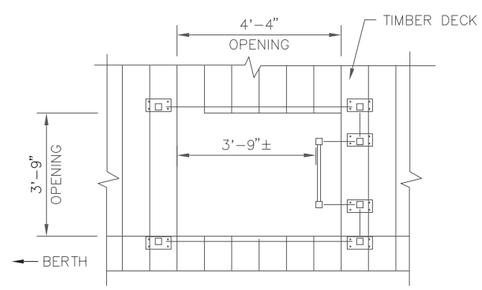

PLAN
MAIN WALKWAY ACCESS LADDER

(THROUGH TIMBER DECK)
N.T.S.

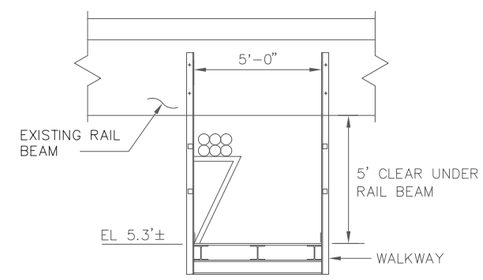

SECTION
TYPE 1 WALKWAY LATERAL

SCHEMATIC
N.T.S.

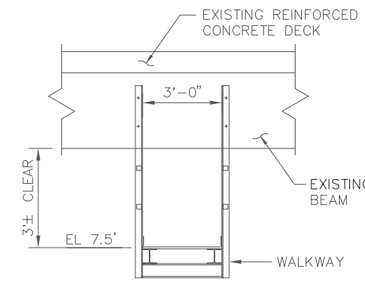

SECTION
TYPE 2 AND 3 WALKWAY LATERAL

N.T.S.

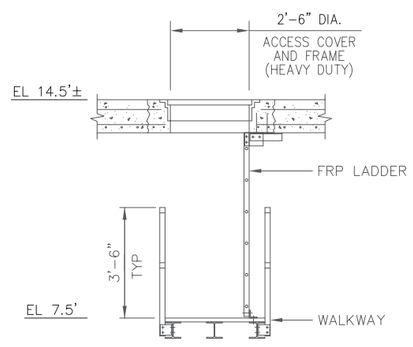

SECTION
TYPE 3 WALKWAY ACCESS LADDER

(THROUGH CONCRETE DECK)
N.T.S.

NOTES:

1. DRAWING BASED ON ARCHIVE DRAWING. EXISTING CONFIGURATION MAY DIFFER.

NOT FOR CONSTRUCTION
FOR INFORMATION ONLY

Appledore Marine Engineering Inc.
800 STATE STREET, SUITE E
PORTSMOUTH, NEW HAMPSHIRE 03801
(603) 766-1870 amei@appledoremarine.com

SYM	DESCRIPTION	DATE	APPR

NAVFAC

SEAL

SUBMITTED BY:
A/E FIRM NAME AND ADDRESS: APPLEDORE MARINE ENGINEERING, INC. 800 STATE STREET, SUITE E PORTSMOUTH NH, 03801
DSGN: CBS DRWN: GBS CHK: RMS
SUPV: CBS
PRJMGR. NJE CIV. STR.
MECH. ARCH.
ELEC.
SUBMITTED BY: V.P. 01/15/08
(SIGNED) (TITLE) (DATE)
APPROVALS:
APPROVED:
(CUSTOMER) (CODE) (DATE)
PROJECT MANAGER:
FIRE PROTECTION:
SPV. ENG.-ARCH:
SPV. ENG.-CIVIL:
SPV. ENG.-ELEC:
SPV. ENG.-MECH:
Q - PM & E:
APPROVED:
FEAD PWD-ME DATE

DEPARTMENT OF THE NAVY
NAVAL FACILITIES ENGINEERING COMMAND
~ NAVAL FACILITIES ENGINEERING COMMAND ~
NAVAL STATION - NORFOLK, VIRGINIA
IPT PORTSMOUTH NAVAL SHIPYARD KITTERY, ME.

MISCELLANEOUS REPAIRS TO BERTH 11 - TASK 10
EXISTING UNDERDECK WALKWAY DETAILS

CODE ID. NO. 80091 SIZE D
SCALE:
MAXIMO No.: XR7CR
JOB ORDER No.: N/A
SPEC. NO. 04-08-2513
CONSTR. CONTR. NO. N40085-08-C-2513
NAVFAC DRAWING NO. 12513398
SHEET 9 OF 26
SHEET NO. C6 PW-ME DRAWING NO. FP2-08-543

DRAWFORM REVISION: 11 APRIL 2007

FILE NAME: R:\TP-104A PNSY Lifting Study\11 Reference Information\2009 Berth 11 Repair Drawings\N40085-08-C-2513 ASBUILT DWGS\FP2-543.DWG LAYOUT NAME: Layout1 PLOTTED: Friday, December 12, 2044 - 8:33am

UNCLASSIFIED

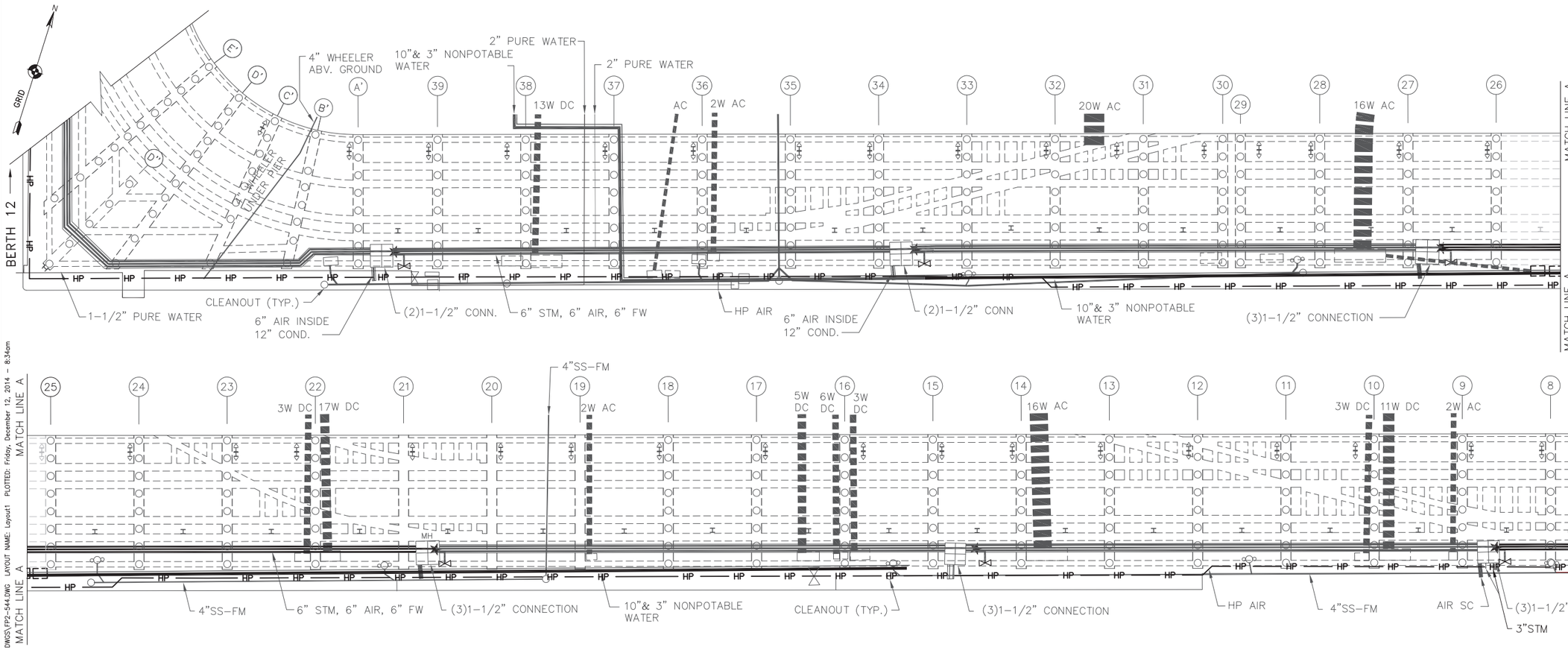

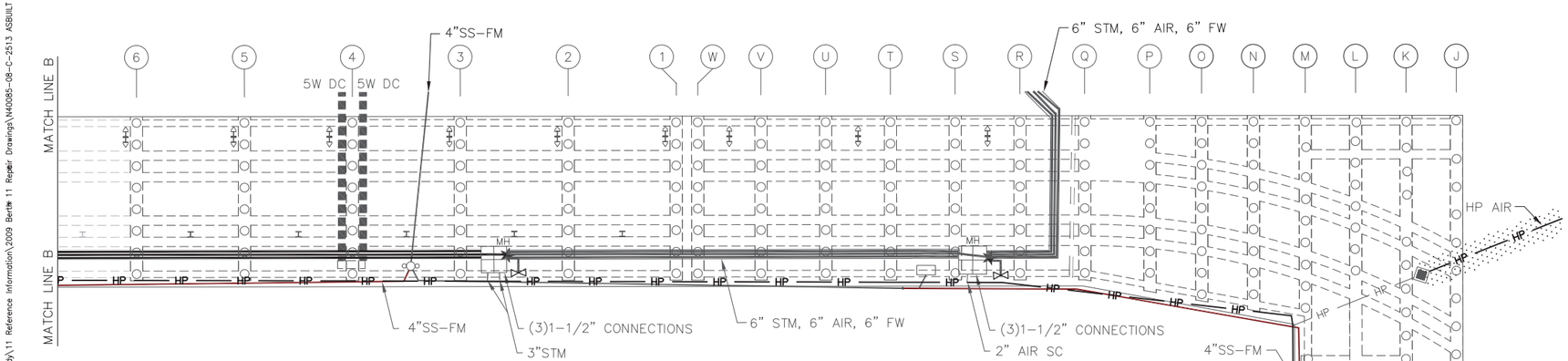

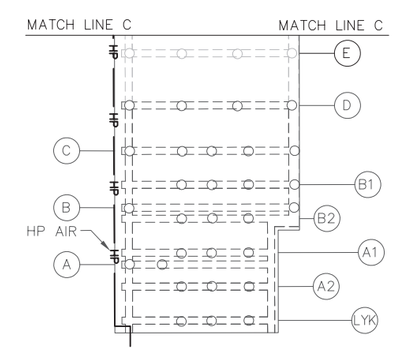

NOTES:

1. UTILITIES SHOWN ARE BASED ON GOVERNMENT ARCHIVE DRAWINGS. LOCATIONS SHOWN ARE APPROXIMATE. EXISTING CONDITIONS MAY DIFFER.
2. UTILITIES BEHIND WHARF ARE NOT SHOWN.
3. CONTRACTOR SHALL VERIFY LOCATION OF UNDER DECK UTILITIES PRIOR TO CONCRETE DEMOLITION AND NOTIFY CONTRACTING OFFICER OF INTERFERENCE AND COORDINATE AS NEEDED.

LEGEND:

- (42) PILE BENT LOCATIONS
- CONCRETE UTILITY VAULT
- HUNG UTILITY

NOT FOR CONSTRUCTION
FOR INFORMATION ONLY

16 8 0 16 32 48
(FEET)

Appledore Marine Engineering Inc.
800 STATE STREET, SUITE E
PORTSMOUTH, NEW HAMPSHIRE 03801
(603) 766-1870 amei@appledoremarine.com

APPR	DATE	DESCRIPTION	STM

SEAL

SUBMITTED BY:
A/E FIRM NAME AND ADDRESS: APPLEDORE MARINE ENGINEERING, INC. 800 STATE STREET, SUITE E PORTSMOUTH NH, 03801
DSGN: CBS DRWN: GBS CHK: RMS
SUPV: CBS
PRJMGR. NJE CIV. STR.
MECH. ARCH.
ELEC.
SUBMITTED BY: V.P. 01/15/08
(SIGNED) (TITLE) (DATE)

APPROVALS:
APPROVED:
(CUSTOMER) (CODE) (DATE)
PROJECT MANAGER:
FIRE PROTECTION:
SPV. ENG.-ARCH:
SPV. ENG.-CIVIL:
SPV. ENG.-ELEC:
SPV. ENG.-MECH:
CI - FM & E:
APPROVED:
TEAD PWD-ME DATE

DEPARTMENT OF THE NAVY
NAVAL FACILITIES ENGINEERING COMMAND
~ NAVAL FACILITIES ENGINEERING COMMAND ~
NAVAL STATION - NORFOLK, VIRGINIA
IPT PORTSMOUTH NAVAL SHIPYARD KITTERY, ME.

MISCELLANEOUS REPAIRS TO BERTH 11 - TASK 10
EXISTING UTILITIES PLAN

CODE ID. NO. 80091 SIZE D
SCALE:
MAXIMO No.: XR7CR
JOB ORDER No.: N/A
SPEC. NO. 04-08-2513
CONSTR. CONTR. NO. N40085-08-C-2513
NAVFAC DRAWING NO. 12513399
SHEET 10 OF 26
SHEET NO. C7 PW-ME DRAWING NO. FP2-08-544

DRAWFORM REVISION: 11 APRIL 2007

FILE NAME: R:\TP-104A PNSY Lifting Study\11 Reference Information\2009 Berth 11 Repair Drawings\N40085-08-C-2513 ASBUILT DWGS\FP2-544.DWG LAYOUT NAME: Layout1 PLOTTED: Friday, December 12, 2014 - 8:34am

UNCLASSIFIED

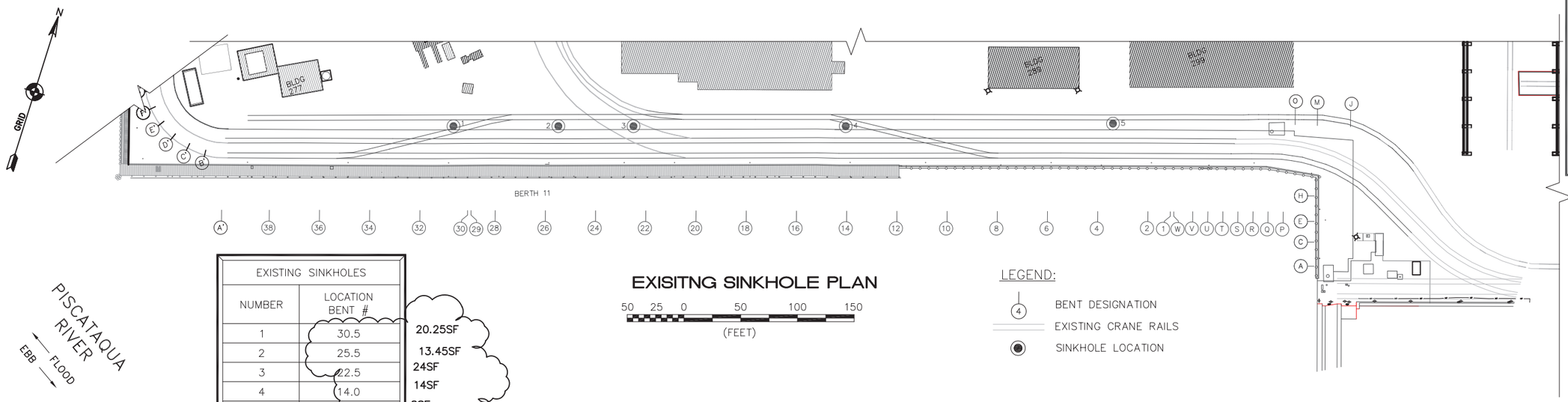

EXISTING SINKHOLES	
NUMBER	LOCATION BENT #
1	30.5
2	25.5
3	22.5
4	14.0
5	3.5

20.25SF
13.45SF
24SF
14SF
8SF

EXISITNG SINKHOLE PLAN

50 25 0 50 100 150
(FEET)

LEGEND:

- (4) BENT DESIGNATION
- EXISTING CRANE RAILS
- SINKHOLE LOCATION

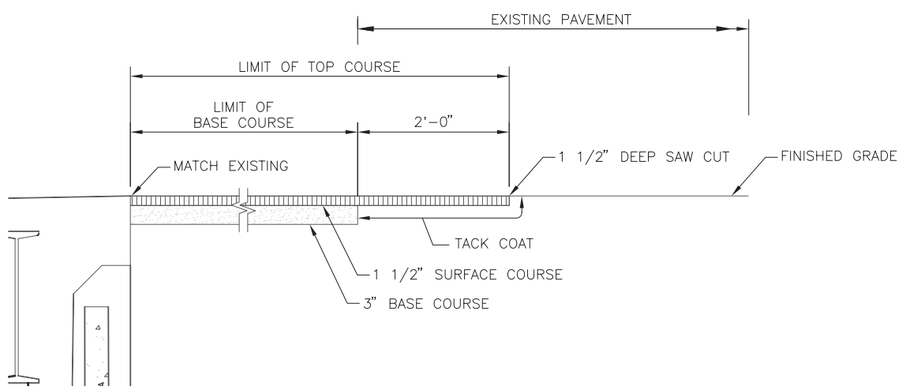

DETAIL
TYPICAL PAVEMENT REPAIR

1 1/2 0 1 2 3
(FEET)

PAVEMENT REPAIR NOTES:

1. CONTRACTOR SHALL REPAIR EXISTING PAVEMENT DAMAGED OR REMOVED AS A RESULT OF REPAIR WORK OR AS DIRECTED.
2. SAW CUT, REMOVE AND PROPERLY DISPOSE OF EXISTING PAVEMENT AS SHOWN OR AS DIRECTED.
3. PREPARE THE SUB-BASE AND PLACE THE BASE COURSE AND SURFACE COURSE AS SHOWN AND IN ACCORDANCE WITH SECTION 321000.

SINKHOLE REPAIR NOTES:

1. SINKHOLE SIZE VARIES. IT IS THE CONTRACTOR'S RESPONSIBILITY TO EVALUATE AND DETERMINE THE ACTUAL BELOW GRADE EXTENTS, IN THE PRESENCE OF THE CONTRACTING OFFICER.
2. SINKHOLES ARE GENERALLY LOCATED AROUND AREAS OF UTILITY PENETRATIONS OR RAIL TURNOUTS. CONTRACTOR SHALL PROVIDE TEMPORARY SUPPORT AS NEEDED DURING SINKHOLE REPAIR OPERATIONS.
3. CONTRACTOR SHALL COORDINATE UTILITY LOCATIONS WITH PNSY PUBLIC WORKS AND APPROPRIATE SHOPS PRIOR TO EXCAVATION.
4. CONTRACTOR SHALL SAWCUT THE PAVEMENT AND EXCAVATE TO THE LIMITS APPROVED BY THE CONTRACTING OFFICER.
5. CONTRACTOR SHALL BACKFILL THE EXCAVATION WITH STONE FILL ~~(MDOT SECTION 610 AND 703.25)~~ TO WITHIN 18" OF FINISHED GRADE, PLACE AND SECURE DRAINAGE GEOTEXTILE (MDOT 620 AND 722.02), PLACE 12" MINIMUM LAYER OF DRAINAGE AGGREGATE (MDOT 620 AND 703.06), AND PLACE PAVEMENT PER SPECIFICATION SECTION. FINAL FINISHED GRADE SHALL MATCH EXISTING GRADE. **REPLACE WITH TYPE A RIPRAP PER RFI#15**
6. FOR BIDDING PURPOSES, CONTRACTOR SHALL ASSUME ONE ADDITIONAL SINKHOLE WILL DEVELOPE PRIOR TO THE START OF CONSTRUCTION.

Appledore Marine Engineering Inc.
800 STATE STREET, SUITE E
PORTSMOUTH, NEW HAMPSHIRE 03801
(603) 766-1870 amel@appledoremarine.com

SYM	DESCRIPTION	DATE	APPR

NAVFAC

SEAL

SUBMITTED BY:
A/E FIRM NAME AND ADDRESS: APPLEDORE MARINE ENGINEERING, INC. 800 STATE STREET, SUITE E PORTSMOUTH NH, 03801
DSGN: CBS DRWN: GBS CHK: RMS
SUPV: CBS
PRJMGR. NJE CIV. STR.
MECH. ARCH.
ELEC.
SUBMITTED BY:
V.P. 01/15/08
(SIGNED) (TITLE) (DATE)

APPROVALS:
APPROVED:
(CUSTOMER) (CODE) (DATE)
PROJECT MANAGER:
FIRE PROTECTION:
SPV. ENG.-ARCH:
SPV. ENG.-CIVIL:
SPV. ENG.-ELEC:
SPV. ENG.-MECH:
CI - PM & E:
APPROVED:
FEAD PWD-ME DATE

DEPARTMENT OF THE NAVY
NAVAL FACILITIES ENGINEERING COMMAND
~ NAVAL FACILITIES ENGINEERING COMMAND ~
NAVAL STATION - NORFOLK, VIRGINIA
PT PORTSMOUTH NAVAL SHIPYARD KITTERY, ME.

MISCELLANEOUS REPAIRS
TO BERTH 11 - TASK 10
SINKHOLE REPAIR PLAN AND DETAILS

CODE ID. NO. 80091 SIZE D
SCALE:
MAXIMO No.: XR7CR
JOB ORDER No.: N/A
SPEC. NO. 04-08-2513
CONSTR. CONTR. NO. N40085-08-C-2513
NAVFAC DRAWING NO. 12513400
SHEET 11 OF 26
SHEET NO. C8 PW-ME DRAWING NO. FP2-08-545

DRAWFORM REVISION: 11 APRIL 2007

FILE NAME: R:\TP-104A PNSY Lifting Study\11 Reference Information\2009 Berth 11 Repair Drawings\N40085-08-C-2513 ASBUILT DWGS\FP2-545.dwg LAYOUT NAME: Layout1 PLOTTED: Friday, December 12, 2014 - 8:35am

UNCLASSIFIED

PILE REPAIR SCHEDULE

BENT	ROW	APPROX. ELEVATION*	REPAIR TYPE
B	B	+3 FT	STRUCTURAL
O	F	+2 FT	NON-STRUCTURAL
P.2	F.7	+3 FT	STRUCTURAL
P.2	G	+3 FT	STRUCTURAL
P.7	G.7	+3 FT	STRUCTURAL
6	E	+3 FT	NON-STRUCTURAL
8	E	+3 FT	NON-STRUCTURAL
27	E	+2 FT	NON-STRUCTURAL
28	D	+2 FT	NON-STRUCTURAL
28	E	+1 FT	NON-STRUCTURAL
A'	D	+2 FT	NON-STRUCTURAL
B'	D	+3 FT	NON-STRUCTURAL
D'	H	+4 FT	NON-STRUCTURAL

BATTERED PILE
BATTERED PILE
BATTERED PILE

SEE SHEET C2 FOR PILE JACKET LOCATIONS AND G3 FOR BIDDING QUANTITIES

* INDICATES CENTER OF EXPOSED STEEL IN FT REFERENCED TO MLLW

PILE REPAIR NOTES:

1. CONTRACTOR TO FIELD VERIFY ALL PILE DIMENSIONS PRIOR TO ORDERING MATERIAL.
2. HYDROBLAST PILE SURFACES OF ALL MARINE GROWTH AND OTHER BOND INHIBITING MATERIALS. WASTE WATER SHALL BE COLLECTED FOR PROPER DISPOSAL. WATER USED FOR MARINE GROWTH REMOVAL ONLY NEED NOT BE COLLECTED. CONTRACTOR SHALL COORDINATE INSPECTION OF CLEANED AND PREPARED SURFACE WITH CONTRACTING OFFICER BEFORE JACKET PLACEMENT.
3. REINFORCING STEEL SHALL CONFORM TO ASTM A615M, GRADE 60 AND BE EPOXY COATED.
4. MAINTAIN 3" OF CLEAR COVER TO ALL REINFORCING STEEL, UNLESS OTHERWISE NOTED.
5. PLACE FIBERGLASS JACKET AROUND THE PILE AND SECURELY FASTEN IN PLACE.
6. PLACE LATERAL FORMWORK, EXTERNAL BRACING, BANDING AND CLAMPS AROUND THE JACKET TO KEEP ITS SHAPE AND IN PLACE AS NEEDED.
7. FILL ANNULAR SPACE WITH GROUT HAVING A MINIMUM COMPRESSIVE STRENGTH OF 5,000 PSI AND IN ACCORDANCE WITH THE SPECIFICATIONS.
8. REMOVE ALL FORMWORK, EXTERNAL BRACING AND BANDING WHEN THE GROUT HAS REACHED ITS FINAL SET (APPROXIMATELY 48 HOURS), CLEAN THE JACKET OF ANY SPILLED FILLER MATERIAL.
9. BACKFILL EXCAVATIONS AFTER JACKET INSTALLATION.

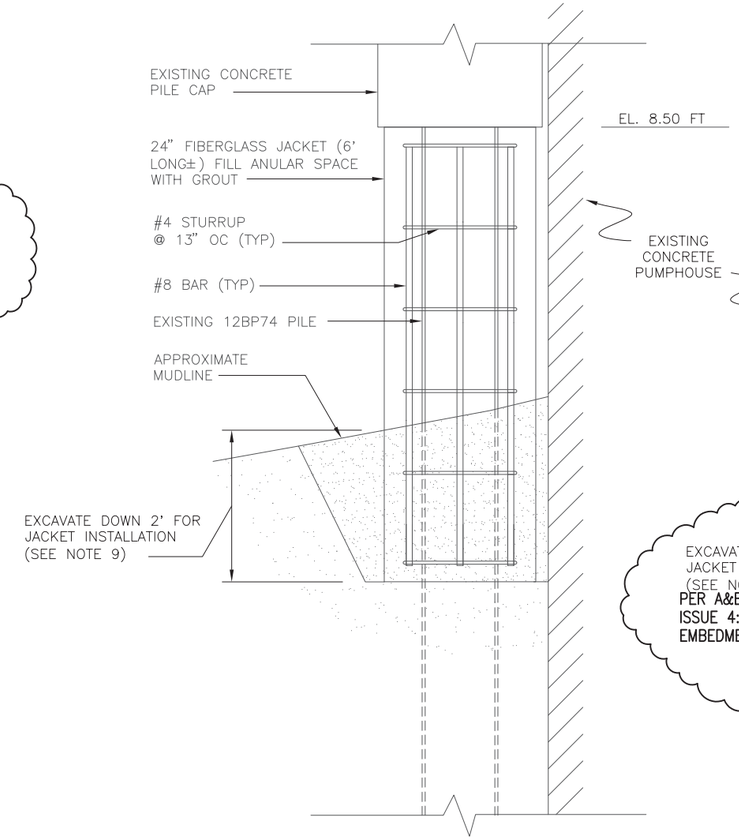

DETAIL
STRUCTURAL PILE JACKET REPAIR
1 1/2 0 1 2 3
(FEET)

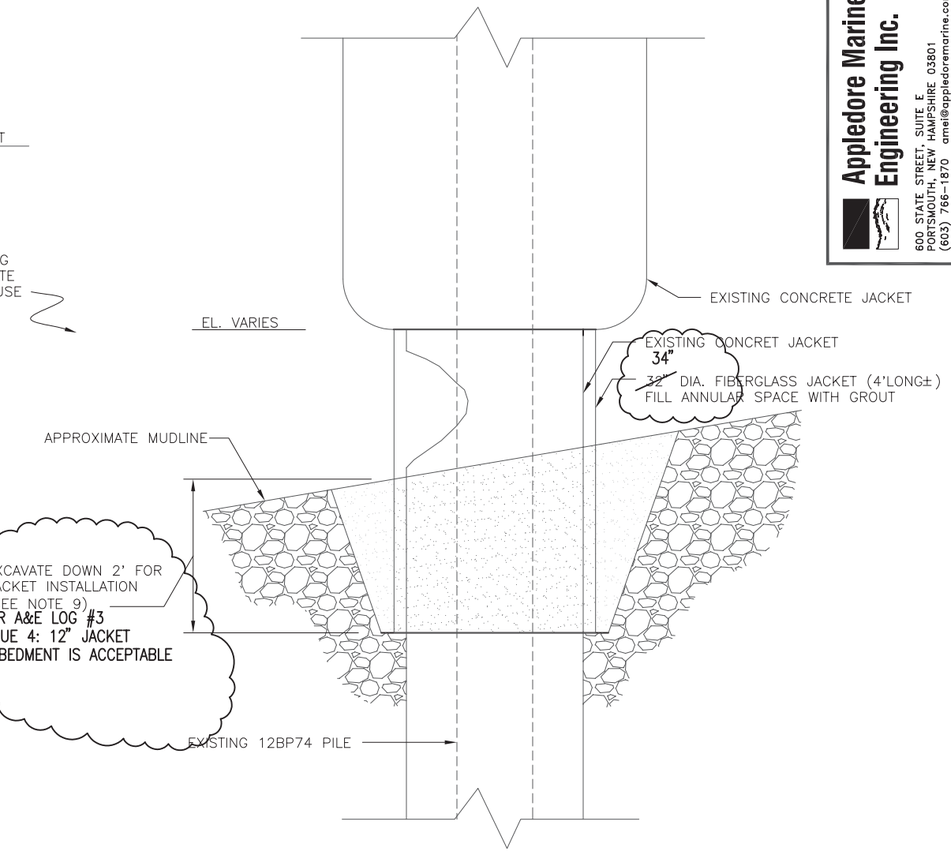

DETAIL
NON-STRUCTURAL PILE JACKET REPAIR
1 1/2 0 1 2 3
(FEET)

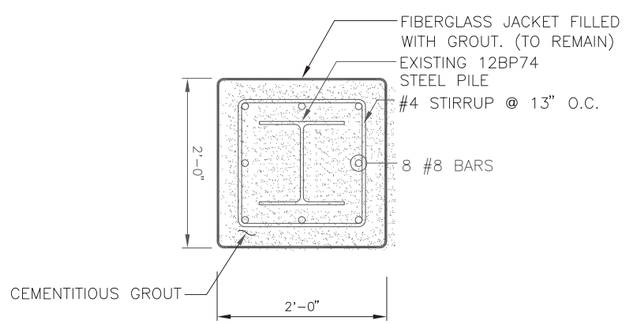

SECTION
STRUCTURAL PILE JACKET REPAIR
1 1/2 0 1 2 3
(FEET)

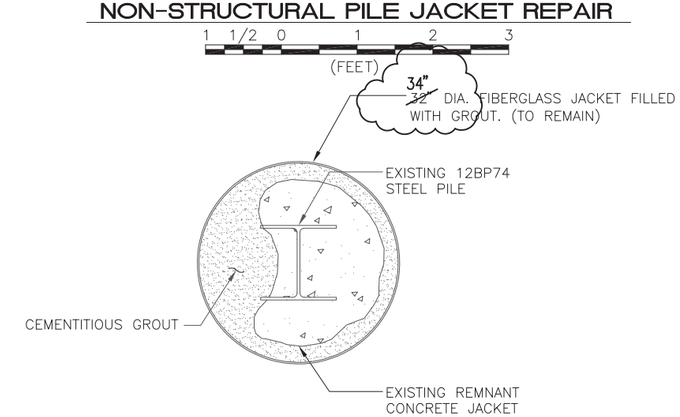

SECTION
NON-STRUCTURAL PILE JACKET REPAIR
1 1/2 0 1 2 3
(FEET)

Appledore Marine Engineering Inc.
800 STATE STREET, SUITE E
PORTSMOUTH, NEW HAMPSHIRE 03801
(603) 766-1870 amei@appledoremarine.com

DESCRIPTION	DATE	APPR

NAVFAC

SEAL

SUBMITTED BY:
A/E FIRM NAME AND ADDRESS: APPLEDORE MARINE ENGINEERING, INC. 800 STATE STREET, SUITE E PORTSMOUTH NH, 03801
DSGN: CBS DRWN: GBS CHK: RMS
SUPV: CBS
PRJMGR. NJE CIV. STR.
MECH. ARCH.
ELEC.
SUBMITTED BY: V.P. 01/15/08
(SIGNED) (TITLE) (DATE)
APPROVALS:
APPROVED:
(CUSTOMER) (CODE) (DATE)
PROJECT MANAGER:
FIRE PROTECTION:
SPV. ENG.-ARCH:
SPV. ENG.-CIVIL:
SPV. ENG.-ELEC:
SPV. ENG.-MECH:
CI - PM & E:
APPROVED:
FEAD PWD-ME DATE

DEPARTMENT OF THE NAVY
NAVAL FACILITIES ENGINEERING COMMAND
~ NAVAL FACILITIES ENGINEERING COMMAND ~
NAVAL STATION - NORFOLK, VIRGINIA
KITTERY, ME.
IPT PORTSMOUTH NAVAL SHIPYARD
MISCELLANEOUS REPAIRS TO BERTH 11 - TASK 10
PILE REPAIR SCHEDULES AND DETAILS

CODE ID. NO. 80091 SIZE D
SCALE:
MAXIMO No.: XR7CR
JOB ORDER No.: N/A
SPEC. NO. 04-08-2513
CONSTR. CONTR. NO. N40085-08-C-2513
NAVFAC DRAWING NO. 12513401
SHEET 12 OF 26
SHEET NO. S1 PW-ME DRAWING NO. FP2-08-546

DRAWFORM REVISION: 11 APRIL 2007

FILE NAME: R:\TP-104A PNSY Lifting Study\11 Reference Information\2009 Berth 11 Repair Drawings\N40085-08-C-2513 ASBUILT DWGS\FP2-546.dwg LAYOUT NAME: Layout1 PLOTTED: Friday, December 12, 2014 - 8:36am

UNCLASSIFIED

PILE CAP

OUTBOARD FASCIA BEAM AND PILE CAP

CRANE RAIL BEAM

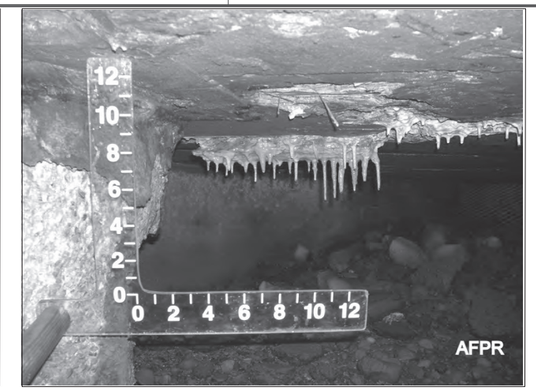

BOTTOM OF DECK

UNDER DECK DETERIORATION PHOTOGRAPHS

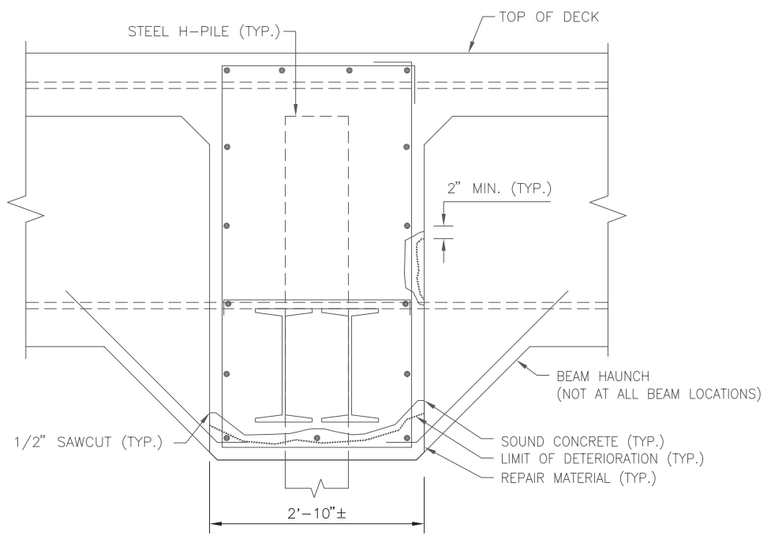

SECTION
CONCRETE REPAIR A - PILE CAP

1 0.5 0 1 2 3
(FEET)

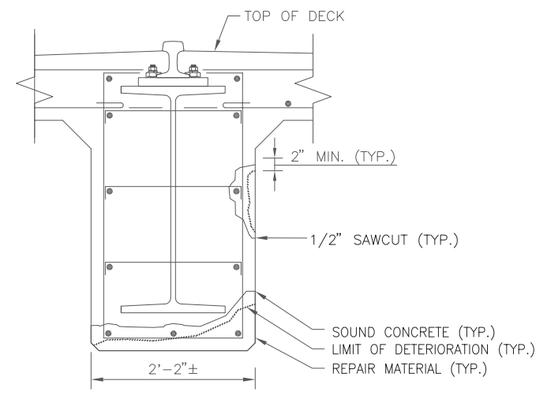

SECTION
CONCRETE REPAIR B - RAILROAD/CRANE RAIL BEAM

1 0.5 0 1 2 3
(FEET)

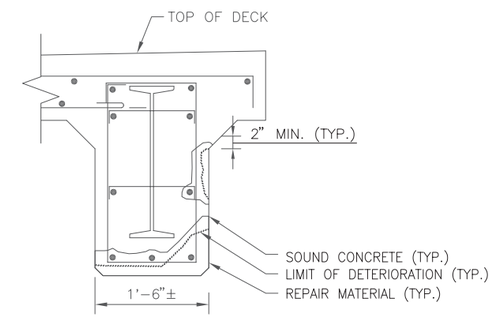

SECTION
CONCRETE REPAIR C - FASCIA BEAM

1 0.5 0 1 2 3
(FEET)

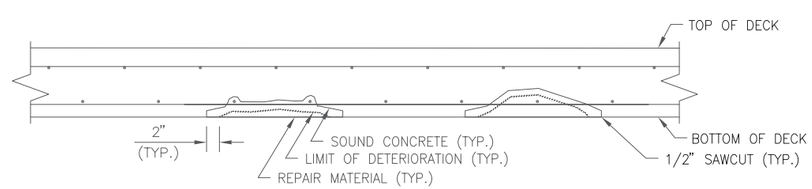

SECTION
CONCRETE REPAIR D - BOTTOM OF DECK

1 0.5 0 1 2 3
(FEET)

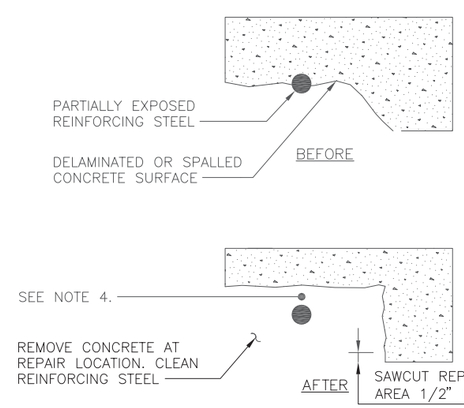

DETAIL
REPAIR PREPARATION

NOT TO SCALE

REPAIR DETAIL NOTES:

1. REMOVE ALL LOOSE AND UNSOUND CONCRETE IN AREA OF DETERIORATION (SPALL OR IMMINENT SPALL). DEPTH OF CONCRETE REMOVAL SHALL BE A MINIMUM OF 1/2" INTO SOUND CONCRETE AND/OR 1" BEYOND ANY EXPOSED REINFORCING STEEL.
2. REINFORCING STEEL EXPOSED DURING THE REPAIR PROCESS SHALL BE COMPLETELY EXPOSED WITHIN THE CONCRETE REPAIR LIMITS.
3. WHERE EXISTING EXPOSED STIRRUPS AND LONGITUDINAL REINFORCING STEEL HAVE A MINIMUM 50% SECTION LOSS, CONTRACTOR SHALL INSTALL ADDITIONAL REINFORCEMENT AS SHOWN ON SHEET S7.
4. REMOVE CORROSION AND BOND INHIBITING SUBSTANCES FROM EXPOSED STEEL SURFACES. PROVIDE A MIN. CLEARANCE AROUND THE STEEL OF 1" OR 1/4" PLUS THE MAX. SIZE OF AGGREGATE IN THE REPAIR MATERIAL, WHICHEVER IS GREATER.
5. FOR REPAIR AREAS NOT REQUIRING STIRRUP OR LONGITUDINAL REINFORCING STEEL REPAIR, CONCRETE REPAIR LIMITS SHALL EXTEND 2" BEYOND THE EDGE OF THE SPALL OR IMMINENT SPALL AND AT LEAST 1/2" INTO SOUND CONCRETE.
6. LIMITS OF DETERIORATION SHOWN ARE ILLUSTRATIVE ONLY. ACTUAL DETERIORATION DEPTHS ARE UNKNOWN.
7. SEE SHEET G3 FOR ADDITIONAL REPAIR NOTES.

Appledore Marine Engineering Inc.
800 STATE STREET, SUITE E
PORTSMOUTH, NEW HAMPSHIRE 03801
(603) 766-1870 amei@appledoremarine.com

SYM	DESCRIPTION	DATE	APPR

NAVFAC

SEAL

SUBMITTED BY:
A/E FIRM NAME AND ADDRESS: APPLEDORE MARINE ENGINEERING, INC. 800 STATE STREET, SUITE E PORTSMOUTH NH, 03801
DSGN: CBS DRWN: GBS CHK: RMS
SUPV: CBS
PRJMGR. NJE CIV. STR.
MECH. ARCH.
ELEC.
SUBMITTED BY: V.P. 01/15/08
(SIGNED) (TITLE) (DATE)
APPROVALS:
APPROVED:
(CUSTOMER) (CODE) (DATE)
PROJECT MANAGER:
FIRE PROTECTION:
SPV. ENG.-ARCH:
SPV. ENG.-CIVIL:
SPV. ENG.-ELEC:
SPV. ENG.-MECH:
CI - PM & E:
APPROVED:
FEAD PWD-ME DATE

DEPARTMENT OF THE NAVY
NAVAL FACILITIES ENGINEERING COMMAND
~ NAVAL FACILITIES ENGINEERING COMMAND ~
NAVAL STATION - NORFOLK, VIRGINIA
KITTERY, ME.
IPT PORTSMOUTH NAVAL SHIPYARD
MISCELLANEOUS REPAIRS TO BERTH 11 - TASK 10
FRAMING REPAIR DETAILS

CODE ID. NO. 80091 SIZE D
SCALE:
MAXIMO No.: XR7CR
JOB ORDER No.: N/A
SPEC. NO. 04-08-2513
CONSTR. CONTR. NO. N40085-08-C-2513
NAVFAC DRAWING NO. 12513402
SHEET 13 OF 26
SHEET NO. S2 PW-ME DRAWING NO. FP2-08-547

DRAWFORM REVISION: 11 APRIL 2007

FILE NAME: R:\TP-104A PNSY Lifting Study\11 Reference Information\2009 Berth 11 Repair Drawings\N40085-08-C-2513 ASBUILT DWGS\FP2-547.dwg LAYOUT NAME: Layout1 PLOTTED: Friday, December 12, 2014 - 8:37am

UNCLASSIFIED

BERTH 11 UNDER DECK CONCRETE REPAIRS

BENT	MEMBER	DEFECT	ORIENTATION	AREA (SF)	CONCRETE REPAIR	LOCATION
A	CAP	S	V	15	A	NOSE
C	CAP	IS	V	60	A	BENT B1 SIDE
C - D	OBF	IS	H	5	C	NEXT TO CAP D
C - D	IBF	IS	V	6	C	MID SPAN
M	OBF	S	V	2	C	
L - M	DECK	IS	H	12	D	MID SPAN BETWEEN IBF AND BEAM 5
L - M	CR	IS	H	30	B	FULL LENGTH
L - M	RR	IS	H / V	30	B	FULL LENGTH
L - M	15GCR	IS	H / V	30	B	FULL LENGTH
N	CAP	IS	V	16	A	BOTTOM OF NOSE
M - N	RR	IS	V	10 / 73	B	FULL LENGTH
N - O	15GCR	IS	H	22	B	FULL LENGTH
N - O	15GCR	IS	V	20	B	FULL LENGTH IB FACE
N - O	RR	IS	V	20	B	FULL LENGTH
N - O	15GCR	IS	V	31 / 26	B	FULL LENGTH OB FACE
P	CAP	IS	V	40 / 36	A	NOSE
P-Q	RR	IS	V	40	B	FULL LENGTH
Q	CAP	S	V	10	A	NOSE
Q - R	OBF	IS	H / V	8 / 4	C	BENT R BEAM HAUNCH
Q - R	OBF	S	V	6	C	BENT Q SIDE
Q - R	CR	IS	H / V	50	B	FULL LENGTH
Q - R	RR	IS	H / V	50	B	FULL LENGTH
Q - R	15GCR	S	H	50	B	FULL LENGTH
Q - R	20GCR	S	H	50	B	FULL LENGTH
R - S	CR	IS	H	45	B	FULL LENGTH
R - S	RR	IS	H	45	B	FULL LENGTH
R - S	OBF	IS	H	15 +51 OTHER REPAIRS	C	BENT R SIDE
S	CAP	IS	V	15 / 20	A	NOSE
S - T	CR	IS	H	45	B	
S - T	OBF	S	V	25 / 35	C	
T	CAP	IS	H	40 / 45	A	BENT S FACE BETWEEN PILES A, B, C &D
T - U	OBF	S	H / V	12 / 7	C	BENT T SIDE
U - V	RR	IS	H	40 +26 OTHER REPAIRS	B	FULL LENGTH
W	CAP	S	H	50 / 30	A	
W	CAP	S	V	25	A	OUTBOARD FACE
W	OBF	S	H / V	9	C	

BERTH 11 UNDER DECK CONCRETE REPAIRS

BENT	MEMBER	DEFECT	ORIENTATION	AREA (SF)	CONCRETE REPAIR	LOCATION
V - W	OBF	S	H / V	7 / 27	C	MID SPAN TO BENT V IB FACE
V - W	CR	IS	H	30 +22 OTHER REPAIRS	B	FULL LENGTH
1 - 2	RR	IS	V	25	B	BETWEEN H-PILE AND BENT 1
1 - 2	OBF	IS	H	4 / 8	C	MID SPAN
1 - 2	15GCR	IS	H	40	B	
2 - 3	CR	IS	H	45 / 40	B	FULL LENGTH LESS 4-FT H-PILE ENCASEMENT AND 6-FT DUCT
2 - 3	RR	IS	H	60	B	FULL LENGTH
2 - 3	15GCR	IS	H	60	B	FULL LENGTH
3 - 4	OBF	IS	H / V	12	C	BENT 4 BEAM HAUNCH
3 - 4	CR	S	V	6 / 29	B	BETWEEN BENT 3 AND H-PILE
3 - 4	CR	S	V	12 / 30	B	BETWEEN BENT 4 AND H-PILE
4	CAP	IS	V	20 / 10	A	AT PILE B
4	CAP	S	H	20 / 10	A	AT PILE B
4	CAP	IS	V	20 / 10	A	AT PILE E
4	CAP	S	V	10 / 5	A	AT PILE F
4 - 5	CR	IS	H	20 / 8	B	BETWEEN BENT 4 AND H-PILE
4 - 5	CR	S	V	16 / 12	B	BETWEEN BENT 5 AND H-PILE OB FACE
4 - 5	CR	S	V	2	B	BETWEEN BENT 5 AND H-PILE IB FACE
5	CAP	S	H / V	9 / 7	A	NOSE
5 - 6	CR	IS	H / V	8 / 4	B	BENT 6 BEAM HAUNCH
5 - 6	CR	S	H / V	10 / 6	B	NEXT TO H-PILE IB FACE
6 - 7	OBF	S	H	9	C	MID SPAN
6 - 7	CR	IS	H	20	B	BETWEEN BENT 7 AND H-PILE
6 - 7	CR	S	V	6	B	BETWEEN BENT 6 AND H-PILE
6 - 7	RR	IS	H	18	B	BETWEEN BENT 6 AND H-PILE
6 - 7	15GCR	IS	H	18	B	BETWEEN BENT 6 AND H-PILE
6	CAP	IS	V	20	A	BETWEEN BENT A AND BENT B
7	CAP	IS	V	20	A	BETWEEN BENT A AND BENT B

REPAIR NOTES:

1. SEE EXISTING FRAMING PLAN SHEETS FOR BENT LOCATIONS.
2. SEE EXISTING SECTIONS SHEETS FOR MEMBER IDENTIFICATION AND LOCATION.
3. TABLE NOMENCLATURE:
   - OBF = OUTBOARD FASCIA BEAM
   - CR = COMMON RAIL BEAM
   - RR = RAILROAD BEAM
   - 15GCR = 15' GAUGE CRANE RAIL BEAM
   - 20GCR = 20' GAUGE CRANE RAIL BEAM
   - IBF = INBOARD FASCIA BEAM
   - D1 = TRANSVERSE BEAM (DIAPHRAGM)
   - CAP = PILE CAP
   - DECK = UNDERSIDE OF DECK BETWEEN PILE CAPS
   - S = EXISTING SPALL
   - IS = IMMINENT SPALL
   - V = DEFECT PREDOMINANTLY ON THE VERTICAL FACE (SIDES) OF MEMBER
   - H = DEFECT PREDOMINANTLY ON THE HORIZONTAL FACE (BOTTOM) OF MEMBER
   - LOCATION = APPROXIMATE DEFECT LOCATION AND EXTENT
   - OB = OUTBOARD
   - IB = INBOARD
   - MIDSPAN = HALF-WAY BETWEEN BENTS
   - H-PILE = VERTICAL STEEL H-PILE LOCATED MIDSPAN BETWEEN BENTS
   - DUCT = CONCRETE UTILITY DUCT
   - * = REINFORCING STEEL REPAIR, SEE SHEETS S7
   - NOSE = OUTBOARD FACE OF THE PILE CAP
4. SEE SHEET G3 FOR BIDDING QUANTITIES.

Appledore Marine Engineering Inc.
800 STATE STREET, SUITE E
PORTSMOUTH, NEW HAMPSHIRE 03801
(603) 766-1870 amel@appledoremarine.com

MKS	DESCRIPTION	DATE	APPR

NAVFAC

SEAL

SUBMITTED BY:
A/E FIRM NAME AND ADDRESS: APPLEDORE MARINE ENGINEERING, INC. 800 STATE STREET, SUITE E PORTSMOUTH NH, 03801
DSGN: CBS DRWN: GBS CHK: RMS
SUPV: CBS
PRJMGR. NJE CIV. STR.
MECH. ARCH.
ELEC.
SUBMITTED BY: V.P. 01/15/08 (SIGNED) (TITLE) (DATE)
APPROVALS:
APPROVED:
(CUSTOMER) (CODE) (DATE)
PROJECT MANAGER:
FIRE PROTECTION:
SPV. ENG.-ARCH:
SPV. ENG.-CIVIL:
SPV. ENG.-ELEC:
SPV. ENG.-MECH:
CI - FM & E:
APPROVED:
TEAD PWD-ME DATE

DEPARTMENT OF THE NAVY
NAVAL FACILITIES ENGINEERING COMMAND
~ NAVAL FACILITIES ENGINEERING COMMAND ~
NAVAL STATION - NORFOLK, VIRGINIA
IPT PORTSMOUTH NAVAL SHIPYARD KITTERY, ME.

MISCELLANEOUS REPAIRS TO BERTH 11 - TASK 10
FRAMING REPAIR SCHEDULES

CODE ID. NO. 80091 SIZE D
SCALE:
MAXIMO No.: XR7CR
JOB ORDER No.: N/A
SPEC. NO. 04-08-2513
CONSTR. CONTR. NO. N4008508-C-2513
NAVFAC DRAWING NO. 12513403
SHEET 14 OF 26
SHEET NO. 53 PW-ME DRAWING NO. FP2-08548
DRAWFORM REVISION: 11 APRIL 2007

FILE NAME: R:\TP-104A PNSY Lifting Study\11 Reference Information\2009 Berth 11 Repair Drawings\N40085-08-C-2513 ASBUILT DWGS\FP2-548.DWG LAYOUT NAME: SHEET 1 PLOTTED: Friday, December 12, 2014 - 8:38am

UNCLASSIFIED

BERTH 11 UNDER DECK CONCRETE REPAIRS

BENT	MEMBER	DEFECT	ORIENTATION	AREA (SF)	CONCRETE REPAIR	LOCATION
7 - 8	15GCR	IS	H	12 +58 OTHER REPAIRS	B	BETWEEN BENT 8 AND H-PILE
8	CAP	IS	V	25 15	A	ABOVE PILE B AT UTILITY
8.5	DECK	S	H	45 20	D	BETWEEN RR AND 15GCR
9	CAP	S	V	45	A	NEXT TO H-PILE
9 - 10	CR	IS	V	7 15	B	BETWEEN H-PILE AND DUCT OB FACE
9 - 10	CR	S	V	5 12	B	BETWEEN H-PILE AND DUCT IB FACE
9 - 10	CR	S	H	20	B	BETWEEN BENT 9 AND H-PILE
9 - 10	CR	S	V	10	B	BETWEEN BENT 9 AND H-PILE
10	CAP	S	V	40	A	NEXT TO H-PILE
10	CAP	S	H	80	A	FULL LENGTH
10 - 11	OBF	IS	H / V	8	C	BENT 10 BEAM HAUNCH
10 - 11	CR	IS	H	90 84	B	FULL LENGTH EXCLUDING H-PILE ENCASEMENT
10 - 11	RR	IS	H	47	B	FULL LENGTH
10 - 11	IBF	IS	H / V	4	C	BENT 11 BEAM HAUNCH
10 - 11	IBF	S	H	22	C	FULL LENGTH
11	CAP	S / IS	V	7	A	BENT 10 FACE ABOVE PILE B
11 - 12	IBF	S	H	10 28	C	MID SPAN
11 - 12	CR	IS	V	10 20	B	OUTBOARD SIDE
12	CAP	IS	V	10	A	BENT 13 FACE ABOVE PILE B
12 - 13	CR	IS	H	47 32	B	FULL LENGTH
12 - 13	RR	IS	H	47 39	B	FULL LENGTH
12 - 13	15GCR	IS	H / V	4	B	BENT 13 BEAM HAUNCH
13	CAP	S / IS	V	15	A	NOSE
13	CAP	IS	V	7	A	BENT 12 FACE ABOVE PILE B
13 - 14	OBF	IS	H / V	8 4	C	BENT 14 BEAM HAUNCH
13 - 14	CR	S	H	10 5	B	BETWEEN BENT 13 AND H-PILE
13 - 14	CR	S	H	10	B	BETWEEN BENT 14 AND H-PILE
13 - 14	RR	IS	H	20 15	B	BENT 13 SIDE OB SIDE
13 - 14	15GCR	IS	H	15 5	B	BENT 13 SIDE
14	CAP	S	V	5	A	BENT 15 FACE ABOVE PILE B
14 - 15	CR	IS	H	45	B	BETWEEN BENT 14 AND H-PILE
14 - 15	RR	IS	H	47 27	B	FULL LENGTH
14 - 15	CR	S	H	10	B	BETWEEN H-PILE AND CONCRETE DUCT
14 - 15	15GCR	IS	H	47 27	B	FULL LENGTH
14 - 15	IBF	IS	H	33	C	FULL LENGTH
15	CAP	IS	V	7	A	ABOVE PILE B BENT 16 FACE
15 - 16	CR	S	V	50	B	BETWEEN BENT 15 AND H-PILE

BERTH 11 UNDER DECK CONCRETE REPAIRS

BENT	MEMBER	DEFECT	ORIENTATION	AREA (SF)	CONCRETE REPAIR	LOCATION
15 - 16	CR	IS	H	30	B	BETWEEN BENT 16 AND H-PILE
15 - 16	RR	IS	H	47 +26 OTHER REPAIRS	B	FULL LENGTH
16	CAP	S	H	100 60	-	BETWEEN BENT TO F
16 - 17	CR	IS	V	30 10	B	BETWEEN BENT 17 AND H-PILE IB SIDE
16 - 17	CR	S	V	10	B	BETWEEN BENT 16 AND H-PILE OB SIDE
17-18	15GCR	IS	H	30 10	B	BETWEEN BENT 17 AND H-PILE
17 - 18	CR	IS	H	100 50	B	FULL LENGTH
17 - 18	RR	IS	H	70 40	B	FULL LENGTH
17-18	20GCR	IS	H	10	B	BETWEEN BENT 17 AND H-PILE
18	CAP	S	V	4 3	A	NOSE
18	CAP	IS	V	15	A	BENT 19 FACE ABOVE PILES A & B
18 - 19	RR	IS	H	25 12	B	
18 - 19	15GCR	IS	H	25 20	B	
18 - 19	CR	IS	H	25 15	B	BENT 19 SIDE
19	CAP	S / IS	V	30	A	BENT 20 FACE ABOVE PILE B
19	CAP	S	H	10	A	BENT 20 FACE ABOVE PILES C & D
19 - 20	CR	S	V	7	B	BETWEEN BENT 19 AND H-PILE IB SIDE
19 - 20	RR	IS	H	90	B	FULL LENGTH
19 - 20	15GCR	IS	H	90	B	FULL LENGTH
20	CAP	IS	V	30	A	BENT 19 FACE ABOVE PILE B
20 - 21	CR	S	H	6 11	B	BETWEEN BENT 20 AND H-PILE OB SIDE
20 - 21	CR	S	H	6	B	BETWEEN H-PILE AND DUCT OB SIDE
* 20 - 21	15GCR	IS	H	90 81	B	FULL LENGTH
21	CAP	S / IS	V	20	A	BENT 22 FACE ABOVE PILES A & B
* 21 - 22	CR	S / IS	H	90	B	BETWEEN BENT 21 AND H-PILE
21 - 22	15GCR	IS	H	30 26	B	FULL LENGTH
22 - 23	CR	S	H	30 27	B	BENT 22 SIDE NEXT TO H-PILE ENCASEMENT
22 - 23	RR	IS	H	30	B	BENT 22 SIDE
22	CAP	S	V	4	A	BENT 22 SIDE
23	CAP	S	V	6 4	B	BENT 22 SIDE
23	CAP	IS	V	30	A	BENT 24 FACE ABOVE PILES A & B
23 - 24	CR	IS	H	60	B	FULL LENGTH EXCLUDING H-PILE ENCASEMENT
23 - 24	RR	IS	H	60	B	FULL LENGTH
24	CAP	IS	V	10	A	ABOVE PILES A & B BENT 23 FACE
24	CAP	S	V	6	A	NOSE
24	CAP	S / IS	V	25	A	BENT 25 FACE BETWEEN PILES A & B
24	CAP	S	V	4	A	NOSE

REPAIR NOTES:

1. SEE EXISTING FRAMING PLAN SHEETS FOR BENT LOCATIONS.
2. SEE EXISTING SECTIONS SHEETS FOR MEMBER IDENTIFICATION AND LOCATION.
3. TABLE NOMENCLATURE:
   - OBF = OUTBOARD FASCIA BEAM
   - CR = COMMON RAIL BEAM
   - RR = RAILROAD BEAM
   - 15GCR = 15' GAUGE CRANE RAIL BEAM
   - 20GCR = 20' GAUGE CRANE RAIL BEAM
   - IBF = INBOARD FASCIA BEAM
   - D1 = TRANSVERSE BEAM (DIAPHRAGM)
   - CAP = PILE CAP
   - DECK = UNDERSIDE OF DECK BETWEEN PILE CAPS
   - S = EXISTING SPALL
   - IS = IMMINENT SPALL
   - V = DEFECT PREDOMINANTLY ON THE VERTICAL FACE (SIDES) OF MEMBER
   - H = DEFECT PREDOMINANTLY ON THE HORIZONTAL FACE (BOTTOM) OF MEMBER
   - LOCATION = APPROXIMATE DEFECT LOCATION AND EXTENT
   - OB = OUTBOARD
   - IB = INBOARD
   - MIDSPAN = HALF-WAY BETWEEN BENTS
   - H-PILE = VERTICAL STEEL H-PILE LOCATED MIDSPAN BETWEEN BENTS
   - DUCT = CONCRETE UTILITY DUCT
   - * = REINFORCING STEEL REPAIR, SEE SHEETS S7
   - NOSE = OUTBOARD FACE OF THE PILE CAP
4. SEE SHEET G3 FOR BIDDING QUANTITIES.

Appledore Marine Engineering Inc.
800 STATE STREET, SUITE E
PORTSMOUTH, NEW HAMPSHIRE 03801
(603) 766-1870 amel@appledoremarine.com

SYM	DESCRIPTION	DATE	APPR

NAVFAC

SEAL

SUBMITTED BY:
A/E FIRM NAME AND ADDRESS: APPLEDORE MARINE ENGINEERING, INC. 800 STATE STREET, SUITE E PORTSMOUTH NH, 03801
DSGN: CBS DRWN: GBS CHK: RMS
SUPV: CBS
PRJMGR. NJE CIV. STR.
MECH. ARCH.
ELEC.
SUBMITTED BY: V.P. 01/15/08
(SIGNED) (TITLE) (DATE)

APPROVALS:
APPROVED:
(CUSTOMER) (CODE) (DATE)
PROJECT MANAGER:
FIRE PROTECTION:
SPV. ENG.-ARCH:
SPV. ENG.-CIVIL:
SPV. ENG.-ELEC:
SPV. ENG.-MECH:
CI - PM & E:
APPROVED:
FEAD PWD-ME DATE

DEPARTMENT OF THE NAVY
~ NAVAL FACILITIES ENGINEERING COMMAND ~
NAVAL FACILITIES ENGINEERING COMMAND
NAVAL STATION - NORFOLK, VIRGINIA
IPT PORTSMOUTH NAVAL SHIPYARD KITTERY, ME.

MISCELLANEOUS REPAIRS TO BERTH 11 - TASK 10
FRAMING REPAIR SCHEDULES

CODE ID. NO. 80091 SIZE D
SCALE:
MAXIMO No.: XR7CR
JOB ORDER No.: N/A
SPEC. NO. 02-08-2513
CONSTR. CONTR. NO. N40085-08-C-2513
NAVFAC DRAWING NO. 12513404
SHEET 15 OF 26
SHEET NO. S4 PW-ME DRAWING NO. FP2-08549

DRAWFORM REVISION: 11 APRIL 2007

FILE NAME: R:\TP-104A PNSY Lifting Study\11 Reference Information\2009 Berth 11 Repair Drawings\N40085-08-C-2513 ASBUILT DWGS\FP2-549.DWG LAYOUT NAME: SHEET 2 PLOTTED: Friday, December 12, 2014 - 8:39am

UNCLASSIFIED

BERTH 11 UNDER DECK CONCRETE REPAIRS

BENT	MEMBER	DEFECT	ORIENTATION	AREA (SF)	CONCRETE REPAIR	LOCATION
24 - 25	15GCR	IS	H	25	B	
24 - 25	CR	S	H	60	B	FULL LENGTH EXCLUDING H-PILE ENCASEMENT
24 - 25	RR	IS	H	60	B	FULL LENGTH
24 - 25	IBF	IS	H	50	C	MID SPAN
25	CAP	S	V	6	A	NOSE
25	CAP	S / IS	V	15	A	NOSE
25	CAP	S / IS	V	30	A	BENT 24 FACE BETWEEN PILES A & B
25	CAP	S / IS	V	30	A	BENT 26 FACE ABOVE PILE B
25 - 26	CR	S / IS	H	30	B	BETWEEN BENT 25 AND H-PILE
25 - 26	CR	IS	H	30	B	BETWEEN BENT 26 AND H-PILE
25 - 26	RR	IS	H	60	B	FULL LENGTH
25 - 26	15GCR	IS	V	~~90~~ 80	B	IB FACE, FULL LENGTH
25 - 26	IBF	IS	V	50	C	
26	CAP	S	V	8	A	NOSE
26	CAP	IS	V	~~30~~ 40	A	BENT 25 ABOVE PILE A&B
26 - 27	IBF	IS	V	~~30~~ 37	C	
26 - 27	CR	IS	H	~~20~~ 33	B	NEXT TO STEAM VENT
26 - 27	CR	S / IS	V	~~10~~ 20	B	BETWEEN BENT 26 AND H-PILE OB FACE
26 - 27	15GCR	IS	H	90	B	FULL LENGTH
26 - 27	RR	IS	H	~~60~~ 68	B	
27	CAP	IS	V	~~15~~ 37	A	NOSE
27 - 28	CR	IS	H / V	~~30~~ 40	B	BETWEEN BENT 27 AND H-PILE OB FACE
28	CAP	S / IS	V	~~20~~ 26	A	BENT 29 FACE BETWEEN PILES B & C
28 - 29	CR	IS	H	~~30~~ 32	B	BETWEEN BENT 28 AND H-PILE
28 - 29	15GCR	IS	H	45	B	BENT 28 SIDE
29	CAP	S	V	~~6~~ 9	A	NOSE
* 30	CAP	S	V	~~4~~ 7	A	NOSE
* 30 - 31	CR	S	H / V	~~10~~ 16	B	BETWEEN BENT 30 AND H-PILE IB FACE
30 - 31	CR	S	H / V	~~15~~ 21	B	BETWEEN BENT 31 AND H-PILE OB FACE
31	CAP	S	V	8	A	NOSE
31	CAP	S	V	~~15~~ 10	A	BENT 32 FACE BETWEEN PILES A & B
31 - 32	CR	S	H	8	B	BETWEEN BENT 31 AND H-PILE
31 - 32	CR	S	H	12	B	BETWEEN BENT 32 AND H-PILE
31 - 32	RR	IS	H	~~60~~ 51	B	FULL LENGTH
32	CAP	S	V	10	A	NOSE
* 32	CAP	IS	V	~~20~~ 40	A	BETWEEN PILES A&B

+10 OTHER REPAIRS

BERTH 11 UNDER DECK CONCRETE REPAIRS

BENT	MEMBER	DEFECT	ORIENTATION	AREA (SF)	CONCRETE REPAIR	LOCATION
* 33	CAP	IS	V	30	A	BENT 34 FACE BETWEEN PILES A & B
33 - 34	CR	S	H	~~15~~ 5	B	BENT 34 SIDE
33 - 34	IBF	S	H	~~45~~ 20	C	MID SPAN
34	CAP	IS	V	~~30~~ 26	A	BENT 35 FACE BETWEEN PILES A & B
35	CAP	IS	V	~~30~~ 24	A	BENT 36 FACE BETWEEN PILES A & B
35 - 36	CR	S	H / V	6	B	MID SPAN
35 - 36	CR	S	H / V	9	B	BENT 36 SIDE
36	CAP	IS	V	30	A	BENT 37 FACE BETWEEN PILES A & B
36	CAP	S	H	12	A	BETWEEN PILES E & F
36 - 37	CR	S / IS	V	20	B	BENT 37 SIDE
36 - 37	RR	IS	H	25	B	BENT 37 SIDE
36 - 37	15GCR	IS	H / V	25	B	BENT 37 SIDE OB FACE
37	CAP	S	H / V	12	A	BETWEEN PILES F & G
37	CAP	S	H / V	5	A	BENT 36 FACE BETWEEN PILES D & E
37	CAP	S	H / V	12	A	BENT 37 FACE BETWEEN PILES D & E
37 - 38	OBF	S	H	~~60~~ 50	C	FULL LENGTH
37 - 38	CR	S	H	30	B	BENT 37 SIDE
37 - 38	CR	S	H / V	15	B	BENT 38 SIDE IB FACE
37 - 38	RR	IS	H	60	B	BENT 37 SIDE
37 - 38	15GCR	IS	H / V	60	B	FULL LENGTH
37 - 38	20GCR	IS	H / V	40	B	
38	CAP	S	H / V	1	A	NOSE
38	CAP	S	H / V	4	A	BETWEEN PILES A & B
38 - 39	CR	IS	V	25	B	BENT 39 SIDE
38 - 39	RR	IS	H	60	B	FULL LENGTH
39	CAP	IS	V	30	A	BENT 38 SIDE
39 - A'	CR	S	H / V	10	B	BENT A' SIDE, NEXT TO DUCT
39 - A'	CR	S	H / V	8	B	BENT 39 SIDE
39 - A'	RR	IS	H	40	B	FULL LENGTH
A' - B'	IBF	S	V	8	C	OB FACE
A' - B'	15GCR	IS	H	15	B	BENT A' SIDE
A' - B'	CR	IS	H	40	B	
B'	CAP	IS	V	~~30~~ 50	A	
C'-D'	15GCR	IS	H	30	B	
D'	CAP	IS	V	~~10~~ 32	A	

REPAIR NOTES:

1. SEE EXISTING FRAMING PLAN SHEETS FOR BENT LOCATIONS.
2. SEE EXISTING SECTIONS SHEETS FOR MEMBER IDENTIFICATION AND LOCATION.
3. TABLE NOMENCLATURE:
   - OBF = OUTBOARD FASCIA BEAM
   - CR = COMMON RAIL BEAM
   - RR = RAILROAD BEAM
   - 15GCR = 15' GAUGE CRANE RAIL BEAM
   - 20GCR = 20' GAUGE CRANE RAIL BEAM
   - IBF = INBOARD FASCIA BEAM
   - D1 = TRANSVERSE BEAM (DIAPHRAGM)
   - CAP = PILE CAP
   - DECK = UNDERSIDE OF DECK BETWEEN PILE CAPS
   - S = EXISTING SPALL
   - IS = IMMINENT SPALL
   - V = DEFECT PREDOMINANTLY ON THE VERTICAL FACE (SIDES) OF MEMBER
   - H = DEFECT PREDOMINANTLY ON THE HORIZONTAL FACE (BOTTOM) OF MEMBER
   - LOCATION = APPROXIMATE DEFECT LOCATION AND EXTENT
   - OB = OUTBOARD
   - IB = INBOARD
   - MIDSPAN = HALF-WAY BETWEEN BENTS
   - H-PILE = VERTICAL STEEL H-PILE LOCATED MIDSPAN BETWEEN BENTS
   - DUCT = CONCRETE UTILITY DUCT
   - * = REINFORCING STEEL REPAIR, SEE SHEETS S7
   - NOSE = OUTBOARD FACE OF THE PILE CAP
4. SEE SHEET G3 FOR BIDDING QUANTITIES.

Appledore Marine Engineering Inc.
600 STATE STREET, SUITE E
PORTSMOUTH, NEW HAMPSHIRE 03801
(603) 766-1870 amel@appledoremarine.com

STM	DESCRIPTION	DATE	APPR

NAVFAC

SEAL

SUBMITTED BY:
A/E FIRM NAME AND ADDRESS: APPLEDORE MARINE ENGINEERING, INC. 600 STATE STREET, SUITE E PORTSMOUTH NH, 03801
DSGN: CBS DRWN: GBS CHK: RMS
SUPV: CBS
PRJMGR. NJE CIV. STR.
MECH. ARCH.
ELEC.
SUBMITTED BY: V.P. 01/15/08
(SIGNED) (TITLE) (DATE)

APPROVALS:
APPROVED:
(CUSTOMER) (CODE) (DATE)
PROJECT MANAGER:
FIRE PROTECTION:
SPV. ENG.-ARCH:
SPV. ENG.-CIVIL:
SPV. ENG.-ELEC:
SPV. ENG.-MECH:
CI - PM & E:
APPROVED:
TEAD PWD-ME DATE

DEPARTMENT OF THE NAVY
NAVAL FACILITIES ENGINEERING COMMAND
~ NAVAL FACILITIES ENGINEERING COMMAND ~
NAVAL STATION - NORFOLK, VIRGINIA
IPT PORTSMOUTH NAVAL SHIPYARD KITTERY, ME.

MISCELLANEOUS REPAIRS TO BERTH 11 - TASK 10
FRAMING REPAIR SCHEDULES

CODE ID. NO. 80091 SIZE D
SCALE:
MAXIMO No.: XR7CR
JOB ORDER No.: N/A
SPEC. NO. 04-08-2513
CONSTR. CONTR. NO. N40085-08-C-2513
NAVFAC DRAWING NO. 12513405
SHEET 16 OF 26
SHEET NO. S5 PW-ME DRAWING NO. FP2-08-550

DRAWFORM REVISION: 11 APRIL 2007

FILE NAME: R:\TP-104A PNSY Lifting Study\11 Reference Information\2009 Berth 11 Repair Drawings\N40085-08-C-2513 ASBUILT DWGS\FP2-550.DWG LAYOUT NAME: SHEET 3 PLOTTED: Friday, December 12, 2014 - 8:40am

UNCLASSIFIED

BERTH 11 STEEL REINFORCEMENT TABLE

Bent	Member	Orientation	Location	Stirrup Type	Number of Stirrups	Min. Length of Longitudinal Reinforcement (each bar, ft)
Q - R	15GCR	H	FULL LENGTH	A	10	13.50
Q - R	20GCR	H	FULL LENGTH	A	10	13.50
10 - 11	IBF	H / V	BENT 11 BEAM HAUNCH	B	3	5.75
13 - 14	CR	H	BETWEEN BENT 13 AND H-PILE	A	3	5.75
13 - 14	CR	H	BETWEEN BENT 14 AND H-PILE	A	3	5.75
21 - 22	CR	H	BETWEEN BENT 21 AND H-PILE	A	11	----
22 - 23	CR	H	BENT 22 SIDE NEXT TO H-PILE ENCASEMENT	A	4	7.00
33 - 34	CR	H	BENT 34 SIDE	A	4	7.00
33 - 34	IBF	H	MID SPAN	B	12	15.00
37 - 38	OBF	H	BENT 38 SIDE OB FACE	B	12	15.00

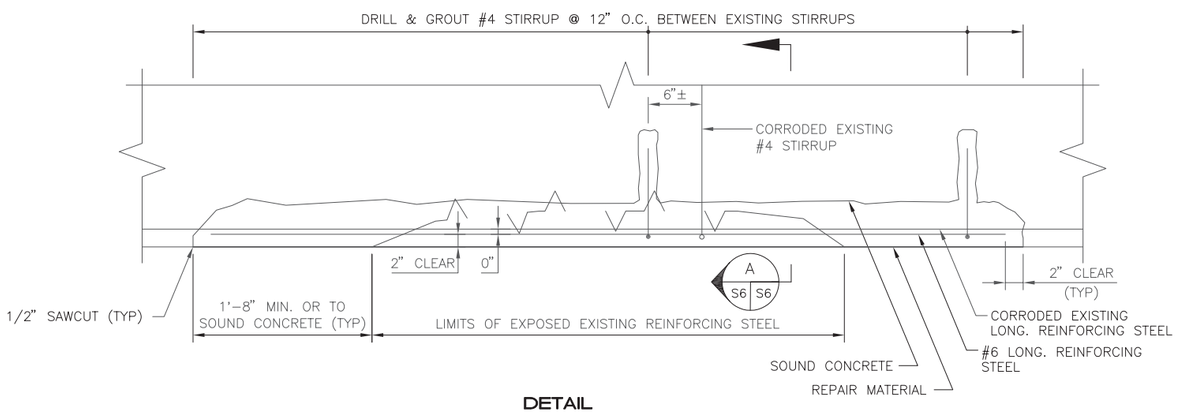

DETAIL
LONGITUDINAL REINFORCING STEEL REPAIR

NOT TO SCALE (ALL STIRRUPS NOT SHOWN. EXISTING STEEL BEAM NOT SHOWN.)

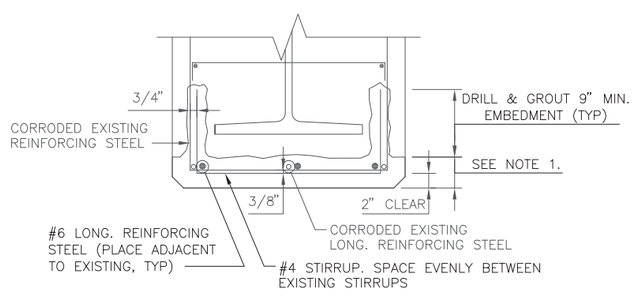

A
S6 S6

SECTION
STIRRUP REPAIR

NOT TO SCALE
(BEAM REPAIR SHOWN. PILE CAP REPAIR SIMILAR)

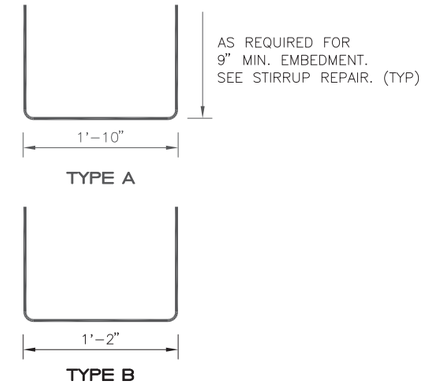

STIRRUP SCHEMATIC
(NOT TO SCALE)

REPAIR NOTES:

1. SEE EXISTING FRAMING PLAN SHEETS FOR BENT LOCATIONS.
2. SEE EXISTING SECTIONS SHEETS FOR MEMBER IDENTIFICATION AND LOCATION.
3. TABLE NOMENCLATURE:
   - OBF = OUTBOARD FASCIA BEAM
   - CR = COMMON RAIL BEAM
   - RR = RAILROAD BEAM
   - 15GCR = 15' GAUGE CRANE RAIL BEAM
   - 20GCR = 20' GAUGE CRANE RAIL BEAM
   - IBF = INBOARD FASCIA BEAM
   - D1 = TRANSVERSE BEAM (DIAPHRAGM)
   - CAP = PILE CAP
   - DECK = UNDERSIDE OF DECK BETWEEN PILE CAPS
   - S = EXISTING SPALL
   - IS = IMMINENT SPALL
   - V = DEFECT PREDOMINANTLY ON THE VERTICAL FACE (SIDES) OF MEMBER
   - H = DEFECT PREDOMINANTLY ON THE HORIZONTAL FACE (BOTTOM) OF MEMBER
   - LOCATION = APPROXIMATE DEFECT LOCATION AND EXTENT
   - OB = OUTBOARD
   - IB = INBOARD
   - MIDSPAN = HALF-WAY BETWEEN BENTS
   - H-PILE = VERTICAL STEEL H-PILE LOCATED MIDSPAN BETWEEN BENTS
   - DUCT = CONCRETE UTILITY DUCT
   - * = REINFORCING STEEL REPAIR, SEE SHEETS S3 AND S10
   - NOSE = OUTBOARD FACE OF THE PILE CAP
4. SEE SHEET G3 FOR BIDDING QUANTITIES.

Appledore Marine Engineering Inc.
800 STATE STREET, SUITE E
PORTSMOUTH, NEW HAMPSHIRE 03801
(603) 766-1870 amei@appledoremarine.com

STM	DESCRIPTION	DATE	APPR

NAVFAC

SEAL

SUBMITTED BY:
A/E FIRM NAME AND ADDRESS: APPLEDORE MARINE ENGINEERING, INC. 800 STATE STREET, SUITE E PORTSMOUTH NH, 03801
DSGN: CBS DRWN: GBS CHK: RMS
SUPV: CBS
PRJMGR. NJE CIV. STR.
MECH. ARCH.
ELEC.
SUBMITTED BY: V.P. 01/15/08
(SIGNED) (TITLE) (DATE)
APPROVALS:
APPROVED:
(CUSTOMER) (CODE) (DATE)
PROJECT MANAGER:
FIRE PROTECTION:
SPV. ENG.-ARCH:
SPV. ENG.-CIVIL:
SPV. ENG.-ELEC:
SPV. ENG.-MECH:
CI - PM & E:
APPROVED:
FEAD PWD-ME DATE

DEPARTMENT OF THE NAVY
NAVAL FACILITIES ENGINEERING COMMAND
~ NAVAL FACILITIES ENGINEERING COMMAND ~
NAVAL STATION - NORFOLK, VIRGINIA
IPT PORTSMOUTH NAVAL SHIPYARD KITTERY, ME.

MISCELLANEOUS REPAIRS
TO BERTH 11 - TASK 10
FRAMING REPAIR SCHEDULES

CODE ID. NO. 80091 SIZE D
SCALE:
MAXIMO No.: XR7CR
JOB ORDER No.: N/A
SPEC. NO. 04-08-2513
CONSTR. CONTR. NO. N40085-08-C-2513
NAVFAC DRAWING NO. 12513406
SHEET 17 OF 26
SHEET NO. S6 PW-ME DRAWING NO. FP2-08551

DRAWFORM REVISION: 11 APRIL 2007

FILE NAME: R:\TP-104A PNSY Lifting Study\11 Reference Information\2009 Berth 11 Repair Drawings\N40085-08-C-2513 ASBUILT DWGS\FP2-551.DWG LAYOUT NAME: SHEET 7 PLOTTED: Friday, December 12, 2014 - 8:40am

UNCLASSIFIED

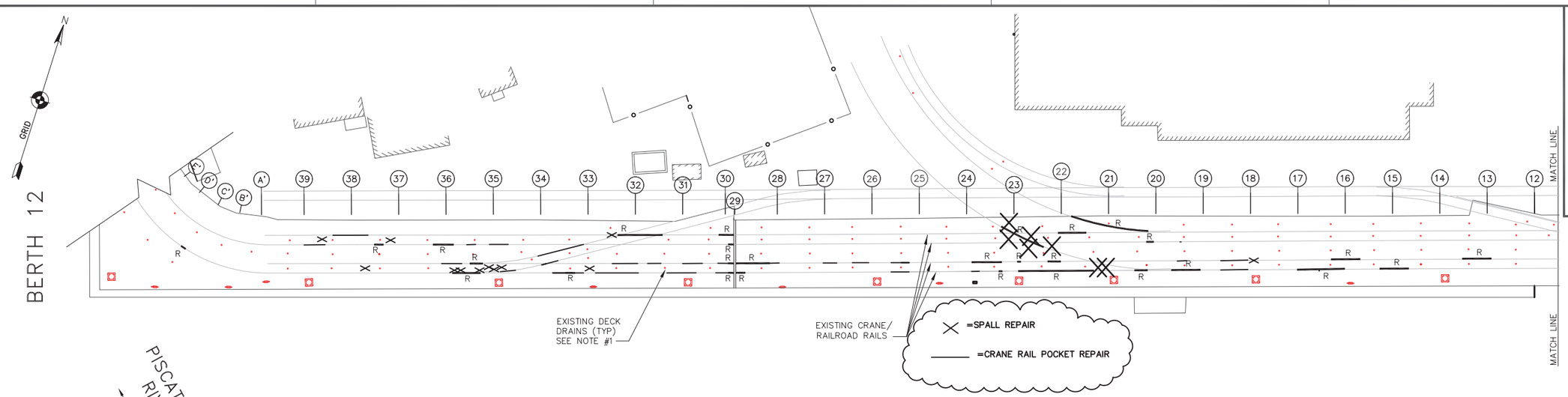

DECK PLAN

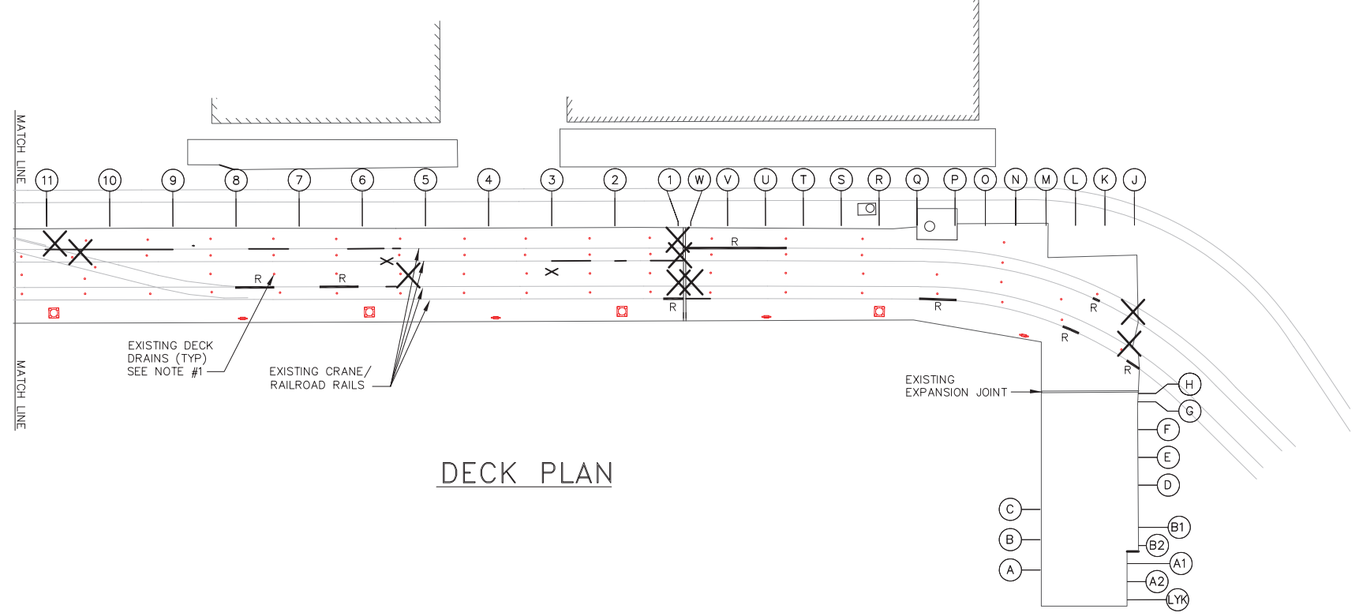

DECK PLAN

30 15 0 30 60 90
(FEET)

TYPICAL RAIL POCKET DETERIORATION

TYPICAL SPALL IN CONCRETE DECK

LEGEND

(37)	EXISTING PILE BENT LOCATION
R	EXISTING DAMAGED RAIL POCKETS TO BE REPAIRED (450 LF)
X	EXISTING SPALL OR DAMAGED CONCRETE DECK TO BE REPAIRED (150 SF)

NOTES:

1. CRANE AND RAILROAD RAILS ARE CONTINUOUS THROUGH THE DECK EXPANSION JOINTS.
2. APPLY A THICK COATING OF PETROLATUM WAX PRIMER ALONG 5'-0"± OF EXPOSED SIDES OF CRANE RAILROAD RAILS PRIOR TO PLACING RAIL POCKET CONCRETE AT EXPANSION JOINTS (RAIL EXPANSION SIDE ONLY).
3. SEE SHEET G3 FOR BIDDING QUANTITIES

Appledore Marine Engineering Inc.
800 STATE STREET, SUITE E
PORTSMOUTH, NEW HAMPSHIRE 03801
(603) 766-1870 amel@appledoremarine.com

SYM	DESCRIPTION	DATE	APPR

NAVFAC

SEAL

SUBMITTED BY:
A/E FIRM NAME AND ADDRESS: APPLEDORE MARINE ENGINEERING, INC. 800 STATE STREET, SUITE E PORTSMOUTH NH, 03801
DSGN: CBS DRWN: GBS CHK: RMS
SUPV: CBS
PRJMGR. NJE CIV. STR.
MECH. ARCH.
ELEC.
SUBMITTED BY: V.P. 01/15/08
(SIGNED) (TITLE) (DATE)

APPROVALS:
APPROVED:
(CUSTOMER) (CODE) (DATE)
PROJECT MANAGER:
FIRE PROTECTION:
SPV. ENG.-ARCH:
SPV. ENG.-CIVIL:
SPV. ENG.-ELEC:
SPV. ENG.-MECH:
CI - PM & E:
APPROVED:
FEAD PWD-ME DATE

DEPARTMENT OF THE NAVY
~ NAVAL FACILITIES ENGINEERING COMMAND ~
NAVAL FACILITIES ENGINEERING COMMAND
NAVAL STATION - NORFOLK, VIRGINIA
IPT PORTSMOUTH NAVAL SHIPYARD KITTERY, ME.

MISCELLANEOUS REPAIRS TO BERTH 11 - TASK 10
DECK REPAIR PLAN

CODE ID. NO. 80091 SIZE D
SCALE:
MAXIMO No.: XR7CR
JOB ORDER No.: N/A
SPEC. NO. 04-08-2513
CONSTR. CONTR. NO. N40085-08-C-2513
NAVFAC DRAWING NO. 12513407
SHEET 18 OF 26
SHEET NO. S7 PW-ME DRAWING NO. FP2-08-552

DRAWFORM REVISION: 11 APRIL 2007

FILE NAME: R:\TP-104A PNSY Lifting Study\11 Reference Information\2009 Berth 11 Repair Drawings\N40085-08-C-2513 ASBUILT DWGS\FP2-552.dwg LAYOUT NAME: Layout1 PLOTTED: Friday, December 12, 2014 - 8:42am

UNCLASSIFIED

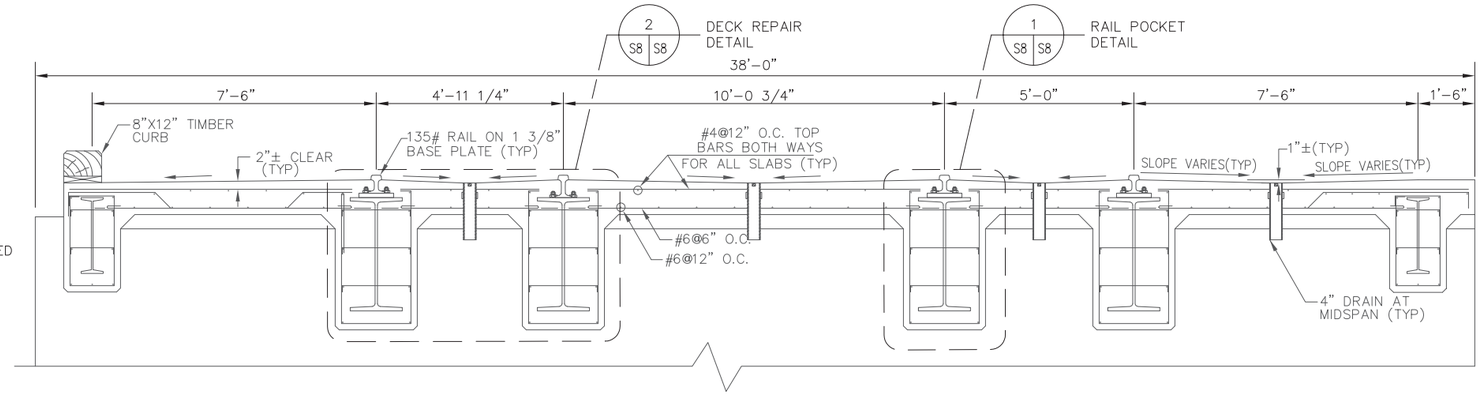

NOTE
FENDER SYSTEM IS OMITTED FOR DRAWING CLARITY

TYPICAL
DECK SECTION

2 1 0 2 4 6
(FEET)

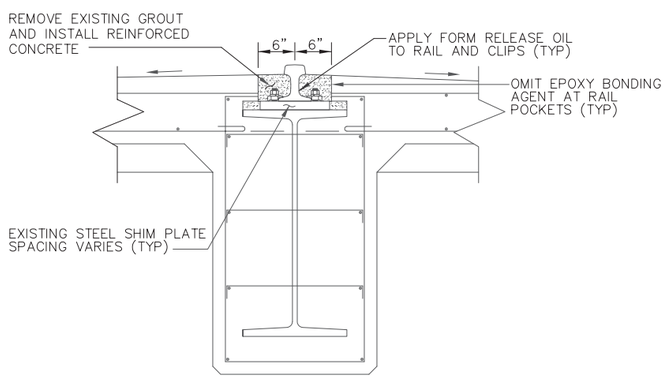

1 S8 S8 **RAIL POCKET DETAIL (TYP)**

1 1/2 0 1 2 3
(FEET)

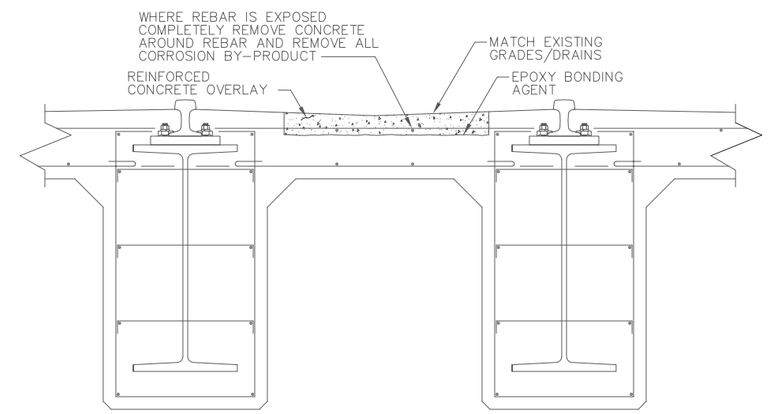

2 S8 S8 **DECK REPAIR DETAIL (TYP)**

1 1/2 0 1 2 3
(FEET)

NOTE:

1. DRAIN NOT SHOWN FOR DRAWING CLARITY.

DECK REPAIR PROCEDURE:

1. APPLY EPOXY BONDING AGENT TO HORIZONTAL AND VERTICAL SURFACES RECEIVING CONCRETE OVERLAY (EXCEPT AT RAIL POCKETS).
2. PLACE FIBER REINFORCED CONCRETE OVERLAY TO MATCH EXISTING GRADES AND TO DRAINS.
3. SEE SHEETS G3 AND S2 FOR ADDITIONAL NOTES.

Appledore Marine Engineering Inc.
800 STATE STREET, SUITE E
PORTSMOUTH, NEW HAMPSHIRE 03801
(603) 766-1870 amei@appledoremarine.com

DATE	DESCRIPTION	STM	APPR

NAVFAC

SEAL

SUBMITTED BY:
A/E FIRM NAME AND ADDRESS: APPLEDORE MARINE ENGINEERING, INC. 800 STATE STREET, SUITE E PORTSMOUTH NH, 03801
DSGN: CBS DRWN: GBS CHK: RMS
SUPV: CBS
PRJMGR. NJE CIV. STR.
MECH. ARCH.
ELEC.
SUBMITTED BY: V.P. 01/15/08
(SIGNED) (TITLE) (DATE)

APPROVALS:
APPROVED:
(CUSTOMER) (CODE) (DATE)
PROJECT MANAGER:
FIRE PROTECTION:
SPV. ENG.-ARCH:
SPV. ENG.-CIVIL:
SPV. ENG.-ELEC:
SPV. ENG.-MECH:
Q - FM & E:
APPROVED:
TEAD PWD-ME DATE

DEPARTMENT OF THE NAVY
~ NAVAL FACILITIES ENGINEERING COMMAND ~
NAVAL FACILITIES ENGINEERING COMMAND
NAVAL STATION - NORFOLK, VIRGINIA
IPT PORTSMOUTH NAVAL SHIPYARD KITTERY, ME.

MISCELLANEOUS REPAIRS TO BERTH 11 - TASK 10
DECK REPAIR DETAILS

CODE ID. NO. 80091 SIZE D
SCALE:
MAXIMO No.: XR7CR
JOB ORDER No.: N/A
SPEC. NO. 04-08-2513
CONSTR. CONTR. NO. N40085-08-C-2513
NAVFAC DRAWING NO. 12513408
SHEET 19 OF 26
SHEET NO. S8 PW-ME DRAWING NO. FP2-08-553

DRAWFORM REVISION: 11 APRIL 2007

FILE NAME: R:\TP-104A PNSY Lifting Study\11 Reference Information\2009 Berth 11 Repair Drawings\N40085-08-C-2513 ASBUILT DWGS\FP2-553.dwg LAYOUT NAME: Layout1 PLOTTED: Friday, December 12, 2014 - 8:43am

UNCLASSIFIED

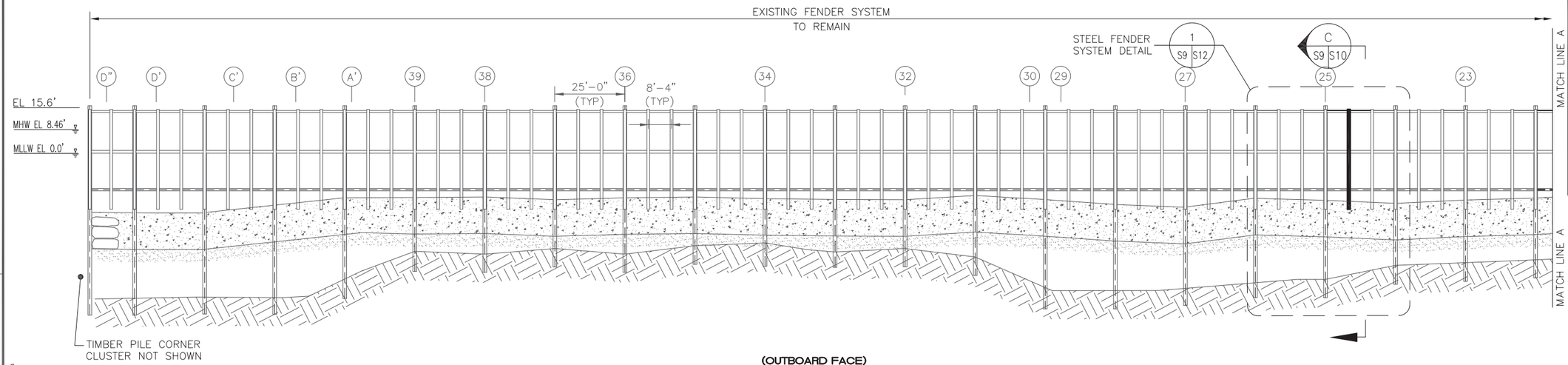

(OUTBOARD FACE)

BERTH 11 ELEVATION

20 10 0 20 40 60

(FEET)

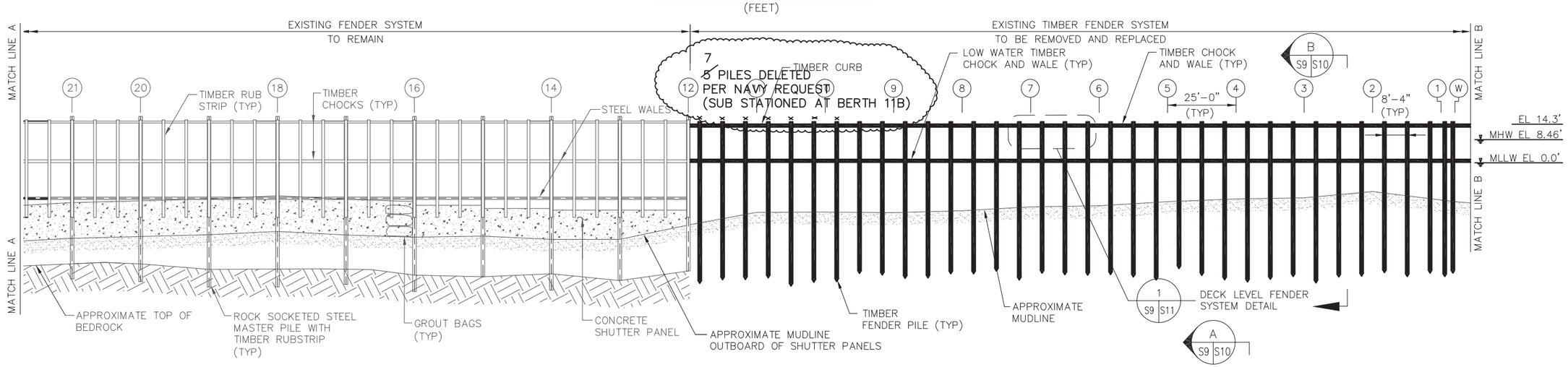

(OUTBOARD FACE)

BERTH 11 ELEVATION

20 10 0 20 40 60

(FEET)

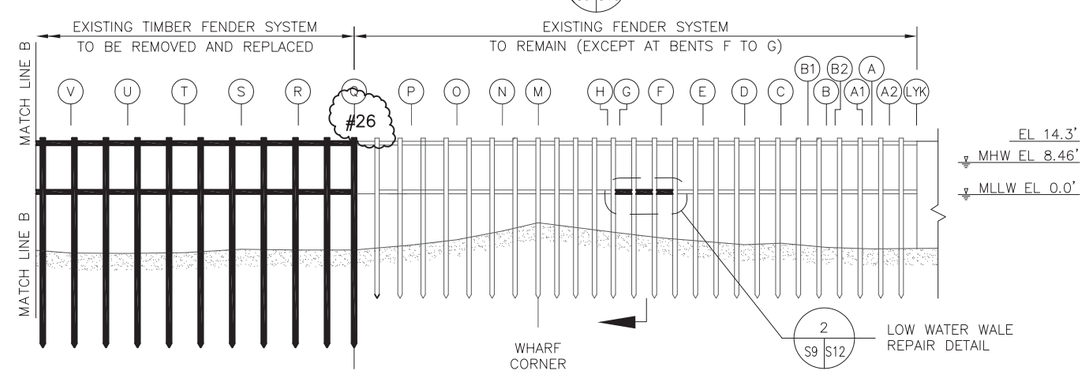

(OUTBOARD FACE)

BERTH 11 ELEVATION

20 10 0 20 40 60

(FEET)

LEGEND:

(15) PILE BENT DESIGNATION

NOTES:

1. DRAWING BASED ON PORTSMOUTH NAVAL SHIPYARD PUBLIC WORKS ARCHIVE DRAWINGS, UTILITY PLATES, AND LIMITED FIELD INVESTIGATION.
2. THERE IS SUBSTANTIAL CONSTRUCTION DEBRIS ALONG THE MUDLINE IN FRONT OF AND BEHIND THE CONCRETE SHUTTER PANELS. DEBRIS INCLUDES BUT IS NOT LIMITED TO: TIMBERS, ELECTRICAL CABLES, STAGING, BOULDERS AND MISCELLANEOUS METALS.
3. DEPTH OF EXISTING TIMBER FENDER SYSTEM IS SHOWN FOR SCHEMATIC PURPOSES.
4. REMOVE AND REINSTALL EXISTING ELECTRICAL CONDUIT FOR WARNING SIGNS TO THE OUTBOARD FACE OF THE TIMBER CURB. (6 LOCATIONS)
5. SEE SHEET G3 FOR BIDDING QUANTITIES.

Appledore Marine Engineering Inc.
800 STATE STREET, SUITE E
PORTSMOUTH, NEW HAMPSHIRE 03801
(603) 766-1870 ame@appledoremarine.com

STM	DESCRIPTION	DATE	APPR

NAVFAC

SEAL

SUBMITTED BY:
A/E FIRM NAME AND ADDRESS: APPLEDORE MARINE ENGINEERING, INC. 800 STATE STREET, SUITE E PORTSMOUTH NH, 03801
DSGN: CBS DRWN: GBS CHK: RMS
SUPV: CBS
PRJMGR. NJE CIV. STR.
MECH. ARCH.
ELEC.
SUBMITTED BY: V.P. 01/15/08
(SIGNED) (TITLE) (DATE)
APPROVALS:
APPROVED:
(CUSTOMER) (CODE) (DATE)
PROJECT MANAGER:
FIRE PROTECTION:
SPV. ENG.-ARCH:
SPV. ENG.-CIVIL:
SPV. ENG.-ELEC:
SPV. ENG.-MECH:
CI - PM & E:
APPROVED:
FEAD PWD-ME DATE

DEPARTMENT OF THE NAVY
~ NAVAL FACILITIES ENGINEERING COMMAND ~
NAVAL FACILITIES ENGINEERING COMMAND
NAVAL STATION - NORFOLK, VIRGINIA
KITTERY, ME.
IPT PORTSMOUTH NAVAL SHIPYARD

MISCELLANEOUS REPAIRS TO BERTH 11 - TASK 10 FENDER SYSTEM REPAIRS

CODE ID. NO. 80091 SIZE D
SCALE:
MAXIMO No.: XR7CR
JOB ORDER No.: N/A
SPEC. NO. 04-08-2513
CONSTR. CONTR. NO. N40085-08-C-2513
NAVFAC DRAWING NO. 12513409
SHEET 20 OF 26
SHEET NO. S9 PW-ME DRAWING NO. FP2-08-554

DRAWFORM REVISION: 11 APRIL 2007

FILE NAME: R:\TP-104A PNSY Lifting Study\11 Reference Information\2009 Berth 11 Repair Drawings\N40085-08-C-2513 ASBUILT DWGS\FP2-554.dwg LAYOUT NAME: Layout1 PLOTTED: Friday, December 12, 2014 - 8:44am

UNCLASSIFIED

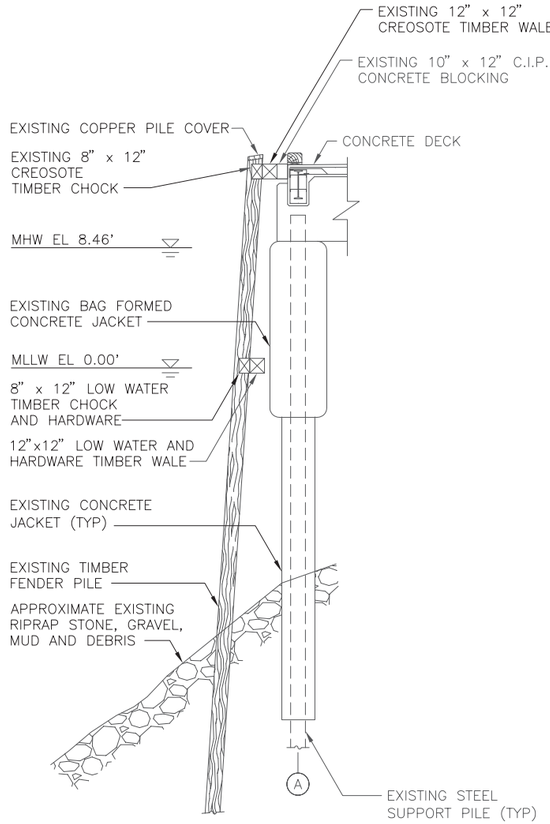

SECTION
BEMTS F TO G
A / S9 S10
4 2 0 4 8 12
(FEET)

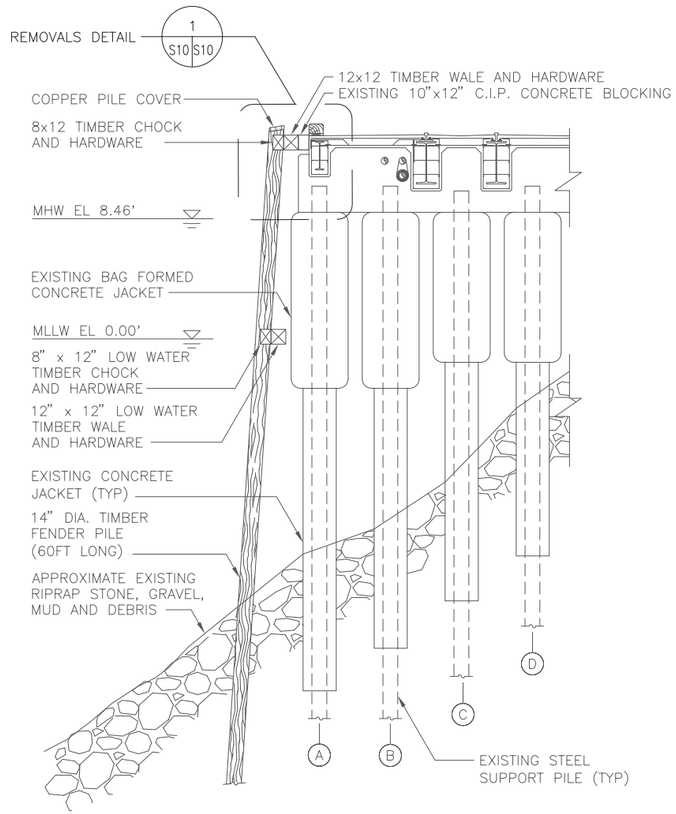

SECTION
BENTS Q TO 12
B / S9 S10
4 2 0 4 8 12
(FEET)

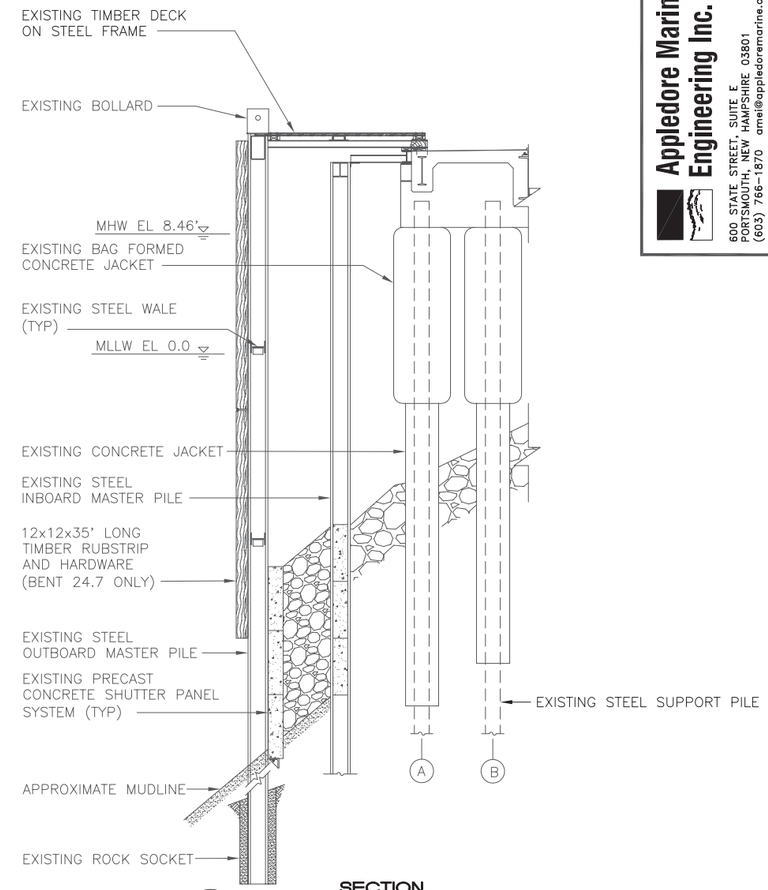

SECTION
BENTS 24 TO 25
C / S9 S10
4 2 0 4 8 12
(FEET)

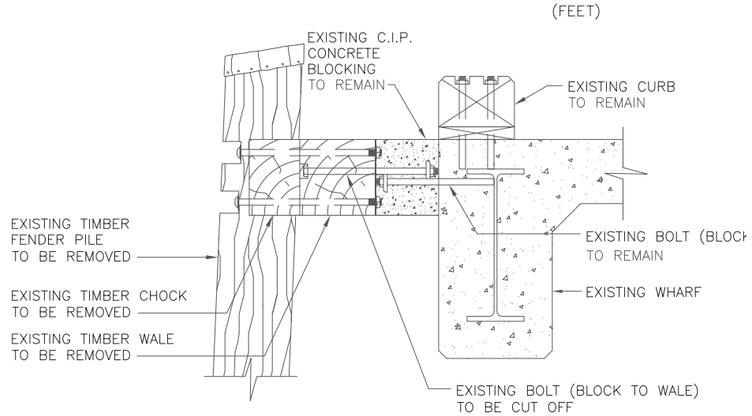

DETAIL
REMOVALS
1 / S10 S10
1 1/2 0 1 2 3
(FEET)

LEGEND:

(A) PILE DESIGNATION

NOTES:

1. DRAWING BASED ON PNSY PUBLIC WORKS ARCHIVE DRAWINGS AND FIELD MEASUREMENTS.
2. UNDER WHARF SLOPE CONTAINS DEBRIS NOT SHOWN INCLUDING, BUT NOT LIMITED TO, STEEL PIPE, REBAR, STRUCTURAL STEEL, CONCRETE RUBBLE, ELECTRICAL WIRING AND CONDUIT, ALUMINUM SCAFFOLDING, WIRE ROPE, BOULDERS AND CORD NETTING.
3. NOT ALL UTILITIES ARE DEPICTED.

Appledore Marine Engineering Inc.
800 STATE STREET, SUITE E
PORTSMOUTH, NEW HAMPSHIRE 03801
(603) 766-1870 amel@appledoremarine.com

SYM	DESCRIPTION	DATE	APPR

NAVFAC

SEAL

SUBMITTED BY:
A/E FIRM NAME AND ADDRESS: APPLEDORE MARINE ENGINEERING, INC. 800 STATE STREET, SUITE E PORTSMOUTH NH, 03801
DSGN: CBS DRWN: GBS CHK: RMS
SUPV: CBS
PRJMGR: NJE CIV. STR.
MECH. ARCH.
ELEC.
SUBMITTED BY: V.P. 01/15/08
(SIGNED) (TITLE) (DATE)

APPROVALS:
APPROVED:
(CUSTOMER) (CODE) (DATE)
PROJECT MANAGER:
FIRE PROTECTION:
SPV. ENG.-ARCH:
SPV. ENG.-CIVIL:
SPV. ENG.-ELEC:
SPV. ENG.-MECH:
CI - PM & E:
APPROVED:
TEAD PWD-ME DATE

DEPARTMENT OF THE NAVY
NAVAL FACILITIES ENGINEERING COMMAND
~ NAVAL FACILITIES ENGINEERING COMMAND ~
NAVAL STATION - NORFOLK, VIRGINIA
IPT PORTSMOUTH NAVAL SHIPYARD KITTERY, ME.

MISCELLANEOUS REPAIRS
TO BERTH 11 - TASK 10
FENDER SYSTEM REPAIR SECTIONS

CODE ID. NO. 80091 SIZE D
SCALE:
MAXIMO No.: XR7CR
JOB ORDER No.: N/A
SPEC. NO. 04-08-2513
CONSTR. CONTR. NO. N40085-08-C-2513
NAVFAC DRAWING NO. 12513410
SHEET 21 OF 26
SHEET NO. S10 PW-ME DRAWING NO. FP2-08-555

DRAWFORM REVISION: 11 APRIL 2007

FILE NAME: R:\TP-104A PNSY Lifting Study\11 Reference Information\2009 Berth 11 Repair Drawings\N40085-08-C-2513 ASBUILT DWGS\FP2-555.dwg LAYOUT NAME: Layout1 PLOTTED: Friday, December 12, 2014 - 8:45am

UNCLASSIFIED

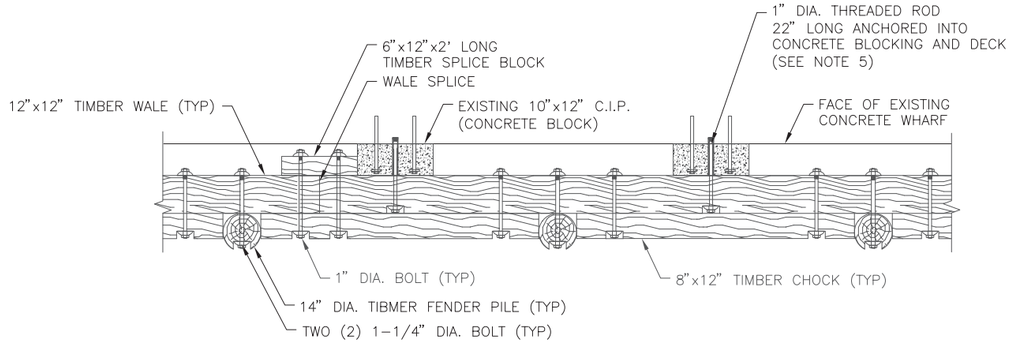

1 S9 S11 **DETAIL**
DECK LEVEL FENDER SYSTEM
2 1 0 2 4 6
(FEET)

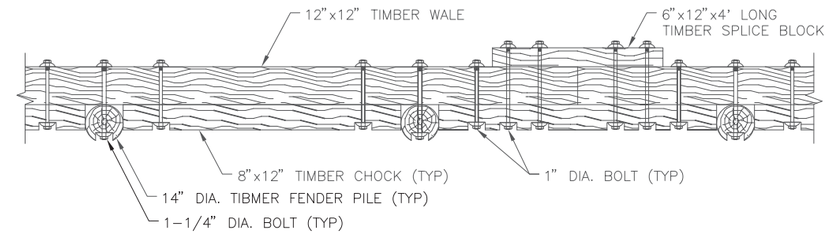

2 S1 S5 **DETAIL**
LOW WATER FENDER SYSTEM
2 1 0 2 4 6
(FEET)

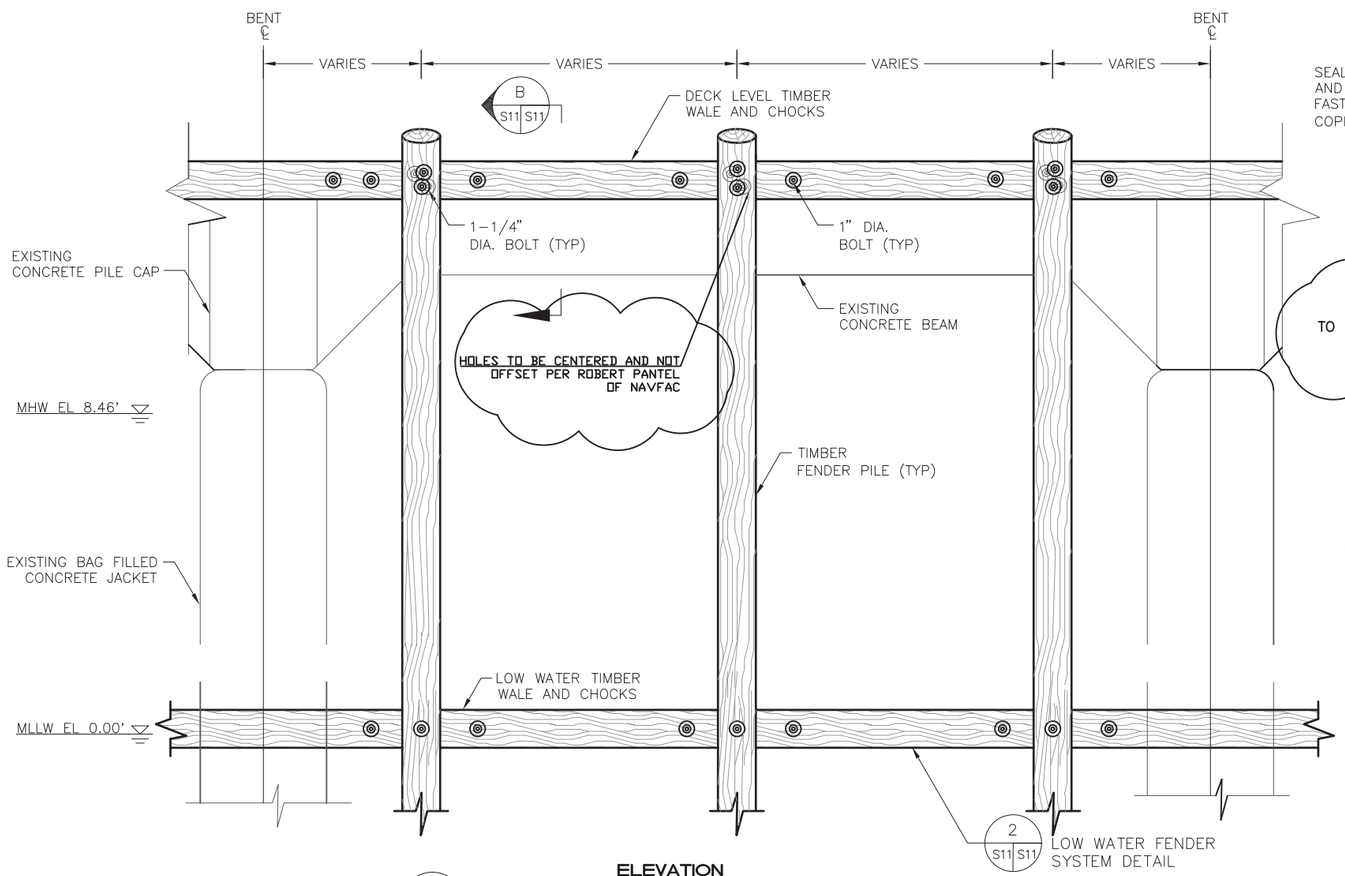

A S11 S11 **ELEVATION**
TIMBER FENDER SYSTEM (TYP)
2 1 0 2 4 6
(FEET)

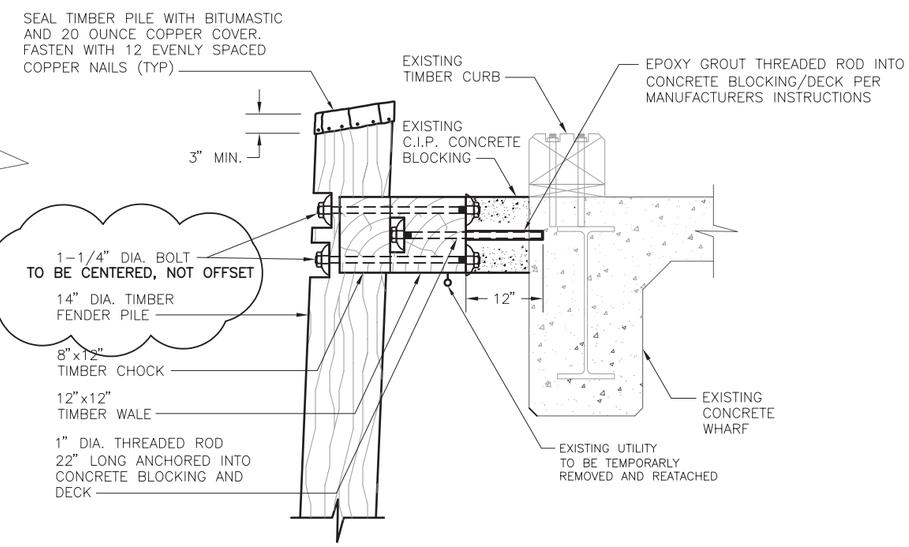

NOTE: EXISTING C.I.P. CONCRETE BLOCKING FASTENERS ARE NOT SHOWN FOR DRAWING CLARITY.

B S11 S11 **SECTION**
COPPER PILE COVER
1 1/2 0 1 2 3
(FEET)

NOTES:

1. DRAWING BASED ON PNSY PUBLIC WORKS ARCHIVE DRAWINGS AND FIELD MEASUREMENTS.
2. COPPER PILE COVERS NOT SHOWN.
3. FENDER SYSTEM DETAILS SHOWN APPLICABLE FROM PILE BENTS 12 TO LYK.
4. UTILITIES ARE NOT DEPICTED.
5. INSTALL THREADED ROD NEAR BLOCKING CENTER. PLACE TO AVOID INTERFERENCES.
6. SEE SHEET G3 FOR TIMBER FENDER SYSTEM NOTES.

Appledore Marine Engineering Inc.
600 STATE STREET, SUITE E
PORTSMOUTH, NEW HAMPSHIRE 03801
(603) 766-1870 amei@appledoremarine.com

SYM	DESCRIPTION	DATE	APPR

SEAL

SUBMITTED BY:
A/E FIRM NAME AND ADDRESS: APPLEDORE MARINE ENGINEERING, INC. 600 STATE STREET, SUITE E PORTSMOUTH, NH. 03801
DSGN: CBS DRWN: GBS CHK: RMS
SUPV: CBS
PR/MGR. NJE CIV. STR.
MECH. ARCH.
ELEC.
SUBMITTED BY: V.P. 01/15/08
(SIGNED) (TITLE) (DATE)

APPROVALS:
APPROVED:
(CUSTOMER) (CODE) (DATE)
PROJECT MANAGER:
FIRE PROTECTION:
SPV. ENG.-ARCH:
SPV. ENG.-CIVIL:
SPV. ENG.-ELEC:
SPV. ENG.-MECH:
O - PM & E:
APPROVED:
FEAD PWD-ME DATE

DEPARTMENT OF THE NAVY
~ NAVAL FACILITIES ENGINEERING COMMAND ~
NAVAL FACILITIES ENGINEERING COMMAND
NAVAL STATION - NORFOLK, VIRGINIA
IPT PORTSMOUTH NAVAL SHIPYARD KITTERY, ME.

MISCELLANEOUS REPAIRS TO BERTH 11 - TASK 10
FENDER SYSTEM REPAIR DETAILS

CODE ID. NO. 80091 SIZE D
SCALE:
MAXIMO No.: XR7CR
JOB ORDER No.: N/A
SPEC. NO. 04-08-2513
CONSTR. CONTR. NO. N40085-08-C-2513
NAVFAC DRAWING NO. 12513411
SHEET 22 OF 26
SHEET NO. S11 PW-ME DRAWING NO. FP2-08-556

DRAWFORM REVISION: 11 APRIL 2007

FILE NAME: R:\TP-104A PNSY Lifting Study\11 Reference Information\2009 Berth 11 Repair Drawings\N40085-08-C-2513 ASBUILT DWGS\FP2-556.dwg LAYOUT NAME: Layout1 PLOTTED: Friday, December 12, 2014 - 8:46am

UNCLASSIFIED