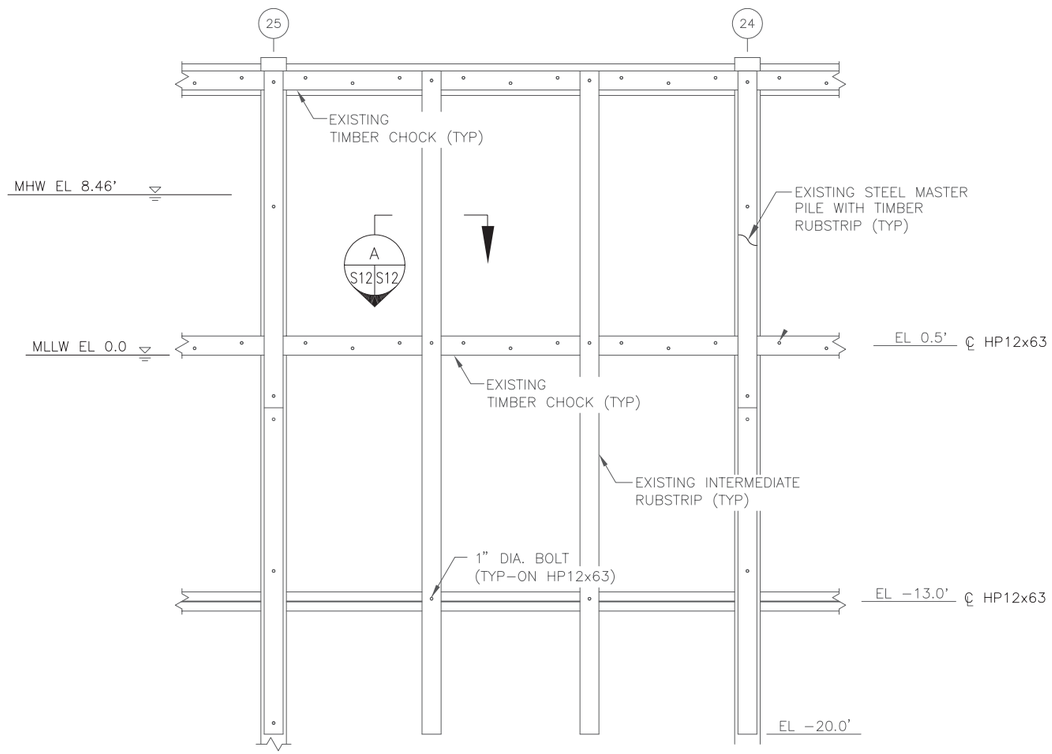

1 S9 S12 **DETAIL**
STEEL FENDER SYSTEM
4 2 0 4 8 12
(FEET)

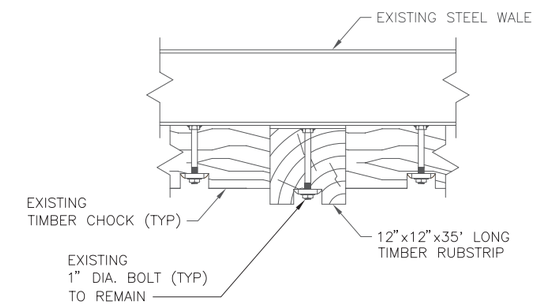

A S12 S12 **SECTION**
TIMBER RUBSTRIP REPAIR
1 .5 0 1 2 3
(FEET)

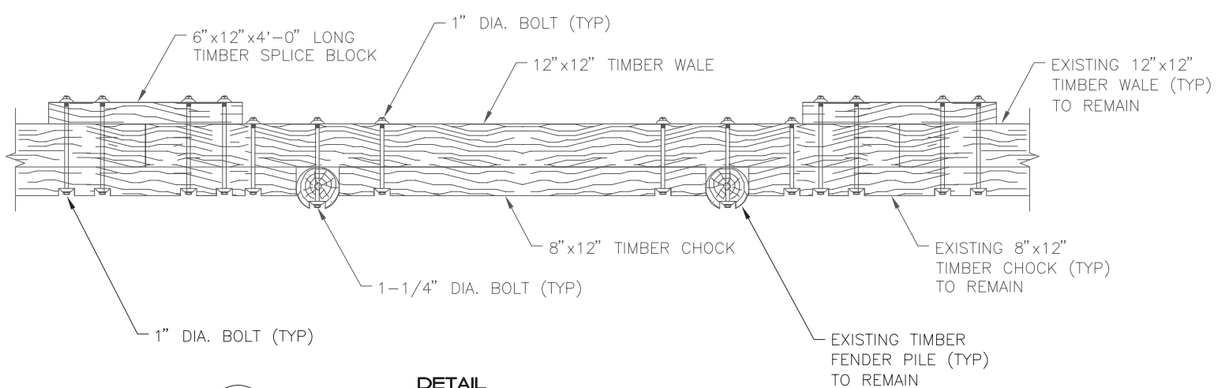

2 S10 S13 **DETAIL**
LOW WATER WALE REPAIR
2 1 0 2 4 6
(FEET)

Appledore Marine Engineering Inc.
600 STATE STREET, SUITE E
PORTSMOUTH, NEW HAMPSHIRE 03801
(603) 766-1870 amel@appledoremarine.com

SYM	DESCRIPTION	DATE	APPR

SEAL

SUBMITTED BY:
A/E FIRM NAME AND ADDRESS: APPLEDORE MARINE ENGINEERING, INC. 600 STATE STREET, SUITE E PORTSMOUTH NH, 03801
DSGN: CBS DRWN: GBS CHK: RMS
SUPV: CBS
PR/MGR. NJE CIV. STR.
MECH. ARCH.
ELEC.
SUBMITTED BY: V.P. 01/15/08
(SIGNED) (TITLE) (DATE)

APPROVALS:
APPROVED:
(CUSTOMER) (CODE) (DATE)
PROJECT MANAGER:
FIRE PROTECTION:
SPV. ENG.-ARCH:
SPV. ENG.-CIVIL:
SPV. ENG.-ELEC:
SPV. ENG.-MECH:
CI - PM & E:
APPROVED:
FEAD PWD-ME DATE

DEPARTMENT OF THE NAVY
~ NAVAL FACILITIES ENGINEERING COMMAND ~
NAVAL FACILITIES ENGINEERING COMMAND
~ NAVAL STATION - NORFOLK, VIRGINIA
IPT PORTSMOUTH NAVAL SHIPYARD KITTERY, ME.

MISCELLANEOUS REPAIRS
TO BERTH 11 - TASK 10
FENDER SYSTEM REPAIRS DETAILS 2

CODE ID. NO. 80091 SIZE D
SCALE:
MAXIMO No.: XR7CR
JOB ORDER No.: N/A
SPEC. NO. 04-08-2513
CONSTR. CONTR. NO. N40085-08-C-2513
NAVFAC DRAWING NO. 12513412
SHEET 23 OF 26
SHEET NO. S12 PW-ME DRAWING NO. FP2-08-557

DRAWFORM REVISION: 11 APRIL 2007

FILE NAME: R:\TP-1044 PNSY Lifting Study\11 Reference Information\2009 Berth 11 Repair Drawings\N40085-08-C-2513 ASBUILT DWGS\FP2-557.dwg LAYOUT NAME: Layout1 PLOTTED: Friday, December 12, 2014 - 8:47am

UNCLASSIFIED

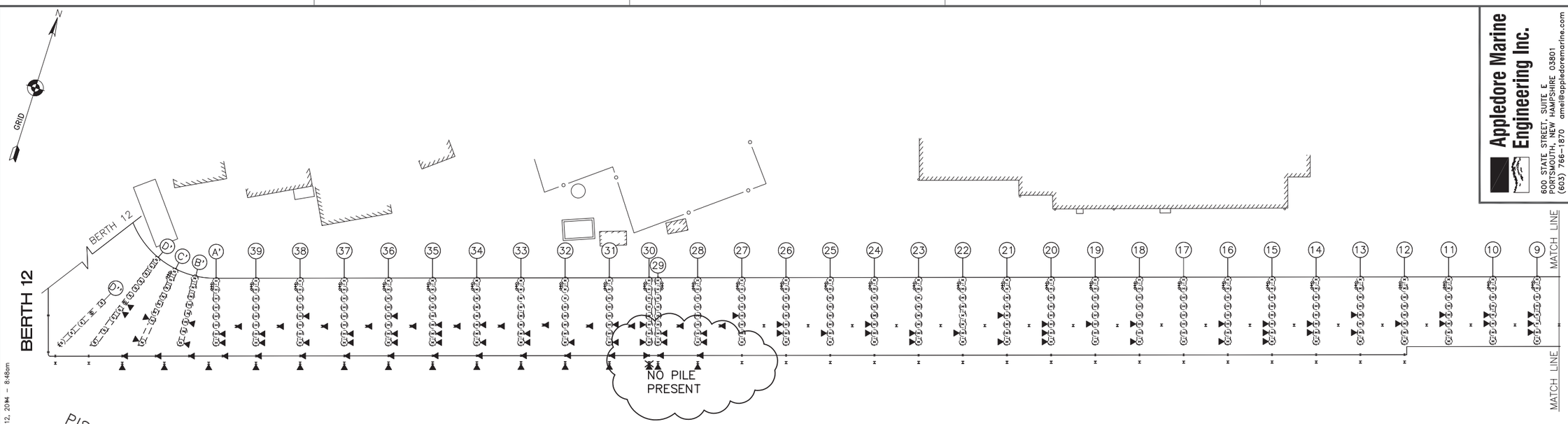

BERTH 11
CORROSION PROTECTION PLAN

30 15 0 30 60 90
(FEET)

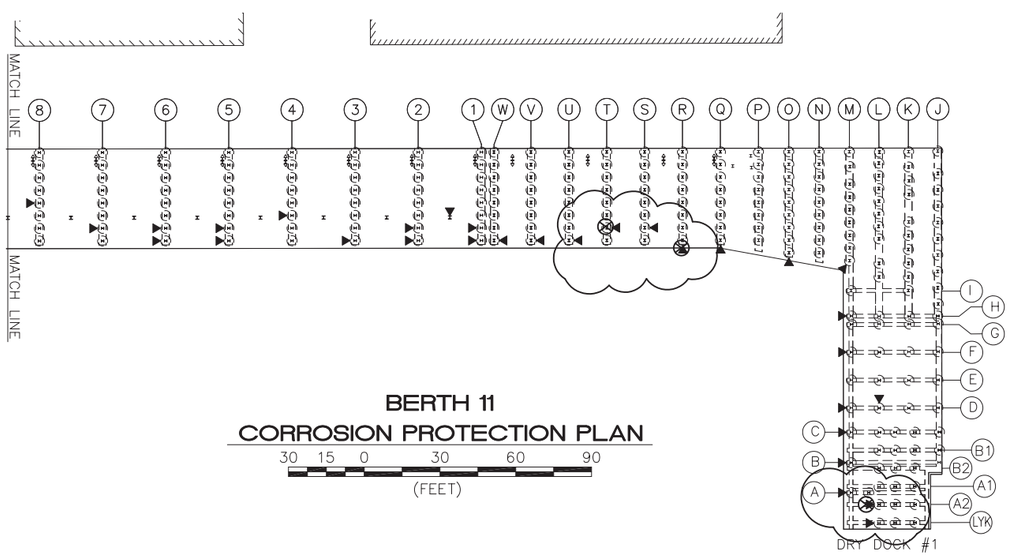

BERTH 11
CORROSION PROTECTION PLAN

30 15 0 30 60 90
(FEET)

BERTH 11 ANODE QUANTITIES		
LOCATION	QTY	
SUPPORT PILE	~~97~~	94
MIDSPAN PILE	13	
INBOARD MASTER PILE	32	
OUTBOARD MASTER PILE	~~15~~	14

LEGEND:

- (36) — EXISTING PILE BENT LOCATION
- EXISTING SUPPORT PILE
- SUPPORT PILE TO RECEIVE ANODE
- MASTER PILE AND/OR MIDSPAN PILE TO RECEIVE ANODE
- ⊗ ANODE NOT INSTALLED PER A&E/NAVFAC

Appledore Marine Engineering Inc.
600 STATE STREET, SUITE E
PORTSMOUTH, NEW HAMPSHIRE 03801
(603) 766-1870 amei@appledoremarine.com

SYM	DESCRIPTION	DATE	APPR

NAVFAC

SEAL

SUBMITTED BY:
A/E FIRM NAME AND ADDRESS: APPLEDORE MARINE ENGINEERING, INC. 600 STATE STREET, SUITE E PORTSMOUTH NH, 03801
DSGN: CBS DRWN: CBS CHK: RMS
SUPV: CBS
PRJMGR. NJE CIV. STR.
MECH. ARCH.
ELEC.
SUBMITTED BY: V.P. 01/15/08
(SIGNED) (TITLE) (DATE)

APPROVALS:
APPROVED:
(CUSTOMER) (CODE) (DATE)
PROJECT MANAGER:
FIRE PROTECTION:
SPV. ENG.-ARCH:
SPV. ENG.-CIVIL:
SPV. ENG.-ELEC:
SPV. ENG.-MECH:
CI - PM & E:
APPROVED:
FEAD PWD-ME DATE

DEPARTMENT OF THE NAVY
~ NAVAL FACILITIES ENGINEERING COMMAND ~
NAVAL FACILITIES ENGINEERING COMMAND ~
NAVAL STATION - NORFOLK, VIRGINIA
IPT PORTSMOUTH NAVAL SHIPYARD KITTERY, ME.

MISCELLANEOUS REPAIRS
TO BERTH 11 - TASK 10
CORROSION PROTECTION PLAN

CODE ID. NO. 80091 SIZE D
SCALE:
MAXIMO No.: XR7CR
JOB ORDER No.: N/A
SPEC. NO. 04-08-2513
CONSTR. CONTR. NO. N40085-08-C-2513
NAVFAC DRAWING NO. 12513413
SHEET 24 OF 26
SHEET NO. CP1 PW-ME DRAWING NO. FP2-08-558

DRAWFORM REVISION: 11 APRIL 2007

FILE NAME: R:\TP-1044 PNSY Lifting Study\11 Reference Information\2009 Berth 11 Repair Drawings\N40085-08-C-2513 ASBUILT DWGS\FP2-558.dwg LAYOUT NAME: Layout1 PLOTTED: Friday, December 12, 2014 - 8:48am

UNCLASSIFIED

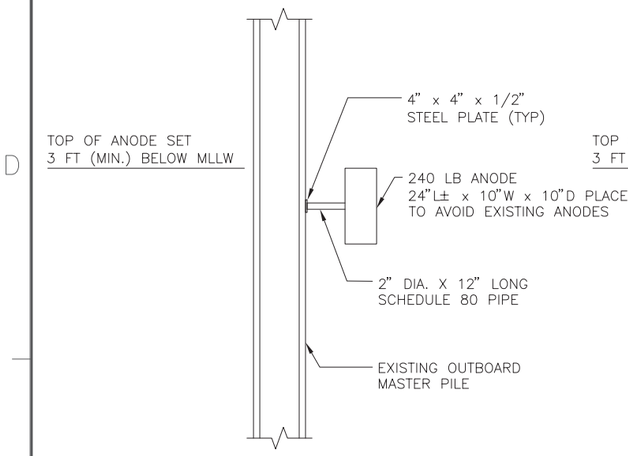

OUTBOARD MASTER PILE

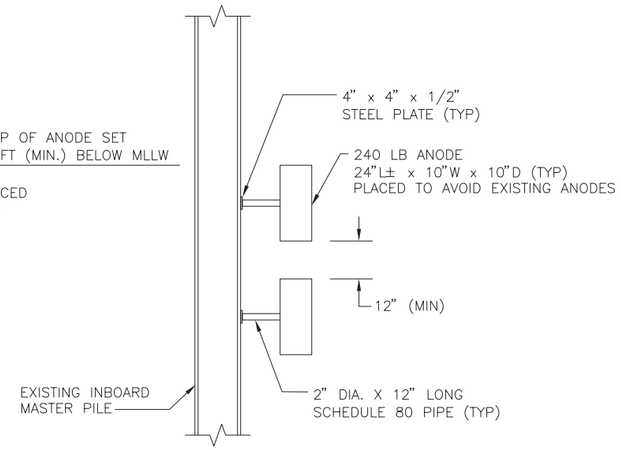

INBOARD MASTER PILE

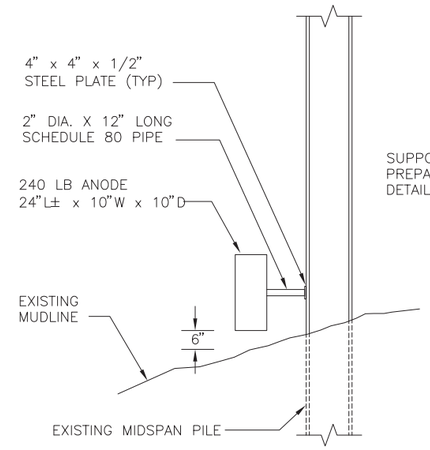

MIDSPAN PILE

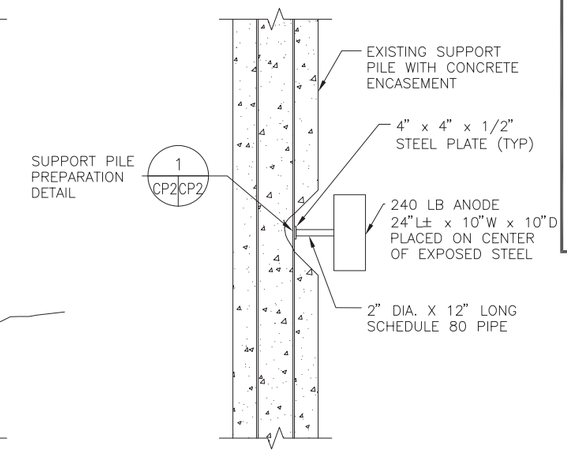

SUPPORT PILE

1 CP5 CP7

DETAILS
ANODES

2 1 0 2 4 6
(FEET)

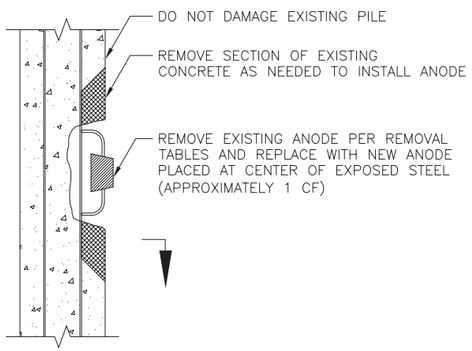

1 CP2 CP2

DETAIL
SUPPORT PILE REMOVAL/REPLACMENT

2 1 0 2 4 6
(FEET)

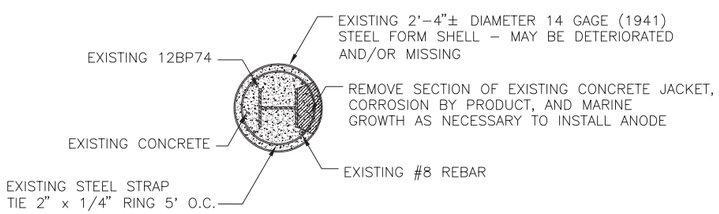

A CP2 CP2

SECTION
SUPPORT PILE CONCRETE JACKET REMOVAL

2 1 0 2 4 6
(FEET)

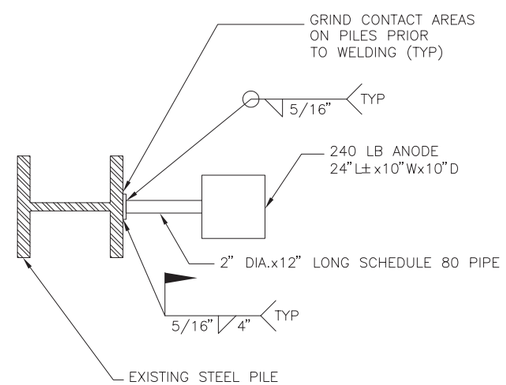

PLAN
ANODE AND PLATE CONNECTION DETAIL

1 1/2 0 1 2 3
(FEET)

NOTE:

1. CONTRACTOR MAY CHANGE ORIENTATION OF ANODE TO FACILITATE IN THE INSTALLATION OF THE ANODE.

Appledore Marine Engineering Inc.
600 STATE STREET, SUITE E
PORTSMOUTH, NEW HAMPSHIRE 03801
(603) 766-1870 amei@appledoremarine.com

SYM	DESCRIPTION	DATE	APPR

NAVFAC

SEAL

SUBMITTED BY:
A/E FIRM NAME AND ADDRESS: APPLEDORE MARINE ENGINEERING, INC. 600 STATE STREET, SUITE E PORTSMOUTH NH, 03801
DSGN: CBS DRWN: GBS CHK: RMS
SUPV: CBS
PRJMGR: NJE CIV. STR.
MECH. ARCH.
ELEC.
SUBMITTED BY: V.P. 01/15/08
(SIGNED) (TITLE) (DATE)

APPROVALS:
APPROVED:
(CUSTOMER) (CODE) (DATE)
PROJECT MANAGER:
FIRE PROTECTION:
SPV. ENG.-ARCH:
SPV. ENG.-CIVIL:
SPV. ENG.-ELEC:
SPV. ENG.-MECH:
CI - PW & E:
APPROVED:
TEAD PWD-ME DATE

DEPARTMENT OF THE NAVY
~ NAVAL FACILITIES ENGINEERING COMMAND ~
NAVAL FACILITIES ENGINEERING COMMAND
NAVAL STATION - NORFOLK, VIRGINIA
IPT PORTSMOUTH NAVAL SHIPYARD KITTERY, ME.

MISCELLANEOUS REPAIRS TO BERTH 11 - TASK 10
CORROSION PROTECTION DETAILS

CODE ID. NO. 80091 SIZE D
SCALE:
MAXIMO No.: XR7CR
JOB ORDER No.: N/A
SPEC. NO. 04-08-2513
CONSTR. CONTR. NO. N40085-08-C-2513
NAVFAC DRAWING NO. 12513414
SHEET 25 OF 26
SHEET NO. CP2 PW-ME DRAWING NO. FP2-08-559

DRAWFORM REVISION: 11 APRIL 2007

FILE NAME: R:\TP-104A PNSY Lifting Study\11 Reference Information\2009 Berth 11 Repair Drawings\N40085-08-C-2513 ASBUILT DWGS\FP2-559.dwg LAYOUT NAME: Layout1 PLOTTED: Friday, December 12, 2014 - 8:49am

UNCLASSIFIED

SUPPORT PILE AND MIDSPAN PILE INFORMATION TABLE

BENT	ROW	PILE TYPE	ANODES TO INSTALL	REMOVE EXISTING ANODE	PARTIAL CONCRETE REMOVAL
LYK	A	SUPPORT	1	NO	YES
A2	A	SUPPORT	1	NO	NO
A	A	SUPPORT	1	NO	NO
B	A	SUPPORT	1	YES	NO
C	A	SUPPORT	1	NO	YES
D	A	SUPPORT	1	YES	NO
D	B	SUPPORT	1	NO	NO
F	A	SUPPORT	1	YES	NO
H	A	SUPPORT	1	YES	YES
M	A	SUPPORT	1	YES	YES
O	A	SUPPORT	1	YES	YES
Q	A	SUPPORT	1	YES	YES
R	A	SUPPORT	1	NO	NO
S	B	SUPPORT	1	YES	NO
T	B	SUPPORT	1	NO	NO
U	A	SUPPORT	1	YES	NO
V	A	SUPPORT	1	NO	NO
W	A	SUPPORT	1	YES	NO
1	A	SUPPORT	1	YES	NO
1	B	SUPPORT	1	NO	NO
1 TO 2	–	MIDSPAN	1	YES	NO
2	A	SUPPORT	1	YES	NO
2	B	SUPPORT	1	NO	NO
3	A	SUPPORT	1	YES	NO
4	C	SUPPORT	1	NO	NO
5	A	SUPPORT	1	YES	NO
5	B	SUPPORT	1	NO	NO
6	A	SUPPORT	1	YES	NO
6	B	SUPPORT	1	NO	NO
7	B	SUPPORT	1	NO	NO
8	D	SUPPORT	1	NO	NO
9	B	SUPPORT	1	NO	NO
9	C	SUPPORT	1	NO	YES
9	D	SUPPORT	1	NO	YES
10	C	SUPPORT	1	NO	NO
10	D	SUPPORT	1	NO	NO
11	C	SUPPORT	1	NO	NO
11	D	SUPPORT	1	NO	NO
12	C	SUPPORT	1	YES	NO
13	B	SUPPORT	1	NO	NO
13	D	SUPPORT	1	NO	~~NO~~ YES
14	B	SUPPORT	1	NO	NO
14	C	SUPPORT	1	NO	~~NO~~ YES
15	A	SUPPORT	1	YES	NO
15	B	SUPPORT	1	NO	~~NO~~ YES
15	C	SUPPORT	1	NO	NO
16	A	SUPPORT	1	YES	NO
16	C	SUPPORT	1	NO	NO
18	A	SUPPORT	1	NO	NO
18	C	SUPPORT	1	NO	~~NO~~ YES
19	C	SUPPORT	1	NO	NO
20	A	SUPPORT	1	YES	NO
20	B	SUPPORT	1	NO	~~NO~~ YES
20	C	SUPPORT	1	NO	~~NO~~ YES
21	A	SUPPORT	1	YES	NO
21	D	SUPPORT	1	NO	YES

NONE INSTALLED PER A&E/NAVFAC

NONE INSTALLED PER A&E/NAVFAC

NONE INSTALLED PER A&E/NAVFAC

YES PER RFI #19

YES PER RFI #19

YES PER RFI #19
YES PER RFI #19

SUPPORT PILE AND MIDSPAN PILE INFORMATION TABLE

BENT	ROW	PILE TYPE	ANODES TO INSTALL	REMOVE EXISTING ANODE	PARTIAL CONCRETE REMOVAL
22	B	SUPPORT	1	NO	NO
23	A	SUPPORT	1	YES	NO
23	B	SUPPORT	1	NO	NO
24	B	SUPPORT	1	NO	NO
24	C	SUPPORT	1	NO	NO
25	B	SUPPORT	1	NO	NO
26	B	SUPPORT	1	NO	NO
26	C	SUPPORT	1	NO	NO
27	D	SUPPORT	1	NO	~~NO~~ YES
27 TO 28	–	MIDSPAN	1	YES	NO
28	A	SUPPORT	1	YES	NO
28	B	SUPPORT	1	NO	NO
28 TO 29	–	MIDSPAN	1	YES	NO
29	A	SUPPORT	1	YES	NO
29	B	SUPPORT	1	NO	NO
30	A	SUPPORT	1	YES	NO
30	C	SUPPORT	1	NO	NO
30 TO 31	–	MIDSPAN	1	YES	NO
31	A	SUPPORT	1	YES	NO
31	C	SUPPORT	1	NO	~~NO~~ YES
31 TO 32	–	MIDSPAN	1	YES	NO
32	A	SUPPORT	1	NO	NO
32 TO 33	–	MIDSPAN	1	YES	NO
33	A	SUPPORT	1	YES	NO
33	B	SUPPORT	1	NO	NO
33 TO 34	–	MIDSPAN	1	YES	NO
34	A	SUPPORT	1	YES	NO
34	C	SUPPORT	1	NO	~~NO~~ YES
34 TO 35	–	MIDSPAN	1	YES	NO
35	A	SUPPORT	1	YES	NO
35	B	SUPPORT	1	NO	~~NO~~ YES
35	C	SUPPORT	1	NO	NO
35 TO 36	–	MIDSPAN	1	YES	NO
36	A	SUPPORT	1	YES	NO
36	B	SUPPORT	1	NO	NO
36	D	SUPPORT	1	NO	~~NO~~ YES
36 TO 37	–	MIDSPAN	1	YES	NO
37	A	SUPPORT	1	YES	NO
37	B	SUPPORT	1	NO	NO
37 TO 38	–	MIDSPAN	1	YES	NO
38	A	SUPPORT	1	YES	NO
38	D	SUPPORT	1	NO	~~NO~~ YES
38 TO 39	–	MIDSPAN	1	YES	NO
39	A	SUPPORT	1	YES	YES
39	B	SUPPORT	1	NO	NO
39 TO A'	–	MIDSPAN	1	YES	NO
A'	A	SUPPORT	1	YES	NO
A'	B	SUPPORT	1	NO	NO
B'	A	SUPPORT	1	NO	NO
B'	C	SUPPORT	1	NO	~~NO~~ YES
C'	A	SUPPORT	1	YES	NO
C'	B	SUPPORT	1	NO	NO
D'	D	SUPPORT	1	YES	NO
D'	E	SUPPORT	1	NO	NO

NO PILE EXISTS

MASTER PILE INFORMATION TABLE

BENT	ROW	PILE TYPE	ANODES TO INSTALL
28	OUT	MASTER	1
28	IN	MASTER	2
29	OUT	MASTER	1
29	IN	MASTER	2
30	OUT	MASTER	1
30	IN	MASTER	2
31	OUT	MASTER	1
31	IN	MASTER	2
32	OUT	MASTER	1
32	IN	MASTER	2
33	OUT	MASTER	1
33	IN	MASTER	2
34	OUT	MASTER	1
34	IN	MASTER	2
35	OUT	MASTER	1
35	IN	MASTER	2
36	OUT	MASTER	1
36	IN	MASTER	2
37	OUT	MASTER	1
37	IN	MASTER	2
38	OUT	MASTER	1
38	IN	MASTER	2
39	OUT	MASTER	1
39	IN	MASTER	2
A'	OUT	MASTER	1
A'	IN	MASTER	2
B'	IN	MASTER	2
B' TO C'	OUT	MASTER	1
B' TO C'	IN	MASTER	2
C' TO D'	OUT	MASTER	1
C' TO D'	IN	MASTER	2

MASTER PILE INFORMATION TABLE

SUPPORT AND MIDSPAN PILE INFORMATION TABLE

Appledore Marine Engineering Inc.
600 STATE STREET, SUITE E
PORTSMOUTH, NEW HAMPSHIRE 03801
(603) 766-1870 amei@appledoremarine.com

SYM	DESCRIPTION	DATE	APPR

SEAL

SUBMITTED BY:
A/E FIRM NAME AND ADDRESS: APPLEDORE MARINE ENGINEERING, INC. 600 STATE STREET, SUITE E PORTSMOUTH NH, 03801
DSGN: CBS DRWN: GBS CHK: RMS
SUPV: CBS
PR/MGR. NJE CIV. STR.
MECH. ARCH.
ELEC.
SUBMITTED BY: V.P. 01/15/08
(SIGNED) (TITLE) (DATE)

APPROVALS:
APPROVED:
(CUSTOMER) (CODE) (DATE)
PROJECT MANAGER:
FIRE PROTECTION:
SPV. ENG.-ARCH:
SPV. ENG.-CIVIL:
SPV. ENG.-ELEC:
SPV. ENG.-MECH:
O - PW & E:
APPROVED:
FEAD PWD-ME DATE

DEPARTMENT OF THE NAVY
NAVAL FACILITIES ENGINEERING COMMAND
~ NAVAL FACILITIES ENGINEERING COMMAND ~
NAVAL STATION - NORFOLK, VIRGINIA
IPT PORTSMOUTH NAVAL SHIPYARD KITTERY, ME.

MISCELLANEOUS REPAIRS
TO BERTH 11 - TASK 10
ANODE SCHEDULE

CODE ID. NO. 80091 SIZE D
SCALE:
MAXIMO No.: XR7CR
JOB ORDER No.: N/A
SPEC. NO. 04-08-2513
CONSTR. CONTR. NO. N40085-08-C-2513
NAVFAC DRAWING NO. 12513415
SHEET 26 OF 26
SHEET NO. CP3 PW-ME DRAWING NO. FP2-08-560

DRAWFORM REVISION: 11 APRIL 2007

FILE NAME: R:\TP-104A PNSY Lifting Study\11 Reference Information\2009 Berth 11 Repair Drawings\N40085-08-C-2513 ASBUILT DWGS\FP2-560.dwg LAYOUT NAME: Layout1 PLOTTED: Friday, December 12, 2014 - 8:50am

UNCLASSIFIED

PORTSMOUTH NAVAL SHIPYARD
KITTERY, ME

REPLACE UTILITIES
TO BERTHS 11 AND 12

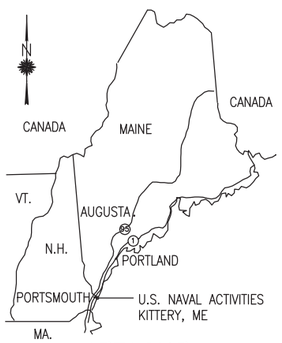

AREA MAP

0 20 40 60 100

SCALE: MILES

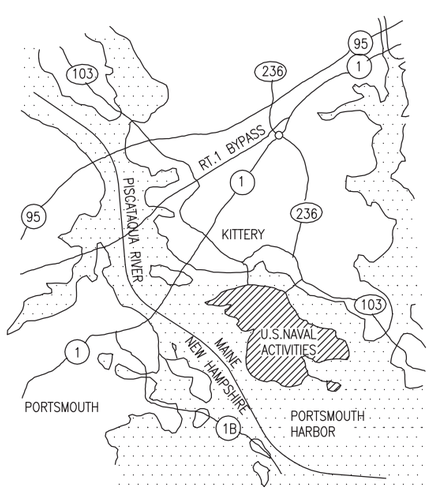

VICINITY MAP

0 500 1000

SCALE: YARDS

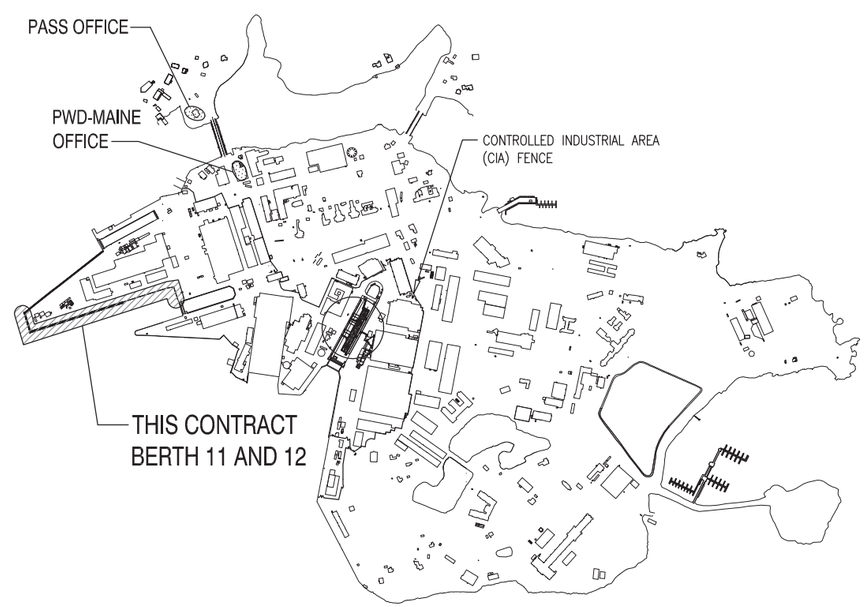

SITE MAP

SCALE: 1"=600'

ELEVATION, SECTION OR DETAIL SYMBOLS

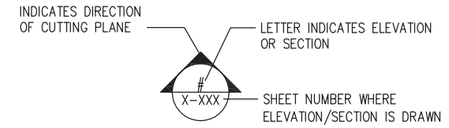

ELEVATION OR SECTION

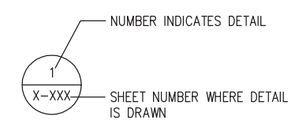

DETAIL

SYM	DESCRIPTION	DATE	APPR

NAVFAC

COMMONWEALTH OF MASSACHUSETTS — VICTOR M. GOVONI — CIVIL — No. 41732 — REGISTERED PROFESSIONAL ENGINEER

SEAL

ENGINEERS FST Since 1914

FAY, SPOFFORD & THORNDIKE
5 BURLINGTON WOODS
BURLINGTON, MA 01803

A/E INFO

APPROVED

FOR COMMANDER NAVFAC

ACTIVITY

SATISFACTORY TO DATE

DES HBF | DRW HBF | CHK DMD

PWD-ME DM/POC MIKE McCANN

BRANCH MANAGER

CHIEF ENG/ARCH

FIRE PROTECTION

DEPARTMENT OF THE NAVY
NAVAL FACILITIES ENGINEERING COMMAND
PUBLIC WORKS DEPARTMENT – MAINE

NAVAL FACILITIES ENGINEERING COMMAND ~ MID-ATLANTIC
NAVAL SHIPYARD ~ PORTSMOUTH, NH

PORTSMOUTH NAVAL SHIPYARD

KITTERY, MAINE

REPLACE UTLITIES
BERTHS 11 AND 12

COVER SHEET

MAXIMO No.: 5918670

EPROJECT NO.: 1171704

CONSTR. CONTR. NO.

NAVFAC DRAWING NO.
12650001

SHEET 1 OF 57

G-001 | FP2-13-587

DRAWFORM REVISION: 10 MARCH 2009

FILE NAME: U:\B0-216K\CADD\General\B0-216K-G-001.dwg LAYOUT NAME: G-001 PLOTTED: Tuesday, June 25, 2013 - 10:33am USER: Fiber_JH

NUMBER	DISCIPLINE NUMBER	NAVFAC DRAWING NUMBER	PWD-ME DRAWING NUMBER	DESCRIPTION
GENERAL				
1	G-001	12650001	FP2-13-587	COVER SHEET
2	G-002	12650002	FP2-13-588	INDEX SHEET
3	G-101	12650003	FP2-13-589	EXISTING CONDITIONS – BERTH 12
4	G-102	12650004	FP2-13-590	EXISTING CONDITIONS – BERTH 11 WEST
5	G-103	12650005	FP2-13-591	EXISTING CONDITIONS – BERTH 11 EAST
6	G-301	12650006	FP2-13-592	EXISTING TYPICAL WHARF SECTIONS BERTH 11
CIVIL				
7	C-001	12650007	FP2-13-593	GENERAL NOTES, LEGEND AND ABBREVIATIONS
8	CD101	12650008	FP2-13-594	SEWER AND WATER DEMOLITION PLAN – BERTH 12
9	CD102	12650009	FP2-13-595	SEWER AND WATER DEMOLITION PLAN – BERTH 11 WEST
10	CD103	12650010	FP2-13-596	SEWER AND WATER DEMOLITION PLAN – BERTH 11 EAST
11	CS101	12650011	FP2-13-597	SEWER LAYOUT PLAN – BERTH 12
12	CS102	12650012	FP2-13-598	SEWER LAYOUT PLAN – BERTH 11 WEST
13	CS103	12650013	FP2-13-599	SEWER LAYOUT PLAN – BERTH 11 EAST
14	CS301	12650014	FP2-13-600	SEWER SECTIONS – SHEET 1 OF 2
15	CS302	12650015	FP2-13-601	SEWER SECTIONS – SHEET 2 OF 2
16	CS501	12650016	FP2-13-602	SEWER DETAILS – SHEET 1 OF 2
17	CS502	12650017	FP2-13-603	SEWER DETAILS – SHEET 2 OF 2
18	CW101	12650018	FP2-13-604	FRESH WATER LAYOUT PLAN – BERTH 12
19	CW102	12650019	FP2-13-605	FRESH WATER LAYOUT PLAN – BERTH 11 WEST
20	CW103	12650020	FP2-13-606	FRESH WATER LAYOUT PLAN – BERTH 11 EAST
21	CW301	12650021	FP2-13-607	WATER SECTIONS
22	CW501	12650022	FP2-13-608	DETAILS – SHEET 1 OF 2
23	CW502	12650023	FP2-13-609	DETAILS – SHEET 2 OF 2
STRUCTURAL				
24	S-001	12650024	FP2-13-610	GENERAL NOTES, LEGEND AND ABBREVIATIONS
25	S-101	12650025	FP2-13-611	UTILITY STRUCTURES REPAIR AND PIPE SUPPORTS PLAN
26	S-102	12650026	FP2-13-612	CATWALK PLAN
27	S-501	12650027	FP2-13-613	DETAILS – SHEET 1 OF 4
28	S-502	12650028	FP2-13-614	DETAILS – SHEET 2 OF 4
29	S-503	12650029	FP2-13-615	DETAILS – SHEET 3 OF 4
30	S-504	12650030	FP2-13-616	DETAILS – SHEET 4 OF 4
MECHANICAL				
31	M-001	12650031	FP2-13-617	GENERAL NOTES, LEGEND AND ABBREVIATIONS
32	MD101	12650032	FP2-13-618	DEMOLITION PLAN – BERTH 12
33	MD102	12650033	FP2-13-619	DEMOLITION PLAN – BERTH 11 WEST
34	MD103	12650034	FP2-13-620	DEMOLITION PLAN – BERTH 11 EAST
35	M-101	12650035	FP2-13-621	COMPRESSED AIR PLAN – BERTH 12
36	M-102	12650036	FP2-13-622	COMPRESSED AIR PLAN – BERTH 11 WEST
37	M-103	12650037	FP2-13-623	COMPRESSED AIR PLAN – BERTH 11 EAST
38	M-104	12650038	FP2-13-624	HIGH PRESSURE STEAM PLAN – BERTH 12
39	M-105	12650039	FP2-13-625	HIGH PRESSURE STEAM PLAN – BERTH 11 WEST
40	M-106	12650040	FP2-13-626	HIGH PRESSURE STEAM PLAN – BERTH 11 EAST
41	M-301	12650041	FP2-13-627	SECTIONS – SHEET 1 OF 2
42	M-302	12650042	FP2-13-628	SECTIONS – SHEET 2 OF 2
43	M-501	12650043	FP2-13-629	DETAILS
ELECTRICAL				
44	E-001	12650044	FP2-13-630	GENERAL NOTES, LEGEND AND ABBREVIATIONS
45	ED101	12650045	FP2-13-631	ELECTRICAL DEMOLITION PLAN – BERTH 12
46	ED102	12650046	FP2-13-632	ELECTRICAL DEMOLITION PLAN – BERTH 11 WEST
47	ED103	12650047	FP2-13-633	ELECTRICAL DEMOLITION PLAN – BERTH 11 EAST
48	E-101	12650048	FP2-13-634	ELECTRICAL LAYOUT PLAN – BERTH 12 – SEWER
49	E-102	12650049	FP2-13-635	ELECTRICAL LAYOUT PLAN – BERTH 11 WEST – SEWER
50	E-103	12650050	FP2-13-636	ELECTRICAL LAYOUT PLAN – BERTH 11 EAST – SEWER
51	E-104	12650051	FP2-13-637	ELECTRICAL LAYOUT PLAN – BERTH 12 – WATER
52	E-105	12650052	FP2-13-638	ELECTRICAL LAYOUT PLAN – BERTH 11 WEST – WATER
53	E-106	12653334	FP2-13-639	ELECTRICAL LAYOUT PLAN – BERTH 11 EAST – WATER
54	E-401	12653335	FP2-13-640	ELECTRICAL PART PLAN – BUILDING 311
55	E-501	12653336	FP2-13-641	DETAILS
56	E-601	12653337	FP2-13-642	PANEL SCHEDULES
57	E-602	12653338	FP2-13-643	ONE LINE DIAGRAMS

SYM	DESCRIPTION	DATE	APPR

NAVFAC

COMMONWEALTH OF MASSACHUSETTS
VICTOR M. GOVONI
CIVIL
No. 41733
REGISTERED PROFESSIONAL ENGINEER
SEAL

ENGINEERS
FST
Since 1914
FAY, SPOFFORD & THORNDIKE
5 BURLINGTON WOODS
BURLINGTON, MA 01803
A/E INFO

APPROVED
FOR COMMANDER NAVFAC
ACTIVITY
SATISFACTORY TO DATE

DES HBF | DRW HBF | CHK DMD
PWD-ME DM/POC MIKE McCANN
BRANCH MANAGER
CHIEF ENG/ARCH
FIRE PROTECTION

DEPARTMENT OF THE NAVY
NAVAL FACILITIES ENGINEERING COMMAND
PUBLIC WORKS DEPARTMENT – MAINE
NAVAL FACILITIES ENGINEERING COMMAND ~ MID-ATLANTIC
NAVAL SHIPYARD – PORTSMOUTH, NH
PORTSMOUTH NAVAL SHIPYARD
KITTERY, MAINE
REPLACE UTLITIES
BERTHS 11 AND 12
INDEX SHEET

MAXIMO No.: 5918670
EPROJECT NO.: 1171704
CONSTR. CONTR. NO.
NAVFAC DRAWING NO.
12650002
SHEET 2 OF 57
G-002 | FP2-13-588

DRAWFORM REVISION: 10 MARCH 2009

FILE NAME: U:\BQ-216K\CADD\General\BQ-216K-G-002.dwg LAYOUT NAME: BQ-216K-G-002 PLOTTED: Tuesday, June 25, 2013 - 10:33am USER: Fiber_JH

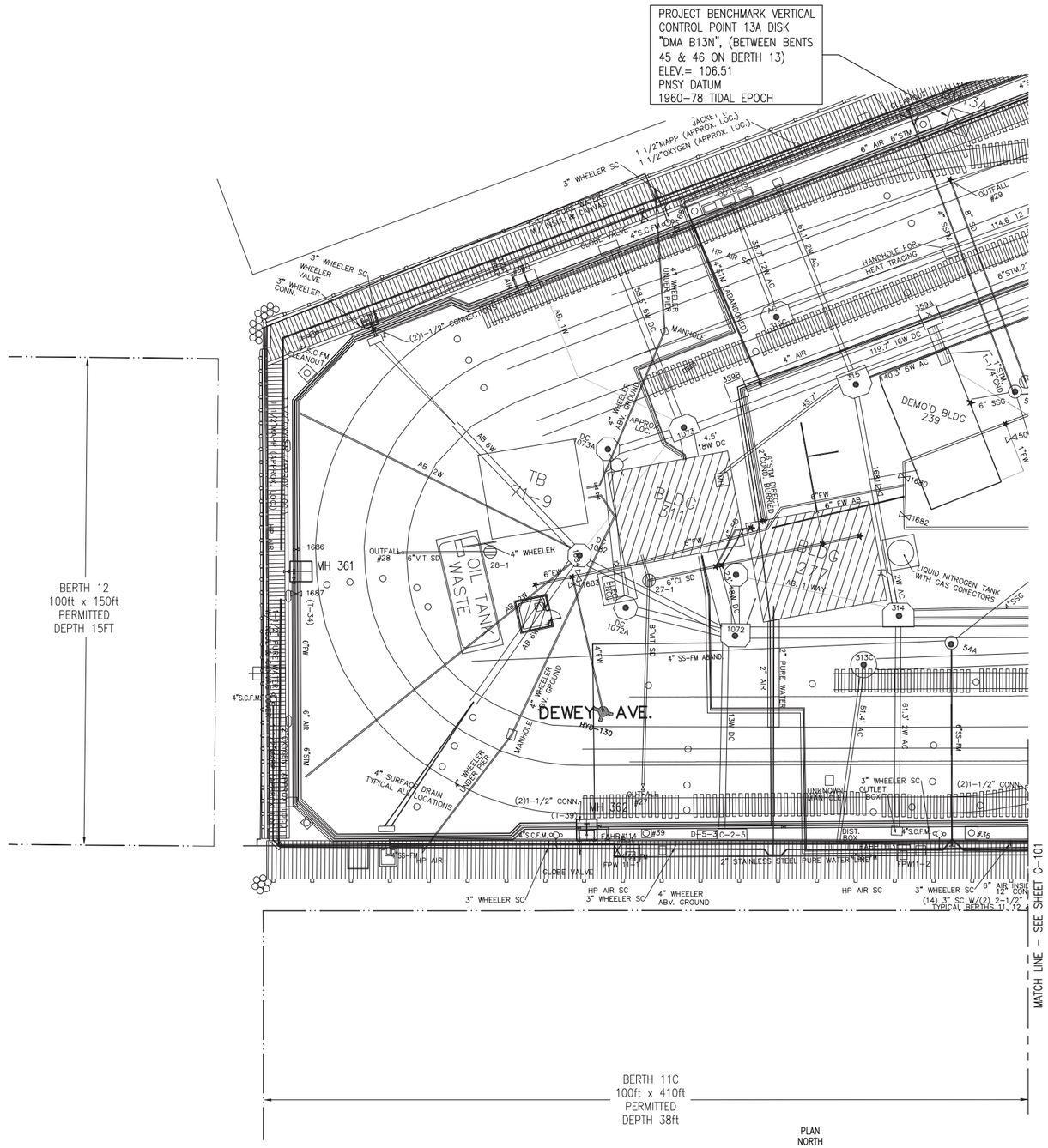

EXISTING CONDITIONS - BERTH 12

SCALE: 1" = 20'

PLAN NORTH

KEY PLAN

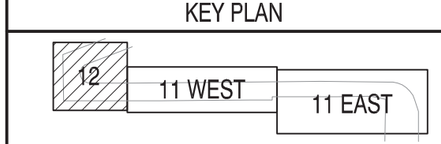

GRAPHIC SCALE

0 10' 20' 40'

SCALE:1"=20'

APPR	DATE	DESCRIPTION	STM

NAVFAC

COMMONWEALTH OF MASSACHUSETTS
VICTOR M. GOVONI
CIVIL
No. 41739
REGISTERED PROFESSIONAL ENGINEER
SEAL

ENGINEERS
FST
Since 1914
FAY, SPOFFORD & THORNDIKE
5 BURLINGTON WOODS
BURLINGTON, MA 01803
A/E INFO

APPROVED
FOR COMMANDER NAVFAC
ACTIVITY
SATISFACTORY TO DATE
DES VMG DRW HBF CHK VMG
PWD-ME DM/POC MIKE McCANN
BRANCH MANAGER
CHIEF ENG/ARCH
FIRE PROTECTION

DEPARTMENT OF THE NAVY
NAVAL FACILITIES ENGINEERING COMMAND
PUBLIC WORKS DEPARTMENT - MAINE
NAVAL FACILITIES ENGINEERING COMMAND ~ MID-ATLANTIC
NAVAL SHIPYARD - PORTSMOUTH, NH
PORTSMOUTH NAVAL SHIPYARD
KITTERY, MAINE

REPLACE UTLITIES BERTHS 11 AND 12

EXISTING CONDITIONS - BERTH 12

MAXIMO No.: 5918670
EPROJECT NO.: 1171704
CONSTR. CONTR. NO.
NAVFAC DRAWING NO. 12650003
SHEET 3 OF 57
G-101 FP2-13-589
DRAWFORM REVISION: 10 MARCH 2009

FILE NAME: U:\BG-216K\CADD\General\BG-216K-G-101-03.dwg LAYOUT NAME: G-101 PLOTTED: Tuesday, June 25, 2013 - 10:33am USER: Fribert_H

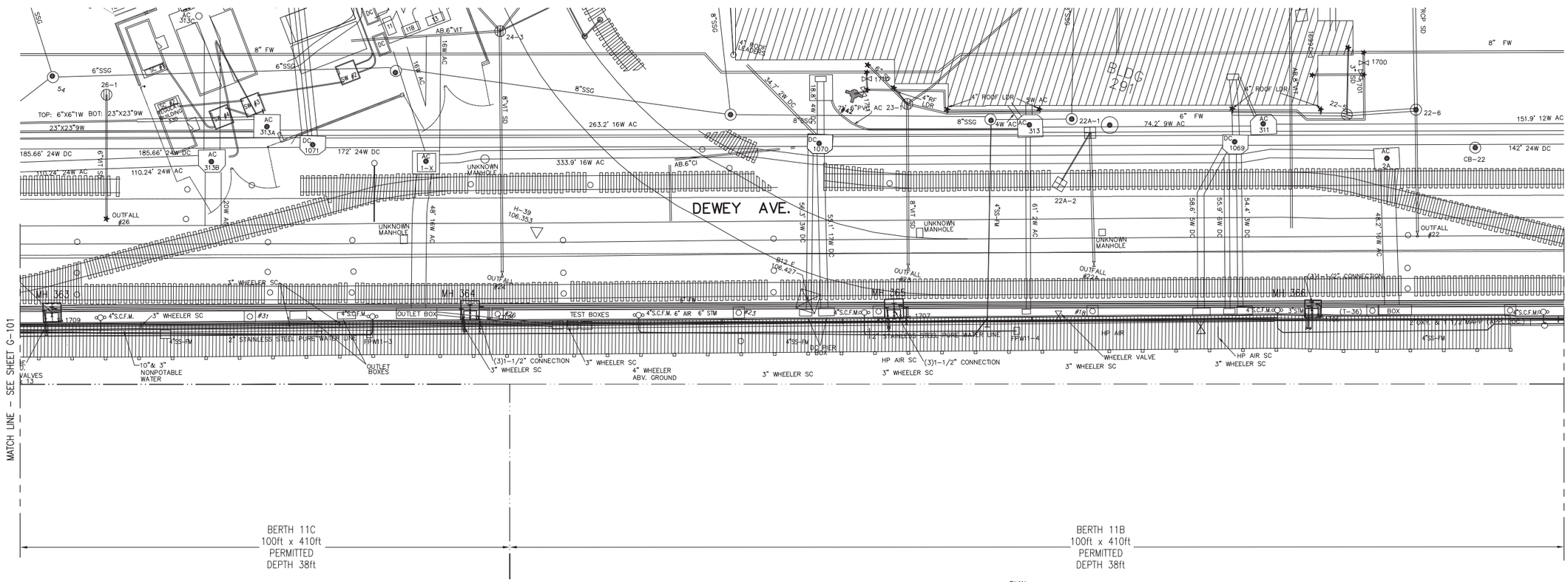

EXISTING CONDITIONS - BERTH 11 WEST

SCALE: 1" = 20'

KEY PLAN

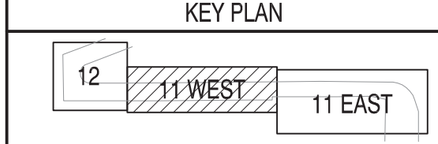

GRAPHIC SCALE

0 10' 20' 40'

SCALE:1"=20'

NAVFAC

COMMONWEALTH OF MASSACHUSETTS
VICTOR M. GOVONI
CIVIL
No. 41734
REGISTERED PROFESSIONAL ENGINEER

SEAL

ENGINEERS
FST
Since 1914
FAY, SPOFFORD & THORNDIKE
5 BURLINGTON WOODS
BURLINGTON, MA 01803
A/E INFO

APPROVED

FOR COMMANDER NAVFAC

ACTIVITY

SATISFACTORY TO DATE

DES VMG | DRW HBF | CHK VMG

PWD-ME DM/POC MIKE McCANN

BRANCH MANAGER

CHIEF ENG/ARCH

FIRE PROTECTION

DEPARTMENT OF THE NAVY
NAVAL FACILITIES ENGINEERING COMMAND
NAVAL FACILITIES ENGINEERING COMMAND ~ MID-ATLANTIC
PUBLIC WORKS DEPARTMENT - MAINE
NAVAL SHIPYARD - PORTSMOUTH, NH

PORTSMOUTH NAVAL SHIPYARD
KITTERY, MAINE

REPLACE UTLITIES BERTHS 11 AND 12

EXISTING CONDITIONS - BERTH 11 WEST

MAXIMO No.: 5918670

EPROJECT NO.: 1171704

CONSTR. CONTR. NO.

NAVFAC DRAWING NO. 12650004

SHEET 4 OF 57

G-102 | FP2-13-590

DRAWFORM REVISION: 10 MARCH 2009

FILE NAME: U:\BQ-216K\CADD\General\BQ-216K-G-101-03.dwg LAYOUT NAME: G-102 PLOTTED: Tuesday, June 25, 2013 - 10:33am USER: Friber_H

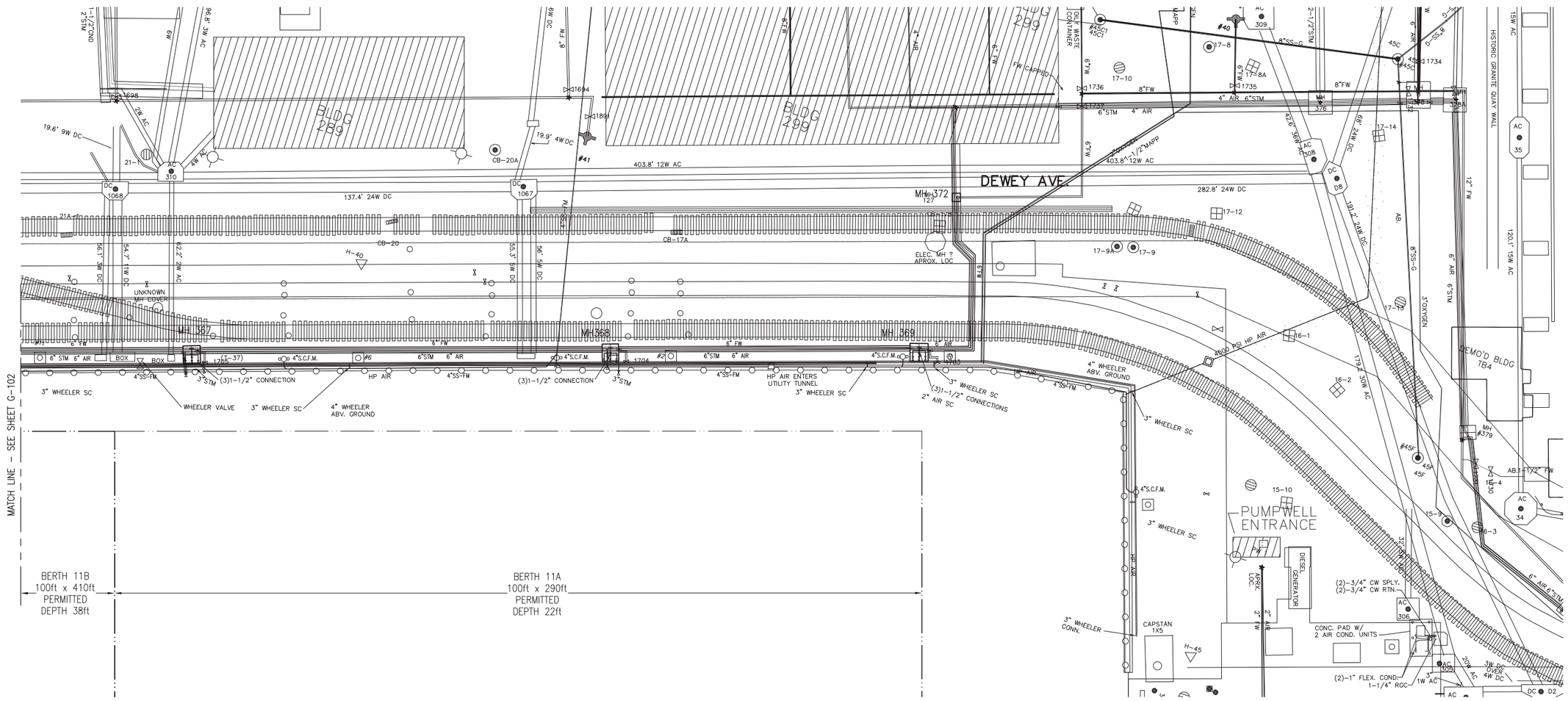

EXISTING CONDITIONS - BERTH 11 EAST

SCALE: 1" = 20'

PLAN NORTH

KEY PLAN

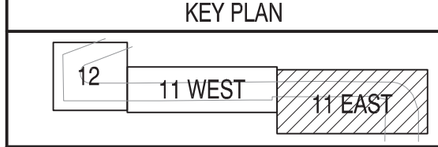

GRAPHIC SCALE

0 10' 20' 40'

SCALE:1"=20'

APPR	DATE	DESCRIPTION	SYM

NAVFAC

COMMONWEALTH OF MASSACHUSETTS
VICTOR M. GOVONI
CIVIL
No. 41733
REGISTERED PROFESSIONAL ENGINEER
SEAL

ENGINEERS
FST
Since 1914
FAY, SPOFFORD & THORNDIKE
5 BURLINGTON WOODS
BURLINGTON, MA 01803
A/E INFO

APPROVED
FOR COMMANDER NAVFAC
ACTIVITY
SATISFACTORY TO DATE
DES VMG DRW HBF CHK VMG
PWD-ME DM/POC MIKE McCANN
BRANCH MANAGER
CHIEF ENG/ARCH
FIRE PROTECTION

DEPARTMENT OF THE NAVY
NAVAL FACILITIES ENGINEERING COMMAND
PUBLIC WORKS DEPARTMENT - MAINE
PORTSMOUTH NAVAL SHIPYARD

NAVAL FACILITIES ENGINEERING COMMAND – MID-ATLANTIC
NAVAL SHIPYARD – PORTSMOUTH, NH
KITTERY, MAINE

REPLACE UTLITIES BERTHS 11 AND 12

EXISTING CONDITIONS – BERTH 11 EAST

MAXIMO No.: 5918670
EPROJECT NO.: 1171704
CONSTR. CONTR. NO.
NAVFAC DRAWING NO. 12650005
SHEET 5 OF 57
G-103 FP2-13-591

DRAWFORM REVISION: 10 MARCH 2009

FILE NAME: U:\BQ-216K\CADD\General\BQ-216K-G-101-03.dwg LAYOUT NAME: G-103 PLOTTED: Tuesday, June 25, 2013 - 10:33am USER: Fiber_H

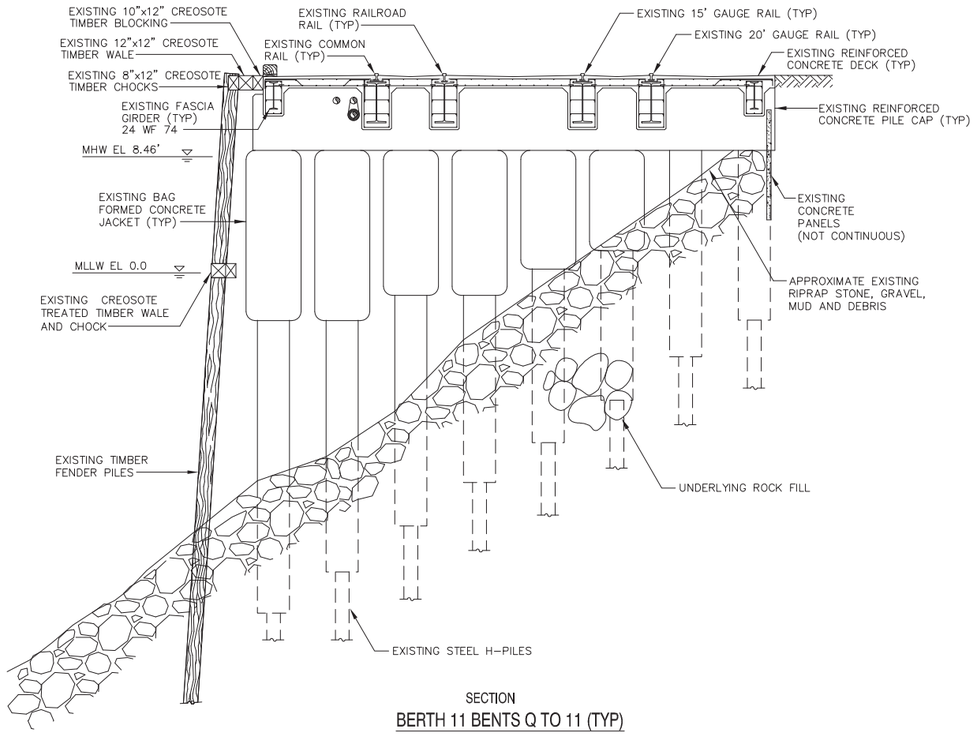

SECTION
BERTH 11 BENTS Q TO 11 (TYP)

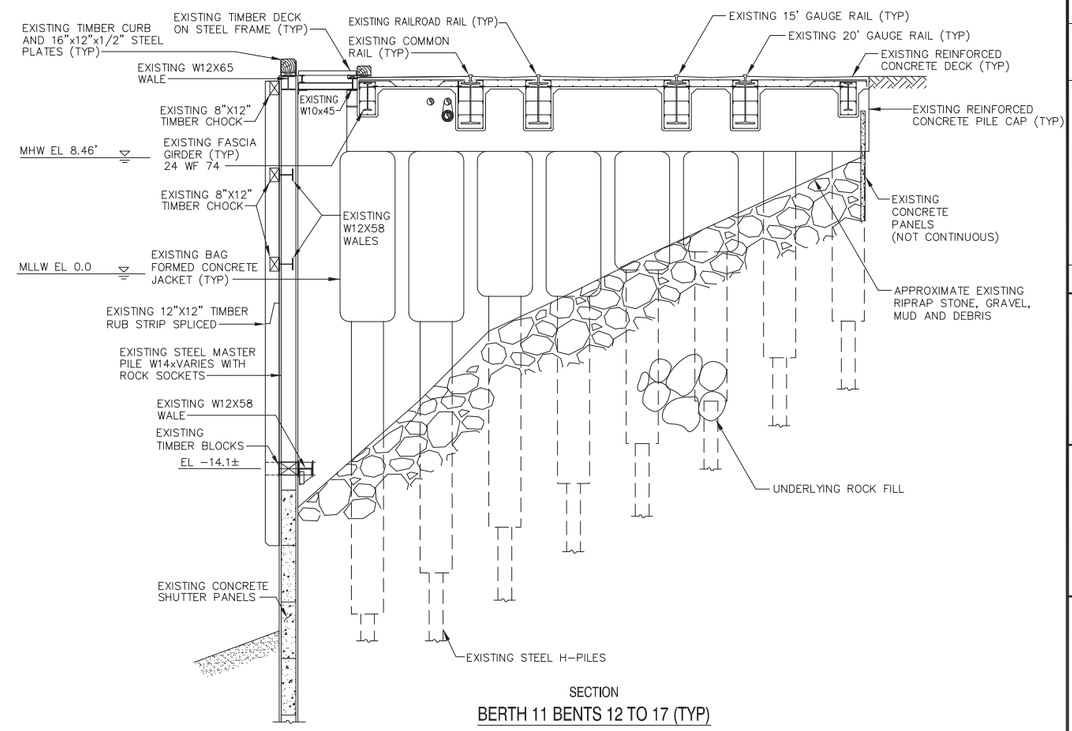

SECTION
BERTH 11 BENTS 12 TO 17 (TYP)

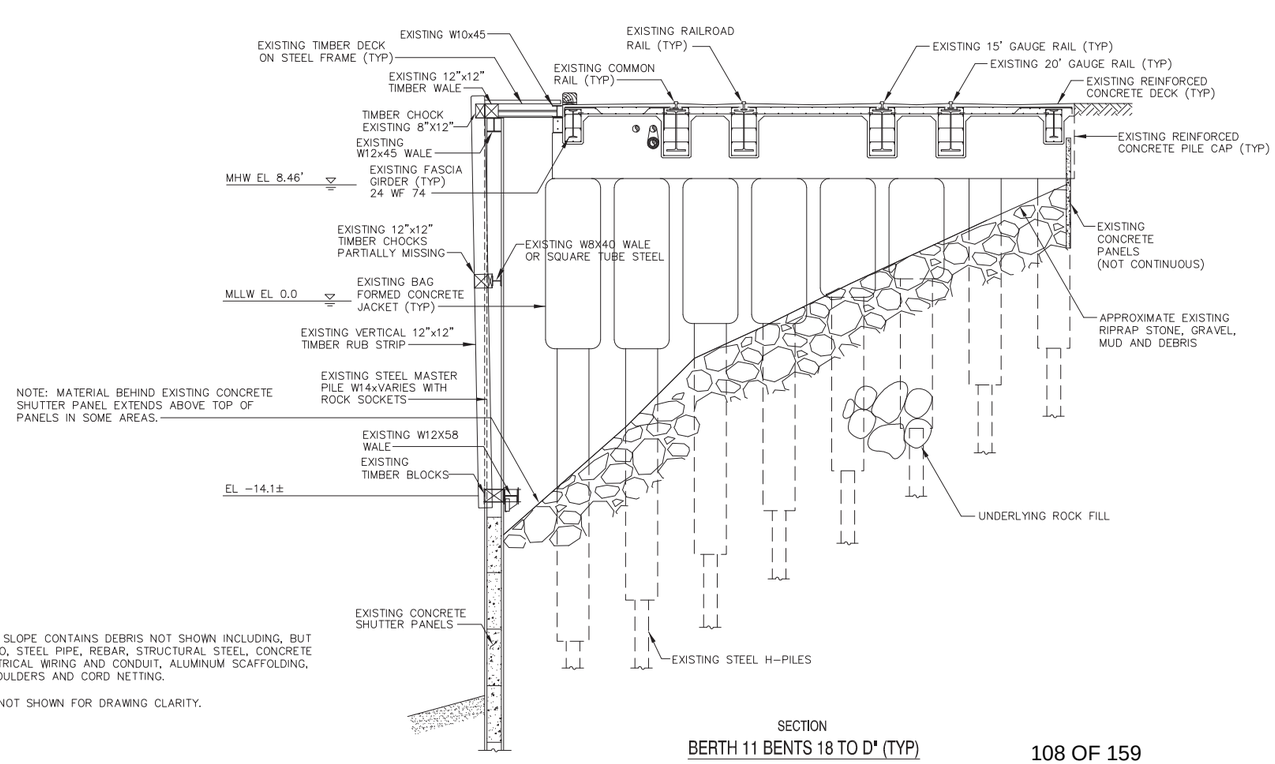

SECTION
BERTH 11 BENTS 18 TO D' (TYP)

NOTES:

1. UNDER WHARF SLOPE CONTAINS DEBRIS NOT SHOWN INCLUDING, BUT NOT LIMITED TO, STEEL PIPE, REBAR, STRUCTURAL STEEL, CONCRETE RUBBLE, ELECTRICAL WIRING AND CONDUIT, ALUMINUM SCAFFOLDING, WIRE ROPE, BOULDERS AND CORD NETTING.
2. ALL UTILITIES NOT SHOWN FOR DRAWING CLARITY.

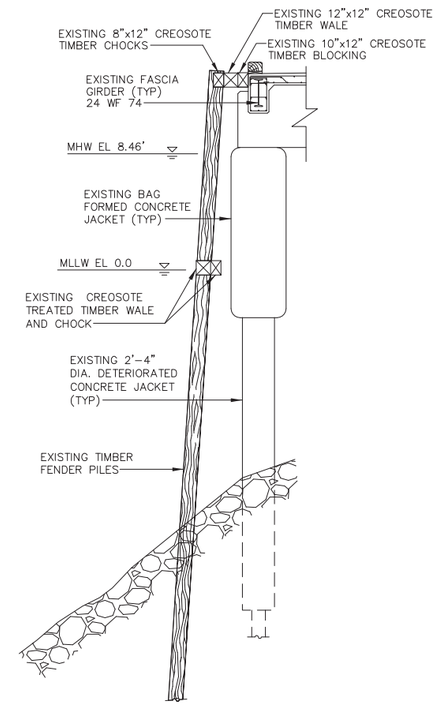

SECTION
BERTH 11 BENTS LYK TO P (TYP)

SYM	DESCRIPTION	DATE	APPR

NAVFAC

COMMONWEALTH OF MASSACHUSETTS — VICTOR M. GOVONI — CIVIL — No. 41733 — REGISTERED PROFESSIONAL ENGINEER — SEAL

ENGINEERS
FST
Since 1914
FAY, SPOFFORD & THORNDIKE
5 BURLINGTON WOODS
BURLINGTON, MA 01803
A/E INFO

APPROVED
FOR COMMANDER NAVFAC
ACTIVITY
SATISFACTORY TO DATE
DES VMG DRW HBF CHK VMG
PWD-ME DM/POC MIKE McCANN
BRANCH MANAGER
CHIEF ENG/ARCH
FIRE PROTECTION

DEPARTMENT OF THE NAVY
NAVAL FACILITIES ENGINEERING COMMAND
PUBLIC WORKS DEPARTMENT – MAINE
PORTSMOUTH NAVAL SHIPYARD

NAVAL FACILITIES ENGINEERING COMMAND ~ MID-ATLANTIC
NAVAL SHIPYARD – PORTSMOUTH, NH
KITTERY, MAINE

REPLACE UTLITIES
BERTHS 11 AND 12

EXISTING TYPICAL WHARF SECTIONS BERTH 11

MAXIMO No.: 5918670
EPROJECT NO.: 1171704
CONSTR. CONTR. NO.
NAVFAC DRAWING NO. 12650006
SHEET 6 OF 57
G-301 FP2-13-592

DRAWFORM REVISION: 10 MARCH 2009

FILE NAME: U:\BQ-2166\CADD\General\BQ-2166-G-301.dwg LAYOUT NAME: G-301 PLOTTED: Tuesday, June 25, 2013 - 10:33am USER: Fribar_H

GENERAL SEWER NOTES:

1. REMOVE AND REPLACE 2" INSULATION, STAINLESS STEEL JACKETING, BUTYL MEMBRANE WRAP AND HEAT TRACE CABLE ENCLOSED IN COPPER/NICKEL TUBING FROM EXIST 4" DUCTILE IRON FORCE MAIN.
2. REMOVE AND REPLACE SHIP TO SHORE WYE CONNECTIONS CONSISTING OF 4" FLANGED DUCTILE IRON PIPE, FITTINGS, PLUG VALVES, CHECK VALVES ALL COUPLINGS AND KAMLOCK FITTINGS.
3. EXISTING HANGER TYPES TO BE REMOVED ARE SIMILAR TO THOSE DETAILED ON S-501. HANGER REMOVAL SHALL INCLUDE REMOVAL OF FASTENERS UNLESS OTHERWISE INDICATED OR REQUIRED FOR THE WORK. FILL FASTENER HOLES WITH NON-SHRINK GROUT.
4. EXERCISE CAUTION WHEN PERFORMING WORK ON/IN MANHOLES AS THEY ARE ADJACENT TO ACTIVE CRANE RAILS. DO NOT PLACE ITEMS WITHIN 42" FROM CENTERLINE OF CRANE RAILS.
5. EXERCISE EXTREME CAUTION; 4500 PSI HIGH PRESSURE AIR IN THE AREA.
6. THE CONTRACTOR SHALL PROTECT FROM DAMAGE ALL EXISTING EXPOSED DUCTILE IRON PIPE TO REMAIN.
7. THE CONTRACTOR SHALL CAP THE ENDS OF PIPELINES AND INSULATION WATERTIGHT AT THE END OF EACH WORK DAY AND WHEN TIDE LEVELS RISE TO WITHIN 12 INCHES OF THE FORCE MAIN SEWER.
8. THE CONTRACTOR SHALL VERIFY THE SLOPES OF THE EXISTING 4" DUCTILE IRON PIPES TO ENSURE THAT THEY MEET, AT A MINIMUM, THE EXISTING SLOPES SHOWN ON THIS DRAWING AND THAT NO SAGS EXIST. WHERE SAGS ARE FOUND THE CONTRACTOR SHALL PROVIDE A TYPE 1 OR 2A HANGER AS SHOWN ON THE S-501. ASSUME 5 HANGERS WILL BE REQUIRED FOR BIDDING PURPOSES.
9. GOVERNMENT VESSELS MAY BE DOCKED AT VARIOUS LOCATIONS ALONG BERTHS 11 AND 12. SEE SPECIFICATION SECTION 01 14 00.00 22 FOR WORK RESTRICTIONS.
10. FOR PIPE SUPPORT LAYOUT, SEE S-501.
11. THE CONTRACTOR SHALL PROVIDE PREMOLDED INSULATION, MAINTAINING A 2" THICK INSULATION AT FLANGED JOINTS, MECHANICAL COUPLINGS AND FLANGED ADAPTOR COUPLINGS. FOR BIDDING PURPOSES ASSUME 21 LOCATIONS WILL REQUIRE PREMOLDED INSULATION.
12. THE CONTRACTOR SHALL VERIFY TYPICAL JOINT SPACING ON EXISTING SEWER FORCE MAIN PIPING SYSTEM.
13. PROVIDE NEW 10"x10" CONCRETE SUPPORTS FOR SEWER SHIP TO SHORE CONNECTIONS AS INDICATED.

GENERAL WATER NOTES:

1. THE WORK BOUNDARIES SHOWN ARE MINIMUM REQUIREMENTS. THE CONTRACTOR MAY AT HIS OPTION EXTEND THE WORK BOUNDARIES SHOWN AT NO ADDITIONAL COST TO THE GOVERNMENT.
2. RAIL AND CRANE TRACKS SHALL REMAIN IN SERVICE DURING CONSTRUCTION.
3. ALL PIPE SUPPORTS SHALL BE LOCATED NOT MORE THAN 14'-0" FROM NEAREST BENT AND AS CLOSE TO MIDPOINT BETWEEN BENTS AS POSSIBLE.
4. ELEVATION OF PIPING TO MATCH ELEVATION OF EXISTING PIPE SLEEVES IN DOCK. PIPING SHALL UTILIZE EXISTING PIPE SLEEVES.
5. ALL EXISTING INSULATION ALONG BERTHS 11 AND 12 TO BE REMOVED EXCEPT AS NOTED.
6. EXERCISE CAUTION WHEN PERFORMING WORK ON/IN MANHOLES AS THEY ARE ADJACENT TO ACTIVE CRANE RAILS. DO NOT PLACE ITEMS WITHIN 42" FROM CENTERLINE OF CRANE RAILS.
7. EXERCISE EXTREME CAUTION; 4500 PSI HIGH PRESSURE AIR IN THE AREA.
8. THE CONTRACTOR SHALL BE RESPONSIBLE FOR PROTECTION OF THE EXPOSED DUCTILE IRON PIPE UPON COMPLETION OF REMOVAL AND DISPOSAL OF INSULATION, JACKET AND HEAT TRACE SYSTEM.

ABBREVIATIONS

A	AIR
ABAND	ABANDONED
APPROX	APPROXIMATELY
BF	BUTTERFLY
CA	COMPRESSED AIR
CB	CATCH BASIN
CH	CHANNEL
COMP	COMPRESSED
CONN	CONNECTION
CND	CONDENSATE
CONC	CONCRETE
CONT	CONTINUATION
CTE	CONNECT TO EXISTING
DET	DETAIL
DI	DUCTILE IRON
DWG	DRAWING
EHH	ELECTRICAL HANDHOLE
EL, ELEV	ELEVATION
EMH	ELECTRICAL MANHOLE
EXIST	EXISTING
FLG	FLANGE
FM	FORCEMAIN
FW	FRESH WATER
GALV	GALVANIZED
GV	GATE VALVE
H	HIGH
HW	HOT WATER
HWMH	HOT WATER MANHOLE
ID	INSIDE DIAMETER
IN	INCH
INSUL	INSULATION
LB	POUND
LF	LINEAR FEET
MH	MANHOLE
NTS	NOT TO SCALE
PE	PLAIN END
PLCS	PLACES
PSI	POUNDS PER SQUARE INCH
OD	OUTSIDE DIAMETER
RED	REDUCED
RPBFP	REDUCED PRESSURE BACKFLOW PREVENTER
SS	SANITARY SEWER
SST	STAINLESS STEEL
STHH	STEAM HANDHOLE
STL	STEEL
STM	STEAM
STMH	STEAM MANHOLE
TEMP	TEMPORARY
TYP.	TYPICAL
VIF	VERIFY IN FIELD
VLV	VALVE
W, WTR	WATER

LEGEND

	STRAINER
	BUTTERFLY VALVE
	GATE VALVE
	CHECK VALVE
	UNION
	FLANGED VALVE
	ANCHOR
	GLOBE NC
	GLOBE NO
T	TRAP
	BACKFLOW PREVENTER
	BELLOWS EXPANSION GROUP
	GUIDE
	HOSE CONNECTION
	REDUCER
AS	ANCHOR SUPPORT
GS	GUIDE SUPPORT
PS	PIPE SUPPORT
	EXISTING TO REMOVE
ST	EXISTING TO REMAIN
ST	EXISTING TO REMOVE
ST STMH	STEAM MANHOLE
STHH	STEAM HANDHOLE
ST STV	STEAM VALVE
STM	STEAM
A	COMPRESSED AIR
HWS/HWR	HOT WATER SUPPLY/RETURN
CND	CONDENSATE
E	ELECTRICAL
W	WATER
S	SEWER
D	DRAIN

SYM	DESCRIPTION	DATE	APPR

NAVFAC

STATE OF NEW HAMPSHIRE — BRIAN E. SHEA No. 10359 LICENSED PROFESSIONAL ENGINEER — 6/21/13 — SEAL

ENGINEERS FST Since 1914
FAY, SPOFFORD & THORNDIKE
5 BURLINGTON WOODS
BURLINGTON, MA 01803
A/E INFO

APPROVED
FOR COMMANDER NAVFAC
ACTIVITY
SATISFACTORY TO DATE

DES	DRW	CHK
VMG	HBF	VMG

PWD-ME DM/POC MIKE McCANN
BRANCH MANAGER
CHIEF ENG/ARCH
FIRE PROTECTION

DEPARTMENT OF THE NAVY
NAVAL FACILITIES ENGINEERING COMMAND
PUBLIC WORKS DEPARTMENT – MAINE
PORTSMOUTH NAVAL SHIPYARD

NAVAL FACILITIES ENGINEERING COMMAND – MID-ATLANTIC
NAVAL SHIPYARD – PORTSMOUTH, NH
KITTERY, MAINE

REPLACE UTLITIES
BERTHS 11 AND 12

GENERAL NOTES, LEGEND AND ABBREVIATIONS

MAXIMO No.: 5918670
EPROJECT NO.: 1171704
CONSTR. CONTR. NO.
NAVFAC DRAWING NO. 12650007
SHEET 7 OF 57
C-001 | FP2-13-593

DRAWFORM REVISION: 10 MARCH 2009

FILE NAME: U:\BG-216K\CADD\Civil\BG-216K-C-001.dwg LAYOUT NAME: C-001 PLOTTED: Tuesday, June 25, 2013 - 10:34am USER: FrBer_H

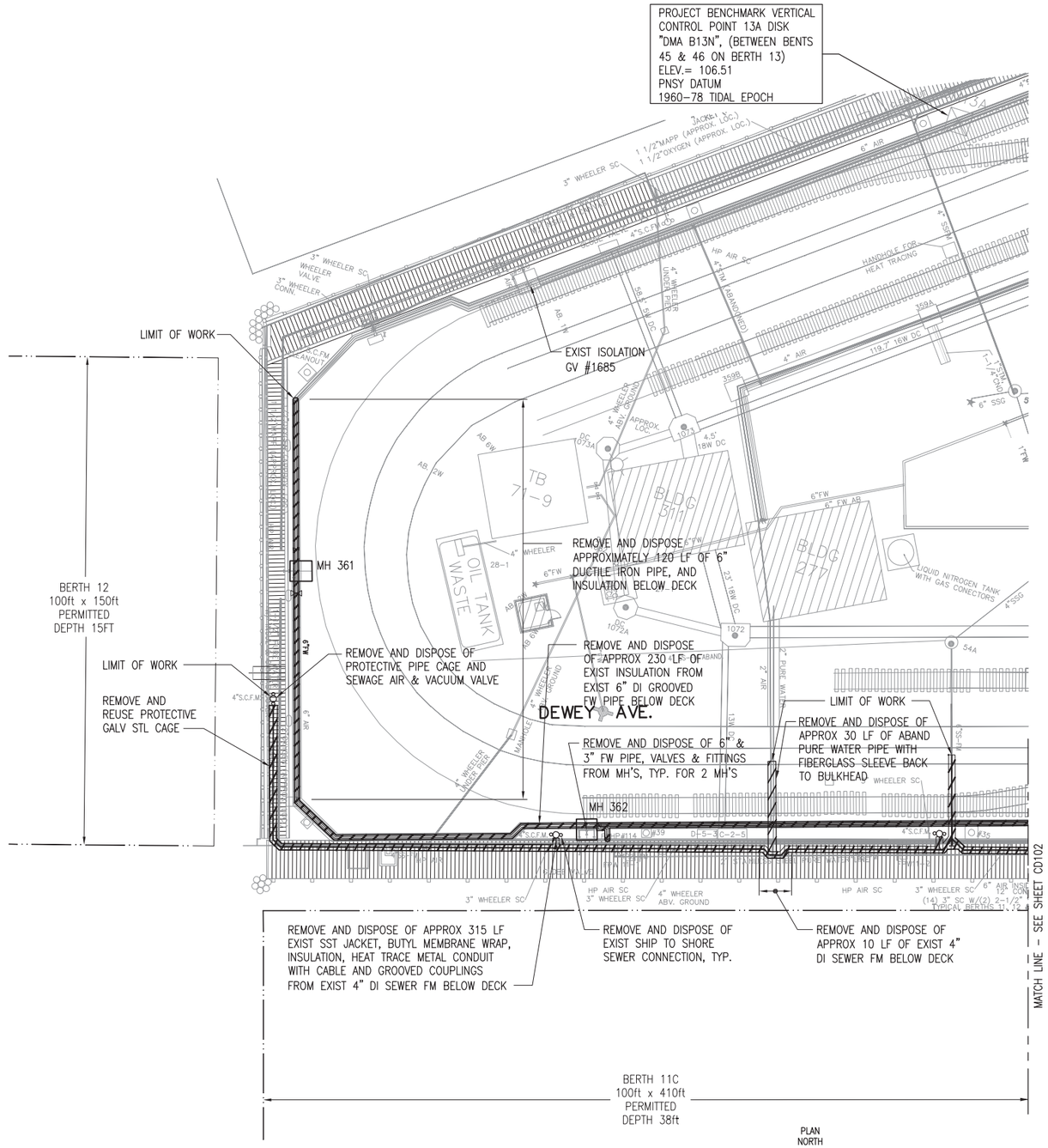

SEWER AND WATER DEMOLITION PLAN - BERTH 12

SCALE: 1" = 20'

KEY PLAN

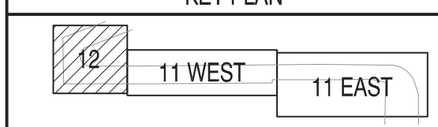

GRAPHIC SCALE

0 10' 20' 40'

SCALE:1"=20'

APPR	DATE	DESCRIPTION	SYM

NAVFAC

STATE OF NEW HAMPSHIRE — BRIAN E. SHEA No. 10359 — LICENSED PROFESSIONAL ENGINEER — 6/21/13 — SEAL

ENGINEERS FST Since 1914
FAY, SPOFFORD & THORNDIKE
5 BURLINGTON WOODS BURLINGTON, MA 01803
A/E INFO

APPROVED
FOR COMMANDER NAVFAC
ACTIVITY
SATISFACTORY TO DATE
DES RHD DRW KTB CHK BES
PWD-ME DM/POC MIKE McCANN
BRANCH MANAGER
CHIEF ENG/ARCH
FIRE PROTECTION

DEPARTMENT OF THE NAVY
NAVAL FACILITIES ENGINEERING COMMAND
PUBLIC WORKS DEPARTMENT – MAINE
NAVAL FACILITIES ENGINEERING COMMAND ~ MID-ATLANTIC
NAVAL SHIPYARD – PORTSMOUTH, NH
PORTSMOUTH NAVAL SHIPYARD
KITTERY, MAINE

REPLACE UTLITIES BERTHS 11 AND 12

SEWER AND WATER DEMOLITION PLAN – BERTH 12

MAXIMO No.: 5918670
EPROJECT NO.: 1171704
CONSTR. CONTR. NO.
NAVFAC DRAWING NO. 12650008
SHEET 8 OF 57
CD101 FP2-13-594

DRAWFORM REVISION: 10 MARCH 2009

FILE NAME: U:\BO-216K\CADD\Civil\BO-216K-CD101-03.dwg LAYOUT NAME: CD101 PLOTTED: Tuesday, June 25, 2013 - 10:34am USER: Fiber_JH

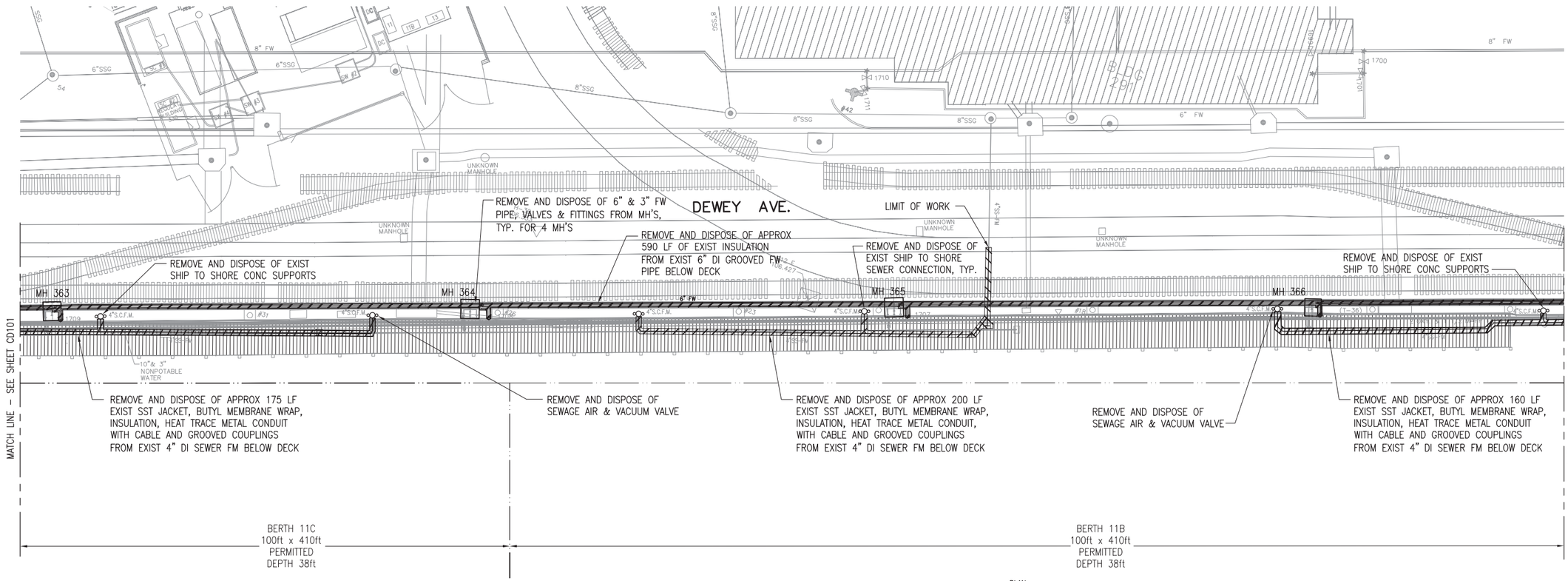

SEWER AND WATER DEMOLITION PLAN - BERTH 11 WEST

SCALE: 1" = 20'

PLAN NORTH

KEY PLAN

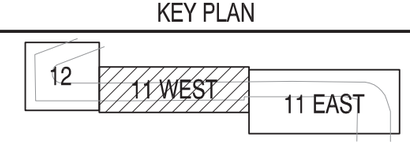

GRAPHIC SCALE

0 10' 20' 40'

SCALE:1"=20'

APPR	DATE	DESCRIPTION	STM

NAVFAC

STATE OF NEW HAMPSHIRE — BRIAN E. SHEA No. 10359 LICENSED PROFESSIONAL ENGINEER — 6/21/13 — SEAL

ENGINEERS FST Since 1914
FAY, SPOFFORD & THORNDIKE
5 BURLINGTON WOODS
BURLINGTON, MA 01803
A/E INFO

APPROVED
FOR COMMANDER NAVFAC
ACTIVITY
SATISFACTORY TO DATE
DES RHD DRW KTB CHK BES
PWD-ME DM/POC MIKE McCANN
BRANCH MANAGER
CHIEF ENG/ARCH
FIRE PROTECTION

DEPARTMENT OF THE NAVY
NAVAL FACILITIES ENGINEERING COMMAND
PUBLIC WORKS DEPARTMENT - MAINE
NAVAL FACILITIES ENGINEERING COMMAND ~ MID-ATLANTIC
NAVAL SHIPYARD - PORTSMOUTH, NH
PORTSMOUTH NAVAL SHIPYARD
KITTERY, MAINE

REPLACE UTILITIES
BERTHS 11 AND 12

SEWER AND WATER DEMOLITION PLAN - BERTH 11 WEST

MAXIMO No.: 5918670
EPROJECT NO.: 1171704
CONSTR. CONTR. NO.
NAVFAC DRAWING NO. 12650009
SHEET 9 OF 57
CD102 FP2-13-595

DRAWFORM REVISION: 10 MARCH 2009

FILE NAME: U:\BQ-2166\CADD\Civil\BQ-2166-CD101-03.dwg LAYOUT NAME: CD102 PLOTTED: Tuesday, June 25, 2013 - 10:34am USER: Friber_H

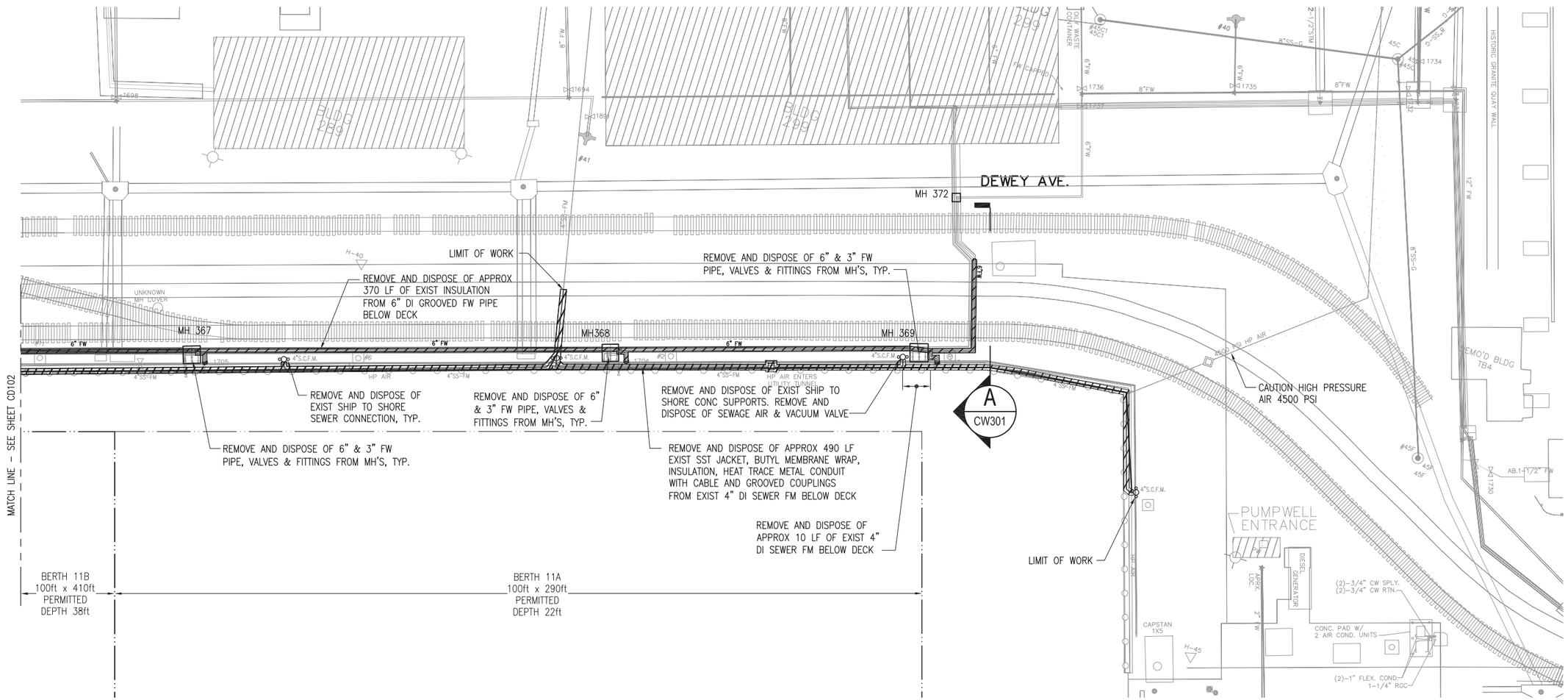

SEWER AND WATER DEMOLITION PLAN - BERTH 11 EAST

SCALE: 1" = 20'

KEY PLAN

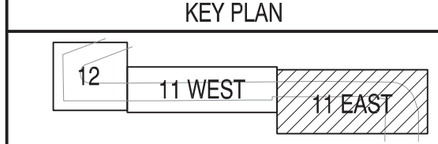

GRAPHIC SCALE

0 10' 20' 40'

SCALE:1"=20'

SYM	DESCRIPTION	DATE	APPR

NAVFAC

STATE OF NEW HAMPSHIRE — BRIAN E. SHEA No. 10359 LICENSED PROFESSIONAL ENGINEER — 6/21/13 — SEAL

ENGINEERS FST Since 1914

FAY, SPOFFORD & THORNDIKE
5 BURLINGTON WOODS
BURLINGTON, MA 01803
A/E INFO

APPROVED

FOR COMMANDER NAVFAC

ACTIVITY

SATISFACTORY TO DATE

DES RHD | DRW KTB | CHK BES

PWD-ME DM/POC MIKE McCANN

BRANCH MANAGER

CHIEF ENG/ARCH

FIRE PROTECTION

DEPARTMENT OF THE NAVY
NAVAL FACILITIES ENGINEERING COMMAND
PUBLIC WORKS DEPARTMENT - MAINE

NAVAL FACILITIES ENGINEERING COMMAND ~ MID-ATLANTIC
NAVAL SHIPYARD - PORTSMOUTH, NH

PORTSMOUTH NAVAL SHIPYARD — KITTERY, MAINE

REPLACE UTILITIES BERTHS 11 AND 12

SEWER AND WATER DEMOLITION PLAN - BERTH 11 EAST

MAXIMO No.: 5918670

EPROJECT NO.: 1171704

CONSTR. CONTR. NO.

NAVFAC DRAWING NO. 12650010

SHEET 10 OF 57

CD103 | FP2-13-596

DRAWFORM REVISION: 10 MARCH 2009

FILE NAME: U:\BQ-2166\CADD\Civil\BQ-2166-CD101-03.dwg LAYOUT NAME: CD103 PLOTTED: Tuesday, June 25, 2013 - 10:34am USER: Fiber_H

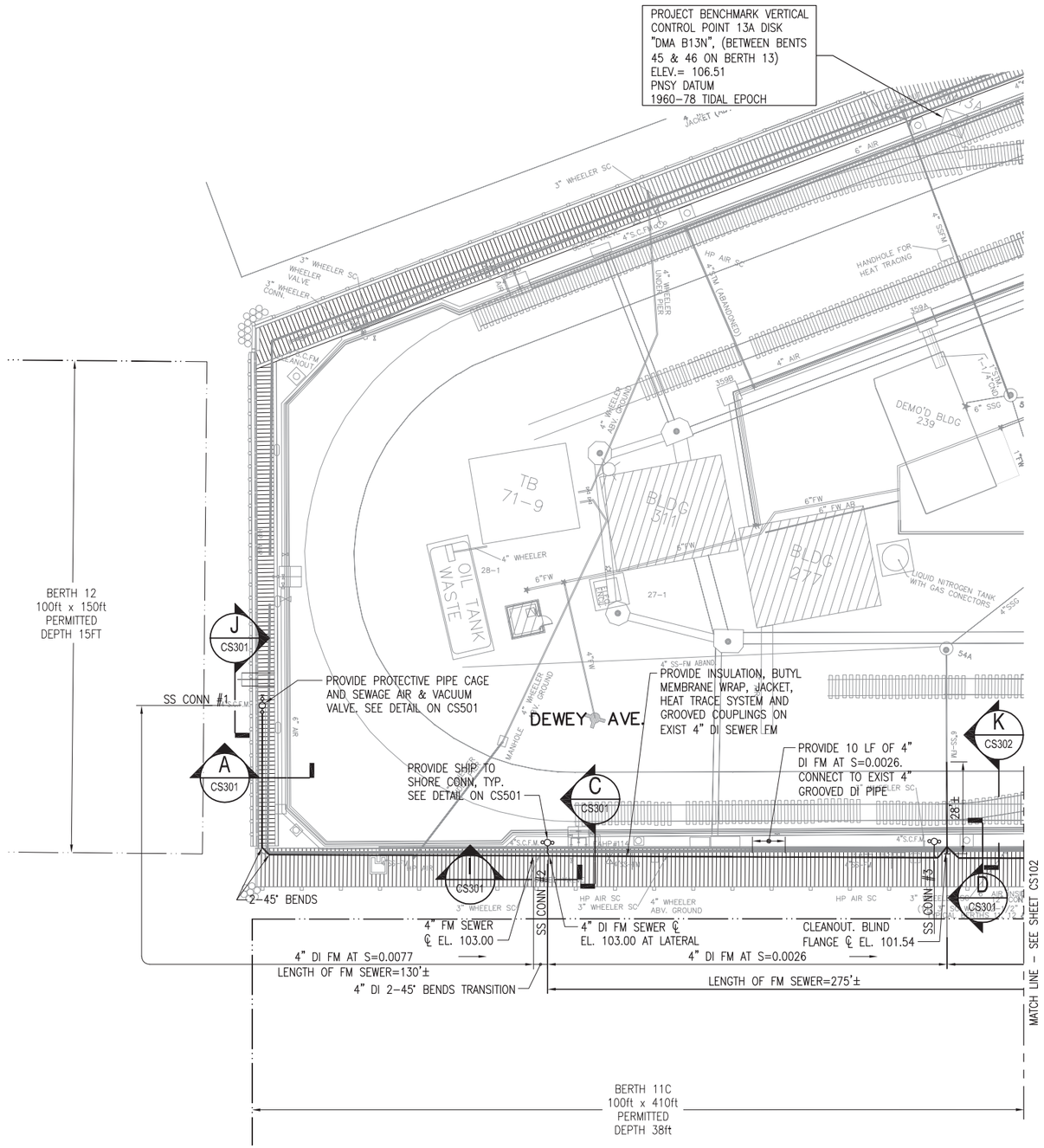

SEWER LAYOUT PLAN - BERTH 12

SCALE: 1" = 20'

KEY PLAN

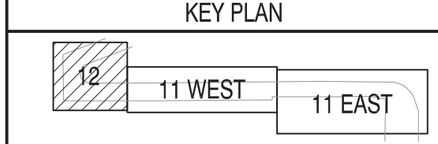

GRAPHIC SCALE

0 10' 20' 40'

SCALE:1"=20'

MARK	DESCRIPTION	DATE	APPR

NAVFAC

STATE OF NEW HAMPSHIRE — BRIAN E. SHEA No. 10359 — LICENSED PROFESSIONAL ENGINEER — 6/21/13 — SEAL

ENGINEERS FST Since 1914
FAY, SPOFFORD & THORNDIKE
5 BURLINGTON WOODS BURLINGTON, MA 01803
A/E INFO

APPROVED
FOR COMMANDER NAVFAC
ACTIVITY
SATISFACTORY TO DATE
DES RHD DRW KTB CHK BES
PWD-ME DM/POC MIKE McCANN
BRANCH MANAGER
CHIEF ENG/ARCH
FIRE PROTECTION

DEPARTMENT OF THE NAVY
NAVAL FACILITIES ENGINEERING COMMAND ~ MID-ATLANTIC
PUBLIC WORKS DEPARTMENT - MAINE
NAVAL FACILITIES ENGINEERING COMMAND
NAVAL SHIPYARD - PORTSMOUTH, NH
PORTSMOUTH NAVAL SHIPYARD
KITTERY, MAINE

REPLACE UTLITIES BERTHS 11 AND 12

SEWER LAYOUT PLAN - BERTH 12

MAXIMO No.: 5918670
EPROJECT NO.: 1171704
CONSTR. CONTR. NO.
NAVFAC DRAWING NO. 12650011
SHEET 11 OF 57
CS101 FP2-13-597

DRAWFORM REVISION: 10 MARCH 2009

FILE NAME: U:\BQ-216K\CADD\Civil\BQ-216K-CS101-03.dwg LAYOUT NAME: CS101 PLOTTED: Tuesday, June 25, 2013 - 10:35am USER: Friber_H

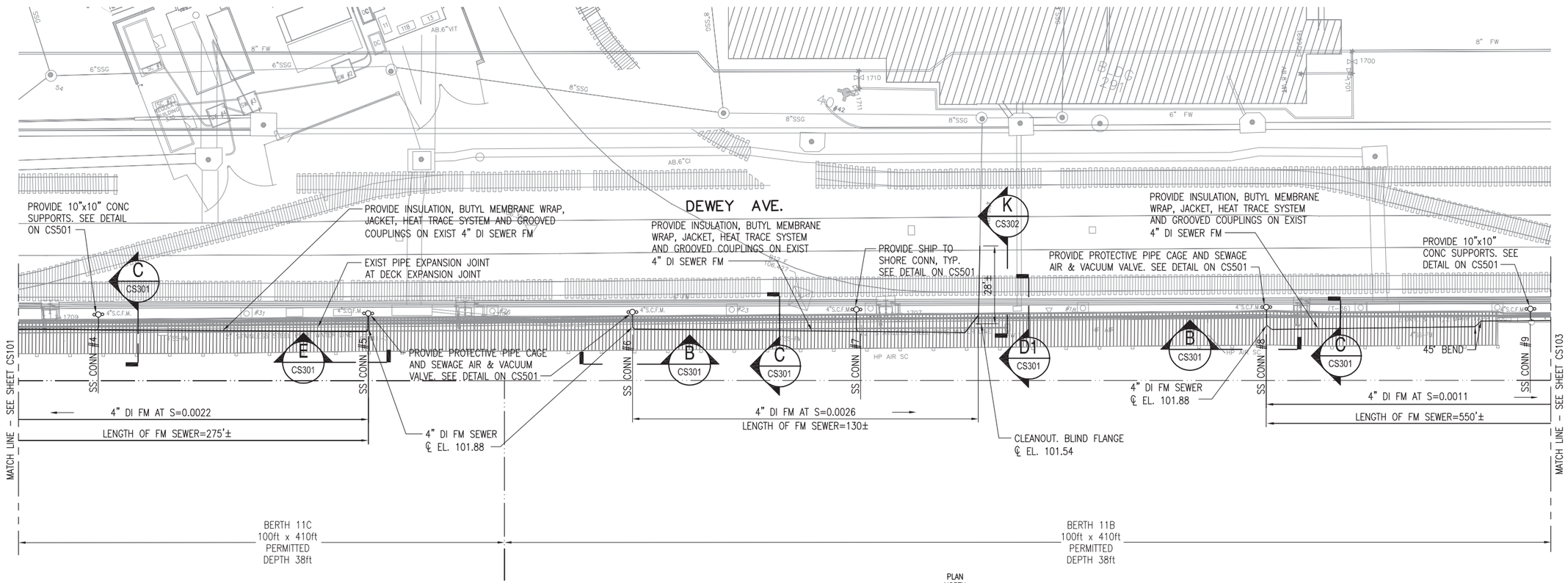

SEWER LAYOUT PLAN - BERTH 11 WEST

SCALE: 1" = 20'

KEY PLAN

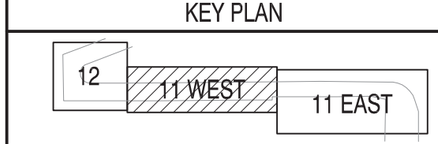

GRAPHIC SCALE

0 10' 20' 40'

SCALE:1"=20'

APPR	DATE	DESCRIPTION	SYM

NAVFAC

STATE OF NEW HAMPSHIRE
BRIAN E. SHEA
No. 10359
LICENSED
PROFESSIONAL ENGINEER
6/21/13
SEAL

ENGINEERS
FST
Since 1914
FAY, SPOFFORD & THORNDIKE
5 BURLINGTON WOODS
BURLINGTON, MA 01803
A/E INFO

APPROVED
FOR COMMANDER NAVFAC
ACTIVITY
SATISFACTORY TO DATE
DES RHD DRW KTB CHK BES
PWD-ME DM/POC MIKE McCANN
BRANCH MANAGER
CHIEF ENG/ARCH
FIRE PROTECTION

DEPARTMENT OF THE NAVY
NAVAL FACILITIES ENGINEERING COMMAND
PUBLIC WORKS DEPARTMENT - MAINE
NAVAL FACILITIES ENGINEERING COMMAND ~ MID-ATLANTIC
NAVAL SHIPYARD - PORTSMOUTH, NH
PORTSMOUTH NAVAL SHIPYARD
KITTERY, MAINE

REPLACE UTLITIES
BERTHS 11 AND 12

SEWER LAYOUT PLAN - BERTH 11 WEST

MAXIMO No.: 5918670
EPROJECT NO.: 1171704
CONSTR. CONTR. NO.
NAVFAC DRAWING NO.
12650012
SHEET 12 OF 57
CS102 FP2-13-598

DRAWFORM REVISION: 10 MARCH 2009

FILE NAME: U:\BQ-2166\CADD\Civil\BQ-2166--CS101-03.dwg LAYOUT NAME: CS102 PLOTTED: Tuesday, June 25, 2013 - 10:35am USER: Fribar_H

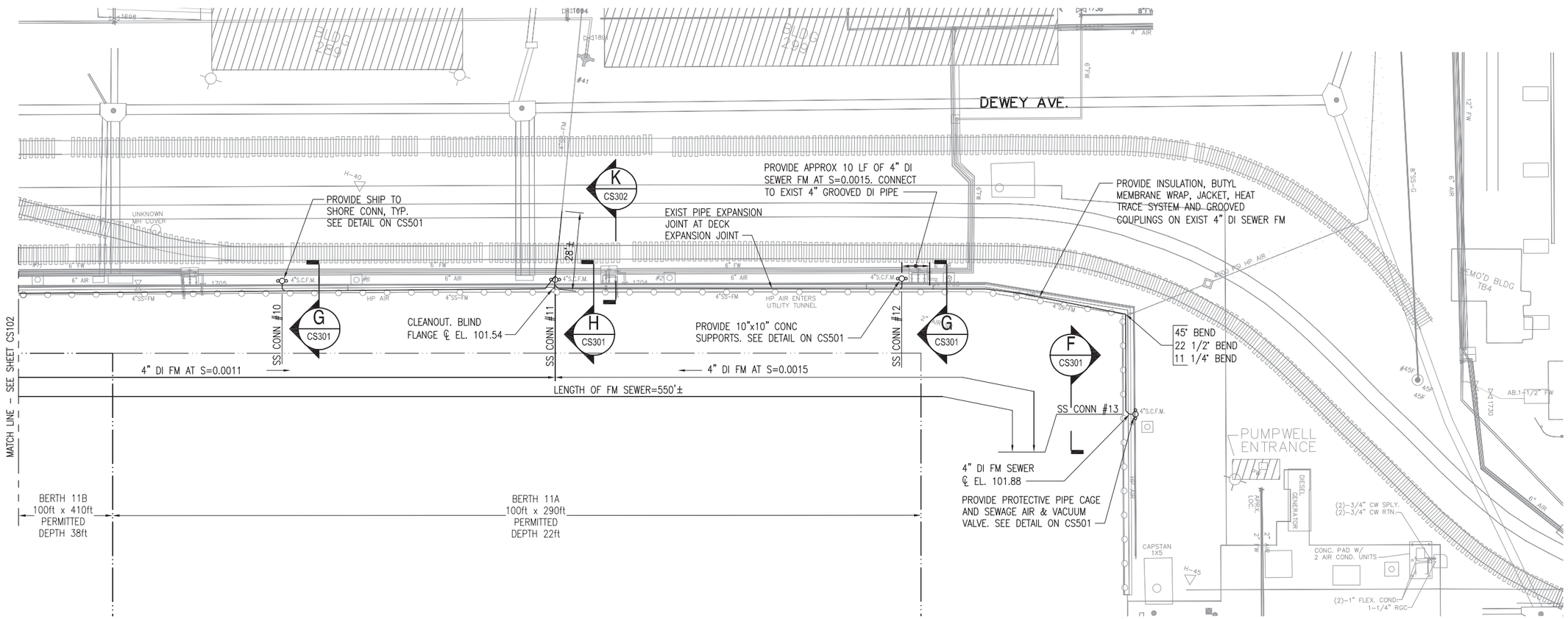

SEWER LAYOUT PLAN - BERTH 11 EAST

SCALE: 1" = 20'

PLAN NORTH

KEY PLAN

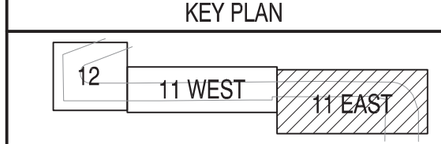

GRAPHIC SCALE

0 10' 20' 40'

SCALE:1"=20'

MKS	STM	DESCRIPTION	DATE	APPR

NAVFAC

STATE OF NEW HAMPSHIRE — BRIAN E. SHEA No. 10359 LICENSED PROFESSIONAL ENGINEER — 6/21/13 — SEAL

ENGINEERS FST Since 1914
FAY, SPOFFORD & THORNDIKE
5 BURLINGTON WOODS BURLINGTON, MA 01803
A/E INFO

APPROVED
FOR COMMANDER NAVFAC
ACTIVITY
SATISFACTORY TO DATE
DES RHD DRW KTB CHK BES
PWD-ME DM/POC MIKE McCANN
BRANCH MANAGER
CHIEF ENG/ARCH
FIRE PROTECTION

DEPARTMENT OF THE NAVY
NAVAL FACILITIES ENGINEERING COMMAND
PUBLIC WORKS DEPARTMENT – MAINE
PORTSMOUTH NAVAL SHIPYARD

NAVAL FACILITIES ENGINEERING COMMAND ~ MID-ATLANTIC
NAVAL SHIPYARD – PORTSMOUTH, NH
KITTERY, MAINE

REPLACE UTLITIES BERTHS 11 AND 12

SEWER LAYOUT PLAN – BERTH 11 EAST

MAXIMO No.: 5918670
EPROJECT NO.: 1171704
CONSTR. CONTR. NO.
NAVFAC DRAWING NO. 12650013
SHEET 13 OF 57
CS103 FP2-13-599

DRAWFORM REVISION: 10 MARCH 2009

FILE NAME: U:\BQ-216K\CADD\Civil\BQ-216K-CS101-03.dwg LAYOUT NAME: CS103 PLOTTED: Tuesday, June 25, 2013 - 10:35am USER: Friber_H

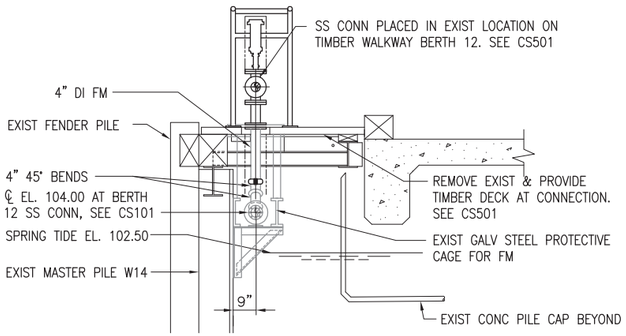

SECTION A
SCALE: 3/8"=1'-0" CS101

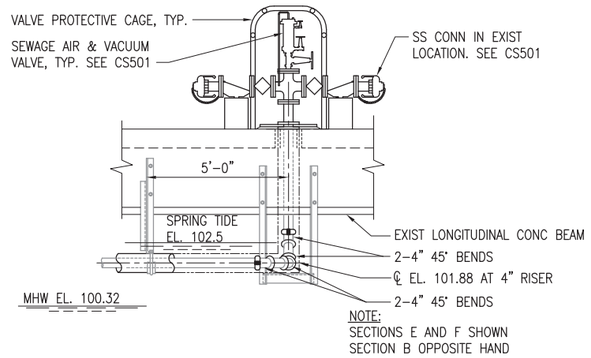

SECTION B E F
SCALE: 3/8"=1'-0" CS102, CS103

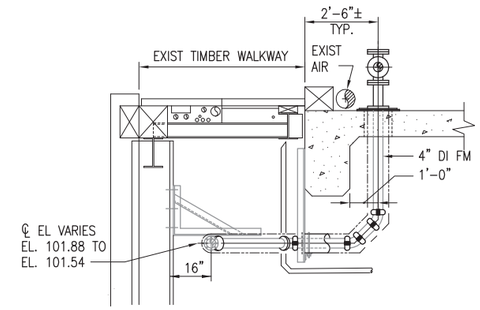

SECTION C
SCALE: 3/8"=1'-0" CS101, CS102

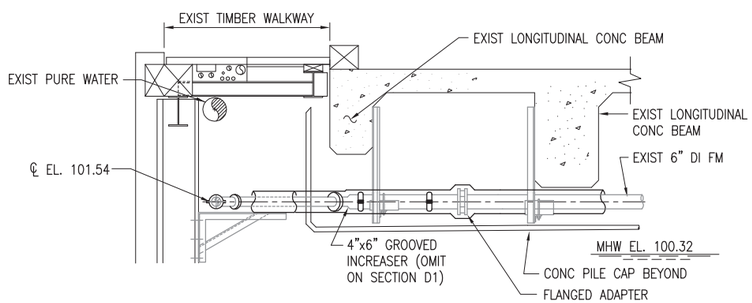

SECTION D D1
SCALE: 3/8"=1'-0" CS101, CS102

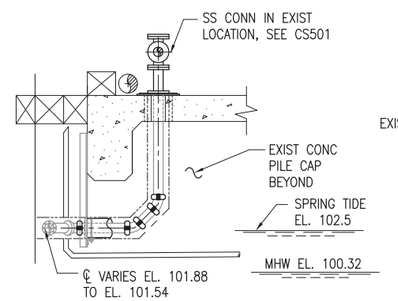

SECTION G
SCALE: 3/8"=1'-0" CS103

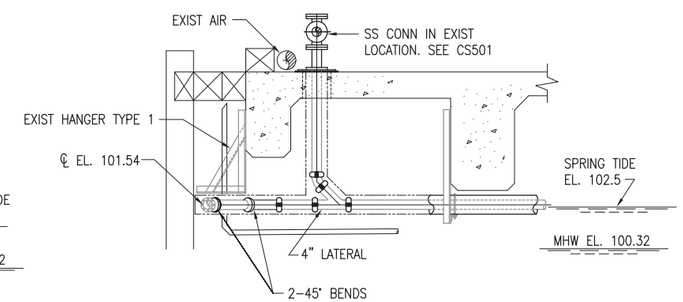

SECTION H
SCALE: 3/8"=1'-0" CS103

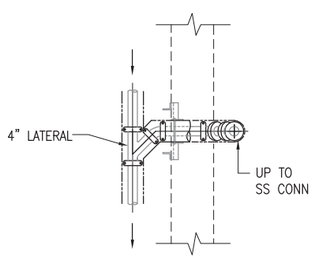

TYPICAL PLAN SHIP TO SHORE CONNECTION
SCALE: 3/8"=1'-0"

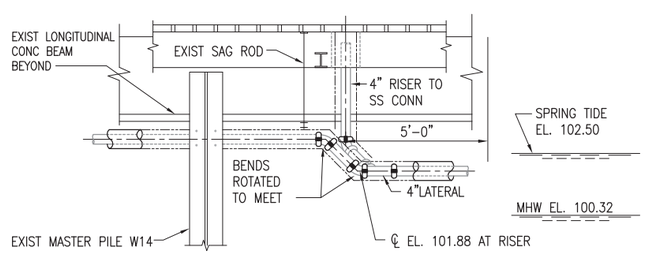

SECTION I
SCALE: 3/8"=1'-0" CS101

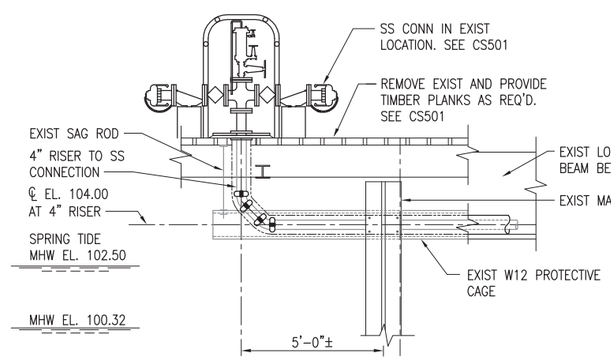

SECTION J
SCALE: 3/8"=1'-0" CS101

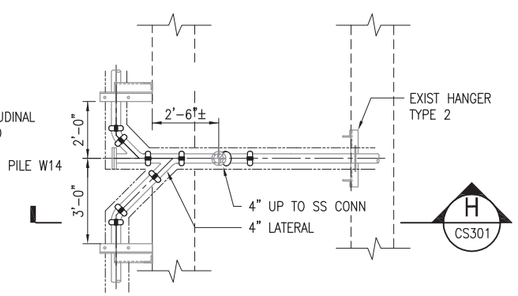

PLAN AT SECTION H
SCALE: 3/8"=1'-0"

GRAPHIC SCALE
0 2' 4' 6'
SCALE:3/8"=1'

APPR	DATE	DESCRIPTION	SYM

NAVFAC

STATE OF NEW HAMPSHIRE — BRIAN E. SHEA No. 10359 LICENSED PROFESSIONAL ENGINEER — 6/21/13 — SEAL

ENGINEERS FST Since 1914
FAY, SPOFFORD & THORNDIKE
5 BURLINGTON WOODS BURLINGTON, MA 01803
A/E INFO

APPROVED
FOR COMMANDER NAVFAC
ACTIVITY
SATISFACTORY TO DATE
DES RHD DRW KTB CHK BES
PWD-ME DM/POC MIKE McCANN
BRANCH MANAGER
CHIEF ENG/ARCH
FIRE PROTECTION

DEPARTMENT OF THE NAVY
NAVAL FACILITIES ENGINEERING COMMAND
PUBLIC WORKS DEPARTMENT – MAINE
PORTSMOUTH NAVAL SHIPYARD

NAVAL FACILITIES ENGINEERING COMMAND ~ MID-ATLANTIC
NAVAL SHIPYARD – PORTSMOUTH, NH
KITTERY, MAINE

REPLACE UTLITIES BERTHS 11 AND 12

SEWER SECTIONS – SHEET 1 OF 2

MAXIMO No.: 5918670
EPROJECT NO.: 1171704
CONSTR. CONTR. NO.
NAVFAC DRAWING NO. 12650014
SHEET 14 OF 57
CS301 FP2-13-600

DRAWFORM REVISION: 10 MARCH 2009

FILE NAME: U:\BG-216K\CADD\Civil\BG-216K-CS301-02.dwg LAYOUT NAME: CS301 PLOTTED: Tuesday, June 25, 2013 - 10:36am USER: Friber_H

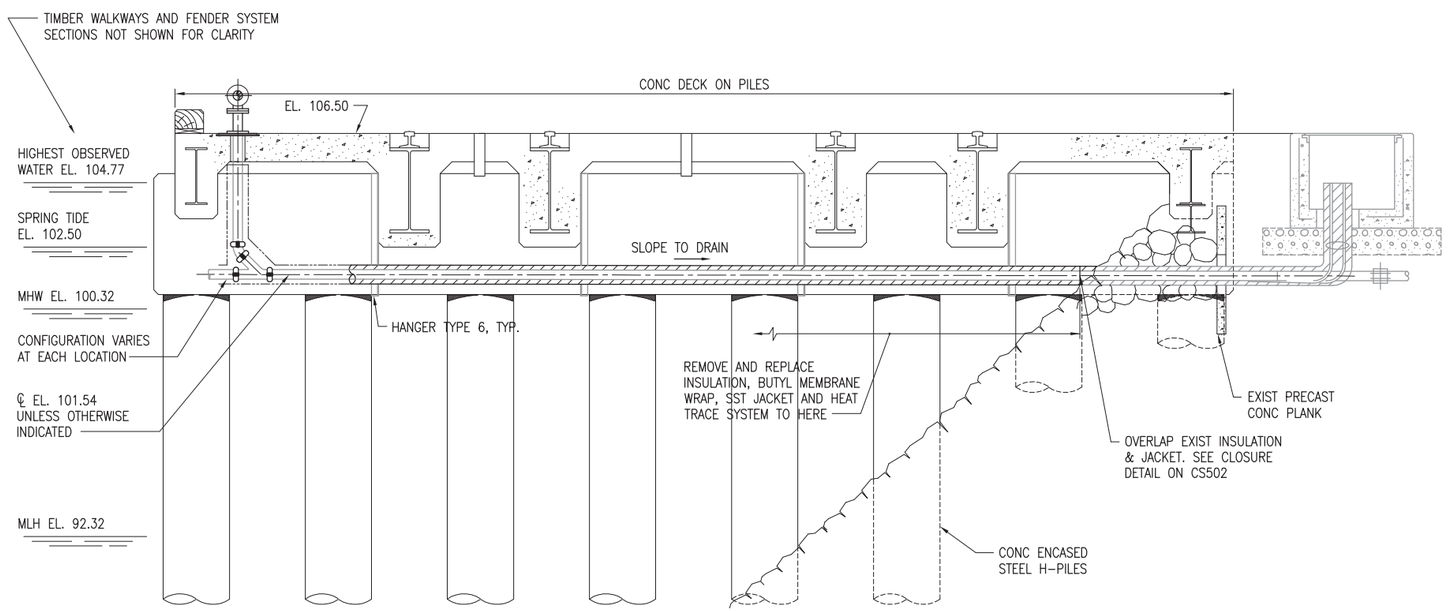

SECTION K

SCALE: 3/8"=1'-0" CS101, CS102, CS103

STM	DESCRIPTION	DATE	APPR

NAVFAC

STATE OF NEW HAMPSHIRE — BRIAN E. SHEA No. 10359 — LICENSED PROFESSIONAL ENGINEER — 6/21/13

SEAL

ENGINEERS FST Since 1914

FAY, SPOFFORD & THORNDIKE
5 BURLINGTON WOODS
BURLINGTON, MA 01803

A/E INFO

APPROVED

FOR COMMANDER NAVFAC

ACTIVITY

SATISFACTORY TO DATE

DES RHD | DRW KTB | CHK BES

PWD-ME DM/POC MIKE McCANN

BRANCH MANAGER

CHIEF ENG/ARCH

FIRE PROTECTION

DEPARTMENT OF THE NAVY
NAVAL FACILITIES ENGINEERING COMMAND
PUBLIC WORKS DEPARTMENT - MAINE

NAVAL FACILITIES ENGINEERING COMMAND – MID-ATLANTIC
NAVAL SHIPYARD – PORTSMOUTH, NH

PORTSMOUTH NAVAL SHIPYARD

KITTERY, MAINE

REPLACE UTLITIES BERTHS 11 AND 12

SEWER SECTIONS – SHEET 2 OF 2

MAXIMO No.: 5918670

EPROJECT NO.: 1171704

CONSTR. CONTR. NO.

NAVFAC DRAWING NO. 12650015

SHEET 15 OF 57

CS302 | FP2-13-601

DRAWFORM REVISION: 10 MARCH 2009

GRAPHIC SCALE

0 2' 4' 6'

SCALE:3/8"=1'

FILE NAME: U:\BO-216K\DWG\Civil\BO-216K-CS301-02.dwg LAYOUT NAME: CS302 PLOTTED: Tuesday, June 25, 2013 - 10:36am USER: Friber_JH

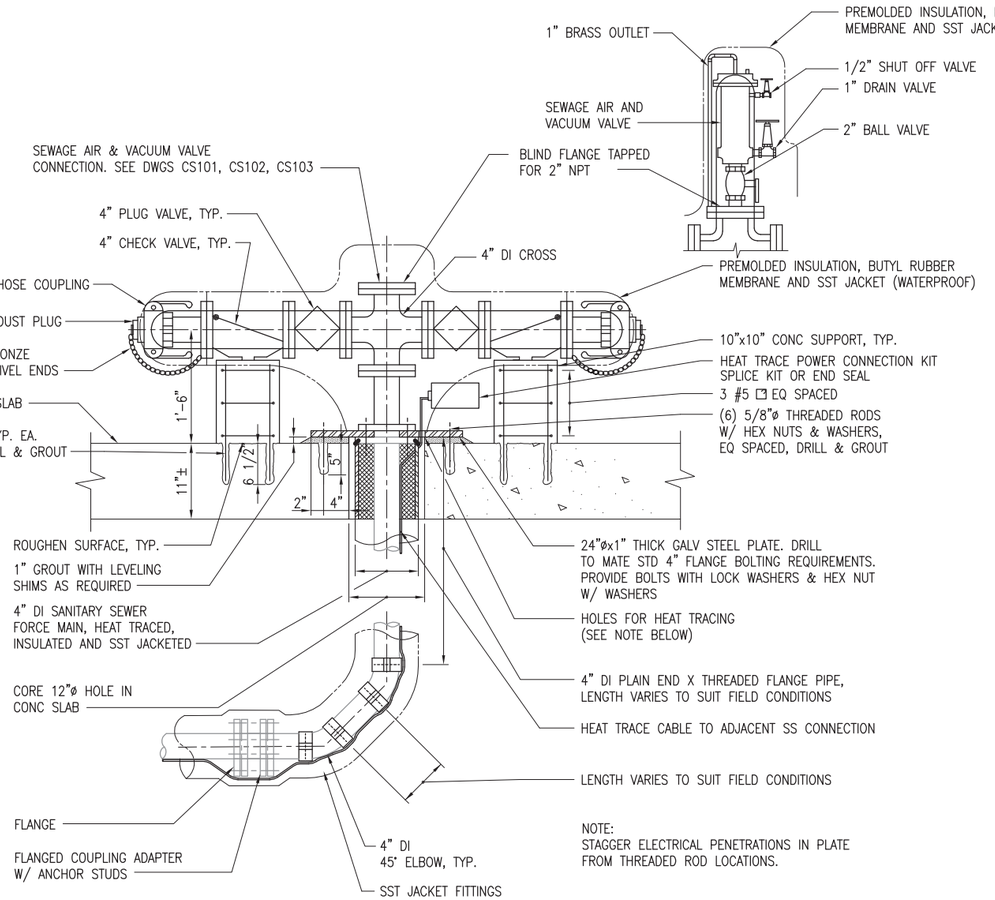

NOTE:
STAGGER ELECTRICAL PENETRATIONS IN PLATE FROM THREADED ROD LOCATIONS.

SHIP TO SHORE SEWER CONNECTION BERTH 11

SCALE: 1"=1'-0"

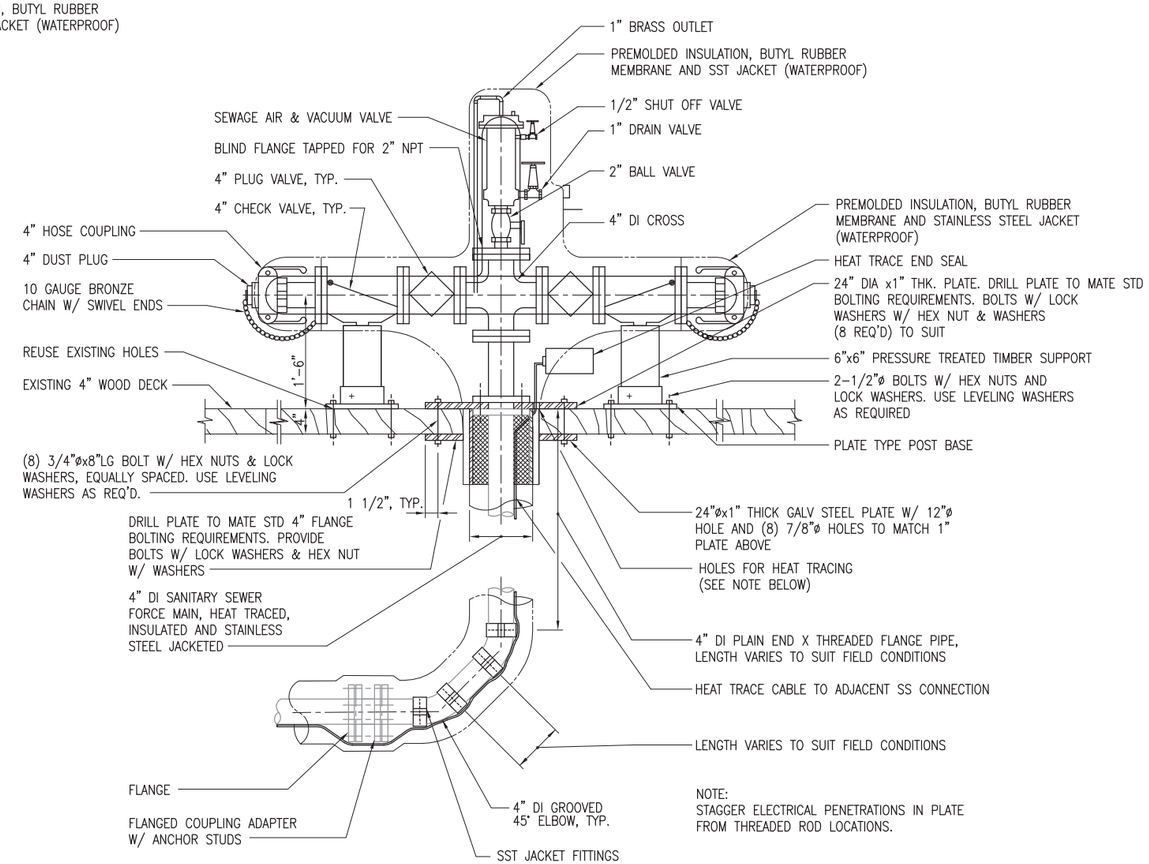

NOTE:
STAGGER ELECTRICAL PENETRATIONS IN PLATE FROM THREADED ROD LOCATIONS.

SHIP TO SHORE SEWER CONNECTION TIMBER WALKWAY AT BERTH 12

SCALE: 1"=1'-0"

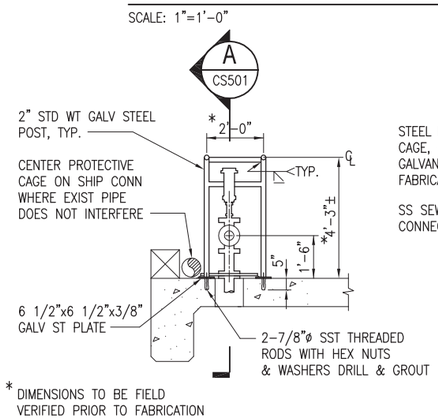

ELEVATION

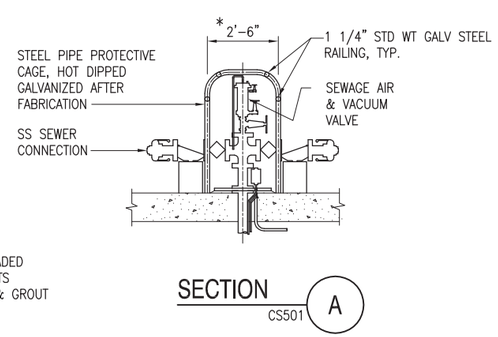

SECTION

PROTECTIVE PIPE CAGE AT SEWAGE AIR & VACUUM VALVE

SCALE: 3/8"=1'-0"

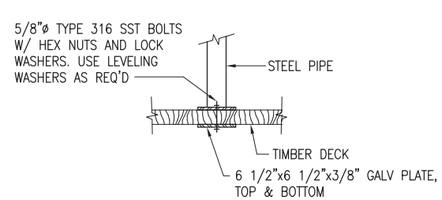

SUPPORT AT TIMBER DECK

SCALE: 1 1/2"=1'-0"

GRAPHIC SCALE

SCALE:3/8"=1' (0, 2', 4', 6')

SCALE:1"=1' (0, 1', 2')

SCALE:1-1/2"=1' (0, 6", 1', 2')

APPR	DATE	DESCRIPTION	SYM

NAVFAC

STATE OF NEW HAMPSHIRE — BRIAN E. SHEA No. 10359 LICENSED PROFESSIONAL ENGINEER — 6/21/13 — SEAL

ENGINEERS FST Since 1914
FAY, SPOFFORD & THORNDIKE
5 BURLINGTON WOODS BURLINGTON, MA 01803
A/E INFO

APPROVED
FOR COMMANDER NAVFAC
ACTIVITY
SATISFACTORY TO DATE
DES RHD | DRW KTB | CHK BES
PWD-ME DM/POC MIKE McCANN
BRANCH MANAGER
CHIEF ENG/ARCH
FIRE PROTECTION

DEPARTMENT OF THE NAVY
NAVAL FACILITIES ENGINEERING COMMAND
PUBLIC WORKS DEPARTMENT – MAINE
NAVAL FACILITIES ENGINEERING COMMAND ~ MID-ATLANTIC
NAVAL SHIPYARD – PORTSMOUTH, NH
PORTSMOUTH NAVAL SHIPYARD
KITTERY, MAINE

REPLACE UTLITIES
BERTHS 11 AND 12

SEWER DETAILS – SHEET 1 OF 2

MAXIMO No.: 5918670
EPROJECT NO.: 1171704
CONSTR. CONTR. NO.
NAVFAC DRAWING NO. 12650016
SHEET 16 OF 57
CS501 | FP2-13-602

DRAWFORM REVISION: 10 MARCH 2009

FILE NAME: U:\BO-216K\DA00\Civil\BO-216K-CS501-02.dwg LAYOUT NAME: CS501 PLOTTED: Tuesday, June 25, 2013 - 10:36am USER: Friber_JH