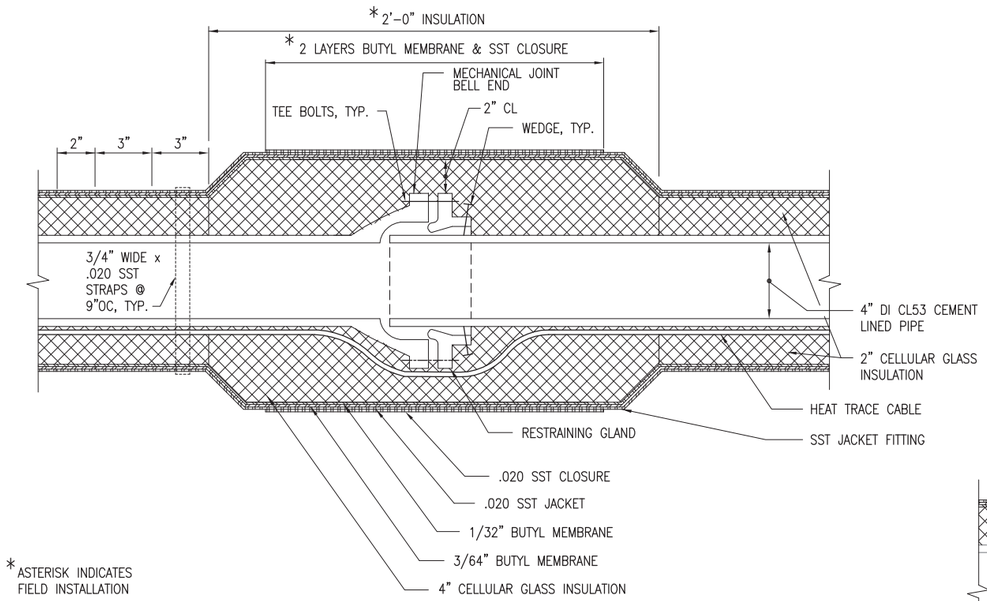

SEWER FORCE MAIN AT RESTRAINED MECHANICAL JOINT

SCALE: 3"=1'-0"

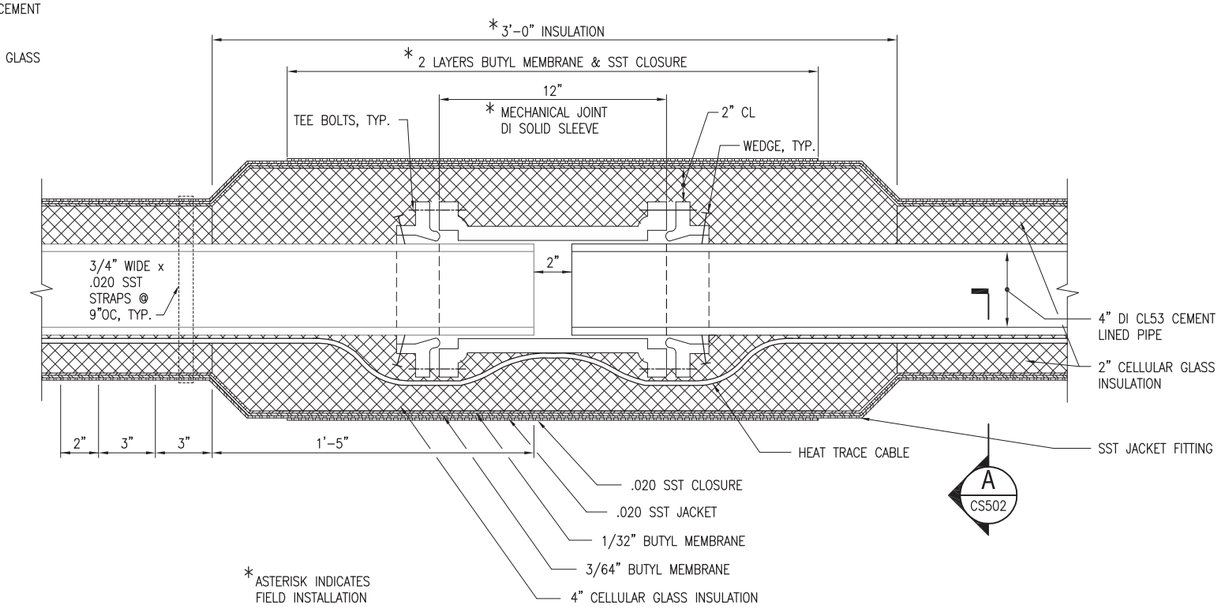

SEWER FORCE MAIN AT MECHANICAL JOINT SOLID SLEEVE

SCALE: 3"=1'-0"

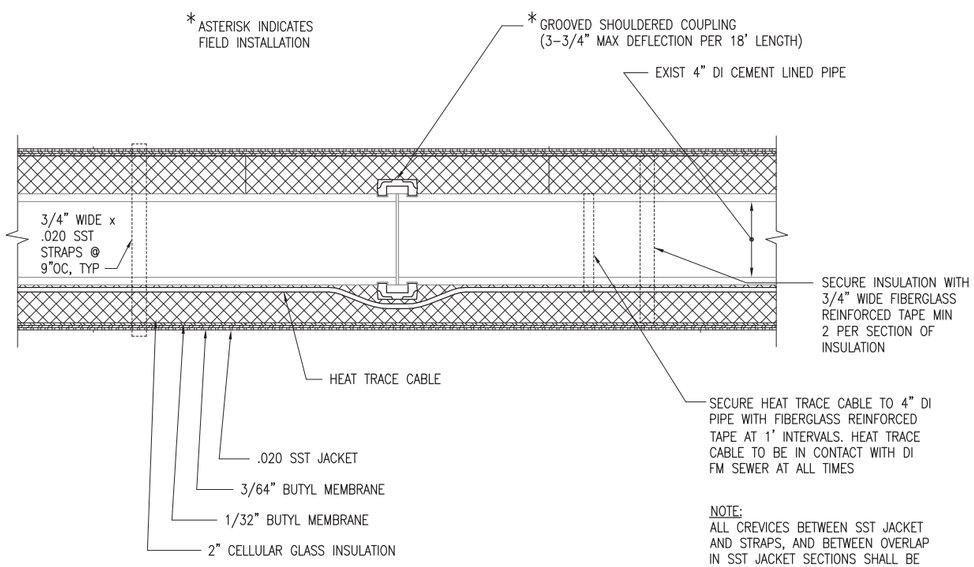

NOTE:
ALL CREVICES BETWEEN SST JACKET AND STRAPS, AND BETWEEN OVERLAP IN SST JACKET SECTIONS SHALL BE PAINTED WITH SILICONE SEALANT.

FORCE MAIN AT GROOVED PIPE CONNECTION

SCALE: 3"=1'-0"

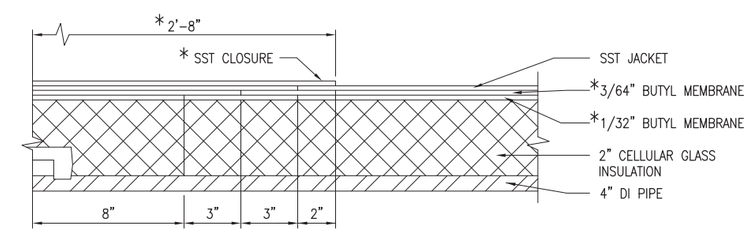

*ASTERISK INDICATES FIELD INSTALLATION

CLOSURE DETAIL

NOT TO SCALE

GRAPHIC SCALE

0 3" 6" 9" 12"

SCALE: 3"=1'

APPR	DATE	DESCRIPTION	STM

NAVFAC

STATE OF NEW HAMPSHIRE — BRIAN E. SHEA No. 10359 — LICENSED PROFESSIONAL ENGINEER — 6/21/13 — SEAL

ENGINEERS FST Since 1914
FAY, SPOFFORD & THORNDIKE
5 BURLINGTON WOODS
BURLINGTON, MA 01803
A/E INFO

APPROVED
FOR COMMANDER NAVFAC
ACTIVITY
SATISFACTORY TO DATE
DES RHD DRW KTB CHK BES
PWD-ME DM/POC MIKE McCANN
BRANCH MANAGER
CHIEF ENG/ARCH
FIRE PROTECTION

DEPARTMENT OF THE NAVY
NAVAL FACILITIES ENGINEERING COMMAND
PUBLIC WORKS DEPARTMENT – MAINE
NAVAL FACILITIES ENGINEERING COMMAND ~ MID-ATLANTIC
NAVAL SHIPYARD – PORTSMOUTH, NH
PORTSMOUTH NAVAL SHIPYARD
KITTERY, MAINE
REPLACE UTLITIES BERTHS 11 AND 12
SEWER DETAILS – SHEET 2 OF 2

MAXIMO No.: 5918670
EPROJECT NO.: 1171704
CONSTR. CONTR. NO.
NAVFAC DRAWING NO. 12650017
SHEET 17 OF 57
CS502 FP2-13-603
DRAWFORM REVISION: 10 MARCH 2009

FILE NAME: U:\B0-216K\CADD\Civil\B0-216K-CS501-02.dwg LAYOUT NAME: CS502 PLOTTED: Tuesday, June 25, 2013 - 10:36am USER: Friber_JH

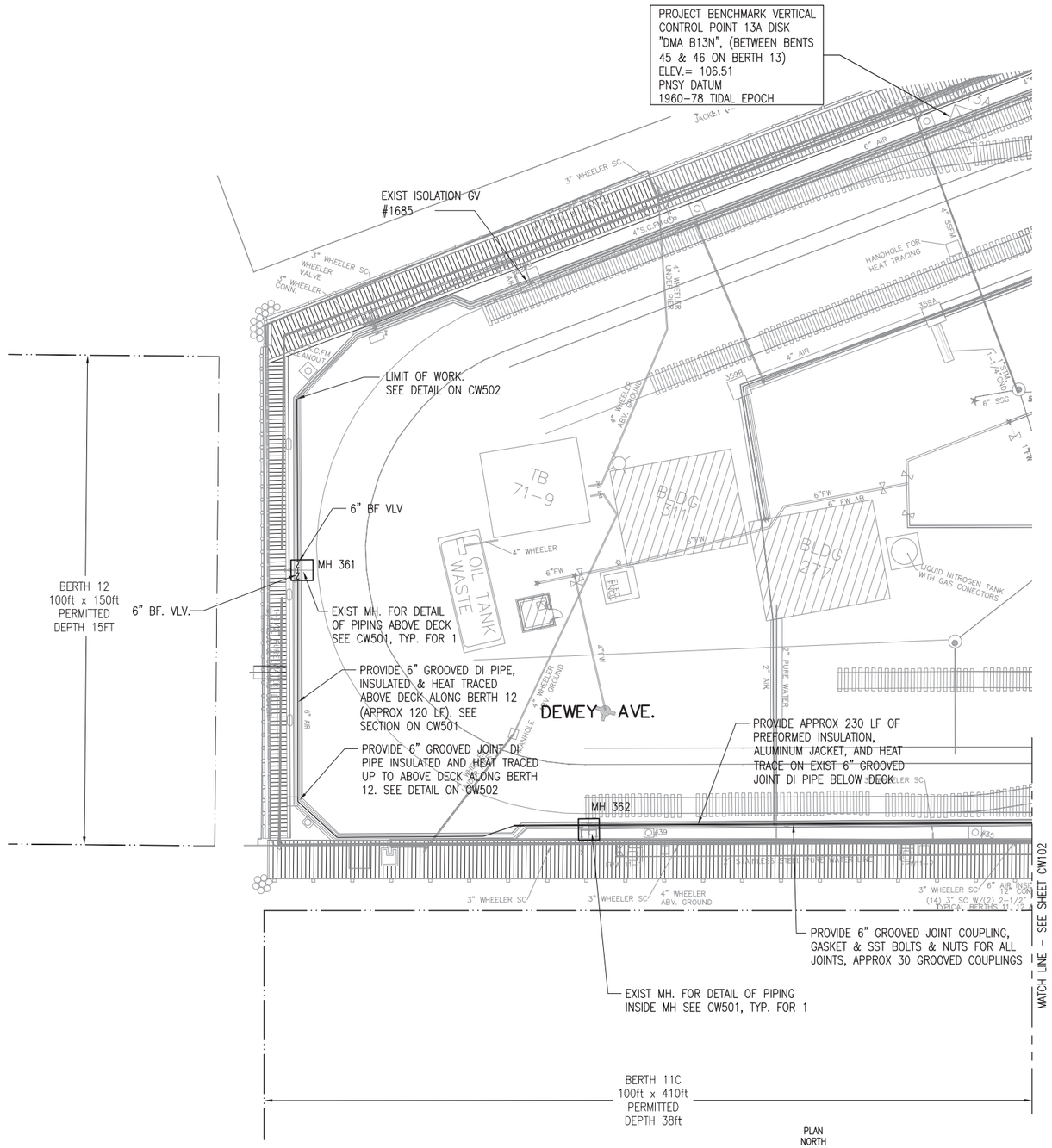

FRESH WATER LAYOUT PLAN - BERTH 12

SCALE: 1" = 20'

KEY PLAN

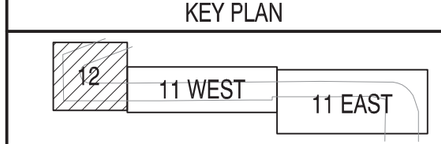

GRAPHIC SCALE

0 10' 20' 40'

SCALE:1"=20'

APPR	DATE	DESCRIPTION	SYM

NAVFAC

COMMONWEALTH OF MASSACHUSETTS
JOHN J. AMATO
CIVIL
No. 40188
REGISTERED PROFESSIONAL ENGINEER
6-25-13
SEAL

ENGINEERS
FST
Since 1914
FAY, SPOFFORD & THORNDIKE
5 BURLINGTON WOODS
BURLINGTON, MA 01803
A/E INFO

APPROVED
FOR COMMANDER NAVFAC
ACTIVITY
SATISFACTORY TO DATE
DES JJA DRW HBF CHK JJA
PWD-ME DM/POC MIKE McCANN
BRANCH MANAGER
CHIEF ENG/ARCH
FIRE PROTECTION

DEPARTMENT OF THE NAVY
NAVAL FACILITIES ENGINEERING COMMAND
PUBLIC WORKS DEPARTMENT - MAINE
NAVAL FACILITIES ENGINEERING COMMAND ~ MID-ATLANTIC
NAVAL SHIPYARD - PORTSMOUTH, NH
PORTSMOUTH NAVAL SHIPYARD
KITTERY, MAINE
REPLACE UTLITIES
BERTHS 11 AND 12
FRESH WATER LAYOUT PLAN - BERTH 12

MAXIMO No.: 5918670
EPROJECT No.: 1171704
CONSTR. CONTR. NO.
NAVFAC DRAWING NO.
12650018
SHEET 18 OF 57
CW101 FP2-13-604

DRAWFORM REVISION: 10 MARCH 2009

FILE NAME: U:\BG-216K\CADD\Civil\BG-216K-CW101-03.dwg LAYOUT NAME: CW101 PLOTTED: Monday, July 15, 2013 - 4:32pm USER: Friber_JH

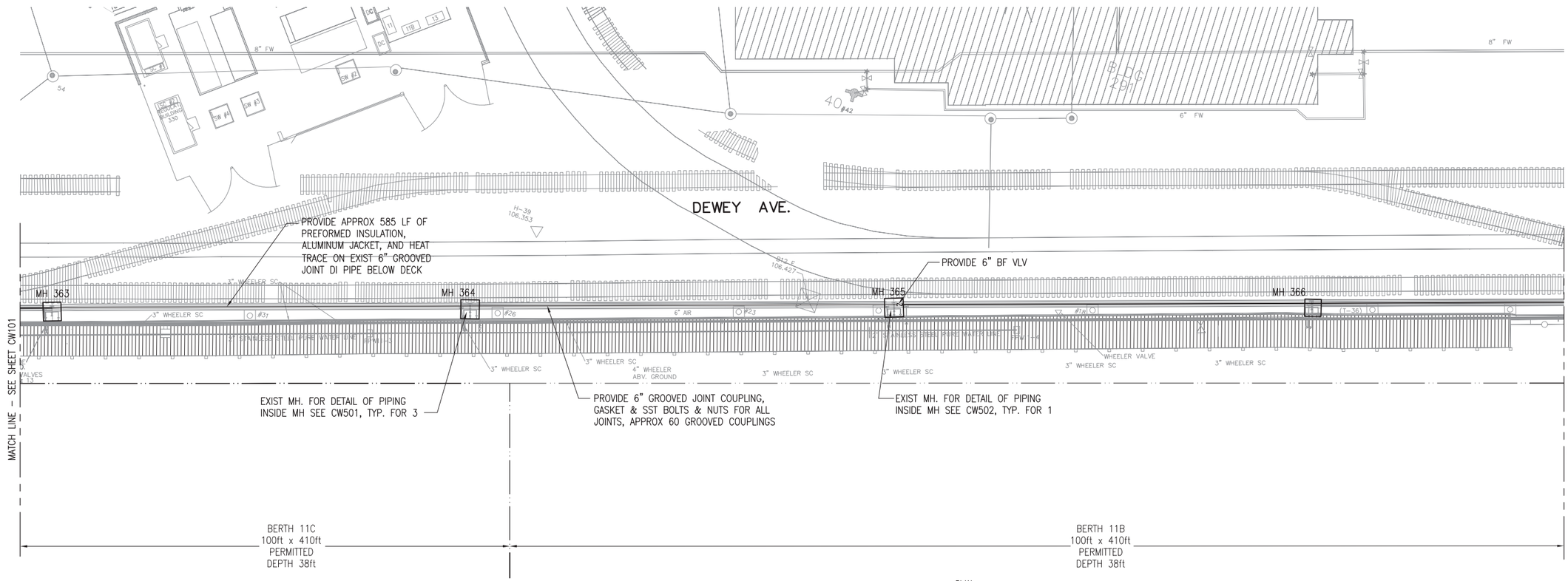

FRESH WATER LAYOUT PLAN - BERTH 11 WEST

SCALE: 1" = 20'

KEY PLAN

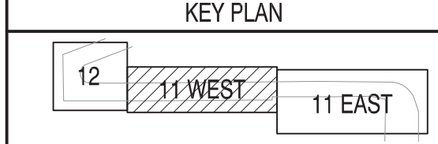

GRAPHIC SCALE

0 10' 20' 40'

SCALE:1"=20'

DES JJA	DRW HBF	CHK JJA	
PWD-ME EM/POC	MIKE McCANN		
BRANCH MANAGER			
CHIEF ENG/ARCH			
FIRE PROTECTION			

DEPARTMENT OF THE NAVY
NAVAL FACILITIES ENGINEERING COMMAND ~ MID-ATLANTIC
PUBLIC WORKS DEPARTMENT ~ MAINE
NAVAL FACILITIES ENGINEERING COMMAND
NAVAL SHIPYARD ~ PORTSMOUTH, NH
PORTSMOUTH NAVAL SHIPYARD
KITTERY, MAINE

REPLACE UTLITIES
BERTHS 11 AND 12

FRESH WATER LAYOUT PLAN ~ BERTH 11 WEST

MAXIMO No.: 5918670
EPROJECT NO.: 1171704
CONSTR. CONTR. NO.
NAVFAC DRAWING NO. 12650019
SHEET 19 OF 57
CW102 | FP2-13-605

DRAWFORM REVISION: 10 MARCH 2009

FILE NAME: U:\BQ-216K\CADD\Civil\BQ-216K-CW101-03.dwg LAYOUT NAME: CW102 PLOTTED: Monday, July 15, 2013 - 4:32pm USER: Friber_H

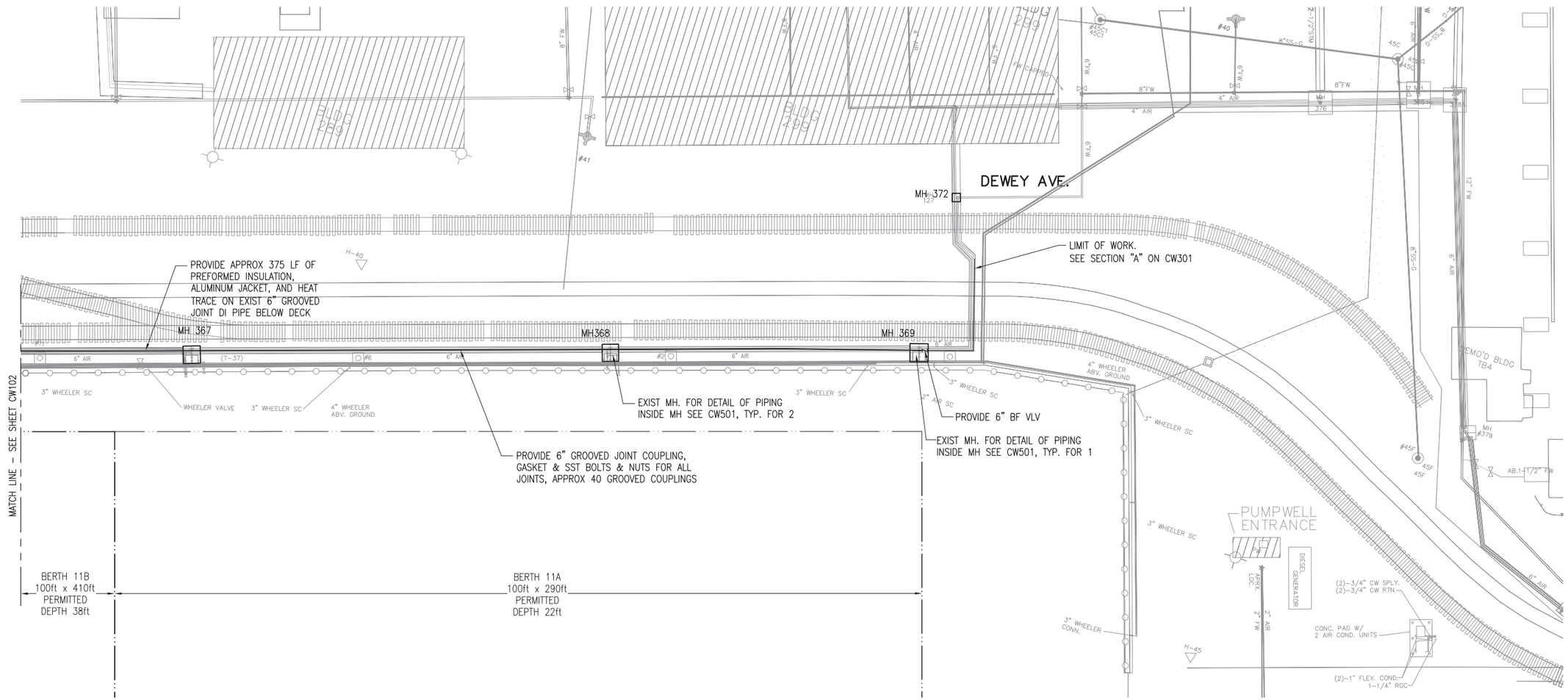

FRESH WATER LAYOUT PLAN - BERTH 11 EAST

SCALE: 1" = 20'

KEY PLAN

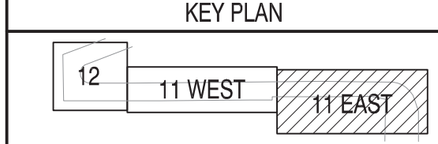

GRAPHIC SCALE

0 10' 20' 40'

SCALE:1"=20'

SYM	DESCRIPTION	DATE	APPR

NAVFAC

COMMONWEALTH OF MASSACHUSETTS
JOHN J. AMATO
CIVIL
No. 40198
REGISTERED PROFESSIONAL ENGINEER
6-25-13
SEAL

ENGINEERS
FST
Since 1914
FAY, SPOFFORD & THORNDIKE
5 BURLINGTON WOODS
BURLINGTON, MA 01803
A/E INFO

APPROVED
FOR COMMANDER NAVFAC
ACTIVITY
SATISFACTORY TO DATE
DES JJA DRW HBF CHK JJA
PWD-ME EM/POC MIKE McCANN
BRANCH MANAGER
CHIEF ENG/ARCH
FIRE PROTECTION

DEPARTMENT OF THE NAVY
NAVAL FACILITIES ENGINEERING COMMAND ~ MID-ATLANTIC
PUBLIC WORKS DEPARTMENT ~ MAINE
NAVAL FACILITIES ENGINEERING COMMAND
NAVAL SHIPYARD ~ PORTSMOUTH, NH
PORTSMOUTH NAVAL SHIPYARD
KITTERY, MAINE

REPLACE UTLITIES
BERTHS 11 AND 12

FRESH WATER LAYOUT PLAN – BERTH 11 EAST

MAXIMO No.: 5918670
EPROJECT NO.: 1171704
CONSTR. CONTR. NO.
NAVFAC DRAWING NO.
12650020
SHEET 20 OF 57
CW103 FP2-13-606

DRAWFORM REVISION: 10 MARCH 2009

FILE NAME: U:\BQ-216K\CADD\Civil\BQ-216K-CW101-103.dwg LAYOUT NAME: CW103 PLOTTED: Monday, July 15, 2013 - 4:32pm USER: Friber_H

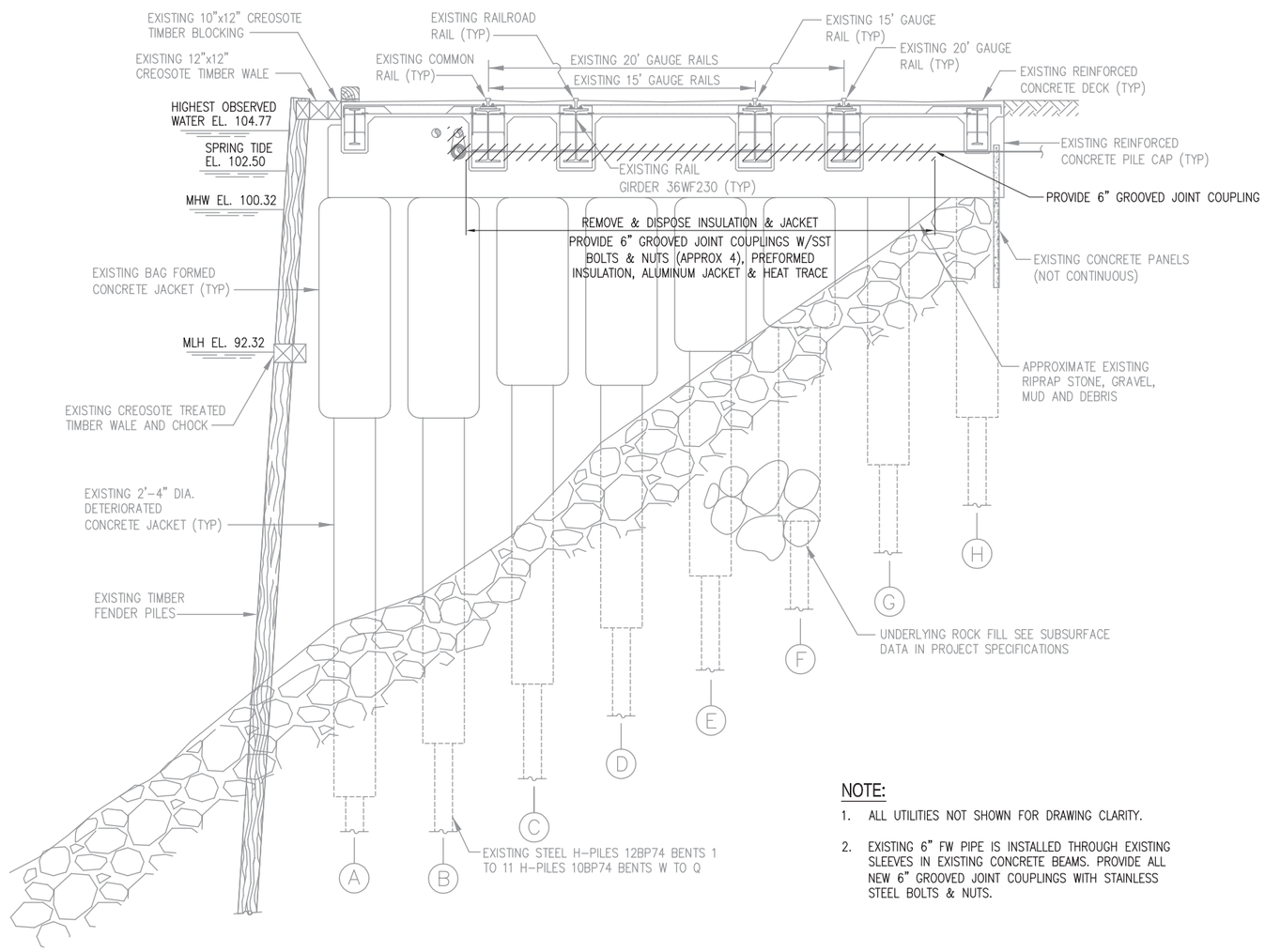

NOTE:

1. ALL UTILITIES NOT SHOWN FOR DRAWING CLARITY.
2. EXISTING 6" FW PIPE IS INSTALLED THROUGH EXISTING SLEEVES IN EXISTING CONCRETE BEAMS. PROVIDE ALL NEW 6" GROOVED JOINT COUPLINGS WITH STAINLESS STEEL BOLTS & NUTS.

SECTION A
SCALE: 1/4"=1'-0"
CD103

GRAPHIC SCALE
0 2' 4' 8'
SCALE:1/4"=1'

APPR	DATE	DESCRIPTION	SYM

NAVFAC

COMMONWEALTH OF MASSACHUSETTS
JOHN J. AMATO
CIVIL
No. 40195
REGISTERED PROFESSIONAL ENGINEER
6-25-13
SEAL

ENGINEERS
FST
Since 1914
FAY, SPOFFORD & THORNDIKE
5 BURLINGTON WOODS
BURLINGTON, MA 01803
A/E INFO

APPROVED
FOR COMMANDER NAVFAC
ACTIVITY
SATISFACTORY TO DATE
DES JJA DRW HBF CHK JJA
PWD-ME DM/POC MIKE McCANN
BRANCH MANAGER
CHIEF ENG/ARCH
FIRE PROTECTION

DEPARTMENT OF THE NAVY
NAVAL FACILITIES ENGINEERING COMMAND
PUBLIC WORKS DEPARTMENT – MAINE
NAVAL FACILITIES ENGINEERING COMMAND ~ MID-ATLANTIC
NAVAL SHIPYARD – PORTSMOUTH, NH
PORTSMOUTH NAVAL SHIPYARD
KITTERY, MAINE
REPLACE UTLITIES
BERTHS 11 AND 12
WATER SECTIONS

MAXIMO No.: 5918670
EPROJECT NO.: 1171704
CONSTR. CONTR. NO.
NAVFAC DRAWING NO.
12650021
SHEET 21 OF 57
CW301 FP2-13-607

DRAWFORM REVISION: 10 MARCH 2009

FILE NAME: U:\BQ-216K\CADD\Civil\BQ-216K-CW301.dwg LAYOUT NAME: CW301 PLOTTED: Monday, July 15, 2013 - 4:32pm USER: Friber_H

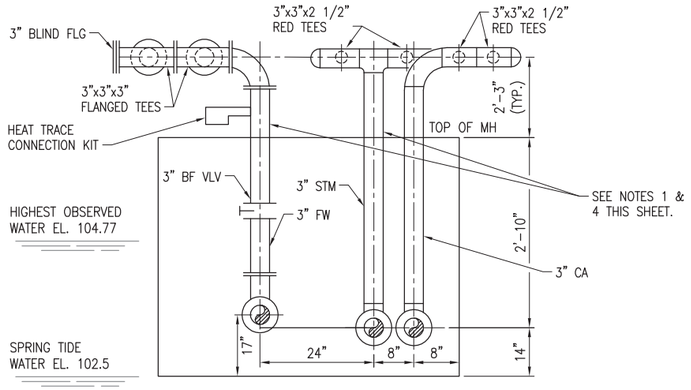

SECTION B

SCALE: 3/4"=1'-0" CW501

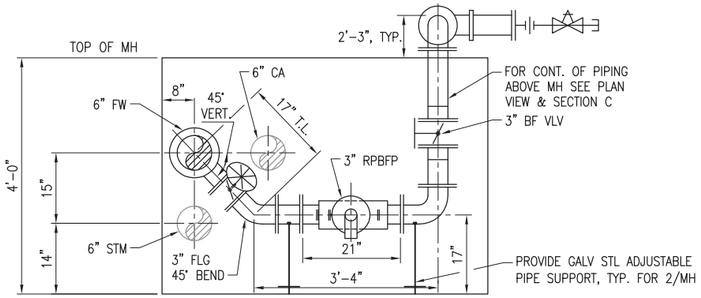

SECTION A

SCALE: 3/4"=1'-0" CW501

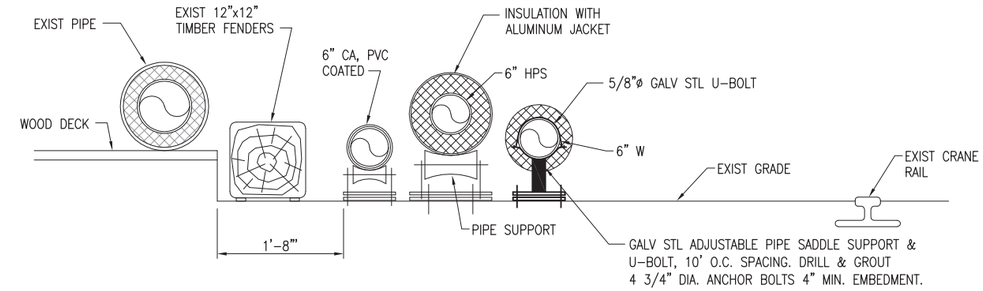

SECTION - UTILITIES ON BERTH 12

SCALE: 1" = 1'-0" CW101, CW102, CW103

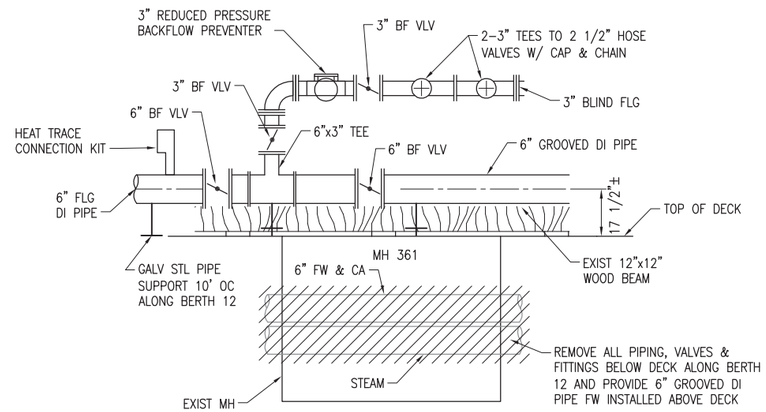

SECTION C

SCALE: 3/4"=1'-0" CW501

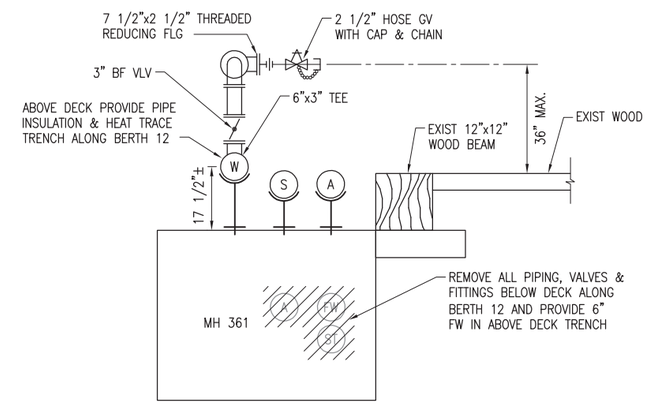

SECTION D

SCALE: 3/4"=1'-0" CW501

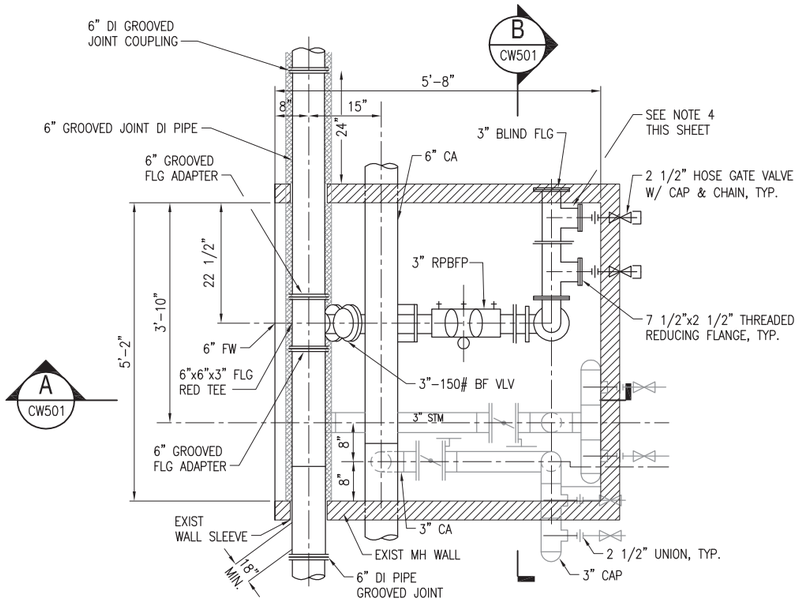

MANHOLE 362, 363, 364, 366, 367 & 368 - PLAN VIEW

SCALE: 3/4"=1'-0"

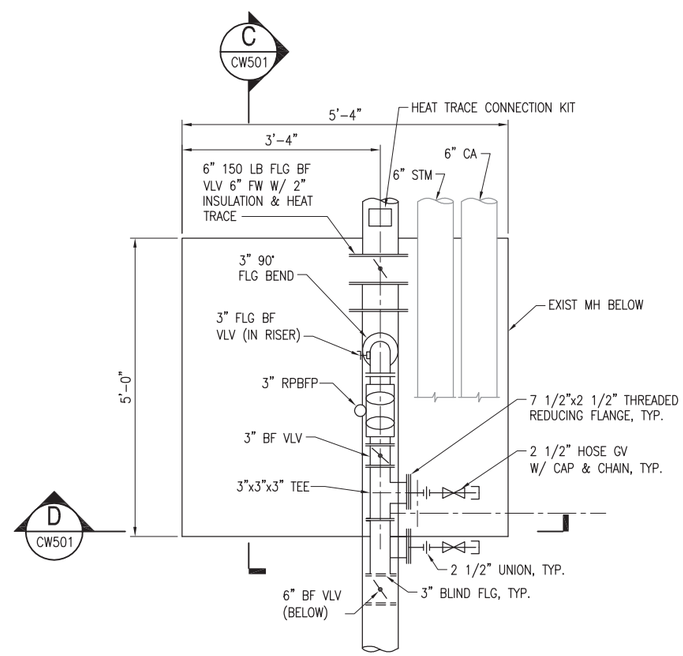

MANHOLE 361 - PLAN VIEW

SCALE: 3/4"=1'-0"

NOTES:

1. UTILITY STATIONS TO BE LOCATED TO THE WATER SIDE OF MANHOLE.
2. FOR MANHOLE PIPE SUPPORT, USE GALVANIZED STEEL, ADJUSTABLE TYPE.
3. ALL FW PIPING SHALL BE INSULATED AND HEAT TRACED. DO NOT INSULATE PIPE THROUGH EXISTING SLEEVES. UNLESS EXISTING SLEEVE WILL ACCOMMODATE INSULATION.
4. EXISTING TUBULAR STEEL PIPE SUPPORT MOUNTED ON DECK TO BE RE-USE FOR PIPING SUPPORT.
5. ALL PIPE, VALVES & FITTINGS SHALL HAVE 2" PRE-FORMED PIPE INSULATION & HEAT TRACE INSTALLED IN FIELD.
6. ALL FRESH WATER, PIPE, VALVES & FITTINGS IN MH SHALL BE FLANGED.

GRAPHIC SCALE

0 1' 2' 3' SCALE:3/4"=1'

0 1' 2' SCALE:1"=1'

APPR	DATE	DESCRIPTION	STM

NAVFAC

COMMONWEALTH OF MASSACHUSETTS JOHN J. AMATO CIVIL No. 40195 REGISTERED PROFESSIONAL ENGINEER 6-25-13 SEAL

ENGINEERS FST Since 1914
FAY, SPOFFORD & THORNDIKE
5 BURLINGTON WOODS BURLINGTON, MA 01803
A/E INFO

APPROVED
FOR COMMANDER NAVFAC
ACTIVITY
SATISFACTORY TO DATE
DES JJA DRW HBF CHK JJA
PWD-ME DM/POC MIKE McCANN
BRANCH MANAGER
CHIEF ENG/ARCH
FIRE PROTECTION

DEPARTMENT OF THE NAVY
NAVAL FACILITIES ENGINEERING COMMAND
PUBLIC WORKS DEPARTMENT - MAINE
NAVAL FACILITIES ENGINEERING COMMAND - MID-ATLANTIC
NAVAL SHIPYARD - PORTSMOUTH, NH
PORTSMOUTH NAVAL SHIPYARD
KITTERY, MAINE

REPLACE UTILITIES BERTHS 11 AND 12

DETAILS - SHEET 1 OF 2

MAXIMO No.: 5918670
EPROJECT NO.: 1171704
CONSTR. CONTR. NO.
NAVFAC DRAWING NO. 12650022
SHEET 22 OF 57
CW501 FP2-13-608

DRAWFORM REVISION: 10 MARCH 2009

FILE NAME: U:\BO-216K\CADD\Civil\BO-216K-CW501-02.dwg LAYOUT NAME: CW501 PLOTTED: Monday, July 15, 2013 - 4:32pm USER: Friber_H

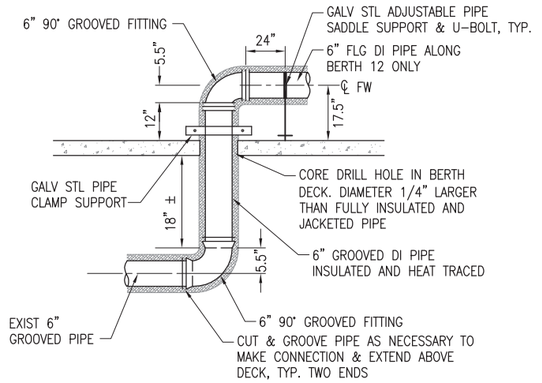

RISER PIPE CONNECTION DETAIL @ BERTH 12, TYPICAL FOR 2 (EAST & WEST ENDS)

SCALE: 1/2" = 1'-0" CW101

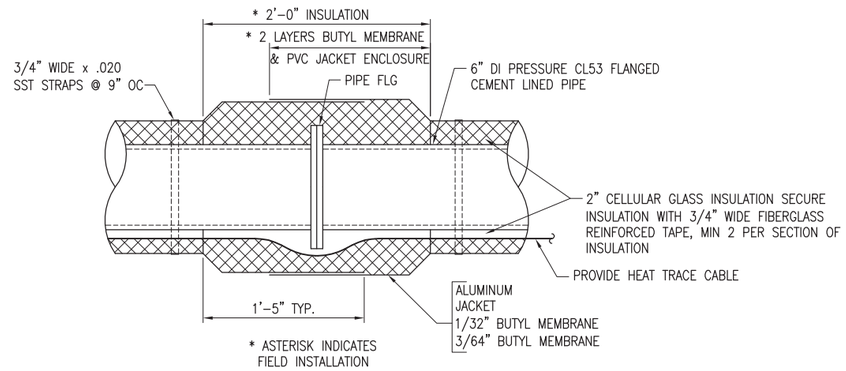

FLANGED FRESH WATER INSULATION DETAIL

SCALE: 3/4" = 1'-0"

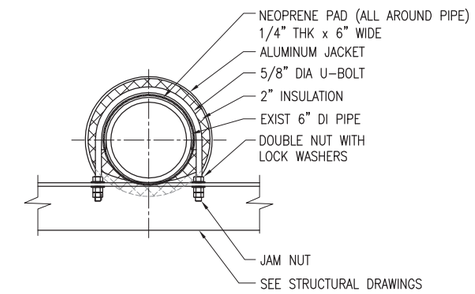

TYPICAL PIPE GUIDE AND SUPPORT

SCALE: 3/4" = 1'-0"

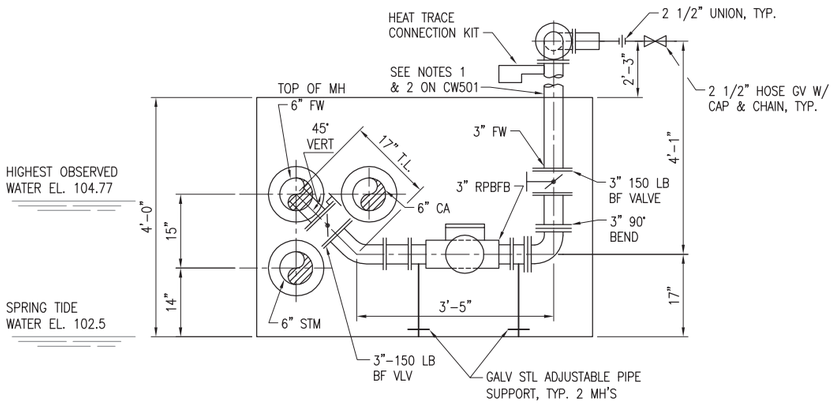

SECTION

SCALE: 3/4"=1'-0" CW501 E

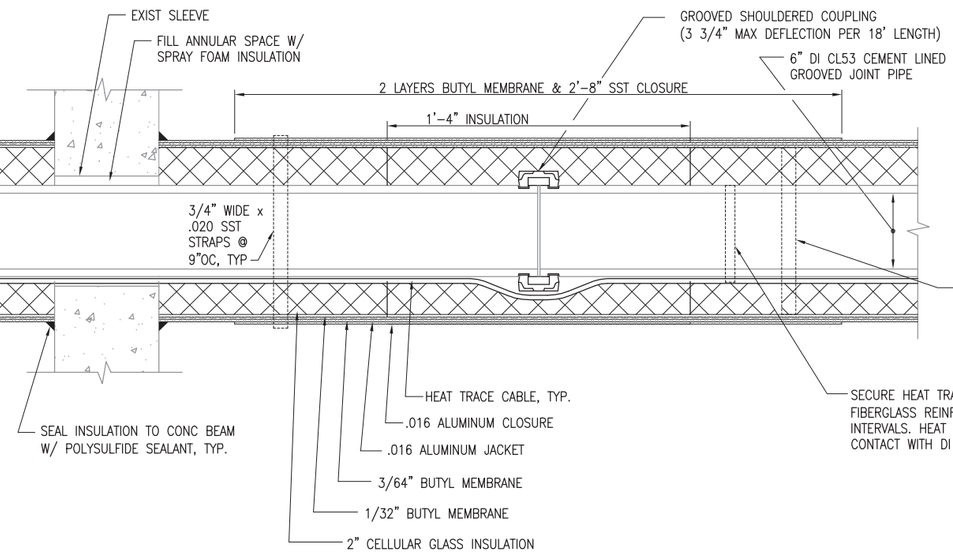

FRESH WATER GROOVED PIPE CONNECTION

SCALE: 1 1/2" = 1'-0"

NOTES:

1. ALL CREVICES BETWEEN ALUMINUM JACKET AND STRAPS, AND BETWEEN OVERLAP IN JACKET SECTIONS SHALL BE PAINTED WITH SILICONE SEALANT.
2. PROVIDE SPACERS AND/OR STRAPS AS NEEDED TO SECURE HEAT TRACE CABLE AGAINST WATER PIPE THROUGH EXISTING SLEEVE.
3. PROVIDE ADDITIONAL HEAT TRACE CABLE AS RECOMMENDED BY CABLE MANUFACTURER ALONG WATER PIPING THROUGH EXISTING SLEEVE.

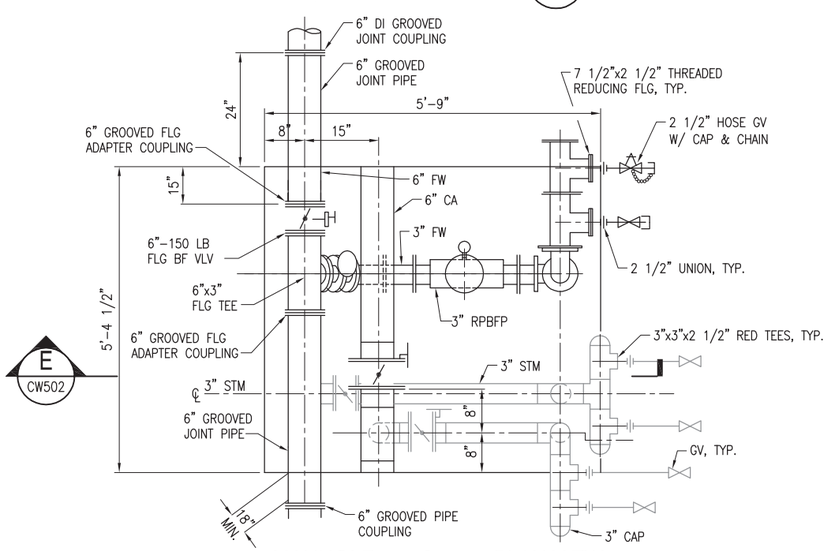

MANHOLE 365 & 369 - PLAN VIEW

SCALE: 3/4"=1'-0"

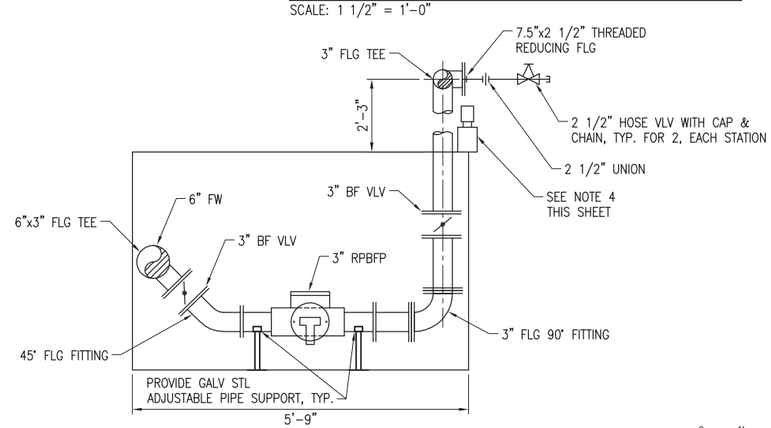

TYPICAL FRESHWATER HOSE STATION SCHEMATIC

SCALE: 3/4" = 1'-0"

NOTES:

1. UTILITY STATIONS TO BE LOCATED TO THE WATER SIDE OF MANHOLE.
2. FOR MANHOLE PIPE SUPPORT, USE GALVANIZED STEEL, ADJUSTABLE TYPE.
3. ALL FW PIPING SHALL BE INSULATED AND HEAT TRACED. DO NOT INSULATE PIPE THROUGH EXISTING SLEEVES, UNLESS EXISTING SLEEVE WILL ACCOMMODATE INSULATION. SEAL INSULATION AT CONCRETE BEAM OR WALL AND SLEEVE.
4. EXISTING TUBULAR STEEL PIPE SUPPORT MOUNTED ON DECK TO BE RE-USE FOR PIPING SUPPORT. APPLY NEW COATING TO EXISTING SUPPORT.
5. ALL PIPE, VALVES & FITTINGS SHALL HAVE 2" PRE-FORMED PIPE INSULATION & HEAT TRACE INSTALLED IN FIELD.
6. ALL FRESH WATER, PIPE, VALVES & FITTINGS IN MH SHALL BE FLANGED.

GRAPHIC SCALE

0 1' 2' 4' SCALE:1/2"=1'-0"
0 1' 2' 3' SCALE:3/4"=1'
0 6" 1' 2' SCALE:1-1/2"=1'

STM	DESCRIPTION	DATE	APPR

NAVFAC

COMMONWEALTH OF MASSACHUSETTS JOHN J. AMATO CIVIL No. 40195 REGISTERED PROFESSIONAL ENGINEER 6-25-13 SEAL

ENGINEERS FST Since 1914
FAY, SPOFFORD & THORNDIKE
5 BURLINGTON WOODS BURLINGTON, MA 01803
A/E INFO

APPROVED
FOR COMMANDER NAVFAC
ACTIVITY
SATISFACTORY TO DATE
DES JJA DRW HBF CHK JJA
PWD-ME DM/POC MIKE McCANN
BRANCH MANAGER
CHIEF ENG/ARCH
FIRE PROTECTION

DEPARTMENT OF THE NAVY
NAVAL FACILITIES ENGINEERING COMMAND
PUBLIC WORKS DEPARTMENT - MAINE
NAVAL FACILITIES ENGINEERING COMMAND ~ MID-ATLANTIC
NAVAL SHIPYARD ~ PORTSMOUTH, NH
PORTSMOUTH NAVAL SHIPYARD KITTERY, MAINE

REPLACE UTILITIES BERTHS 11 AND 12

DETAILS ~ SHEET 2 OF 2

MAXIMO No.: 5918670
EPROJECT NO.: 1171704
CONSTR. CONTR. NO.
NAVFAC DRAWING NO. 12650023
SHEET 23 OF 57
CW502 FP2-13-609

DRAWFORM REVISION: 10 MARCH 2009

FILE NAME: U:\BQ-216K\CADD\Civil\BQ-216K-CW501-02.dwg LAYOUT NAME: CW502 PLOTTED: Monday, July 15, 2013 - 4:32pm USER: Fribar_H

GENERAL NOTES:

1. STRUCTURAL DESIGN COMPLIES WITH THE REQUIREMENTS OF:

   A. 2009 INTERNATIONAL BUILDING CODE.

   B. UFC 1-200-01, GENERAL BUILDING REQUIREMENTS, 16 AUGUST 2010, WITH CHANGE 2, 28 NOVEMBER 2011).

   C. UFC 3-301-01, STRUCTURAL ENGINEERING, 27 JANUARY 2010, WITH CHANGE 3, 31 JANUARY 2012.)

2. ALL DIMENSIONS, ELEVATIONS AND CONDITIONS SHALL BE VERIFIED IN THE FIELD. ANY DISCREPANCIES SHALL BE BROUGHT TO THE ATTENTION OF THE CONTRACTING OFFICER BEFORE ORDERING MATERIALS AND PROCEEDING WITH THE AFFECTED PART OF THE WORK.

3. THE EXACT SIZE & LOCATION OF ALL EXISTING UTILITIES SHALL BE FIELD VERIFIED BY THE CONTRACTOR PRIOR TO START OF CONSTRUCTION. CONTRACTOR SHALL TAKE CARE TO PROTECT UTILITIES IN THE WORK AREA. ALL CONSTRUCTION SHALL BE COORDINATED WITH THE CONTRACTING OFFICE.

4. IT IS THE CONTRACTOR'S SOLE RESPONSIBILITY TO DETERMINE ERECTION PROCEDURES AND SEQUENCE TO ENSURE THE SAFETY OF THE FACILITIES AND THEIR COMPONENTS DURING DEMOLITION AND ERECTION UNLESS OTHERWISE DIRECTED. THIS INCLUDES THE ADDITION OF NECESSARY SHORING, SHEETING, TEMPORARY BRACING, GUYS OR TIE-DOWNS. SUCH MATERIAL SHALL REMAIN THE PROPERTY OF THE CONTRACTOR AFTER THE COMPLETION OF THE PROJECTS.

5. METHODS OF DEMOLITION, CONSTRUCTION, AND ERECTION ARE THE CONTRACTOR'S RESPONSIBILITY UNLESS OTHERWISE SPECIFIED.

6. SPECIAL ATTENTION MUST BE PAID TO ANY/ALL CONCRETE WORK IN/AROUND DRY DOCKS. CONTROLS MUST BE PROVIDED TO ENSURE THAT CONCRETE MATERIAL (I.E., CONCRETE DEBRIS, DUST, CONCRETE SAWING WASTE WATER, WASH WATER, CURING WATER, AND STORM WATER IN CONTACT WITH CURING CONCRETE) DOES NOT ENTER THE CLOSED DRAINAGE SYSTEMS OF ANY SHIPYARD DRY DOCK. ALSO, ELSEWHERE ONSITE, CONCRETE MATERIAL (AS STATED ABOVE) SHOULD BE PREVENTED FROM ENTERING ANY DRAINAGE STRUCTURE OR PATH TO THE RIVER.)

7. THE CONTRACTOR SHALL NOT DEVIATE FROM THE DESIGN DRAWINGS WITHOUT WRITTEN APPROVAL OF THE CONTRACTING OFFICER.

8. SHOP DRAWINGS SHALL BE CHECKED BY THE CONTRACTOR PRIOR TO SUBMISSION FOR CONTRACTING OFFICER'S APPROVAL.

9. THE PROJECT SITE IS AN OPERATING NAVY FACILITY. THE CONTRACTOR SHALL COORDINATE WORK TO PERMIT NAVY OPERATIONS TO BE PERFORMED DURING THE COURSE OF WORK. DELAY CLAIMS DUE TO PERIODIC WORK STOPPAGES OR CHANGES IN WORK SEQUENCE BASED ON IMPACTS FROM SHIPYARD OPERATIONS WILL NOT BE ALLOWED. THE CONTRACTOR MAY NEED TO WORK WEEKENDS TO ENSURE SHIPYARD OPERATIONS ARE NOT IMPACTED.

10. ANY PAVEMENT AND PAVEMENT MARKINGS REMOVED OR DISTURBED BY THE CONSTRUCTION SHALL BE REPLACED IN-KIND.

11. UPON COMPLETION OF PROJECT WORK, CONTRACTOR SHALL CLEAN WORK AREA FREE OF EQUIPMENT, TOOLS, MATERIALS, DEBRIS AND DUST.

12. DESIGN CRITERIA:

    D. MANHOLE FRAMES AND COVERS SHALL SUPPORT H20 VEHICLE LOADING PLUS A 30% INCREASE FOR IMPACT LOADS.

    E. EXISTING FRP UTILITY CATWALK DESIGN LOADS:
       UNIFORM LIVE LOAD _____100PSF
       CONCENTRATED LIVE LOAD _____300LB

14. EXERCISE CAUTION WHEN PERFORMING WORK ON/IN MANHOLES AS THEY ARE ADJACENT TO ACTIVE CRANE RAILS. DO NOT PLACE ITEMS WITHIN 42" FROM CENTERLINE OF CRANE RAILS.

15. EXERCISE EXTREME CAUTION; 4500 PSI HIGH PRESSURE AIR IN THE AREA.

16. MANHOLE COVER PLATES SHALL BE PAINTED "KEEP OFF" IN YELLOW PAINT. LETTERS TO BE 6 INCHES MINIMUM HEIGHT.

17. CATWALK GRATING AND IT'S SUPPORTS ARE EXTENSIVELY COVERED WITH SEA WEED AND OTHER MARINE DEBRIS. CONTRACTOR SHALL REMOVE ANY DEBRIS THAT INTERFERES WITH REPAIRS.

DEMOLITION:

1. ALL DETERIORATED CONCRETE REPAIR WORK ON PIER MANHOLES SHALL BE LOCALIZED. NO FULL DEPTH DEMOLITION SHALL TAKE PLACE.

2. THE CONTRACTOR SHALL PROVIDE CONTROL MEASURES AS REQUIRED BY ENVIRONMENTAL REGULATIONS AND AS REQUIRED TO PREVENT DEBRIS CONTAMINANTS (SOLID, LIQUID OR DISSOLVED) FROM ENTERING THE RIVER. SEE NOTE 6, GENERAL NOTES.

3. ALL MATERIAL DEMOLISHED AND NOT REUSED OR SALVAGED TO THE GOVERNMENT SHALL BECOME THE PROPERTY OF THE CONTRACTOR AND SHALL BE REMOVED DAILY FROM THE GOVERNMENTS PROPERTY. REMOVED MATERIAL SHALL BE DISPOSED OF IN ACCORDANCE WITH ALL LOCAL, STATE AND FEDERAL LAWS.

4. THE CONTRACTOR IS RESPONSIBLE FOR REMOVAL OF ALL DEBRIS RESULTING FROM DEMOLITION OF THE MANHOLES.

CONCRETE NOTES:

1. ALL CONCRETE CONSTRUCTION SHALL BE IN CONFORMANCE WITH AMERICAN CONCRETE INSTITUTE BUILDING CODE, ACI 318, LATEST EDITION.

2. ALL CONCRETE SHALL BE NORMAL WEIGHT HAVING A MINIMUM COMPRESSIVE STRENGTH AT 28 DAYS OF4000 PSI UNLESS NOTED OTHERWISE.

   A. PORTLAND CEMENT SHALL CONFORM TO ASTM C 150 TYPE II.
   B. AGGREGATE SHALL CONFORM TO ASTM C33, 3/4" MAXIMUM SIZE.
   C. WATER SHALL CONFORM TO ASTM C 94 AND SHALL BE POTABLE.
   D. MAXIMUM WATER CEMENT RATIO SHALL BE 0.45.
   E. MAXIMUM SLUMP SHALL BE 4".
   F. AIR ENTRAINING AGENT SHALL CONFORM TO ASTM C 260 WITH 4-6% TOTAL AIR.

3. REINFORCING STEEL SHALL BE ASTM A615 GRADE 60. ALL DETAILS SHALL BE IN ACCORDANCE WITH ACI DETAIL STANDARD ACI 315.

4. WELDED WIRE FABRIC SHALL CONFORM TO ASTM A185 SPECIFICATIONS AND PLACED IN ACCORDANCE WITH THE WELDED STEEL WIRE INSTITUTE.

5. REINFORCING STEEL SHALL HAVE A MINIMUM CLEAR CONCRETE COVER OF 3" PER COVER REQUIREMENTS FOR PERMANENT INSTALLATIONS IN SALT WATER. REF: UFC 4-151-140, 10 SEPT. 2001, WITH CHANGE 1, 1 SEPT. 2012.

6. ALL EXPOSED CONCRETE EDGES SHALL HAVE 3/4" CHAMFER.

7. ALL LAP SPLICES FOR CONTINUOUS REINFORCING, NOT SHOWN ON DRAWINGS, SHALL BE IN ACCORDANCE WITH ACI 318.

8. FOR PENETRATIONS GREATER THAN 10" THROUGH CONCRETE WALLS AND SLABS, PROVIDE ADDITIONAL DIAGONAL REINFORCING BARS AROUND THE OPENING AT EACH FACE EQUAL IN SIZE TO THE MAIN REINFORCING. DIAGONAL BARS SHALL OVERLAP A MINIMUM OF 1'-6".

9. HOT WEATHER CONCRETE INSTALLATION SHALL BE PERFORMED IN ACCORDANCE WITH ACI 305. COLD WEATHER CONCRETE INSTALLATION SHALL BE PERFORMED IN ACCORDANCE WITH ACI 306.

10. CURING:

    A. HORIZONTAL SURFACES SHALL BE KEPT CONTINUOUSLY MOIST FOR A MINIMUM OF SEVEN DAYS.

    B. VERTICAL SURFACES SHALL RECEIVE TWO COATS (ONE AT TIME OF STRIPPING AND ANOTHER THREE DAYS LATER) OF AN APPROVED NON-TOXIC CURING COMPOUND. FORMS SHALL REMAIN IN-PLACE THROUGH INITIAL CURE.

11. SURFACE PATCHING MATERIAL SHALL BE ONE-COMPONENT CEMENTITIOUS, EARLY STRENGTH, SHRINKAGE COMPENSATED HAND TROWEL APPLIED MORTAR.

12. PRIOR TO CONCRETE PATCHING AND REPAIR, CLEAN AND COAT ALL EXPOSED EXISTING REINFORCING STEEL WITH A PROTECTIVE COATING/BONDING AGENT. REINFORCEMENT EXHIBITING SECTION LOSS OF 20% OR GREATER DUE TO CORROSION SHALL BE REPLACED OR SUPPLEMENTED WITH NEW SECTION OF REBAR MATCHING THE EXISTING BAR SIZE. PROVIDE 12" MINIMUM SPLICE LENGTH.

STEEL NOTES:

1. STEEL DESIGN AND CONSTRUCTION SHALL BE IN ACCORDANCE WITH "STEEL CONSTRUCTION MANUAL" AMERICAN INSTITUTE OF STEEL CONSTRUCTION (AISC) - 13th EDITION.

2. STRUCTURAL STEEL W-SHAPES SHALL CONFORM TO ASTM A992, MINIMUM YIELD STRENGTH fy=50 KSI.

3. HOLLOW STRUCTURAL SECTIONS SHALL CONFORM TO ASTM A500, GRADE B, MINIMUM YIELD STRENGTH fy=46 KSI.

4. STRUCTURAL STEEL MISCELLANEOUS SECTIONS, INCLUDING BUT NOT LIMITED TO CHANNELS, ANGLES AND PLATES SHALL CONFORM TO ASTM A36, MINIMUM YIELD STRENGTH fy=36 KSI.

5. WELDING SHALL CONFORM TO THE AMERICAN WELDING SOCIETY (AWS) STRUCTURAL WELDING CODE, D1.1, LATEST EDITION. ELECTRODE: E70.

6. CONNECTIONS SHALL BE AS NOTED ON CONTRACT DRAWINGS.

7. NO FIELD CUTTING, BURNING, OR OTHER ALTERATION OF NEW STRUCTURAL STEEL SHALL BE DONE WITHOUT WRITTEN APPROVAL OF THE ENGINEER.

STEEL COATING NOTES

1. ALL NEW SHALL BE HOT-DIP GALVANIZED PER ASTM A123 AFTER FABRICATION.

2. ALL EXISTING GALVANIZED STEEL SEWER SUPPORT BRACKETS AS WELL AS ADDITIONAL ITEMS INDICATED ON SHEETS S-501 TO S-504 SHALL BE CLEANED AND COATED PER ASTM A780. SURFACE PREPARATION SHALL BE A MINIMUM OF SSPC-SP3. COAT USING ONE OF THE FOLLOWING:

   A. DIMETCOTE 9 - AMERON INTERNATIONAL
   B. CARBO ZINC 11 - CARBOLINE COMPANY
   C. CATHA-COAT 304 VICI-DEVOE
   D. APPROVED EQUAL

   FOR BIDDING PURPOSES, APPROXIMATE AREA OF CLEANING AND COATING OF EXISTING GALVANIZED STEEL IS 1500 SQUARE FEET AS SHOWN ON THE DRAWINGS AND WHERE DIRECTED BY THE CONTRACTING OFFICER.

3. NINE EXISTING EPOXY COATED STEEL UTILITY STATION SUPPORTS LOCATED ADJACENT TO EACH MANHOLE SHALL BE HAND CLEANED TO SSPC-SP2, PRIMED AND COATED WITH AN EPOXY POLYAMIDE 3 COAT SYSTEM MEETING THE REQUIREMENTS OF SSPC-PS 13.01.

4. SEE DRAWING S-502 FOR UTILITY STATION.

ABBREVIATIONS:

@	AT
APPROX	APPROXIMATELY
BLDG	BUILDING
BM	BEAM
BOT	BOTTOM
CA	COMPRESSED AIR
CJ	CONSTRUCTION JOINT
CONC	CONCRETE
CONT	CONTINUOUS
DIA	DIAMETER
DIMS	DIMENSIONS
DP	DEEP
DWG	DRAWING
DWGS	DRAWINGS
EA	EACH
EF	EACH FACE
EJ	EXPANSION JOINT
EL	ELEVATION
EMBED	EMBEDMENT
EQ	EQUAL
EW	EACH WAY
EXT	EXTERIOR
FFL	FINISHED FLOOR ELEVATION
FIN	FINISHED
FRP	FIBER REINFORCED POLYMER
GALV	GALVANIZED
HOR	HORIZONTAL
HSS	HOLLOW STRUCTURAL SECTION
ID	INSIDE DIAMETER
INT	INTERIOR
JT	JOINT
LOC	LOCATION
MANUF	MANUFACTURER
MAX	MAXIMUM
MIN	MINIMUM
N/A	NOT APPLICABLE
NO, #	NUMBER
OC	ON CENTER
OD	OUTSIDE DIAMETER
OPNG	OPENING
PL	PLATE
REINF	REINFORCEMENT
REQ'D	REQUIRED
SCHED	SCHEDULE
SECT	SECTION
SQ	SQUARE
SS	STAINLESS STEEL
T&B	TOP AND BOTTOM
THK	THICK
T.O.	TOP OF
TYP	TYPICAL
U.N.O.	UNLESS NOTED OTHERWISE
VERT	VERTICAL
VIF	VERIFY IN FIELD
W/	WITH

SYM	DESCRIPTION	DATE	APPR

NAVFAC

COMMONWEALTH OF MASSACHUSETTS VICTOR M. GOVONI CIVIL No. 41733 REGISTERED PROFESSIONAL ENGINEER
SEAL

ENGINEERS FST Since 1914
FAY, SPOFFORD & THORNDIKE
5 BURLINGTON WOODS BURLINGTON, MA 01803
A/E INFO

APPROVED
FOR COMMANDER NAVFAC
ACTIVITY
SATISFACTORY TO DATE
DES RGN | DRW RGN | CHK VMG
PWD-ME DM/POC MIKE McCANN
BRANCH MANAGER
CHIEF ENG/ARCH
FIRE PROTECTION

DEPARTMENT OF THE NAVY
NAVAL FACILITIES ENGINEERING COMMAND
PUBLIC WORKS DEPARTMENT - MAINE
NAVAL FACILITIES ENGINEERING COMMAND - MID-ATLANTIC
NAVAL SHIPYARD - PORTSMOUTH, NH
PORTSMOUTH NAVAL SHIPYARD
KITTERY, MAINE

REPLACE UTLITIES
BERTHS 11 AND 12

GENERAL NOTES, LEGEND AND ABBREVIATIONS

MAXIMO No.: 5918670
EPROJECT NO.: 1171704
CONSTR. CONTR. NO.
NAVFAC DRAWING NO. 12650024
SHEET 24 OF 57
S-001 | FP2-13-610

DRAWFORM REVISION: 10 MARCH 2009

FILE NAME: U:\BQ-216K\CADD\Structural\BQ-216K-S-001.dwg LAYOUT NAME: S-001 PLOTTED: Tuesday, June 25, 2013 - 10:38am USER: Friber_H

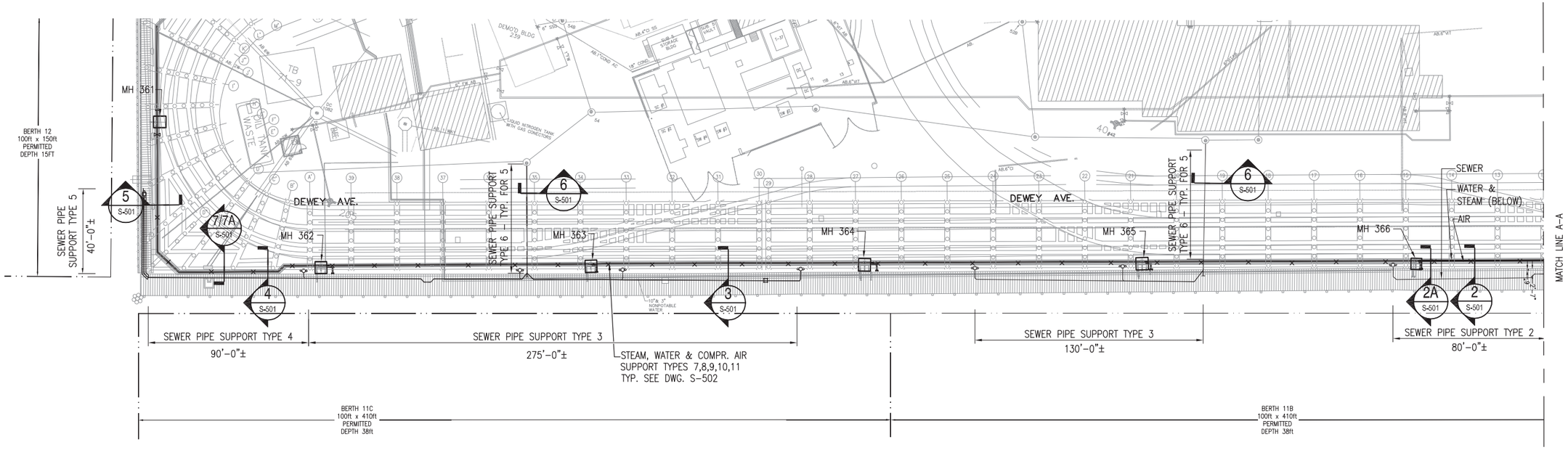

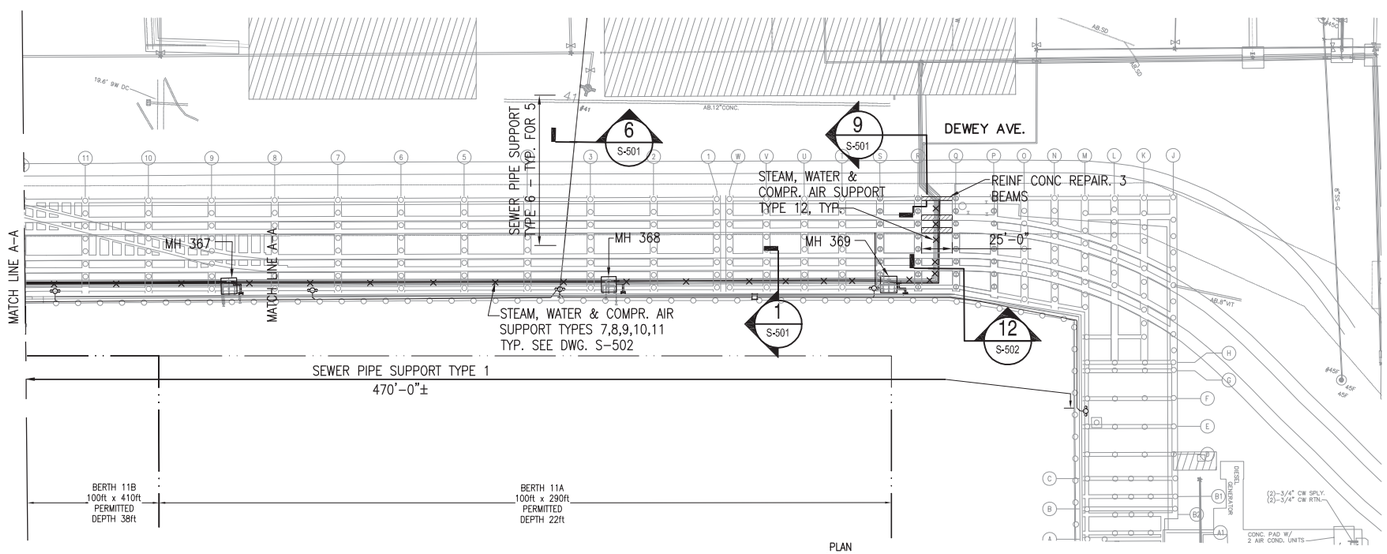

UTILITY STRUCTURES REPAIR AND PIPE SUPPORTS PLAN

SCALE: 1:30

NOTES:

1. SEWER PIPE SUPPORTS:

   WITH THE EXCEPTION OF PIPE SUPPORT TYPE 2A & 6 SEWER PIPE SUPPORT TYPES 1, 2, 3, 4, 5 SHALL REMAIN. REPLACE PIPE U–BOLTS. CLEAN AND COAT DETERIORATED STEEL PER STRUCTURAL NOTES, DRAWING S–001.

2. AIR, WATER & STEAM PIPE SUPPORT TYPES 7, 8, 9, 10, 11, 12 TO BE NEW.

3. SEWER PIPE SUPPORT QUANTITIES AND SPACING:

   - TYPE 1 SUPPORT SPACING= 10'–0" ±, TYP.
   - TYPE 2 TO TYPE 5 SUPPORT SPACING= 8'–6" ±, TYP.
   - TYPE 6, 15 SUPPORTS.

4. AIR, WATER & STEAM SUPPORT QUANTITIES: REFER TO COMPRESSED AIR, STEAM AND COLD WATER DRAWINGS FOR SUPPORT SPACING REQUIREMENTS.

   - TYPE 7, 56 SUPPORTS
   - TYPE 8, 58 SUPPORTS
   - TYPE 9, 58 SUPPORTS
   - TYPE 10, 18 SUPPORTS
   - TYPE 11, 16 SUPPORTS
   - TYPE 12, 5 SUPPORTS.
   - TYPE 13, 16 SUPPORTS
   - TYPE 14, 24 SUPPORTS
   - TYPE 15, 16 SUPPORTS

4. SEE DRAWING S–501, S–502 FOR PIPE SUPPORT DETAILS AND REINFORCED CONCRETE REPAIR DETAILS.

5. SEE DRAWING S–503 FOR MANHOLE REPAIR DETAILS.

6. SEE MECH. AND CIVIL DRAWINGS FOR PIPE SUPPORT DETAILS.

KEY PLAN

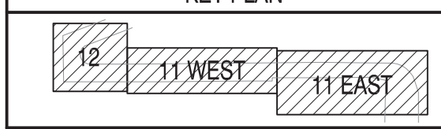

GRAPHIC SCALE

0 30' 60'

SCALE:1"= 30'

SYM	DESCRIPTION	DATE	APPR

NAVFAC

COMMONWEALTH OF MASSACHUSETTS
VICTOR M. GOVONI
CIVIL
No. 41733
REGISTERED PROFESSIONAL ENGINEER
SEAL

ENGINEERS
FST
Since 1914
FAY, SPOFFORD & THORNDIKE
5 BURLINGTON WOODS
BURLINGTON, MA 01803
A/E INFO

APPROVED
FOR COMMANDER NAVFAC
ACTIVITY
SATISFACTORY TO DATE
DES RGN DRW RGN CHK VMG
PWD–ME DM/POC MIKE McCANN
BRANCH MANAGER
CHIEF ENG/ARCH
FIRE PROTECTION

DEPARTMENT OF THE NAVY
NAVAL FACILITIES ENGINEERING COMMAND
PUBLIC WORKS DEPARTMENT – MAINE
NAVAL FACILITIES ENGINEERING COMMAND ~ MID-ATLANTIC
NAVAL SHIPYARD – PORTSMOUTH, NH
PORTSMOUTH NAVAL SHIPYARD
KITTERY, MAINE
REPLACE UTILITIES
BERTHS 11 AND 12
UTILITY STRUCTURES REPAIR AND PIPE SUPPORTS PLAN

MAXIMO No.: 5918670
EPROJECT NO.: 1171704
CONSTR. CONTR. NO.
NAVFAC DRAWING NO. 12650025
SHEET 25 OF 57
S-101 FP2-13-611

DRAWFORM REVISION: 10 MARCH 2009

FILE NAME: U:\BO-216K\CADD\Structural\BO-216K-S-101.dwg LAYOUT NAME: S-101 PLOTTED: Tuesday, June 25, 2013 – 10:39am USER: Fribar_H

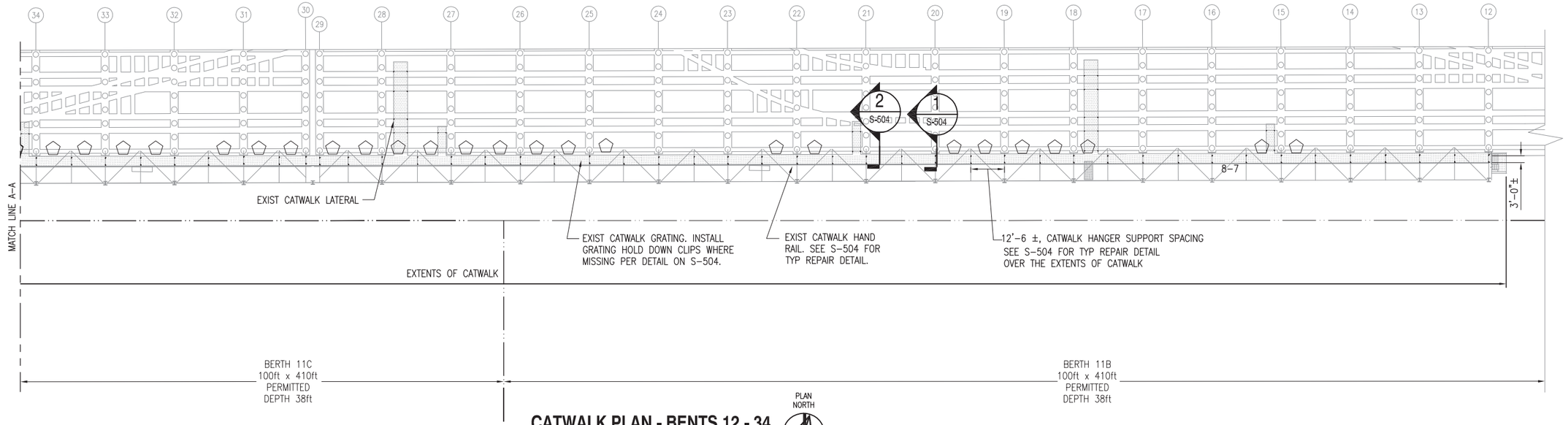

CATWALK PLAN - BENTS 12 - 34

SCALE: 1"=30'–0"

PLAN NORTH

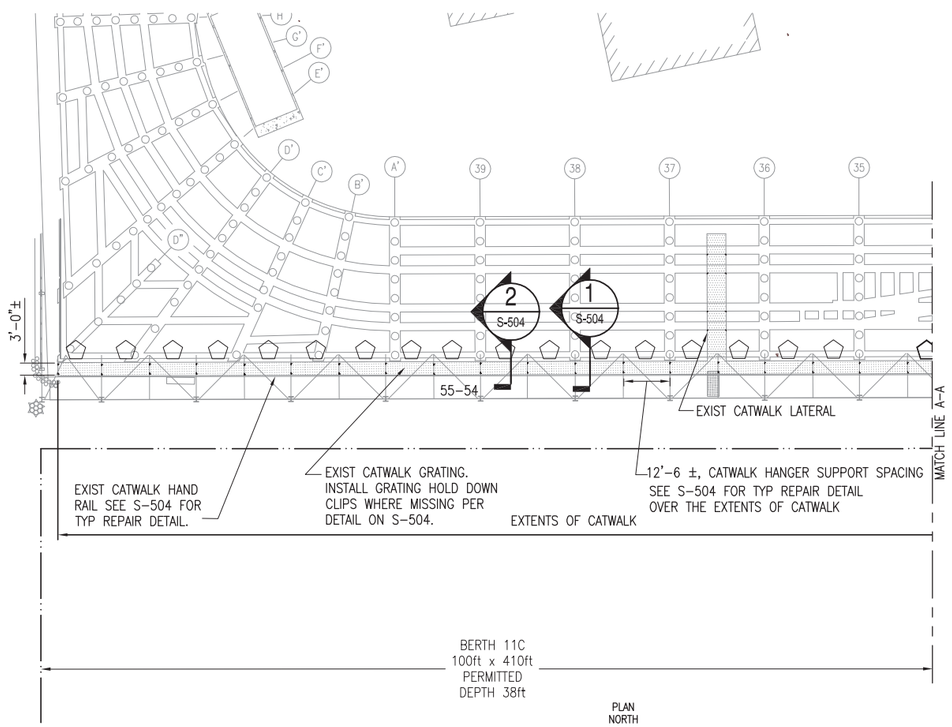

CATWALK PLAN - BENTS 35 - D'

SCALE: 1"=30'–0"

PLAN NORTH

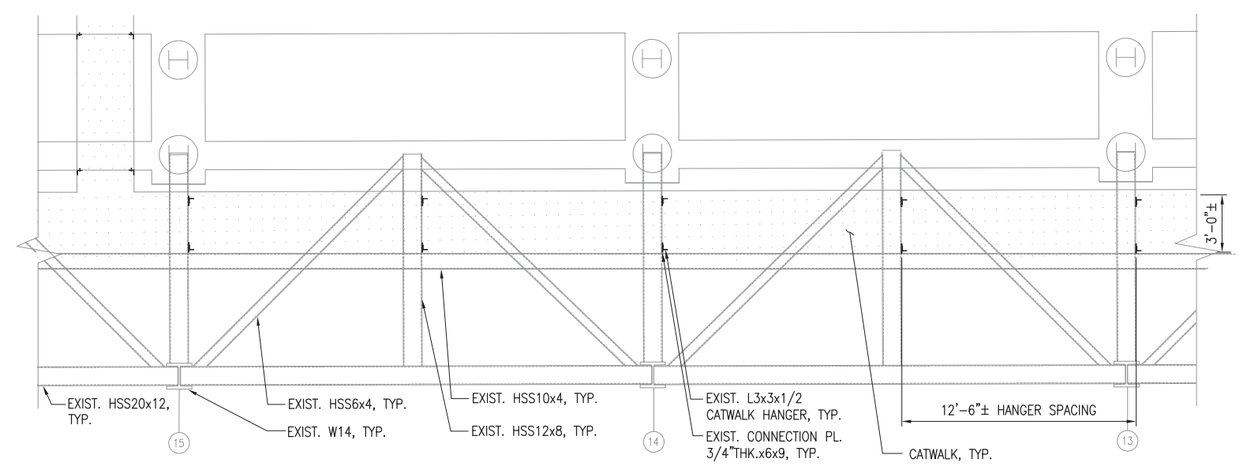

TYPICAL CATWALK SUPPORT DETAILS PART PLAN

SCALE: 1"=4'–0"

PLAN NORTH

KEY PLAN

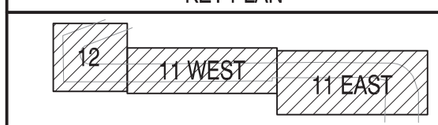

GRAPHIC SCALE

0 10' 20' 40'

SCALE:1"=20'

LEGEND :

(2) – LOCATION OF CATWALK RAIL REPAIR. SEE S–504 FOR REPAIR DETAIL.

APPR	
DATE	
DESCRIPTION	
SYM	

NAVFAC

COMMONWEALTH OF MASSACHUSETTS VICTOR M. GOVONI CIVIL No. 41733 REGISTERED PROFESSIONAL ENGINEER

SEAL

ENGINEERS FST Since 1914

FAY, SPOFFORD & THORNDIKE
5 BURLINGTON WOODS
BURLINGTON, MA 01803

A/E INFO

APPROVED

FOR COMMANDER NAVFAC

ACTIVITY

SATISFACTORY TO DATE

DES	FGN	DRW	RGN	CHK	VMG

PWD–ME DM/POC MIKE McCANN

BRANCH MANAGER

CHIEF ENG/ARCH

FIRE PROTECTION

DEPARTMENT OF THE NAVY
NAVAL FACILITIES ENGINEERING COMMAND
PUBLIC WORKS DEPARTMENT – MAINE
NAVAL FACILITIES ENGINEERING COMMAND ~ MID-ATLANTIC
NAVAL SHIPYARD – PORTSMOUTH, NH
PORTSMOUTH NAVAL SHIPYARD
KITTERY, MAINE

REPLACE UTILITIES
BERTHS 11 AND 12

CATWALK PLAN

MAXIMO No.: 5918670

EPROJECT NO.: 1171704

CONSTR. CONTR. NO.

NAVFAC DRAWING NO.
12650026

SHEET 26 OF 57

S-102 | FP2-13-612

DRAWFORM REVISION: 10 MARCH 2009

FILE NAME: U:\BQ-216K\CADD\Structural\BQ-216K-S-102.dwg LAYOUT NAME: S-102 PLOTTED: Tuesday, June 25, 2013 - 10:39am USER: Friber_H

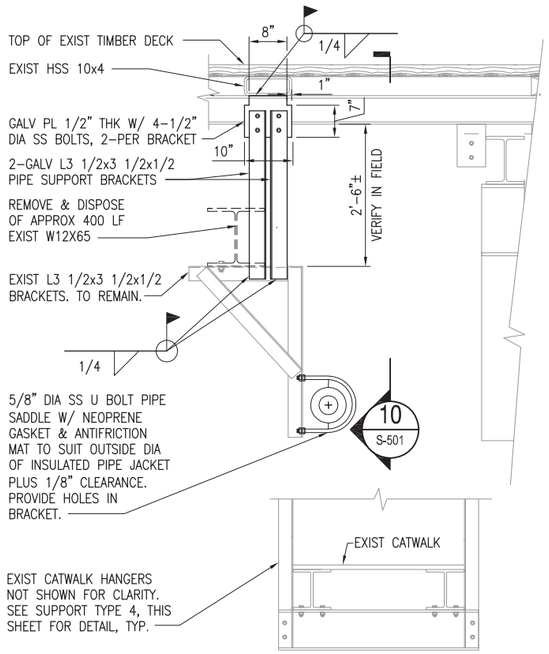

SEWER PIPE SUPPORT TYPE 3

SCALE: 3/4"=1'-0" S-101 (3)

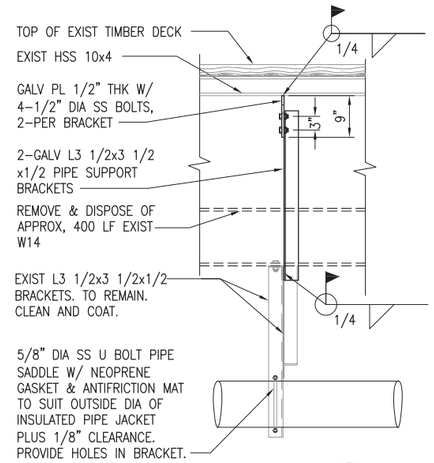

SECTION

SCALE: 3/4"=1'-0" S-501 (10)

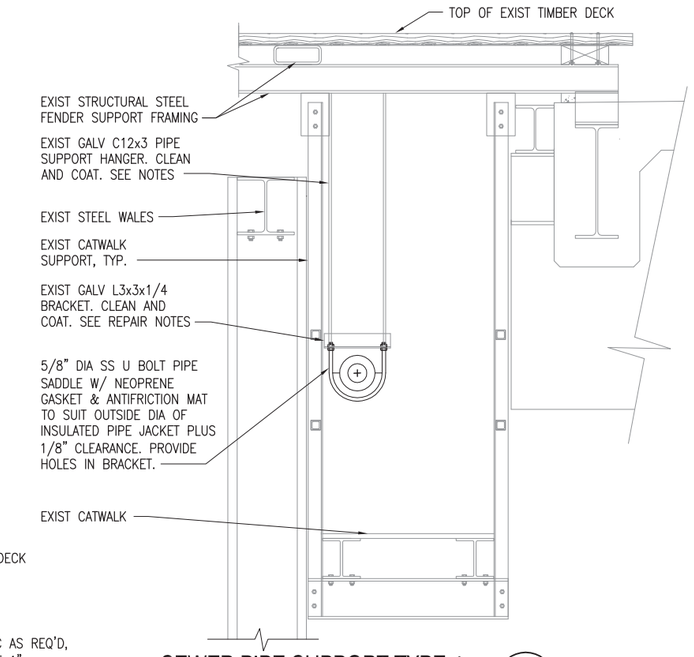

SEWER PIPE SUPPORT TYPE 4

SCALE: 3/4"=1'-0" S-101 (4)

NOTES:

1. REFER TO STRUCTURAL NOTES, DRAWING S-001 FOR STEEL SURFACE PREPARATION AND COATING REQUIREMENTS.
2. REFER TO CIVIL AND MECHANICAL DRAWINGS FOR PIPE SIZES.

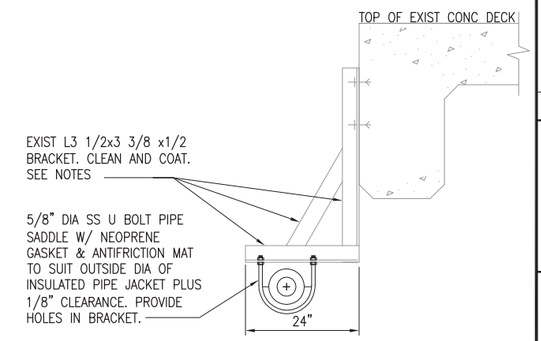

SEWER PIPE SUPPORT TYPE 1

SCALE: 3/4"=1'-0" S-101 (1)

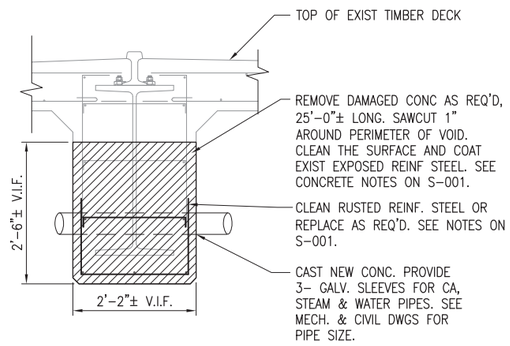

REINFORCED CONCRETE REPAIR

SCALE: 3/4"=1'-0" S-101 (9)

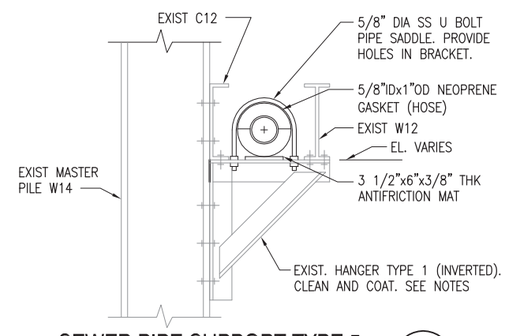

SEWER PIPE SUPPORT TYPE 5

SCALE: 3/4"=1'-0" S-101 (5)

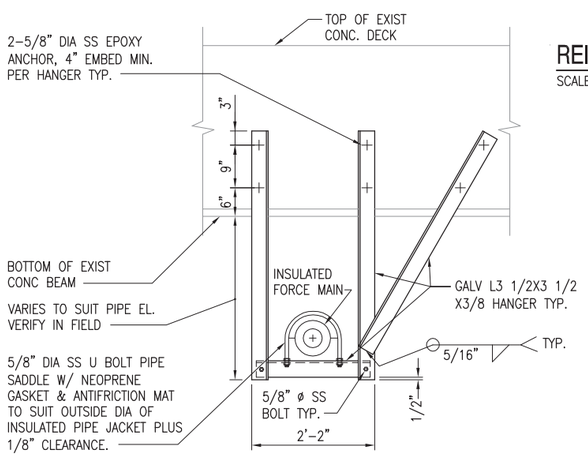

SEWER PIPE SUPPORT TYPE 6

SCALE: 3/4"=1'-0" S-101 (6)

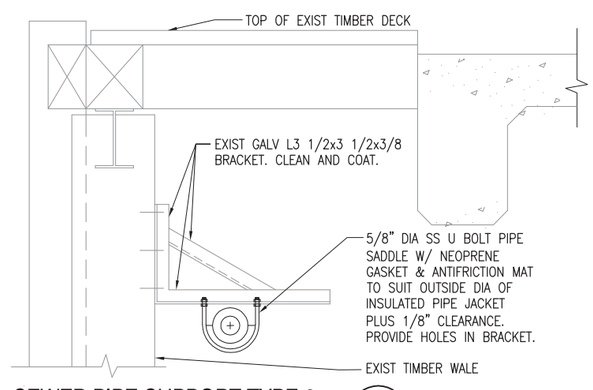

SEWER PIPE SUPPORT TYPE 2

SCALE: 3/4"=1'-0" S-101 (2)

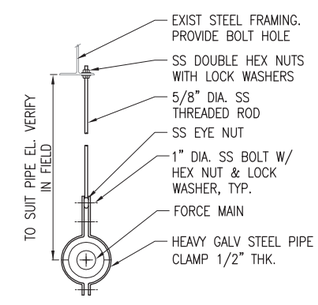

1-SEWER PIPE SUPPORT TYPE 2A

SCALE: 3/4"=1'-0" S-101 (2A)

GRAPHIC SCALE

0 1' 2' 3'

SCALE:3/4"=1'

SYM	DESCRIPTION	DATE	APPR

NAVFAC

COMMONWEALTH OF MASSACHUSETTS VICTOR M. GOVONI CIVIL No. 41733 REGISTERED PROFESSIONAL ENGINEER — SEAL

ENGINEERS FST Since 1914
FAY, SPOFFORD & THORNDIKE
5 BURLINGTON WOODS BURLINGTON, MA 01803
A/E INFO

APPROVED
FOR COMMANDER NAVFAC
ACTIVITY
SATISFACTORY TO DATE
DES RGN DRW RGN CHK VMG
PWD-ME DM/POC MIKE McCANN
BRANCH MANAGER
CHIEF ENG/ARCH
FIRE PROTECTION

DEPARTMENT OF THE NAVY
NAVAL FACILITIES ENGINEERING COMMAND ~ MID-ATLANTIC
PUBLIC WORKS DEPARTMENT - MAINE
NAVAL FACILITIES ENGINEERING COMMAND
NAVAL SHIPYARD - PORTSMOUTH, NH
PORTSMOUTH NAVAL SHIPYARD
KITTERY, MAINE

REPLACE UTLITIES
BERTHS 11 AND 12

DETAILS - SHEET 1 OF 4

MAXIMO No.: 5918670
EPROJECT No.: 1171704
CONSTR. CONTR. NO.
NAVFAC DRAWING NO. 12650027
SHEET 27 OF 57
S-501 FP2-13-613

DRAWFORM REVISION: 10 MARCH 2009

FILE NAME: U:\BO-216K\CADD\Structural\BO-216K-S-501.dwg LAYOUT NAME: S-501 PLOTTED: Tuesday, June 25, 2013 - 10:41am USER: Friber_H

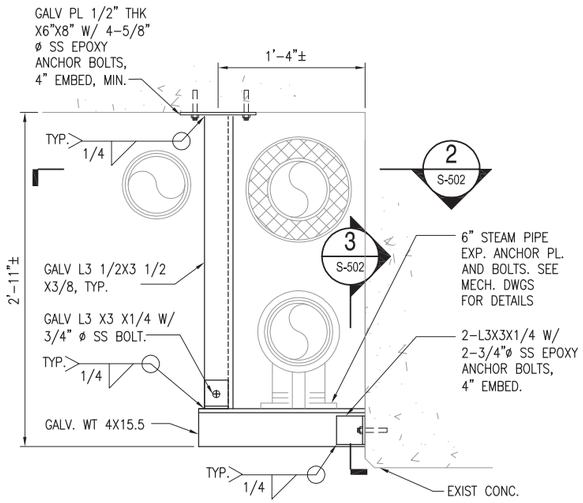

PIPE SUPPORT TYPE 7

SCALE: 1 1/2"=1'-0"

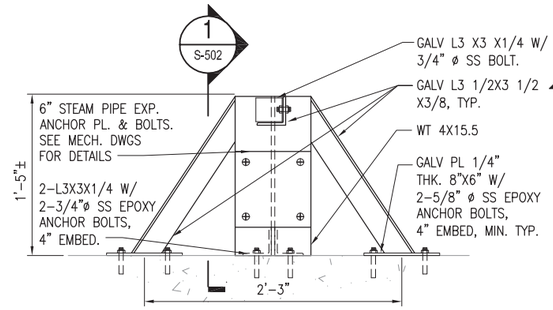

SECTION

SCALE: 1 1/2"=1'-0" S-502 (2)

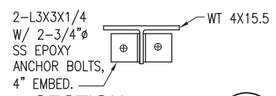

SECTION

SCALE: 1 1/2"=1'-0" S-502 (3)

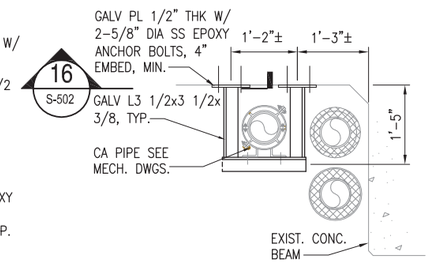

PIPE SUPPORT TYPE 10

SCALE: 3/4"=1'-0"

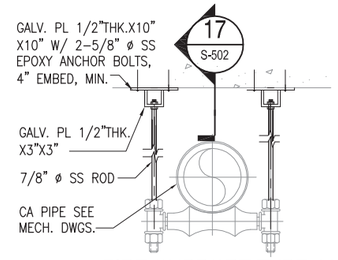

PIPE SUPPORT TYPE 11

SCALE: 3/4"=1'-0"

NOTES:

1. 9 TOTAL UTILITY STATIONS AND MANHOLES
2. SEE MECHANICAL AND CIVIL DRAWINGS FOR LOCATION AND QUANTITY OF EXPANSION JOINT ANCHORS AND ON-DECK PIPE ANCHORS/GUIDES.

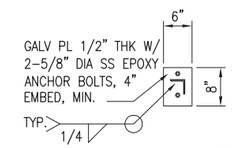

SECTION

SCALE: 3/4"=1'-0" S-502 (16)

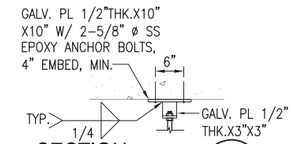

SECTION

SCALE: 3/4"=1'-0" S-502 (17)

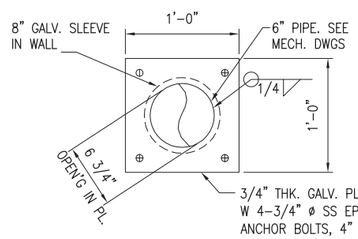

PIPE SUPPORT TYPE 15 MANHOLE WALL, TYPICAL

SCALE: 1 1/2"=1'-0"

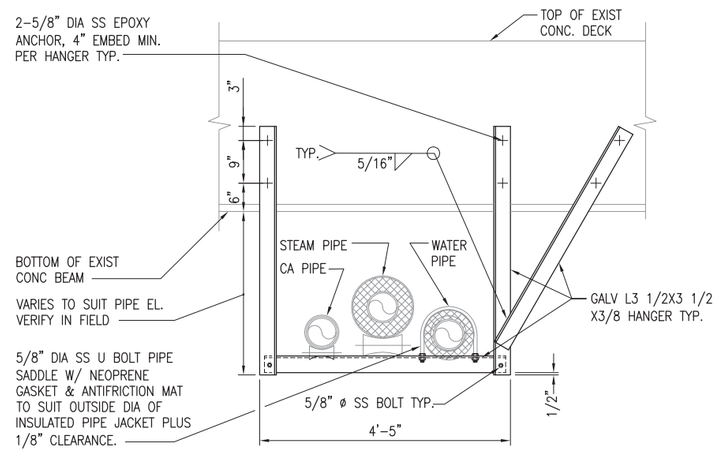

AIR, STEAM & WATER PIPE SUPPORT TYPE 12

SCALE: 3/4"=1'-0" S-101 (12)

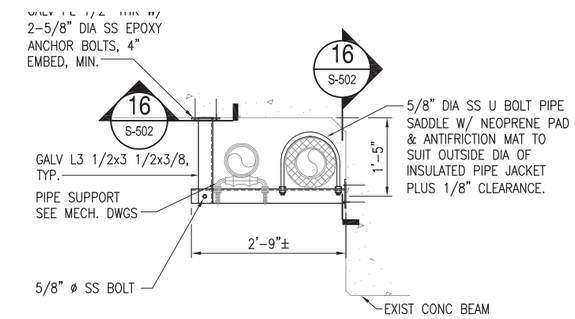

PIPE SUPPORT TYPE 9

SCALE: 3/4"=1'-0"

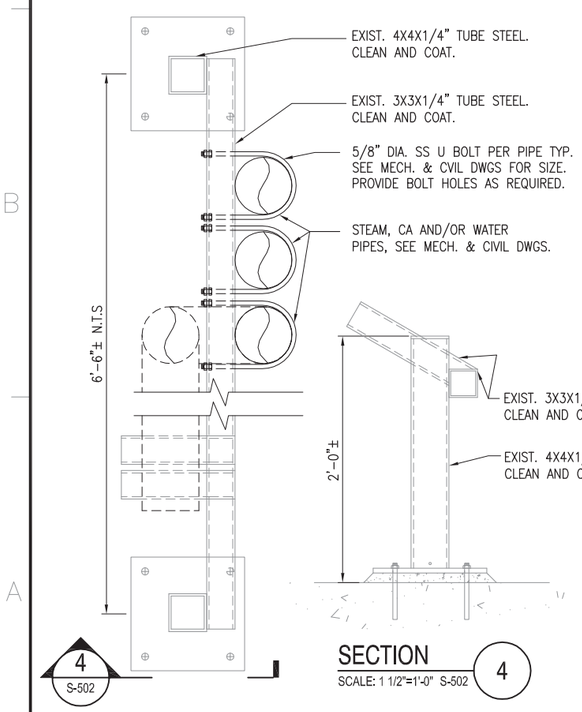

SECTION

SCALE: 1 1/2"=1'-0" S-502 (4)

EXISTING UTILITY STATION SUPPORT REPAIR PLAN

SCALE: 1 1/2"=1'-0"

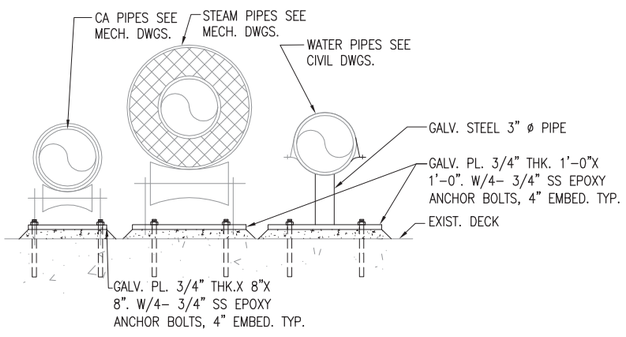

PIPE ANCHOR/GUIDE SUPPORT TYPE 13 ON BERTH 12, TYPICAL

SCALE: 1 1/2"=1'-0"

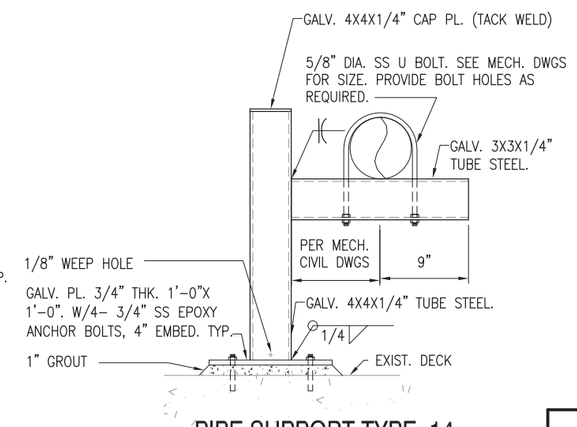

PIPE SUPPORT TYPE 14 MANHOLE FLOOR, TYPICAL

SCALE: 1 1/2"=1'-0"

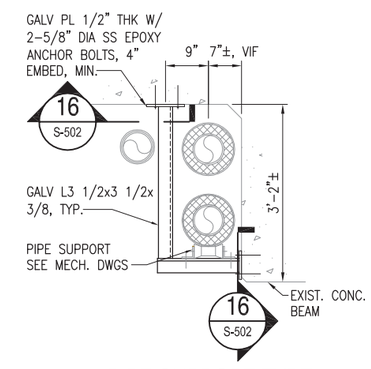

PIPE SUPPORT TYPE 8

SCALE: 3/4"=1'-0"

GRAPHIC SCALE

0 1' 2' 3' — SCALE:3/4"=1'

0 6" 1' 2' — SCALE:1-1/2"=1'

SYM	DESCRIPTION	DATE	APPR

NAVFAC

COMMONWEALTH OF MASSACHUSETTS — VICTOR M. GOVONI, CIVIL, No. 41733, REGISTERED PROFESSIONAL ENGINEER — SEAL

ENGINEERS FST Since 1914
FAY, SPOFFORD & THORNDIKE
5 BURLINGTON WOODS
BURLINGTON, MA 01803
A/E INFO

APPROVED
FOR COMMANDER NAVFAC
ACTIVITY
SATISFACTORY TO DATE
DES RGN | DRW RGN | CHK VMG
PWD-ME DM/POC MIKE McCANN
BRANCH MANAGER
CHIEF ENG/ARCH
FIRE PROTECTION

DEPARTMENT OF THE NAVY
NAVAL FACILITIES ENGINEERING COMMAND
PUBLIC WORKS DEPARTMENT – MAINE
NAVAL FACILITIES ENGINEERING COMMAND ~ MID-ATLANTIC
NAVAL SHIPYARD – PORTSMOUTH, NH
PORTSMOUTH NAVAL SHIPYARD
KITTERY, MAINE

REPLACE UTILITIES BERTHS 11 AND 12

DETAILS – SHEET 2 OF 4

MAXIMO No.: 5918670
EPROJECT NO.: 1171704
CONSTR. CONTR. NO.
NAVFAC DRAWING NO. 12650028
SHEET 28 OF 57
S-502 | FP2-13-614

DRAWFORM REVISION: 10 MARCH 2009

FILE NAME: U:\BG-216K\CADD\Structural\BG-216K-S-502.dwg LAYOUT NAME: S-502 PLOTTED: Tuesday, June 25, 2013 - 10:41am USER: Fiber_JH

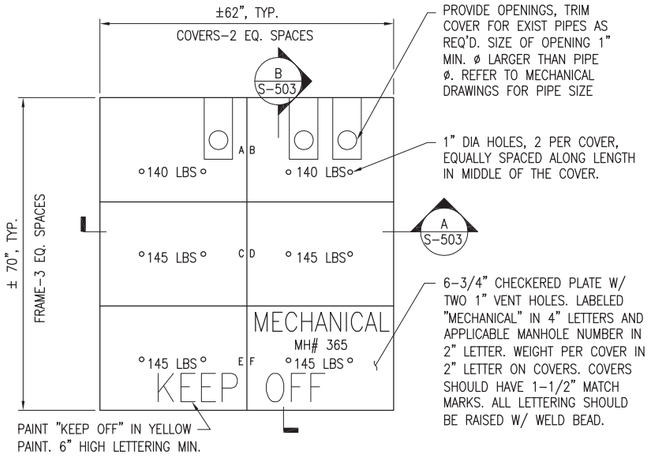

MANHOLE 362 COVER - PLAN

SCALE: 3/4"=1'-0"

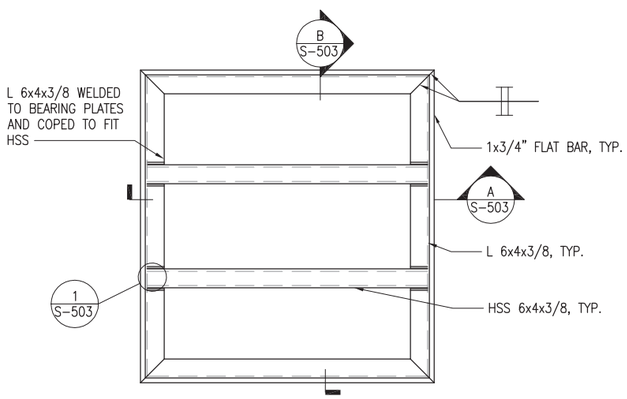

MANHOLE 362 FRAMING - PLAN

SCALE: 3/4"=1'-0"

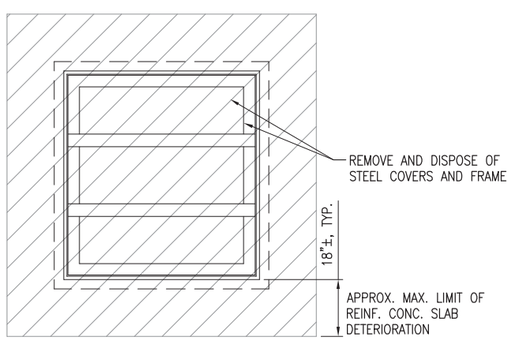

MANHOLE 362 DEMOLITION - PLAN

SCALE: NOT TO SCALE

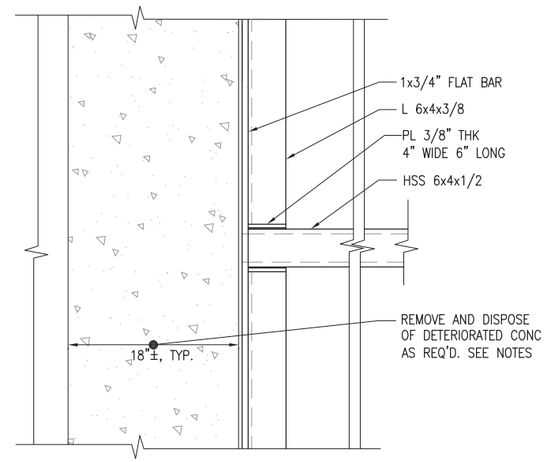

NOTE: COVER NOT SHOWN FOR CLARITY

DETAIL 1

SCALE: 1 1/2"=1'-0" S-503

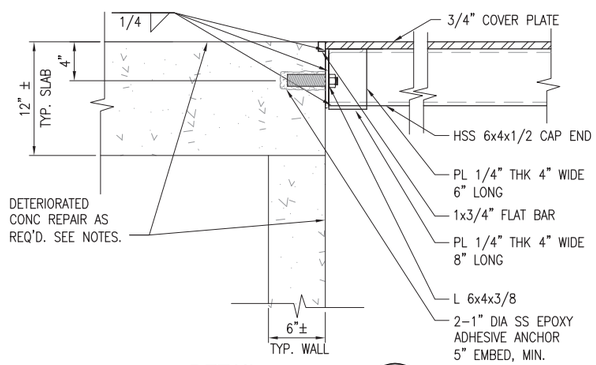

DETAIL 2

SCALE: 1 1/2"=1'-0" S-503

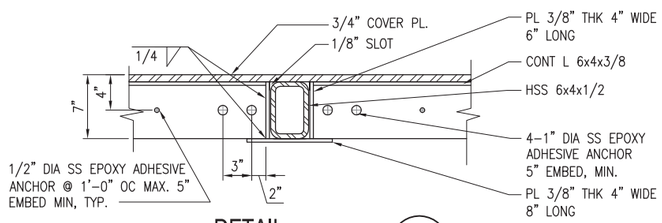

DETAIL 3

SCALE: 1 1/2"=1'-0" S-503

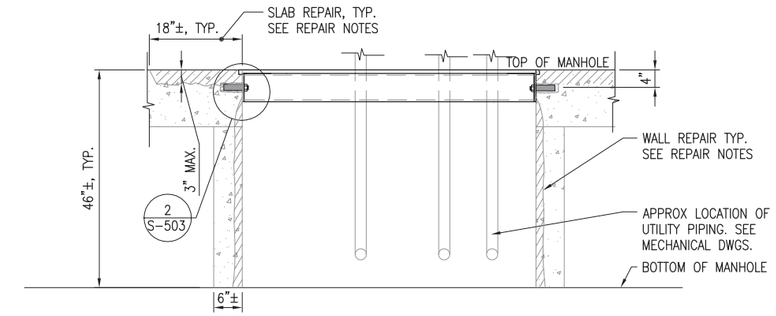

SECTION A

SCALE: 3/4"=1'-0" S-503

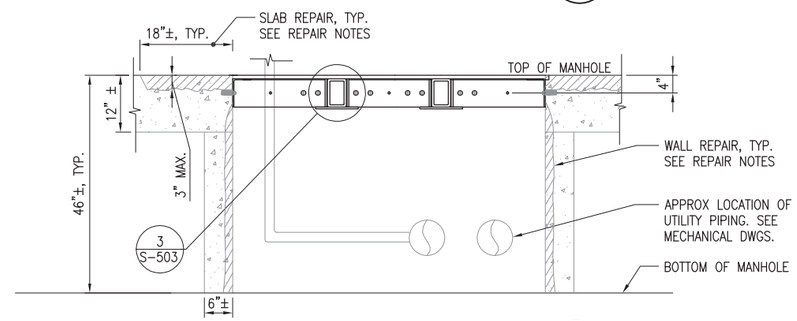

SECTION B

SCALE: 3/4"=1'-0" S-503

NOTES:

1. ALL DETERIORATED CONCRETE REPAIR WORK ON THESE PIER MANHOLES SHALL BE LOCALIZED. NO FULL DEPTH DEMOLITION SHALL TAKE PLACE. SEE DEMOLITION & CONCRETE REPAIR NOTES ON S-001.
2. ALL MEMBERS SHALL BE HOT-DIP GALVANIZED PER ASTM A123 AFTER FABRICATION.
3. DIMENSIONS SHOWN ARE APPROXIMATE. FIELD VERIFY PRIOR TO MATERIAL PROCUREMENT AND FABRICATION.
4. MANHOLES ARE SUSPENDED FROM PIER DECK CONSTRUCTED OF APPROXIMATELY 12" CONCRETE SLABS AND 6" CONCRETE WALLS. IT SHALL BE THE CONTRACTOR'S RESPONSIBILITY TO MAINTAIN THE INTEGRITY OF THE EXISTING PIER STRUCTURES.

GRAPHIC SCALE

0 1' 2' 3' SCALE:3/4"=1'

0 6" 1' 2' SCALE:1-1/2"=1'

SYM	DESCRIPTION	DATE	APPR

NAVFAC

COMMONWEALTH OF MASSACHUSETTS VICTOR M. GOVONI CIVIL No. 41733 REGISTERED PROFESSIONAL ENGINEER

SEAL

ENGINEERS FST Since 1914
FAY, SPOFFORD & THORNDIKE
5 BURLINGTON WOODS BURLINGTON, MA 01803
A/E INFO

APPROVED
FOR COMMANDER NAVFAC
ACTIVITY
SATISFACTORY TO DATE
DES RGN DRW RGN CHK VMG
PWD-ME DM/POC MIKE McCANN
BRANCH MANAGER
CHIEF ENG/ARCH
FIRE PROTECTION

DEPARTMENT OF THE NAVY
NAVAL FACILITIES ENGINEERING COMMAND
PUBLIC WORKS DEPARTMENT - MAINE
NAVAL FACILITIES ENGINEERING COMMAND ~ MID-ATLANTIC
NAVAL SHIPYARD - PORTSMOUTH, NH
PORTSMOUTH NAVAL SHIPYARD
KITTERY, MAINE

REPLACE UTILITIES BERTHS 11 AND 12

DETAILS - SHEET 3 OF 4

MAXIMO No.: 5918670
EPROJECT NO.: 1171704
CONSTR. CONTR. NO.
NAVFAC DRAWING NO. 12650029
SHEET 29 OF 57
S-503 FP2-13-615

DRAWFORM REVISION: 10 MARCH 2009

FILE NAME: U:\BQ-216K\CADD\Structural\BQ-216K-S-503.dwg LAYOUT NAME: S-503 PLOTTED: Tuesday, June 25, 2013 - 10:43am USER: Friber_JH

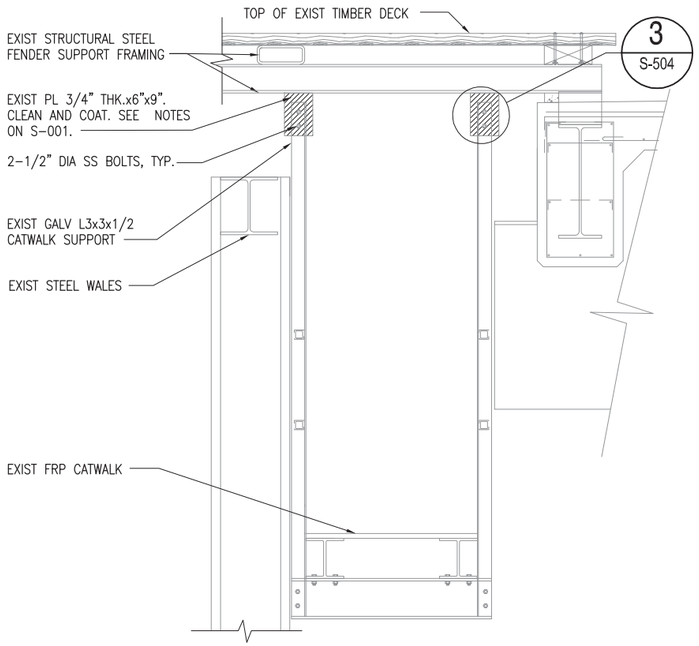

CATWALK HANGER SUPPORT REPAIR DETAIL

SCALE: 3/4"=1'-0" S-102 (1)

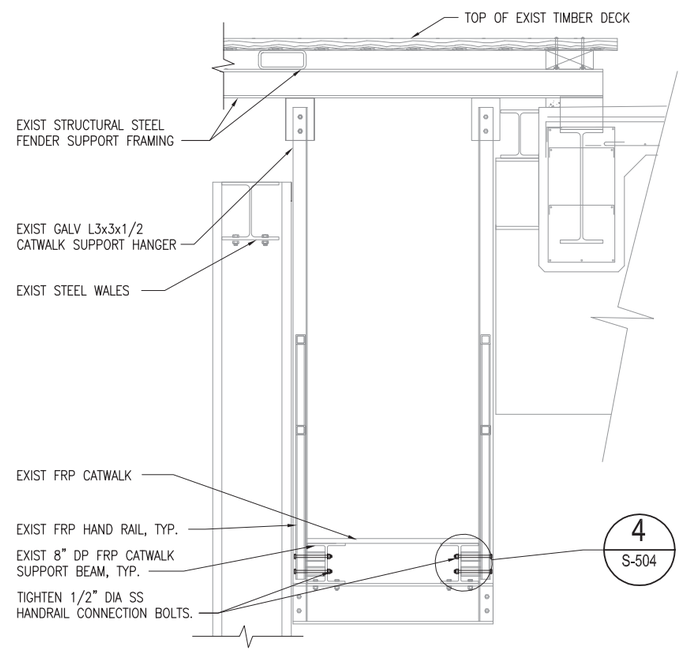

CATWALK HANDRAIL SUPPORT REPAIR SECTION

SCALE: 3/4"=1'-0" S-102 (2)

NOTES:

1. REFER TO STRUCTURAL NOTES, DRAWING S-001 FOR STEEL SURFACE PREPARATION AND COATING REQUIREMENTS.
2. REFER TO CIVIL AND MECHANICAL DRAWINGS FOR PIPE SIZES.

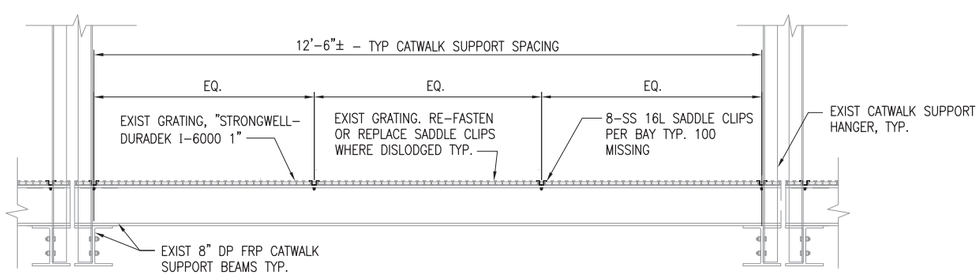

CATWALK GRATING SUPPORT REPAIR DETAIL

SCALE: 3/4"=1'-0" S-101

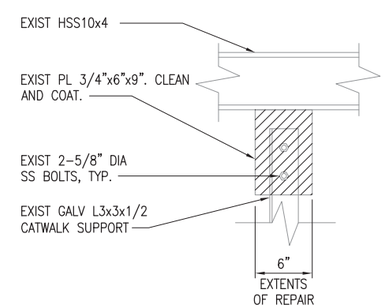

DETAIL

SCALE: 3/4"=1'-0" S-504 (3)

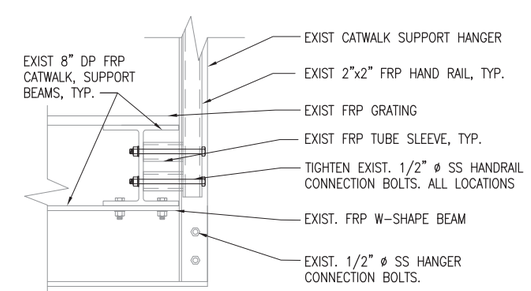

DETAIL

SCALE: 3/4"=1'-0" S-504 (4)

GRAPHIC SCALE

0 1' 2' 3'

SCALE:3/4"=1'

SYM	DESCRIPTION	DATE	APPR

NAVFAC

COMMONWEALTH OF MASSACHUSETTS VICTOR M. GOVONI CIVIL No. 41733 REGISTERED PROFESSIONAL ENGINEER

SEAL

ENGINEERS FST Since 1914
FAY, SPOFFORD & THORNDIKE
5 BURLINGTON WOODS
BURLINGTON, MA 01803
A/E INFO

APPROVED
FOR COMMANDER NAVFAC
ACTIVITY
SATISFACTORY TO DATE
DES RGN DRW RGN CHK VMG
PWD-ME DM/POC MIKE McCANN
BRANCH MANAGER
CHIEF ENG/ARCH
FIRE PROTECTION

DEPARTMENT OF THE NAVY
NAVAL FACILITIES ENGINEERING COMMAND
PUBLIC WORKS DEPARTMENT - MAINE
NAVAL FACILITIES ENGINEERING COMMAND ~ MID-ATLANTIC
NAVAL SHIPYARD - PORTSMOUTH, NH
PORTSMOUTH NAVAL SHIPYARD
KITTERY, MAINE

REPLACE UTLITIES BERTHS 11 AND 12

DETAILS - SHEET 4 OF 4

MAXIMO No.: 5918670
EPROJECT NO.: 1171704
CONSTR. CONTR. NO.
NAVFAC DRAWING NO. 12650030
SHEET 30 OF 57
S-504 FP2-13-616

DRAWFORM REVISION: 10 MARCH 2009

FILE NAME: U:\BG-216K\CADD\Structure\BG-216K-S-504.dwg LAYOUT NAME: S-504 PLOTTED: Tuesday, June 25, 2013 - 10:45am USER: Fiber_JH

LEGEND:

- CONNECT NEW WORK TO EXISTING
- FRESH AIR
- EXHAUST AIR
- FEATURES TO PROVIDED UNDER THIS CONTRACT SHOWN THUS
- EXISTING FEATURES SHOWN THUS
- RISER UP
- RISER DOWN
- BRANCH–TOP CONNECTION
- TEE DOWN
- TEE
- UNION
- FLANGE
- CONCENTRIC REDUCER
- DIRECTION OF FLOW
- DIRECTION OF DOWNWARD PITCH
- CAP ON END OF PIPE
- STRAINER
- TRAP
- BALL VALVE
- CHECK VALVE
- BUTTERFLY VALVE
- —CR— CONDENSATE RETURN
- —FW— FRESH WATER
- —CA— COMPRESSED AIR, 150 PSI
- —SS— SANITARY SEWER
- —HPS— HIGH PRESSURE STEAM, 125 PSI
- (1) DEMOLITION / REMOVAL KEYNOTE NUMBER
- [1] NEW WORK KEYNOTE NUMBER
- PIPELINE ANCHOR
- ALIGNMENT GUIDE
- DOUBLE EXPANSION JOINT WITH ANCHOR
- SINGLE EXPANSION JOINT WITH ANCHOR
- (ST) EXISTING TO REMAIN
- (ST) EXISTING TO REMOVE
- (ST) STMH STEAM MANHOLE
- STHH STEAM HANDHOLE
- (ST) STV STEAM VALVE
- —STM— STEAM
- —A— COMPRESSED AIR
- —HWS/HWR— HOT WATER SUPPLY/RETURN
- —E— ELECTRICAL
- —W— WATER
- —S— SEWER
- —D— DRAIN
- —CND— CONDENSATE
- MANHOLE

ABBREVIATIONS:

A	AIR
AB, ABAND	ABANDONED
ABV	ABOVE
APPROX	APPROXIMATELY
CA	COMPRESSED AIR
CB	CATCH BASIN
CH	CHANNEL
CONC	CONCRETE
CONN	CONNECTION
CND	CONDENSATE
DN	DOWN
EHH	ELECTRICAL HANDHOLE
EJ	EXPANSION JOINT
EL	ELEVATION
EMH	ELECTRICAL MANHOLE
FT	FOOT, FEET
FRP	FIBER REINFORCED PLASTIC
FW	FRESH WATER
GALV	GALVANIZED
HP	HIGH PRESSURE
HDPE	HIGH DENSITY POLYETHYLENE
HOR	HORIZONTAL
HPS	HIGH PRESSURE STEAM
A	AIR
AB, ABAND	ABANDONED
ID	INSIDE DIAMETER
IG	INTERMEDIATE GUIDE
LG	LONG
MAX	MAXIMUM
MH	MANHOLE
MIN	MINIMUM
MFR	MANUFACTURER
MH	MANHOLE
NIC	NOT IN CONTRACT
OD	OUTSIDE DIAMETER
PG	PRIMARY GUIDE
PVC	POLYVINYL CHLORIDE
SS	SANITARY SEWER
SST	STAINLESS STEEL
STM	STEAM
TH	THICK
TYP	TYPICAL
VERT	VERTICAL
VIF	VERIFY IN FIELD
W	WATER

GENERAL NOTES:

1. ALL WORK SHALL BE IN ACCORDANCE WITH THE 2012 INTERNATIONAL MECHANICAL CODE (IMC) AND ASME B31.1 FOR PRESSURE PIPING.
2. PROVIDE PIPE IDENTIFICATION MARKERS EVERY 20 FEET.
3. SUBSURFACE UTILITY LINES AND FEATURES, AS SHOWN HEREON, WERE COMPILED FROM FIELD EVIDENCE AND/OR AVAILABLE RECORD INFORMATION.
4. REMOVAL OF EXISTING PIPING SHALL INCLUDE REMOVAL OF PIPING, VALVES, INSULATION, JACKETING, GUIDES, SUPPORTS, ANCHORS, AND ACCESSORIES.
5. PRIOR TO ENTERING MANHOLES OR OTHER CONFINED SPACES, THE CONTRACTOR SHALL MONITOR FOR HAZARDOUS GASES. THIS MONITORING SHALL CONTINUE WHILE WORK IS BEING PERFORMED IN THE MANHOLE OR CONFINED SPACE.
6. HIGH PRESSURE STEAM SERVICE PRESSURE IS 125 PSI, TEMPERATURE IS 450°F.
7. COMPRESSED AIR PRESSURE IS 150 PSI.
8. EXERCISE CAUTION WHEN PERFORMING WORK ON/IN MANHOLES AS THEY ARE ADJACENT TO ACTIVE CRANE RAILS. DO NOT PLACE ITEMS WITHIN 42" FROM CENTERLINE OF CRANE RAILS.
9. EXERCISE EXTREME CAUTION; 4500 PSI HIGH PRESSURE AIR IN THE AREA.

WORK NOTES:

[1] FOR CONDENSATE DRAIN PIPING, PROVIDE INSULATION FOR BURN PROTECTION. SEAL EXPOSED ENDS OF INSULATION WITH MANUFACTURER'S STANDARD SEALANT. PAINT EXPOSED ENDS OF INSULATION WITH SUITABLE PAINT WITH AN ALLOWABLE TEMPERATURE RANGE BETWEEN 140 AND 260 DEGREES FAHRENHEIT. DESIGN BASED ON HI–TEMP COATING #1027. PAINT COLOR SHALL BE GRAY.

[2] PAINT STEAM AND CONDENSATE PIPE IN MANHOLES WITH A INORGANIC ZINC RICH PRIMER. ACCEPTABLE ZINC RICH PRIMERS ARE PITTSBURGH METALHIDE 1001, SHERMAN WILLIAMS ZINC–CLAD 11 HS AND CARBOLINE CARBO–ZINC II. PRIMER THICKNESS 2 MIL MINIMUM DFT; 4 MILS MAXIMUM DFT. PAINT TOP COAT USING EPOXY POLYAMIDE PER MANUFACTURER'S INSTRUCTIONS.

EXPANSION JOINT SCHEDULE

MARK	EJ–1	EJ–2	EJ–3	EJ–4	EJ–5	EJ–6	EJ–7	EJ–8
FLUID	SAT STEAM	SAT STEAM	SAT STEAM	SAT STEAM	SAT STEAM	SAT STEAM	SAT STEAM	SAT STEAM
STM PRESSURE, PSI	125	125	125	125	125	125	125	125
TEMPERATURE, °F	450	450	450	450	450	450	450	450
PRESS CLASS, PSI	150	150	150	150	150	150	150	150
PIPE SIZE	6"	6"	6"	6"	6"	6"	6"	6"
TYPE	DOUBLE	SINGLE	SINGLE	SINGLE	SINGLE	SINGLE	SINGLE	SINGLE
TOTAL EXPANSION, IN	2.2*	6.0	6.3	6.3	6.3	6.3	6.3	4.8
BODY END	WELDED	WELDED	WELDED	WELDED	WELDED	WELDED	WELDED	WELDED
SLIP END	PLAIN	PLAIN	PLAIN	PLAIN	PLAIN	PLAIN	PLAIN	PLAIN
ANCHOR BASE	YES	YES	YES	YES	YES	YES	YES	YES
DIRT LEG	NO	NO	NO	NO	NO	NO	NO	NO
SERVICE CONNECTION	NO	NO	NO	NO	NO	NO	NO	NO
**PACKING CYLINDER	STANDARD	STANDARD	STANDARD	STANDARD	STANDARD	STANDARD	STANDARD	STANDARD
RING PACKING	GRAPHITE	GRAPHITE	GRAPHITE	GRAPHITE	GRAPHITE	GRAPHITE	GRAPHITE	GRAPHITE
DESIGN BASED ON MFR ADVANCED THERMAL SYSTEMS	ATS TP2	ATS TP2	ATS TP2	ATS TP2	ATS TP2	ATS TP2	ATS TP2	ATS TP2

* EACH DIRECTION

** PROVIDE SPECIAL CYLINDER ORIENTATION, AS REQUIRED FOR FIELD INSTALLATION

PIPE SUPPORTS QUANTITIES

TYPE	LOCATION	STEAM	COMPRESSED AIR	REFERENCE	
				DRAWING NO.	DETAIL NO.
EXPANSION JOINT ANCHOR BASE	UNDER DECK	7	–	M–501	6
EXPANSION JOINT ANCHOR BASE	ABOVE DECK	1	–	M–104	–
GUIDE	UNDER DECK	48	18	M–501	4, 10
GUIDE	ABOVE DECK	4	2	M–101, M–104	–
ANCHOR	UNDER DECK	1	–	M–501	5
ANCHOR	ABOVE DECK	2	1	M–101, 104	–
PLATE ANCHOR	IN MANHOLE	–	8	M–302	A
ROLLER HANGER	UNDER DECK	–	16	M–501	9
ROLLER SUPPORT	UNDER DECK	58	58	M–301	B, G
ROLLER SUPPORT	ABOVE DECK	6	6	M–301	E
OUTLET SUPPORT	IN MANHOLE	8	8	M–302	A
OUTLET SUPPORT, EXISTING	ABOVE DECK	9	9	MODIFY EXISTING AS REQUIRED	

SYM	DESCRIPTION	DATE	APPR

NAVFAC

COMMONWEALTH OF MASSACHUSETTS MICHAEL W. TRAVERS MECHANICAL No. 45711 PROFESSIONAL ENGINEER

SEAL

ENGINEERS FST Since 1914
FAY, SPOFFORD & THORNDIKE
5 BURLINGTON WOODS
BURLINGTON, MA 01803
A/E INFO

APPROVED

FOR COMMANDER NAVFAC

ACTIVITY

SATISFACTORY TO DATE

DES YK | DRW YK | CHK MWT

PWD–ME DM/POC MIKE McCANN

BRANCH MANAGER

CHIEF ENG/ARCH

FIRE PROTECTION

DEPARTMENT OF THE NAVY
NAVAL FACILITIES ENGINEERING COMMAND
NAVAL FACILITIES ENGINEERING COMMAND – MID-ATLANTIC
PUBLIC WORKS DEPARTMENT – MAINE
NAVAL SHIPYARD – PORTSMOUTH, NH
PORTSMOUTH NAVAL SHIPYARD
KITTERY, MAINE

REPLACE UTLITIES
BERTHS 11 AND 12

GENERAL NOTES, LEGEND AND ABBREVIATIONS

MAXIMO No.: 5918670

EPROJECT NO.: 1171704

CONSTR. CONTR. NO.

NAVFAC DRAWING NO.
12650031

SHEET 31 OF 57

M-001 | FP2-13-617

DRAWFORM REVISION: 10 MARCH 2009

FILE NAME: U:\BQ-216K\CADD\Mechanical\BQ-216K-M-001.dwg LAYOUT NAME: M-001 PLOTTED: Tuesday, June 25, 2013 - 10:45am USER: Friber_H

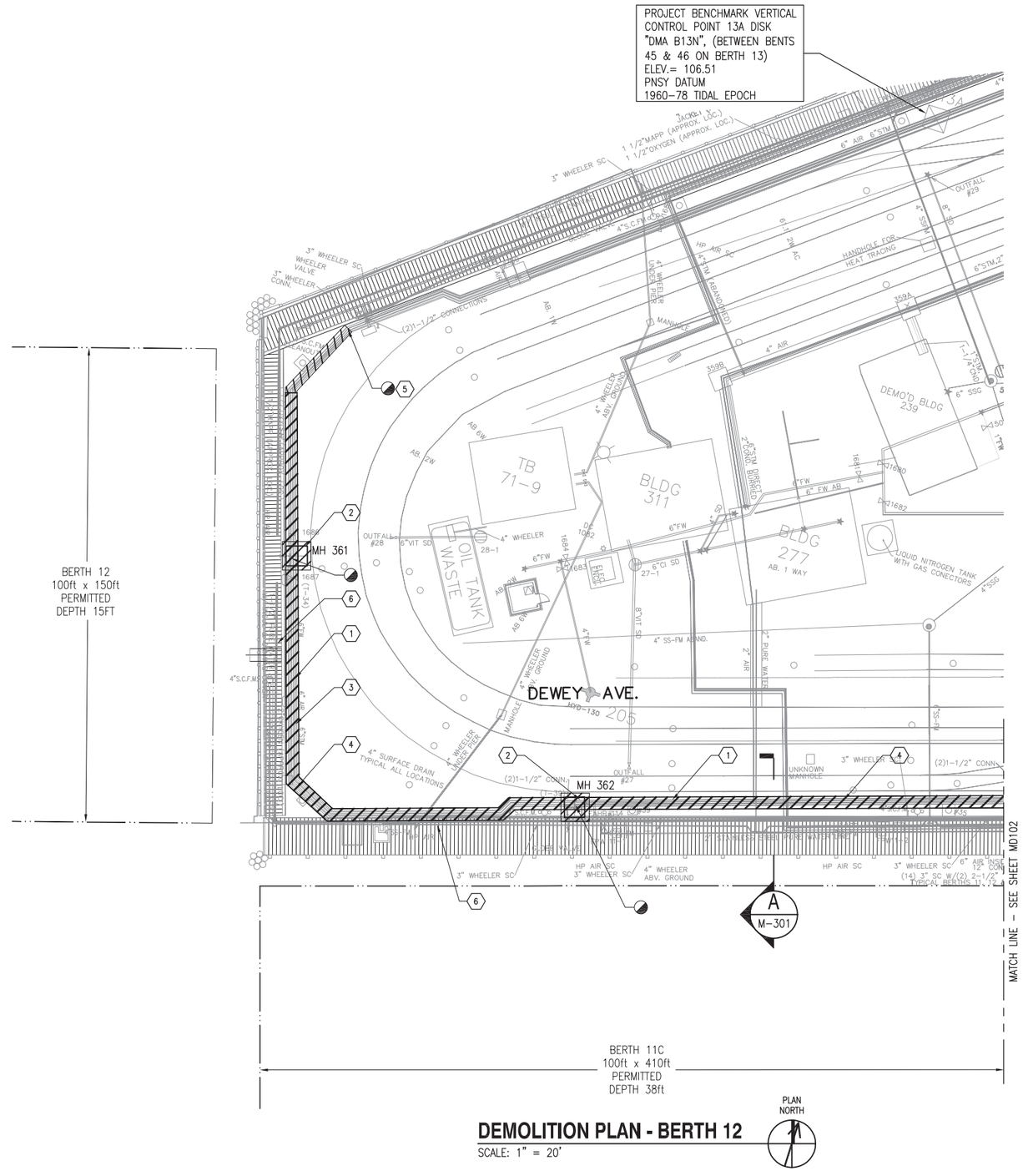

DEMOLITION PLAN - BERTH 12

SCALE: 1" = 20'

DEMOLITION NOTES:

1. REMOVE EXISTING 6" HIGH PRESSURE STEAM AND 6" COMPRESSED AIR PIPING EXPOSED UNDER THE DECK. REMOVE AND DISPOSE OF SUPPORTS AND INSULATION.
2. REMOVE AND DISPOSE OF STEAM AND COMPRESSED AIR PIPING, VALVES, TRAPS, AND SUPPORTS IN MANHOLES AND ABOVE GROUND.
3. REMOVE AND DISPOSE OF STEAM EXPANSION JOINTS, ANCHORS, AND GUIDES.
4. REMOVE AND DISPOSE OF COMPRESSED AIR DOUBLE EXPANSION LOOPS, ANCHORS, AND GUIDES.
5. REMAIN EXISTING STEAM AND COMPRESSED AIR PIPING FOR RECONNECTION.
6. THERE IS A 4500 PSI HIGH PRESSURE AIR PIPE IN AREA. CONTRACTOR SHALL EXERCISE EXTREME CAUTION.

KEY PLAN

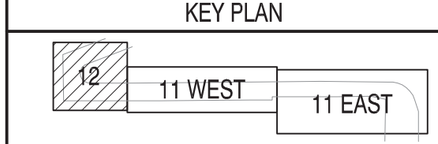

GRAPHIC SCALE

0 10' 20' 40'

SCALE:1"=20'

SYM	DESCRIPTION	DATE	APPR

NAVFAC

COMMONWEALTH OF MASSACHUSETTS MICHAEL W. TRAVERS MECHANICAL No. 45711 REGISTERED PROFESSIONAL ENGINEER

SEAL

ENGINEERS FST Since 1914
FAY, SPOFFORD & THORNDIKE
5 BURLINGTON WOODS
BURLINGTON, MA 01803

A/E INFO

APPROVED

FOR COMMANDER NAVFAC

ACTIVITY

SATISFACTORY TO DATE

DES YK DRW YK CHK MWT

PWD–ME DM/POC MIKE McCANN

BRANCH MANAGER

CHIEF ENG/ARCH

FIRE PROTECTION

DEPARTMENT OF THE NAVY
NAVAL FACILITIES ENGINEERING COMMAND ~ MID-ATLANTIC
PUBLIC WORKS DEPARTMENT – MAINE
NAVAL FACILITIES ENGINEERING COMMAND
NAVAL SHIPYARD – PORTSMOUTH, NH
PORTSMOUTH NAVAL SHIPYARD
KITTERY, MAINE

REPLACE UTLITIES
BERTHS 11 AND 12

DEMOLITION PLAN – BERTH 12

MAXIMO No.: 5918670

EPROJECT NO.: 1171704

CONSTR. CONTR. NO.

NAVFAC DRAWING NO. 12650032

SHEET 32 OF 57

MD101 FP2-13-618

DRAWFORM REVISION: 10 MARCH 2009

FILE NAME: U:\BG-216K\CADD\Mechanical\BG-216K-MD101-03.dwg LAYOUT NAME: MD101 PLOTTED: Tuesday, June 25, 2013 – 10:45am USER: Friber_H

DEMOLITION NOTES:

1. REMOVE EXISTING 6" HIGH PRESSURE STEAM AND 6" COMPRESSED AIR PIPING EXPOSED UNDER THE DECK. REMOVE AND DISPOSE OF SUPPORTS AND INSULATION.
2. REMOVE AND DISPOSE OF STEAM AND COMPRESSED AIR PIPING, VALVES, TRAPS, AND SUPPORTS IN MANHOLES AND ABOVE GROUND.
3. REMOVE AND DISPOSE OF STEAM EXPANSION JOINTS, ANCHORS, AND GUIDES.
4. REMOVE AND DISPOSE OF COMPRESSED AIR DOUBLE EXPANSION LOOPS, ANCHORS, AND GUIDES.
5. REMAIN EXISTING STEAM AND COMPRESSED AIR PIPING FOR RECONNECTION.
6. THERE IS A 4500 PSI HIGH PRESSURE AIR PIPE IN AREA. CONTRACTOR SHALL EXERCISE EXTREME CAUTION.

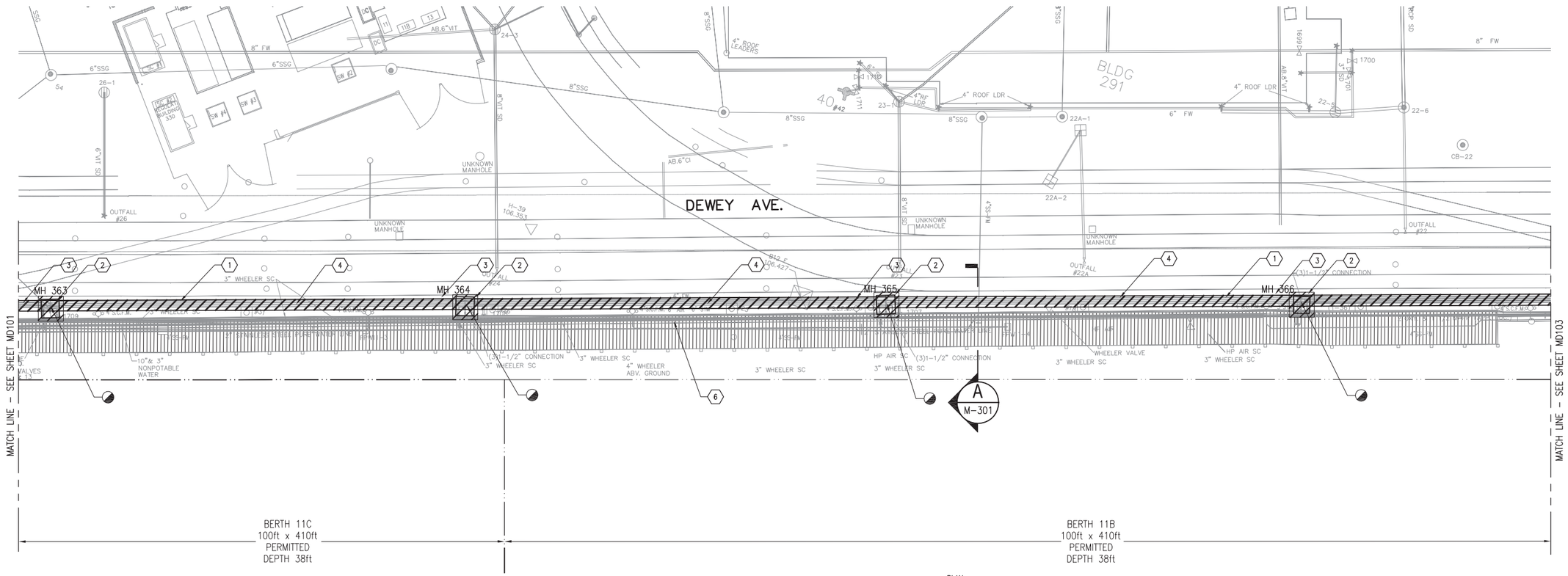

DEMOLITION PLAN - BERTH 11 WEST

SCALE: 1" = 20'

PLAN NORTH

KEY PLAN

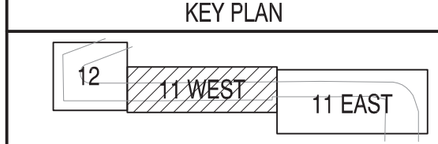

GRAPHIC SCALE

0 10' 20' 40'

SCALE:1"=20'

SYM	DESCRIPTION	DATE	APPR			

NAVFAC

COMMONWEALTH OF MASSACHUSETTS
MICHAEL W. TRAVERS
MECHANICAL
No. 45711
REGISTERED PROFESSIONAL ENGINEER

SEAL

ENGINEERS
FST
Since 1914
FAY, SPOFFORD & THORNDIKE
5 BURLINGTON WOODS
BURLINGTON, MA 01803
A/E INFO

APPROVED

FOR COMMANDER NAVFAC

ACTIVITY

SATISFACTORY TO DATE

DES YK | DRW YK | CHK MWT

PWD-ME DM/POC MIKE McCANN

BRANCH MANAGER

CHIEF ENG/ARCH

FIRE PROTECTION

DEPARTMENT OF THE NAVY
NAVAL FACILITIES ENGINEERING COMMAND
PUBLIC WORKS DEPARTMENT - MAINE
NAVAL FACILITIES ENGINEERING COMMAND ~ MID-ATLANTIC
NAVAL SHIPYARD - PORTSMOUTH, NH
PORTSMOUTH NAVAL SHIPYARD
KITTERY, MAINE

REPLACE UTILITIES
BERTHS 11 AND 12

DEMOLITION PLAN - BERTH 11 WEST

MAXIMO No.: 5918670

EPROJECT NO.: 1171704

CONSTR. CONTR. NO.

NAVFAC DRAWING NO.
12650033

SHEET 33 OF 57

MD102 | FP2-13-619

DRAWFORM REVISION: 10 MARCH 2009

FILE NAME: U:\BQ-2166\CADD\Mechanical\BQ-2166-MD101-03.dwg LAYOUT NAME: MD102 PLOTTED: Tuesday, June 25, 2013 - 10:46am USER: Friber_JH

DEMOLITION NOTES:

1. REMOVE EXISTING 6" HIGH PRESSURE STEAM AND 6" COMPRESSED AIR PIPING EXPOSED UNDER THE DECK. REMOVE AND DISPOSE OF SUPPORTS AND INSULATION.
2. REMOVE AND DISPOSE OF STEAM AND COMPRESSED AIR PIPING, VALVES, TRAPS, AND SUPPORTS IN MANHOLES AND ABOVE GROUND.
3. REMOVE AND DISPOSE OF STEAM EXPANSION JOINTS, ANCHORS, AND GUIDES.
4. REMOVE AND DISPOSE OF COMPRESSED AIR DOUBLE EXPANSION LOOPS, ANCHORS, AND GUIDES.
5. REMAIN EXISTING STEAM AND COMPRESSED AIR PIPING FOR RECONNECTION.
6. THERE IS A 4500 PSI HIGH PRESSURE AIR PIPE IN AREA. CONTRACTOR SHALL EXERCISE EXTREME CAUTION.

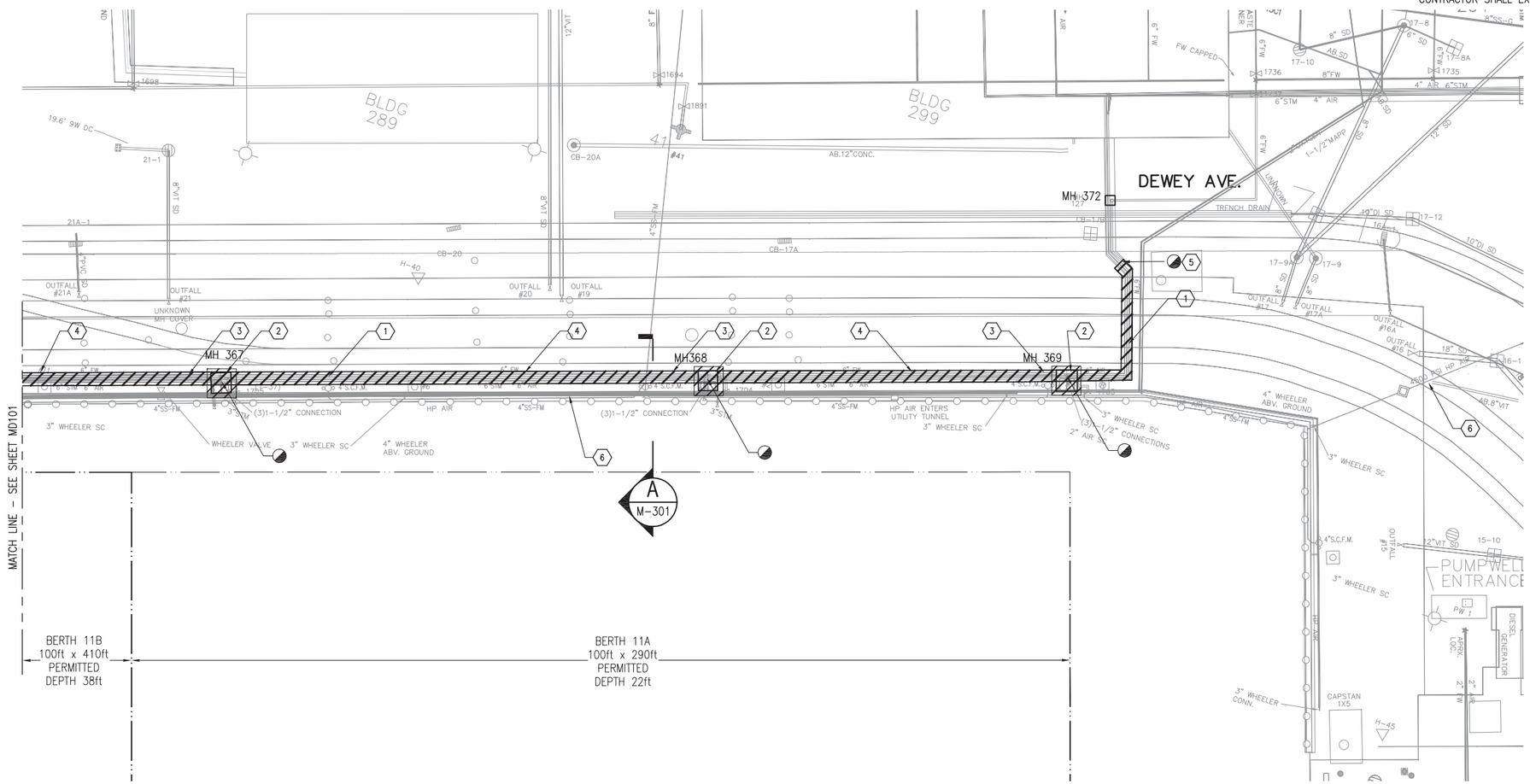

PLAN NORTH

DEMOLITION PLAN - BERTH 11 EAST

SCALE: 1" = 20'

KEY PLAN

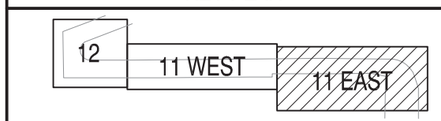

GRAPHIC SCALE

0 10' 20' 40'

SCALE:1"=20'

APPR	DATE	DESCRIPTION	STM

NAVFAC

COMMONWEALTH OF MASSACHUSETTS
MICHAEL W. TRAVERS
MECHANICAL
No. 45711
REGISTERED PROFESSIONAL ENGINEER
SEAL

ENGINEERS
FST
Since 1914
FAY, SPOFFORD & THORNDIKE
5 BURLINGTON WOODS
BURLINGTON, MA 01803
A/E INFO

APPROVED
FOR COMMANDER NAVFAC
ACTIVITY
SATISFACTORY TO DATE
DES YK DRW YK CHK MWT
PWD-ME DM/POC MIKE McCANN
BRANCH MANAGER
CHIEF ENG/ARCH
FIRE PROTECTION

DEPARTMENT OF THE NAVY
NAVAL FACILITIES ENGINEERING COMMAND
PUBLIC WORKS DEPARTMENT – MAINE
NAVAL FACILITIES ENGINEERING COMMAND – MID-ATLANTIC
NAVAL SHIPYARD – PORTSMOUTH, NH
PORTSMOUTH NAVAL SHIPYARD
KITTERY, MAINE
REPLACE UTILITIES
BERTHS 11 AND 12
DEMOLITION PLAN – BERTH 11 EAST

MAXIMO No.: 5918670
EPROJECT NO.: 1171704
CONSTR. CONTR. NO.
NAVFAC DRAWING NO. 12650034
SHEET 34 OF 57
MD103 FP2-13-620

DRAWFORM REVISION: 10 MARCH 2009

FILE NAME: U:\BG-216K\CAD3\Mechanical\BG-216K-MD101-03.dwg LAYOUT NAME: MD103 PLOTTED: Tuesday, June 25, 2013 - 10:46am USER: Friber_H

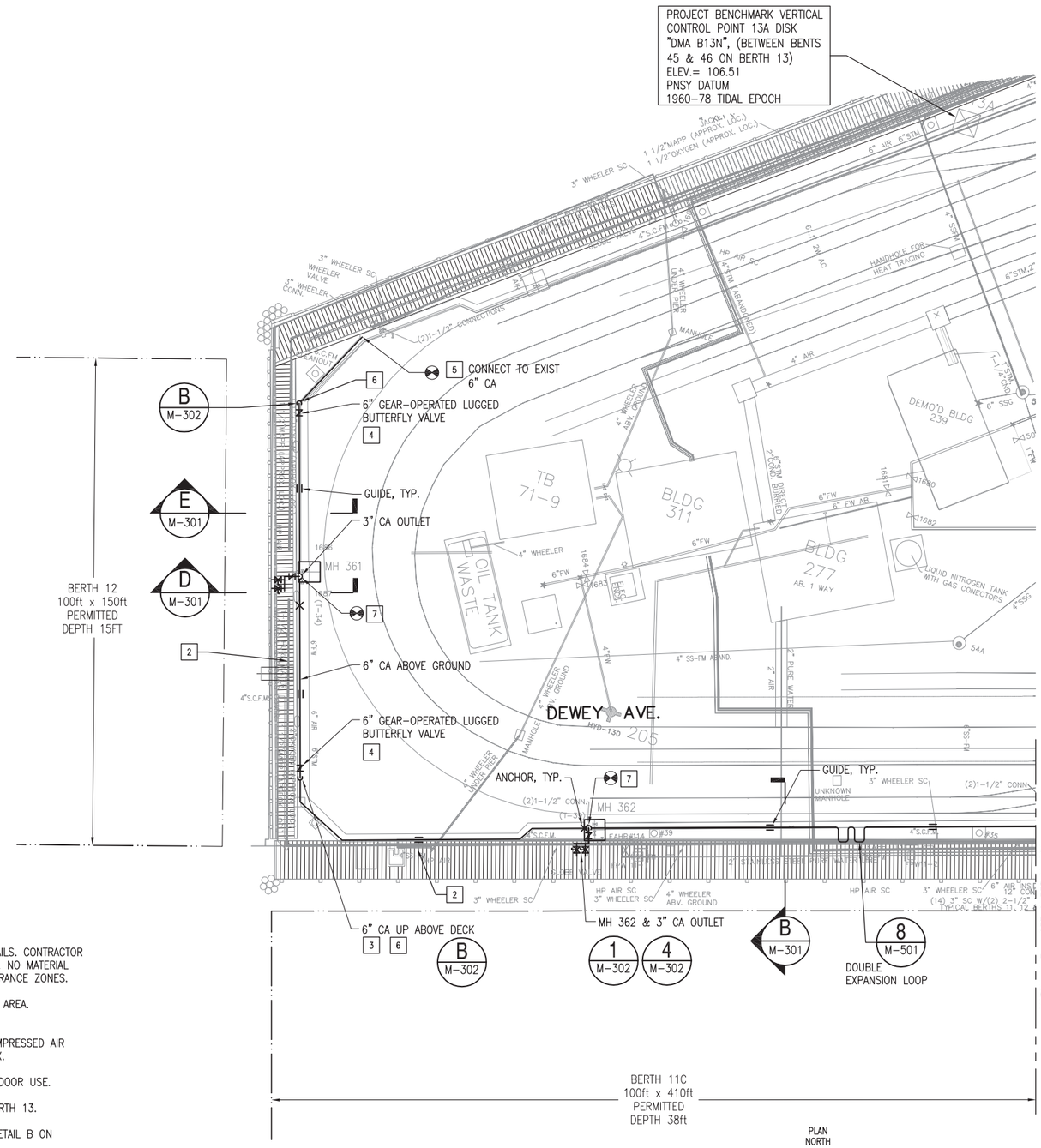

COMPRESSED AIR PLAN - BERTH 12

SCALE: 1" = 20'

NEW WORK NOTES:

1. THE MANHOLES ARE ADJACENT TO ACTIVE CRANE RAILS. CONTRACTOR SHALL EXERCISE CAUTION WHEN PERFORMING WORK. NO MATERIAL SHALL BE PLACED OR STORED AT THE CRANE CLEARANCE ZONES.
2. THERE IS A 4500 PSI HIGH PRESSURE AIR PIPE IN AREA. CONTRACTOR SHALL EXERCISE EXTREME CAUTION.
3. PROVIDE 4 FEET MINIMUM CLEARANCE BETWEEN COMPRESSED AIR PIPE AND EXISTING ELECTRIC SHIP CONNECTION BOX.
4. PROVIDE WEATHERPROOF ACTUATOR RATED FOR OUTDOOR USE.
5. CONNECT TO EXISTING COMPRESSED AIR AT THE BERTH 13.
6. PROVIDE PIPE PENETRATION THROUGH DECK. SEE DETAIL B ON DRAWING M-302.
7. PROVIDE NEW COMPRESSED AIR OUTLET ABOVE GROUND. SEE DETAIL D ON DRAWING M-301.
8. PROVIDE NEW COMPRESSED AIR OUTLET ABOVE GROUND. SEE DETAILS ON DRAWING M-302.

KEY PLAN

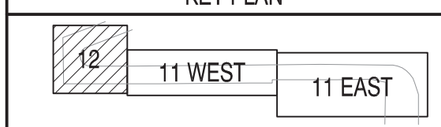

GRAPHIC SCALE

0 10' 20' 40'

SCALE:1"=20'

STM	DESCRIPTION	DATE	APPR

NAVFAC

COMMONWEALTH OF MASSACHUSETTS
MICHAEL W. TRAVERS
MECHANICAL
No. 45711
REGISTERED PROFESSIONAL ENGINEER

SEAL

ENGINEERS
FST
Since 1914
FAY, SPOFFORD & THORNDIKE
5 BURLINGTON WOODS
BURLINGTON, MA 01803
A/E INFO

APPROVED
FOR COMMANDER NAVFAC
ACTIVITY
SATISFACTORY TO DATE
DES YK | DRW YK | CHK MWT
PWD-ME DM/POC MIKE McCANN
BRANCH MANAGER
CHIEF ENG/ARCH
FIRE PROTECTION

DEPARTMENT OF THE NAVY
NAVAL FACILITIES ENGINEERING COMMAND
PUBLIC WORKS DEPARTMENT - MAINE
NAVAL FACILITIES ENGINEERING COMMAND - MID-ATLANTIC
NAVAL SHIPYARD - PORTSMOUTH, NH
PORTSMOUTH NAVAL SHIPYARD
KITTERY, MAINE

REPLACE UTLITIES BERTHS 11 AND 12

COMPRESSED AIR PLAN - BERTH 12

MAXIMO No.: 5918670
EPROJECT NO.: 1171704
CONSTR. CONTR. NO.
NAVFAC DRAWING NO. 12650035
SHEET 35 OF 57
M-101 | FP2-13-621

DRAWFORM REVISION: 10 MARCH 2009

FILE NAME: U:\BQ-216K\CADD\Mechanical\BQ-216K-M-101-03.dwg LAYOUT NAME: M-101 PLOTTED: Tuesday, June 25, 2013 - 10:46am USER: Friber_H

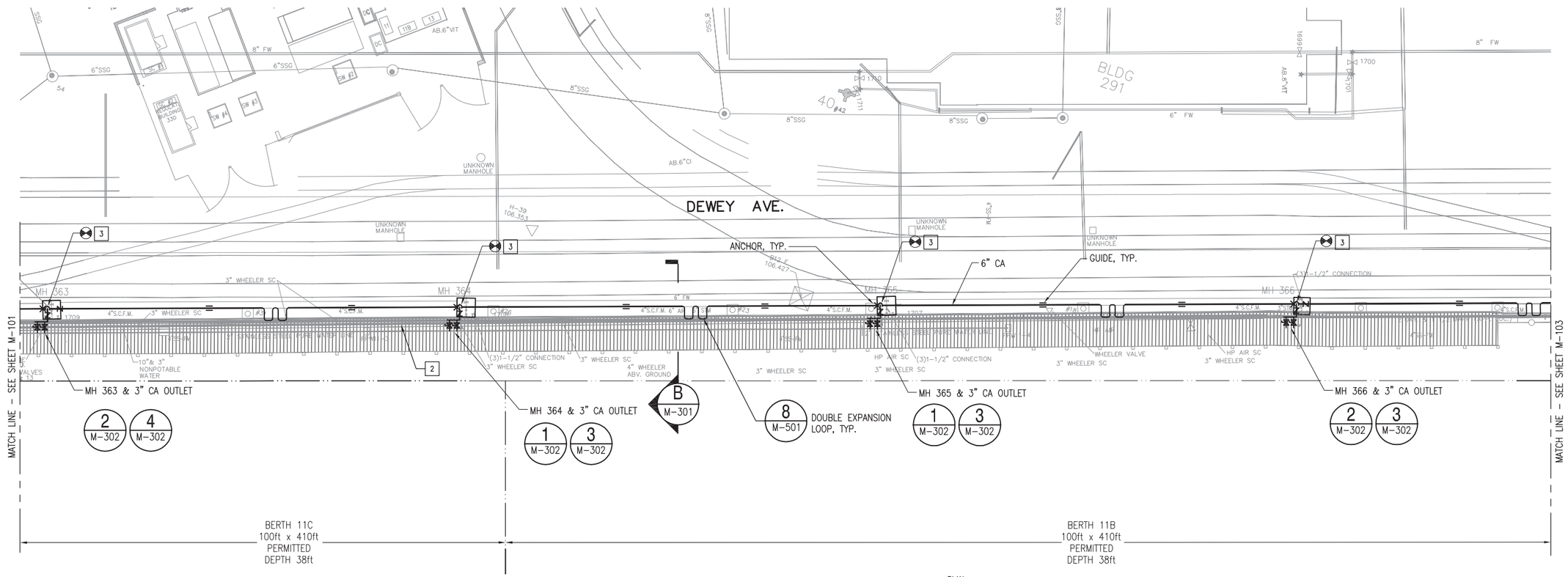

COMPRESSED AIR PLAN - BERTH 11 WEST

SCALE: 1" = 20'

NEW WORK NOTES:

1. THE MANHOLES ARE ADJACENT TO ACTIVE CRANE RAILS. CONTRACTOR SHALL EXERCISE CAUTION WHEN PERFORMING WORK. NO MATERIAL SHALL BE PLACED OR STORED AT THE CRANE CLEARANCE ZONES.
2. THERE IS A 4500 PSI HIGH PRESSURE AIR PIPE IN AREA. CONTRACTOR SHALL EXERCISE EXTREME CAUTION.
3. PROVIDE NEW COMPRESSED AIR OUTLET ABOVE GROUND. SEE DETAILS ON DRAWING M-302.

KEY PLAN

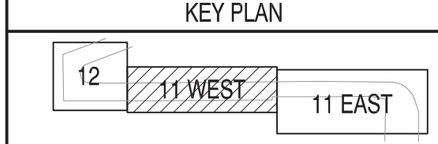

GRAPHIC SCALE

0 10' 20' 40'

SCALE:1"=20'

SYM	DESCRIPTION	DATE	APPR

NAVFAC

COMMONWEALTH OF MASSACHUSETTS
MICHAEL W. TRAVERIS
MECHANICAL
No. 45711
REGISTERED PROFESSIONAL ENGINEER
SEAL

ENGINEERS FST Since 1914
FAY, SPOFFORD & THORNDIKE
5 BURLINGTON WOODS
BURLINGTON, MA 01803
A/E INFO

APPROVED
FOR COMMANDER NAVFAC
ACTIVITY
SATISFACTORY TO DATE
DES YK DRW YK CHK MWT
PWD-ME DM/POC MIKE McCANN
BRANCH MANAGER
CHIEF ENG/ARCH
FIRE PROTECTION

DEPARTMENT OF THE NAVY
NAVAL FACILITIES ENGINEERING COMMAND
PUBLIC WORKS DEPARTMENT - MAINE
NAVAL FACILITIES ENGINEERING COMMAND ~ MID-ATLANTIC
NAVAL SHIPYARD - PORTSMOUTH, NH
PORTSMOUTH NAVAL SHIPYARD
KITTERY, MAINE

REPLACE UTLITIES BERTHS 11 AND 12

COMPRESSED AIR PLAN - BERTH 11 WEST

MAXIMO No.: 5918670
EPROJECT NO.: 1171704
CONSTR. CONTR. NO.
NAVFAC DRAWING NO. 12650036
SHEET 36 OF 57
M-102 FP2-13-622
DRAWFORM REVISION: 10 MARCH 2009

FILE NAME: U:\BQ-2166\CADD\Mechanical\BQ-2166-M-101-03.dwg LAYOUT NAME: M-102 PLOTTED: Tuesday, June 25, 2013 - 10:46am USER: Friber_H