PORTSMOUTH NAVAL SHIPYARD
KITTERY, ME

STRUCTURAL REPAIRS AT BERTHS 11A, 11B AND 11C
CONTRACT NO. N40085-XX-C-XXXX

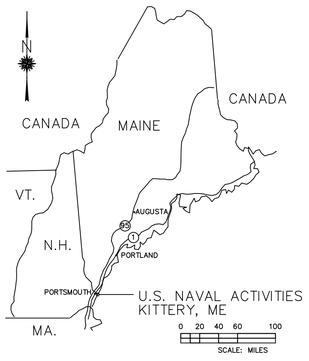

AREA MAP

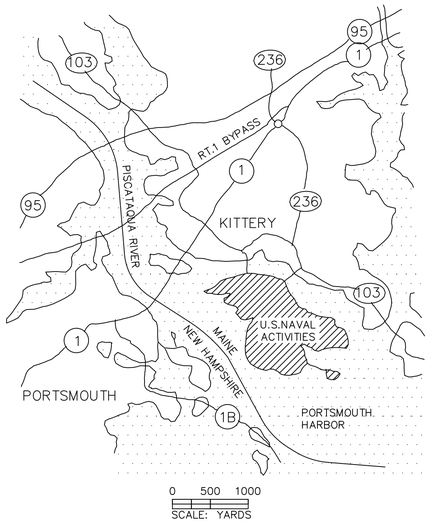

VICINITY MAP

SEE SHEET G-002 FOR LIST OF DRAWINGS

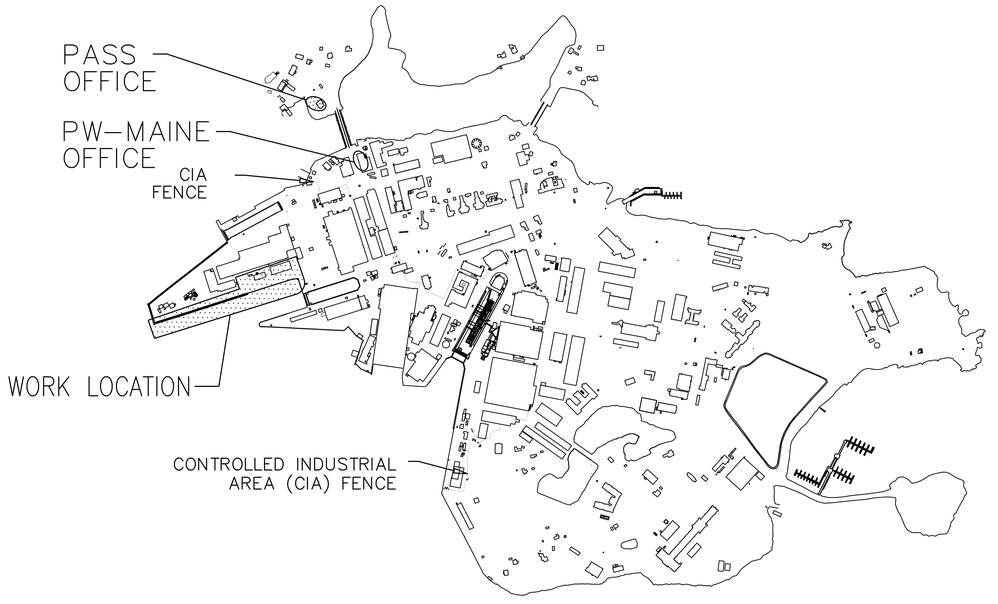

SITE PLAN
NOT TO SCALE

ELEVATION, SECTION OR DETAIL SYMBOLS

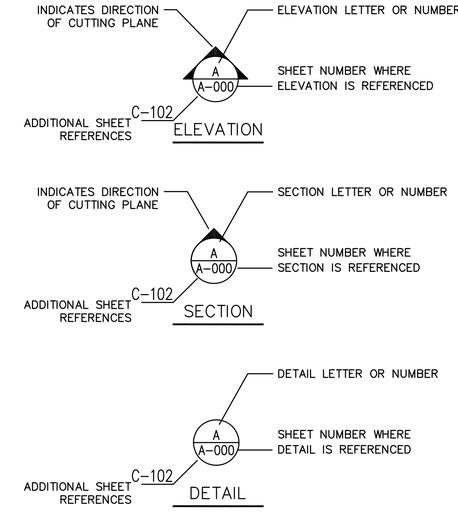

SYM	DESCRIPTION	DATE	APPR

NAVFAC

STATE OF MAINE
PAUL F. HARRINGTON
13061
LICENSED
PROFESSIONAL ENGINEER
3-7-16
SEAL

MN FST
A JOINT VENTURE
A/E INFO

APPROVED
David W. Greenfield
FOR COMMANDER NAVFAC

ACTIVITY:
PER DOCUMENT FROM PNSY CODE 980, KITTERY ME

SATISFACTORY TO DATE: 05/09/16

DES CHG DRW CHG CHK DWH

PM/DM: NATHAN LIBBY
BRANCH MANAGER: NATHAN MAHER
FEAD/PM&E: AMIN BAHROUR
FIRE PROTECTION: N/A

DEPARTMENT OF THE NAVY
NAVAL FACILITIES ENGINEERING COMMAND
NAVAL FACILITIES ENGINEERING COMMAND ~ MID-ATLANTIC
PUBLIC WORKS DEPARTMENT - MAINE
NAVAL SHIPYARD - PORTSMOUTH, NH
PORTSMOUTH NAVAL SHIPYARD
KITTERY, MAINE

STRUCTURAL REPAIRS AT BERTHS 11A, 11B AND 11C

TITLE SHEET

EPROJECT NO.: 1356489
CONSTR. CONTR. NO. N40085-XX-C-XXXX
NAVFAC DRAWING NO. 12715997
SHEET 1 OF 144
G-001 FP2-16-637
DRAWFORM REVISION: 10 OCTOBER 2014

FILE NAME: S:\1794\Active\179410203\r\TP-104A PNSY Lifting Study\TP-104A PNSY Lifting Study\02 CADD\01 General\FP2-16-637.dwg LAYOUT NAME: TITLE SHEET PLOTTED: Friday, May 13, 2016 - 2:20pm USER: cgoodridge

LIST OF DRAWINGS

SHEET	DRAWING NO	PWD ME DWG NO	NAVFAC NO	DRAWING TITLE
1	G-001	FP2-16-637	12715997	TITLE SHEET
2	G-002	FP2-16-638	12715998	DRAWING LIST
3	G-003	FP2-16-639	12715999	GENERAL NOTES
4	G-004	FP2-16-640	12716000	ABBREVIATIONS & LEGEND
5	G-005	FP2-16-641	12716001	DESIGN DATA – SHEET 1 OF 2
6	G-006	FP2-16-642	12716002	DESIGN DATA – SHEET 2 OF 2
7	G-101	FP2-16-643	12716003	GENERAL PLAN
8	G-102	FP2-16-644	12716004	PHASING PLAN – PHASE 1
9	G-103	FP2-16-645	12716005	PHASING PLAN – PHASE 2
10	G-104	FP2-16-646	12716006	PHASING PLAN – PHASE 3
11	G-105	FP2-16-647	12716007	PHASING PLAN – PHASE 4
12	G-106	FP2-16-648	12716008	TEMPORARY SIGNAGE PLAN
13	G-107	FP2-16-649	12716009	SITE ACCESS PLAN
14	G-108	FP2-16-650	12716010	STAGING PLAN
15	G-301	FP2-16-651	12716011	GENERAL SECTIONS
16	G-302	FP2-16-652	12716012	PHASING SECTION – SHEET 1 OF 2
17	G-303	FP2-16-653	12716013	PHASING SECTION – SHEET 2 OF 2
18	V-101	FP2-16-654	12716014	EXISTING CONDITIONS – GENERAL NOTES AND LEGEND
19	V-102	FP2-16-655	12716015	EXISTING CONDITIONS PLAN – SHEET 1 OF 3
20	V-103	FP2-16-656	12716016	EXISTING CONDITIONS PLAN – SHEET 2 OF 3
21	V-104	FP2-16-657	12716017	EXISTING CONDITIONS PLAN – SHEET 3 OF 3
22	V-105	FP2-16-658	12716018	HYDROGRAPHIC SURVEY PLAN
23	H-001	FP2-16-659	12716019	HAZARDOUS MATERIAL GENERAL NOTES
24	H-101	FP2-16-660	12716020	HAZARDOUS MATERIAL ABATEMENT
25	B-101	FP2-16-661	12716021	BORING LOCATION PLAN
26	B-601	FP2-16-662	12716022	BORING LOGS – SHEET 1 OF 17
27	B-602	FP2-16-663	12716023	BORING LOGS – SHEET 2 OF 17
28	B-603	FP2-16-664	12716024	BORING LOGS – SHEET 3 OF 17
29	B-604	FP2-16-665	12716025	BORING LOGS – SHEET 4 OF 17
30	B-605	FP2-16-666	12716026	BORING LOGS – SHEET 5 OF 17
31	B-606	FP2-16-667	12716027	BORING LOGS – SHEET 6 OF 17
32	B-607	FP2-16-668	12716028	BORING LOGS – SHEET 7 OF 17
33	B-608	FP2-16-669	12716029	BORING LOGS – SHEET 8 OF 17
34	B-609	FP2-16-670	12716030	BORING LOGS – SHEET 9 OF 17
35	B-610	FP2-16-671	12716031	BORING LOGS – SHEET 10 OF 17
36	B-611	FP2-16-672	12716032	BORING LOGS – SHEET 11 OF 17
37	B-612	FP2-16-673	12716033	BORING LOGS – SHEET 12 OF 17
38	B-613	FP2-16-674	12716034	BORING LOGS – SHEET 13 OF 17
39	B-614	FP2-16-675	12416035	BORING LOGS – SHEET 14 OF 17
40	B-615	FP2-16-676	12716036	BORING LOGS – SHEET 15 OF 17
41	B-616	FP2-16-677	12716037	BORING LOGS – SHEET 16 OF 17
42	B-617	FP2-16-678	12716038	BORING LOGS – SHEET 17 OF 17
43	CD101	FP2-16-679	12716039	DEMOLITION PLAN – DRAINAGE – SHEET 1 OF 2
44	CD102	FP2-16-680	12716040	DEMOLITION PLAN – DRAINAGE – SHEET 2 OF 2
45	C-101	FP2-16-681	12716041	SOIL EROSION AND SEDIMENT CONTROL PLAN
46	C-102	FP2-16-682	12716042	DREDGING PLAN – SHEET 1 OF 2
47	C-103	FP2-16-683	12716043	DREDGING PLAN – SHEET 2 OF 2
48	C-104	FP2-16-684	12716044	STORM DRAINAGE PLAN – SHEET 1 OF 2
49	C-105	FP2-16-685	12716045	STORM DRAINAGE PLAN – SHEET 2 OF 2
50	C-106	FP2-16-686	12716046	PLAN OF FILL AREAS BEHIND BULKHEAD
51	C-107	FP2-16-687	12716047	FILL PART PLANS
52	C-108	FP2-16-688	12716248	SIGNAGE PLAN
53	C-109	FP2-16-689	12716049	STRIPING PLAN
54	C-301	FP2-16-690	12716050	UTILITY SECTIONS – SHEET 1 OF 2
55	C-302	FP2-16-691	12716051	UTILITY SECTIONS – SHEET 2 OF 2
56	C-303	FP2-16-692	12716052	DREDGING SECTIONS – SHEET 1 OF 4
57	C-304	FP2-16-693	12716053	DREDGING SECTIONS – SHEET 2 OF 4
58	C-305	FP2-16-694	12716054	DREDGING SECTIONS – SHEET 3 OF 4
59	C-306	FP2-16-695	12716055	DREDGING SECTIONS – SHEET 4 OF 4
60	C-501	FP2-16-696	12716056	SOIL EROSION AND SEDIMENT CONTROL DETAILS
61	C-502	FP2-16-697	12716057	DRAINAGE DETAILS
62	SD101	FP2-16-698	12716058	DEMOLITION PLAN – STRUCTURAL – SHEET 1 OF 2
63	SD102	FP2-16-699	12716059	DEMOLITION PLAN – STRUCTURAL – SHEET 2 OF 2
64	SD301	FP2-16-700	12716060	DEMOLITION SECTIONS
65	SD501	FP2-16-701	12716061	DEMOLITION DETAILS
66	S-101	FP2-16-702	12716062	PILE PLAN – SHEET 1 OF 3
67	S-102	FP2-16-703	12716063	PILE PLAN – SHEET 2 OF 3
68	S-103	FP2-16-704	12716064	PILE PLAN – SHEET 3 OF 3
69	S-104	FP2-16-705	12716065	BULKHEAD PLAN AND ELEVATION – SHEET 1 OF 3
70	S-105	FP2-16-706	12716066	BULKHEAD PLAN AND ELEVATION – SHEET 2 OF 3
71	S-106	FP2-16-707	12716067	BULKHEAD PLAN AND ELEVATION – SHEET 3 OF 3
72	S-107	FP2-16-708	12716068	BULKHEAD LAYOUT PLAN
73	S-108	FP2-16-709	12716069	DECK PLAN – SHEET 1 OF 4
74	S-109	FP2-16-710	12716070	DECK PLAN – SHEET 2 OF 4
75	S-110	FP2-16-711	12716071	DECK PLAN – SHEET 3 OF 4
76	S-111	FP2-16-712	12716072	DECK PLAN – SHEET 4 OF 4
77	S-112	FP2-16-713	12716073	DECK FRAMING PLAN – SHEET 1 OF 3
78	S-113	FP2-16-714	12716074	DECK FRAMING PLAN – SHEET 2 OF 3
79	S-114	FP2-16-715	12716075	DECK FRAMING PLAN – SHEET 3 OF 3
80	S-115	FP2-16-716	12716076	EXISTING DECK REPAIR PLAN – SHEET 1 OF 2
81	S-116	FP2-16-717	12716077	EXISTING DECK REPAIR PLAN – SHEET 2 OF 2
82	S-117	FP2-16-718	12716078	EXISTING BEAM REPAIR PLAN – SHEET 1 OF 4
83	S-118	FP2-16-719	12716079	EXISTING BEAM REPAIR PLAN – SHEET 2 OF 4
84	S-119	FP2-16-720	12716080	EXISTING BEAM REPAIR PLAN – SHEET 3 OF 4
85	S-120	FP2-16-721	12716081	EXISTING BEAM REPAIR PLAN – SHEET 4 OF 4
86	S-121	FP2-16-722	12716082	EXISTING PILE JACKET REPAIR PLAN – SHEET 1 OF 2
87	S-122	FP2-16-723	12716083	EXISTING PILE JACKET REPAIR PLAN – SHEET 2 OF 2
88	S-301	FP2-16-724	12716084	SCHEMATIC – BULKHEAD CONSTRUCTION STAGES
89	S-302	FP2-16-725	12716085	SCHEMATIC – ROCK ANCHOR TEST SUPPORT SYSTEM
90	S-303	FP2-16-726	12716086	BULKHEAD SHUTTER PANELS SECTIONS & DETAILS – SHEET 1 OF 2
91	S-304	FP2-16-727	12716087	BULKHEAD SHUTTER PANELS SECTIONS & DETAILS – SHEET 2 OF 2
92	S-305	FP2-16-728	12716088	BULKHEAD CONCRETE SECTIONS & DETAILS
93	S-306	FP2-16-729	12716089	BULKHEAD RETURN SECTION & DETAILS
94	S-307	FP2-16-730	12716090	BULKHEAD RETURN SECTION & DETAILS
95	S-308	FP2-16-731	12716091	SHEET PILE BULKHEAD SECTIONS
96	S-309	FP2-16-732	12716092	SHEET PILE BULKHEAD TERMINATION SECTIONS & DETAILS
97	S-310	FP2-16-733	12716093	TIMBER DECK SECTIONS & DETAILS
98	S-311	FP2-16-734	12716094	CONCRETE DECK SECTIONS & DETAILS
99	S-501	FP2-16-735	12716095	BULKHEAD WALE DETAILS – SHEET 1 OF 2
100	S-502	FP2-16-736	12716096	BULKHEAD WALE DETAILS – SHEET 2 OF 2
101	S-503	FP2-16-737	12716097	ROCK ANCHOR DETAILS
102	S-504	FP2-16-738	12716098	CLEAT & BOLLARD DETAILS – SHEET 1 OF 3
103	S-505	FP2-16-739	12716099	CLEAT & BOLLARD DETAILS – SHEET 2 OF 3
104	S-506	FP2-16-740	12716100	CLEAT & BOLLARD DETAILS – SHEET 3 OF 3
105	S-507	FP2-16-741	12716101	SUPPORT PILE CONNECTION DETAILS
106	S-508	FP2-16-742	12716102	LIVING BARGE BROW ANCHORAGE DETAILS
107	S-509	FP2-16-743	12716103	SERVICE BROW ANCHORAGE DETAILS
108	S-510	FP2-16-744	12716104	BROW ANCHORAGE DETAILS
109	S-511	FP2-16-745	12716105	SERVICE PLATFORM
110	S-512	FP2-16-746	12716106	EQUIPMENT PLATFORM DETAILS
111	S-513	FP2-16-747	12716107	SERVICE BOOM FOUNDATIONS
112	S-514	FP2-16-748	12716108	MISCELLANEOUS PLATFORM DETAILS
113	S-515	FP2-16-749	12716109	LADDER DETAILS
114	S-516	FP2-16-750	12716110	MISCELLANEOUS DETAILS
115	S-517	FP2-16-751	12716111	REPAIR DETAILS – SHEET 1 OF 2
116	S-518	FP2-16-752	12716112	REPAIR DETAILS – SHEET 2 OF 2
117	S-601	FP2-16-753	12716113	EXISTING DECK REPAIR SCHEDULES
118	S-602	FP2-16-754	12716114	EXISTING BEAM REPAIR SCHEDULE – SHEET 1 OF 5
119	S-603	FP2-16-755	12716115	EXISTING BEAM REPAIR SCHEDULE – SHEET 2 OF 5
120	S-604	FP2-16-756	12716116	EXISTING BEAM REPAIR SCHEDULE – SHEET 3 OF 5
121	S-605	FP2-16-757	12716117	EXISTING BEAM REPAIR SCHEDULE – SHEET 4 OF 5
122	S-606	FP2-16-758	12716118	EXISTING BEAM REPAIR SCHEDULE – SHEET 5 OF 5
123	S-607	FP2-16-759	12716119	EXISTING PILE JACKET REPAIR SCHEDULE
124	S-608	FP2-16-760	12716120	WALE & ANCHOR SCHEDULE
125	M-101	FP2-16-761	12716121	MECHANICAL PLAN – SHEET 1 OF 2
126	M-102	FP2-16-762	12716122	MECHANICAL PLAN – SHEET 2 OF 2
127	M-103	FP2-16-763	12716123	MECHANICAL PHASING PLAN – WHEELER PIPE
128	M-104	FP2-16-764	12716124	MECHANICAL PHASING PLAN – HIGH PRESSURE AIR – SHEET 1 OF 2
129	M-105	FP2-16-765	12716125	MECHANICAL PHASING PLAN – HIGH PRESSURE AIR – SHEET 2 OF 2
130	M-501	FP2-16-766	12716126	MECHANICAL DETAILS
131	E-101	FP2-16-767	12716127	ELECTRICAL PLAN – SHEET 1 OF 2
132	E-102	FP2-16-768	12716128	ELECTRICAL PLAN – SHEET 2 OF 2
133	E-103	FP2-16-769	12716129	SECURITY LIGHTING & POWER PLAN – SHEET 1 OF 2
134	E-104	FP2-16-770	12716130	SECURITY LIGHTING & POWER PLAN – SHEET 2 OF 2
135	E-105	FP2-16-771	12716131	FIBER OPTIC RING PLAN – SHEET 1 OF 2
136	E-106	FP2-16-772	12716132	FIBER OPTIC RING PLAN – SHEET 2 OF 2
137	E-107	FP2-16-773	12716133	TELEPHONE PLAN – SHEET 1 OF 2
138	E-108	FP2-16-774	12716134	TELEPHONE PLAN – SHEET 2 OF 2
139	E-301	FP2-16-775	12716135	ELECTRICAL SECTIONS
140	E-302	FP2-16-776	12716136	CATHODIC PROTECTION SECTIONS
141	E-501	FP2-16-777	12716137	CATHODIC PROTECTION DETAILS
142	E-502	FP2-16-778	12716138	ELECTRICAL DETAILS – SHEET 1 OF 2
143	E-503	FP2-16-779	12716139	ELECTRICAL DETAILS – SHEET 2 OF 2
144	E-601	FP2-16-780	12716140	ELECTRICAL SCHEDULES

SYM DESCRIPTION DATE APPR

STATE OF MAINE
PAUL F. HARRINGTON
13061
LICENSED
PROFESSIONAL ENGINEER
3-7-16
SEAL

MN FST
A JOINT VENTURE
A/E INFO

APPROVED
David Greenfield
FOR COMMANDER NAVFAC

ACTIVITY:
PER DOCUMENT FROM PNSY
CODE 980, KITTERY ME
SATISFACTORY TO DATE: 05/09/16

DES CHG | DRW CHG | CHK DWH
PM/DM: NATHAN LIBBY
BRANCH MANAGER: NATHAN MAHER
FEAD/PM&E: AMIN BAHROUR
FIRE PROTECTION: N/A

DEPARTMENT OF THE NAVY
NAVAL FACILITIES ENGINEERING COMMAND
NAVAL FACILITIES ENGINEERING COMMAND ~ MID-ATLANTIC
PUBLIC WORKS DEPARTMENT – MAINE
NAVAL SHIPYARD – PORTSMOUTH, NH
PORTSMOUTH NAVAL SHIPYARD
KITTERY, MAINE

STRUCTURAL REPAIRS
AT BERTHS 11A, 11B AND 11C

DRAWING LIST

EPROJECT NO.: 1356489
CONSTR. CONTR. NO.
N40085-XX-C-XXXX
NAVFAC DRAWING NO.
12715998
SHEET 2 OF 144
G-002 | FP2-16-638

DRAWFORM REVISION: 10 OCTOBER 2014

FILE NAME: S:\1794\Active\179410203\r\TP-104A PNSY Lifting Study\TP-104A PNSY Lifting Study\02 CADD\01 General\FP2-16-638.dwg LAYOUT NAME: DRAWING LIST PLOTTED: Friday, May 13, 2016 – 2:20pm USER: cgoodridge

GENERAL NOTES:

1. THE CONTRACTOR IS ADVISED THAT THE DRAWINGS AND SPECIFICATIONS FORM A PART OF THE CONTRACT DOCUMENTS. ALL WORK SHALL BE PERFORMED IN ACCORDANCE WITH THE CONTRACT DOCUMENTS. THE CONTRACTOR SHALL KEEP A COPY OF THE DRAWINGS AND SPECIFICATIONS ONSITE AT ALL TIMES DURING THE PROJECT.

2. EXISTING CONDITIONS DRAWINGS ARE INTENDED TO PROVIDE GENERAL OVERVIEW OF STRUCTURES BUT DO NOT INCLUDE ALL APPURTENANCES AND CONDITIONS.

3. ALL DIMENSIONS, ELEVATIONS & CONDITIONS SHALL BE VERIFIED IN THE FIELD. ANY DISCREPANCIES SHALL BE BROUGHT TO THE ATTENTION OF THE CONTRACTING OFFICER BEFORE ORDERING MATERIALS AND PROCEEDING WITH THE AFFECTED PART OF THE WORK.

4. PROVIDE AND MAINTAIN HORIZONTAL AND VERTICAL SURVEY CONTROLS IN ACCORDANCE WITH THE PROJECT SURVEY CONTROLS, SEE DWG V–001 THROUGH DWG V–105. HORIZONTAL CONTROL IS BASED ON THE MAINE STATE PLANE COORDINATE SYSTEM. VERTICAL CONTROL IS BASED ON THE NORTH ATLANTIC VERTICAL DATUM OF 1988 (NAVD 88).

5. THE EXACT SIZE & LOCATION OF ALL EXISTING UTILITIES SHALL BE FIELD VERIFIED BY THE CONTRACTOR PRIOR TO START OF CONSTRUCTION. CONTRACTOR SHALL TAKE CARE TO PROTECT UTILITIES IN THE WORK AREA AND ALL CONSTRUCTION SHALL BE COORDINATED WITH THE CONTRACTING OFFICER.

6. THE CONTRACTOR SHALL VERIFY THE LOCATION OF UNDERGROUND UTILITIES WITHIN THE LIMITS OF THE WORK PRIOR TO COMMENCING ANY EXCAVATION OR GROUND PENETRATING WORK. THE CONTRACTOR SHALL NOTIFY "DIG SAFE" (1–888–344–7233) AT LEAST 14 CALENDAR DAYS PRIOR TO COMMENCEMENT OF THE EXCAVATION OR GROUND PENETRATING ACTIVITY. THE CONTRACTOR / EXCAVATOR SHALL FULLY COMPLY WITH THE STATE OF MAINE "DIG SAFE" LAW (TITLE 23. MRSA 33 60–A).

7. TAKE ALL NECESSARY PRECAUTIONS TO PROTECT EXISTING UTILITIES AND MAINTAIN UNINTERRUPTED SERVICE. ANY DAMAGE INCURRED SHALL BE REPAIRED IMMEDIATELY TO THE SATISFACTION OF THE CONTRACTING OFFICER AT THE CONTRACTORS EXPENSE. NOTIFY THE CONTRACTING OFFICER A MINIMUM OF 15 DAYS IN ADVANCE OF ANY SCHEDULED OUTAGES.

8. IT IS THE CONTRACTOR'S SOLE RESPONSIBILITY TO DETERMINE ERECTION PROCEDURES AND SEQUENCE TO ENSURE THE SAFETY OF THE FACILITIES AND THEIR COMPONENTS DURING DEMOLITION AND ERECTION UNLESS OTHERWISE DIRECTED. THIS INCLUDES THE ADDITION OF NECESSARY SHORING, SHEETING, TEMPORARY BRACING, GUYS OR TIEDOWNS. SUCH MATERIAL SHALL REMAIN THE PROPERTY OF THE CONTRACTOR AFTER COMPLETION OF THE PROJECT.

9. METHODS OF DEMOLITION, CONSTRUCTION, AND ERECTION ARE THE CONTRACTOR'S RESPONSIBILITY UNLESS OTHERWISE SPECIFIED.

10. DIMENSIONS AND DETAILS OF THE EXISTING CONSTRUCTION ARE FROM CONSTRUCTION DRAWINGS AND UTILITY LOCATION MAPS FURNISHED BY THE GOVERNMENT AND FROM FIELD SURVEYS. ALL DIMENSIONS AND DETAILS OF THE EXISTING CONSTRUCTION SHALL BE CHECKED AND VERIFIED IN THE FIELD BY THE CONTRACTOR PRIOR TO COMMENCING CONSTRUCTION.

11. IT IS THE CONTRACTOR'S RESPONSIBILITY TO PROVIDE AND MAINTAIN ENVIRONMENTAL CONTROLS AS REQUIRED BY FEDERAL AND STATE REGULATIONS AND PERMITS. ENVIRONMENTAL CONTROLS SHALL INCLUDE BUT NOT BE LIMITED TO EROSION AND SEDIMENT CONTROL & DUST CONTROL.

12. THE GOVERNMENT MAY CHARGE TO THE CONTRACTOR ANY ADDITIONAL COST OF REINSPECTION OR RETEST WHEN PRIOR REJECTION MAKES REINSPECTION OR RETEST NECESSARY.

13. CONDITIONS SHOWN MAY NOT REFLECT WORK DONE BY OTHERS BETWEEN THE TIME OF CONTRACT DOCUMENTATION AND CONTRACT AWARD.

DEMOLITION NOTES:

1. THE CONTRACTOR SHALL PROVIDE CONTROL MEASURES AS REQUIRED BY ENVIRONMENTAL REGULATIONS AND AS REQUIRED TO PREVENT DEBRIS CONTAMINANTS (SOLID, LIQUID OR DISSOLVED) FROM ENTERING THE RIVER. UNDERWATER INSPECTIONS MAY BE CONDUCTED BY THE CONTRACTING OFFICER TO ENSURE THE CONTRACTOR HAS REMOVED ALL DEMOLITION AND CONSTRUCTION DEBRIS FROM THE MUDLINE.

2. ALL MATERIAL DEMOLISHED AND NOT REUSED OR SALVAGED TO THE GOVERNMENT SHALL BECOME THE PROPERTY OF THE CONTRACTOR AND SHALL BE REMOVED DAILY FROM THE GOVERNMENT'S PROPERTY. REMOVED MATERIAL SHALL BE DISPOSED OF IN ACCORDANCE WITH ALL LOCAL, STATE AND FEDERAL LAWS.

3. CONTRACTOR SHALL PROVIDE CONNEX BOXES TO PROTECT ALL SALVAGED APPURTENANCES PRIOR TO REINSTALLATION.

ENVIRONMENTAL CONTROL NOTES:

1. ENVIRONMENTAL CONTROLS SHALL CONFORM TO ALL STATE, LOCAL AND FEDERAL REGULATIONS AND PERMITS; AS WELL AS SPECIFICATION SECTION 01 57 19.00 22 TEMPORARY ENVIRONMENTAL CONTROLS.

2. PROVIDE AND MAINTAIN CONTROL MEASURES TO PREVENT DEMOLITION MATERIAL, DEBRIS, WELD SLAG, AND WASTE WATERS FROM DEMOLITION AND CONSTRUCTION WORK FROM ENTERING THE STORM WATER DRAINS AND THE RIVER. IMMEDIATELY REMOVE AND CLEAN FROM THE STORM DRAINS AND RIVER ANY DEMOLITION MATERIAL AND CONSTRUCTION DEBRIS IN THE EVENT THAT SAID MATERIAL OR DEBRIS ENTERS THE WATER.

3. ALL WORK SHALL BE COMPLETED IN ACCORDANCE WITH THE STATE OF MAINE NATURAL RESOURCES PROTECTION ACT PERMIT AND WITH THE STATE OF MAINE SITE LOCATION OF DEVELOPMENT ACT APPLICATION FILED WITH MAINE DEP.

4. ALL WORK SHALL BE COMPLETED IN ACCORDANCE WITH THE US ARMY CORPS OF ENGINEERS PERMIT.

5. ALL WORK SHALL BE COMPLETED IN ACCORDANCE WITH THE NATURAL COMLIANCE REQUIREMENTS INCLUDING MARINE MAMMAL MONITORING AND LOBSSTER MITIGATION AS FOUND IN THE APPEXDIX TO THE SPECIFICATIONS.

6. THE CONTRACTOR SHALL ENSURE A COPY OF ALL PERMITS ARE MAINTAINED AT THE PROJECT SITE & THAT ALL PERSONNEL, INCLUDING SUBCONTRACTORS, ARE FULLY AWARE OF THE TERMS AND CONDITIONS OF THE PERMITS. PERMITS SHALL BE MADE PART OF ANY SUB–CONTRACTS ENTERED INTO BY THE CONTRACTOR FOR WORK IN JURISDICTIONAL AREAS AT THE SITE AND AUTHORIZED BY THE PERMITS.

7. FOR ITEMS OF WORK THAT REQUIRE DEWATERING, THE CONTRACTOR SHALL PROVIDE (DESIGN, INSTALL AND MAINTAIN) A DEWATERING SYSTEM. THE CONTRACTOR'S DEWATERING PLAN SHALL BE SUBMITTED TO AND APPROVED BY THE GOVERNMENT PRIOR TO BEGINNING DEWATERING WORK. THE CONTRACTOR SHALL INCLUDE ALL COSTS ASSOCIATED WITH ALL DEWATERING EFFORTS REQUIRED TO COMPLETE THE WORK. FAILURE OF THE CONTRACTOR TO PLAN FOR GROUND WATER AND SEA WATER CONDITIONS SHALL NOT BE THE BASIS FOR ANY CLAIM NOR EQUITABLE PRICE OR CONTRACT TIME ADJUSTMENTS. ALL DEWATERING SYSTEM COMPONENTS (INCLUDING TANKS, PUMPS, HOSES, FILTERS, ETC) AND STORAGE SHALL BE LOCATED WITHIN THE LIMITS OF WORK.

CONCRETE:

1. MINIMUM 28–DAY COMPRESSIVE STRENGTH FOR CAST–IN–PLACE CONCRETE, f'c = 4000 PSI UNLESS OTHERWISE NOTED.

2. MINIMUM 28–DAY COMPRESSIVE STRENGTH FOR PRECAST CONCRETE:
   f'c = 5000 PSI

3. CHAMFER EXPOSED CORNERS 3/4" UNLESS OTHERWISE NOTED.

4. FOR CAST–IN–PLACE CONCRETE, CLEAR CONCRETE COVER SHALL BE 3", UNLESS OTHERWISE NOTED.

5. CONCRETE PLACED BELOW WATER SHALL BE PLACED BY THE TREMIE METHOD.

6. CRACKS LARGER THAN 0.02 INCHES IN EXPOSED CONCRETE SURFACES, FOR CONCRETE PLACED UNDER THIS CONTRACT, SHALL BE CONSIDERED TO BE DEFECTS AND SHALL BE REPAIRED BY THE CONTRACTOR AT NO ADDITIONAL COST.

REINFORCEMENT:

1. REINFORCING STEEL: ASTM A615 GRADE 60, DEFORMED, PREFABRICATED, EPOXY COATED ASTM A934, UNLESS OTHERWISE NOTED.

2. SPLICING OF REINFORCING STEEL OVER 20 FEET IN LENGTH IS PERMITTED. STAGGER SPLICES ONE SPLICE LENGTH MINIMUM WHERE POSSIBLE. PROVIDE MINIMUM SPLICE LENGTHS IN ACCORDANCE WITH THE FOLLOWING TABLE, UNLESS NOTED OTHERWISE. TABULATED VALUES SHALL BE MULTIPLIED BY 1.63 WHEN BAR SPACING IS LESS THAN 6 BAR DIAMETERS OR COVER IS LESS THAT 3 BAR DIAMETERS (1.32 FOR TOP BARS).

BAR SIZE	#4	#5	#6	#7	#8	#9	#10
TOP BAR * (IN)	26	33	35	48	63	80	101
BOTTOM BAR (IN)	19	23	25	34	45	57	72

* TOP BARS ARE HORIZONTAL BARS PLACED SO THAT MORE THAN 12 INCHES OF CONCRETE IS CAST BELOW THE REINFORCEMENT.

3. MECHANICAL COUPLERS SHALL BE DESIGNED FOR:
   A. 125 PERCENT OF YIELD STRENGTH OF REINFORCING STEEL FY $\leq$60 KSI

4. ALL INSTALLED REINFORCING STEEL AND SUPPORTS TO REMAIN PERMANENTLY EMBEDDED IN THE CONCRETE SHALL BE PREFABRICATED EPOXY COATED, ASTM A934.

5. ALL HOOKS SHALL BE STANDARD HOOKS UNLESS NOTED OTHERWISE.

STRUCTURAL STEEL AND MISC FABRICATIONS:

1. STEEL SHAPES AND PLATES SHALL BE ASTM A572, GRADE 50

2. PIPES AND SLEEVES SHALL BE ASTM A53, GRADE B

3. HOLLOW STRUCTURAL SECTIONS, HSS, SHALL CONFORM TO THE REQUIREMENTS OF ASTM A500, GRADE B.

4. ALL BOLTS AND NUTS SHALL CONFORM TO ASTM A307, UNLESS NOTED OTHERWISE. SET ANCHOR BOLTS BY TEMPLATE ONLY.

5. ALL MISCELLANEOUS STEEL, INCLUDING ALL FASTENERS, UNLESS NOTED OTHERWISE, SHALL BE HOT–DIP GALVANIZED. GALVANIZE ITEMS AFTER FABRICATION. GALVANIZING DAMAGED ACCIDENTALLY OR DUE TO FIELD WELDING SHALL BE REPAIRED WITH A FIELD APPLIED GALVANIZING COMPOUND.

6. WELDING ELECTRODES: E70XX, LOW HYDROGEN.

7. ALL COATING FOR STEEL (INCLUDING EXISTING MEMBERS) IMPACTED BY FIELD CONNECTIONS SHALL BE CLEANED AND COATED.

STEEL SHEET PILES:

1. ALL STEEL SHEET PILES SHALL CONFORM TO ASTM A572, GRADE 50.

2. SHEET PILES SHALL BE COATED WITH COAL TAR EPOXY FULL LENGTH ON BOTH SIDES.

STEEL HP AND W SECTION PILES:

1. STEEL HP SUPPORT PILES, STEEL WALES AND W SECTION KING PILES SHALL CONFORM TO ASTM A572, GRADE 50.

2. PILE SPLICES SHALL CONFORM TO ASTM A572, GRADE 50.

3. PILE POINTS FOR HP SUPPORT PILES SHALL CONFORM TO ASTM A27.

4. PILES SHALL BE COATED WITH COAL TAR EPOXY.

5. ALL WELDS SHALL BE 5/16" FILLET WELDS ALL AROUND UNLESS NOTED OTHERWISE.

6. ALL WELDS SHALL BE ALL AROUND TO SEAL THE INTERFACE BETWEEN THE CONNECTED COMPONENTS UNLESS NOTED OTHERWISE.

TIMBER NOTES:

1. ALL TIMBER SHALL BE TREATED SOUTHERN YELLOW PINE AS LISTED BELOW:

ITEM	ACQ	CCA	DRESSING	GRADE
DECK PLANKS	0.6 PCF	–	S4S	SYP No 1
CURBS & ABOVE DECK MEMBERS	0.6 PCF	–	S4S	SYP No 1
STRINGERS & BELOW DECK BLOCKING	–	2.5 PCF	S2E	SYP No 1 DENSE

2. PRESSURE TREATMENT SHALL BE IN ACCORDANCE WITH AWPA STANDARD P5. TREATMENT SHALL BE BY THE FULL CELL PROCESS IN ACCORDANCE WITH AWPA STANDARDS U1–10 AND T1–10.

3. TIMBER SHALL BE INSPECTED BY AN INDEPENDENT COMMERCIAL LABORATORY PRIOR TO DELIVERY TO THE SITE.

TIMBER HARDWARE NOTES:

1. ALL HARDWARE AND FASTENERS SHALL BE HOT DIP GALVANIZED, UNLESS NOTED OTHERWISE.

2. ALL CONNECTION PLATES AND ANGLES SHALL CONFORM TO ASTM A36 AND BE HOT DIP GALVANIZED, UNLESS NOTED OTHERWISE.

3. ALL GALVANIZED BOLTS AND RELATED HARDWARE SHALL CONFORM TO ASTM A307.

ROCK ANCHOR NOTES:

1. SEE SHEET S–503

SYM	DESCRIPTION	DATE	APPR

NAVFAC

STATE OF MAINE
PAUL F. HARRINGTON
13061
LICENSED
PROFESSIONAL ENGINEER
3-7-16
SEAL

MN FST
A JOINT VENTURE
A/E INFO

APPROVED
David Greenfield
FOR COMMANDER NAVFAC

ACTIVITY:
PER DOCUMENT FROM PNSY CODE 980, KITTERY ME
SATISFACTORY TO DATE: 05/09/16

DES CHG | DRW CHG | CHK DWH
PM/DM: NATHAN LIBBY
BRANCH MANAGER: NATHAN MAHER
FEAD/PM&E: AMIN BAHROUR
FIRE PROTECTION: N/A

DEPARTMENT OF THE NAVY
NAVAL FACILITIES ENGINEERING COMMAND
NAVAL FACILITIES ENGINEERING COMMAND ~ MID-ATLANTIC
PUBLIC WORKS DEPARTMENT – MAINE
NAVAL SHIPYARD – PORTSMOUTH, NH
PORTSMOUTH NAVAL SHIPYARD
KITTERY, MAINE

STRUCTURAL REPAIRS
AT BERTHS 11A, 11B AND 11C

GENERAL NOTES

EPROJECT NO.: 1356489
CONSTR. CONTR. NO. N40085–XX–C–XXXX
NAVFAC DRAWING NO. 12715999
SHEET 3 OF 144

G-003 | FP2-16-639

DRAWFORM REVISION: 10 OCTOBER 2014

FILE NAME: S:\1794\Active\179410203\r\TP-104A PNSY Lifting Study\TP-104A PNSY Lifting Study\02 CADD\01 General\FP2-16-640.dwg LAYOUT NAME: GENERAL NOTES PLOTTED: Friday, May 13, 2016 – 2:20pm USER: cgoodridge

ELEVATION REFERENCE TABLE

REFERENCE	LOCAL TIDAL DATUM	PNSY DATUM	NGVD29	NAVD88
FEMA FLOOD ZONE A2 (EL 9)	12.856	105.012	9.000	8.233
HIGHEST OBSERVED WATER LEVEL (2/19/1972)	12.339	104.495	8.483	7.716
MEAN HIGHER HIGH WATER (MHHW)	8.839	100.995	4.983	4.216
MEAN HIGH WATER (MHW)	8.428	100.584	4.572	3.805
NORTH AMERICA VERTICAL DATUM (NAVD88)	4.623	96.779	0.767	0.000
MEAN SEA LEVEL (MSL)	4.432	96.588	0.576	−0.191
MEAN TIDE LEVEL (MTL)	4.373	96.529	0.517	−0.250
NATIONAL GEODETIC VERTICAL DATUM (NGV29)	3.856	96.012	0.000	−0.767
MEAN LOW WATER (MLW)	0.322	92.478	−3.534	−4.301
MEAN LOWER LOW WATER (MLLW)	0.000	92.156	−3.856	−4.623
LOWEST OBSERVED WATER LEVEL (2/10/1977)	−3.261	88.895	−7.117	−7.884

THE LOCAL TIDAL DATUM INFORMATION AND THE RELATIONSHIP BETWEEN LOCAL TIDE AND NAVD88 IS BASED ON DATA PUBLISHED BY THE U.S. DEPARTMENT OF COMMERCE NATIONAL OCEANIC AND ATMOSPHERIC ADMINISTRATION NATIONAL OCEAN SERVICE FOR STATION "SEAVEY ISLAND, PORTSMOUTH HARBOR", STATION ID: 8419870, TIDAL EPOCH 1983–2001. THE RELATIONSHIP BETWEEN THE PORTSMOUTH NAVAL SHIPYARD DATUM AND NGVD29/NAVD88 IS BASED ON A REPORT ENTITLED "SURVEY CONTROL REPORT, PORTSMOUTH NAVAL SHIPYARD, U.S. NAVAL ACTIVITIES, SEAVEY ISLAND; KITTERY, MAINE", PREPARED BY CIVIL CONSULTANTS, DATED FEBRUARY 22, 2002.

ABBREVIATIONS:

ACQ	ALKALINE COPPER QUAT
ADD'L	ADDITIONAL
API	AMERICAN PETROLEUM INSTITUTE
APPROX	APPROXIMATE
ASTM	AMERICAN SOCIETY FOR TESTING AND MATERIALS
AWPA	AMERICAN WOOD PROTECTION ASSOCIATION
BIT	BITUMINOUS
CB	CATCH BASIN
CCA	CHROMATED COPPER ARSENATE
℄	CENTER LINE
CLF	CHAIN LINK FENCE
CLR, OR CL	CLEAR
CONC	CONCRETE
CONN	CONNECTION
CONT	CONTINUOUS
C'SINK	COUNTERSINK
CTE	CONNECT TO EXISTING
DI	DUCTILE IRON
DIA OR ø	DIAMETER
DIP	DUCTILE IRON PIPE
DMH	DRAIN MANHOLE
E	EAST
EL OR ELEV	ELEVATION
ELEC	ELECTRIC
EXST	EXISTING
FT	FOOT
GV	GATE VALVE
HDG	HOT DIP GALVANIZED
IBC	INTERNATIONAL BUILDING CODE
INV	INVERT
LB	POUND
LBS	POUNDS
LF	LINEAR FEET
LG	LONG
MACH	MACHINE
MIN	MINIMUM
MAX	MAXIMUM
MHW	MEAN HIGH WATER
MJ	MECHANICAL JOINT
MLLW	MEAN LOWER LOW WATER
MLW	MEAN LOW WATER
MPH	MILES PER HOUR
N	NORTH
No	NUMBER
Nos	NUMBERS
OC	ON CENTER
PCF	POUNDS PER CUBIC FOOT
PL	PLATE
PSF	POUNDS PER SQUARE FOOT
PSI	POUNDS PER SQUARE INCH
PTL	PRESSURE TREATED LUMBER
RCP	REINFORCED CONCRETE PIPE
RP BFP	REDUCED PRESSURE BACKFLOW PREVENTER
SCHED	SCHEDULE
SPCS	SPACES
STA	STATION
SST	STAINLESS STEEL
SYP	SOUTHERN YELLOW PINE
S	SOUTH
SQ	SQUARE
TEL	TELEPHONE
TYP	TYPICAL
W	WEST

LEGEND:

- (1) DEMOLITION / REMOVAL KEYNOTE NUMBER
- [1] NEW WORK KEYNOTE NUMBER
- ⟨1⟩ SPECIALITY KEYNOTE
- EXISTING FEATURES SHOWN THUS
- FEATURES TO BE PROVIDED UNDER THIS CONTRACT SHOWN THUS

APPR	DATE	DESCRIPTION	STM

NAVFAC

STATE OF MAINE
PAUL F. HARRINGTON
13061
LICENSED
PROFESSIONAL ENGINEER
3-7-16
SEAL

MNFST
A JOINT VENTURE
A/E INFO

APPROVED
David W. Grunfeld
FOR COMMANDER NAVFAC

ACTIVITY:
PER DOCUMENT FROM PNSY
CODE 980, KITTERY ME

SATISFACTORY TO DATE: 05/09/16

DES: DWH | DRW: CHG | CHK: PFH

PM/DM: NATHAN LIBBY

BRANCH MANAGER: NATHAN MAHER

LEAD/PM&E: AMIN BAHROUR

FIRE PROTECTION: N/A

DEPARTMENT OF THE NAVY
NAVAL FACILITIES ENGINEERING COMMAND
PUBLIC WORKS DEPARTMENT - MAINE
PORTSMOUTH NAVAL SHIPYARD

NAVAL FACILITIES ENGINEERING COMMAND ~ MID-ATLANTIC
NAVAL SHIPYARD - PORTSMOUTH, NH

KITTERY, MAINE

STRUCTURAL REPAIRS
AT BERTHS 11A, 11B AND 11C

ABBREVIATIONS & LEGEND

EPROJECT NO.: 1356489

CONSTR. CONTR. NO.
N40085-XX-C-XXXX

NAVFAC DRAWING NO.
12716000

SHEET 4 OF 144

G-004 | FP2-16-640

DRAWFORM REVISION: 10 OCTOBER 2014

FILE NAME: S:\1794\Active\1794102003\YP-104A PNSY Lifting Study\YP-104A PNSY Lifting Study\02 CADD\01 General\FP2-16-640.dwg LAYOUT NAME: ABBREVIATIONS & LEGEND PLOTTED: Friday, May 13, 2016 - 2:21pm USER: cgoodridge

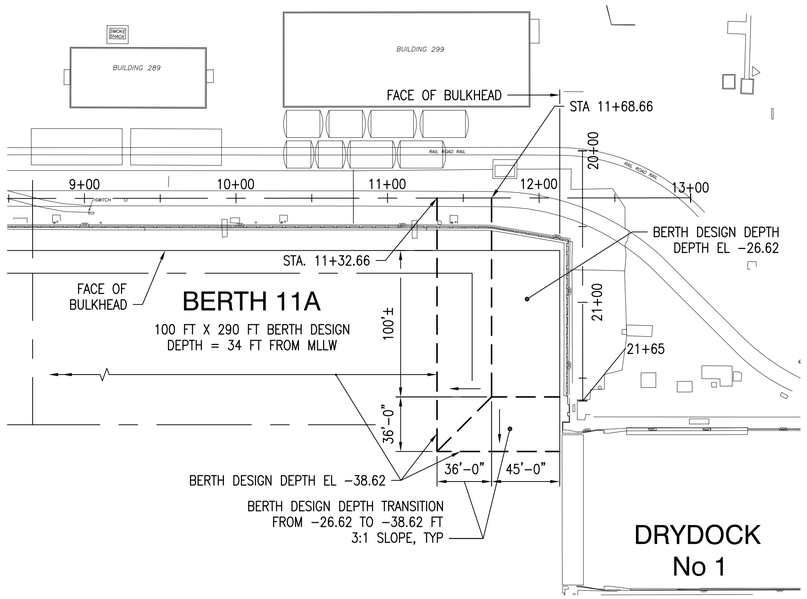

BERTH 11A - BERTH DESIGN DEPTH PART PLAN

SCALE: 1" = 50'

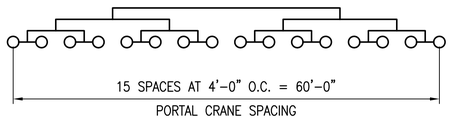

PORTAL CRANE WHEEL SPACING DETAIL

NOT TO SCALE

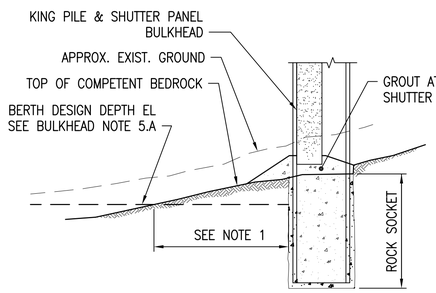

NOTE:

1. THE KING PILE IS SUPPORTED AT THE BASE BY THE ROCK SOCKET. THE REQUIRED ROCK SOCKET DEPTH IS BASED ON A MINIMUM EMBEDMENT BEYOND THE TOP OF THE COMPETENT BEDROCK ENCOUNTERED AT EACH KING PILE, WHICH INCLUDES COMPETENT ROCK ABOVE THE BERTH DESIGN DEPTH ELEVATION. THE DESIGN ASSUMES THAT ANY FUTURE DREDGING PROJECT WILL NOT REMOVE OR DISTURB THE BEDROCK IN FRONT OF THE BULKHEAD.

DETAIL W/BEDROCK HIGHER THAN DREDGE DEPTH

NOT TO SCALE

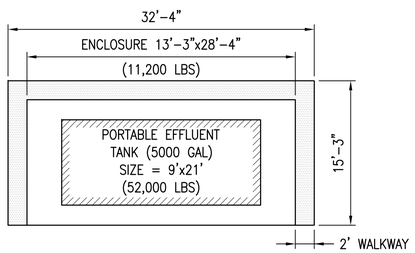

SERVICE PLATFORM PLAN

NOT TO SCALE

DESIGN LOADS:

BULKHEAD

1. LATERAL LOADS:
   - A. STATIC EARTH (SEE PRESSURE DIAGRAMS SEE SHEET G−006)
   - B. TIDAL LAG = 4 FEET
   - C. SEISMIC..... PER IBC 2012
     - IMPORTANCE FACTOR..... 1.0
     - SITE CLASS..... D
2. VERTICAL LOADS:
   - A. DECK BETWEEN EXIST WHARF AND BULKHEAD
     - DEAD LOAD..... 0.13 K/LF
     - LIVE LOAD..... 1.60 K/LF
   - B. FUTURE UTILITY TUNNEL BETWEEN EXIST WHARF & BULKHEAD
     - DEAD LOAD..... 8.63 K/LF
     - LIVE LOAD (INCL UTILITIES)..... 2.17 K/LF
1. MOORING LOADS:
   - A. MOORING BOLLARD..... 100,000 LBS
   - C. CLEAT..... 40,000 LBS
4. BERTHING LOADS:
   - A. 1,000 LBS PER LINEAR FOOT OF BERTH
5. BERTH DESIGN DEPTHS
   - A. THE BERTH DESIGN DEPTHS ARE PROVIDED TO DOCUMENT THE BASIS OF DESIGN FOR THE BULKHEAD AND ARE PROVIDED FOR INFORMATION ONLY. THE DESIGN ELEVATIONS SHOWN, WHICH INCLUDE A 2 FOOT ALLOWANCE FOR OVERDREDGING, ARE BASED ON THE ACOE PERMIT NO. NAE−2013−00743 ISSUED 05JUN2013.
   - B. BERTH 11A ELEVATION −38.62 (INCL 2' ALLOWANCE FOR OVERDREDGING) EXCEPT AT EAST END. SEE BERTH 11A BERTH DESIGN DEPTH PART PLAN THIS SHEET FOR EAST END DESIGN DEPTHS.
   - C. BERTH 11B & 11C ELEVATION −44.62 (INCL 2' ALLOWANCE FOR OVERDREDGING)
   - D. SEE DETAIL THIS SHEET FOR AREAS WITH BEDROCK HIGHER THAN DESIGN DREDGE DEPTHS.

ELEVATED DECK (BETWEEN EXISTING WHARF & BULKHEAD)

1. LIVE LOADS:
   - A. UNIFORM LIVE LOAD..... 250 PSF
   - B. CONCENTRATED EQUIPMENT LOAD..... 3,000 LBS
   - C. EQUIPMENT PLATFORM..... 500 PSF
2. SERVICE PLATFORM TOTAL LIVE LOAD..... 66,200 LBS
   - A. PORTABLE EFFLUENT TANK (5000 GAL)..... 52,000 LBS
   - B. ENCLOSURE..... 11,200 LBS
   - C. MISCELLANEOUS EQUIPMENT/PERSONNEL..... 3,000 LBS
3. FUTURE UTILITY TUNNEL:
   - A. UNIFORM LIVE LOAD:
     - a. AT DECK ELEVATION..... 250 PSF
     - b. TUNNEL FLOOR..... 40 PSF
   - B. DEAD LOAD ALLOWANCE..... 8.63 K/LF
4. SERVICE BOOM FOUNDATIONS ASSUMPTIONS:
   - A. ESTIMATED WEIGHT OF BOOM..... 13,000 LBS
   - B. CABLE WEIGHT (ASSUME 4 CABLES)..... 28.4 PLF
   - C. JOY PLUG WEIGHT (ASSUME 4 PLUGS)..... 1200 LBS
   - D. UNIFORM LIVE LOAD..... 35 PLF ON BOOM
   - E. SNOW & ICE LOADING..... 50 PSF
5. EQUIPMENT PLATFORM
   - A. UNIFORM LIVE LOAD..... 500 PSF

EXISTING WHARF

1. UNIFORM LIVE LOAD..... 500 PSF
2. TRUCK LOAD..... AASHTO HS20
3. PORTAL CRANE LOADS:
   - A. WHEEL LOADS..... 78 KIPS PER WHEEL
   - B. IMPACT (BEAMS AND PILE CAPS ONLY)..... 25%
   - C. WHEEL LOADS IN TEST AREA..... 91 KIPS PER WHEEL (INCLUDES 25% IMPACT)
     NOTE: THE DESIGNATED CRANE TEST AREA ON BERTH 11 IS AT BERTH 11A FROM BENT J TO BENT W.
   - D. WHEEL SPACING (SEE DETAIL THIS SHEET)
4. WIND ON CRANE
   - A. WITH CRANE OPERATING..... 45 MPH
   - B. WITH NO CRANE LIFTING LOADS..... 70 MPH

APPR	DATE	DESCRIPTION	NO.

NAVFAC

COMMONWEALTH OF MASSACHUSETTS
DAVID J. MELO
CIVIL
No. 48692
REGISTERED PROFESSIONAL ENGINEER
3/7/16
SEAL

MNFST
A JOINT VENTURE
A/E INFO

APPROVED (Signature)
David W. Grunfeld
FOR COMMANDER NAVFAC

ACTIVITY:
PER DOCUMENT FROM PNSY
CODE 980, KITTERY ME

SATISFACTORY TO DATE: 05/09/16

DES: DWH | DRW: CHG | CHK: PFH

PM/DM: NATHAN LIBBY
BRANCH MANAGER: NATHAN MAHER
FEAD/PM&E: AMN BAHROUR
FIRE PROTECTION: N/A

DEPARTMENT OF THE NAVY
NAVAL FACILITIES ENGINEERING COMMAND
PUBLIC WORKS DEPARTMENT − MAINE
PORTSMOUTH NAVAL SHIPYARD

NAVAL FACILITIES ENGINEERING COMMAND ~ MID-ATLANTIC
NAVAL SHIPYARD ~ PORTSMOUTH, NH

KITTERY, MAINE

STRUCTURAL REPAIRS
AT BERTHS 11A, 11B AND 11C

DESIGN DATA − SHEET 1 OF 2

EPROJECT NO.: 1356489

CONSTR. CONTR. NO.
N40085−XX−C−XXXX

NAVFAC DRAWING NO.
12716001

SHEET 5 OF 144

G-005 | FP2-16-641

DRAWFORM REVISION: 10 OCTOBER 2014

FILE NAME: S:\1794\Active\179410203\VTP−104A PNSY Lifting Study\VTP−104A PNSY Lifting Study\02 CADD\01 General\FP2−16−642.dwg LAYOUT NAME: DESIGN DATA − SHEET 1 OF 2 PLOTTED: Friday, May 13, 2016 − 2:21pm USER: cgoodridge

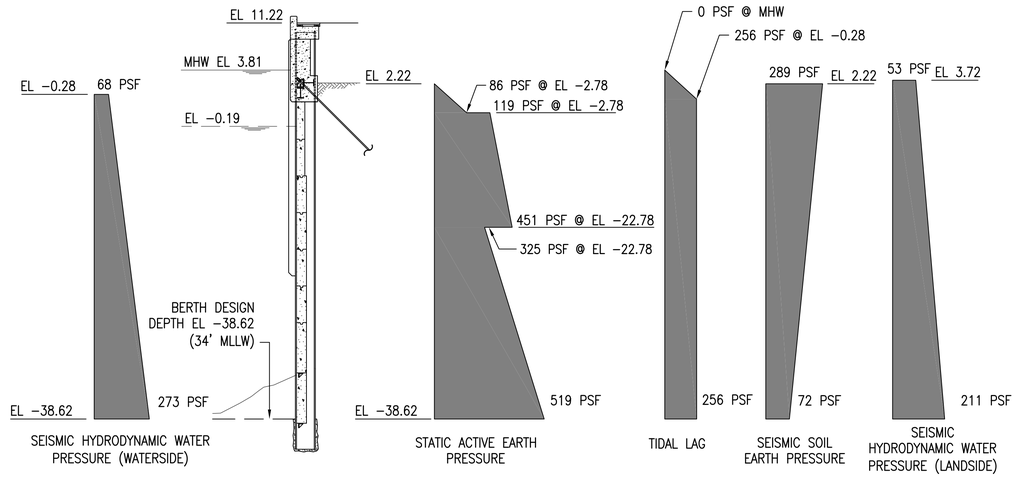

DESIGN PRESSURE DIAGRAM A

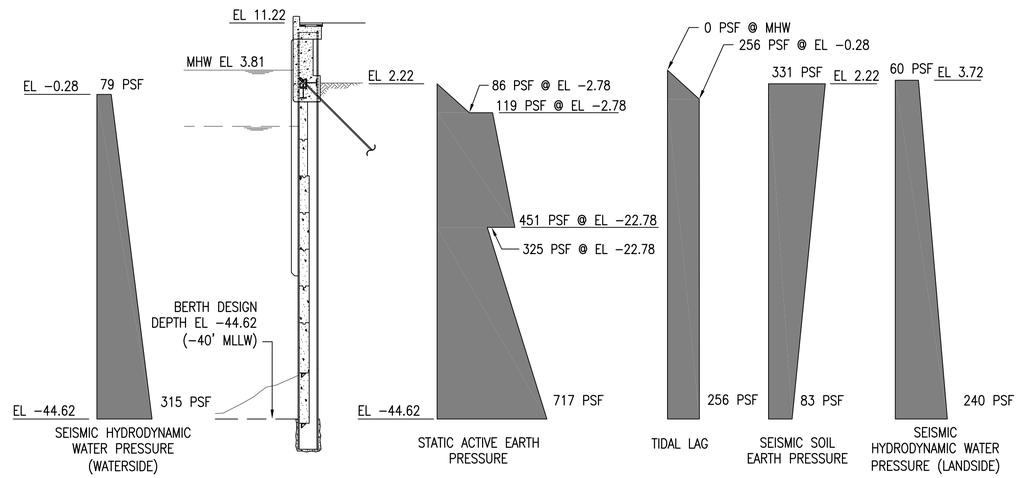

DESIGN PRESSURE DIAGRAM B

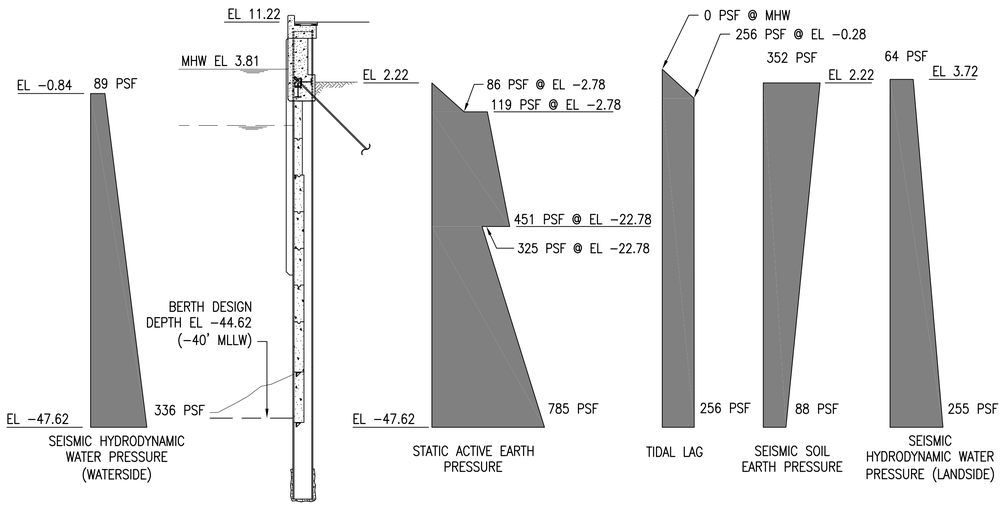

DESIGN PRESSURE DIAGRAM C

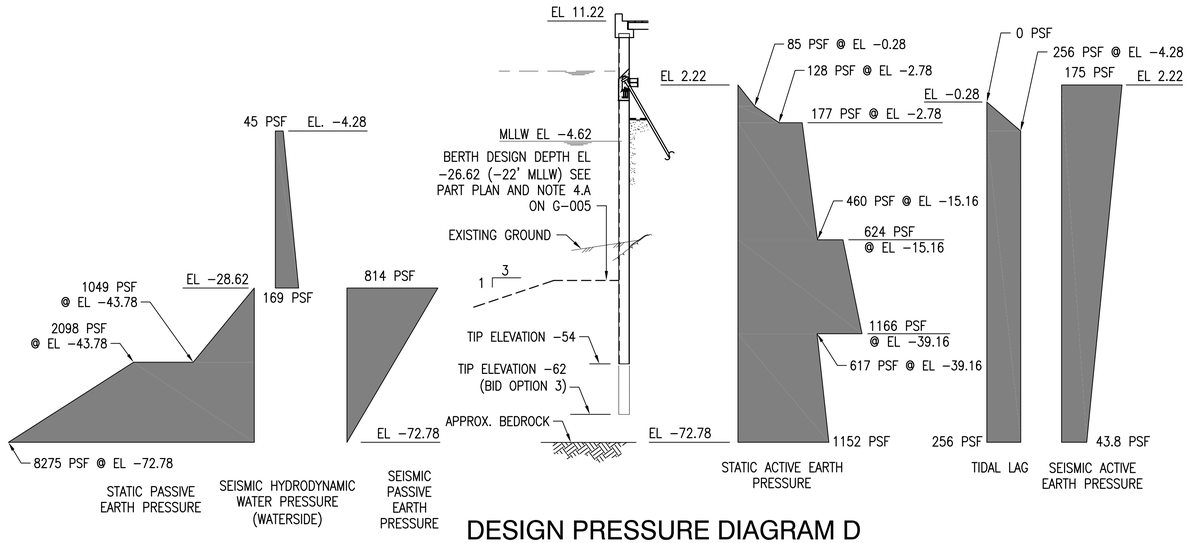

DESIGN PRESSURE DIAGRAM D

(BERTH 11A EAST END – STEEL SHEET PILE BULKHEAD)

NO.	DESCRIPTION	DATE	APPR

NAVFAC

COMMONWEALTH OF MASSACHUSETTS
DAVID J. MELO
CIVIL
No. 48692
REGISTERED PROFESSIONAL ENGINEER
3/7/16
SEAL

MNFST
A JOINT VENTURE
A/E INFO

APPROVED
Commander
David W. Kunzfeld
FOR COMMANDER NAVFAC

ACTIVITY:
PER DOCUMENT FROM PNSY
CODE 980, KITTERY ME

SATISFACTORY TO DATE: 05/09/16

DES: DJM | DRW: RWT | CHK: DJM

PM/DM: NATHAN LIBBY

BRANCH MANAGER: NATHAN MAHER

FEAD/PM&E: AMN BAHROUR

FIRE PROTECTION: N/A

DEPARTMENT OF THE NAVY
NAVAL FACILITIES ENGINEERING COMMAND
PUBLIC WORKS DEPARTMENT – MAINE
PORTSMOUTH NAVAL SHIPYARD

NAVAL FACILITIES ENGINEERING COMMAND ~ MID-ATLANTIC
NAVAL SHIPYARD – PORTSMOUTH, NH
KITTERY, MAINE

STRUCTURAL REPAIRS AT BERTHS 11A, 11B AND 11C

DESIGN DATA – SHEET 2 OF 2

EPROJECT NO.: 1356489

CONSTR. CONTR. NO.
N40085-XX-C-XXXX

NAVFAC DRAWING NO.
12716002

SHEET 6 OF 144

G-006 | FP2-16-642

DRAWFORM REVISION: 10 OCTOBER 2014

FILE NAME: S:\1794\Active\179410203\VP-104A PNSY Lifting Study\VP-104A PNSY Lifting Study\02 CADD\01 General\FP2-16-642.dwg LAYOUT NAME: DESIGN DATA – SHEET 2 OF 2 PLOTTED: Friday, May 13, 2016 – 2:21pm USER: cgoodridge

NOTES:

1. PROVIDE A TOTAL OF 10 FOUNDATIONS FOR BROWS.
2. PROVIDE FOUNDATIONS FOR FUTURE SERVICE BOOMS AT THE 4 LOCATIONS SHOWN.

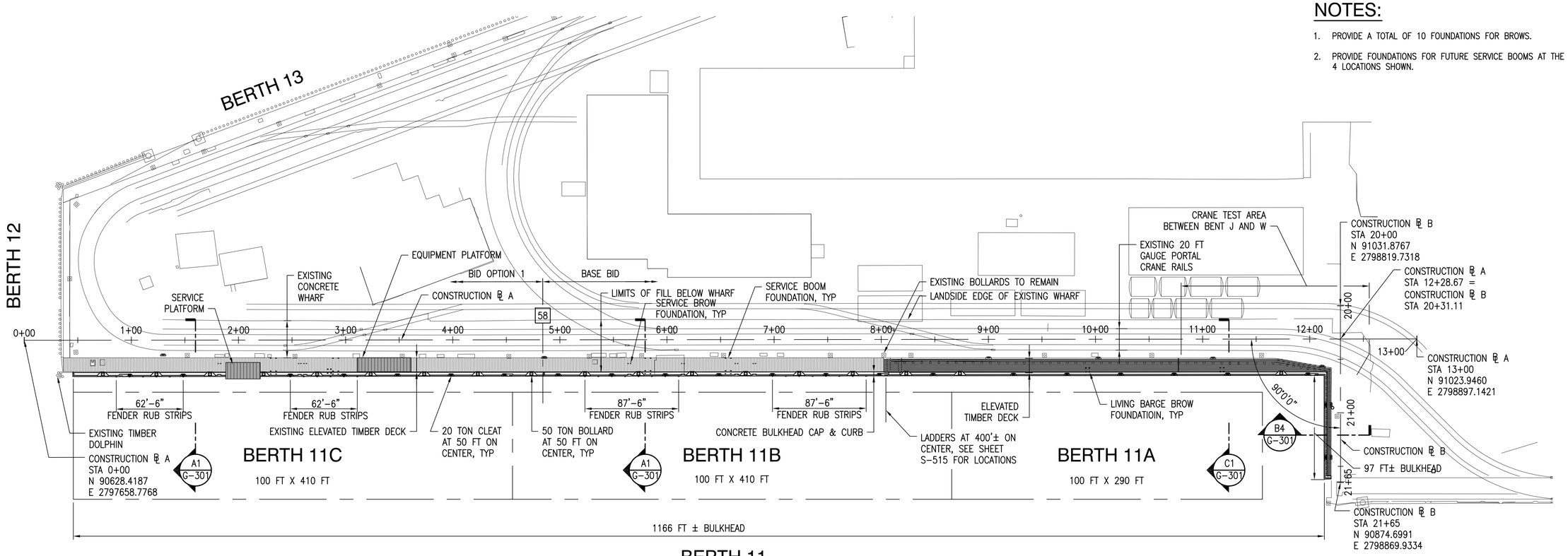

GENERAL PLAN

SCALE: 1"=50'

PLAN NORTH

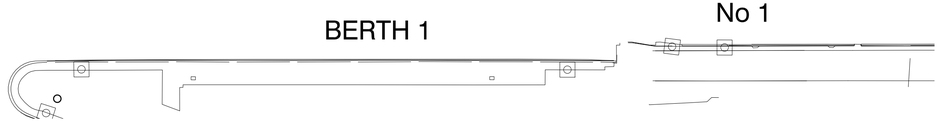

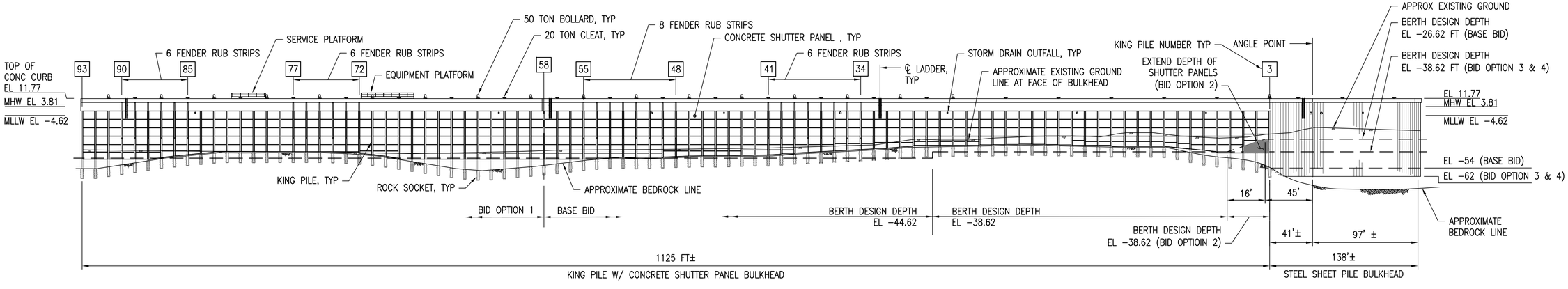

BULKHEAD ELEVATION B1

SCALE: 1"=50'

GRAPHIC SCALE

1"=50'

50' 0 50' 100'

CHECK GRAPHIC SCALE BEFORE USING

APPR	DATE	DESCRIPTION	MJS

NAVFAC

STATE OF MAINE — PAUL F. HARRINGTON 13061 — LICENSED PROFESSIONAL ENGINEER — 3-7-16 — SEAL

MNFST A JOINT VENTURE A/E INFO

APPROVED (Signature) David W. Grunfeld

FOR COMMANDER NAVFAC

ACTIVITY: PER DOCUMENT FROM PNSY CODE 980, KITTERY ME

SATISFACTORY TO DATE: 05/09/16

DES: DWH | DRW: RWT | CHK: DWH

PM/DM: NATHAN LIBBY

BRANCH MANAGER: NATHAN MAHER

FEAD/PM&E: AMN BAHROUR

FIRE PROTECTION: N/A

DEPARTMENT OF THE NAVY
NAVAL FACILITIES ENGINEERING COMMAND
PUBLIC WORKS DEPARTMENT - MAINE
PORTSMOUTH NAVAL SHIPYARD

NAVAL FACILITIES ENGINEERING COMMAND ~ MID-ATLANTIC
NAVAL SHIPYARD ~ PORTSMOUTH, NH
KITTERY, MAINE

STRUCTURAL REPAIRS AT BERTHS 11A, 11B AND 11C

GENERAL PLAN

EPROJECT NO.: 1356489

CONSTR. CONTR. NO. N40085-XX-C-XXXX

NAVFAC DRAWING NO. 12716003

SHEET 7 OF 144

G-101 | FP2-16-643

DRAWFORM REVISION: 10 OCTOBER 2014

FILE NAME: S:\179A\Active\179410203\V\TP-104A PNSY Lifting Study\TP-104A PNSY Lifting Study\02 CADD\01 General\FP2-16-643.dwg LAYOUT NAME: GENERAL PLAN PLOTTED: Friday, May 13, 2016 - 2:22pm USER: cgoodridge

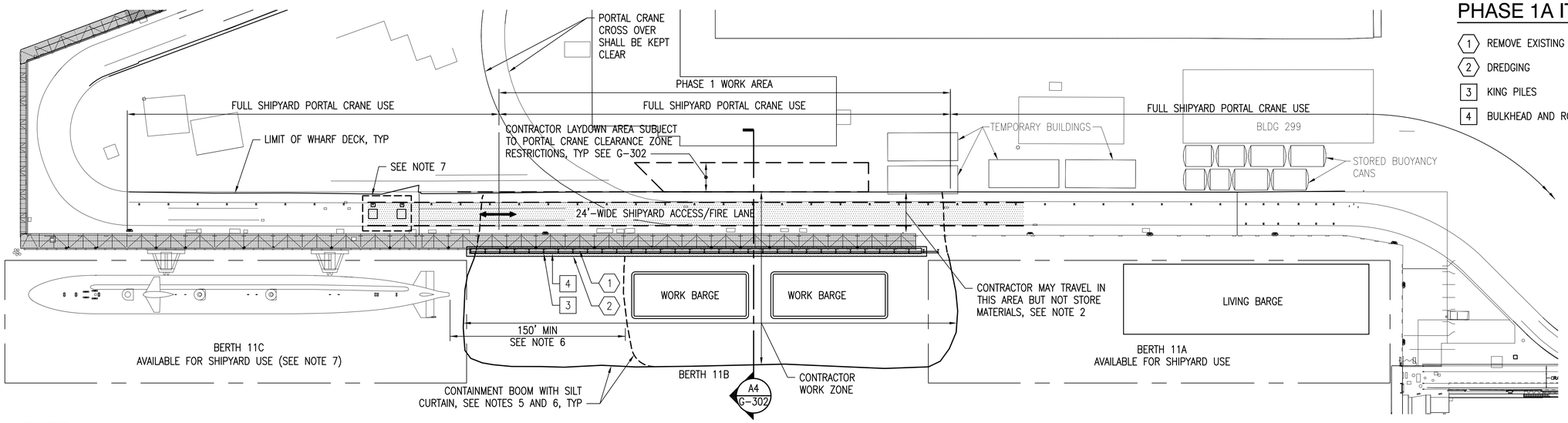

PHASE 1A ITEMS

1. REMOVE EXISTING TIMBER RUB STRIPS AND CHOCKS
2. DREDGING
3. KING PILES
4. BULKHEAD AND ROCK ANCHORS

NOTES:

1. A 24 FOOT WIDE FIRE LANE THRU THE WORK ZONE SHALL BE MAINTAINED AT ALL TIMES DURING CONSTRUCTION. THE CONTRACTOR SHALL NOT STORE ANY MATERIAL IN THIS AREA. THE FIRE LANE SHALL BE CLEARLY MARKED AT ALL TIMES. SEE SHEET G-106 FOR TEMPORARY SIGNAGE REQUIREMENTS.
2. IN AREAS DESIGNATED AS FULL SHIPYARD PORTAL CRANE USE, THE CONTRACTOR MAY TRAVEL ACROSS THIS AREA BUT CANNOT STORE MATERIAL WITHIN THIS AREA.
3. IN AREAS DESIGNATED AS LIMITED PORTAL CRANE TRAVEL AREA, THE CONTRACTOR MAY EXECUTE THE WORK IN THESE AREAS. HOWEVER, THE CONTRACTOR WILL BE REQUIRED TO ACCOMMODATE PERIODIC CRANE TRAVEL THRU THE WORK ZONE. SEE SHEET G-105 AND THE CONTRACT SPECIFICATIONS FOR ADDITIONAL INFORMATION.
4. THE CONTRACTOR SHALL PROVIDE A STABLE SLOPE IN THE BACKFILL UNDER THE DECK AT THE INTERFACE BETWEEN PHASES. THE CAST IN PLACE CAP AND THE TENSIONING OF THE ROCK ANCHORS IN THIS AREA WILL NEED TO BE SEQUENCED ACCORDINGLY AND SHALL BE COMPLETED IN THE SUBSEQUENT PHASE.
5. FOR SILT AND TURBIDITY CURTAIN PLAN AND NOTES SEE SHEET C-101.
6. CONTRACTOR WILL NOT BE PERMITTED TO WORK WITHIN 150 FEET OF A BERTHED SUBMARINE. THE CONTRACTOR'S SCHEDULE SHALL BE COORDINATED WITH THE DOCKING SCHEDULE. THIS INCLUDES MAINTAINING THE CONTAINMENT BOOM AND SILT CURTAIN 150' CLEAR OF BERTHED SUBMARINE.
7. SUPPORT PILE INSTALLATION AND DECK AND PILE JACKET REPAIRS AT BERTH 11C CAN BE PERFORMED DURING PHASE 1 AND 2 IF THE BERTH IS AVAILABLE AND IF APPROVED BY THE CONTRACTING OFFICER. SEE G-105 FOR ADDITIONAL REQUIREMENTS.
8. SUPPORT PILES WITHIN THE CRANE TEST AREA IN BERTH 11A MUST BE COMPLETED IN PHASE 1B
9. SUPPORT PILES OUTSIDE OF THE CRANE TEST AREA AND DECK AND PILE JACKET REPAIRS AT BERTH 11A CAN BE PERFORMED DURING PHASE 1 IF THE BERTH IS AVAILABLE AND IF APPROVED BY THE CONTRACTING OFFICER. SEE G-105 FOR ADDITIONAL REQUIRMENTS.
10. FIRE LANE SHALL BE ROUTED AROUND THE TEMP BUILDINGS AND BLDG 299 WHEN WORK ZONE IS ESTABLISHED FOR WHARF DECK WORK AT THE EAST END OF BERTH 11B AND CRANE TEST AREA IN BERTH 11A.

PHASING PLAN - PHASE 1A

SCALE: 1" = 50'

PLAN NORTH

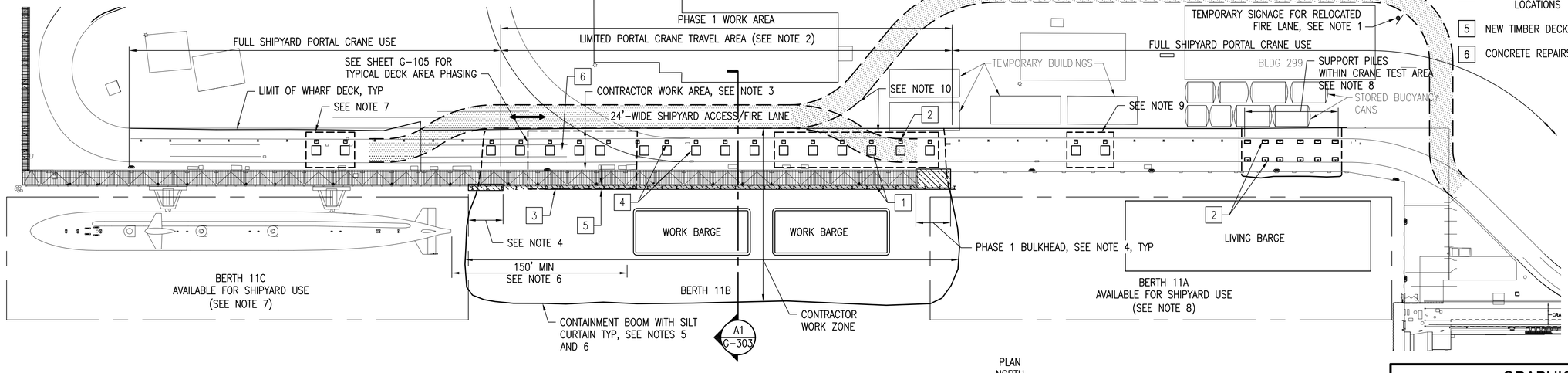

PHASE 1B ITEMS

1. BACKFILL
2. INSTALL SUPPORT PILES
3. STRESS ROCK ANCHORS
4. RESTORE DECK AT FILL ACCESS AND SUPPORT PILE LOCATIONS
5. NEW TIMBER DECK
6. CONCRETE REPAIRS

PHASING PLAN - PHASE 1B

SCALE: 1" = 50'

PLAN NORTH

GRAPHIC SCALE

1"=50'

50' 0 50' 100'

CHECK GRAPHIC SCALE BEFORE USING

APPR	DATE	DESCRIPTION	SYM

NAVFAC

STATE OF MAINE — PAUL F. HARRINGTON 13061 — LICENSED PROFESSIONAL ENGINEER — 3-7-16 — SEAL

MNFST A JOINT VENTURE

A/E INFO

APPROVED (Name and Title) David W. Thurfield

FOR COMMANDER NAVFAC

ACTIVITY:
PER DOCUMENT FROM PNSY
CODE 980, KITTERY ME

SATISFACTORY TO DATE: 05/09/16

DES: DWH | DRW: CHG | CHK: DWH

PM/DM: NATHAN LIBBY

BRANCH MANAGER: NATHAN MAHER

FEAD/PM&E: AMIN BAHROUR

FIRE PROTECTION: N/A

DEPARTMENT OF THE NAVY
NAVAL FACILITIES ENGINEERING COMMAND
PUBLIC WORKS DEPARTMENT - MAINE
PORTSMOUTH NAVAL SHIPYARD

NAVAL FACILITIES ENGINEERING COMMAND ~ MID-ATLANTIC
NAVAL SHIPYARD ~ PORTSMOUTH, NH
KITTERY, MAINE

STRUCTURAL REPAIRS AT BERTHS 11A, 11B AND 11C

PHASING PLAN – PHASE 1

EPROJECT NO.: 1356489

CONSTR. CONTR. NO.
N40085-XX-C-XXXX

NAVFAC DRAWING NO.
12716004

SHEET 8 OF 144

G-102 | FP2-16-644

DRAWFORM REVISION: 10 OCTOBER 2014

FILE NAME: S:\1794\Active\179410203\VTP-104A PNSY Lifting Study\VTP-104A PNSY Lifting Study\02 CADD\01 General\FP2-16-644.dwg LAYOUT NAME: PHASING PLAN - PHASE 1 PLOTTED: Friday, May 13, 2016 - 2:23pm USER: cgocdridge

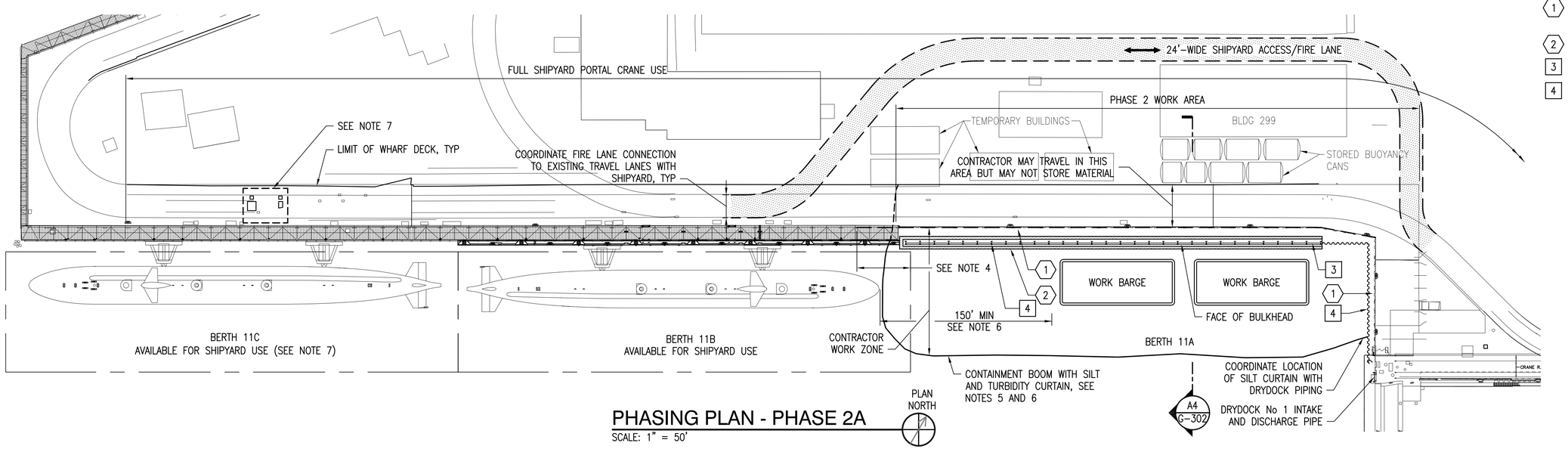

PHASE 2A ITEMS

1. DEMOLISH EXISTING FENDER SYSTEM
2. DREDGING
3. KINGPILES
4. BULKHEAD AND ROCK ANCHORS

PHASING PLAN - PHASE 2A

SCALE: 1" = 50'

PLAN NORTH

NOTE:

1. FOR NOTES SEE SHEET G-102.

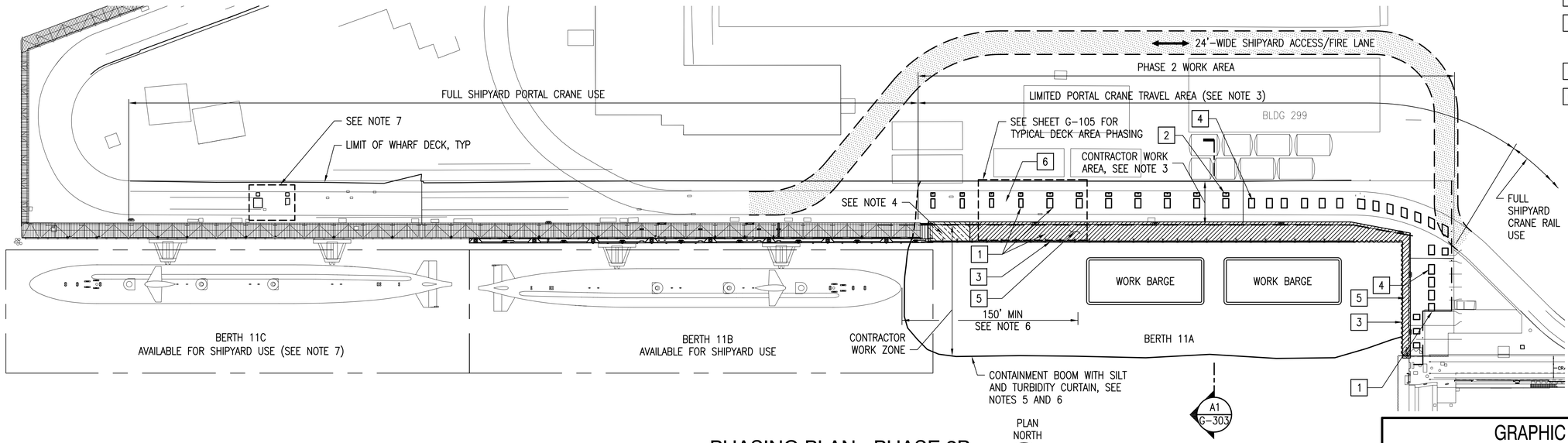

PHASE 2B ITEMS

1. BACKFILL
2. INSTALL SUPPORT PILES
3. STRESS ROCK ANCHORS
4. RESTORE DECK AT FILL ACCESS AND SUPPORT PILE LOCATIONS
5. NEW TIMBER DECK
6. CONCRETE REPAIRS

PHASING PLAN - PHASE 2B

SCALE: 1" = 50'

PLAN NORTH

GRAPHIC SCALE

1"=50'

50' 0 50' 100'

CHECK GRAPHIC SCALE BEFORE USING

APPR	DATE	DESCRIPTION	MJS	STM

NAVFAC

STATE OF MAINE
PAUL F. HARRINGTON
13061
LICENSED
PROFESSIONAL ENGINEER
3-7-16
SEAL

MNFST
A JOINT VENTURE
A/E INFO

APPROVED
DATE
David W. Grunfeld
FOR COMMANDER NAVFAC

ACTIVITY:
PER DOCUMENT FROM PNSY CODE 980, KITTERY ME

SATISFACTORY TO DATE: 05/09/16

DES	DWH	DRW	CHG	CHK	DWH

PM/DM: NATHAN LIBBY
BRANCH MANAGER: NATHAN MAHER
FEAD/PM&E: AMIN BAHROUR
FIRE PROTECTION: N/A

DEPARTMENT OF THE NAVY
NAVAL FACILITIES ENGINEERING COMMAND
PUBLIC WORKS DEPARTMENT - MAINE
PORTSMOUTH NAVAL SHIPYARD

NAVAL FACILITIES ENGINEERING COMMAND ~ MID-ATLANTIC
NAVAL SHIPYARD - PORTSMOUTH, NH
KITTERY, MAINE

STRUCTURAL REPAIRS AT BERTHS 11A, 11B AND 11C

PHASING PLAN - PHASE 2

EPROJECT NO.: 1356489

CONSTR. CONTR. NO.
N40085-XX-C-XXXX

NAVFAC DRAWING NO.
12716005

SHEET 9 OF 144

G-103 | FP2-16-645

DRAWFORM REVISION: 10 OCTOBER 2014

FILE NAME: S:\1794\Active\179410203\YP-104A PNSY Lifting Study\YP-104A PNSY Lifting Study\02 CAD\01 General\FP2-16-645.dwg LAYOUT NAME: PHASING PLAN - PHASE 2 PLOTTED: Friday, May 13, 2016 - 2:23pm USER: cgoodridge

FILE NAME: S:\1794\Active\179410203\VTP-104A PNSY Lifting Study\VTP-104A PNSY Lifting Study\02 CADD\01 General\FP2-16-646.dwg LAYOUT NAME: PHASING PLAN - PHASE 3 PLOTTED: Friday, May 13, 2016 - 2:24pm USER: cgoodridge

PHASE 3A ITEMS BERTH 11C

1. REMOVE EXISTING TIMBER RUB STRIPS AND CHOCKS
2. DREDGING
3. KING PILES
4. BULKHEAD AND ROCK ANCHORS

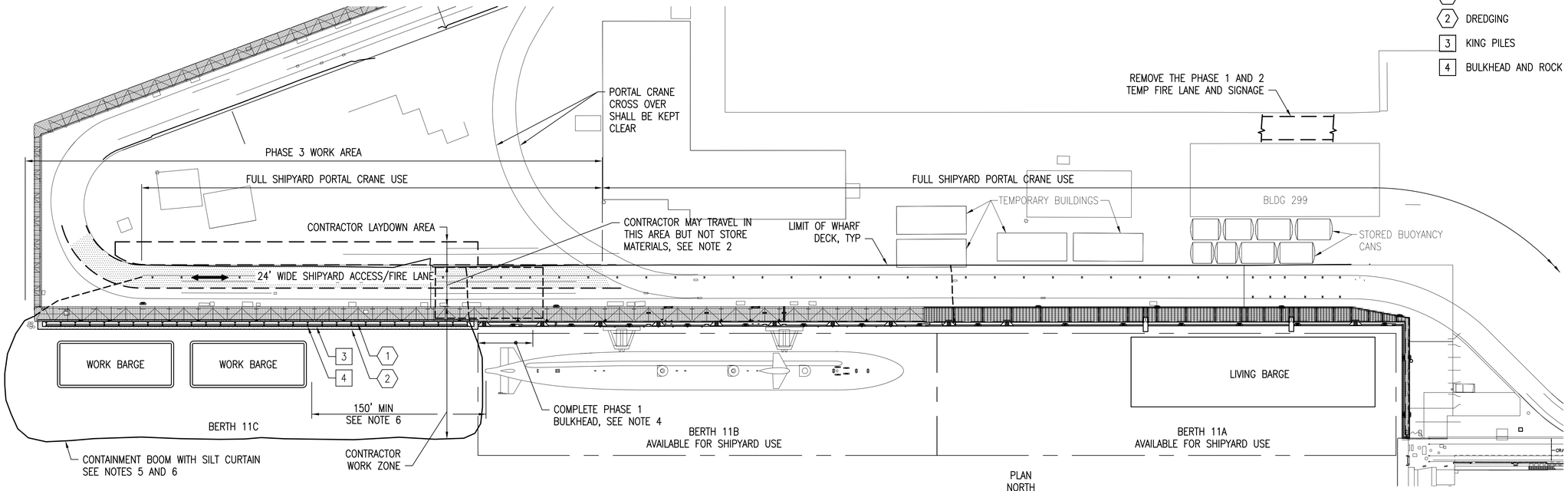

PLAN NORTH

PHASING PLAN FOR BERTH 11C BULKHEAD - PHASE 3A

SCALE: 1" = 50'

NOTE:

1. FOR NOTES SEE SHEET G-102.

PHASE 3B ITEMS BERTH 11C

1. BACKFILL
2. INSTALL SUPPORT PILES
3. STRESS ROCK ANCHORS
4. RESTORE DECK AT FILL ACCESS AND SUPPORT PILE LOCATIONS
5. NEW TIMBER DECK
6. CONCRETE REPAIRS

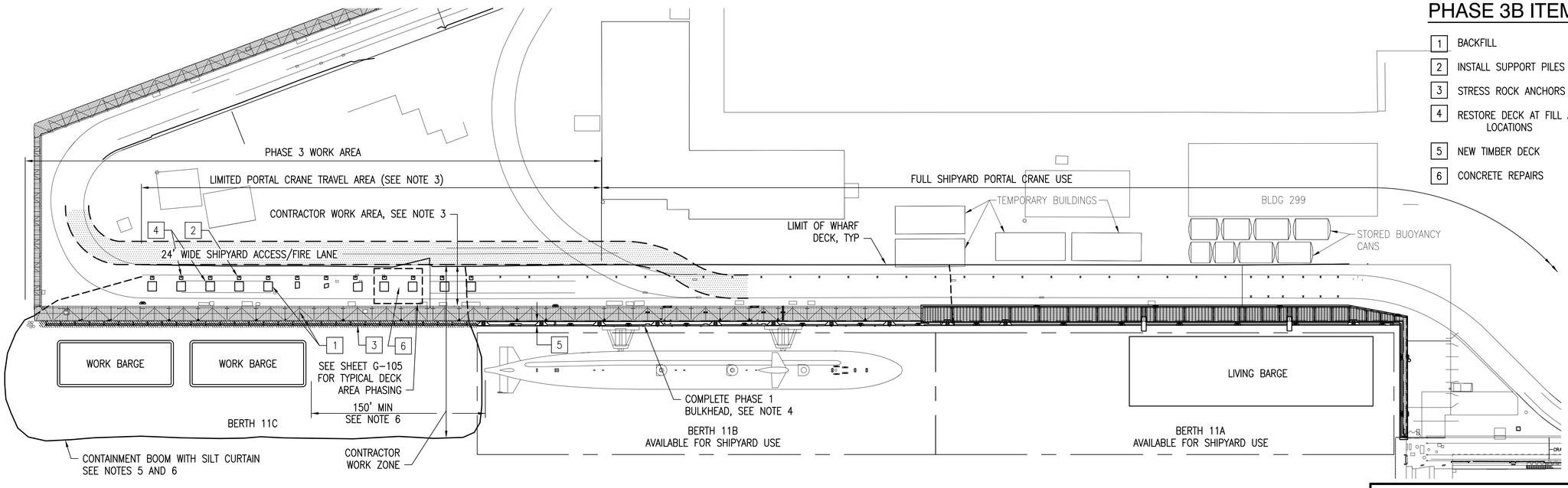

PLAN NORTH

PHASING PLAN - PHASE 3B

SCALE: 1" = 50'

GRAPHIC SCALE

1"=50'

50' 0 50' 100'

CHECK GRAPHIC SCALE BEFORE USING

APPR	DATE	DESCRIPTION	SYM

NAVFAC

STATE OF MAINE
PAUL F. HARRINGTON
13061
LICENSED PROFESSIONAL ENGINEER
3-7-16
SEAL

MN FST
A JOINT VENTURE
A/E INFO

APPROVED
David W. Grunfeld
FOR COMMANDER NAVFAC

ACTIVITY:
PER DOCUMENT FROM PNSY CODE 980, KITTERY ME

SATISFACTORY TO DATE: 05/09/16

DES: DWH | DRW: CHG | CHK: DWH

PM/DM: NATHAN LIBBY

BRANCH MANAGER: NATHAN MAHER

FEAD/PM&E: AMIN BAHROUR

FIRE PROTECTION: N/A

DEPARTMENT OF THE NAVY
NAVAL FACILITIES ENGINEERING COMMAND
PUBLIC WORKS DEPARTMENT - MAINE
PORTSMOUTH NAVAL SHIPYARD

NAVAL FACILITIES ENGINEERING COMMAND
NAVAL SHIPYARD - PORTSMOUTH, NH
KITTERY, MAINE

STRUCTURAL REPAIRS AT BERTHS 11A, 11B AND 11C

PHASING PLAN - PHASE 3

EPROJECT NO.: 1356489

CONSTR. CONTR. NO.
N40085-XX-C-XXXX

NAVFAC DRAWING NO.
12716006

SHEET 10 OF 144

G-104 | FP2-16-646

DRAWFORM REVISION: 10 OCTOBER 2014

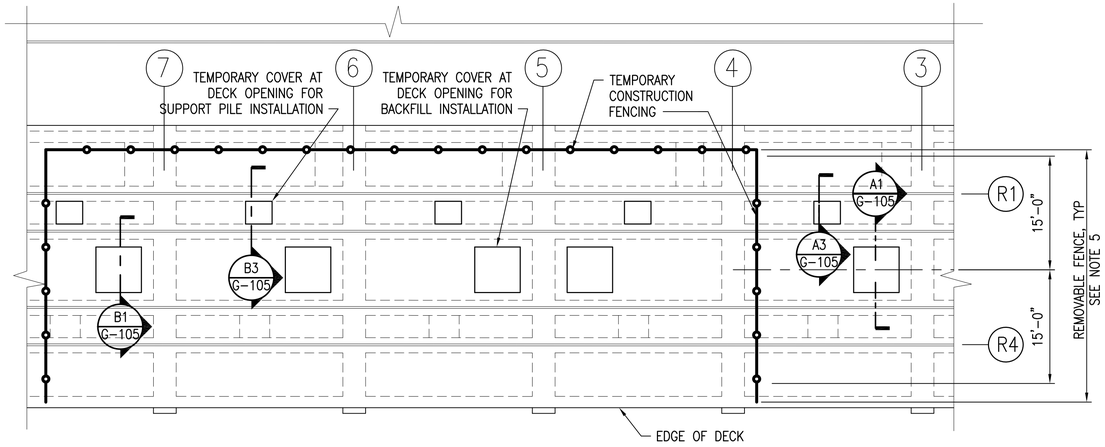

PART DECK PLAN

SCALE: 1"=10'

PLAN NORTH

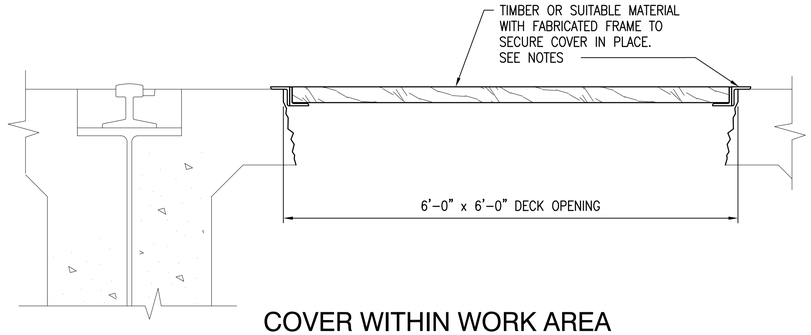

COVER WITHIN WORK AREA

SECTION - BACKFILL OPENING (B1)

SCALE: 1" = 1'-0" G-105

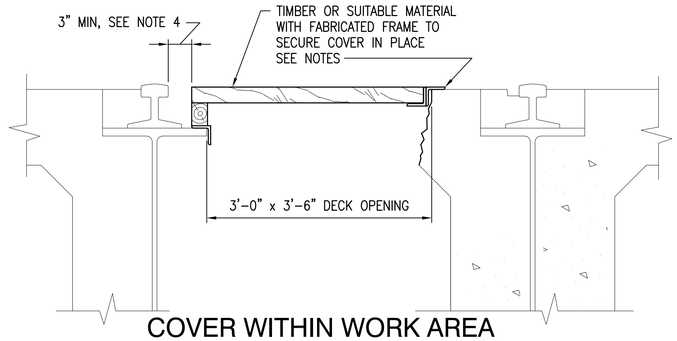

COVER WITHIN WORK AREA

SECTION - SUPPORT PILE OPENING (B3)

SCALE: 1" = 1'-0" G-105

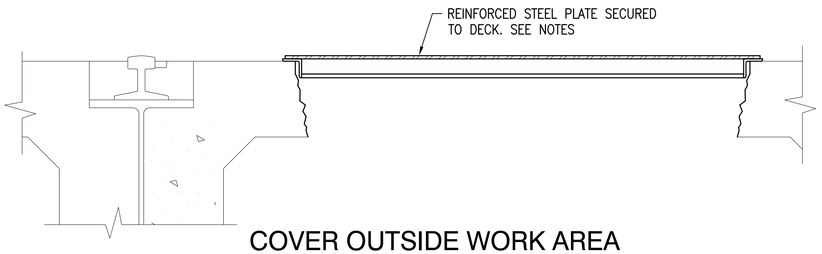

COVER OUTSIDE WORK AREA

SECTION - BACKFILL OPENING (A1)

SCALE: 1" = 1'-0" G-105

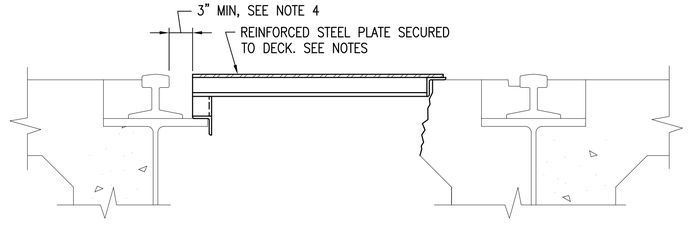

COVER OUTSIDE WORK AREA

SECTION - SUPPORT PILE OPENING (A3)

SCALE: 1" = 1'-0" G-105

NOTES:

1. IN ADDITION TO THE CONTRACT REQUIREMENTS FOR WORK ZONE AND WORKER PROTECTION, THE CONTRACTOR SHALL ADHERE TO THE FOLLOWING CRITERIA TO ACCOMMODATE PERIODIC CRANE TRAVEL THRU THE WORK ZONES AND SHIPYARD USE OF THE WHARF DECK OUTSIDE OF WORK ZONES WHERE WORK HAS BEEN STARTED.
   - A. THE CONTRACTOR SHALL PROVIDE TEMPORARY COVERS THAT ARE SECURED TO THE DECK.
   - B. THERE SHALL NOT BE ANY MATERIALS THAT EXTEND ABOVE THE DECK.
   - C. THE COVER SHALL NOT CREATE A TRIP HAZARD.
2. THE COVERS SHALL BE CONTRACTOR DESIGNED AND SHALL BE STAMPED BY A PROFESSIONAL ENGINEER REGISTERED IN THE STATE OF MAINE.
3. THE COVERS SHALL BE DESIGNED FOR THE FOLLOWING LOADING:
   - A. COVERS WITHIN CONTRACTORS WORK AREA:
     - UNIFORM LIVE LOAD 50 PSF MIN
     - CONCENTRATED LOAD OF 300 LBS
     - CONSTRUCTION LIVE LOADS
   - B. IF THE CONTRACTOR IS ALLOWED TO WORK IN AREAS OUTSIDE OF THE ACTIVE CONSTRUCTION PHASE LIMITS (INCLUDING THE CRANE TEST AREA) AND CANNOT COMPLETE THE DECK REPLACEMENT TO SUPPORT SHIPYARD OPERATIONAL NEEDS, THEY SHALL PROVIDE COVERS THAT CAN SUPPORT THE FOLLOWING LOADING:
     - UNIFORM LIVE LOAD 250 PSF
     - VEHICLE LOADING – AASHTO HS20
     - FORKLIFT – 5 TON TRUCK
4. THE TEMPORARY COVER FOR THE SUPPORT PILES SHALL BE KEPT 3 INCHES CLEAR OF THE RAIL AND SHALL HAVE A POSITIVE SUPPORT ANCHOR SUCH THAT IT CANNOT BE DISLODGED.
5. ANY WORK ZONE PROTECTION ELEMENT (GATES, FENCING, SUPPORTS, BARRIER, ETC.) WITHIN 15 FEET OF THE PORTAL CRANE RAIL CENTERLINE SHALL BE CAPABLE OF BEING REMOVED ON SHORT NOTICE TO ACCOMMODATE CRANE TRAVEL THROUGH THE WORK AREA.

GRAPHIC SCALE

1"=10' 10' 0 10' 20'

CHECK GRAPHIC SCALE BEFORE USING

APPR	DATE	DESCRIPTION	MJS

NAVFAC

STATE OF MAINE
PAUL F. HARRINGTON
13061
LICENSED PROFESSIONAL ENGINEER
3-7-16
SEAL

MN FST
A JOINT VENTURE
A/E INFO

APPROVED
David W. Grunfeld
FOR COMMANDER NAVFAC

ACTIVITY:
PER DOCUMENT FROM PNSY
CODE 980, KITTERY ME

SATISFACTORY TO DATE: 05/09/16

DES	PFH	DRW	RWT	CHK	DEH

PM/DM: NATHAN LIBBY
BRANCH MANAGER: NATHAN MAHER
FEAD/PM&E: AMIN BAHROUR
FIRE PROTECTION: N/A

DEPARTMENT OF THE NAVY
NAVAL FACILITIES ENGINEERING COMMAND
PUBLIC WORKS DEPARTMENT – MAINE
PORTSMOUTH NAVAL SHIPYARD

NAVAL FACILITIES ENGINEERING COMMAND – MID-ATLANTIC
NAVAL SHIPYARD – PORTSMOUTH, NH
KITTERY, MAINE

STRUCTURAL REPAIRS
AT BERTHS 11A, 11B AND 11C

PHASING PLAN – PART PLAN

EPROJECT NO.: 1356489
CONSTR. CONTR. NO. N40085-XX-C-XXXX
NAVFAC DRAWING NO. 12716007
SHEET 11 OF 144

G-105 | FP2-16-647

DRAWFORM REVISION: 10 OCTOBER 2014

FILE NAME: S:\1794\Active\179410203\VTP-104A PNSY Lifting Study\TP-104A PNSY Lifting Study\02 CAD\01 General\FP2-16-647.dwg LAYOUT NAME: PHASING PLAN - PART PLAN PLOTTED: Friday, May 13, 2016 - 2:24pm USER: cgoodridge

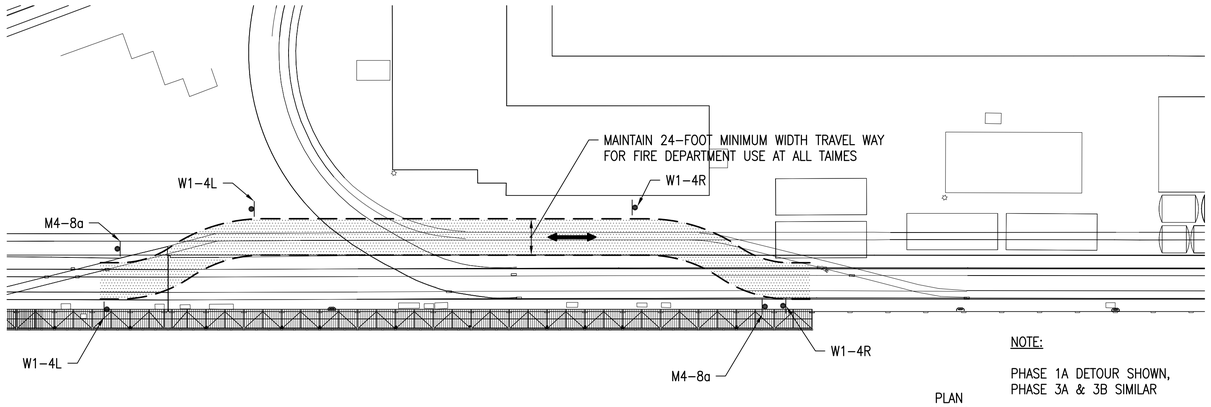

NOTE:

PHASE 1A DETOUR SHOWN,
PHASE 3A & 3B SIMILAR

PHASE 1B DETOUR

SCALE: 1" = 50'

PLAN NORTH

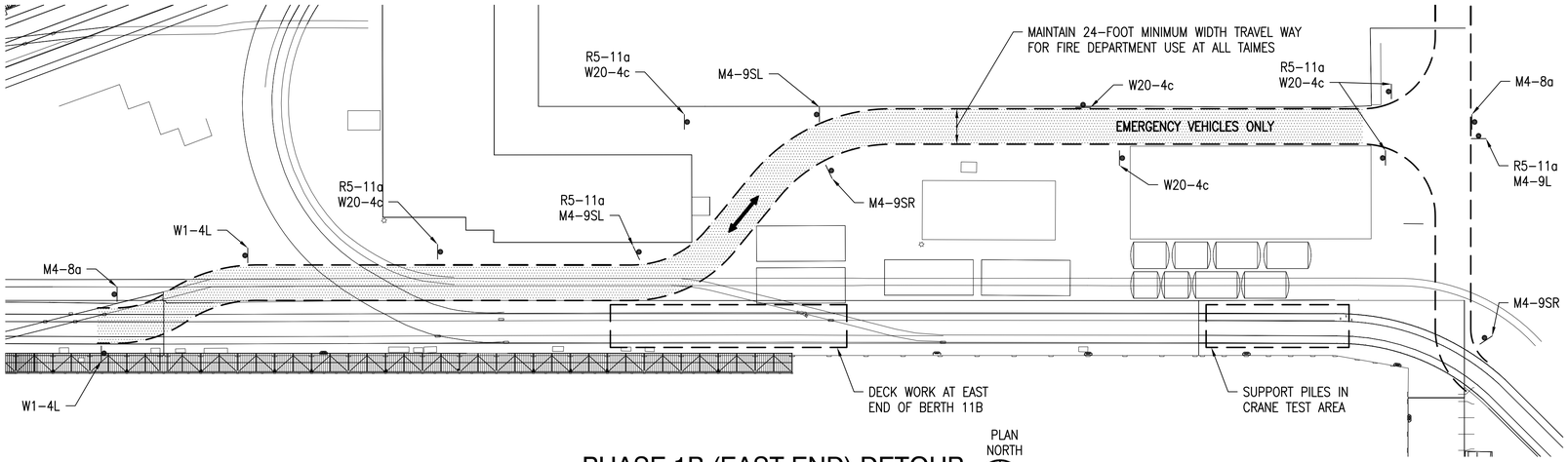

PHASE 1B (EAST END) DETOUR

SCALE: 1" = 50'

PLAN NORTH

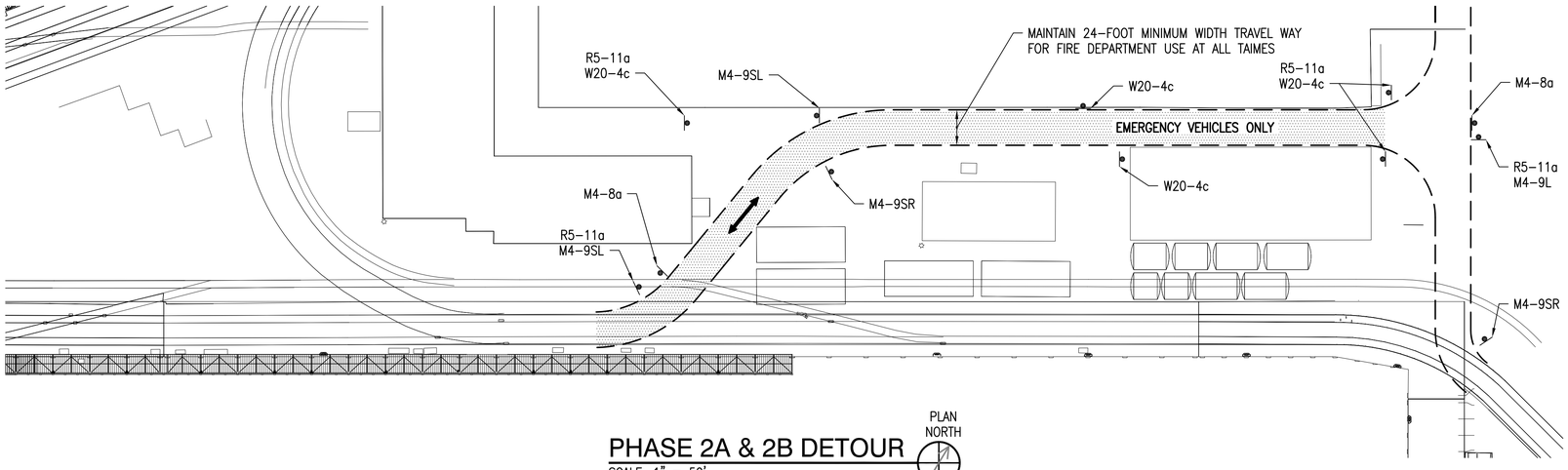

PHASE 2A & 2B DETOUR

SCALE: 1" = 50'

PLAN NORTH

NOTES:

1. ALL SIGN LEGENDS, BORDERS, AND MOUNTING SHALL BE IN ACCORDANCE WITH THE 2009 MUTCD.
2. TEMPORARY CONSTRUCTION SIGNING SHALL BE IN PLACE PRIOR TO THE START OF ANY WORK.
3. TEMPORARY CONSTRUCTION SIGNING, BARRICADES, AND ALL OTHER NECESSARY WORK ZONE TRAFFIC CONTROL DEVICES SHALL BE REMOVED FROM WHEN THEY ARE NOT REQUIRED.
4. SIGNS AND SIGN SUPPORTS LOCATED ON THE TRAVELED WAY SHALL PASS THE CRITERIA SET FORTH IN NCHRP REPORT 350, "RECOMMENDED PROCEDURES FOR THE SAFETY PERFORMANCE EVALUATION OF HIGHWAY FEATURES."
5. MINIMUM FIRE LANE WIDTH SHALL BE 24 FEET UNLESS OTHERWISE SHOWN.
6. ALL SIGNS SHALL BE MOUNTED ON THEIR OWN STANDARD SIGN SUPPORTS.
7. ALL SIGNS SHALL BE LOCATED OUTSIDE THE PORTAL CRANE CLEARANCE ENVELOP.

TEMPORARY SIGN SUMMARY

IDENTIFICATION NUMBER	SIZE OF SIGN		TEXT	QTY. OF SIGNS REQUIRED	COLOR			AREA IN SQUARE FEET
	WIDTH	HEIGHT			BACKGROUND	LEGEND	BORDER	
R5-11a	30"	24"	EMERGENCY VEHICLES ONLY	6	WHITE	BLACK	BLACK	30.00
M4-8a	24"	18"	END DETOUR	2	ORANGE	BLACK	BLACK	6.00
M4-9L	30"	24"	DETOUR ←	1				5.00
M4-9SL	30"	24"	DETOUR ↖	2				10.00
M4-9SR	30"	24"	DETOUR ↗	2				10.00
W1-4L	36"	36"	↰	2				18.00
W1-4R	36'	36"	↱	2				18.00
W20-4c	36"	36"	FIRE LANE KEEP CLEAR	6				54.00

GRAPHIC SCALE

1"=50'

50' 0 50' 100'

CHECK GRAPHIC SCALE BEFORE USING

NO.	DESCRIPTION	DATE	APPR

NAVFAC

STATE OF MAINE
PAUL F. HARRINGTON
13061
LICENSED
PROFESSIONAL ENGINEER
3-7-16
SEAL

MNFST
A JOINT VENTURE
A/E INFO

APPROVED
David W. Thurfield
FOR COMMANDER NAVFAC

ACTIVITY:
PER DOCUMENT FROM PNSY
CODE 980, KITTERY ME

SATISFACTORY TO DATE: 05/09/14

DES: DWH | DRW: CHG | CHK: PFH

PM/DM: NATHAN LIBBY

BRANCH MANAGER: NATHAN MAHER

FEAD/PM&E: AMIN BAHROUR

FIRE PROTECTION: N/A

DEPARTMENT OF THE NAVY
NAVAL FACILITIES ENGINEERING COMMAND
PUBLIC WORKS DEPARTMENT - MAINE
PORTSMOUTH NAVAL SHIPYARD

NAVAL FACILITIES ENGINEERING COMMAND ~ MID-ATLANTIC
NAVAL SHIPYARD ~ PORTSMOUTH, NH
KITTERY, MAINE

STRUCTURAL REPAIRS
AT BERTHS 11A, 11B AND 11C

TEMPORARY SIGNAGE PLAN

EPROJECT NO.: 1356489

CONSTR. CONTR. NO.
N40085-XX-C-XXXX

NAVFAC DRAWING NO.
12716008

SHEET 12 OF 144

G-106 | FP2-16-648

DRAWFORM REVISION: 10 OCTOBER 2014

FILE NAME: S:\1794\Active\179410203\1\TP-104A PNSY Lifting Study\TP-104A PNSY Lifting Study\02 CAD\01 General\FP2-16-648.dwg LAYOUT NAME: TEMPORARY SIGNAGE PLAN PLOTTED: Friday, May 13, 2016 - 2:25pm USER: cgoodridge

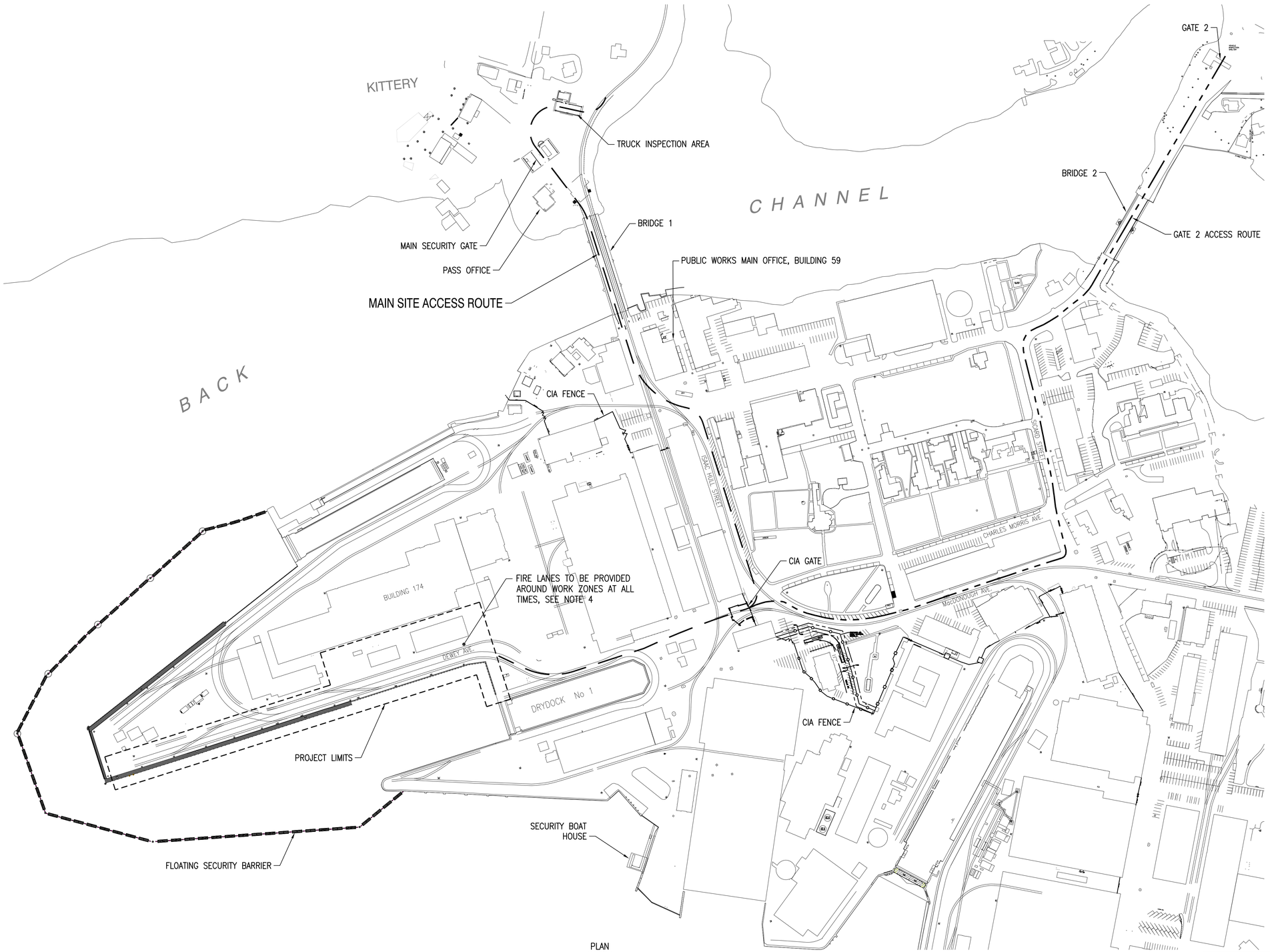

PLAN
SCALE: 1"=150'

PLAN NORTH

LEGEND:

- MAIN SITE ACCESS ROUTE
- GATE 2 ACCESS ROUTE
- PROJECT LIMITS
- FLOATING SECURITY BARRIER

NOTES:

1. CONTRACTOR SHALL COORDINATE ALL BARGE ACCESS AND MOORING LOCATIONS WITH THE CONTRACTING OFFICER.
2. CONTRACTOR SHALL COORDINATE USE OF GATES 1 AND 2 FOR WIDE LOAD DELIVERIES WITH CONTRACTING OFFICER.
3. PROJECT LIMIT AND LAYDOWN AREAS ARE APPROXIMATE. LIMITS TO BE DETERMINED AT THE TIME OF CONSTRUCTION.
4. TEMPORARY FIRE LANES SHALL BE COORDINATED WITH CONTRACTING OFFICER PRIOR TO CONSTRUCTION, SEE PHASING PLANS AND TEMPORARY SIGNAGE PLAN ON SHEET G-106 FOR ADDITIONAL CRITERIA.

GRAPHIC SCALE
1"=150' 150' 0 150' 300'
CHECK GRAPHIC SCALE BEFORE USING

APPR	DATE	DESCRIPTION	MJS

NAVFAC

STATE OF MAINE
PAUL F. HARRINGTON
13061
LICENSED
PROFESSIONAL ENGINEER
3-7-16
SEAL

MN FST
A JOINT VENTURE
A/E INFO

APPROVED
DAVID W. GRUNFELD
FOR COMMANDER NAVFAC

KITTERY
PER DOCUMENT FROM PNSY CODE 980, KITTERY ME

SATISFACTORY TO DATE: 05/09/16

DES DWH | DRW CHG | CHK PFH

PM/DM: NATHAN LIBBY

BRANCH MANAGER: NATHAN MAHER

FEAD/PM&E: AMIN BAHROUR

FIRE PROTECTION: N/A

DEPARTMENT OF THE NAVY
NAVAL FACILITIES ENGINEERING COMMAND
PUBLIC WORKS DEPARTMENT - MAINE
PORTSMOUTH NAVAL SHIPYARD

NAVAL FACILITIES ENGINEERING COMMAND – MID-ATLANTIC
NAVAL SHIPYARD – PORTSMOUTH, NH

STRUCTURAL REPAIRS AT BERTHS 11A, 11B AND 11C

KITTERY, MAINE

SITE ACCESS PLAN

EPROJECT NO.: 1356489

CONSTR. CONTR. NO.
N40085-XX-C-XXXX

NAVFAC DRAWING NO.
12716009

SHEET 13 OF 144

G-107 | FP2-16-649

DRAWFORM REVISION: 10 OCTOBER 2014

FILE NAME: S:\1794\Active\179410203\TP-104A PNSY Lifting Study\TP-104A PNSY Lifting Study\02 CAD\01 General\FP2-16-649.dwg LAYOUT NAME: SITE ACCESS PLAN PLOTTED: Friday, May 13, 2016 - 2:25pm USER: cgoodridge

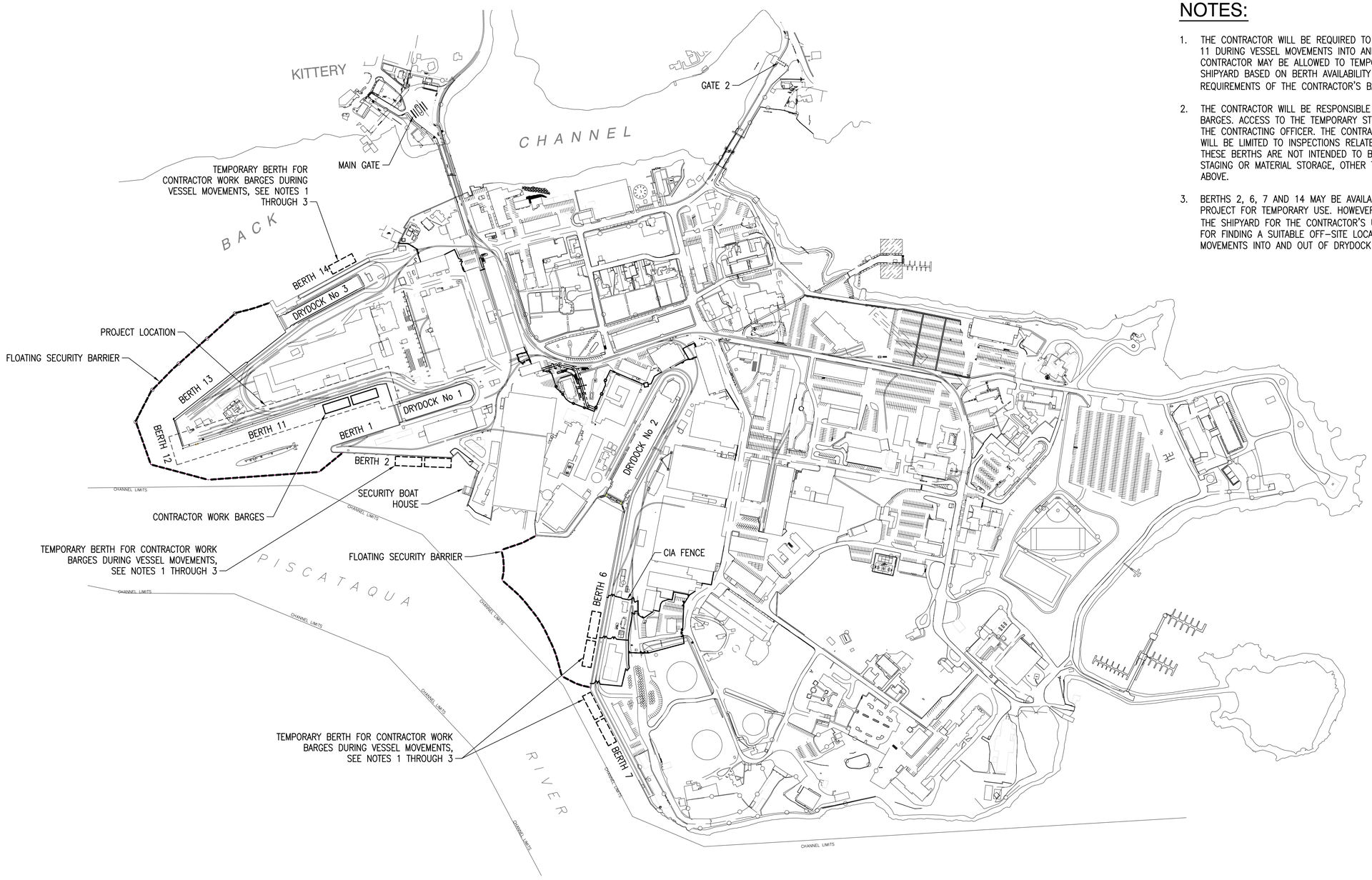

NOTES:

1. THE CONTRACTOR WILL BE REQUIRED TO REMOVE ALL WORK BARGES FROM BERTH 11 DURING VESSEL MOVEMENTS INTO AND OUT OF DRYDOCK No 1. THE CONTRACTOR MAY BE ALLOWED TO TEMPORARILY STORE HIS WORK BARGES AT THE SHIPYARD BASED ON BERTH AVAILABILITY AND THE SIZE AND BERTHING REQUIREMENTS OF THE CONTRACTOR'S BARGES/EQUIPMENT.
2. THE CONTRACTOR WILL BE RESPONSIBLE FOR TYING OFF AND SECURING HIS BARGES. ACCESS TO THE TEMPORARY STORAGE BERTH WILL BE COORDINATED WITH THE CONTRACTING OFFICER. THE CONTRACTOR SHALL ASSUME THAT HIS ACCESS WILL BE LIMITED TO INSPECTIONS RELATED TO ENSURING THE BARGES ARE SECURE. THESE BERTHS ARE NOT INTENDED TO BE AVAILABLE TO THE CONTRACTOR FOR STAGING OR MATERIAL STORAGE, OTHER THAN THE PURPOSES STATED IN NOTE 1 ABOVE.
3. BERTHS 2, 6, 7 AND 14 MAY BE AVAILABLE AT DIFFERENT TIMES THROUGHOUT THE PROJECT FOR TEMPORARY USE. HOWEVER, IF THERE ARE NO BERTHS AVAILABLE AT THE SHIPYARD FOR THE CONTRACTOR'S USE, THE CONTRACTOR IS RESPONSIBLE FOR FINDING A SUITABLE OFF-SITE LOCATION TO STORE BARGES DURING VESSEL MOVEMENTS INTO AND OUT OF DRYDOCK No 1.

PLAN
SCALE: 1"=300'

GRAPHIC SCALE
300' 0 300' 600'
1"=300'
CHECK GRAPHIC SCALE BEFORE USING

MK	DESCRIPTION	DATE	APPR

NAVFAC

STATE OF MAINE
PAUL F. HARRINGTON
13061
LICENSED PROFESSIONAL ENGINEER
3-7-16
SEAL

MN FST
A JOINT VENTURE
A/E INFO

APPROVED (Signature)
David W. Grunfeld
FOR COMMANDER NAVFAC

ACTIVITY:
PER DOCUMENT FROM PNSY
CODE 980, KITTERY ME

SATISFACTORY TO DATE: 05/09/16

DES DWH | DRW CHG | CHK PFH

PM/DM: NATHAN LIBBY

BRANCH MANAGER: NATHAN MAHER

FEAD/PM&E: AMIN BAHROUR

FIRE PROTECTION: N/A

DEPARTMENT OF THE NAVY
NAVAL FACILITIES ENGINEERING COMMAND
PUBLIC WORKS DEPARTMENT - MAINE
PORTSMOUTH NAVAL SHIPYARD

NAVAL FACILITIES ENGINEERING COMMAND
NAVAL SHIPYARD - PORTSMOUTH, NH
MID-ATLANTIC

KITTERY, MAINE

STRUCTURAL REPAIRS AT BERTHS 11A, 11B AND 11C

STAGING PLAN

EPROJECT NO.: 1356489

CONSTR. CONTR. NO.
N40085-XX-C-XXXX

NAVFAC DRAWING NO.
12716010

SHEET 14 OF 144

G-108 | FP2-16-650

DRAWFORM REVISION: 10 OCTOBER 2014

FILE NAME: S:\1794\Active\179410203\V\TP-104A PNSY Lifting Study\TP-104A PNSY Lifting Study\02 CAD\V01 General\FP2-16-650.dwg LAYOUT NAME: STAGING PLAN PLOTTED: Friday, May 13, 2016 - 2:26pm USER: cgoodridge

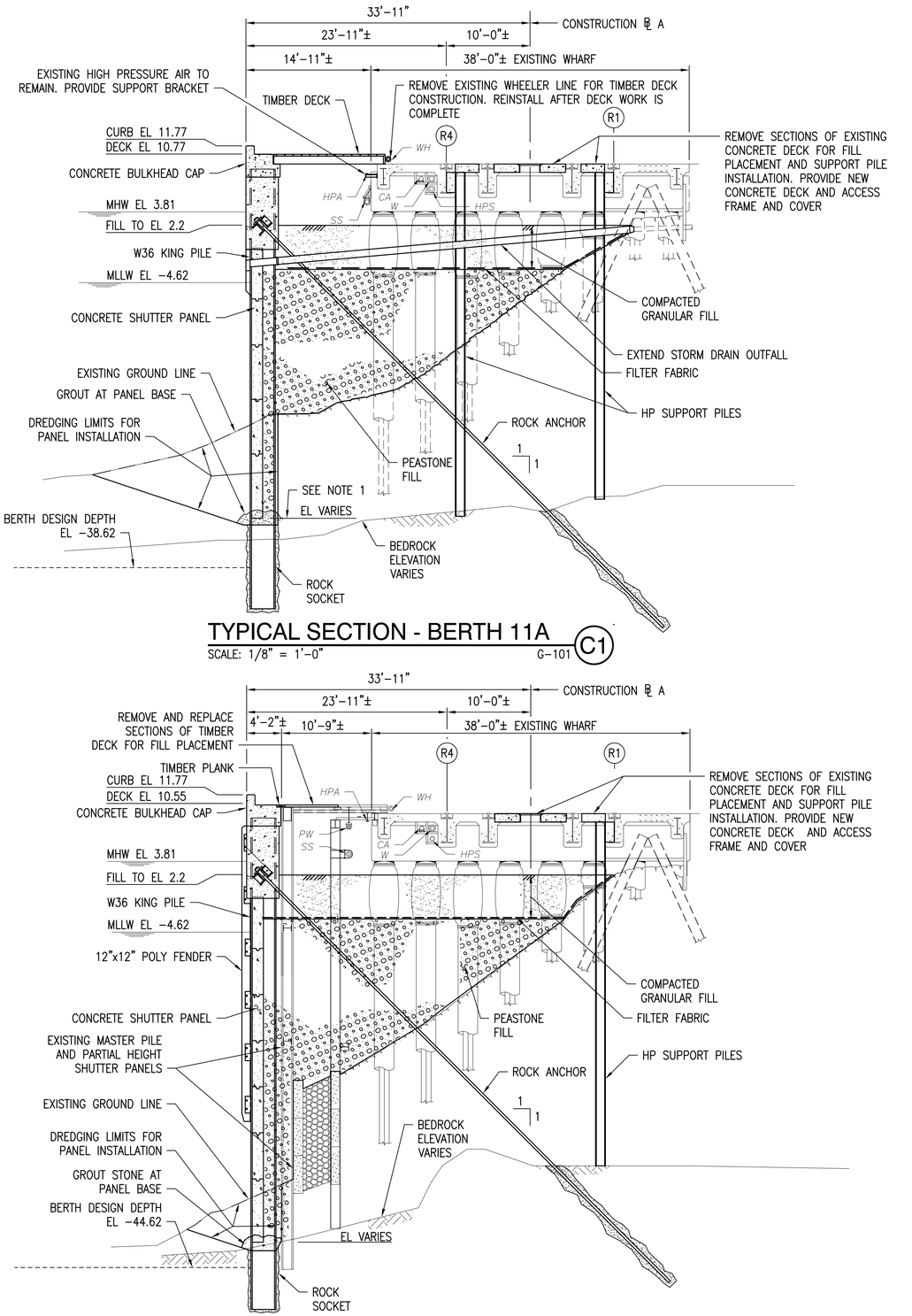

TYPICAL SECTION - BERTH 11A

SCALE: 1/8" = 1'-0" G-101 (C1)

TYPICAL SECTION - BERTHS 11B & 11C

SCALE: 1/8" = 1'-0" G-101 (A1)

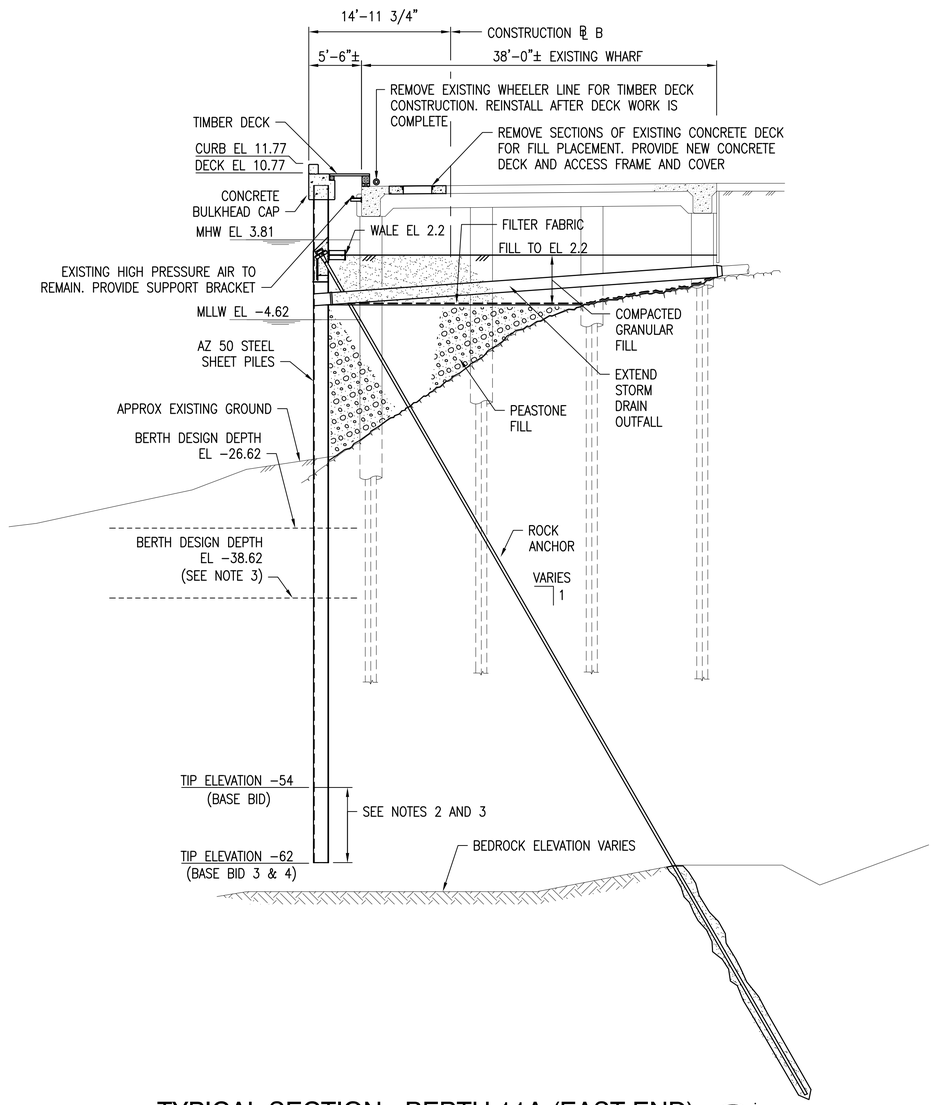

TYPICAL SECTION - BERTH 11A (EAST END)

SCALE: 1/8" = 1'-0" G-101 (B4)

NOTES:

1. EXTEND SHUTTER PANELS BETWEEN KING PILES 3 AND 5 (WHERE BEDROCK IS BELOW ELEVATION -39.62) FROM ELEVATION -27.62 TO ELEVATION -39.62 (OPTION 2).
2. EXTEND DEPTH OF STEEL SHEETING FROM ELEVATION -54.0 TO ELEVATION -62.0 (OPTION 3).
3. EXTEND DEPTH OF STEEL SHEETING FROM ELEVATION -54.0 TO ELEVATION -62.0 AND INCREASE COVER PLATE SIZE, WALE SIZE AND ROCK ANCHOR SIZE (OPTION 4), SEE SHEET S-104.

EXISTING UTILITIES:

CA	COMPRESSED AIR
W	WATER
HPS	HIGH PRESSURE STEAM
SS	SANITARY SEWER
HPA	HIGH PRESSURE AIR
PW	PURE WATER
WH	WHEELER LINE

GRAPHIC SCALE

1/8"=1'-0" 4' 0 4' 8' 12' 16'

CHECK GRAPHIC SCALE BEFORE USING

APPR	DATE	DESCRIPTION	SYM

NAVFAC

STATE OF MAINE
PAUL F. HARRINGTON
13061
LICENSED
PROFESSIONAL ENGINEER
3-7-16
SEAL

MNFST
A JOINT VENTURE
A/E INFO

APPROVED
David W. Grunfeld
FOR COMMANDER NAVFAC

ACTIVITY:
PER DOCUMENT FROM PNSY
CODE 980, KITTERY ME

SATISFACTORY TO DATE: 05/09/16

DES: DWH | DRW: CHG | CHK: DWH

PM/DM: NATHAN LIBBY

BRANCH MANAGER: NATHAN MAHER

FEAD/PM&E: AMIN BAHROUR

FIRE PROTECTION: N/A

DEPARTMENT OF THE NAVY
NAVAL FACILITIES ENGINEERING COMMAND
PUBLIC WORKS DEPARTMENT - MAINE
PORTSMOUTH NAVAL SHIPYARD

NAVAL FACILITIES ENGINEERING COMMAND
NAVAL FACILITIES ENGINEERING COMMAND ~ MID-ATLANTIC
NAVAL SHIPYARD ~ PORTSMOUTH, NH

KITTERY, MAINE

STRUCTURAL REPAIRS
AT BERTHS 11A, 11B AND 11C

GENERAL SECTIONS

EPROJECT NO.: 1356489

CONSTR. CONTR. NO.
N40085-XX-C-XXXX

NAVFAC DRAWING NO.
12716011

SHEET 15 OF 144

G-301 | FP2-16-651

DRAWFORM REVISION: 10 OCTOBER 2014

FILE NAME: S:\1794\Active\1794102003\YP-104A PNSY Lifting Study\YP-104A PNSY Lifting Study\02 CADD\01 General\FP2-16-651.dwg LAYOUT NAME: GENERAL SECTIONS PLOTTED: Friday, May 13, 2016 - 2:26pm USER: cgoodridge

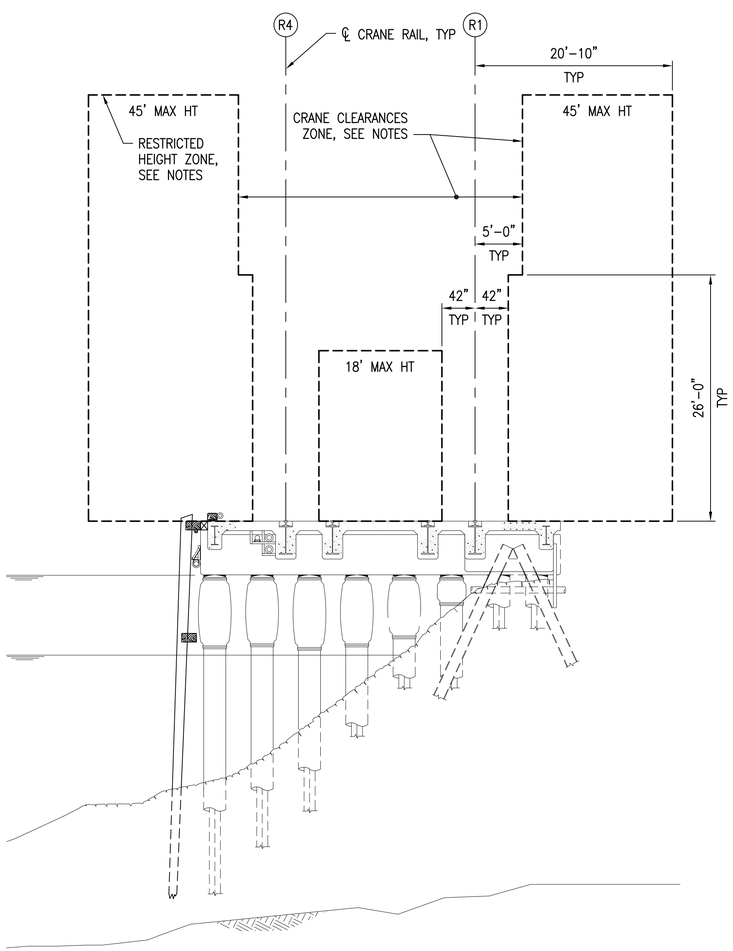

CRANE CLEARANCE ZONE NOTES:

1. DO NOT PLACE ITEMS WITHIN 42" FROM CENTERLINE OF THE CRANE RAIL.
2. FOR AREAS AT THE CURVE NEAR BUILDING 291, THE CRANE CLEARANCE ZONE IS INCREASED TO 60" FROM THE CENTERLINE OF THE RAIL ON ONE SIDE OF THE TAIL AS INDICATED BY PAVEMENT MARKINGS.

RESTRICTED HEIGHT ZONE:

1. ITEMS ARE LIMITED TO A MAXIMUM HEIGHT OF 26' FROM 42" OUT TO 5' FROM CENTERLINE OF THE CRANE RAIL.
2. ITEMS ARE LIMITED TO A MAXIMUM HEIGHT OF 45' FROM 5' OUT TO 20'–10" FROM CENTERLINE OF THE CRANE RAIL.
3. BEYOND 20'–10" THERE ARE NO HEIGHT RESTRICTIONS.
4. ITEMS BETWEEN THE CRANE RAILS SHALL NOT EXTEND INTO THE CRANE CLEAR ZONE AND SHALL NOT BE MORE THAN 18' IN HEIGHT.

PORTAL CRANE CLEARANCE ZONE REQUIREMENTS

SCALE: 1/8" = 1'–0"

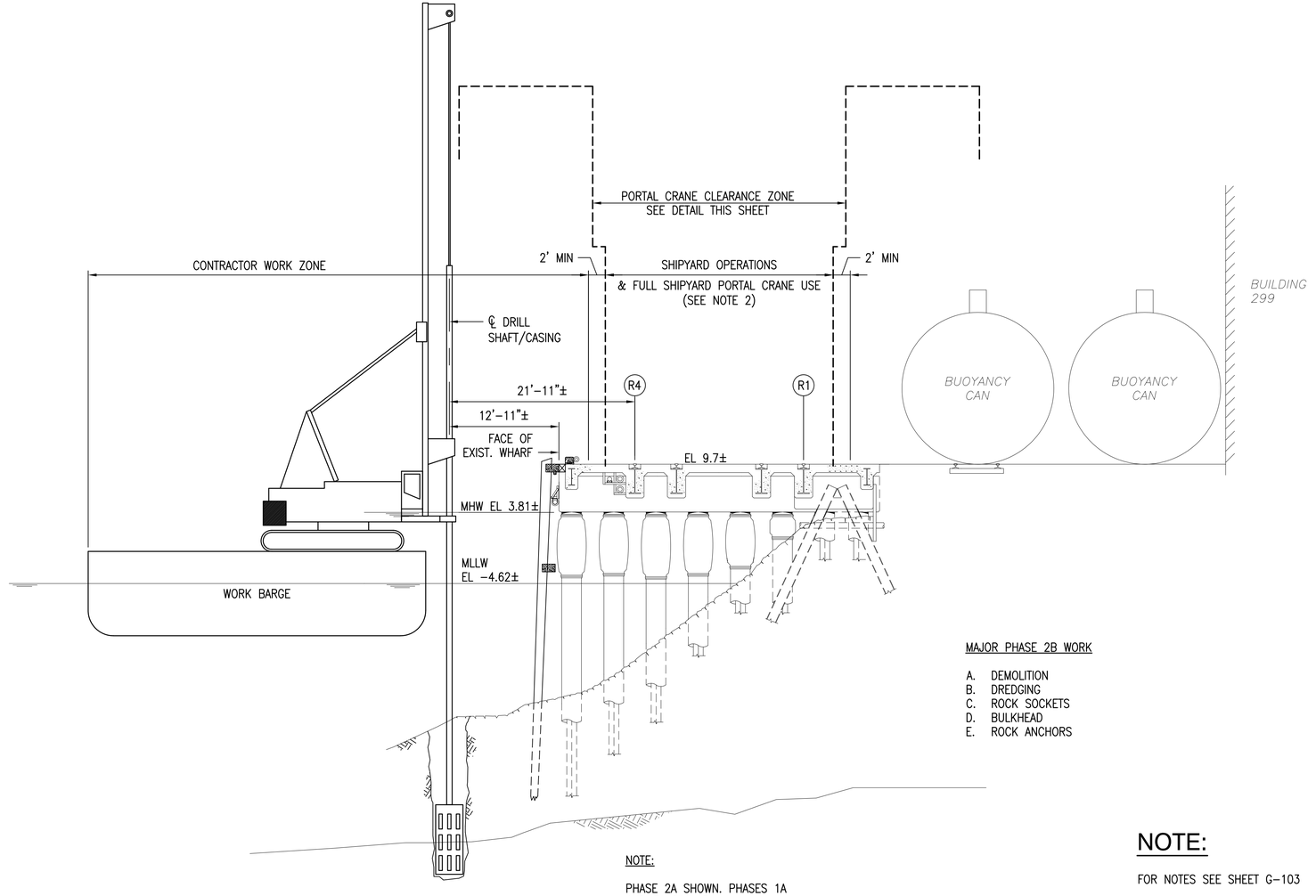

NOTE:

PHASE 2A SHOWN. PHASES 1A AND 3A SIMILAR

TYPICAL SECTION AT BERTH 11A - PHASE 2A

SCALE: 1/8" = 1'–0" G–102, G–103 (A4)

MAJOR PHASE 2B WORK

A. DEMOLITION
B. DREDGING
C. ROCK SOCKETS
D. BULKHEAD
E. ROCK ANCHORS

NOTE:

FOR NOTES SEE SHEET G–103

GRAPHIC SCALE

1/8"=1'–0" 4' 0 4' 8' 12' 16'

CHECK GRAPHIC SCALE BEFORE USING

APPR	DATE	DESCRIPTION	SYM

NAVFAC

STATE OF MAINE
PAUL F. HARRINGTON
13061
LICENSED
PROFESSIONAL ENGINEER
3-7-16
SEAL

MNFST
A JOINT VENTURE
A/E INFO

APPROVED
David W. Grunfeld
FOR COMMANDER NAVFAC

ACTIVITY:
PER DOCUMENT FROM PNSY
CODE 980, KITTERY ME

SATISFACTORY TO DATE: 05/09/16

DES: DWH | DRW: CHG | CHK: DWH

PM/DM: NATHAN LIBBY

BRANCH MANAGER: NATHAN MAHER

FEAD/PM&E: AMIN BAHROUR

FIRE PROTECTION: N/A

DEPARTMENT OF THE NAVY
NAVAL FACILITIES ENGINEERING COMMAND
PUBLIC WORKS DEPARTMENT – MAINE
PORTSMOUTH NAVAL SHIPYARD

NAVAL FACILITIES ENGINEERING COMMAND ~ MID-ATLANTIC
NAVAL SHIPYARD – PORTSMOUTH, NH
KITTERY, MAINE

STRUCTURAL REPAIRS
AT BERTHS 11A, 11B AND 11C

PHASING SECTION – SHEET 1 OF 2

EPROJECT NO.: 1356489

CONSTR. CONTR. NO.
N40085–XX–C–XXXX

NAVFAC DRAWING NO.
12716012

SHEET 16 OF 144

G-302 | FP2-16-652

DRAWFORM REVISION: 10 OCTOBER 2014

FILE NAME: S:\1794\Active\179410203\VP-104A PNSY Lifting Study\VP-104A PNSY Lifting Study\02 CADD\01 General\FP2--16-652.dwg LAYOUT NAME: PHASING SECTION – SHEET 1 OF 2 PLOTTED: Friday, May 13, 2016 – 2:26pm USER: cgoodridge

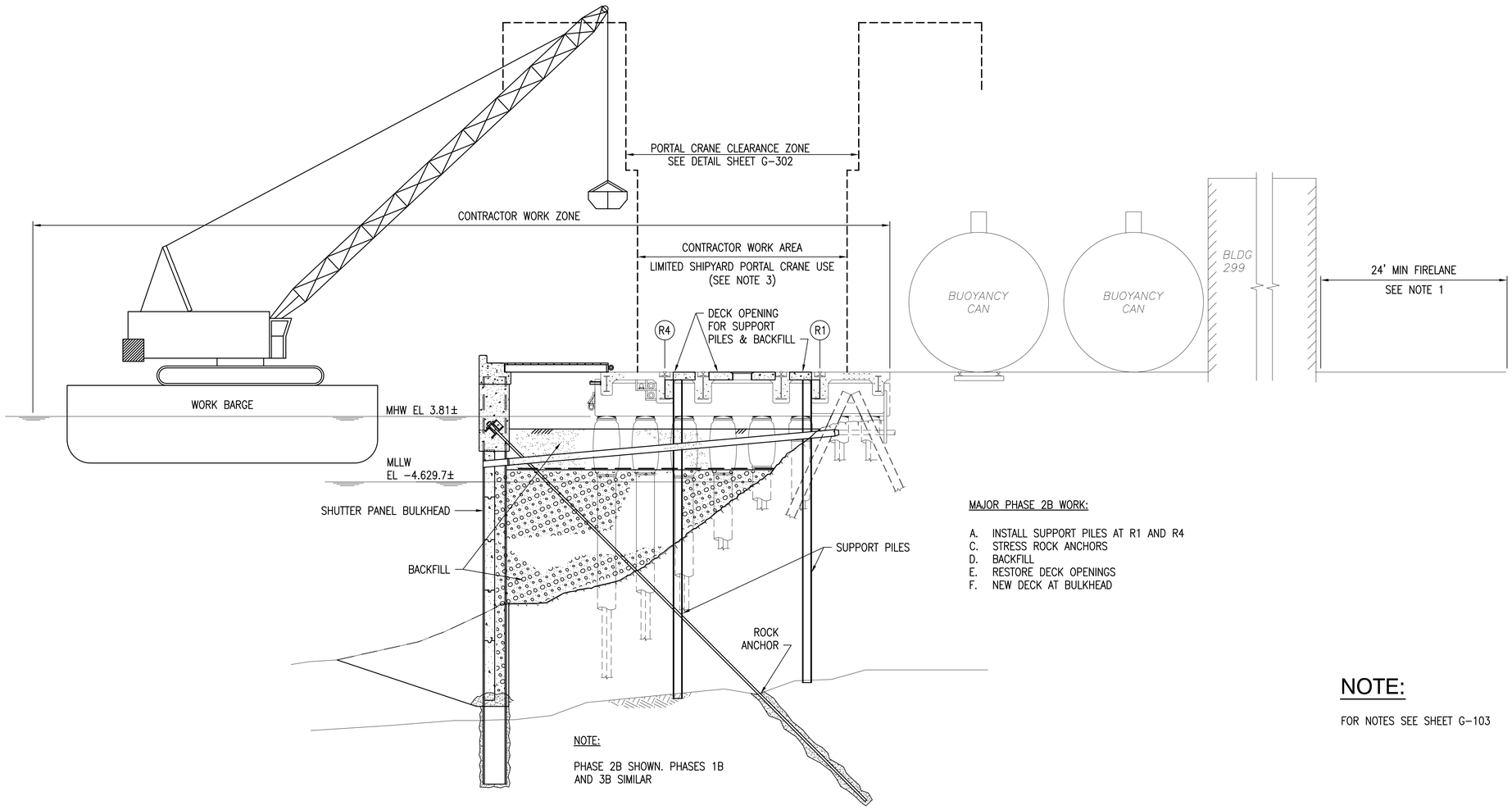

MAJOR PHASE 2B WORK:

A. INSTALL SUPPORT PILES AT R1 AND R4
C. STRESS ROCK ANCHORS
D. BACKFILL
E. RESTORE DECK OPENINGS
F. NEW DECK AT BULKHEAD

NOTE:

FOR NOTES SEE SHEET G-103

TYPICAL SECTION AT BERTH 11A - PHASE 2B (A1)

SCALE: 1/8" = 1'-0" G-102, G-103

GRAPHIC SCALE

1/8"=1'-0" 4' 0 4' 8' 12' 16'

CHECK GRAPHIC SCALE BEFORE USING

APPR | DATE | DESCRIPTION | SYM

NAVFAC

STATE OF MAINE
PAUL F. HARRINGTON
13061
LICENSED
PROFESSIONAL ENGINEER
3-7-16
SEAL

MNFST
A JOINT VENTURE
A/E INFO

APPROVED
David W. Grunfeld
FOR COMMANDER NAVFAC

ACTIVITY:
PER DOCUMENT FROM PNSY
CODE 980, KITTERY ME

SATISFACTORY TO DATE: 05/09/16

DES: DWH | DRW: CHG | CHK: DWH

PM/DM: NATHAN LIBBY

BRANCH MANAGER: NATHAN MAHER

FEAD/PM&E: AMIN BAHROUR

FIRE PROTECTION: N/A

DEPARTMENT OF THE NAVY
NAVAL FACILITIES ENGINEERING COMMAND
PUBLIC WORKS DEPARTMENT - MAINE
PORTSMOUTH NAVAL SHIPYARD

NAVAL FACILITIES ENGINEERING COMMAND ~ MID-ATLANTIC
NAVAL SHIPYARD - PORTSMOUTH, NH

KITTERY, MAINE

STRUCTURAL REPAIRS
AT BERTHS 11A, 11B AND 11C

PHASING SECTION - SHEET 2 OF 2

EPROJECT NO.: 1356489

CONSTR. CONTR. NO.
N40085-XX-C-XXXX

NAVFAC DRAWING NO.
12716013

SHEET 17 OF 144

G-303 | FP2-16-653

DRAWFORM REVISION: 10 OCTOBER 2014

FILE NAME: S:\1794\Active\179410203\r\TP-104A PNSY Lifting Study\TP-104A PNSY Lifting Study\02 CADD\01 General\FP2-16-653.dwg LAYOUT NAME: PHASING SECTION - SHEET 2 OF 2 PLOTTED: Friday, May 13, 2016 - 2:26pm USER: cgoodridge

LEGEND

AB	ABANDON
AC	ASBESTOS CONCRETE
AP	AIR PIPE
BIT	BITUMINOUS CONCRETE
BP	BREAKER PANEL
CLF	CHAIN LINK FENCE
CONC	CONCRETE
CIP	CAST IRON PIPE
CP	CONCRETE PAD
CPPS	CRANE PARKING POWER STATION
CPP	CORRUGATED PLASTIC PIPE
CU	CONNECTION UNKNOWN
D(S)	DRAIN SMALL
D(M)	DRAIN MEDIUM
ELEC	ELECTRIC
EM	ELECTRIC METER
EMH	ELECTRIC MANHOLE
EOP	EDGE OF PAVEMENT
EB	ELECTRIC BOX
EC	ELECTRIC CABINET
EP	ELECTRIC PIPE
FA	FIRE ALARM
GRAN	GRANITE
HTFP	HEAT TRACE FREEZE PANEL
HH	HANDHOLE
HP	HIGH PRESSURE
I	INVERT ELEVATION
MH	MANHOLE
MP	METAL PLATE
(M)	MARK
NA	NO ACCESS
NPV	NO PIPE VISIBLE
PB	POWER BOX
PVC	POLYVINYL CHLORIDE
PW	PURE WATER
RCP	REINFORCED CONCRETE PIPE
(R)	RECORD
R	RIM ELEVATION
SGC	SLOPED GRANITE CURB
SMH	SEWER MANHOLE
SP	STEAM PIPE
S	SUMP
SSPW	STAINLESS STEEL PURE WATER LINE
SVP	STEAM VENT PIPE
TOB	TOP OF BELL
TOS	TOP OF SILT
TOE	TOP OF ELBOW
TPB	TELEPHONE POWER BOX
UNK	UNKNOWN UTILITY
VP	VERTICAL PIPE
VSP	VERTICAL SEWER PIPE
VWP	VERTICAL WATER PIPE
VCP	VITREOUS CLAY PIPE
WAP	WATER ACCESS PIPE

	CURBING (TYPE)
CB	CATCH BASIN
	DECIDUOUS TREE/SIZE
GV	GAS GATE
	HYDRANT
	FENCE
	GUARD POST
	LIGHT POLE
	SIGN
	SURVEY CONTROL STATION
WV	WATER GATE
D	DRAIN MANHOLE
E	ELECTRIC MANHOLE
OT	OTHER MANHOLE
S	SEWER MANHOLE
ST	STEAM MANHOLE
T	TELEPHONE MANHOLE
E	ELECTRIC LINE
FM	FORCE MAIN
FW	FRESH WATER LINE
SD	STORM DRAIN LINE
ST	STEAM LINE
SS	SANITARY SEWER LINE
	AREAS WITH SHIPYARD TEMPORARY STRUCTURES AND EQUIPMENT

NOTES

1. COORDINATES, IN US SURVEY FEET, ARE REFERENCED TO THE NORTH AMERICAN DATUM OF 1983 (NAD 83), MAINE STATE PLANE COORDINATES (WEST ZONE), AS DEFINED BY VARIOUS POINTS ESTABLISHED BY CIVIL CONSULTANTS IN 2002.

2. ELEVATIONS, IN US SURVEY FEET ARE REFERENCED TO THE NORTH AMERICIAN VERTICAL DATUM OF 1988 (NAVD 88) DEFINED BY BENCHMARKS ESTABLISHED BY CIVIL CONSULTANTS IN 2002.

3. A GEOPHYSICAL SURVEY OF THIS SITE WAS PERFORMED DECEMBER 4, 5, 8 AND 16 , 2014 BY HAGER–RICHTER GEOSCIENCE INC. THEY CONDUCTED THE UTILITY SURVEY IN CONFORMANCE WITH QUALITY LEVEL B SURVEY AS OUTLINED IN THE CI/ASCE 38–02, "STANDARD GUIDELINE FOR THE COLLECTION AND DEPICTION OF EXISTING SUBSURFACE UTILITY DATA." THE INVESTIGATION WAS CONDUCTED IN ACCESSIBLE PORTIONS OF THE DRY DOCK #1 AREA USING BOTH GROUND PENETRATING RADAR (GPR) AND PRECISION UTILITY LOCATION (PUL) METHODS. THE LOCATIONS OF DETECTED FEATURES WERE MARKED ON THE GROUND WITH COLOR CODED PAINT USING THE APWA COLOR SYSTEM AT THE TIME OF THE GEOPHYSICAL SURVEY FOR LATER CONVENTIONAL SURVEYING BY SMC.

4. SUBSURFACE UTILITY LINES, AS SHOWN HEREON, WERE COMPILED ACCORDING TO SURFACE FEATURES AND GEOPHYSICAL SURVEY MARK OUTS. AVAILABLE RECORD INFORMATION AND THEIR LOCATIONS ARE APPROXIMATE ONLY. ACTUAL LOCATIONS MUST BE DETERMINED IN THE FIELD. THE SUFFIX (R) DENOTES UTILITIES WHICH WERE COMPILED FROM RECORD INFORMATION ONLY AND WERE EITHER NOT FOUND OR FOUND BUT NOT ACCESSIBLE DURING THE SURVEY. RECORD (R) UTILITY INFORMATION IS ALSO SHOWN IF IT IS SIGNIFICANTLY DIFFERENT FROM SURVEY DATA.

   BEFORE DESIGNING FUTURE CONNECTIONS, THE APPROPRIATE UTILITIES MUST BE CONSULTED.

   THE CONTRACTOR/EXCAVATOR SHALL NOTIFY DIG SAFE (1–888–344–7233) AT LEAST 14 CALENDAR DAYS, BUT NO MORE THAN 30 CALENDAR DAYS PRIOR TO THE COMMENCEMENT OF THE EXCAVATION OR GROUND PENETRATING ACTIVITY. THE CONTRACTOR SHALL FULLY COMPLY WITH STATE OF MAINE "DIG SAFE" LAW (TITLE 23, MRSA 3360–A).

5. THE TOPOGRAPHY IS BASED UPON AN ON–THE–GROUND, INSTRUMENT SURVEY MADE IN NOVEMBER, DECEMBER, 2014 AND APRIL, 2015.

6. AREAS DELINEATED AS SHIPYARD TEMPORARY STRUCTURES AND EQUIPMENT HAD A HIGH DENSITY OF TEMPORARY BUILDINGS, STORAGE CONTAINERS, EQUIPMENT, STAGING MATERIALS, UTILITIES ETC.. THE LIMITS ARE SHOWN ON THE DRAWINGS. ACCESS FOR SURVEY WITHIN THESE AREAS WAS LIMITED.

5. THE TOPOGRAPHY IS BASED UPON AN ON–THE–GROUND, INSTRUMENT SURVEY MADE IN NOVEMBER, DECEMBER, 2014 AND APRIL, 2015.

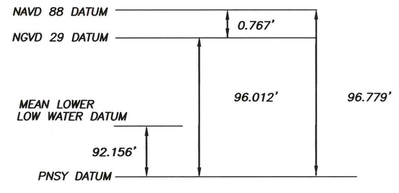

NGVD 29 ELEVATION = PNSY ELEVATION –96.012'

NAVD 88 ELEVATION = PNSY ELEVATION –96.779'

VERTICAL DATUM CONVERSION TABLE

GRAPHIC SCALE

0 20 40 60 80 FEET

GRAPHIC SCALE 1" = 20'

APPR | DATE | DESCRIPTION | SYM

NAVFAC

COMMONWEALTH OF MASSACHUSETTS
KEVIN HANLEY No. 31313 REGISTERED PROFESSIONAL LAND SURVEYOR

MNFST A JOINT VENTURE
A/E INFO

APPROVED
David W. Kingfield
FOR COMMANDER NAVFAC

ACTMTY:
PER DOCUMENT FROM PNSY CODE 980, KITTERY ME

SATISFACTORY TO DATE: 05/09/16

DES	--	DRW	VG	CHK	KH/NP

PM/DM: NATHAN LIBBY
BRANCH MANAGER: NATHAN MAHER
LEAD/PM&E: AMIN BAHROUR
FIRE PROTECTION: N/A

DEPARTMENT OF THE NAVY
NAVAL FACILITIES ENGINEERING COMMAND
PUBLIC WORKS DEPARTMENT - MAINE
PORTSMOUTH NAVAL SHIPYARD

NAVAL FACILITIES ENGINEERING COMMAND ~ MID-ATLANTIC
NAVAL SHIPYARD - PORTSMOUTH, NH
KITTERY, MAINE

STRUCTURAL REPAIRS AT BERTHS 11A, 11B AND 11C

EXISTING CONDITIONS–GENERAL NOTES & LEGEND

EPROJECT NO.: 1356489

CONSTR. CONTR. NO.
N40085–XX–C–XXXX

NAVFAC DRAWING NO.
12716014

SHEET 18 OF 144

V–101 | FP2–16–654

DRAWFORM REVISION: 10 OCTOBER 2014

FILE NAME: K:\PROJECTS\W14224 PNSY\DWG\W14224WSB11-12&13-REV-2.dwg LAYOUT NAME: V-101 PLOTTED: Friday, March 04, 2016 - 5:20pm USER: ivolasek

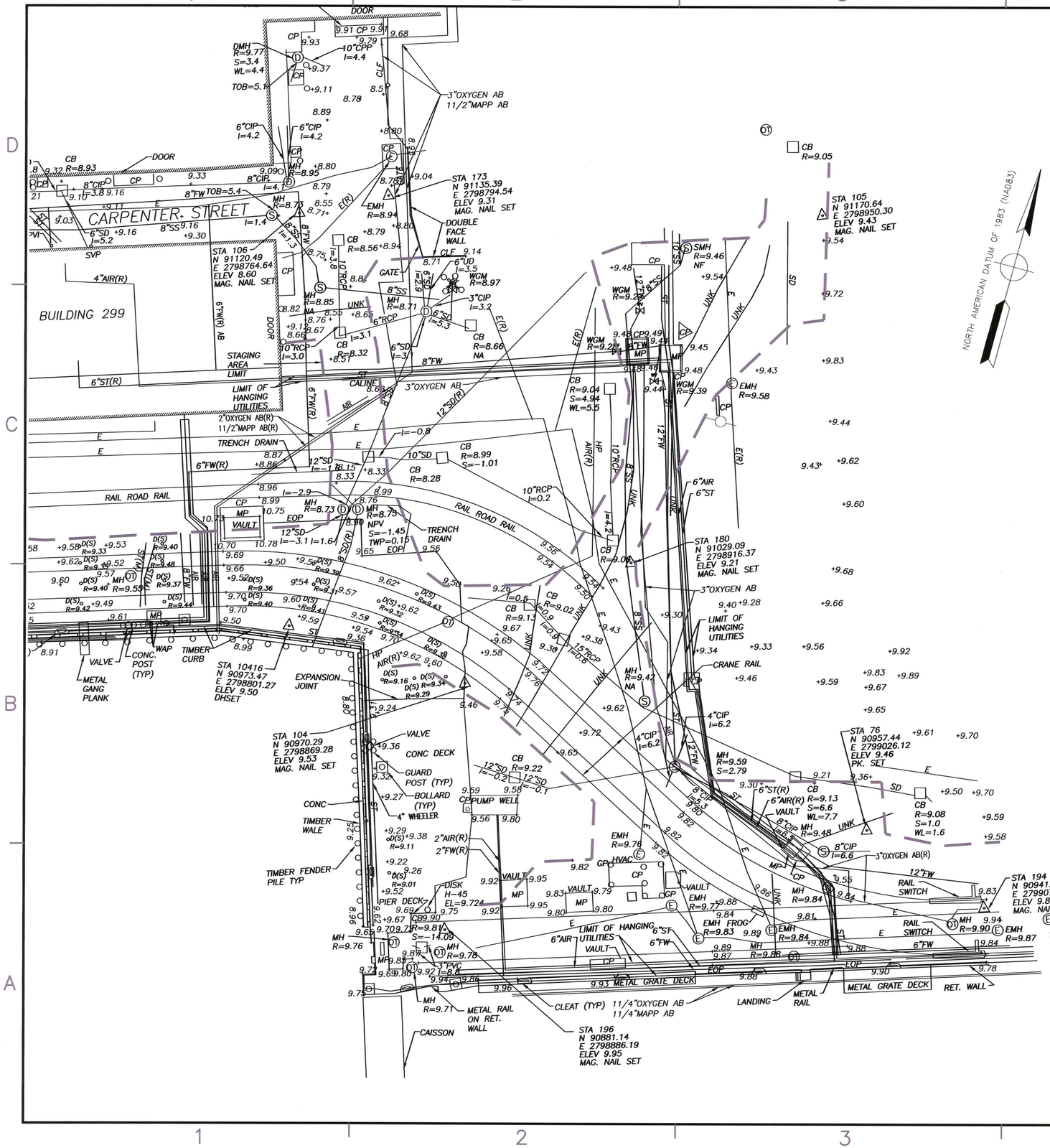

GRAPHIC SCALE

0 20 40 60 80 FEET

GRAPHIC SCALE 1" = 20'

APPR	DATE	DESCRIPTION	SYM

NAVFAC

COMMONWEALTH OF MASSACHUSETTS
KEVIN HANLEY
No. 31313
REGISTERED PROFESSIONAL LAND SURVEYOR

MN FST
A JOINT VENTURE
A/E INFO

APPROVED
David W. Krumfitz
FOR COMMANDER NAVFAC

ACTIVITY :
PER DOCUMENT FROM PNSY CODE 980, KITTERY ME

SATISFACTORY TO DATE : 05/09/16

DES	---	DRW	VG	CHK	KH/NP

PM/DM : NATHAN LIBBY
BRANCH MANAGER : NATHAN MAHER
FEAD/PM&E : AMIN BAHROUR
FIRE PROTECTION : N/A

DEPARTMENT OF THE NAVY
NAVAL FACILITIES ENGINEERING COMMAND
PUBLIC WORKS DEPARTMENT - MAINE
NAVAL FACILITIES ENGINEERING COMMAND – MID-ATLANTIC
NAVAL SHIPYARD – PORTSMOUTH, NH
PORTSMOUTH NAVAL SHIPYARD
KITTERY, MAINE

STRUCTURAL REPAIRS AT BERTHS 11A, 11B AND 11C

EXISTING CONDITIONS PLAN – SHEET 1 OF 3

EPROJECT NO.: 1356489
CONSTR. CONTR. NO.: N40085-XX-C-XXXX
NAVFAC DRAWING NO.: 12716015
SHEET 19 OF 144
V-102 FP2-16-655

DRAWFORM REVISION: 10 OCTOBER 2014

FILE NAME: K:\PROJECTS\W14204 PNSY\DWG\W142DWBS11-12&13-REV-2.dwg LAYOUT NAME: V-102 PLOTTED: Friday, March 04, 2016 - 5:22pm USER: ivetasek

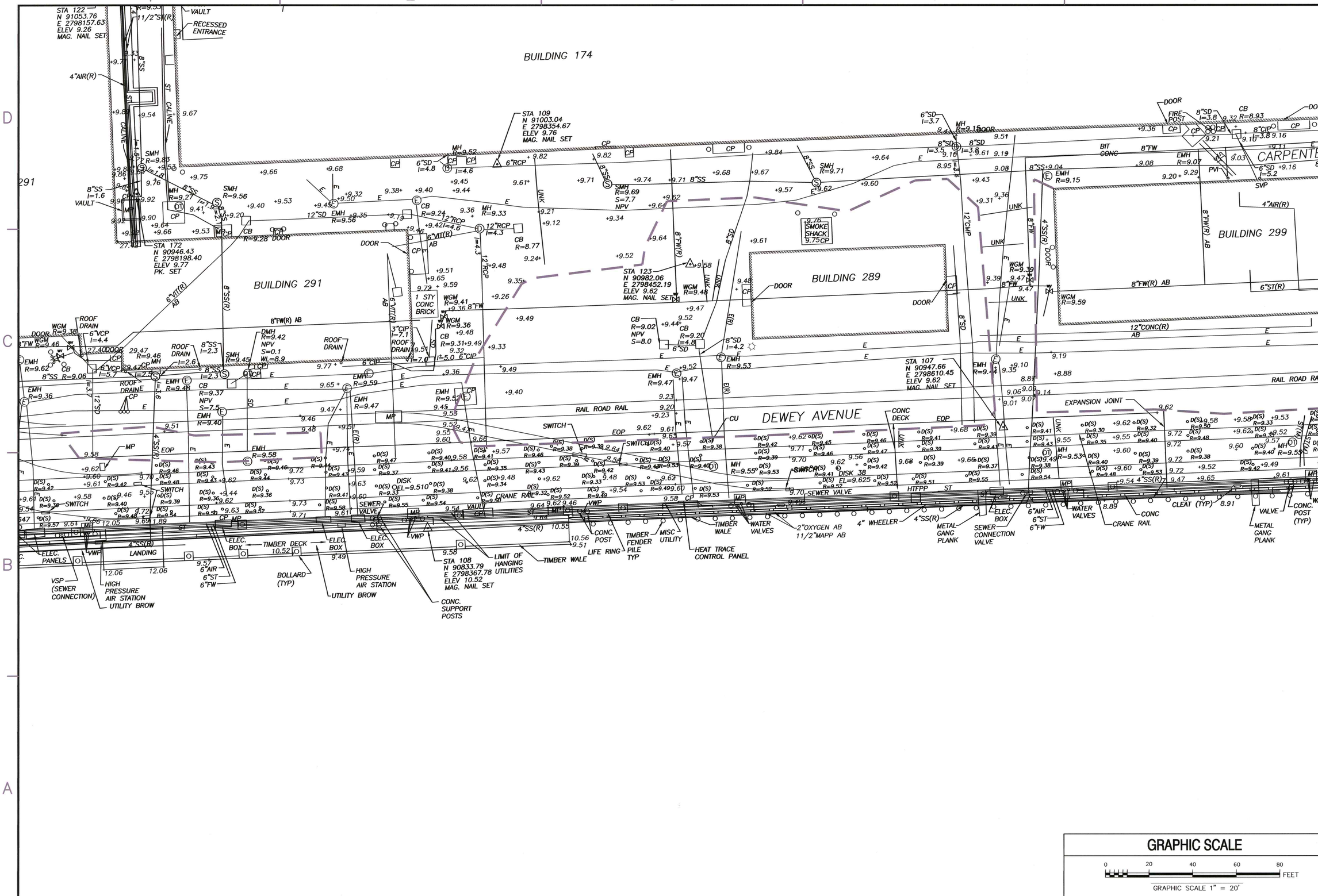

NAVFAC

MN FST A JOINT VENTURE

A/E INFO

APPROVED

FOR COMMANDER NAVFAC

ACTIVITY: PER DOCUMENT FROM PNSY CODE 980, KITTERY ME

SATISFACTORY TO DATE: 05/09/16

DES -- DRW VG CHK KH/NP

PM/DM: NATHAN LIBBY

BRANCH MANAGER: NATHAN MAHER

FEAD/PM&E: AMIN BAHROUR

FIRE PROTECTION: N/A

DEPARTMENT OF THE NAVY
NAVAL FACILITIES ENGINEERING COMMAND
PUBLIC WORKS DEPARTMENT - MAINE
NAVAL FACILITIES ENGINEERING COMMAND ~ MID-ATLANTIC
NAVAL SHIPYARD ~ PORTSMOUTH, NH
PORTSMOUTH NAVAL SHIPYARD
KITTERY, MAINE

STRUCTURAL REPAIRS AT BERTHS 11A, 11B AND 11C

EXISTING CONDITIONS PLAN – SHEET 2 OF 3

EPROJECT NO.: 1356489

CONSTR. CONTR. NO. N40085-XX-C-XXXX

NAVFAC DRAWING NO. 12716016

SHEET 20 OF 144

V-103 FP2-16-656

DRAWFORM REVISION: 10 OCTOBER 2014

FILE NAME: K:\PROJECTS\W14204 PNSY\DWG\W14204WS811-12&13-REV-2.dwg LAYOUT NAME: V-103 PLOTTED: Friday, March 04, 2016 - 5:23pm USER: ivalasek

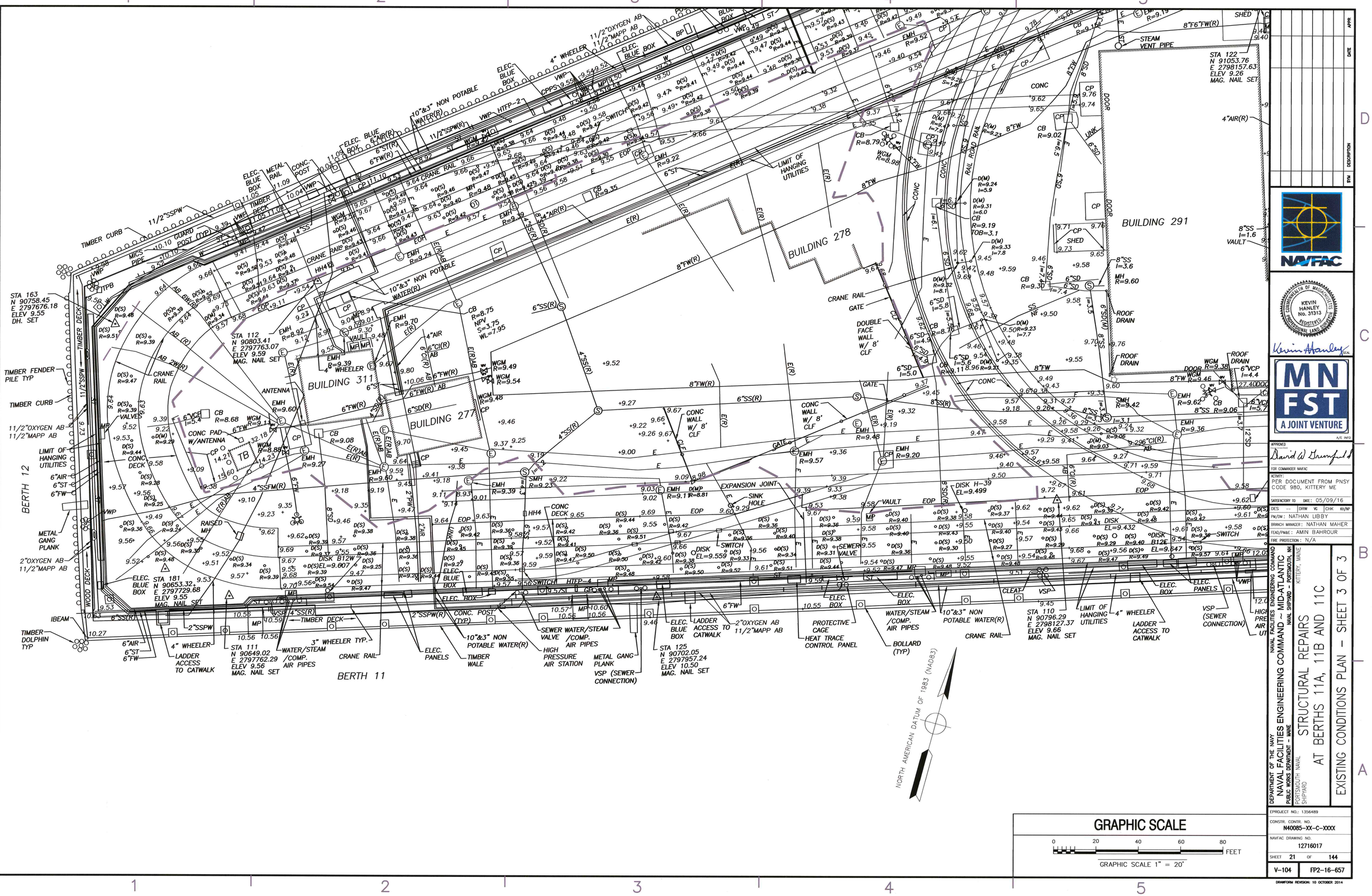

APPR	DATE	DESCRIPTION	MM

NAVFAC

COMMONWEALTH OF MASSACHUSETTS
KEVIN HANLEY No. 31313 REGISTERED PROFESSIONAL LAND SURVEYOR

MN FST
A JOINT VENTURE
A/E INFO

APPROVED
David W. Trumpfheller
FOR COMMANDER NAVFAC

ACTIVITY:
PER DOCUMENT FROM PNSY CODE 980, KITTERY ME

SATISFACTORY TO DATE: 05/09/16

DES	---	DRW	VG	CHK	KH/MP

PM/DM: NATHAN LIBBY
BRANCH MANAGER: NATHAN MAHER
LEAD/PM&E: AMIN BAHROUR
FIRE PROTECTION: N/A

DEPARTMENT OF THE NAVY
NAVAL FACILITIES ENGINEERING COMMAND – MID-ATLANTIC
NAVAL FACILITIES ENGINEERING COMMAND
PUBLIC WORKS DEPARTMENT – MAINE
NAVAL SHIPYARD – PORTSMOUTH, NH
KITTERY, MAINE
PORTSMOUTH NAVAL SHIPYARD

STRUCTURAL REPAIRS AT BERTHS 11A, 11B AND 11C

EXISTING CONDITIONS PLAN – SHEET 3 OF 3

EPROJECT NO.: 1356489

CONSTR. CONTR. NO.
N40085-XX-C-XXXX

NAVFAC DRAWING NO.
12716017

SHEET 21 OF 144

V-104 | FP2-16-657

DRAWFORM REVISION: 10 OCTOBER 2014

FILE NAME: K:\PROJECTS\W14204 PNSY\DWG\W14204NSB11-12&13-REV-2.dwg LAYOUT NAME: V-104 PLOTTED: Friday, March 04, 2016 – 5:24pm USER: lvolasek

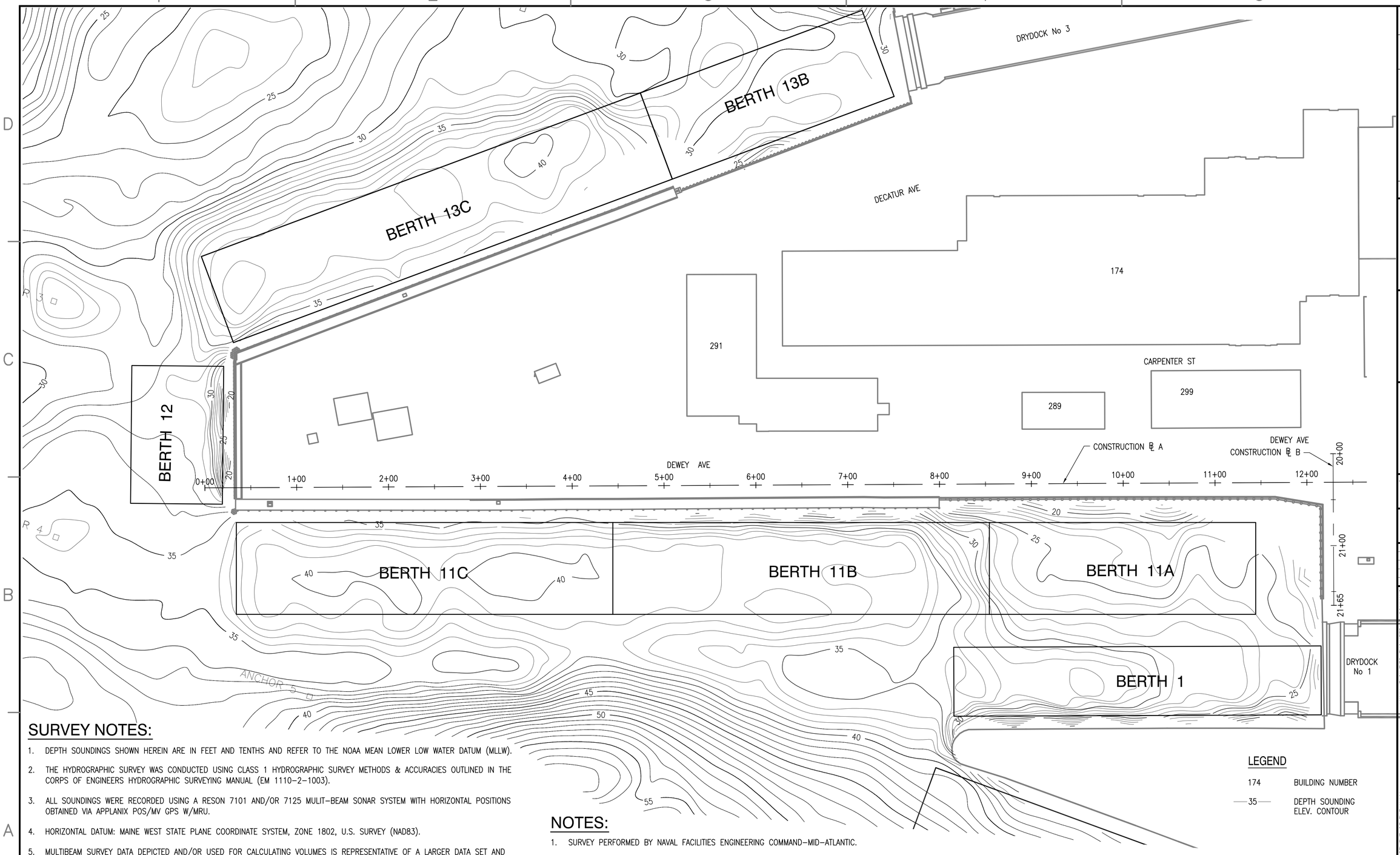

SURVEY NOTES:

1. DEPTH SOUNDINGS SHOWN HEREIN ARE IN FEET AND TENTHS AND REFER TO THE NOAA MEAN LOWER LOW WATER DATUM (MLLW).
2. THE HYDROGRAPHIC SURVEY WAS CONDUCTED USING CLASS 1 HYDROGRAPHIC SURVEY METHODS & ACCURACIES OUTLINED IN THE CORPS OF ENGINEERS HYDROGRAPHIC SURVEYING MANUAL (EM 1110-2-1003).
3. ALL SOUNDINGS WERE RECORDED USING A RESON 7101 AND/OR 7125 MULIT-BEAM SONAR SYSTEM WITH HORIZONTAL POSITIONS OBTAINED VIA APPLANIX POS/MV GPS W/MRU.
4. HORIZONTAL DATUM: MAINE WEST STATE PLANE COORDINATE SYSTEM, ZONE 1802, U.S. SURVEY (NAD83).
5. MULTIBEAM SURVEY DATA DEPICTED AND/OR USED FOR CALCULATING VOLUMES IS REPRESENTATIVE OF A LARGER DATA SET AND HAS BEEN PROCESSED USING HYPACK/HYSWEEP SOFTWARE AS FOLLOWS:
   - SOUNDING DATA FOR DISPLAY:
     CELL SIZE: 20'x20', SOUNDING POSITION: CENTER OF CELL. CELL STATISTICS: AVERAGE DEPTH
   - SOUNDING DATA FOR VOLUME CALCULATIONS:
     CELL SIZE: 5'x5', SOUNDING POSITION: CENTER OF CELL, CELL STATISTICS: AVERAGE DEPTH
6. SURVEY DATE(S) APRIL 23-26, 2015.

NOTES:

1. SURVEY PERFORMED BY NAVAL FACILITIES ENGINEERING COMMAND-MID-ATLANTIC.
2. SURVEY PROVIDED BY PWD-ME. PORTSMOUTH NAVAL SHIPYARD.
3. SEE DRAWING V-101 FOR CONVERSION FROM MEAN LOWER LOW WATER TO NAVD 88.

HYDROGRAPHIC SURVEY PLAN

SCALE: 1" = 50'

PLAN NORTH

LEGEND

174	BUILDING NUMBER
35	DEPTH SOUNDING ELEV. CONTOUR

GRAPHIC SCALE

1"=50' 50' 0 50' 100'

CHECK GRAPHIC SCALE BEFORE USING

APPR	DATE	DESCRIPTION	STM

NAVFAC

COMMONWEALTH OF MASSACHUSETTS
DAVID P. ANDERSON
CIVIL
No. 37119
3/7/16
SEAL

MN FST
A JOINT VENTURE
A/E INFO

APPROVED
David W. Grunfeld
FOR COMMANDER NAVFAC

ACTIVITY:
PER DOCUMENT FROM PNSY CODE 980, KITTERY ME

SATISFACTORY TO DATE: 05/09/16

DES: MN | DRW: HBF | CHK: MN

PM/DM: NATHAN LIBBY

BRANCH MANAGER: NATHAN MAHER

FEAD/PM&E: AMIN BAHROUR

FIRE PROTECTION: N/A

DEPARTMENT OF THE NAVY
NAVAL FACILITIES ENGINEERING COMMAND
PUBLIC WORKS DEPARTMENT - MAINE
PORTSMOUTH NAVAL SHIPYARD

NAVAL FACILITIES ENGINEERING COMMAND
NAVAL SHIPYARD - PORTSMOUTH, NH
KITTERY, MAINE

STRUCTURAL REPAIRS
AT BERTHS 11A, 11B AND 11C

HYDROGRAPHIC SURVEY PLAN

EPROJECT NO.: 1356489

CONSTR. CONTR. NO.
N40085-XX-C-XXXX

NAVFAC DRAWING NO.
12716018

SHEET 22 OF 144

V-105 | FP2-16-658

DRAWFORM REVISION: 10 OCTOBER 2014

FILE NAME: R:\TP-1044 PNSY Lifting Study\02 CADD\03 Survey\FP2-16-658.dwg LAYOUT NAME: HYDROGRAPHIC SURVEY PLAN PLOTTED: Monday, March 07, 2016 - 9:09pm USER: Goodri_C

GENERAL NOTES:

1. THE FOLLOWING HAZARDOUS MATERIAL ABATEMENT PLANS HAVE BEEN PREPARED TO INFORM THE CONTRACTOR OF THE PRESENCE OF HAZARDOUS MATERIALS ON THE PIER, AND ARE BASED ON THE FINDINGS OF A HAZARDOUS MATERIALS SURVEY PERFORMED BY WILCOX & BARTON ON NOVEMBER 3, 2014, MARCH 13, 2015 AND FEBRUARY 17, 2016.
2. ASBESTOS AND HAZARDOUS MATERIALS REQUIRING ABATEMENT TO SUPPORT THE BERTH 11 REPAIRS ARE DEPICTED ON SHEET H-101 AND LISTED IN THE SCHEDULES OF ASBESTOS AND HAZARDOUS MATERIALS TO BE ABATED. THE CONTRACTOR IS RESPONSIBLE FOR VERIFYING THE QUANTITY AND LOCATIONS OF ALL ASBESTOS AND HAZARDOUS MATERIALS ON THE WHARF AND DETERMINING WHETHER OR NOT THE MATERIAL WILL BE IMPACTED BY THE RENOVATION. ALL ASBESTOS AND HAZARDOUS MATERIALS WITHIN THE SCOPE OF THE RENOVATION MUST BE ABATED.
3. HAZARDOUS MATERIALS ARE TO BE HANDLED AND DISPOSED IN ACCORDANCE WITH THE SPECIFICATIONS AND PLANS.

ASBESTOS NOTES:

1. ASBESTOS CONTAINING MATERIALS ARE TO BE ABATED IN ACCORDANCE WITH SPECIFICATION 02 82 16.00 20 "ENGINEERING CONTROL OF ASBESTOS CONTAINING MATERIALS (PWD ME)" AND THESE ABATEMENT PLANS.

ASBESTOS CONTAINING MATERIALS TO BE ABATED	QUANTITY
BLACK TAR AT BOLT HOLES ON FABRICATED CLEATS AT EAST END	3 CLEATS 1 CF TOTAL

MATERIALS TESTED FOR ASBESTOS	TEM RESULTS
LIGHT GREY CAULKING IN CONCRETE CRACKS BETWEEN CRANE RAIL	ND
GREY CAULKING AT BOLT HOLES IN BASE OF BOLLARDS	ND
LIGHT GREY CAULKING /SEALANT AT CAST CLEAT ANCHOR BOLT HOLES	ND
BLACK TAR AT BOLT HOLES ON TIMBER CURB BERTH 11A	ND
BLACK TAR AT BOLT HOLES ON FABRICATED CLEAT AT EAST END	2.2% CHRYSOTILE

LEAD NOTES:

1. PAINT WITH LEAD (PWL) AND LEAD CONTAINING MATERIALS (LCM) ARE TO BE MANAGED IN ACCORDANCE WITH THESE SPECIFICATIONS AND PLANS.
2. IF THERE ARE ANY MODIFICATIONS TO THE BERTH 11 REPAIR SCOPE OF WORK, THE CONTRACTOR IS RESPONSIBLE FOR VERIFYING THE PRESENCE OR ABSENCE OF PWL OR LCM TO BE IMPACTED BY THE MODIFICATIONS AND FOLLOW THE APPROPRIATE LEAD SAFE WORK PRACTICES.
3. LEAD IS CONTAINED IN PAINTED SURFACES ON THE WHARF. ANY DETECTION OF LEAD REQUIRES OSHA WORK PRACTICES. RESULTS OF THE PWL SURVEY ARE SUMMARIZED IN THE FOLLOWING SCHEDULE:

ITEMS WITH LEAD CONTAINING/BASED PAINT TO BE REMOVED AND DISPOSED OF	QUANTITY
FABRICATED CLEATS ON BERTH 11A	3 EA
PAVEMENT STRIPING ON CONCRETE DECK	210 SF

PAINT SYSTEM	LEAD CONTENT (% WEIGHT)
YELLOW ON CONCRETE RETAINING WALL IN AREA NORTH OF DRY DOCK NO. 1	0.024
YELLOW CRANE SAFETY MARKINGS ON CONCRETE DECK STA 12+50 +-	0.53
YELLOW ON BOLLARDS	ND (<0.031)
RED CRANE SAFETY MARKING ON ASPHALT ADJACENT TO DRY DOCK NO. 1 CAISSON (STA 21+75+-)	ND (<0.030)
RED CRANE SAFETY MARKING ON CONCRETE DECK STA 1+40+-	0.26
YELLOW ON CONCRETE STRUCTURE STA 11+75+- (CAPSTAN FOUNDATION)	0.11
AQUA OVER BLUE ON METAL ELECTRICAL BOXES	ND (<0.029)
YELLOW ON FABRICATED BOLLARD (BERTH 11 BENT 14)	ND (<0.013)
YELLOW ON FABRICATED BOLLARD (BERTH 11 BENT 25)	ND (<0.027)
YELLOW OVER TEAL ON CAST CLEAT (BERTH 11A)	ND (<0.011)
YELLOW ON FABRICATED CLEAT (BERTH 11A)	9.6
YELLOW ON FABRICATED CLEAT (BERTH 11 BENT 24/25)	ND (<0.019)
GREEN OVER GREY PAINT ON EFFLUENT TANK PLATFORM	ND (<0.018)
COAL TAR ON MASTER PILE (BERTH 11 BENT 14)	ND (<0.016)

TREATED TIMBER NOTES:

1. TIMBER FENDER PILES, WALES, CHOCKS, RUB STRIPS AND CURB ARE TREATED WITH EITHER CCA OR CREOSOTE. DURING REPAIRS, THESE MATERIALS SHALL BE DISPOSED OF IN ACCORDANCE WITH LOCAL, STATE AND FEDERAL REGULATIONS.

ABBREVIATIONS:

<	LESS THAN
%	PERCENT
"	INCHES
ACM	ASBESTOS-CONTAINING MATERIAL
CF	CUBIC FEET
LF	LINEAR FEET
ND	NOT DETECTED
PWL	PAINT WITH LEAD
LCM	LEAD CONTAINING MATERIAL
CFR	CODE OF FEDERAL REGULATIONS
OSHA	OCCUPATIONAL, SAFETY & HEALTH ADMINISTRATION
TEM	TRANSMISSION ELECTRON MICROSCOPY

APPR | DATE | DESCRIPTION | STM

NAVFAC

STATE OF MAINE ROBERT W. ROOKS No. 11603 LICENSED PROFESSIONAL ENGINEER 3/3/16 SEAL

MN FST A JOINT VENTURE A/E INFO

APPROVED David W. Grunfeld FOR COMMANDER NAVFAC

ACTIVITY: PER DOCUMENT FROM PNSY CODE 980, KITTERY ME

SATISFACTORY TO DATE: 05/09/16

DES MN | DRW CHG | CHK RWR

PM/DM: NATHAN LIBBY

BRANCH MANAGER: NATHAN MAHER

FEAD/PM&E: AMIN BAHROUR

FIRE PROTECTION: N/A

DEPARTMENT OF THE NAVY
NAVAL FACILITIES ENGINEERING COMMAND
PUBLIC WORKS DEPARTMENT - MAINE
NAVAL FACILITIES ENGINEERING COMMAND - MID-ATLANTIC
NAVAL SHIPYARD - PORTSMOUTH, NH
PORTSMOUTH NAVAL SHIPYARD
KITTERY, MAINE

STRUCTURAL REPAIRS AT BERTHS 11A, 11B AND 11C

HAZARDOUS MATERIAL GENERAL NOTES

EPROJECT NO.: 1356489

CONSTR. CONTR. NO. N40085-XX-C-XXXX

NAVFAC DRAWING NO. 12716019

SHEET 23 OF 144

H-001 | FP2-16-659

DRAWFORM REVISION: 10 OCTOBER 2014

FILE NAME: R:\TP-104A PNSY Lifting Study\02 CADD\02 Hazardous\FP2-16-659.dwg LAYOUT NAME: HAZARDOUS MATERIAL GENERAL NOTES PLOTTED: Monday, March 07, 2016 - 9:09pm USER: Goodri_C

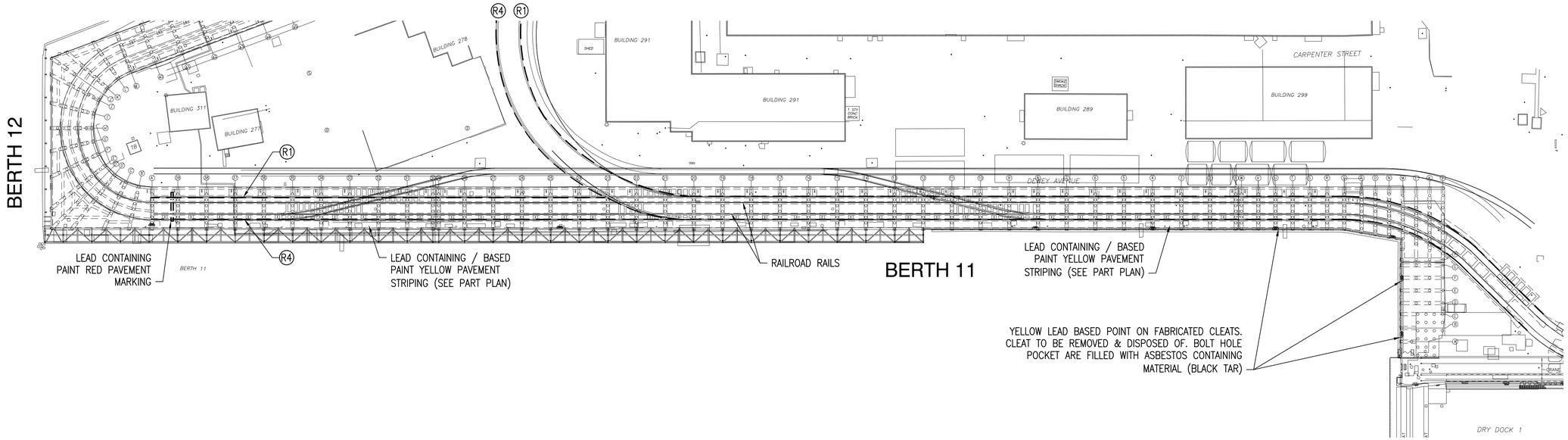

ABATEMENT PLAN

SCALE: 1"=50'

PLAN NORTH

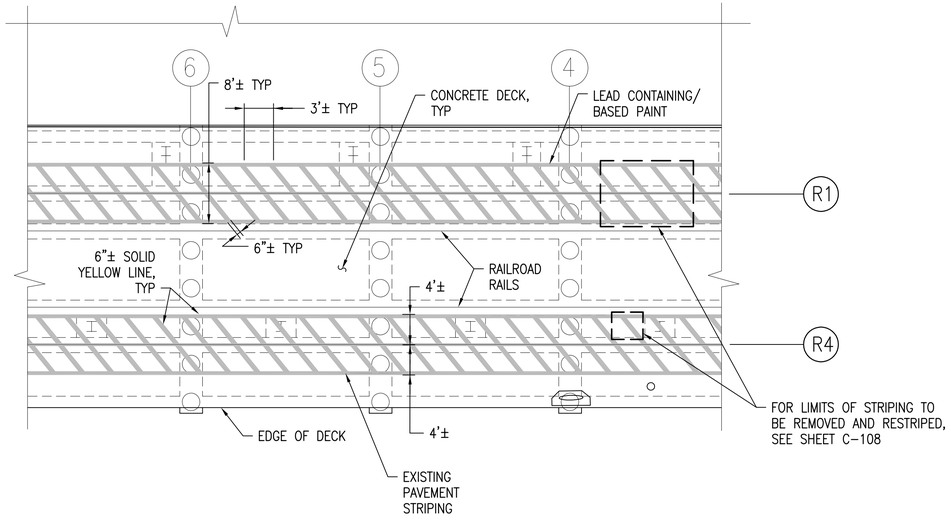

PART DECK PLAN

SCALE: 1"=10'

PLAN NORTH

NOTE:

1. SEE SHEET H-001 FOR HAZARDOUS MATERIAL GENERAL NOTES.

LEGEND:

(A) BENT NUMBER

(R4) CRANE RAIL IDENTIFICATION

1"=50' 50' 0 50' 100'

GRAPHIC SCALE

1"=10' 10' 0 10' 20'

CHECK GRAPHIC SCALE BEFORE USING

APPR	DATE	DESCRIPTION	STM

NAVFAC

STATE OF MAINE ROBERT W. ROOKS No. 11603 LICENSED PROFESSIONAL ENGINEER 3/3/16 SEAL

MNFST A JOINT VENTURE A/E INFO

APPROVED: David W. Grunfeld FOR COMMANDER NAVFAC

ACTIVITY: PER DOCUMENT FROM PNSY CODE 980, KITTERY ME

SATISFACTORY TO DATE: 05/09/16

DES MH | DRW CHG | CHK RWR

PM/DM: NATHAN LIBBY

BRANCH MANAGER: NATHAN MAHER

LEAD/PM&E: AMIN BAHROUR

FIRE PROTECTION: N/A

DEPARTMENT OF THE NAVY
NAVAL FACILITIES ENGINEERING COMMAND
PUBLIC WORKS DEPARTMENT - MAINE
PORTSMOUTH NAVAL SHIPYARD

NAVAL FACILITIES ENGINEERING COMMAND ~ MID-ATLANTIC
NAVAL SHIPYARD - PORTSMOUTH, NH

STRUCTURAL REPAIRS AT BERTHS 11A, 11B AND 11C

KITTERY, MAINE

HAZARDOUS MATERIAL ABATEMENT

EPROJECT NO.: 1356489

CONSTR. CONTR. NO. N40085-XX-C-XXXX

NAVFAC DRAWING NO. 12716020

SHEET 24 OF 144

H-101 | FP2-16-660

DRAWFORM REVISION: 10 OCTOBER 2014

FILE NAME: R:\TP-104A PNSY Lifting Study\02 CAD\02 Hazardous\FP2-16-660.dwg LAYOUT NAME: HAZARDOUS MATERIAL ABATEMENT PLOTTED: Monday, March 07, 2016 - 9:09pm USER: Goodr_C

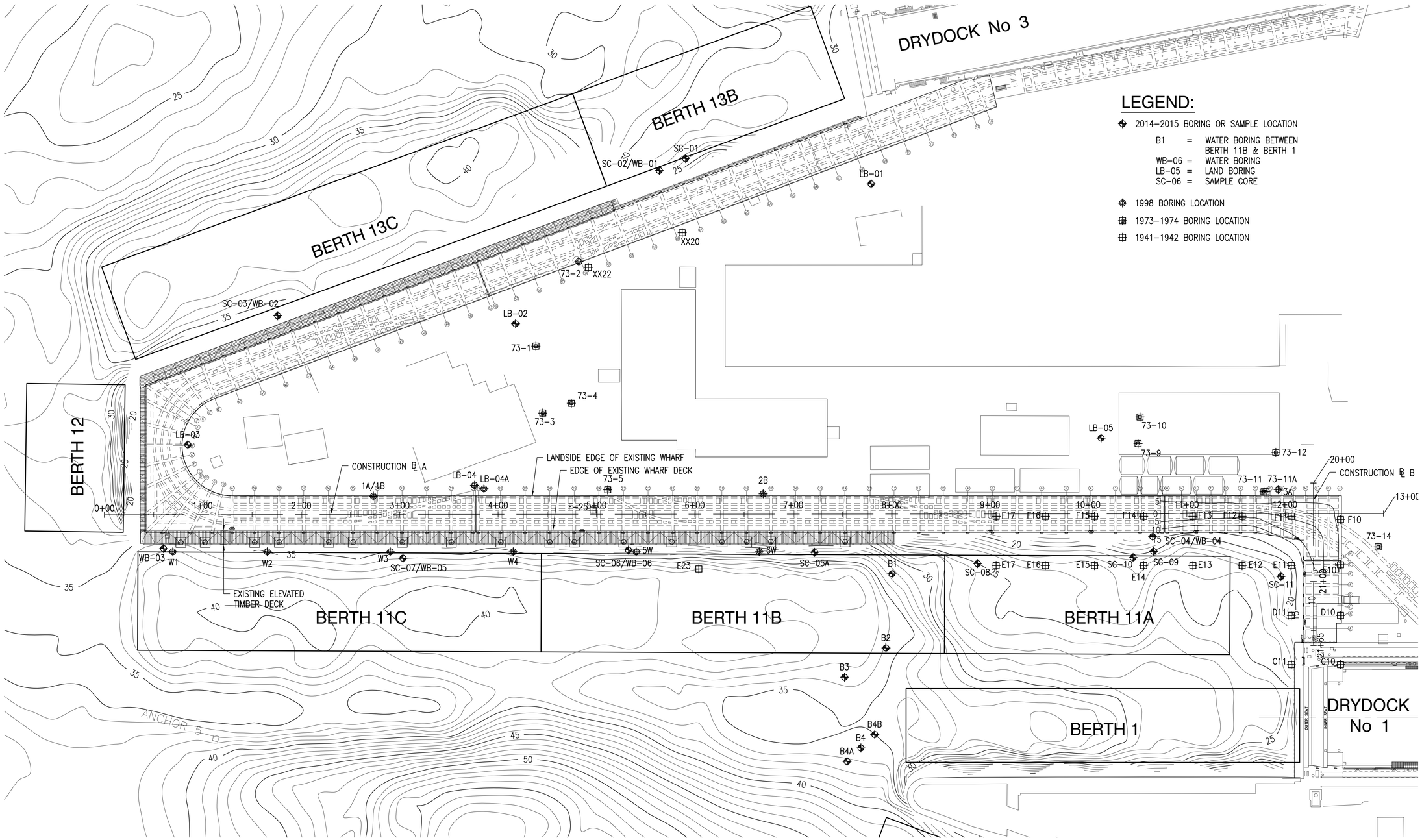

LEGEND:

- 2014–2015 BORING OR SAMPLE LOCATION
  - B1 = WATER BORING BETWEEN BERTH 11B & BERTH 1
  - WB-06 = WATER BORING
  - LB-05 = LAND BORING
  - SC-06 = SAMPLE CORE
- 1998 BORING LOCATION
- 1973–1974 BORING LOCATION
- 1941–1942 BORING LOCATION

BORING LOCATION PLAN

SCALE: 1" = 50'

PLAN NORTH

NOTES:

1. TEXT NEXT TO SYMBOL IS BORING IDENTIFICATION. SEE B-601 THRU B-617 FOR BORING LOGS.
2. HISTORICAL BORING LOGS (PRIOR TO 2014) ARE PROVIDED FOR INFORMATION ONLY AND MAY NOT REPRESENT CURRENT CONDITIONS.
3. DEPTH SOUNDINGS SHOWN HEREIN ARE IN FEET AND TENTHS AND REFER TO THE NOAA MEAN LOWER LOW WATER DATUM (MLLW).
4. SEE APPENDIX C, FINAL SEDIMENT ANALYSIS REPORT, OF THE SPECIFICATIONS FOR SAMPLE CORE LOGS

GRAPHIC SCALE

1"=50' 50' 0 50' 100'

CHECK GRAPHIC SCALE BEFORE USING

SYM	DESCRIPTION	DATE	APPR

NAVFAC

MARIO NICOLAZZO CIVIL No. 51724 COMMONWEALTH OF MASSACHUSETTS REGISTERED PROFESSIONAL ENGINEER

SEAL

MN FST A JOINT VENTURE

A/E INFO

APPROVED David W. Greenfield FOR COMMANDER NAVFAC

ACTIVITY: PER DOCUMENT FROM PNSY CODE 980, KITTERY ME

SATISFACTORY TO DATE: 05/09/16

DES MN DRW CHG CHK MN

PM/DM: NATHAN LIBBY

BRANCH MANAGER: NATHAN MAHER

FEAD/PM&E: AMIN BAHROUR

FIRE PROTECTION: N/A

DEPARTMENT OF THE NAVY
NAVAL FACILITIES ENGINEERING COMMAND
PUBLIC WORKS DEPARTMENT – MAINE
NAVAL FACILITIES ENGINEERING COMMAND ~ MID-ATLANTIC
NAVAL SHIPYARD – PORTSMOUTH, NH
PORTSMOUTH NAVAL SHIPYARD
KITTERY, MAINE

STRUCTURAL REPAIRS AT BERTHS 11A, 11B AND 11C

BORING LOCATION PLAN

EPROJECT NO.: 1356489

CONSTR. CONTR. NO. N40085-XX-C-XXXX

NAVFAC DRAWING NO. 12716021

SHEET 25 OF 144

B-101 FP2-16-661

DRAWFORM REVISION: 10 OCTOBER 2014

FILE NAME: S:\1794\Active\179410203\Y\TP-104A PNSY Lifting Study\TP-104A PNSY Lifting Study\02 CADD\04 Geotechnical\FP2-16-661.dwg LAYOUT NAME: BORING LOCATION PLAN PLOTTED: Friday, May 13, 2016 - 2:29pm USER: cgoodridge

TEST BORING REPORT — Boring No. B1

HALEY ALDRICH

Project	PNSY - DRYDOCK NO. 1 EXPANSION STUDY, KITTERY, MAINE
Client	FAY, SPOFFORD AND THORNDIKE, INC.
Contractor	NEW ENGLAND BORING CONTRACTORS, INC.
File No.	41242-100
Sheet No.	1 of 2
Start	February 5, 2015
Finish	February 11, 2015
Driller	S. Cooley
H&A Rep.	M. Dodson
Elevation	61.0 (est.)
Datum	PNSY
Location	See Plan

	Casing	Sampler	Barrel
Type	HW	S	NX
Inside Diameter (in.)	4.0	1.375	2.0
Hammer Weight (lb)	300	140	-
Hammer Fall (in.)	24	30	-

Drilling Equipment and Procedures
- Rig Make & Model: CME 45 Skid
- Bit Type: Roller Bit
- Drill Mud: None
- Casing: HW Drive to 3.4 ft.
- Hoist/Hammer: Cat-Head Safety Hammer
- PID Make & Model:

Depth (ft)	Sampler Blows per 6 in.	Sample No. & Rec. (in.)	Sample Depth (ft)	USCS Symbol	Stratum Change Elev/Depth (ft)	VISUAL-MANUAL IDENTIFICATION AND DESCRIPTION (Density/consistency, color, GROUP NAME, max. particle size†, structure, odor, moisture, optional descriptions GEOLOGIC INTERPRETATION)	Gravel % Coarse	Gravel % Fine	Sand % Coarse	Sand % Medium	Sand % Fine	% Fines	Dilatancy	Toughness	Plasticity	Strength
0						Note: No samples taken from 0 to 1.0 ft.										
	WOH 27	S1 7	1.0 2.0	SM	60.0 1.0	Very soft black (organic) silty SAND (SM), mps 0.1 in., no structure, faint organic hydrogen sulfide-like odor, wet -RIVER BOTTOM DEPOSITS-			5	5	50	40				
	57 50/2"	S1A 7	2.0 2.7	SP	59.0 2.0	Very dense yellow-brown poorly graded SAND with gravel (SP) -GLACIOFLUVIAL DEPOSITS-	20	25	10	15	25	5				
				GM	58.8 2.2	Very dense brown to light yellow-brown silty GRAVEL with sand (GM), mps 1.0 in., occasional visible intact rock matrix, occasionally entirely decomposed, no odor, wet -WEATHERED BEDROCK-	20	25	15	10	10	20				
					57.0 4.0	Note: Advanced roller bit to 4.0 ft. TOP OF BEDROCK 4.0 FT SEE CORE BORING REPORT FOR ROCK DETAILS										
5																
10																

Water Level Data

Date	Time	Elapsed Time (hr.)	Depth (ft) to: Bottom of Casing	Bottom of Hole	Water
	WATER AT LEVEL OF RIVER				

Sample ID: O - Open End Rod; T - Thin Wall Tube; U - Undisturbed Sample; S - Split Spoon Sample

Well Diagram: Riser Pipe; Screen; Filter Sand; Cuttings; Grout; Concrete; Bentonite Seal

Summary: Overburden (ft) 4.0; Rock Cored (ft) 10.8; Samples 2S, 3C; Boring No. B1

Field Tests: Dilatancy: R - Rapid S - Slow N - None; Toughness: L - Low M - Medium H - High; Plasticity: N - Nonplastic L - Low M - Medium H - High; Dry Strength: N - None L - Low M - Medium H - High V - Very High

†Note: Maximum particle size is determined by direct observation within the limitations of sampler size.
Note: Soil identification based on visual-manual methods of the USCS as practiced by Haley & Aldrich, Inc.

H&A-TEST BORING-09 REV HA-LIB09-BOS_MAN.GLB HA-TB+CORE+WELL-07-2 W FENCE.GDT G:\41242_PNSY\100\FIELD\GINT LOGS\2015-0218-HAI-TEST BORING B1-B4.GPJ Mar 20, 15

CORE BORING REPORT — Boring No. B1

HALEY ALDRICH

File No. 41242-100 — Sheet No. 2 of 2

Depth (ft)	Drilling Rate (min./ft)	Run No.	Run Depth (ft)	Recovery/RQD in.	Recovery/RQD %	Weathering	Elev./Depth (ft)	Visual Description and Remarks
								SEE TEST BORING REPORT FOR OVERBURDEN DETAILS
	10/3" 12/7"	C1	4.0 4.8	8 0	83 0	Moderate	57.0 4.0	Hard, light gray, slightly weathered to fresh, aphanitic to medium grained, QUARTZITE/PHYLLITE. Non-foliated. Primary joint set horizontal to dipping at low angles, very close to moderately spaced, rough, planar, discolored to slightly decomposed, primarily tight to occasionally open. Possible secondary joint set dipping at moderate angle, widely spaced, rough, planar, discolored, tight to partly open. Note: Losing significant water below 4.8 ft. Note: Barrel jammed at approximately 5.9 and 9.8 ft.
5	13 10 9 8 10	C2	4.8 9.8	55 29	92 48	Slight to Fresh		-KITTERY FORMATION-
10	10 12 13 14 14	C3	9.8 14.8	57 25	95 42	Slight to Fresh		Similar to above except primary joint set is very close to closely spaced.
15							46.2 14.8	BOTTOM OF EXPLORATION 14.8 FT
20								
25								
30								

H&A_CORE+WELL07-1 HA-LIB09-BOS_MAN.GLB HA-TB+CORE+WELL-07-1.GDT G:\41242_PNSY\100\FIELD\GINT LOGS\2015-0218-HAI-TEST BORING B1-B4.GPJ Mar 20, 15

TEST BORING REPORT — Boring No. B2

HALEY ALDRICH

Project	PNSY - DRYDOCK NO. 1 EXPANSION STUDY, KITTERY, MAINE
Client	FAY, SPOFFORD AND THORNDIKE, INC.
Contractor	NEW ENGLAND BORING CONTRACTORS, INC.
File No.	41242-100
Sheet No.	1 of 2
Start	February 11, 2015
Finish	February 12, 2015
Driller	B. Enos
H&A Rep.	M. Dodson
Elevation	56.0 (est.)
Datum	PNSY
Location	See Plan

	Casing	Sampler	Barrel
Type	HW/NW	S	NX
Inside Diameter (in.)	4.0 / 3.0	1.375	2.0
Hammer Weight (lb)	300	140	-
Hammer Fall (in.)	24	30	-

Drilling Equipment and Procedures
- Rig Make & Model: CME 45 Skid
- Bit Type: Roller Bit
- Drill Mud: None
- Casing: HW Driven to 9.9, NW Spun 11.5 ft.
- Hoist/Hammer: Cat-Head Safety Hammer
- PID Make & Model:

Depth (ft)	Sampler Blows per 6 in.	Sample No. & Rec. (in.)	Sample Depth (ft)	USCS Symbol	Stratum Change Elev/Depth (ft)	VISUAL-MANUAL IDENTIFICATION AND DESCRIPTION (Density/consistency, color, GROUP NAME, max. particle size†, structure, odor, moisture, optional descriptions GEOLOGIC INTERPRETATION)	Gravel % Coarse	Gravel % Fine	Sand % Coarse	Sand % Medium	Sand % Fine	% Fines	Dilatancy	Toughness	Plasticity	Strength
0	WOH/24" 5	S1 5	0.0 2.0	SM		Very loose dark gray black (organic) silty SAND (SM), mps 1.0 in., no structure, no odor, wet RIVER BOTTOM DEPOSITS-	5	5	10	20	45	15				
					53.5 2.5	Note: Drill action indicates stratum change 2.5 ft.										
5	13 9 6 9	S2 6	5.0 7.0	SW		Medium dense brown well graded SAND (SW), mps 0.4 in., no structure, no odor, wet -GLACIOFLUVIAL DEPOSITS-		5	15	25	55					
10					44.7 11.3	Note: Cobbles encountered from 9.9 - 11.3 ft. Cored through cobbles to advance boring. TOP OF BEDROCK 11.3 FT SEE CORE BORING REPORT FOR ROCK DETAILS										
15																
20																

Water Level Data

Date	Time	Elapsed Time (hr.)	Depth (ft) to: Bottom of Casing	Bottom of Hole	Water
	WATER AT LEVEL OF RIVER				

Sample ID: O - Open End Rod; T - Thin Wall Tube; U - Undisturbed Sample; S - Split Spoon Sample

Well Diagram: Riser Pipe; Screen; Filter Sand; Cuttings; Grout; Concrete; Bentonite Seal

Summary: Overburden (ft) 11.3; Rock Cored (ft) 10; Samples 2S, 2C; Boring No. B2

Field Tests: Dilatancy: R - Rapid S - Slow N - None; Toughness: L - Low M - Medium H - High; Plasticity: N - Nonplastic L - Low M - Medium H - High; Dry Strength: N - None L - Low M - Medium H - High V - Very High

†Note: Maximum particle size is determined by direct observation within the limitations of sampler size.
Note: Soil identification based on visual-manual methods of the USCS as practiced by Haley & Aldrich, Inc.

CORE BORING REPORT — Boring No. B2

HALEY ALDRICH

File No. 41242-100 — Sheet No. 2 of 2

Depth (ft)	Drilling Rate (min./ft)	Run No.	Run Depth (ft)	Recovery/RQD in.	Recovery/RQD %	Weathering	Elev./Depth (ft)	Visual Description and Remarks
								SEE TEST BORING REPORT FOR OVERBURDEN DETAILS
	3 3 4 3 4	C1	11.3 16.6	54 14	85 22	Fresh to Slight	44.7 11.3	Hard, fresh to slightly weathered, gray to dark gray, fine grained to aphanitic PHYLLITE. Foliation/bedding very thin, dipping at moderate to near high angles. Primary joint set dipping at moderate angles, close to moderately spaced, rough, planar, discolored with mineral staining/pyrite, tight to partly open. Breaks closely to moderately spaced at low to moderate angles. Note: Barrel jammed and core removed at 12.8, 14.3, 15.0 and 16.6 ft. -KITTERY FORMATION-
15	2 3 4 3	C2	16.6 21.3	53 50	94 89	Fresh to Slight		Similar to above except primarily dark gray, occasional quartz inclusions/beds, joint set not evident. Drill breaks frequently along re-healed joints or quartz beds/veins. Two (2) intersecting moderate angle joints in top 2 inches of recovery from approximately 16.6 to 16.8 ft, smooth, planar, discolored, tight. Two (2) horizontal to low angle joints at 18.0 and 18.5 ft, rough, planar, discolored, open to slightly open, joint at 18.0 ft is pyrite coated, joint at 18.5 ft slightly discolored, fifth joint at 18.6 ft moderately dipping, rough, planar, discolored with pyrite, tight. Note: Was unable to retrieve 3 to 4 inches of rock core in bottom of boring.
20							34.7 21.3	BOTTOM OF EXPLORATION 21.3 FT
25								
30								
35								
40								

NOTES:

1. FOR BORING LOCATION PLAN SEE B-101.
2. ELEVATIONS SHOWN ON THIS SHEET ARE BASED ON PNSY DATUM – SEE V-101 FOR CONVERSION INFORMATION.

GRAPHIC SCALE

CHECK GRAPHIC SCALE BEFORE USING

SYM	DESCRIPTION	DATE	APPR

NAVFAC

SEAL

MN FST A JOINT VENTURE

A/E INFO

APPROVED David Greenfield
FOR COMMANDER NAVFAC

ACTIVITY: PER DOCUMENT FROM PNSY CODE 980, KITTERY ME
SATISFACTORY TO DATE: 05/09/16

DES MN DRW CK CHK MN
PM/DM: NATHAN LIBBY
BRANCH MANAGER: NATHAN MAHER
FEAD/PM&E: AMIN BAHROUR
FIRE PROTECTION: N/A

DEPARTMENT OF THE NAVY NAVAL FACILITIES ENGINEERING COMMAND
NAVAL FACILITIES ENGINEERING COMMAND ~ MID-ATLANTIC
PUBLIC WORKS DEPARTMENT – MAINE NAVAL SHIPYARD – PORTSMOUTH, NH
PORTSMOUTH NAVAL SHIPYARD KITTERY, MAINE

STRUCTURAL REPAIRS AT BERTHS 11A, 11B AND 11C

BORING LOGS – SHEET 1 OF 17

EPROJECT NO.: 1356489
CONSTR. CONTR. NO. N40085-XX-C-XXXX
NAVFAC DRAWING NO. 12716022
SHEET 26 OF 144
B-601 FP2-16-662

DRAWFORM REVISION: 10 OCTOBER 2014

FILE NAME: S:\1794\Active\179410203\r\TP-104A PNSY Lifting Study\TP-104A PNSY Lifting Study\02 CADD\04 Geotechnical\FP2-16-662.dwg LAYOUT NAME: BORING LOGS - SHEET 1 OF 17 PLOTTED: Friday, May 13, 2016 - 2:29pm USER: cgoodridge

TEST BORING REPORT — Boring No. B3

HALEY ALDRICH

Project	PNSY - DRYDOCK NO. 1 EXPANSION STUDY, KITTERY, MAINE
Client	FAY, SPOFFORD AND THORNDIKE, INC.
Contractor	NEW ENGLAND BORING CONTRACTORS, INC.

File No. 41242-100
Sheet No. 1 of 3
Start February 24, 2015
Finish February 25, 2015
Driller B. Enos
H&A Rep. M. Dodson
Elevation 55.2 (est.)
Datum PNSY
Location See Plan

	Casing	Sampler	Barrel	Drilling Equipment and Procedures
Type	HW	S	NX	Rig Make & Model: CME 45 Skid
Inside Diameter (in.)	4.0	1.375	2.0	Bit Type: Roller Bit
Hammer Weight (lb)	300	140	-	Drill Mud: None
Hammer Fall (in.)	24	30	-	Casing: HW Driven to 26.9 , NW Spun 27.4 ft.
				Hoist/Hammer: Cat-Head Safety Hammer
				PID Make & Model:

Depth (ft)	Sampler Blows per 6 in.	Sample No. & Rec. (in.)	Sample Depth (ft)	USCS Symbol	Stratum Change (Elev/Depth ft)	VISUAL-MANUAL IDENTIFICATION AND DESCRIPTION (Density/consistency, color, GROUP NAME,. max. particle size[1], structure, odor, moisture, optional descriptions) GEOLOGIC INTERPRETATION	Gravel % Coarse	Gravel % Fine	Sand % Coarse	Sand % Medium	Sand % Fine	Sand % Fines	Field Test Dilatancy	Field Test Toughness	Field Test Plasticity	Field Test Strength
0	1 2 2 3	S1 2	0.0 2.0	SP		Very loose gray-brown poorly graded SAND with gravel (SP), mps 1.3 in., no structure, no odor, wet, trace shell specks and fragments	25		5	20	45	5				
						-RIVER BOTTOM DEPOSITS-										
5	WOR WOR 12	S2 17	5.0 6.8	SP		Medium dense light brown poorly graded SAND (SP), mps 0.1 in., no visible structure, no odor, wet				5	35	60				
	36	S2A 2	6.8 7.0	SM	49.7 6.5	Dense light brown silty SAND with gravel (SM), mps 1.2 in., no structure, no odor, wet	10	10	10	20	35	15				
10	7 10 11 11	S3 15	10.0 12.0	SM		Medium dense yellow-brown poorly gradad SAND with gravel (SM), mps 0.7 in., occasionally silty or with silt, no odor, wet		5	5	15	75 85	15				
						-MARINE SAND-										
15	12 36	S4 10	15.0 16.0	SP		Very dense light brown poorly gradad SAND (SP), mps 0.04 in., stratified, no odor, wet					10	90				
	18 18	S4A 10	16.0 17.0	SM	40.2 16.0	Very dense light brown silty SAND with gravel (SM), mps 1.375 in., moderately bonded in-situ, no odor, wet	10	5	25	10	30	20				
20						-GLACIOFLUVIAL DEPOSITS-										

Water Level Data

Date	Time	Elapsed Time (hr.)	Depth (ft) to: Bottom of Casing	Bottom of Hole	Water
WATER AT LEVEL OF RIVER					

Sample ID: O - Open End Rod; T - Thin Wall Tube; U - Undisturbed Sample; S - Split Spoon Sample

Well Diagram: Riser Pipe, Screen, Filter Sand, Cuttings, Grout, Concrete, Bentonite Seal

Summary: Overburden (ft) 27.1; Rock Cored (ft) 21.6; Samples 8S, 6C

Boring No. B3

Field Tests: Dilatancy: R - Rapid S - Slow N - None; Plasticity: N - Nonplastic L - Low M - Medium H - High; Toughness: L - Low M - Medium H - High; Dry Strength: N - None L - Low M - Medium H - High V - Very High

Note: Maximum particle size is determined by direct observation within the limitations of sampler size.
Note: Soil identification based on visual-manual methods of the USCS as practiced by Haley & Aldrich, Inc.

TEST BORING REPORT — Boring No. B3

File No. 41242-100
Sheet No. 2 of 3

Depth (ft)	Sampler Blows per 6 in.	Sample No. & Rec. (in.)	Sample Depth (ft)	USCS Symbol	Stratum Change (Elev/Depth ft)	VISUAL-MANUAL IDENTIFICATION AND DESCRIPTION (Density/consistency, color, GROUP NAME,. max. particle size[1], structure, odor, moisture, optional descriptions) GEOLOGIC INTERPRETATION	Gravel % Coarse	Gravel % Fine	Sand % Coarse	Sand % Medium	Sand % Fine	Sand % Fines	Field Test Dilatancy	Field Test Toughness	Field Test Plasticity	Field Test Strength
20	18 23 30 50/3"	SS 6	20.0 21.8	SW		Very dense brown to gray brown well graded SAND with gravel (SW), mps 1.2 in., no structure, no odor	15	20	25	25	10	5				
						Note: Drill action indicates sand and gravel										
						-GLACIOFLUVIAL DEPOSITS-										
25	30 32 61 79	SS 15	25.0 27.0	GP/GW		Note: Probable cobble from 24.7 - 25.2 ft. Very dense gray to gray-brown poorly to well gradad GRAVEL with sand (GP/GW), mps 1.375 in., no odor, wet Note: Based on spoon action (not in recovery)	40	20	20	10	5	5				
					29.3 26.9	TOP OF BEDROCK 26.9 FT										
30						SEE CORE BORING REPORT FOR ROCK DETAILS										
35																
40																
45																

NOTE: Soil identification based on visual-manual methods of the USCS as practiced by Haley & Aldrich, Inc.

Boring No. B3

CORE BORING REPORT — Boring No. B3

File No. 41242-100
Sheet No. 3 of 3

Depth (ft)	Drilling Rate (min./ft.)	Run No.	Run Depth (ft)	Recovery/RQD in.	Recovery/RQD %	Weathering	Elev./ Depth (ft)	Visual Description and Remarks
								SEE TEST BORING REPORT FOR OVERBURDEN DETAILS
30	3 6 3 3 6	C1	27.1 31.6	54 30	100 56	Fresh	29.1 27.1	Hard, fresh, fine grained PHYLLITE. Foliation/weak bedding dipping at moderate to high angles. Primary joint set horizontal to dipping at low angles, very close to moderately spaced, rough to slightly smoothed, planar to slightly undulating, discolored to occasionally fresh, tight to occassionally open. Secondary joint set dipping at moderate angles, close to widely spaced, rough, planar to slightly undertaling, fresh to discolored, tight. Note: Barrel jammed at 28.6 and 31.6 ft.
35	3 6 4 4 4	C2	31.6 33.2	19 6	99 31	Fresh		Similar to above except slightly lighter in color, grains and bedding more distinct.
	3 4 4 4 4	C3	33.2 38.2	60 55	100 92	Fresh		Hard, fresh, fine grained PHYLLITE/QUARTZITE. Foliation/bedding dipping at high angles to vertical. Primary joint set dipping at low angles to near horizontal, closely (top of recovery only) to widely spaced (four (4) joints in run), rough, planar, fresh to slightly discolored, tight.
								-KITTERY FORMATION-
40	3 4 3 3 4	C4	38.2 43.2	60 35	100 58	Fresh to Slight		Hard to occassionally moderately hard, fresh to occassionally slightly weathered, gray to dark gray PHYLLITE/QUARTZITE. Foliation vertical, very close to moderately spaced, rough, planar, fresh to discolored with mineral stainining, pyrite, tight to partly open especially 40.7 to 41.0 ft. fracutred zone. Secondary joint set dipping at moderate angle, widely spaced, rough , planar, discolored with mineral/pyrite staining, tight. Note: Barrel jammed at 41.7 ft.
45	3 3 4 5	C5	43.2 45.4	26 19	98 72	Fresh to Slight		Similar to above except joints less frequent. Note: Barrel jammed at 45.4 ft.
50	4 3 3 3	C6	45.4 48.7	39.6 39.6	100 100	Fresh		Moderately hard to occassionally hard, fresh, dark gray PHYLLITE. Foliation undulating at high angles to vertical. Two (2) joints in run from primary set spaced moderately, rough, planar/undulating, discolored wit mineral stainign/pyrite, tight.
55							7.5 48.7	BOTTOM OF EXPLORATION 48.7 FT

TEST BORING REPORT — Boring No. B4

HALEY ALDRICH

Project	PNSY - DRYDOCK NO. 1 EXPANSION STUDY, KITTERY, MAINE
Client	FAY, SPOFFORD AND THORNDIKE, INC.
Contractor	NEW ENGLAND BORING CONTRACTORS, INC.

File No. 41242-100
Sheet No. 1 of 2
Start February 12, 2015
Finish February 13, 2015
Driller B. Enos
H&A Rep. M. Dodson
Elevation 55.9 (est.)
Datum PNSY
Location See Plan

	Casing	Sampler	Barrel	Drilling Equipment and Procedures
Type	HW	S	-	Rig Make & Model: CME 45 Skid
Inside Diameter (in.)	4.0	1.375 / 3.0	-	Bit Type: Roller Bit
Hammer Weight (lb)	300	140/300	-	Drill Mud: None
Hammer Fall (in.)	24	30/24	-	Casing: HW Driven to 36.0 ft.
				Hoist/Hammer: Cat-Head Safety Hammer
				PID Make & Model:

Depth (ft)	Sampler Blows per 6 in.	Sample No. & Rec. (in.)	Sample Depth (ft)	USCS Symbol	Stratum Change (Elev/Depth ft)	VISUAL-MANUAL IDENTIFICATION AND DESCRIPTION (Density/consistency, color, GROUP NAME,. max. particle size[1], structure, odor, moisture, optional descriptions) GEOLOGIC INTERPRETATION	Gravel % Coarse	Gravel % Fine	Sand % Coarse	Sand % Medium	Sand % Fine	Sand % Fines	Field Test Dilatancy	Field Test Toughness	Field Test Plasticity	Field Test Strength
0	3 2 2 3	S1 8	0.0 2.0	SM		Very loose dark to light silty SAND (SM), mps 0.1 in., no visible structure, rooting fish-like odor, wet, 60% shell specks and fragments and 40% organics			5	10	55	30				
					4.5											
5	3 5 3 5	S2 7	6.0 8.0	SP		Note: S2 collected at 6.0 ft due to odd tooling height due to tide level. Loose gray poorly graded SAND (SP), mps 0.5 in., no structure, no odor, wet, 15% shell specs		5	10	50	30	5				
						-RIVER BOTTOM DEPOSITS-										
10	11 9 13 24	S3 14	11.0 13.0	SM		Medium dense gray to gray-brown (organic) silty SAND (SM), mps 1.1 in., braided, hydrogen sulfide-like odor, 5% wood and organic fibers, trace 5% shell specks	5	5	5	10	55	20				
15	2 4 4 7	S4 16	16.0 18.0	SM		Similar to above except loose, 10% organic fibers	5	5	5	10	45	30				
					36.9 19.0											
20																

Water Level Data

Date	Time	Elapsed Time (hr.)	Depth (ft) to: Bottom of Casing	Bottom of Hole	Water
WATER AT LEVEL OF RIVER					

Sample ID: O - Open End Rod; T - Thin Wall Tube; U - Undisturbed Sample; S - Split Spoon Sample

Well Diagram: Riser Pipe, Screen, Filter Sand, Cuttings, Grout, Concrete, Bentonite Seal

Summary: Overburden (ft) 36.5; Rock Cored (ft) -; Samples 8S

Boring No. B4

Field Tests: Dilatancy: R - Rapid S - Slow N - None; Plasticity: N - Nonplastic L - Low M - Medium H - High; Toughness: L - Low M - Medium H - High; Dry Strength: N - None L - Low M - Medium H - High V - Very High

Note: Maximum particle size is determined by direct observation within the limitations of sampler size.
Note: Soil identification based on visual-manual methods of the USCS as practiced by Haley & Aldrich, Inc.

TEST BORING REPORT — Boring No. B4

File No. 41242-100
Sheet No. 2 of 2

Depth (ft)	Sampler Blows per 6 in.	Sample No. & Rec. (in.)	Sample Depth (ft)	USCS Symbol	Stratum Change (Elev/Depth ft)	VISUAL-MANUAL IDENTIFICATION AND DESCRIPTION (Density/consistency, color, GROUP NAME,. max. particle size[1], structure, odor, moisture, optional descriptions) GEOLOGIC INTERPRETATION	Gravel % Coarse	Gravel % Fine	Sand % Coarse	Sand % Medium	Sand % Fine	Sand % Fines	Field Test Dilatancy	Field Test Toughness	Field Test Plasticity	Field Test Strength
20	8 7 8 9	S5 10	20.0 22.0	SM		Medium dense olive silty SAND (SM), mps 0.04 in., no visible structure, no odor, wet				10	75	15				
						-GLACIOFLUVIAL DEPOSITS-										
25	5 4 4 3	S6 20	25.0 27.0	SP		Loose light gray-brown poorly graded SAND (SP), mps 0.1 in., no visible structure, no odor, wet				10	30	55	5			
30	11 13 11 8	S7 13	30.0 32.0	SP-SM		Medium dense light olive-brown poorly graded SAND with silt (SP-SM), interbedded with coarse sand, mps 0.7 in., no odor, wet Note: Drill action indicates frequent gravel and occasional small cobbles.				10	10	30	40	10		
35	25* 47* 27*	S8 10	35.0 36.5	SP		*Note: Due to presence of cobbles, used 3 inch spoon and 300 lb hammer for S8. Very dense brown poorly graded SAND with gravel (SP), mps 1 in., no structure, no odor, wet Note: On 2/13/2015, due to cold temperatures and wind chill, the driller pulled casing and relocated barge to Berth 11A wharf due to the upcoming blizzard. Boring terminated at 36.5 ft.	25	15	25	25	5	5				
					19.4 36.5	SEE B4A FOR ADDITIONAL SOIL INFORMATION										
						BOTTOM OF EXPLORATION 36.5 FT										

NOTE: Soil identification based on visual-manual methods of the USCS as practiced by Haley & Aldrich, Inc.

Boring No. B4

NOTES:

1. FOR BORING LOCATION PLAN SEE B–101.
2. ELEVATIONS SHOWN ON THIS SHEET ARE BASED ON PNSY DATUM – SEE V–101 FOR CONVERSION INFORMATION.

GRAPHIC SCALE

CHECK GRAPHIC SCALE BEFORE USING

APPR | DATE | DESCRIPTION | SYM

NAVFAC

SEAL

MN FST A JOINT VENTURE

A/E INFO

APPROVED
David W. Grunfeld
FOR COMMANDER NAVFAC

ACTIVITY: PER DOCUMENT FROM PNSY CODE 980, KITTERY ME

SATISFACTORY TO DATE: 05/09/16

DES MN | DRW CK | CHK MN

PM/DM: NATHAN LIBBY

BRANCH MANAGER: NATHAN MAHER

FEAD/PM&E: AMN BAHROUR

FIRE PROTECTION: N/A

DEPARTMENT OF THE NAVY
NAVAL FACILITIES ENGINEERING COMMAND
PUBLIC WORKS DEPARTMENT – MAINE
PORTSMOUTH NAVAL SHIPYARD

NAVAL FACILITIES ENGINEERING COMMAND – MID-ATLANTIC
NAVAL SHIPYARD – PORTSMOUTH, NH

KITTERY, MAINE

STRUCTURAL REPAIRS AT BERTHS 11A, 11B AND 11C

BORING LOGS – SHEET 2 OF 17

EPROJECT NO.: 1356489

CONSTR. CONTR. NO. N40085–XX–C–XXXX

NAVFAC DRAWING NO. 12716023

SHEET 27 OF 144

B-602 | FP2-16-663

DRAWFORM REVISION: 10 OCTOBER 2014

FILE NAME: S:\1794\Active\179410203\VTP-104A PNSY Lifting Study\02 CADD\04 Geotechnical\FP2-16-663.dwg LAYOUT NAME: BORING LOGS – SHEET 2 OF 17 PLOTTED: Friday, May 13, 2016 – 2:29pm USER: cpodridge

FILE NAME: S:\1794\Active\179410203\VP-104A PNSY Lifting Study\VP-104A PNSY Lifting Study\02 CADD\04 Geotechnical\FP2-16-664.dwg LAYOUT NAME: BORING LOGS - SHEET 3 OF 17 PLOTTED: Friday, May 13, 2016 - 2:29pm USER: cpodfridge

TEST BORING REPORT

HALEY ALDRICH

Boring No. B4A

Project	PNSY - DRYDOCK NO. 1 EXPANSION STUDY, KITTERY, MAINE
Client	FAY, SPOFFORD AND THORNDIKE, INC.
Contractor	NEW ENGLAND BORING CONTRACTORS, INC.

File No. 41242-100
Sheet No. 1 of 2
Start February 17, 2015
Finish February 17, 2015
Driller B. Enos
H&A Rep. M. Dodson
Elevation 53.5 (est.)
Datum PNSY
Location See Plan

	Casing	Sampler	Barrel
Type	HW/NW	S	-
Inside Diameter (in.)	4.0 / 3.0	1.375	-
Hammer Weight (lb)	300	140	-
Hammer Fall (in.)	24	30	-

Drilling Equipment and Procedures
Rig Make & Model: CME 45 Skid
Bit Type: Roller Bit
Drill Mud: None
Casing: HW Driven to 41.0 ft., NW Spun < 41.0 ft.
Hoist/Hammer: Cat-Head Safety Hammer
PID Make & Model:

Depth (ft)	Sampler Blows per 6 in.	Sample No. & Rec. (in.)	Sample Depth (ft)	USCS Symbol	Stratum Change Elev/Depth (ft)	VISUAL-MANUAL IDENTIFICATION AND DESCRIPTION (Density/consistency, color, GROUP NAME, max. particle size*, structure, odor, moisture, optional descriptions GEOLOGIC INTERPRETATION)	Gravel % Coarse	Gravel % Fine	Sand % Coarse	Sand % Medium	Sand % Fine	Sand % Fines	Field Test Dilatancy	Field Test Toughness	Field Test Plasticity	Field Test Strength
0						Note: Barge location was anchored for second attempt on 2/15/2015. See boring log B4 for additional soil overburden information.										
						Note: Advanced casing and roller bit without sampling to 41 ft. Geologic interpretation based on drill action.										
-5																
-10						-GLACIOFLUVIAL DEPOSITS-										
-15						Note: Drill action indicates gray gravelly layers within light brown sand deposits.										
-20																

Water Level Data

Date	Time	Elapsed Time (hr.)	Depth (ft) to: Bottom of Casing	Depth (ft) to: Bottom of Hole	Water
WATER AT LEVEL OF RIVER					

Sample ID
O - Open End Rod
T - Thin Wall Tube
U - Undisturbed Sample
S - Split Spoon Sample

Well Diagram: Riser Pipe; Screen; Filter Sand; Cuttings; Grout; Concrete; Bentonite Seal

Summary
Overburden (ft) 41.4
Rock Cored (ft) -
Samples 1S

Boring No. B4A

Field Tests: **Dilatancy:** R - Rapid S - Slow N - None **Plasticity:** N - Nonplastic L - Low M - Medium H - High
Toughness: L - Low M - Medium H - High **Dry Strength:** N - None L - Low M - Medium H - High V - Very High

*Note: Maximum particle size is determined by direct observation within the limitations of sampler size.
Note: Soil identification based on visual-manual methods of the USCS as practiced by Haley & Aldrich, Inc.

HALEY ALDRICH

TEST BORING REPORT

Boring No. B4A
File No. 41242-100
Sheet No. 2 of 2

Depth (ft)	Sampler Blows per 6 in.	Sample No. & Rec. (in.)	Sample Depth (ft)	USCS Symbol	Stratum Change Elev/Depth (ft)	VISUAL-MANUAL IDENTIFICATION AND DESCRIPTION (Density/consistency, color, GROUP NAME, max. particle size*, structure, odor, moisture, optional descriptions GEOLOGIC INTERPRETATION)	Gravel % Coarse	Gravel % Fine	Sand % Coarse	Sand % Medium	Sand % Fine	Sand % Fines	Field Test Dilatancy	Field Test Toughness	Field Test Plasticity	Field Test Strength
-20						-GLACIOFLUVIAL DEPOSITS-										
-25																
-30																
-35					18.5 35.0	Note: Very bony below approximately 35.0 ft, casing driving with difficulty, wash appears to be a mix of gray rock chips with occassional rounded faces. Driller's interpretation is that bottom 5 ft of casing is bent (tired in wash), may indicate top of bedrock, may slope steeply at this depth and casing is bending along steep face. Note: Top of bedrock very difficult to discern -GLACIOFLUVIAL DEPOSITS AND/OR WEATHERED BEDROCK-									
-40	195	S1 4	41.0 41.4	GW	12.1 41.4	Very dense gray well graded GRAVEL with sand (GW), mps 2.0 in., no visible structure, no odor, wet, approximately 50% of recovery is gray angular rock chips. Occasional larger fragments have discoloring like joint faces. Note: Attempted to spin 3 inch casing into possible rock; unable to get 3 inch casing past lead/bottom 4 inch casing piece. Casing appears to be broken in bottom 5 ft, 3 inch casing shoe damaged on broken 4 inch casing piece. Boring terminated at 41.4 ft. SEE B4B FOR ADDITIONAL ROCK INFORMATION BOTTOM OF EXPLORATION 41.4 FT	45	35	20					
-45																

NOTE: Soil identification based on visual-manual methods of the USCS as practiced by Haley & Aldrich, Inc.

Boring No. B4A

TEST BORING REPORT

HALEY ALDRICH

Boring No. B4B

Project	PNSY - DRYDOCK NO. 1 EXPANSION STUDY, KITTERY, MAINE
Client	FAY, SPOFFORD AND THORNDIKE, INC.
Contractor	NEW ENGLAND BORING CONTRACTORS, INC.

File No. 41242-100
Sheet No. 1 of 3
Start February 18, 2015
Finish February 23, 2015
Driller B. Enos
H&A Rep. M. Dodson
Elevation 55.0 (est.)
Datum PNSY
Location See Plan

	Casing	Sampler	Barrel
Type	HW/NW	-	NX
Inside Diameter (in.)	4.0 / 3.0	-	2.0
Hammer Weight (lb)	300	-	-
Hammer Fall (in.)	24	-	-

Drilling Equipment and Procedures
Rig Make & Model: CME 45 Skid
Bit Type: Roller Bit
Drill Mud: None
Casing: HW Spun 38.0 ft, NW Spun 44.0 ft.
Hoist/Hammer: Cat-Head Safety Hammer
PID Make & Model:

Depth (ft)	Sampler Blows per 6 in.	Sample No. & Rec. (in.)	Sample Depth (ft)	USCS Symbol	Stratum Change Elev/Depth (ft)	VISUAL-MANUAL IDENTIFICATION AND DESCRIPTION (Density/consistency, color, GROUP NAME, max. particle size*, structure, odor, moisture, optional descriptions GEOLOGIC INTERPRETATION)	Gravel % Coarse	Gravel % Fine	Sand % Coarse	Sand % Medium	Sand % Fine	Sand % Fines	Field Test Dilatancy	Field Test Toughness	Field Test Plasticity	Field Test Strength
0						Note: Barge location was anchored for third attempt on 2/18/2015. See boring logs B4 and B4A for additional soil overburden information. Geologic interpretation based on drill action.										
-5																
-10																
-15																
-20																

Water Level Data

Date	Time	Elapsed Time (hr.)	Depth (ft) to: Bottom of Casing	Depth (ft) to: Bottom of Hole	Water
WATER AT LEVEL OF RIVER					

Sample ID
O - Open End Rod
T - Thin Wall Tube
U - Undisturbed Sample
S - Split Spoon Sample

Well Diagram: Riser Pipe; Screen; Filter Sand; Cuttings; Grout; Concrete; Bentonite Seal

Summary
Overburden (ft) 45.0
Rock Cored (ft) 18.3
Samples 4C

Boring No. B4B

Field Tests: **Dilatancy:** R - Rapid S - Slow N - None **Plasticity:** N - Nonplastic L - Low M - Medium H - High
Toughness: L - Low M - Medium H - High **Dry Strength:** N - None L - Low M - Medium H - High V - Very High

*Note: Maximum particle size is determined by direct observation within the limitations of sampler size.
Note: Soil identification based on visual-manual methods of the USCS as practiced by Haley & Aldrich, Inc.

HALEY ALDRICH

TEST BORING REPORT

Boring No. B4B
File No. 41242-100
Sheet No. 2 of 3

Depth (ft)	Sampler Blows per 6 in.	Sample No. & Rec. (in.)	Sample Depth (ft)	USCS Symbol	Stratum Change Elev/Depth (ft)	VISUAL-MANUAL IDENTIFICATION AND DESCRIPTION (Density/consistency, color, GROUP NAME, max. particle size*, structure, odor, moisture, optional descriptions GEOLOGIC INTERPRETATION)	Gravel % Coarse	Gravel % Fine	Sand % Coarse	Sand % Medium	Sand % Fine	Sand % Fines	Field Test Dilatancy	Field Test Toughness	Field Test Plasticity	Field Test Strength
-20																
-25																
-30					26.0 29.0	Note: Presence of gravel starting at approximately 29.0 ft. -GLACIOFLUVIAL DEPOSITS-										
-35						Note: Color change to gray from brown at approximately 37.0 ft.										
-40					18.0 37.0	Note: Drill action/cuttings indicate sand and gravel, primarily gravel below 38.0 ft. Note: Drill action indicates stream change at 39.0 ft.										
-45					16.0 39.0	Note: Cored through cobbles to 42.5 ft and spun casing to 43.8 ft. PROBABLE TOP OF BEDROCK 43.8 FT										
					11.2 43.8	Note: Advanced roller bit to 45.0 ft. Drill action indicates bedrock, one probable joint at approximately 44.3 ft.										
					10.0 45.0	SEE CORE BORING REPORT FOR ROCK DETAILS										

NOTE: Soil identification based on visual-manual methods of the USCS as practiced by Haley & Aldrich, Inc.

Boring No. B4B

CORE BORING REPORT

HALEY ALDRICH

Boring No. B4B
File No. 41242-100
Sheet No. 3 of 3

Depth (ft)	Drilling Rate (min./ft.)	Run No.	Run Depth (ft)	Recovery/RQD in.	Recovery/RQD %	Weathering	Elev./ Depth (ft)	Visual Description and Remarks
45	3						10.0 45.0	*SEE TEST BORING REPORT FOR OVERBURDEN DETAILS*
	4	C1	45.0 50.0	57 16	95 27	Slight		Hard, fresh to slightly weathered, gray, aphanitic PHYLLITE. Foliation/thinly bedded dipping at moderate to high angles. Primary joint set difficult to discern due to high amount of breaks intersecting with occasional joints. Recovery highly broken/fractured in general. Primary joint set appears to be dipping at low angles to near horizontal, close to possibly widely spaced, rough, discolored to slightly decomposed, tight to open. Possible secondary joint set dipping at moderate angles, moderately to widely spaced, rought to smooth, planar, fresh, occasional vuggy zones with slight material loss. Note: Barrel jammed at 46.3 and 47.6 ft.
	4							
	3							
50	4	C2	50.0 54.8	52 24	90 42	Slight		Similar to above. Recovery of primarily intact core sections from 50.0 to 52.5 ft., below 52.5 ft recovery primarily consists of broken/fractured angular pieces, jointing frequently difficult to discern. -KITTERY FORMATION- Note: Barrel jammed at 53.0 ft.. Note: Bottom 1 ft jamming frequently may be part of the reason for the recovery loss, also possibly due to angle of drilling at surface due to high amplitude tides today (barge pushed to northeast).
	6							
	4							
	3							
55	3	C3	54.8 59.8	56 4	93 7	Slight		Similar to above. Intact core sections and RQD from between 55.8 to 57.4 ft, joints difficult to discern due to highly broken/fractured/jointed recovery. Known joints very close to moderately spaced, dipping primarily at low angles, smooth to rough, planar/undulating, discolored to slightly decomposed. Note: Barrel jammed at 56.8, 58.8 and 59.6 ft.
	3							
	4							
	*8							
60	4	C4	59.8 63.3	39 4	93 10	Slight		Similar to above. Recovery and intact core from approximately 59.8 to 60.7 ft., and 61.7 to bottom of recovery. Joint sets difficult to discern due to highly broken/fractured/jointed recovery. Known joints primarily very close to closely spaced, dipping at varying low to moderate angles, smooth to rough, planar, tight to open, fresh to discolored to slightly decomposed. Note: Barrel jammed at 61.2, 62.0 and 63.3 ft.
	4							
	3							
	3						-8.3 63.3	BOTTOM OF EXPLORATION 63.3 FT
65								
70								
75								

NOTES:

1. FOR BORING LOCATION PLAN SEE B-101.
2. ELEVATIONS SHOWN ON THIS SHEET ARE BASED ON PNSY DATUM - SEE V-101 FOR CONVERSION INFORMATION.

GRAPHIC SCALE

CHECK GRAPHIC SCALE BEFORE USING

APPR	DATE	DESCRIPTION	MJS

NAVFAC

SEAL

MN FST A JOINT VENTURE

A/E INFO

APPROVED
David W. Grunfeld
FOR COMMANDER NAVFAC

ACTIVITY: PER DOCUMENT FROM PNSY CODE 980, KITTERY ME

SATISFACTORY TO DATE: 05/09/16

DES: MN | DRW: CK | CHK: MN

PM/DM: NATHAN LIBBY

BRANCH MANAGER: NATHAN MAHER

FEAD/PM&E: AMN BAHROUR

FIRE PROTECTION: N/A

DEPARTMENT OF THE NAVY
NAVAL FACILITIES ENGINEERING COMMAND
PUBLIC WORKS DEPARTMENT - MAINE
PORTSMOUTH NAVAL SHIPYARD

NAVAL FACILITIES ENGINEERING COMMAND - MID-ATLANTIC
NAVAL SHIPYARD - PORTSMOUTH, NH

STRUCTURAL REPAIRS AT BERTHS 11A, 11B AND 11C
KITTERY, MAINE

BORING LOGS - SHEET 3 OF 17

EPROJECT NO.: 1356489

CONSTR. CONTR. NO. N40085-XX-C-XXXX

NAVFAC DRAWING NO. 12716024

SHEET 28 OF 144

B-603 | FP2-16-664

DRAWFORM REVISION: 10 OCTOBER 2014

TEST BORING REPORT

Boring No. LB-01

Project	PNSY-LIFTING AND HANDLING IMPROVEMENTS DRY DOCK 1, KITTERY, ME
Client	FAY, SPOFFORD AND THORNDIKE, INC.
Contractor	NEW ENGLAND BORING CONTRACTORS, INC.

File No. 41242-000
Sheet No. 1 of 3
Start December 15, 2014
Finish December 16, 2014
Driller M. D'Ambrosio
H&A Rep. A. Fleming
Elevation 106.0 (est.)
Datum PNSY
Location See Plan

	Casing	Sampler	Barrel	Drilling Equipment and Procedures
Type	HW	S	NX	Rig Make & Model: Acker AD II Truck
Inside Diameter (in.)	4.0	1.375	2.0	Bit Type: Roller Bit
Hammer Weight (lb)	300	140	-	Drill Mud: None
Hammer Fall (in.)	24	30	-	Casing: HW Driven to 21 ft.
				Hoist/Hammer: Cat-Head Safety Hammer
				PID Make & Model: MiniRAE 2000

Depth (ft)	Sampler Blows per 6 in.	Sample No. & Rec. (in.)	Sample Depth (ft)	USCS Symbol	Stratum Change (Elev/Depth)	VISUAL-MANUAL IDENTIFICATION AND DESCRIPTION (Density/consistency, color, GROUP NAME, max. particle size[1], structure, odor, moisture, optional descriptions GEOLOGIC INTERPRETATION)	Gravel % Coarse	Gravel % Fine	Sand % Coarse	Sand % Medium	Sand % Fine	Field Test Dilatancy	Field Test Toughness	Field Test Plasticity	Field Test Dry Strength
0					105.5 0.5	-ASPHALT-									
	27 30 61 91	S1 15	1.0 3.0	SM		Very dense brown to olive brown silty SAND with gravel (SM), mps 0.7 in., no structure, no odor, moist PID = ND ppm		15	5	15	50	15			
	43 24 26 19	S2 13	3.0 5.0	SM		Similar to above except dense PID = ND ppm -FILL-		15	5	15	50	15			
5	34 54 21 15	S3 3	5.0 7.0	SM		Similar to above except very dense PID = ND ppm		15	5	15	50	15			
	20 8 6 5	S4 3	7.0 9.0	SM	98.5 7.5	Medium dense brown to olive brown silty SAND with gravel (SM), mps 0.8 in., no structure, no odor, wet PID = ND ppm	5	10	5	15	50	15			
	6 6 7 7	S5 9	9.0 11.0	CL		Stiff olive brown sandy lean CLAY with gravel (CL), mps 0.6 in., no structure, no odor, wet PID = ND ppm -FILL- Note: Drill action indicates boulder/cobbles and/or gravel at 12.5 ft.		15	5	15	25	40	S	L	L
10					93.5 12.5										
	5 12 12 12	S6 7	14.0 16.0	CL		Hard olive brown to gray gravelly lean CLAY with sand (CL), mps 1.0 in., no structure, no odor, wet PID = 0.1 ppm -FILL- Note: Drill action indicates change in density and material at 18.0 ft.	15	20	5	10	10	40	S	L	L
15					88.0 18.0										
	33 100/6"	S7 8	19.0 20.0	SM		Very dense tan silty SAND with gravel (SM), mps 1.0 in., bonded, no odor, wet	13	16	10	14	18	29			
20															

Water Level Data

Date	Time	Elapsed Time (hr.)	Depth (ft) to: Bottom of Casing	Bottom of Hole	Water
12/15/2014	-	-	5.0	7.0	~7

Sample ID
O - Open End Rod
T - Thin Wall Tube
U - Undisturbed Sample
S - Split Spoon Sample

Well Diagram
Riser Pipe
Screen
Filter Sand
Cuttings
Grout
Concrete
Bentonite Seal

Summary

Overburden (ft)	22.0
Rock Cored (ft)	13.0
Samples	7S, 6C

Boring No. LB-01

Field Tests: **Dilatancy:** R - Rapid S - Slow N - None
Plasticity: N - Nonplastic L - Low M - Medium H - High
Toughness: L - Low M - Medium H - High
Dry Strength: N - None L - Low M - Medium H - High V - Very High
Note: Maximum particle size is determined by direct observation within the limitations of sampler size.
Note: Soil identification based on visual-manual methods of the USCS as practiced by Haley & Aldrich, Inc.

TEST BORING REPORT

Boring No. LB-01
File No. 41242-000
Sheet No. 2 of 3

Depth (ft)	Sampler Blows per 6 in.	Sample No. & Rec. (in.)	Sample Depth (ft)	USCS Symbol	Stratum Change (Elev/Depth (ft)	VISUAL-MANUAL IDENTIFICATION AND DESCRIPTION (Density/consistency, color, GROUP NAME, max. particle size[1], structure, odor, moisture, optional descriptions GEOLOGIC INTERPRETATION)	Gravel % Coarse	Gravel % Fine	Sand % Coarse	Sand % Medium	Sand % Fine	Field Test Dilatancy	Field Test Toughness	Field Test Plasticity	Field Test Dry Strength
20						PID = 0.2 ppm									
					85.0 21.0	-GLACIAL TILL- Note: Drill action indicates rock at 21.0 ft. TOP OF BEDROCK 21.0 FT Note: Advanced roller bit to 22.0 ft. SEE CORE BORING REPORT FOR ROCK DETAILS									
25															
30															
35															
40															
45															
50															

NOTE: Soil identification based on visual-manual methods of the USCS as practiced by Haley & Aldrich, Inc.

Boring No. LB-01

CORE BORING REPORT

Boring No. LB-01
File No. 41242-000
Sheet No. 3 of 3

Depth (ft)	Drilling Rate (min./ft.)	Run No.	Run Depth (ft)	Recovery/RQD in.	Recovery/RQD %	Weathering	Elev./ Depth (ft)	Visual Description and Remarks
								SEE TEST BORING REPORT FOR OVERBURDEN DETAILS
	4 3	C1	22.0 24.0	19 11	79 46	Slight		Hard, slightly weathered, light gray to dark gray, fine grained to aphanitic MYLLITE with quartzite stringers. Foliation/bedding indistinct. Primary joint set moderately to highly dipping, very close to moderately spaced, rough to smooth, planar to undulating, fresh to discolored, tight to open.
25	4 3	C2	24.0 25.5	16 8	89 44	Slight		Similar to above.
	2 4 2	C3	25.5 27.5	18 4	75 17	Slight		Similar to above. Note: Core barrel jamming frequently
	2 4 5	C4	27.5 30.5	23 14	64 39	Slight		Hard to moderately hard, slightly weathered, light to dark gray, fine grained to aphanitic MYLLITE with quartzite stringers. Foliation/bedding indistinct. Primary joint set moderately to highly dipping, very close to moderately spaced, rough to smooth, planar to undulating, fresh to discolored, tight to open. -KITTERY FORMATION-
30	3 2 4 5	C5	30.5 33.0	13 0	43 0	Slight		Similar to above with quartzite bands, frequent jamming. Very fragmented recovery.
	5 5	C6	33.0 35.0	21 0	88 0	Moder-ate		Similar to above except moderately weathered and with quartzite stringers. Recovery highly fractured. Frequent jamming of core barrel.
35							71.0 35.0	BOTTOM OF EXPLORATION 35.0 FT
40								
45								
50								

VARIABLE HEAD PERMEABILITY TEST DATA SUMMARY

Boring No. LB-01
Test No. 1

Project	Lifting and Handling Improvements Dry Dock 1 at Portsmouth Naval Shipyard	File Number	41242-000
Location	Kittery, Maine	Field Rep.	A. FLEMING
Client	Fay, Spofford, and Thorndike	Test Date	12/15/2014

Boring Location: LB-01
Type of Installation: Open Hole
Reference Point: TOC
Reference Elevation: 105
Initial Depth to Groundwater: 3.8 feet
Initial Head of Water, Ho: 3.80 feet

Type of Test: Falling head
Test Depth: 19-21 ft. feet
Test Zone Material: Glacial Till
Length of Test Zone: 2.0 feet
Diameter of Test Zone: 4.0 inches
Diameter of Cased Length: 4.0 inches

Elapsed time, t (min)	Head of water at time t, Ht (feet)	Head Ratio at time t, Ht/Ho
0.0	3.80	1.00
1.0	3.80	1.00
2.0	3.80	1.00
3.0	3.75	0.99
4.0	3.75	0.99
5.0	3.75	0.99
6.0	3.70	0.97
7.0	3.70	0.97
8.0	3.70	0.97
9.0	3.70	0.97
10.0	3.70	0.97
11.0	3.70	0.97
12.0	3.70	0.97
13.0	3.70	0.97
14.0	3.70	0.97
15.0	3.70	0.97
16.0	3.70	0.97
17.0	3.70	0.97

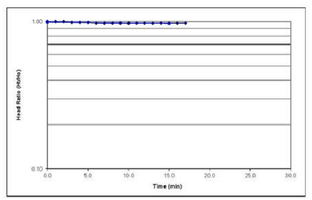

Fitting values for line:

Y	X
0.990	0
0.990	15

1.19E-05 cm/s

Notes:
1. Test performed using open test section.
2. Calculation of the coefficient of permeability based on Cass G as recommended in a publication by the U.S. Army Corps of Engineers, Waterways Experiment Station, Bulletin No. 35, "Time Lag and Soil Permeability in Groundwater Observations," Vicksburg, Mississippi, by M. Jean Hvorslev, April 1951.

\\MAN\common\41242_PNSY\000 Calculations\Falling Head Test\Hvor_LB-01_60_typ\G_080220 15.xls

Page 1 of 1
4/8/2015

NOTES:

1. FOR BORING LOCATION PLAN SEE B-101.
2. ELEVATIONS SHOWN ON THIS SHEET ARE BASED ON PNSY DATUM - SEE V-101 FOR CONVERSION INFORMATION.

GRAPHIC SCALE

CHECK GRAPHIC SCALE BEFORE USING

APPR | DATE | DESCRIPTION | SYM

NAVFAC

SEAL

MN FST A JOINT VENTURE
A/E INFO

APPROVED
David W. Grunfeld
FOR COMMANDER NAVFAC

ACTIVITY:
PER DOCUMENT FROM PNSY
CODE 980, KITTERY ME

SATISFACTORY TO DATE: 05/09/16

DES: MN | DRW: CK | CHK: MN
PM/DM: NATHAN LIBBY
BRANCH MANAGER: NATHAN MAHER
FEAD/PM&E: AMN BAHROUR
FIRE PROTECTION: N/A

DEPARTMENT OF THE NAVY
NAVAL FACILITIES ENGINEERING COMMAND
PUBLIC WORKS DEPARTMENT - MAINE
PORTSMOUTH NAVAL SHIPYARD

NAVAL FACILITIES ENGINEERING COMMAND - MID-ATLANTIC
NAVAL SHIPYARD - PORTSMOUTH, NH

STRUCTURAL REPAIRS AT BERTHS 11A, 11B AND 11C
KITTERY, MAINE

BORING LOGS - SHEET 4 OF 17

EPROJECT NO.: 1356489
CONSTR. CONTR. NO. N40085-XX-C-XXXX
NAVFAC DRAWING NO. 12716025
SHEET 29 OF 144
B-604 | FP2-16-665

DRAWFORM REVISION: 10 OCTOBER 2014

FILE NAME: S:\1794\Active\179410203\VTP-104A PNSY Lifting Study\TP-104A PNSY Lifting Study\02 CADD\04 Geotechnical\FP2-16-665.dwg LAYOUT NAME: BORING LOGS - SHEET 4 OF 17 PLOTTED: Friday, May 13, 2016 - 2:30pm USER: cpodfridge

TEST BORING REPORT

HALEY ALDRICH

Boring No. LB-02

Project: PNSY-LIFTING AND HANDLING IMPROVEMENTS DRY DOCK 1, KITTERY, ME
Client: FAY, SPOFFORD AND THORNDIKE, INC.
Contractor: NEW ENGLAND BORING CONTRACTORS, INC.

File No. 41242-000
Sheet No. 1 of 4
Start December 9, 2014
Finish December 15, 2014
Driller M. D'Ambrosio
H&A Rep. A. Fleming
Elevation Datum 106.0 (est.) PNSY
Location See Plan

	Casing	Sampler	Barrel
Type	HW	S	NX
Inside Diameter (in.)	4.0	1.375	2.0
Hammer Weight (lb)	300	140	-
Hammer Fall (in.)	24	30	-

Drilling Equipment and Procedures
Rig Make & Model: Acker AD II Truck
Bit Type: Roller Bit
Drill Mud: None
Casing: HW Driven to 49 ft.
Hoist/Hammer: Cat-Head Safety Hammer
PID Make & Model: MiniRAE 2000

Depth (ft)	Sampler Blows per 6 in.	Sample No. & Rec. (in.)	Sample Depth (ft)	USCS Symbol	Stratum Change Elev/Depth (ft)	VISUAL-MANUAL IDENTIFICATION AND DESCRIPTION (Density/consistency, color, GROUP NAME, max. particle size[1], structure, odor, moisture, optional descriptions) GEOLOGIC INTERPRETATION	Gravel % Coarse	Gravel % Fine	Sand % Coarse	Sand % Medium	Sand % Fine	% Fines	Field Test: Dilatancy	Toughness	Plasticity	Strength
0					105.4	-ASPHALT-										
	16 11 9 5	S1 9	1.0 3.0	SP	0.6	Medium dense tan to light brown poorly graded SAND (SP), mps 0.2 in., no structure, no odor, moist PID = ND ppm		10	5	10	70	5				
	7 3 6 9	S2 14	3.0 5.0	SP		Similar to above except loose PID = 0.2 ppm		10	5	10	70	5				
						-FILL-										
5	14 21 20 10	S3 11	5.0 7.0	SP		Dense tan to light brown poorly graded SAND with gravel (SP), mps 0.6 in., no structure, no odor, moist PID = 0.1 ppm		15	5	10	65	5				
	11 10 9 9	S4 3	7.0 9.0	SP		Medium dense tan to light brown poorly graded SAND with gravel (SP), mps 0.6 in., no structure, no odor, wet, bottom 1 in. of spoon tip 70% shale fragments PID = ND ppm		20	5	10	60	5				
10					92.0											
15	33 37 14 16	S5 8	14.0 16.0	GP	14.0	Very dense gray poorly graded GRAVEL with sand (GP), mps 0.8 in., no structure, no odor, wet PID = ND ppm	25	45	5	10	10	5				
20	14 22	S6 10	19.0 21.0	GW		Dense dark gray well graded GRAVEL (GW), mps 1.0 in., no structure, no odor, wet	40	50	10							

Water Level Data					
Date	Time	Elapsed Time (hr.)	Depth (ft) to: Bottom of Casing	Bottom of Hole	Water
12/12/2014	7:45	~ 18	19	20	11.9

Sample ID: O - Open End Rod; T - Thin Wall Tube; U - Undisturbed Sample; S - Split Spoon Sample

Well Diagram: Riser Pipe; Screen; Filter Sand; Cuttings; Grout; Concrete; Bentonite Seal

Summary: Overburden (ft) 50.0; Rock Cored (ft) 10.0; Samples 11S, 3C

Boring No. LB-02

Field Tests: Dilatancy: R - Rapid S - Slow N - None; Plasticity: N - Nonplastic L - Low M - Medium H - High; Toughness: L - Low M - Medium H - High; Dry Strength: N - None L - Low M - Medium H - High V - Very High

[1] Note: Maximum particle size is determined by direct observation within the limitations of sampler size.

Note: Soil identification based on visual-manual methods of the USCS as practiced by Haley & Aldrich, Inc.

HALEY ALDRICH

TEST BORING REPORT

Boring No. LB-02
File No. 41242-000
Sheet No. 2 of 4

Depth (ft)	Sampler Blows per 6 in.	Sample No. & Rec. (in.)	Sample Depth (ft)	USCS Symbol	Stratum Change Elev/Depth (ft)	VISUAL-MANUAL IDENTIFICATION AND DESCRIPTION (Density/consistency, color, GROUP NAME, max. particle size[1], structure, odor, moisture, optional descriptions) GEOLOGIC INTERPRETATION	Gravel % Coarse	Gravel % Fine	Sand % Coarse	Sand % Medium	Sand % Fine	% Fines	Field Test: Dilatancy	Toughness	Plasticity	Strength
20	26 19					PID = ND ppm										
						-FILL-										
25	27 19 12 32	S7 7	24.0 26.0	GW		Similar to above PID = 0.1 ppm	40	50	10							
					77.0	Note: Change in drill wash color at 29.0 ft.										
30	29 26 23 36	S8 16	30.0 32.0	SP-SM	29.0	Dense tan to light brown poorly graded SAND with silt and gravel (SP-SM), mps 0.8 in., no structure, no odor, wet PID = ND ppm	4	18	11	26	30	11				
35	16 13 18 17	S9 8	34.0 36.0	SP-SM		Similar to above PID = ND ppm		15				10				
						-GLACIOFLUVIAL DEPOSITS-										
40	9 13 18 19	S10 9	39.0 41.0	SP		Dense tan poorly graded SAND (SP), mps 0.05 in., no structure, no odor, wet PID = 0.1 ppm					16	79	5			
45	8 12 14 21	S11 13	44.0 46.0	SP		Similar to above except medium dense and bottom 2 in. stained red (iron) PID = 0.1 ppm			5	10	80	5				
					57.5	Note: Drill action indicates rock at 49 ft.										
					49.0	-GLACIAL TILL-										

NOTE: Soil identification based on visual-manual methods of the USCS as practiced by Haley & Aldrich, Inc.

Boring No. LB-02

HALEY ALDRICH

TEST BORING REPORT

Boring No. LB-02
File No. 41242-000
Sheet No. 3 of 4

Depth (ft)	Sampler Blows per 6 in.	Sample No. & Rec. (in.)	Sample Depth (ft)	USCS Symbol	Stratum Change Elev/Depth (ft)	VISUAL-MANUAL IDENTIFICATION AND DESCRIPTION (Density/consistency, color, GROUP NAME, max. particle size[1], structure, odor, moisture, optional descriptions) GEOLOGIC INTERPRETATION	Gravel % Coarse	Gravel % Fine	Sand % Coarse	Sand % Medium	Sand % Fine	% Fines	Field Test: Dilatancy	Toughness	Plasticity	Strength
50						TOP OF BEDROCK 49.0 FT Note: Advanced roller bit to 50.0 ft. SEE CORE BORING REPORT FOR ROCK DETAILS										
55																
60																

NOTE: Soil identification based on visual-manual methods of the USCS as practiced by Haley & Aldrich, Inc.

Boring No. LB-02

HALEY ALDRICH

CORE BORING REPORT

Boring No. LB-02
File No. 41242-000
Sheet No. 4 of 4

Depth (ft)	Drilling Rate (min./ft.)	Run No.	Run Depth (ft)	Recovery in.	RQD %	Weathering	Elev./ Depth (ft)	Visual Description and Remarks
								SEE TEST BORING REPORT FOR OVERBURDEN DETAILS
50	4	C1	50.0 53.0	25.5 8	71 22	Slight to Moderate		Moderately hard to hard, slightly to moderately weathered, light to dark gray, fine grained to aphanitic PHYLLITE. Foliation/bedding indistinct; Primary joint set moderately to highly dipping, very close to moderately spaced, rough to smooth, undulating, fresh to discolored, tight to open.
	4							
	5							
	4	C2	53.0 56.0	34 27	94 75	Slight to Moderate		Similar to above.
55	5							-KITTERY FORMATION-
	5							
	5	C3	56.0 60.0	45 28	94 58	Slight to Moderate		Similar to above except with quartzite bands and stringers.
	4							
60	5							
	5						46.0 60.0	BOTTOM OF EXPLORATION 60.0 FT
65								
70								
75								
80								

NOTES:

1. FOR BORING LOCATION PLAN SEE B-101.
2. ELEVATIONS SHOWN ON THIS SHEET ARE BASED ON PNSY DATUM – SEE V-101 FOR CONVERSION INFORMATION.

GRAPHIC SCALE

CHECK GRAPHIC SCALE BEFORE USING

APPR | DATE | DESCRIPTION | SYM

NAVFAC

SEAL

MN FST A JOINT VENTURE

A/E INFO

APPROVED
David W. Grunfeld
FOR COMMANDER NAVFAC

ACTIVITY: PER DOCUMENT FROM PNSY CODE 980, KITTERY ME

SATISFACTORY TO DATE: 05/09/16

DES: MN | DRW: CK | CHK: MN

PM/DM: NATHAN LIBBY
BRANCH MANAGER: NATHAN MAHER
FEAD/PM&E: AMN BAHROUR
FIRE PROTECTION: N/A

DEPARTMENT OF THE NAVY
NAVAL FACILITIES ENGINEERING COMMAND
PUBLIC WORKS DEPARTMENT - MAINE
PORTSMOUTH NAVAL SHIPYARD

NAVAL FACILITIES ENGINEERING COMMAND – MID-ATLANTIC
NAVAL SHIPYARD – PORTSMOUTH, NH

STRUCTURAL REPAIRS AT BERTHS 11A, 11B AND 11C
KITTERY, MAINE

BORING LOGS – SHEET 5 OF 17

EPROJECT NO.: 1356489

CONSTR. CONTR. NO. N40085-XX-C-XXXX

NAVFAC DRAWING NO. 12716026

SHEET 30 OF 144

B-605 | FP2-16-666

DRAWFORM REVISION: 10 OCTOBER 2014

FILE NAME: S:\1794\Active\179410203\r\TP-104A PNSY Lifting Study\TP-104A PNSY Lifting Study\02 CADD\04 Geotechnical\FP2-16-666.dwg LAYOUT NAME: BORING LOGS – SHEET 5 OF 17 PLOTTED: Friday, May 13, 2016 – 2:30pm USER: cpodirdige

TEST BORING REPORT

Boring No. LB-03

Project	PNSY-LIFTING AND HANDLING IMPROVEMENTS DRY DOCK I, KITTERY, ME
Client	FAY, SPOFFORD AND THORNDIKE, INC.
Contractor	NEW ENGLAND BORING CONTRACTORS, INC.

File No. 41242-000
Sheet No. 1 of 4
Start December 4, 2014
Finish December 8, 2014
Driller M. D'Ambrosio
H&A Rep. A. Fleming
Elevation 106.0 (est.)
Datum PNSY
Location See Plan

Drilling Equipment and Procedures	Casing	Sampler	Barrel
Type	HW	S	NX
Inside Diameter (in.)	4.0	1.375	2.0
Hammer Weight (lb)	300	140	-
Hammer Fall (in.)	24	30	-

Rig Make & Model: Acker AD II Truck
Bit Type: Roller Bit
Drill Mud: None
Casing: HW Driven to 50.2 ft.
Hoist/Hammer: Cat-Head Safety Hammer
PID Make & Model: MiniRAE 2000

Depth (ft)	Sampler Blows per 6 in.	Sample No. & Rec. (in.)	Sample Depth (ft)	USCS Symbol	Stratum Change (ft) Elev/Depth	VISUAL-MANUAL IDENTIFICATION AND DESCRIPTION (Density/consistency, color, GROUP NAME, max. particle size*, structure, odor, moisture, optional descriptions) GEOLOGIC INTERPRETATION	Gravel % Coarse	Gravel % Fine	Sand % Coarse	Sand % Medium	Sand % Fine	Sand % Fines	Field Test Dilatancy	Field Test Toughness	Field Test Plasticity	Field Test Strength
0					105.6 0.4	-ASPHALT-										
	17 9 6 10	S1 10	0.5 2.5	SP-SM		Medium dense brown to dark brown poorly graded SAND with silt and gravel (SP-SM), mps 0.4 in., no structure, no odor, moist, trace black fabric marring, trace pockets of silty SAND (35% silt) PID = ND ppm		15	10	25	40	10				
	12 9 10 8	S2 11	2.5 4.5	SP-SM		Similar to above except no black marring and no pockets of silty SAND PID = ND ppm -FILL-		15	10	25	40	10				
5	32 16 9 22	S3 10	4.5 6.5	SP-SM		Medium dense brown poorly graded SAND with silt and gravel (SP-SM), mps 0.5 in., no structure, no odor, wet PID = ND ppm		15	15	25	35	10				
	27 89 200/6"	S4 18	6.5 8.0	SW-SM		Very dense brown to dark tan well graded SAND with silt and gravel (SW-SM), mps 1.0 in., no structure, no odor, wet, bottom 1 in. of spoon and spoon tip lodged with shale fragments PID = ND ppm	5	15	20	30	20	10				
					98.0 8.0	Note: Drill action indicates presence of weathered bedrock fragments or cobbles/gravel.										
10	45 30 31 29	S5 8	11.5 13.5	GP		Very dense brown poorly graded GRAVEL (GP), mps 0.8 in., no structure, no odor, wet, 100% black fissile shale fragments PID = ND ppm	30	65	5							
						Note: Drill action indicates cobbles/gravel at 14 ft.										
15	23 13 11 11	S6 9	15.0 17.0	SM		Medium dense tan silty SAND with gravel (SM), mps 0.4 in., no structure, no odor, wet, 25% shale fragments PID = ND ppm		15	10	20	25	30				
						-FILL-										
20	9 25	S7 10	19.0 21.0	GP		Very dense brown poorly graded GRAVEL (GP), mps 0.8 in., no structure, no odor, wet, trace pockets of sandy SILT (possible residual soil)	30	65	5							

Water Level Data					
Date	Time	Elapsed Time (hr.)	Depth (ft) to: Bottom of Casing	Bottom of Hole	Water
12/4/2014	-	-	4.5	6.5	~ 5

Sample ID
O - Open End Rod
T - Thin Wall Tube
U - Undisturbed Sample
S - Split Spoon Sample

Well Diagram: Riser Pipe, Screen, Filter Sand, Cuttings, Grout, Concrete, Bentonite Seal

Summary	
Overburden (ft)	54.0
Rock Cored (ft)	10
Samples	12S, 5C

Boring No. LB-03

Field Tests: Dilatancy: R - Rapid S - Slow N - None; Plasticity: N - Nonplastic L - Low M - Medium H - High; Toughness: L - Low M - Medium H - High; Dry Strength: N - None L - Low M - Medium H - High V - Very High

*Note: Maximum particle size is determined by direct observation within the limitations of sampler size.

Note: Soil identification based on visual-manual methods of the USCS as practiced by Haley & Aldrich, Inc.

TEST BORING REPORT

Boring No. LB-03
File No. 41242-000
Sheet No. 2 of 4

Depth (ft)	Sampler Blows per 6 in.	Sample No. & Rec. (in.)	Sample Depth (ft)	USCS Symbol	Stratum Change (ft) Elev/Depth	VISUAL-MANUAL IDENTIFICATION AND DESCRIPTION (Density/consistency, color, GROUP NAME, max. particle size*, structure, odor, moisture, optional descriptions) GEOLOGIC INTERPRETATION	Gravel % Coarse	Gravel % Fine	Sand % Coarse	Sand % Medium	Sand % Fine	Sand % Fines	Field Test Dilatancy	Field Test Toughness	Field Test Plasticity	Field Test Strength
20	34 16					PID = ND ppm Note: Advanced casing at slight angle. Low effort required for casing advancement. -FILL-										
25	7 17 3	S8 1	24.0 26.0			Poor recovery. -FILL- Note: Probable boulders encountered at 28.5 ft. to 35 ft. Used core barrel to advance through boulders.										
					77.5 28.5											
30		BC1	30.0 32.5			Note: BC1 designated as boulder core 1 from 30.0 to 32.5 ft. -POSSIBLE BLAST ROCK FILL-										
		BC2	32.5 35.0			Note: BC2 designated as boulder core 2 from 32.5 to 35 ft.										
35						Recovery from core runs indicate boulders are possibly blast rock of the PHYLLITE bedrock from other portions of the site.										
	19 13 11 13	S9 10	36.5 38.5	SP-SM	69.5 36.5	Note: Advanced roller bit to 36.5 ft. No water return during advancement. Medium dense brown to tan poorly graded SAND with silt (SP-SM), mps 0.3 in., no structure, no odor, wet PID = ND ppm		5	10	35	40	10				
					67.0 39.0	Note: Casing advanced to 39.0 ft. Water return at 39.0 ft. Organics observed in wash water.										
40	15 8 11 13	S10 8	40.0 42.0	SP-SM		Medium dense brown to tan poorly graded SAND with silt and gravel (SP-SM), mps 0.7 in., no structure, no odor, wet PID = ND ppm		15	10	25	40	10				
						-GLACIOFLUVIAL DEPOSITS-										
45	74 20 14 20	S11 11	44.0 46.0	SM		Dense tan to light brown silty SAND with gravel (SM), mps 0.8 in., no structure, no odor, wet PID = ND ppm	8	35	17	18	19	13				
	20	S12	49.0	SP		Very dense tan poorly graded SAND (SP), mps 0.4 in., no structure, no		5	5	30	55	5				

NOTE: Soil identification based on visual-manual methods of the USCS as practiced by Haley & Aldrich, Inc.

Boring No. LB-03

TEST BORING REPORT

Boring No. LB-03
File No. 41242-000
Sheet No. 3 of 4

Depth (ft)	Sampler Blows per 6 in.	Sample No. & Rec. (in.)	Sample Depth (ft)	USCS Symbol	Stratum Change (ft) Elev/Depth	VISUAL-MANUAL IDENTIFICATION AND DESCRIPTION (Density/consistency, color, GROUP NAME, max. particle size*, structure, odor, moisture, optional descriptions) GEOLOGIC INTERPRETATION	Gravel % Coarse	Gravel % Fine	Sand % Coarse	Sand % Medium	Sand % Fine	Sand % Fines	Field Test Dilatancy	Field Test Toughness	Field Test Plasticity	Field Test Strength
50	21 38 71	18	51.0	SM	56.0 0.45 50.6	odor, wet, bottom 3 in. of spoon was weathered rock with a sandy SILT matrix PID = ND ppm		20	5	15	25	35				
					54.0 12.0	Very dense tan to brown silty SAND with gravel (SM), mps 0.6 in., slightly bonded, no odor, wet -GLACIAL TILL- -WEATHERED BEDROCK- TOP OF BEDROCK 52.0 FT										
55						Note: Advanced roller bit to 54.0 ft. SEE CORE BORING REPORT FOR ROCK DETAILS										
60																

NOTE: Soil identification based on visual-manual methods of the USCS as practiced by Haley & Aldrich, Inc.

Boring No. LB-03

CORE BORING REPORT

Boring No. LB-03
File No. 41242-000
Sheet No. 4 of 4

Depth (ft)	Drilling Rate (min./ft)	Run No.	Run Depth (ft)	Recovery in.	RQD %	Weathering	Elev./ Depth (ft)	Visual Description and Remarks
								SEE TEST BORING REPORT FOR OVERBURDEN DETAILS
55	3.5 5	C1	54.0 56.0	15 0	63 0	Fresh to Slight		Medium, fresh to slightly weathered, dark gray to black, fine grained PHYLLITE with quartzite stringers and bands. Primary joint set high to moderately dipping, close to moderately spaced, rough to smooth, undulating, fresh, open.
	4 3	C2	56.0 58.0	5 0	21 0	Fresh to Slight		Similar to above, with very little to no water return and frequent jamming of core barrel. Note: Advanced roller bit to remove excess cuttings.
60	4 2.5	C3	58.0 60.0	16 4	67 17	Fresh to Slight		Similar to above except with quartzite stringers. -KITTERY FORMATION-
	4.5 5	C4	60.0 62.5	11 4.5	37 15	Fresh to Slight		Similar to above.
65	2 1.5	C5	62.5 64.0	4 0	22 0	Fresh to Slight		Similar to above.
	4.5						42.0 64.0	BOTTOM OF EXPLORATION AT 64.0 FT
70								
75								
80								

NOTES:

1. FOR BORING LOCATION PLAN SEE B-101.
2. ELEVATIONS SHOWN ON THIS SHEET ARE BASED ON PNSY DATUM - SEE V-101 FOR CONVERSION INFORMATION.

GRAPHIC SCALE

CHECK GRAPHIC SCALE BEFORE USING

APPR | DATE | DESCRIPTION | SYM

NAVFAC

SEAL

MN FST A JOINT VENTURE
A/E INFO

APPROVED
David W. Grunfeld
FOR COMMANDER NAVFAC

ACTIVITY: PER DOCUMENT FROM PNSY CODE 980, KITTERY ME

SATISFACTORY TO DATE: 05/09/16

DES: MN | DRW: CK | CHK: MN

PM/DM: NATHAN LIBBY

BRANCH MANAGER: NATHAN MAHER

FEAD/PM&E: AMN BAHROUR

FIRE PROTECTION: N/A

DEPARTMENT OF THE NAVY
NAVAL FACILITIES ENGINEERING COMMAND
PUBLIC WORKS DEPARTMENT - MAINE
PORTSMOUTH NAVAL SHIPYARD

NAVAL FACILITIES ENGINEERING COMMAND ~ MID-ATLANTIC
NAVAL SHIPYARD ~ PORTSMOUTH, NH

KITTERY, MAINE

STRUCTURAL REPAIRS AT BERTHS 11A, 11B AND 11C

BORING LOGS ~ SHEET 6 OF 17

EPROJECT NO.: 1356489

CONSTR. CONTR. NO. N40085-XX-C-XXXX

NAVFAC DRAWING NO. 12716027

SHEET 31 OF 144

B-606 | FP2-16-667

DRAWFORM REVISION: 10 OCTOBER 2014

FILE NAME: S:\1794\Active\179410203\V\TP-104A PNSY Lifting Study\TP-104A PNSY Lifting Study\02 CADD\04 Geotechnical\FP2-16-667.dwg LAYOUT NAME: BORING LOGS - SHEET 6 OF 17 PLOTTED: Friday, May 13, 2016 - 2:30pm USER: cgoodridge

HALEY ALDRICH — TEST BORING REPORT — Boring No. LB-04

Project: PNSY-LIFTING AND HANDLING IMPROVEMENTS DRY DOCK I, KITTERY, ME
Client: FAY, SPOFFORD AND THORNDIKE, INC.
Contractor: NEW ENGLAND BORING CONTRACTORS, INC.

File No. 41242-000; Sheet No. 1 of 1; Start November 25, 2014; Finish December 3, 2014; Driller M. D'Ambrosio; H&A Rep. A. Fleming/M. Dodson; Elevation 106.0 (est.); Datum PNSY; Location See Plan

	Casing	Sampler	Barrel
Type	HW	S	-
Inside Diameter (in.)	4.0	1.375	-
Hammer Weight (lb)	300	140	-
Hammer Fall (in.)	24	30	-

Drilling Equipment and Procedures: Rig Make & Model: Acker AD II Truck; Bit Type: Roller Bit; Drill Mud: None; Casing: HW Driven to 14 ft.; Hoist/Hammer: Cat-Head Safety Hammer; PID Make & Model: MiniRAE 2000

Sampler Blows per 6 in.	Sample No. & Rec. (in.)	Sample Depth (ft)	USCS Symbol	Stratum Change Elev/Depth (ft)	Visual-Manual Identification and Description	% Coarse Gravel	% Fine Gravel	% Coarse Sand	% Medium Sand	% Fine Sand	% Fines
					-ASPHALT-						
10 9 13 65	S1 16	1.0 3.0	SM	105.2 0.8	Medium dense brown to light brown silty SAND with gravel (SM), mps 1.3 in., no visible structure, no odor, dry to moist, 5 % coal-like material, trace mortar-like. PID = ND ppm	15	10	10	20	30	15
105	S2 2	3.5 4.0		103.0 3.0	Note: Cobble from 3.0-3.5 ft. Poor recovery, appears to be cobble fragments. Note: Drill action indicates cobble from 4.0-4.8 ft.						
50/1"	NR	5.0 5.1			No recovery						
9 9 12 14	S3 6	6.0 8.0	GP		Medium dense gray poorly graded GRAVEL with sand (GW), mps 1.375 in., no structure, no odor, wet. PID = ND ppm. Note: Total water loss below 6.0 ft. beneath casing. -FILL-	50	25	15	5		5
40 63 14 14	S4 2	9.0 11.0	GP		Similar to above except very dense and no silt in recovery. PID = ND ppm	65	25	10			
					Note: Total water loss below 9.0 ft. beneath casing. Note: Occasional small cobbles. Note: One end of 5 ft section of casing broke while attempting to straighten boring while at 11.0 ft.						
45 10 9 12	S5 3	14.0 16.0	GP	92.5 13.5	Medium dense gray poorly graded GRAVEL (GP), mps 1.375 in., angular (coarse), no odor, wet. PID = ND ppm. -FILL-	65	25	10			
				90.0 16.0	Note: Total water loss at 14.0 ft. below casing. Note: Made second attempt 3 ft. east, casing broke while straightening at 17.0 ft. See LB-04A for third attempt. BOTTOM OF EXPLORATION 16.0 FT						

Water Level Data:

Date	Time	Elapsed Time (hr.)	Bottom of Casing	Bottom of Hole	Water
11/25/2014	13:15	0.5	14.0	16.0	3.9

Sample ID: O - Open End Rod; T - Thin Wall Tube; U - Undisturbed Sample; S - Split Spoon Sample. Well Diagram: Riser Pipe, Screen, Filter Sand, Cuttings, Grout, Concrete, Bentonite Seal.

Summary: Overburden (ft) 16.0; Rock Cored (ft) -; Samples 5S; Boring No. LB-04

Field Tests: Dilatancy: R - Rapid S - Slow N - None; Toughness: L - Low M - Medium H - High; Plasticity: N - Nonplastic L - Low M - Medium H - High; Dry Strength: N - None L - Low M - Medium H - High V - Very High

[1]Note: Maximum particle size is determined by direct observation within the limitations of sampler size.
Note: Soil identification based on visual-manual methods of the USCS as practiced by Haley & Aldrich, Inc.

HALEY ALDRICH — TEST BORING REPORT — Boring No. LB-04A

Project: PNSY-LIFTING AND HANDLING IMPROVEMENTS DRY DOCK I, KITTERY, ME
Client: FAY, SPOFFORD AND THORNDIKE, INC.
Contractor: NEW ENGLAND BORING CONTRACTORS, INC.

File No. 41242-000; Sheet No. 1 of 2; Start December 3, 2014; Finish December 4, 2014; Driller M. D'Ambrosio; H&A Rep. A. Fleming; Elevation 106.0 (est.); Datum PNSY; Location See Plan

	Casing	Sampler	Barrel
Type	HW	-	NX
Inside Diameter (in.)	4.0	-	2.0
Hammer Weight (lb)	300	-	-
Hammer Fall (in.)	24	-	-

Drilling Equipment and Procedures: Rig Make & Model: Acker AD II Truck; Bit Type: Roller Bit; Drill Mud: None; Casing: HW Driven to 13.5 ft.; Hoist/Hammer: Cat-Head Safety Hammer; PID Make & Model: MiniRAE 2000

Note: Location attempted a third time 3 ft. north of original attempt to extend beyond 13.5 ft.

-FILL-

92.5 / 13.5 — Note: Casing refusal at 13.5 ft.
SEE CORE BORING REPORT FOR ROCK DETAILS

Water Level Data: NOT OBSERVED

Summary: Overburden (ft) 13.5; Rock Cored (ft) 10.0; Samples 2C; Boring No. LB-04A

Field Tests: Dilatancy: R - Rapid S - Slow N - None; Toughness: L - Low M - Medium H - High; Plasticity: N - Nonplastic L - Low M - Medium H - High; Dry Strength: N - None L - Low M - Medium H - High V - Very High

[1]Note: Maximum particle size is determined by direct observation within the limitations of sampler size.
Note: Soil identification based on visual-manual methods of the USCS as practiced by Haley & Aldrich, Inc.

HALEY ALDRICH — CORE BORING REPORT — Boring No. LB-04A

File No. 41242-000; Sheet No. 2 of 2

SEE TEST BORING REPORT FOR OVERBURDEN DETAILS

Drilling Rate (min./ft)	Run No.	Run Depth (ft)	Recovery in.	Recovery % (RQD)	Weathering	Elev./Depth (ft)	Visual Description and Remarks
2.5, 3, 2, 1, 2.5, 3	C1	13.5 18.5	36	60	Slight to Moderate	92.5 13.5	Moderately hard, slightly to moderately weathered, light to dark gray fine grained to aphanite, PHYLLITE. Bedding/foliation indistinct, moderately dipping. Primary joint set parallel with bedding, very closely to moderately spaced, rough to smooth, planar/undulating, fresh to discolored, tight to open. Note: First 2 ft. of coring the driller was able to have return on water, after first 2 ft. no return. Note: In third and fourth foot core barrel jumped down roughly 6 in. in less than 5 seconds. -BLAST ROCK FILL-
2.5, 3.5, 2, 2, 2	C2	18.5 23.5	25	42	Slight to Moderate		Moderately hard, slightly to moderately weathered, light to dark gray, fine grained to aphanitic, PHYLLITE. Bedding/foliation indistinct, moderately dipping. Primary joint set parallel with bedding, very closely to moderately spaced, rough to smooth, planar/undulating, fresh to discolored, tight to open. Note: No water return at all.
						82.5 23.5	BOTTOM OF EXPLORATION 23.5 FT. Note: Unable to advance core barrel any further without reaming out core hole, with no water return too time consuming to continue with boring.

HALEY ALDRICH — TEST BORING REPORT — Boring No. LB-05

Project: PNSY-LIFTING AND HANDLING IMPROVEMENTS DRY DOCK I, KITTERY, ME
Client: FAY, SPOFFORD AND THORNDIKE, INC.
Contractor: NEW ENGLAND BORING CONTRACTORS, INC.

File No. 41242-000; Sheet No. 1 of 3; Start December 1, 2014; Finish December 2, 2014; Driller M. D'Ambrosio; H&A Rep. M. Dodson/A. Fleming; Elevation 106.0 (est.); Datum PNSY; Location See Plan

	Casing	Sampler	Barrel
Type	HW	S	NX
Inside Diameter (in.)	4.0	1.375	2.0
Hammer Weight (lb)	300	140	-
Hammer Fall (in.)	24	30	-

Drilling Equipment and Procedures: Rig Make & Model: Acker AD II Truck; Bit Type: Roller Bit; Drill Mud: None; Casing: HW Driven to 38.5 ft.; Hoist/Hammer: Cat-Head Safety Hammer; PID Make & Model: MiniRAE 2000

Sampler Blows per 6 in.	Sample No. & Rec. (in.)	Sample Depth (ft)	USCS Symbol	Stratum Change Elev/Depth (ft)	Visual-Manual Identification and Description	% Coarse Gravel	% Fine Gravel	% Coarse Sand	% Medium Sand	% Fine Sand	% Fines	Dilatancy	Toughness	Plasticity
				105.7 0.3	-ASPHALT-									
8 9 11 14	S1 1.5	1.0 3.0	CL		Very stiff brown to gray brown sandy lean CLAY with gravel (CL), mps 1.3 in., disturbed, no odor, moist, occasional silty/clayey SAND layers. PID = ND ppm	10	5	10	10	15	50	N	L	L
15 36 26 34	S2 16	3.0 5.0	CL		Similar to above except hard. -FILL- PID = ND ppm	10	10	5	10	15	50	N	L	L
24 10 7 8	S3 8	5.0 7.0	CL		Very stiff brown to gray brown sandy lean CLAY with gravel (CL), mps 1.1 in., no structure, no odor, wet. PID = ND ppm	5	15	10	5	15	50	N	L	L
8 9 6 6	S4 18	7.0 9.0	CL	98.0 8.0	Stiff olive brown gravelly lean CLAY with sand (CL), mps 0.8 in., no structure, no odor, wet. PID = ND ppm	10	15	5	5	10	55	N	L	L
7 7 6 6	S5 7	9.0 11.0	CL		Similar to above. PID = ND ppm									
1 1 5 2	S6 2	14.0 16.0	CL		Medium stiff brown to olive brown sandy lean CLAY (CL), mps 0.3 in., no structure, moderate unnatural solvent/sewage like odor, wet. PID = ND ppm. -FILL-		5	5	10	20	60	N	L	L
2 3	S7 11	19.0 21.0	CL		Similar to above except strong odor. PID = 8.8 ppm		5	10	5	20	60	N	L	L

Water Level Data:

Date	Time	Elapsed Time (hr.)	Bottom of Casing	Bottom of Hole	Water
12/1/2014	-	-	9.0	11.0	~10

Summary: Overburden (ft) 43.5; Rock Cored (ft) 12.5; Samples 11S, 7C; Boring No. LB-05

Field Tests: Dilatancy: R - Rapid S - Slow N - None; Toughness: L - Low M - Medium H - High; Plasticity: N - Nonplastic L - Low M - Medium H - High; Dry Strength: N - None L - Low M - Medium H - High V - Very High

[1]Note: Maximum particle size is determined by direct observation within the limitations of sampler size.
Note: Soil identification based on visual-manual methods of the USCS as practiced by Haley & Aldrich, Inc.

HALEY ALDRICH — TEST BORING REPORT — Boring No. LB-05

File No. 41242-000; Sheet No. 2 of 3

Sampler Blows per 6 in.	Sample No. & Rec. (in.)	Sample Depth (ft)	USCS Symbol	Stratum Change Elev/Depth (ft)	Visual-Manual Identification and Description	% Coarse Gravel	% Fine Gravel	% Coarse Sand	% Medium Sand	% Fine Sand	% Fines	Dilatancy	Toughness	Plasticity
2 3					-FILL-									
2 3 2 2	S8 24	24.0 26.0	CL	82.0 24.0	Medium stiff olive brown to gray brown lean CLAY (CL), mps 0.1 in., no structure, no odor, wet. -MARINE CLAY- PID = ND ppm				5	5	90	N	M	M
1 2 5 7	S9 20	29.0 31.0	CL		Medium stiff olive brown lean CLAY with sand (CL), mps 0.1 in., no visible structure, no odor, wet. PID = ND ppm				5	10	85	N	M	M
				73.5 32.5	Note: Drill action indicates boulder or cobbles from 32.5 to 33 ft.									
32 88 47 85	S10 12	34.0 36.0	SM		Very dense tan to light brown silty SAND with gravel (SM), mps 1.0 in., no structure, no odor, wet. PID = ND ppm. -GLACIAL TILL- Note: Could not advance casing past 38.5 ft.	20	17	9	15	19	20			
100/5"	S11 1	39.0 39.4	SP-SM		Very dense tan poorly graded SAND with silt and gravel (SP-SM), mps 0.8 in., no structure, no odor, wet, 70% black fissile shale. TOP OF BEDROCK 41.0 FT	5	15	15	25	30	10			
				65.0 41.0	Note: Advanced roller bit to 43.5 ft. SEE CORE BORING REPORT FOR ROCK DETAILS									

NOTE: Soil identification based on visual-manual methods of the USCS as practiced by Haley & Aldrich, Inc. Boring No. LB-05

HALEY ALDRICH — CORE BORING REPORT — Boring No. LB-05

File No. 41242-000; Sheet No. 3 of 3

SEE TEST BORING REPORT FOR OVERBURDEN DETAILS

Drilling Rate (min./ft)	Run No.	Run Depth (ft)	Recovery in.	Recovery %	Weathering	Elev./Depth (ft)	Visual Description and Remarks
4, 6, 7	C1	43.5 46.0	16 / 0	53 / 0	Moderate		Hard to very hard, moderately weathered gray to light gray aphanitic PHYLLITE with quartzite stringers. Foliation/bedding indistinct., low angle, primary joint set parallel with bedding, closely spaced, rough to smooth, undulating, fresh to discolored with iron staining, tight to open.
6.5	C2	46.0 47.0	3 / 0	25 / 0	Moderate		Similar to above except frequent jamming of core barrel
3.5, 6, 8	C3	47.0 50.0	11 / 0	31 / 0	Moderate		Similar to above. -KITTERY FORMATION-
10	C4	50.0 51.0	0 / 0	0 / 0			Recovery of three 0.3 in. fragments, frequent jamming of core barrel.
8.5, 8	C5	51.0 53.0	6 / 4	25 / 17	Moderate		Hard to very hard moderately weathered gray to light gray aphanitic PHYLLITE with quartzite stringers. Foliation/bedding indistinct. Primary joint set low angle, closely spaced, rough to smooth, undulating, fresh to discolored with iron staining, tight to open.
6.5	C6	53.0 54.0	0 / 0	0 / 0			No recovery, frequent jamming of core barrel.
7.5, 7	C7	54.0 56.0	18 / 0	75 / 0	Moderate		Similar to C5.
						50.0 56.0	BOTTOM OF EXPLORATION 56.0 FT

NOTES:

1. FOR BORING LOCATION PLAN SEE B-101.
2. ELEVATIONS SHOWN ON THIS SHEET ARE BASED ON PNSY DATUM – SEE V-101 FOR CONVERSION INFORMATION.

GRAPHIC SCALE

CHECK GRAPHIC SCALE BEFORE USING

SYM	DESCRIPTION	DATE	APPR

SEAL: COMMONWEALTH OF MASSACHUSETTS — MARC NICOLAZZO — CIVIL — No. 51124 — REGISTERED PROFESSIONAL ENGINEER

MN FST A JOINT VENTURE — A/E INFO

APPROVED: David Greenfield — FOR COMMANDER NAVFAC

ACTIVITY: PER DOCUMENT FROM PNSY CODE 980, KITTERY ME
SATISFACTORY TO — DATE: 05/09/16

DES MN | DRW CK | CHK MN
PM/DM: NATHAN LIBBY
BRANCH MANAGER: NATHAN MAHER
FEAD/PM&E: AMIN BAHROUR
FIRE PROTECTION: N/A

DEPARTMENT OF THE NAVY — NAVAL FACILITIES ENGINEERING COMMAND
NAVAL FACILITIES ENGINEERING COMMAND ~ MID-ATLANTIC
PUBLIC WORKS DEPARTMENT – MAINE — NAVAL SHIPYARD – PORTSMOUTH, NH
PORTSMOUTH NAVAL SHIPYARD — KITTERY, MAINE

STRUCTURAL REPAIRS AT BERTHS 11A, 11B AND 11C

BORING LOGS – SHEET 7 OF 17

EPROJECT NO.: 1356489
CONSTR. CONTR. NO. N40085-XX-C-XXXX
NAVFAC DRAWING NO. 12716028
SHEET 32 OF 144
B-607 | FP2-16-668

FILE NAME: S:\1794\Active\179410203\r\TP-104A PNSY Lifting Study\TP-104A PNSY Lifting Study\02 CADD\04 Geotechnical\FP2-16-669.dwg LAYOUT NAME: BORING LOGS - SHEET 8 OF 17 PLOTTED: Friday, May 13, 2016 - 2:31pm USER: cgoodridge

HALEY ALDRICH — TEST BORING REPORT — Boring No. WB-01

Project: PNSY-LIFTING AND HANDLING IMPROVEMENTS DRY DOCK I, KITTERY, ME
Client: FAY, SPOFFORD AND THORNDIKE, INC.
Contractor: NEW ENGLAND BORING CONTRACTORS, INC.

File No. 41242-000; Sheet No. 1 of 2; Start December 1, 2014; Finish December 1, 2014; Driller S. Cooley; H&A Rep. M. Dodson; Elevation 70.0 (est.); Datum PNSY; Location See Plan

	Casing	Sampler	Barrel
Type	HW	S	NX
Inside Diameter (in.)	4.0	1.375	2.0
Hammer Weight (lb)	300	140	-
Hammer Fall (in.)	24	30	-

Drilling Equipment and Procedures: Rig Make & Model: Diedrich D-45 Skid; Bit Type: Roller Bit; Drill Mud: None; Casing: HW Driven to 20.0 ft.; Hoist/Hammer: Cat-Head Safety Hammer; PID Make & Model: MiniRAE 3000

Depth (ft)	Sampler Blows per 6 in.	Sample No. & Rec. (in.)	Sample Depth (ft)	USCS Symbol	Stratum Change Elev/Depth (ft)	Visual-Manual Identification and Description	Gravel % Coarse	Gravel % Fine	Sand % Coarse	Sand % Medium	Sand % Fine	% Fines	Dilatancy	Toughness	Plasticity	Strength
0	W O R	S1 24	0.0 6.0	OL/ OH		Very soft black ORGANIC SOIL with sand (OL/OH), mps 0.3 in., no structure, slight H_2S odor, wet, occasional trace sheen, 5% shell particles/fragments, trace organic fibers and worms. PID = ND ppm. Note: Weight of rod (WOR) from 0 to 6 ft. -RIVER BOTTOM DEPOSITS-		5		5	15	75	S	N	N	
5	2 3 4 7	S2 16	6.0 8.0	OL/ OH		Medium stiff black sandy ORGANIC SOIL (OL/OH), mps 1.2 in., no structure, slight H_2S odor, wet, 5-10% sheen, 10% shell fragments and specks, trace organic fibers. PID = ND ppm	5	5	5	10	20	55	S	N	N	
					61.5 8.5	Note: Drill action indicates stratum change at 8.5 ft. Note: Very "choppy" drilling with rounded/angular rock chips in wash - probable -GLACIOFLUVIAL DEPOSITS-										
10					60.0 10.0	Note: Drill action indicates cobbles from 9.0-10.0 ft.										
	14 25 38 50	S3 5	10.5 12.5	GM		Very dense gray/light gray silty GRAVEL with SAND (GM), mps 1.2 in., no structure, no odor, wet. PID = ND ppm. -GLACIAL TILL-	33	19	7	8	18	15				
15	7 20 31 54	S4 4	15.0 16.0	SM		Similar to above except not with coarse gravel. PID = ND ppm		5	5	10	55	25				
		S4A 6	16.0 17.0	SM	54.0 16.0	Very dense gray light gray silty SAND with gravel (SM), mps 0.9 in, no visible structure, no odor, wet, sample comprised of 100% highly weathered bedrock. -WEATHERED BEDROCK- PID = ND ppm	5	25	25	15	15	15				
20					52.2 17.8	TOP OF BEDROCK 17.8 FT. Note: Advanced roller bit to 18.0 ft. SEE CORE BORING REPORT FOR ROCK DETAILS										

Water Level Data:

Date	Time	Elapsed Time (hr.)	Depth (ft) to: Bottom of Casing	Bottom of Hole	Water
12/1/2014	11:45	0.1	18.0	28.0	WATER AT LEVEL OF RIVER

Sample ID: O - Open End Rod; T - Thin Wall Tube; U - Undisturbed Sample; S - Split Spoon Sample
Well Diagram: Riser Pipe; Screen; Filter Sand; Cuttings; Grout; Concrete; Bentonite Seal
Summary: Overburden (ft) 18.0; Rock Cored (ft) 10.0; Samples 4S, 2C; Boring No. WB-01

Field Tests: Dilatancy: R - Rapid S - Slow N - None; Toughness: L - Low M - Medium H - High; Plasticity: N - Nonplastic L - Low M - Medium H - High; Dry Strength: N - None L - Low M - Medium H - High V - Very High
[1]Note: Maximum particle size is determined by direct observation within the limitations of sampler size.
Note: Soil identification based on visual-manual methods of the USCS as practiced by Haley & Aldrich, Inc.

HALEY ALDRICH — CORE BORING REPORT — Boring No. WB-01

File No. 41242-000; Sheet No. 2 of 2

Depth (ft)	Drilling Rate (min./ft)	Run No.	Run Depth (ft)	Recovery/RQD in.	Recovery/RQD %	Weathering	Elev./Depth (ft)	Visual Description and Remarks
								SEE TEST BORING REPORT FOR OVERBURDEN DETAILS
	5, 4, 6 (20), 5, 8	C1	18.0 23.0	48 0	80 0	Moderate to Slight		Hard to near very hard, moderately to slightly weathered, gray aphanitic to fine grained PHYLLITE. Foliation/bedding dipping at high angles. Recovery highly fractured, few intact core sections. Joint surfaces at varying angles, rough to smooth, planar, undulating, fresh to discolored. Note: Barrel jammed at 21.0 ft. and frequently jammed during coring attempt from 22 to 23 ft. Reamed with bit and redrove casing. Note: Hole collapsed, unable to re-advance core barrel to bottom.
25	5, 6, 7, 8, 7	C2	23.0 28.0	49 39	82 65	Fresh		Rock type similar to above except fresh. Primary joint set moderately dipping, closely to moderately spaced, rough to smooth, planar, fresh to discolored. -KITTERY FORMATION-
							42.0 28.0	BOTTOM OF EXPLORATION 28.0 FT

HALEY ALDRICH — TEST BORING REPORT — Boring No. WB-02

Project: PNSY-LIFTING AND HANDLING IMPROVEMENTS AT DRY DOCK I, KITTERY, ME
Client: FAY, SPOFFORD, AND THORNDIKE, INC.
Contractor: NEW ENGLAND BORING CONTRACTORS, INC.

File No. 41242-000; Sheet No. 1 of 2; Start January 21, 2015; Finish January 22, 2015; Driller S. Cooley; H&A Rep. M. Dodson; Elevation 63.5 (est.); Datum PNSY; Location See Plan

	Casing	Sampler	Barrel
Type	HW	S	NX
Inside Diameter (in.)	4.0	1.375/3.0	2.0
Hammer Weight (lb)	300	140/300	-
Hammer Fall (in.)	24	30/24	-

Drilling Equipment and Procedures: Rig Make & Model: CME 45 Skid; Bit Type: Roller Bit; Drill Mud: None; Casing: HW Driven to 8.2 ft.; Hoist/Hammer: Cat-Head Safety Hammer; PID Make & Model: MiniRAE 3000

Depth (ft)	Sampler Blows per 6 in.	Sample No. & Rec. (in.)	Sample Depth (ft)	USCS Symbol	Stratum Change Elev/Depth (ft)	Visual-Manual Identification and Description	Gravel % Coarse	Gravel % Fine	Sand % Coarse	Sand % Medium	Sand % Fine	% Fines	Dilatancy	Toughness	Plasticity	Strength
0	*WOH *30 *5 *6	S1 15	0.0 2.0	SM		Dense black (organic) silty SAND with gravel (SM), mps 2.5 in., no structure, unnatural industrial-like odor, wet, trace to 5% shell fragments. *Designates 3 in. spoon with 300 lb hammer with 24 in. fall. PID = 4.5/0.5 ppm	10	15	15	15	25	20				
	5 7 6 6	S2 10	2.0 4.0	SM OL/ OH		Similar to above except medium dense interbedded with 40% black sandy ORGANIC SOIL (OL/OH), faint unnatural industrial-like odor, wet. PID = 0.9/0.5 ppm	10	10	10	25	25	20				
									5	10	25	60				
5	5 8 10 12	S3 11	4.0 6.0	SP-SM		-RIVER BOTTOM DEPOSITS- Medium dense black poorly graded SAND with (organic) silt (SP-SM), mps 1.0 in., occasional sandy organic soil layers (5-10%), faint unnatural industrial-like odor, wet. PID = ND ppm	5	5	15	25	40	10				
	9 13 100/5"	S4 9	6.0 7.4	SP		Very dense dark gray to black poorly graded SAND (SP), mps 0.5 in., no visible structure, no odor, wet. PID = ND ppm		10	5	15	65	5				
				SM	56.3 7.2	Very dense gray silty SAND with gravel (SM), mps 1.375 in., visible rock matrix, no odor, wet. PID = ND ppm										
					55.3 8.2	-WEATHERED BEDROCK- Note: Advanced roller bit to 7.7 ft. and drove casing. Advanced roller bit again ahead of casing and rock was observed to be weathered. Advanced roller bit and casing to top of intact rock at 8.2 ft. -TOP OF BEDROCK 8.2 FT- SEE CORE BORING REPORT FOR ROCK DETAILS										

Water Level Data:

Date	Time	Elapsed Time (hr.)	Depth (ft) to: Bottom of Casing	Bottom of Hole	Water
1/22/2015	-	-	8.2	22.7	WATER AT LEVEL OF RIVER

Sample ID: O - Open End Rod; T - Thin Wall Tube; U - Undisturbed Sample; S - Split Spoon Sample
Well Diagram: Riser Pipe; Screen; Filter Sand; Cuttings; Grout; Concrete; Bentonite Seal
Summary: Overburden (ft) 8.2; Rock Cored (ft) 14.5; Samples 4S, 4C; Boring No. WB-02

Field Tests: Dilatancy: R - Rapid S - Slow N - None; Toughness: L - Low M - Medium H - High; Plasticity: N - Nonplastic L - Low M - Medium H - High; Dry Strength: N - None L - Low M - Medium H - High V - Very High
[1]Note: Maximum particle size is determined by direct observation within the limitations of sampler size.
Note: Soil identification based on visual-manual methods of the USCS as practiced by Haley & Aldrich, Inc.

HALEY ALDRICH — CORE BORING REPORT — Boring No. WB-02

File No. 41242-000; Sheet No. 2 of 2

Depth (ft)	Drilling Rate (min./ft)	Run No.	Run Depth (ft)	Recovery/RQD in.	Recovery/RQD %	Weathering	Elev./Depth (ft)	Visual Description and Remarks
								SEE TEST BORING REPORT FOR OVERBURDEN DETAILS
	7, 9, 10	C1	8.2 10.7	21 0	70 0	Moderate		Moderately hard, moderately weathered, gray to dark gray, aphanitic to fine grained PHYLLITE. Weakly foliated, difficult to discern but dipping at moderate to high angles, frequent planar discolored joints at varying intersecting angles.
10	7, 8, 9, 17	C2	10.7 14.7	45 18	94 38	Moderate to Slight		Similar to above. Difficult to discern primary joint set due to amount of joints and frequent breaks. Appears to be a high to moderate angle set and a horizontal to low dipping set. Highly fractured zone from 12.3-13.3 ft including breaks along quartzite beds. RQD from approximately 11.5-12.3 ft and approximately 13.4-14.1 ft. -KITTERY FORMATION-
15	7, 10, 18	C3	14.7 17.7	30 14	83 39	Moderate to Slight		Moderately hard, slightly weathered, dark gray, aphanitic PHYLLITE. Extremely thin bedding dipping at moderate to near high angles. Primary joint set likely parallel with bedding but only three joints visible in core run. Primary joint set rough, planar, discolored with quartzite infilling, tight to open.
20	6, 7, 8, 11, 8	C4	17.7 22.7	60 4	100 7	Moderate to Slight		Similar to above. Bedding/foliation vertical top 1.0 ft and indiscernible 18.7-22.7 ft. Primary joint set horizontal to dipping at low angles, very closely to moderately spaced, rough to smooth, planar/undulating, discolored, tight. Secondary joint set dipping at moderate to high angles, closely to moderately spaced, rough, planar, tight to open. One vertical joint from 19.1 to 20.9 ft is open with vuggy void space, discolored/weathered, green to brown with quartzite on surfaces.
							40.8 22.7	BOTTOM OF EXPLORATION 22.7 FT

HALEY ALDRICH — TEST BORING REPORT — Boring No. WB-03

Project: PNSY-LIFTING AND HANDLING IMPROVEMENTS DRY DOCK I, KITTERY, ME
Client: FAY, SPOFFORD AND THORNDIKE, INC.
Contractor: NEW ENGLAND BORING CONTRACTORS, INC.

File No. 41242-000; Sheet No. 1 of 2; Start December 12, 2014; Finish December 12, 2014; Driller S. Cooley; H&A Rep. M. Dodson; Elevation 54.4 (est.); Datum PNSY; Location See Plan

	Casing	Sampler	Barrel
Type	HW	S	NX
Inside Diameter (in.)	4.0	1.375	2.0
Hammer Weight (lb)	300	140	-
Hammer Fall (in.)	24	30	-

Drilling Equipment and Procedures: Rig Make & Model: Diedrich D-45 Skid; Bit Type: Roller Bit; Drill Mud: None; Casing: HW Driven to 12 ft.; Hoist/Hammer: Cat-Head Safety Hammer; PID Make & Model: MiniRAE 3000

Depth (ft)	Sampler Blows per 6 in.	Sample No. & Rec. (in.)	Sample Depth (ft)	USCS Symbol	Stratum Change Elev/Depth (ft)	Visual-Manual Identification and Description	Gravel % Coarse	Gravel % Fine	Sand % Coarse	Sand % Medium	Sand % Fine	% Fines	Dilatancy	Toughness	Plasticity	Strength
0	5 15 21 13	S1 6	0.0 1.0	SM		Dense gray to black (organic) silty SAND (SM), mps 1.1 in., no structure, H_2S odor, wet. PID = ND ppm	5		10	15	35	35				
		S1A 6	1.0 2.0	SW-SM	53.4 1.0	-RIVER BOTTOM DEPOSITS- Dense gray brown well graded SAND with silt (organic) (top half only) (SW-SM), mps 1.2 in. H_2S odor, wet. PID = ND ppm	5		10	20	55	10				
							5	15	15	25	35	5				
						Note: Drill action/wash from 2 to 6 ft. indicates sand, gravel and shells, tan to brown to near black. -GLACIOFLUVIAL DEPOSITS-										
5	8 30 66 30	S2 7	5.5 7.5	GP		Very dense brown poorly graded GRAVEL with sand (GP), mps 0.8 in., no structure, no odor, wet, possible coarse gravel or cobble pushed below 6.7 ft. PID = ND ppm	6	55	17	15	4	3				
10	13 100/3"	S3 4	11.0 11.8	SP		Similar to above except medium dense. PID = ND ppm			15	50	25	10				
		S3A 2	11.8 12.0		42.7 42.4 12.0	Very dense gray-brown highly weathered bedrock -WEATHERED BEDROCK- Note: Drill action indicates bedrock at 12.0 ft. TOP OF BEDROCK 12.0 FT. SEE CORE BORING REPORT FOR ROCK DETAILS										

Water Level Data:

Date	Time	Elapsed Time (hr.)	Depth (ft) to: Bottom of Casing	Bottom of Hole	Water
12/12/2014	13:00	0.1	12.0	17.0	WATER AT LEVEL OF RIVER

Sample ID: O - Open End Rod; T - Thin Wall Tube; U - Undisturbed Sample; S - Split Spoon Sample
Well Diagram: Riser Pipe; Screen; Filter Sand; Cuttings; Grout; Concrete; Bentonite Seal
Summary: Overburden (ft) 12.0; Rock Cored (ft) 5.0; Samples 3S, 1C; Boring No. WB-03

Field Tests: Dilatancy: R - Rapid S - Slow N - None; Toughness: L - Low M - Medium H - High; Plasticity: N - Nonplastic L - Low M - Medium H - High; Dry Strength: N - None L - Low M - Medium H - High V - Very High
[1]Note: Maximum particle size is determined by direct observation within the limitations of sampler size.
Note: Soil identification based on visual-manual methods of the USCS as practiced by Haley & Aldrich, Inc.

HALEY ALDRICH — CORE BORING REPORT — Boring No. WB-03

File No. 41242-000; Sheet No. 2 of 2

Depth (ft)	Drilling Rate (min./ft)	Run No.	Run Depth (ft)	Recovery/RQD in.	Recovery/RQD %	Weathering	Elev./Depth (ft)	Visual Description and Remarks
								SEE TEST BORING REPORT FOR OVERBURDEN DETAILS
15	6, 5, 6, 6, 6	C1	12.0 17.0	54 20	90 33	Fresh	42.4 12.0	Hard to very hard, fresh, light to dark gray, fine gravel to aphanite PHYLLITE with quartzite stringers. Occasional bedding/foliation evident, moderately dipping to near horizontal. Primary joint set dipping at low angle, closely to moderately spaced, rough to smooth planar, fresh to discolored, tight. Multiple high angle joints along quartz veins from 14.8-15.2 ft. and 15.5-15.8 ft., rough, planar/undulating, discolored, tight. -KITTERY FORMATION- Note: Due to the strength of current pushing barge to the northwest, the pipe is flexed at a severe angle and cannot continue drilling.
							37.4 17.0	BOTTOM OF EXPLORATION 17.0 FT.

NOTES:

1. FOR BORING LOCATION PLAN SEE B-101.
2. ELEVATIONS SHOWN ON THIS SHEET ARE BASED ON PNSY DATUM – SEE V-101 FOR CONVERSION INFORMATION.

GRAPHIC SCALE

CHECK GRAPHIC SCALE BEFORE USING

SYM	DESCRIPTION	DATE	APPR

NAVFAC

SEAL: COMMONWEALTH OF MASSACHUSETTS MARC NICOLAZZO CIVIL No. 51724 REGISTERED PROFESSIONAL ENGINEER

MN FST A JOINT VENTURE
A/E INFO

APPROVED David Greenfield
FOR COMMANDER NAVFAC

ACTIVITY: PER DOCUMENT FROM PNSY CODE 980, KITTERY ME
SATISFACTORY TO DATE: 05/09/16

DES MN DRW CK CHK MN
PM/DM: NATHAN LIBBY
BRANCH MANAGER: NATHAN MAHER
FEAD/PM&E: AMIN BAHROUR
FIRE PROTECTION: N/A

DEPARTMENT OF THE NAVY
NAVAL FACILITIES ENGINEERING COMMAND
NAVAL FACILITIES ENGINEERING COMMAND ~ MID-ATLANTIC
PUBLIC WORKS DEPARTMENT - MAINE
NAVAL SHIPYARD - PORTSMOUTH, NH
PORTSMOUTH NAVAL SHIPYARD
KITTERY, MAINE

STRUCTURAL REPAIRS AT BERTHS 11A, 11B AND 11C

BORING LOGS - SHEET 8 OF 17

EPROJECT NO.: 1356489
CONSTR. CONTR. NO. N40085-XX-C-XXXX
NAVFAC DRAWING NO. 12716029
SHEET 33 OF 144
B-608 FP2-16-669

DRAWFORM REVISION: 10 OCTOBER 2014

HALEY ALDRICH — TEST BORING REPORT — Boring No. WB-04

Project: PNSY-LIFTING AND HANDLING IMPROVEMENTS DRY DOCK I, KITTERY, ME
Client: FAY, SPOFFORD AND THORNDIKE, INC.
Contractor: NEW ENGLAND BORING CONTRACTORS, INC.

File No. 41242-000
Sheet No. 1 of 2
Start: November 26, 2014
Finish: December 1, 2014
Driller: S. Cooley
H&A Rep.: M. Dodson
Elevation: 73.5 (est.)
Datum: PNSY
Location: See Plan

	Casing	Sampler	Barrel
Type	HW	S	NX
Inside Diameter (in.)	4.0	1.375/3.0	2.0
Hammer Weight (lb)	300	140	-
Hammer Fall (in.)	24	30	-

Drilling Equipment and Procedures: Rig Make & Model: Diedrich D-45 Skid; Bit Type: Roller Bit; Drill Mud: None; Casing: HW Driven to 10 ft.; Hoist/Hammer: Cat-Head Safety Hammer; PID Make & Model: MiniRAE 3000

Depth (ft)	Sampler Blows per 6 in.	Sample No. & Rec. (in.)	Sample Depth (ft)	USCS Symbol	Stratum Change Elev/Depth (ft)	Visual-Manual Identification and Description	% Coarse Gravel	% Fine Gravel	% Coarse Sand	% Medium Sand	% Fine Sand	% Fines	Dilatancy	Toughness	Plasticity	Strength
0	WOR/24"	S1 8	0.0 2.0	OL/OH		Very soft black sandy ORGANIC SOIL (OL/OH), mps 1.0 in., less sandy top 2 in. of recovery, H_2S odor, wet, 5% shells/fragments, trace wood fibers PID = ND ppm	5	5	5	10	20	55	R/S	N	N	
	WOR/12"	S2 3	2.0 3.0	OL/OH		Similar to above except slightly increased sand content PID = ND ppm	5		5	10	30	50				
	*11 2 3 2	S3 19	3.0 5.0	SM	70.5 3.0	Black (organic) silty SAND (SM), mps 2.5 in., layered, occasionally more sandy or silty, slight H_2S/organic odor, wet, trace shells *Designates use of 3 in. spoon -RIVER BOTTOM DEPOSITS-		1	4	69	19	7				
					65.5 8.0	Note: Casing refusal at 8.0 ft. on probable weathered bedrock -WEATHERED BEDROCK-										
					65.0 8.5	Note: Advanced roller bit to 9.0 ft. Note: Borehole was abandoned at 9.0 ft. on 11/26/2014. Boring was redrilled without sampling on 12/1/2014 and cored. TOP OF BEDROCK 8.5 FT SEE CORE BORING REPORT FOR ROCK DETAILS										

Water Level Data:

Date	Time	Elapsed Time (hr.)	Depth (ft) to: Bottom of Casing	Bottom of Hole	Water
12/1/2014	-	-	10.0	18.5	WATER AT LEVEL OF RIVER

Sample ID: O - Open End Rod; T - Thin Wall Tube; U - Undisturbed Sample; S - Split Spoon Sample
Well Diagram: Riser Pipe; Screen; Filter Sand; Cuttings; Grout; Concrete; Bentonite Seal
Summary: Overburden (ft) 8.5; Rock Cored (ft) 10.0; Samples 3S,4C
Boring No. WB-04

Field Tests: Dilatancy: R - Rapid S - Slow N - None; Toughness: L - Low M - Medium H - High; Plasticity: N - Nonplastic L - Low M - Medium H - High; Dry Strength: N - None L - Low M - Medium H - High V - Very High

†Note: Maximum particle size is determined by direct observation within the limitations of sampler size.
Note: Soil identification based on visual-manual methods of the USCS as practiced by Haley & Aldrich, Inc.

HALEY ALDRICH — CORE BORING REPORT — Boring No. WB-04

File No. 41242-000
Sheet No. 2 of 2

SEE TEST BORING REPORT FOR OVERBURDEN DETAILS

Drilling Rate (min./ft)	Run No.	Run Depth (ft)	Recovery in.	RQD %	Weathering	Elev./Depth (ft)	Visual Description and Remarks
5, 4, 5	C1	8.5 10.0	10 / 0	56 / 0	Moderate	65.0 8.5	Moderately hard, moderately weathered, light to dark gray, fine grained to aphanitic PHYLLITE. Foliation dipping at moderate to near high angles. Recovery is highly fractured, no intact 2 in., diameter pieces. Jointing indiscernible, most surfaces discolored, some with iron staining.
6, 5, 5, 6	C2	10.0 13.5	36 / 6	86 / 14	Slight to Moderate		Similar to above except slightly to moderately weathered. Primary joint set parallel with bedding, very close to moderately spaced, rough to slightly smoothed, planar to slightly undulating, discolored, tight to open. Possible secondary joint set dipping at high to near vertical angles, smooth, discolored with quartz in filling. -KITTERY FORMATION-
7, 6, 7	C3	13.5 16.5	36 / 4	100 / 11	Slight to Moderate		Moderately hard to near hard, slightly to moderately weathered, light to dark gray, fine grained to aphanitic PHYLLITE. Weakly foliated dipping at moderate to high angles. Occasionally visible bedding, dipping parallel to foliation. Primary joint set indiscernible due to high fracturing. Joints very close to closely spaced, rough to occasionally smooth planar, fresh to discolored, tight.
6	C4	16.5 18.5	24 / 0	100 / 0	Slight to Moderate		Similar to above.
						55.0 18.5	BOTTOM OF EXPLORATION 18.5 FT

HALEY ALDRICH — TEST BORING REPORT — Boring No. WB-05

Project: PNSY-LIFTING AND HANDLING IMPROVEMENTS DRY DOCK I, KITTERY, ME
Client: FAY, SPOFFORD AND THORNDIKE, INC.
Contractor: NEW ENGLAND BORING CONTRACTORS, INC.

File No. 41242-000
Sheet No. 1 of 1
Start: December 2, 2014
Finish: December 2, 2014
Driller: S. Cooley
H&A Rep.: M. Dodson
Elevation: 59.5 (est.)
Datum: PNSY
Location: See Plan

	Casing	Sampler	Barrel
Type	HW	S	--
Inside Diameter (in.)	4.0	1.375	--
Hammer Weight (lb)	300	140	-
Hammer Fall (in.)	24	30	-

Drilling Equipment and Procedures: Rig Make & Model: Diedrich D-45 Skid; Bit Type: Roller Bit; Drill Mud: None; Casing: HW would not advance; Hoist/Hammer: Cat-Head Safety Hammer; PID Make & Model: MiniRAE 3000

Depth (ft)	Sampler Blows per 6 in.	Sample No. & Rec. (in.)	Sample Depth (ft)	USCS Symbol	Stratum Change Elev/Depth (ft)	Visual-Manual Identification and Description	% Coarse Gravel	% Fine Gravel	% Coarse Sand	% Medium Sand	% Fine Sand	% Fines	Dilatancy	Toughness	Plasticity	Strength
0	WOR WOR 15 100/5"	S1 20 S1A	0.0 1.9 0.1	SM		Very soft black to dark gray silty SAND with gravel (SM), no structure, slight H_2S odor, wet, trace shell specks and wood fragments PID = ND ppm -RIVER BOTTOM DEPOSITS-	20	12	6	9	23	30	R			
				GW-GM	57.9 1.6 / 57.6 1.9	Very dense brown to dark gray will graded GRAVEL with silt and sand (GW-GM), mps 1.3 in., no visible structure, slight H_2S odor, wet PID = ND ppm -GLACIOFLUVIAL DEPOSITS- Note: Casing refusal at 1.9 ft. casing pushing to south TOP OF PROBABLE BEDROCK 1.9 FT Note: Unable to seat casing in bedrock due to angle of surface and lack of soil holding casing in place. Note: Other attempts to seat casing were unsuccessful.	30	30	10	10	10	10				

Water Level Data: NOT OBSERVED

Summary: Overburden (ft) 1.9; Rock Cored (ft) -; Samples 1S
Boring No. WB-05

Field Tests: Dilatancy: R - Rapid S - Slow N - None; Toughness: L - Low M - Medium H - High; Plasticity: N - Nonplastic L - Low M - Medium H - High; Dry Strength: N - None L - Low M - Medium H - High V - Very High

†Note: Maximum particle size is determined by direct observation within the limitations of sampler size.
Note: Soil identification based on visual-manual methods of the USCS as practiced by Haley & Aldrich, Inc.

HALEY ALDRICH — TEST BORING REPORT — Boring No. WB-06

Project: PNSY-LIFTING AND HANDLING IMPROVEMENTS DRY DOCK I, KITTERY, ME
Client: FAY, SPOFFORD AND THORNDIKE, INC.
Contractor: NEW ENGLAND BORING CONTRACTORS, INC.

File No. 41242-000
Sheet No. 1 of 2
Start: December 3, 2014
Finish: December 4, 2014
Driller: S. Cooley
H&A Rep.: M. Dodson
Elevation: 57.5 (est.)
Datum: PNSY
Location: See Plan

	Casing	Sampler	Barrel
Type	HW	S	NX
Inside Diameter (in.)	4	1.375	2.0
Hammer Weight (lb)	300	140	-
Hammer Fall (in.)	24	30	-

Drilling Equipment and Procedures: Rig Make & Model: Diedrich D-45 Skid; Bit Type: Roller Bit; Drill Mud: None; Casing: HW Driven to 13 ft.; Hoist/Hammer: Cat-Head Safety Hammer; PID Make & Model: MiniRAE 3000

Depth (ft)	Sampler Blows per 6 in.	Sample No. & Rec. (in.)	Sample Depth (ft)	USCS Symbol	Stratum Change Elev/Depth (ft)	Visual-Manual Identification and Description	% Coarse Gravel	% Fine Gravel	% Coarse Sand	% Medium Sand	% Fine Sand	% Fines	Dilatancy	Toughness	Plasticity	Strength
0	2 5 11 17	S1 16	0.0 2.0	SP-SM		Very stiff hard black to olive brown poorly graded SAND with silt and gravel (SP-SM), interbedded with poorly graded to well graded SAND with gravel (SP/SW), mps 1.2 in., slight H_2S odor, wet, trace shell specks/particles. PID = ND ppm	24	9	9	20	28	10	R			
	8 9 22 14	S2 14	2.0 4.0	SP	55.0 2.5	-RIVER BOTTOM DEPOSITS- Dense gray brown poorly graded SAND (SP), mps 1.3 in., becoming more coarse with depth by 3.5 ft., no odor, wet, trace shell particles/speckles, occasional layers with (organic) silt PID = ND ppm	5	10	55	20	5					
5	21 11 16 17	S3 6	4.0 6.0	SW	53.5 4.0	-MARINE SAND- Medium dense gray brown well graded SAND with gravel (SW), mps 1.0 in., no structure, no odor, wet PID = ND ppm	10	20	20	25	20	5				
					50.5 7.0	Note: Drill action indicates less gravel below 7.0 ft. -GLACIOFLUVIAL DEPOSITS-										
10	10 98	S4 8	9.0 10.0	SP		Very dense yellow brown poorly graded SAND with gravel (SP), mps 1.0 in., no visible structure, no odor, wet PID = ND ppm Note: Blown in sand in spoon recovery. Note: Advanced roller bit to 10.5 ft. and cored from 10.5 to 11.5 ft. Recovery in core included 4 in. of stones of various lithologies with rounded edges. Note: Advanced roller bit to 13.0 ft cored through boulder from 13.0 to 13.7 ft. as part of core run C1.	13	6	9	16	52	4				
					43.8 13.7	TOP OF BEDROCK 13.7 FT SEE CORE BORING REPORT FOR ROCK DETAILS										

Water Level Data:

Date	Time	Elapsed Time (hr.)	Depth (ft) to: Bottom of Casing	Bottom of Hole	Water
12/4/2014	12:45	0.25	13.0	23.0	WATER AT LEVEL OF RIVER

Summary: Overburden (ft) 13.0; Rock Cored (ft) 9.3; Samples 4S, 2C
Boring No. WB-06

Field Tests: Dilatancy: R - Rapid S - Slow N - None; Toughness: L - Low M - Medium H - High; Plasticity: N - Nonplastic L - Low M - Medium H - High; Dry Strength: N - None L - Low M - Medium H - High V - Very High

†Note: Maximum particle size is determined by direct observation within the limitations of sampler size.
Note: Soil identification based on visual-manual methods of the USCS as practiced by Haley & Aldrich, Inc.

HALEY ALDRICH — CORE BORING REPORT — Boring No. WB-06

File No. 41242-000
Sheet No. 2 of 2

SEE TEST BORING REPORT FOR OVERBURDEN DETAILS

Drilling Rate (min./ft)	Run No.	Run Depth (ft)	Recovery in.	RQD %	Weathering	Elev./Depth (ft)	Visual Description and Remarks
6, 7, 6, 7	C1	13.7 18.0	51.6 / 21	100 / 41	Slight to Fresh	43.8 13.7	Hard, fresh to slightly weathered, light to dark gray, fine grained to aphanitic PHYLLITE. Occasional bedding/foliation moderately dipping to near horizontal. Primary joint set low angle to horizontal, close to moderately spaced, rough to smooth, planar, fresh to discolored, tight. -KITTERY FORMATION-
7, 6, 7, 8, 8	C2	18.0 23.0	60 / 32	100 / 53	Fresh to Slight		Similar to above except primary joint set moderate to high dipping angle, close to moderately spaced, rough to smooth, planar, fresh to discolored, tight.
						34.5 23.0	BOTTOM OF EXPLORATION 23.0 FT

NOTES:

1. FOR BORING LOCATION PLAN SEE B-101.
2. ELEVATIONS SHOWN ON THIS SHEET ARE BASED ON PNSY DATUM – SEE V-101 FOR CONVERSION INFORMATION.

GRAPHIC SCALE

CHECK GRAPHIC SCALE BEFORE USING

SYM	DESCRIPTION	DATE	APPR

NAVFAC

SEAL: COMMONWEALTH OF MASSACHUSETTS MARC NICOLAZZO CIVIL No. 51724 REGISTERED PROFESSIONAL ENGINEER

MN FST A JOINT VENTURE
A/E INFO

APPROVED David Greenfield
FOR COMMANDER NAVFAC

ACTIVITY: PER DOCUMENT FROM PNSY CODE 980, KITTERY ME
SATISFACTORY TO DATE: 05/09/16

DES MN | DRW CK | CHK MN
PM/DM: NATHAN LIBBY
BRANCH MANAGER: NATHAN MAHER
FEAD/PM&E: AMIN BAHROUR
FIRE PROTECTION: N/A

DEPARTMENT OF THE NAVY
NAVAL FACILITIES ENGINEERING COMMAND
NAVAL FACILITIES ENGINEERING COMMAND ~ MID-ATLANTIC
PUBLIC WORKS DEPARTMENT – MAINE
NAVAL SHIPYARD – PORTSMOUTH, NH
PORTSMOUTH NAVAL SHIPYARD
KITTERY, MAINE

STRUCTURAL REPAIRS AT BERTHS 11A, 11B AND 11C

BORING LOGS – SHEET 9 OF 17

EPROJECT NO.: 1356489
CONSTR. CONTR. NO. N40085-XX-C-XXXX
NAVFAC DRAWING NO. 12716030
SHEET 34 OF 144
B-609 FP2-16-670

DRAWFORM REVISION: 10 OCTOBER 2014

FILE NAME: S:\1794\Active\179410203\r\TP-104A PNSY Lifting Study\TP-104A PNSY Lifting Study\02 CADD\04 Geotechnical\FP2-16-670.dwg LAYOUT NAME: BORING LOGS – SHEET 9 OF 17 PLOTTED: Friday, May 13, 2016 – 2:31pm USER: cgoodridge

TEST BORING LOG: 5W-98

Project: Berth 11 — Approximate Surface Elevation: -34.0' MLLW
Location: Portsmouth Naval Shipyard, Kittery, Maine — Ground Water Depth: Tidal
Client: Appledore Engineering, Inc. — Date: 07-31-98

Project No. 349-09 — Sheet No. 12 of 13

DEPTH, FT.	SYMBOL	SAMPLES	SAMPLE #	DESCRIPTION OF MATERIAL	SAMPLE RECOVERY, IN.	BLOWS PER 6"	SPT-N BLOWS PER FT.	MOISTURE CONTENT, %	LAB TESTS
0			S-1	SILT and ORGANICS, loose, wet, silt, some organics and shells, trace sand and gravel, black.	2	1/ 36"	1		
5			S-2	SAND (SP); medium dense, wet, coarse to fine sand, mostly coarse to medium, little to trace fine gravel, brown.	1/2	28 10 10	20		
			S-3		16	21 16 20 26 30	46		
10				GRAVELLY SILTY SAND (SM); dense, moist, coarse to fine sand, some gravel, little silt, brown, (GLACIAL TILL).					
15				Top of Bedrock at 9.0', began NX rock core at 9.0'. R-1 (9.0' to 13.0'), fresh, hard, light gray, fine grained, QUARTZITE, with frequent calcite stringers, primary joints are moderately dipping, close, undulating to planar, smooth, discolored and closed, silty infilling of joint at 14.0'. Also: from 9.7' to 10.0' fresh, hard, light gray, porphyritic, diorite intrusion. Rec= 90% RQD= 22% Depth (ft) Time (min) 9.0 to 10.0 6-7 10.0 to 11.0 6-7 11.0 to 12.0 6-7 12.0 to 13.0 6-7 R-2 (13.0' to 18.0'), same as R-1 except calcite stringers less frequent. Rec= 80% RQD= 25% 13.0 to 14.0 6-7 14.0 to 15.0 6-7 15.0 to 16.0 6-7 16.0 to 17.0 6-7 17.0 to 18.0 6-7 R-3 (18.0' to 23.0'), same as R-1 except primary joints are healed with secondary calcite mineralization. Rec= 100% RQD= 30% 18.0 to 19.0 6-7 19.0 to 20.0 6-7 20.0 to 21.0 6-7 21.0 to 22.0 6-7 22.0 to 23.0 6-7					
20									
25									
30				Bottom of Exploration at 23.0', terminated in bedrock.					

R.W. Gillespie & Associates, Inc.
Saco, Maine

TEST BORING LOG: 6W-98

Project: Berth 11 — Approximate Surface Elevation: -32.0' MLLW
Location: Portsmouth Naval Shipyard, Kittery, Maine — Ground Water Depth: Tidal
Client: Appledore Engineering, Inc. — Date: 07-31-98

Project No. 349-09 — Sheet No. 13 of 13

DEPTH, FT.	SYMBOL	SAMPLES	SAMPLE #	DESCRIPTION OF MATERIAL	SAMPLE RECOVERY, IN.	BLOWS PER 6"	SPT-N BLOWS PER FT.	MOISTURE CONTENT, %	LAB TESTS
0			S-1	GRAVELLY SILTY SAND (SM); dense, wet, coarse to fine sand, mostly medium.	4	40 100/ 1"	140+		
5			S-2	Cored through 1.5' boulder from 5.5' to 7.0'.	NR	184	184+		
			S-3		6	18 25/ 1"	43+		
10				Top of Bedrock at 7.5', began NX rock core at 8.0'. R-1 (8.0' to 10.0'), slightly weathered, hard, light gray, fine grained, QUARTZITE, with moderately dipping, close, smooth, undulating, discolored, closed joints. Rec= 100% RQD= 16% Depth (ft) Time (min) 8.0 to 9.0 7 9.0 to 10.0 7 R-2 (10.0' to 13.0'), same as R-1 except trace calcite stringers and infrequent healed joints cemented with calcite. Rec= 100% RQD= 18% 10.0 to 11.0 7 11.0 to 12.0 6 12.0 to 13.0 6 R-3 (13.0' to 14.0'), same as R-1. Rec= 67% RQD= 0% 13.0 to 14.0 7 R-4 (14.0' to 16.5'), same as R-2. Rec= 100% RQD= 33% 14.0 to 15.0 7.5 15.0 to 16.0 6 16.0 to 16.5 4 R-5 (16.5' to 18.0'), same as R-1 except small (1/16") solution cavities along healed joints. Rec= 100% RQD= 0% 16.5 to 17.0 3 17.0 to 18.0 7					
15									
20									
25									
30				Bottom of Exploration at 18.0', terminated in bedrock.					

R.W. Gillespie & Associates, Inc.
Saco, Maine

TEST BORING LOG: 1B-98

Project: Berth 11 — Approximate Surface Elevation: 14.5' +/- MLLW
Location: Portsmouth Naval Shipyard, Kittery, Maine — Ground Water Depth: Tidal
Client: Appledore Engineering, Inc. — Date: 08-13-98

Project No. 349-09 — Sheet No. 1 of 2

DEPTH, FT.	SYMBOL	SAMPLES	SAMPLE #	DESCRIPTION OF MATERIAL	SAMPLE RECOVERY, IN.	BLOWS PER 6"	SPT-N BLOWS PER FT.	MOISTURE CONTENT, %	LAB TESTS
0				Spun casing and advanced roller bit to 45.0' without sampling. Refer to log of boring 1A-98 for soil descriptions.					
5									
10									
15									
20									
25									
30									

R.W. Gillespie & Associates, Inc.
Saco, Maine

TEST BORING LOG: 1B-98

Project: Berth 11 — Approximate Surface Elevation: 14.5' +/- MLLW
Location: Portsmouth Naval Shipyard, Kittery, Maine — Ground Water Depth: Tidal
Client: Appledore Engineering, Inc. — Date: 08-13-98

Project No. 349-09 — Sheet No. 2 of 2

DEPTH, FT.	SYMBOL	SAMPLES	SAMPLE #	DESCRIPTION OF MATERIAL	SAMPLE RECOVERY, IN.	BLOWS PER 6"	SPT-N BLOWS PER FT.	MOISTURE CONTENT, %	LAB TESTS
35									
40				Advanced roller bit through 3.5' boulder from 39.5' to 43.0', then and additional 2.0' in soil (remnants of gray silty fine sand on roller bit).					
45			S-1	Top of Bedrock at 45.0', advanced roller bit from 45.0' to 48.6', through fractured, weathered rock, began NX rock core at 48.6'. R-1 (48.6' to 52.1'), slightly weathered, hard, gray, fine-grained, DIORITE. Primary joints are near vertical, rough and undulating, open with moderately weathered, rusty-colored calcite infilling. Secondary joints are closely spaced, dip at low angles, rough and undulating. Rec= 100% RQD= 26% Depth (ft) Time (min) 48.6 to 49.6 7 49.6 to 50.6 8 50.6 to 51.6 5 51.6 to 52.1 5	NR	40/ 0"			
50			S-2	R-2 (52.1' to 57.1'), same as R-1 except fresh. Rec= 100% RQD= 30% 52.1 to 53.1 6 53.1 to 54.1 4 54.1 to 55.1 2 55.1 to 56.1 3 56.1 to 57.1 2	NR	40/ 1"			
55				R-3 (57.1' to 62.1'), same as R-2, except primary joints close to moderately spaced, moderately dipping, undulating and stepped, with fresh calcite infilling below 61.0'. Rec= 90% RQD= 82% 57.1 to 58.1 5 58.1 to 59.1 4 59.1 to 60.1 5 60.1 to 61.1 5 61.1 to 62.1 5					
60									
65				R-4 (62.1' to 65.1'), same as R-3, with fresh calcite infilling. Rec= 83% RQD= 61% 62.1 to 63.1 5 63.1 to 64.1 4 64.1 to 65.1 4					
				Bottom of Exploration at 65.1', terminated in bedrock.					

R.W. Gillespie & Associates, Inc.
Saco, Maine

Table 1: Sample Composite Intervals and Field Observations

Date	Sample ID	Composite Interval	Observations
12/11/14	SC-01-S1	0-2 feet	Black sandy organic soil with gravel.
12/11/14	SC-01-S2	2-8 feet	Olive gray to gray-light brown, mostly lean clay.
12/8/14	SC-02-01	0-8 feet	Black organic soil with sand.
1/21/15	SC-03-S1	0-4 feet	Black organic silty sand with gravel.
1/21/15	SC-03-S2	4-7.2 feet	Black poorly graded sand with organic silt.
11/26/14	SC-04-1	0-3 feet	Soft black sandy organic soil.
11/26/14	SC-04-2	3-4.5 feet	Loose black organic silty sand.
12/5/14	SC-05-S1	0-3.5 feet	Black organic soil with sand/black silty sand with gravel.
12/3/14	SC-06-S1	0-2.5 feet	Hard black to olive brown sandy organic soil.
12/3/14	SC-06-S2	2.5-6 feet	Medium dense gray brown sand.
12/2/14	SC-07-S1	0-1.6 feet	Black sandy organic soil.
8/12/15	SC-08	0-3 feet	Black silty sand with trace medium coarse sand, trace shells and trace fine sand.
8/12/15	SC-09	0-5 feet	Black silty sand with trace shells and trace medium sand.
8/12/15	SC-10-S1	0-4 feet	Black silty sand with trace wood, trace medium sand and trace fine gravel. Has decomposing organic odor.
8/12/15	SC-11	0-4 feet	Black silty sand with trace concrete, trace fine gravel, trace glass and trace wood.

Excerpt from:
Final Sediment Analysis Report
Portsmouth Naval Shipyard - Dry Dock #1 Lifting and Handling Improvements Study

PREPARED FOR:
MN-FST Joint Venture
800 World Trade Center
Norfolk, Virginia 23510

PREPARED BY:
ESS Group, Inc.
100 Fifth Avenue, 5th Floor
Waltham, Massachusetts 02451

ESS Project No. N492-000

November 16, 2015

NOTES:

1. FOR BORING LOCATION PLAN SEE B–101.
2. ELEVATIONS SHOWN ON THIS SHEET ARE BASED ON PNSY DATUM – SEE V–101 FOR CONVERSION INFORMATION.

GRAPHIC SCALE

CHECK GRAPHIC SCALE BEFORE USING

APPR | DATE | DESCRIPTION | SYM

NAVFAC

SEAL

MN FST A JOINT VENTURE
A/E INFO

APPROVED
David W. Grunfeld
FOR COMMANDER NAVFAC

ACTIVITY:
PER DOCUMENT FROM PNSY
CODE 980, KITTERY ME

SATISFACTORY TO DATE: 05/09/16

DES MN | DRW CK | CHK MN

PM/DM: NATHAN LIBBY

BRANCH MANAGER: NATHAN MAHER

FEAD/PM&E: AMIN BAHROUR

FIRE PROTECTION: N/A

DEPARTMENT OF THE NAVY
NAVAL FACILITIES ENGINEERING COMMAND
PUBLIC WORKS DEPARTMENT – MAINE
PORTSMOUTH NAVAL SHIPYARD

NAVAL FACILITIES ENGINEERING COMMAND – MID-ATLANTIC
NAVAL SHIPYARD – PORTSMOUTH, NH

KITTERY, MAINE

STRUCTURAL REPAIRS
AT BERTHS 11A, 11B AND 11C

BORING LOGS – SHEET 10 OF 17

EPROJECT NO.: 1356489

CONSTR. CONTR. NO.
N40085–XX–C–XXXX

NAVFAC DRAWING NO.
12716031

SHEET 35 OF 144

B-610 | FP2-16-671

DRAWFORM REVISION: 10 OCTOBER 2014

FILE NAME: S:\1794\Active\179410203\V\TP–104A PNSY Lifting Study\TP–104A PNSY Lifting Study\02 CAD\04 Geotechnical\FP2–16–671.dwg LAYOUT NAME: BORING LOGS – SHEET 10 OF 17
PLOTTED: Friday, May 13, 2016 – 2:31pm USER: cgoodridge

REVISIONS

LTR	DESCRIPTION	PREP'D BY	DATE	APPROVED

SYM	DESCRIPTION	DATE	APPR

BORING NO. 73-1

GROUND SURFACE ELEV. 106.4

Depths: 0.0', 0.5', 2.0', 5.0', 6.5', 8.0', W 9.5', 12.5', 13.0', 14.5', 20.0', 21.5', 24.5', 25.0', 26.5', 28.0', 30.0', 31.5', 35.0', 36.5', 40.0', 41.5', 44.5', 45.0', 46.5', 49.0', 50.0', 51.0', 56.0'

Depth	Description
0.0'–0.5'	BLACKTOP
0.5'–8.0'	SAND, GRAVEL & SILT - FILL -
8.0'–12.5'	CORED ROCK - FILL -
12.5'–20.0'	SOFT SANDY YELLOW-GRAY CLAY TRACE OF FINE GRAVEL - FILL -
20.0'–24.5'	STIFF YELLOW CLAY & FIBROUS PEAT TRACE FINE SAND
24.5'–28.0'	BOULDER
28.0'–35.0'	FINE TO MEDIUM SAND LITTLE FINE TO COARSE GRAVEL LITTLE SILT
35.0'–44.5'	FINE TO COARSE SAND SOME FINE TO MEDIUM GRAVEL
44.5'–49.0'	FINE SAND
49.0'–51.0'	SEE NOTE 1
51.0'–56.0'	CORED ROCK RUN NO. 1 RECOVERY 60" 100%

Samples: 12-10-10, 8-8-10, C, 2-1-2, 3-6-5, 39-66-140, 18-28-24, 7-14-16 N.R., 24-36-36, 14-16-16, 48-44, C

MIN/FT.: 3 3, 4 5, 5

BOTTOM OF BORING: 56.0'
WATER: 9.5'
STARTED: 1/3/74
FINISHED: 1/4/74
NOTE 1 - FINE TO MEDIUM SILTY SAND LITTLE FINE TO COARSE GRAVEL TRACE OF CLAY - TILLISH -
NOTE: DRILLED NW CASING TO 12.0'

BORING NO. 73-2

GROUND SURFACE ELEV. 106.4

Depths: 0.0', 0.5', 2.0', 5.0', 6.5', 10.0', W 12.0', 17.5', 20.0', 22.0', 25.0', 26.5', 30.0', 31.5', 35.0', 36.5', 39.0', 40.0', 41.5', 45.0', 46.5', 49.0', 50.0', 51.5', 53.3', 63.3'

Depth	Description
0.0'–0.5'	BLACKTOP
0.5'–10.0'	SAND, GRAVEL BROKEN ROCK - FILL -
10.0'–17.5'	CORED BROKEN ROCK - FILL -
17.5'–25.0'	FINE TO COARSE SAND SOME FINE TO COARSE GRAVEL - POSSIBLE FILL -
25.0'–35.0'	MEDIUM YELLOW CLAY & FINE TO MEDIUM SAND TRACE FINE GRAVEL
35.0'–39.0'	MEDIUM GRAY CLAY & FINE TO MEDIUM SAND TRACE OF FINE GRAVEL
39.0'–49.0'	FINE TO MEDIUM SILTY SAND SOME FINE GRAVEL LITTLE CLAY
49.0'–53.3'	FINE TO COARSE SAND SOME FINE GRAVEL
53.3'–63.3'	CORED ROCK RUN NO. 1 RECOVERY 84" 70%

Samples: 12-12-10, 28-10-12, C, 1-1-1-2, 5-5-6, 1-3-3, 3-3-4, 27-23-25, 7-17-27, 6-7-8, C

BOTTOM OF BORING: 63.3'
WATER: 12.0'
STARTED: 12/18/73
FINISHED: 12/20/73
NOTE: BORING FOREMAN NOTES WATER READING MAY BE AFFECTED BY TIDE.
NOTE: DRILLED IN 9.0' OF NW CASING AND 17.5' OF BW CASING.

BORING NO. 73-3

GROUND SURFACE ELEV. 106.5

Depths: 0.0', 0.5', 2.0', 5.0', 6.5', 10.0', W 11.0', 11.5', 14.0', 15.0', 16.5', 17.0', 20.0', 21.5', 23.0', 25.0', 26.5', 29.5', 30.0', 31.5', 34.0', 35.0', 36.5', 40.0', 41.5', 43.0', 45.0', 46.5', 49.5', 50.0', 51.5', 54.0', 55.0', 56.0', 61.0', 66.0'

Depth	Description
0.0'–0.5'	BLACKTOP
0.5'–14.0'	SAND, GRAVEL & SILT - FILL -
14.0'–17.0'	MEDIUM SANDY YELLOW-GRAY CLAY TRACE OF FINE GRAVEL
17.0'–23.0'	FINE TO COARSE SAND SOME SILT LITTLE FINE GRAVEL
23.0'–29.5'	FINE TO COARSE SAND SOME FINE TO MEDIUM GRAVEL TRACE OF SILT
29.5'–34.0'	FINE SILTY SAND SOME FINE GRAVEL TRACE OF CLAY
34.0'–40.0'	FINE SAND LITTLE SILT TRACE OF CLAY
40.0'–43.0'	FINE SAND LITTLE SILT
43.0'–49.5'	FINE TO COARSE SAND SOME FINE TO COARSE GRAVEL LITTLE SILT
49.5'–54.0'	FINE SAND LITTLE SILT
54.0'–56.0'	SEE NOTE 1
56.0'–61.0'	CORED ROCK RUN NO. 1 RECOVERY 40" 67%
61.0'–66.0'	CORED ROCK RUN NO. 2 RECOVERY 56" 93%

Samples: 20-36-34, 110-32-8, 36-24-6, 1-2-3, 15-10-17, 22-34-33, 25-55-65, 14-23-14, 14-17-24, 17-19-24, 12-26-28, 22-24, C, C

MIN/FT.: 3 4, 4 5, 5 4, 4 5, 5 6

BOTTOM OF BORING: 66.0'
WATER: 11.0
STARTED: 12/28/73
FINISHED: 1/3/74
NOTE 1 - FINE TO MEDIUM SAND SOME FINE GRAVEL SOME SILT.
NOTE: BORING FOREMAN NOTES WATER READING MAY BE AFFECTED BY TIDE.

BORING NO. 73-4

GROUND SURFACE ELEV. 106.5

Depths: 0.0', 0.5', 2.0', 3.5', 7.0', 8.5', W 10.5', 15.0', 16.5', 19.0', 20.0', 21.5', 24.5', 25.0', 26.5', 30.0', 31.5', 34.5', 35.0', 36.5', 40.0', 41.5', 43.0', 45.0', 46.5', 48.0', 50.0', 51.5', 54.3', 59.3'

Depth	Description
0.0'–0.5'	BLACKTOP
0.5'–3.5'	SAND, GRAVEL SILT & CLAY - FILL -
3.5'–7.0'	CORED BOULDER
7.0'–19.0'	SAND, GRAVEL SILT & CLAY - FILL -
19.0'–24.5'	FINE TO COARSE SILTY SAND & LITTLE FINE GRAVEL - DISCOLORED -
24.5'–34.5'	FINE TO COARSE SILTY SAND TRACE OF FINE GRAVEL
34.5'–43.0'	FINE SILTY SAND
43.0'–48.0'	FINE TO COARSE SILTY SAND & LITTLE FINE TO MEDIUM GRAVEL
48.0'–54.3'	FINE SAND
54.3'–59.3'	CORED ROCK RUN NO. 1 RECOVERY 54" 90%

Samples: 29-34-39, C, 5-8-8, 36-26-25, 5-5-13, 38-28-25, 24-28-22, 17-28-30, 19-27-26, 24-40-33, 15-37-40, C

BOTTOM OF BORING: 59.3'
WATER: 10.5'
STARTED: 12/26/73
FINISHED: 12/28/73
NOTE: BORING FOREMAN NOTES WATER READINGS MAY BE AFFECTED BY TIDE.
NOTE: DRILLED NW CASING TO 9.0'

BORING NO. 73-5

GROUND SURFACE ELEV. 106.4

Depths: 0.0', W 9.5', 15.5', 16.5', 17.0', 19.0', 20.5', 23.0', 25.0', 26.5', 29.5', 30.0', 31.5', 33.5', 35.0', 36.5', 40.0', 41.5', 44.0', 45.5'

Depth	Description
0.0'–15.5'	CORED ROCK - FILL -
15.5'–16.5'	ROCK - FILL -
16.5'–23.0'	FINE TO MEDIUM SAND SOME SILT LITTLE FINE GRAVEL -DISCOLORED-
23.0'–29.5'	FINE TO MEDIUM SILTY SAND SOME FINE GRAVEL SOME CLAY
29.5'–33.5'	FINE TO COARSE SAND SOME FINE TO COARSE GRAVEL
33.5'–45.5'	FINE TO COARSE SAND LITTLE SILT TRACE OF FINE TO MEDIUM GRAVEL; SEE NOTE 1

Samples: C, 56-13-3*, 7-2-1, 10-9-14, 13-13-56, 7-7-7 N.R., 10-16-13, 36-63-89

REFUSAL AT 45.5'
WATER: 9.5'
STARTED: 12/21/73
FINISHED: 12/26/73
NOTE 1 - FINE TO COARSE SAND SOME FINE TO COARSE GRAVEL LITTLE SILT.
*DENOTES USE OF 300 LB. WEIGHT ON SAMPLER.
NOTE: DRILLED NW CASING TO 16.5'

BORING NO. 73-9

GROUND SURFACE ELEV. 106.5

Depths: 0.0', 0.5', 2.0', 5.0', 6.5', 7.0', 10.0', 11.5', W 15.0', 16.0', 16.5', 20.0', 21.5', 22.0', 25.0', 26.5', 27.0', 30.0', 31.5', 35.0', 36.5', 40.0', 41.5', 45.0', 46.5', 50.0', 55.0', 60.0'

Depth	Description
0.0'–0.5'	SEE NOTE 1
0.5'–7.0'	SAND, GRAVEL SILT, CLAY & BRICK - FILL -
7.0'–16.0'	SAND, CLAY & SILT - FILL -
16.0'–22.0'	VERY STIFF SILTY GRAY CLAY WITH FINE SAND LENSES TRACE FINE GRAVEL
22.0'–27.0'	MEDIUM GRAY CLAY WITH FINE SAND LENSES - DISCOLORED -
27.0'–41.5'	MEDIUM TO SOFT GRAY CLAY
41.5'–50.0'	FINE TO MEDIUM SILTY SAND SOME FINE TO COARSE GRAVEL LITTLE CLAY ROCK FRAGMENTS
50.0'–55.0'	CORED ROCK RUN NO. 1 RECOVERY 32" 53%
55.0'–60.0'	CORED ROCK RUN NO. 2 RECOVERY 60" 100%

Samples: 38-42-31, 14-17-10, 1-1-2, 4-7-12, 12-12-11, 5-5-4, 3-4-4, 1-1-1, 2-2-5, 64-58-71, C, C

MIN/FT.: 5 6, 6 7, 6, 7, 8 7, 6 8

BOTTOM OF BORING: 60.0'
WATER: 16.0'
STARTED: 1/10/74
FINISHED: 1/14/74
NOTE 1 - DRILLED BW CASING 6" THRU - FILL - DUE TO FROST.

BORING NO. 73-10

GROUND SURFACE ELEV. 106.2

Depths: 0.0', 0.4', 0.5', 2.0', 5.0', 6.5', 10.0', 11.5', W 13.0', 14.0', 15.0', 16.5', 20.0', 21.5', 24.0', 25.0', 26.5', 29.0', 30.0', 31.5', 33.0', 35.0', 36.5', 40.0', 41.5', 42.0', 45.0', 46.5', 48.0', 50.0', 51.5', 53.0', 58.0'

Depth	Description
0.0'–0.4'	BLACKTOP
0.4'–5.0'	SAND, GRAVEL, SILT, CLAY & WOOD - FILL -
5.0'–6.5'	SEE NOTE 1
6.5'–13.0'	FINE TO COARSE SAND & CLAY SOME FINE TO MEDIUM GRAVEL
13.0'–24.0'	FINE TO MEDIUM SAND & CLAY LITTLE FINE GRAVEL
24.0'–29.0'	VERY STIFF YELLOW-GRAY MOTTLED CLAY
29.0'–33.0'	STIFF GRAY CLAY
33.0'–42.0'	SOFT GRAY CLAY
42.0'–48.0'	FINE SAND, TRACE OF SILT - RUNNING SAND -
48.0'–53.0'	FINE TO COARSE SAND & GRAVEL TRACE OF SILT ROCK OR BOULDER FRAGMENTS - TILL -
53.0'–58.0'	CORED ROCK RUN NO. 1 RECOVERY 30" 50%

Samples: 31-47-56, 14-14-13, 7-9-9, P-1-2, 5-5-4, 10-9-7, 4-7-6, P-1-1, 2-2-3, 17-28-33, 64-68-55, C

MIN/FT.: 6 5, 5 5, 6

BOTTOM OF BORING: 58.0'
WATER: 14.0'
STARTED: 1/9/74
FINISHED: 1/10/74
NOTE 1 - FINE TO COARSE SAND, SOME SILT, TRACE OF CLAY - POSSIBLE FILL -
NOTE: DRILLED NW CASING TO 6.0' FROST TOP 6".

BORING NO. 73-11

GROUND SURFACE ELEV. 106.1

Depths: 0.0', 0.5', 2.0', 5.0', W 6.0', 6.5', 10.0', 11.5', 15.0', 16.5', 17.0'

Depth	Description
0.0'–0.5'	- FILL - FROST
0.5'–17.0'	SAND, GRAVEL & COBBLES - FILL -

Samples: 14-10-17, 24-17-10, 61-57-29 ✳, 49-27-28

BOTTOM OF BORING: 17.0'
WATER: 6.0'
STARTED AND FINISHED: 1/17/74
NOTE: BROKE CASING AT 17.0' MOVED 3.0' AND CONDUCTED BORING NO. 73-11A.
✳ PUSHED COBBLE

BORING NO. 73-12

GROUND SURFACE ELEV. 105.1

Depths: 0.0', 0.5', 2.0', 5.0', W 6.0', 6.5', 10.0', 14.0', 15.0', 16.5', 17.0', 20.0', 21.5', 22.5', 25.0', 26.5', 30.0', 31.5', 35.0', 36.5', 40.0', 41.5', 45.0', 46.5', 50.0', 51.5', 52.0', 55.0', 56.5', 57.0'

Depth	Description
0.0'–0.5'	SEE NOTE 1
0.5'–10.0'	SAND, GRAVEL SILT & BRICK - FILL -
10.0'–14.0'	WOOD
14.0'–17.0'	CLAY, SAND GRAVEL & SILT - FILL -
17.0'–22.5'	SOFT ORGANIC SILTY, SANDY CLAY TRACE OF SHELLS
22.5'–31.5'	VERY STIFF YELLOW-GRAY CLAY
31.5'–52.0'	SOFT GRAY CLAY WITH FINE SAND LENSES
52.0'–57.0'	VERY STIFF GRAY CLAY WITH FINE SAND LENSES

Samples: 39-41-22, 41-13-10, 5-6-5, 1-2-2, 13-12-14, 15-14-14, 1-1-1, 1-2-1, 1-2-1, 1-1-1, 9-10-10

BORING NO. 73-12 (CONTINUED)

Depths: 57.0', 60.0', 61.5', 65.0', 66.5', 70.0', 71.0', 76.0', 79.0', 81.0'

Depth	Description
57.0'–71.0'	FINE SILTY SAND TRACE OF FINE TO MEDIUM GRAVEL
71.0'–76.0'	CORED ROCK RUN NO. 1 RECOVERY 39" 65%
76.0'–79.0'	CORED ROCK RUN 2 REC. 6" 10%
79.0'–81.0'	CORED ROCK RUN 3 REC. 7" 12%

Samples: 28-30-27, 19-22-18, 126, C, C, C

MIN/FT.: 6 7, 7 5, 5 7, 7 6, 8 10

BOTTOM OF BORING: 81.0'
WATER: 6.0'
STARTED: 1/14/74
FINISHED: 1/16/74
NOTE 1 - DRILLED BW CASING 6" THRU BLACKTOP AND FILL, DUE TO FROST.
NOTE: DRILLED THRU WOOD FROM 10.0' TO 14.0'.

NOTE:
1. FOR BORING NOTES AND LEGEND, SEE NAVFAC DRAWING NO. 2025066
2. FOR BORING LOCATION SEE NAVFAC DRAWING NO. 2025064

CHECK GRAPHIC SCALES BEFORE USING

GRAPHIC SCALE
1/8"=1'-0" 0 4' 8' 16' 24' 32'

TP-65D
61

OCE-FST 08955-100-12-73

SATISFACTORY TO: DATE
J.O.

FAY, SPOFFORD & THORNDIKE, INC.
BOSTON, MASS.
ARCHITECTS – ENGINEERS
DES — DR BK McI CHK H.H.S.
SUBMITTED BY DATE 4/7/77
DIRECTOR
NORDIV
HD. E.I.C.
HD. DIR.
APPROVED DATE
OFFICER IN CHARGE
APPROVED DATE
NORDIV FOR COMMANDER NAVFAC

DEPARTMENT OF THE NAVY NAVAL FACILITIES ENGINEERING COMMAND
NORTHERN DIVISION
NAVAL BASE PHILADELPHIA, PA.
PORTSMOUTH NAVAL SHIPYARD PORTSMOUTH, N.H.
ADDITIONAL CRANE RAIL SYSTEM
CONSTRUCTION, BERTHS 11 AND 13
BORING LOGS— PART I

SIZE	CODE IDENT. NO.	NAVFAC DRAWING NO.
F	80091	2025065

CONSTR. CONTR. NO. N62472-76-C-0746
SCALE: AS SHOWN SPEC. 04-76-0746 SHEET 48 OF 53

NOTES:

1. FOR BORING LOCATION PLAN SEE B-101.
2. ELEVATIONS SHOWN ON THIS SHEET ARE BASED ON PNSY DATUM – SEE V-101 FOR CONVERSION INFORMATION.

SEAL

A/E INFO

APPROVED
David Greenfield
FOR COMMANDER NAVFAC

ACTIVITY:
PER DOCUMENT FROM PNSY CODE 980, KITTERY ME

SATISFACTORY TO DATE: 05/09/16

DES MN DRW CK CHK MN
PM/DM: NATHAN LIBBY
BRANCH MANAGER: NATHAN MAHER
FEAD/PM&E: AMIN BAHROUR
FIRE PROTECTION: N/A

DEPARTMENT OF THE NAVY NAVAL FACILITIES ENGINEERING COMMAND
NAVAL FACILITIES ENGINEERING COMMAND ~ MID-ATLANTIC
PUBLIC WORKS DEPARTMENT – MAINE NAVAL SHIPYARD – PORTSMOUTH, NH
PORTSMOUTH NAVAL SHIPYARD KITTERY, MAINE

STRUCTURAL REPAIRS AT BERTHS 11A, 11B AND 11C

BORING LOGS – SHEET 11 OF 17

EPROJECT NO.: 1356489
CONSTR. CONTR. NO. N40085-XX-C-XXXX
NAVFAC DRAWING NO. 12716032
SHEET 36 OF 144

B-611 FP2-16-672

DRAWFORM REVISION: 10 OCTOBER 2014

FILE NAME: S:\1794\Active\179410203\r\TP-104A PNSY Lifting Study\TP-104A PNSY Lifting Study\02 CADD\04 Geotechnical\FP2-16-672.dwg LAYOUT NAME: BORING LOGS - SHEET 11 OF 17 PLOTTED: Friday, May 13, 2016 - 2:31pm USER: cgoodridge

FILE NAME: S:\1794\Active\1794102031\TP-104A PNSY Lifting Study\TP-104A PNSY Lifting Study\02 CAD\04 Geotechnical\FP2-16-673.dwg LAYOUT NAME: BORING LOGS - SHEET 12 OF 17 PLOTTED: Friday, May 13, 2016 - 2:32pm USER: cgoodridge

REVISIONS				
LTR	DESCRIPTION	PREPD BY	DATE	APPROVED

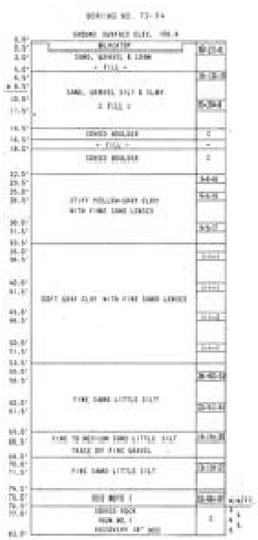

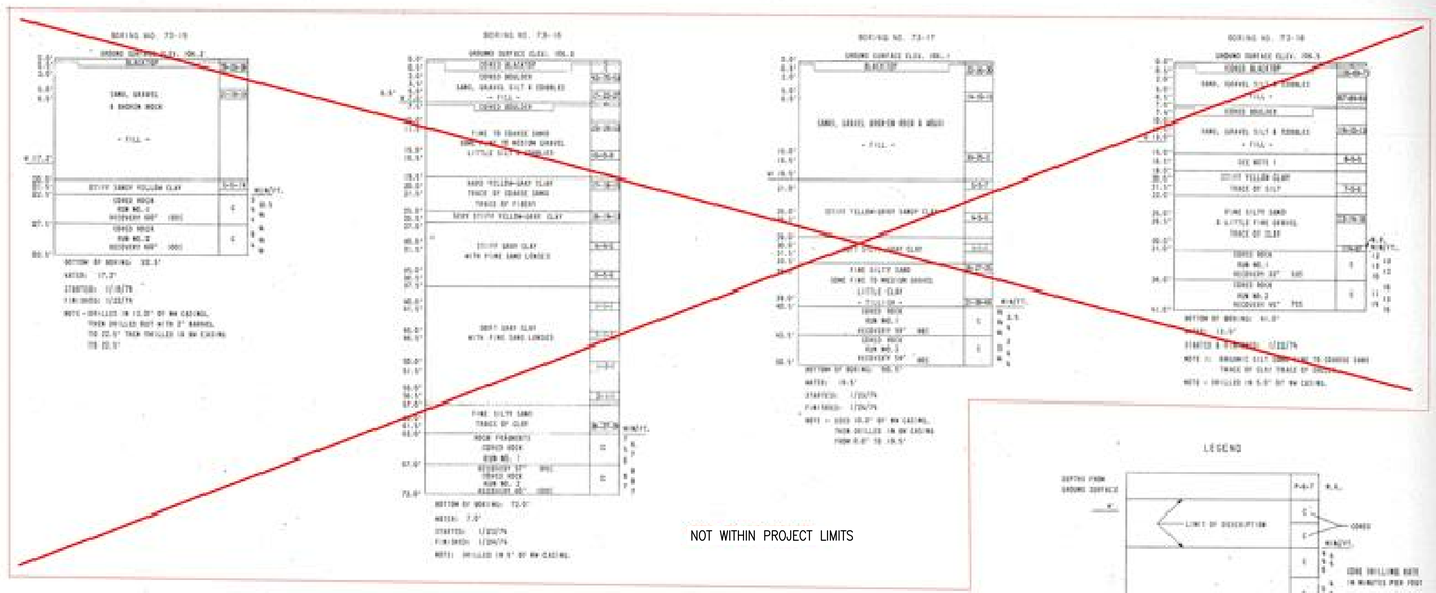

NOT WITHIN PROJECT LIMITS

LEGEND

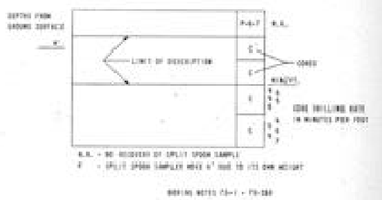

BORING NOTES (S-1 - FP-38)

1. BORINGS WERE TAKEN BETWEEN DECEMBER 19, 1973 AND FEBRUARY 5, 1974 BY AMERICAN DRILLING CO., INC., 490 WATER STREET, EAST PROVIDENCE, RHODE ISLAND.
2. VERTICAL SCALE 1" = 8'
3. CLASSIFICATIONS WERE MADE FROM VISUAL INSPECTION.
4. BORING SAMPLES MAY BE SEEN AT THE PUBLIC WORKS OFFICE, PORTSMOUTH NAVAL SHIPYARD.
5. WATER LEVEL (W) WAS OBTAINED AND THESE OBSERVED AND DO NOT NECESSARILY SHOW THE TRUE GROUND WATER LEVEL.
6. FIGURES AT RIGHT OF DESCRIPTION INDICATE THE NUMBER OF BLOWS TO DRIVE A 2" SPLIT SPOON SAMPLER 6" WITH A 140 POUND HAMMER FALLING 30" EXCEPT AS NOTED.
7. N.W. CASING WAS USED UNLESS OTHERWISE NOTED.

GENERAL NOTES

1. FOR BORING LOCATION SEE NAVFAC DRAWING NO. 2025066.
2. BORINGS WERE TAKEN FOR PURPOSE OF DESIGN AND NOT CONDITION OF BORING PERMITS ONLY.

CHECK GRAPHIC SCALES BEFORE USING

GRAPHIC SCALE
0 4' 8' 16' 24' 32'
1/8" = 1'-0"

TP-643

SATISFACTORY: YES: DATE:	OFFICER IN CHARGE APPROVED DATE	DEPARTMENT OF THE NAVY NAVAL FACILITIES ENGINEERING COMMAND NORTHERN DIVISION NAVAL BASE PHILADELPHIA, PA.	
NOTICE TO CONTRACTOR:		PORTSMOUTH NAVAL SHIPYARD: PORTSMOUTH, N.H.	
		ADDITIONAL CRANE RAIL SYSTEM CONSTRUCTION, BERTHS 11 AND 13	
		BORING LOGS-PART 2	
		DATE: F	CODE IDENT NO: 80091
		NAVFAC DRAWING NO: 2025066	
		CONSTR. CONTR. NO. N62470-76-C-0746	
		SCALE: AS SHOWN	SPEC 04-76-0746 SHEET 49 OF 53

TAY, SPOFFORD & THORNDIKE, INC. BOSTON, MASS. ARCHITECTS - ENGINEERS

NOTES:

1. FOR BORING LOCATION PLAN SEE B-101.
2. ELEVATIONS SHOWN ON THIS SHEET ARE BASED ON PNSY DATUM - SEE V-101 FOR CONVERSION INFORMATION.

APPR	
DATE	
DESCRIPTION	
STM	

NAVFAC

SEAL

MN FST A JOINT VENTURE

A/E INFO

APPROVED
David W. Trumfield
FOR COMMANDER NAVFAC

ACTIVITY:
PER DOCUMENT FROM PNSY CODE 980, KITTERY ME

SATISFACTORY TO DATE: 05/09/16

DES MN DRW CK CHK MN

PM/DM: NATHAN LIBBY

BRANCH MANAGER: NATHAN MAHER

LEAD/PM&E: AMIN BAHROUR

FIRE PROTECTION: N/A

DEPARTMENT OF THE NAVY
NAVAL FACILITIES ENGINEERING COMMAND
PUBLIC WORKS DEPARTMENT - MAINE
PORTSMOUTH NAVAL SHIPYARD

NAVAL FACILITIES ENGINEERING COMMAND - MID-ATLANTIC
NAVAL SHIPYARD - PORTSMOUTH, NH
KITTERY, MAINE

STRUCTURAL REPAIRS AT BERTHS 11A, 11B AND 11C

BORING LOGS - SHEET 12 OF 17

EPROJECT NO.: 1356489

CONSTR. CONTR. NO. N40085-XX-C-XXXX

NAVFAC DRAWING NO. 12716033

SHEET 37 OF 144

B-612 FP2-16-673

DRAWFORM REVISION: 10 OCTOBER 2014

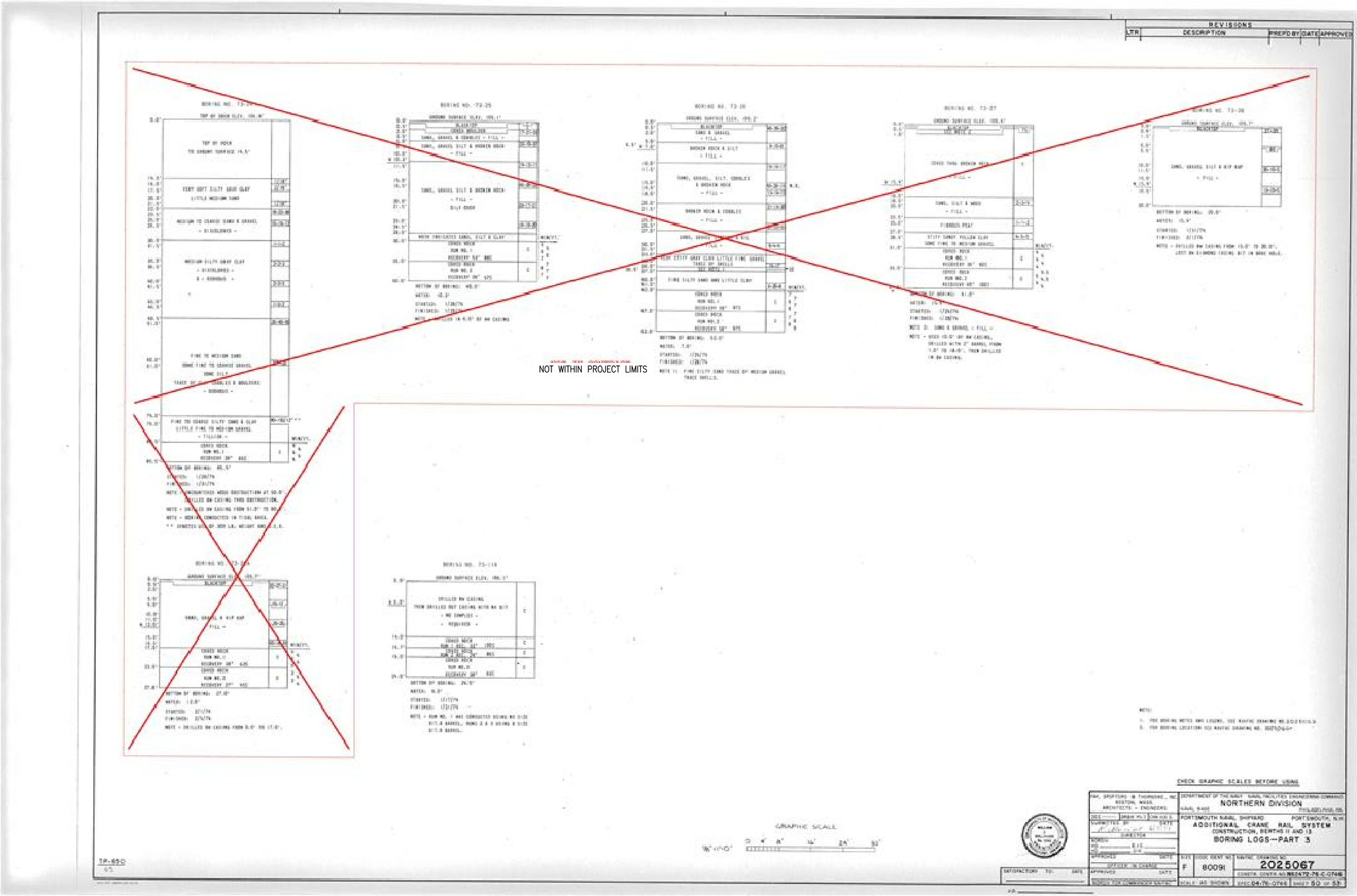

NOTES:

1. FOR BORING LOCATION PLAN SEE B-101.
2. ELEVATIONS SHOWN ON THIS SHEET ARE BASED ON PNSY DATUM – SEE V-101 FOR CONVERSION INFORMATION.

SYM	DESCRIPTION	DATE	APPR

NAVFAC

MARC NICOLIZZO
CIVIL
No. 51724
REGISTERED PROFESSIONAL ENGINEER
COMMONWEALTH OF MASSACHUSETTS

SEAL

MN FST
A JOINT VENTURE
A/E INFO.

APPROVED
David W. Greenfield
FOR COMMANDER NAVFAC

ACTIVITY:
PER DOCUMENT FROM PNSY
CODE 980, KITTERY ME

SATISFACTORY TO DATE: 05/09/16

DES MN DRW CK CHK MN
PM/DM: NATHAN LIBBY
BRANCH MANAGER: NATHAN MAHER
FEAD/PM&E: AMN BAHROUR
FIRE PROTECTION: N/A

DEPARTMENT OF THE NAVY
NAVAL FACILITIES ENGINEERING COMMAND
PUBLIC WORKS DEPARTMENT – MAINE
NAVAL FACILITIES ENGINEERING COMMAND ~ MID-ATLANTIC
NAVAL SHIPYARD – PORTSMOUTH, NH
PORTSMOUTH NAVAL SHIPYARD
KITTERY, MAINE

STRUCTURAL REPAIRS
AT BERTHS 11A, 11B AND 11C

BORING LOGS – SHEET 13 OF 17

EPROJECT NO.: 1356489
CONSTR. CONTR. NO.
N40085-XX-C-XXXX
NAVFAC DRAWING NO.
12716034
SHEET 38 OF 144
B-613 FP2-16-674
DRAWFORM REVISION: 10 OCTOBER 2014

FILE NAME: S:\1794\Active\179410203\V\TP-104A PNSY Lifting Study\TP-104A PNSY Lifting Study\02 CADD\04 Geotechnical\FP2-16-674.dwg LAYOUT NAME: BORING LOGS – SHEET 13 OF 17 PLOTTED: Friday, May 13, 2016 – 2:32pm USER: cgoodridge

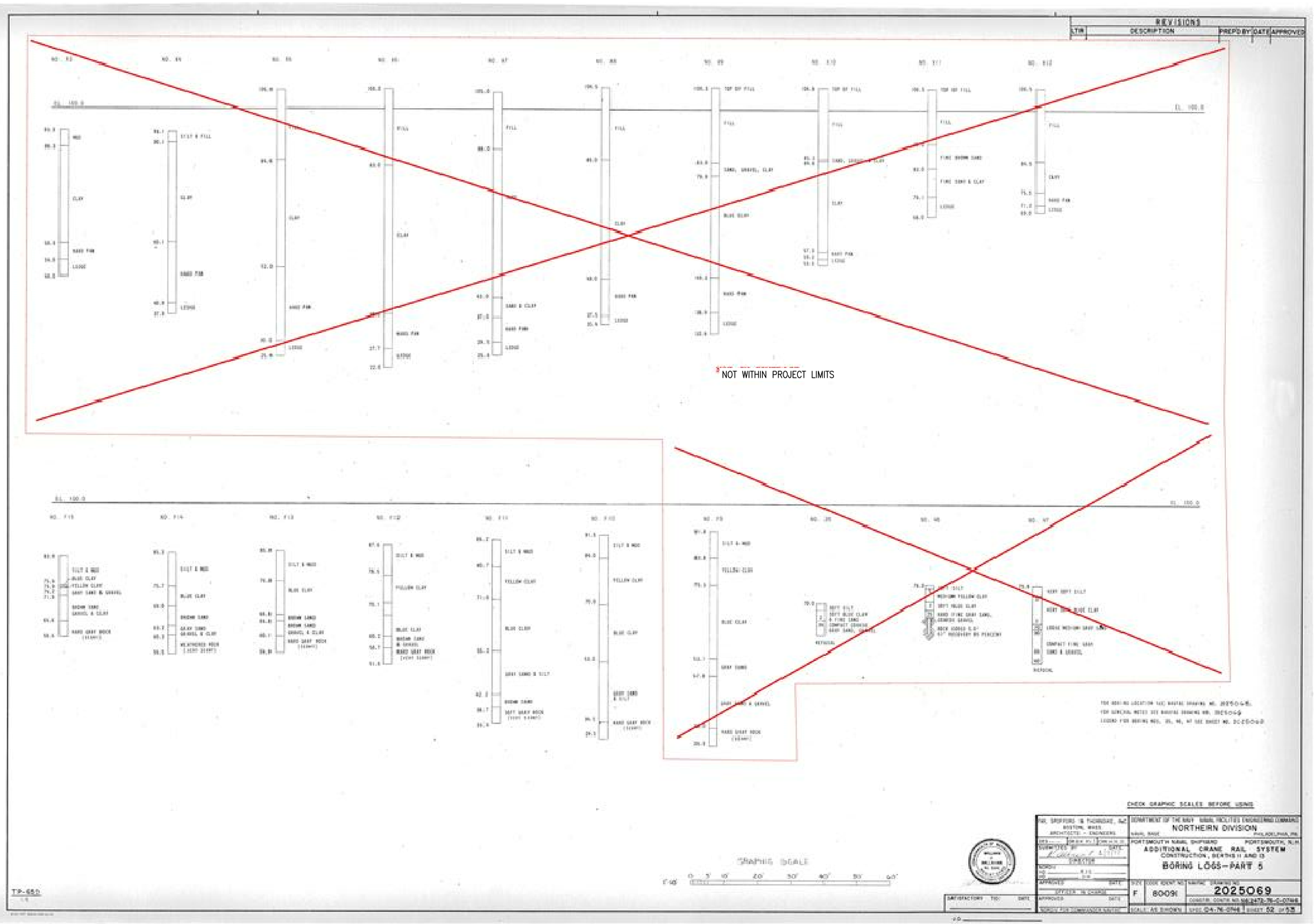

NOTES:

1. FOR BORING LOCATION PLAN SEE B-101.
2. ELEVATIONS SHOWN ON THIS SHEET ARE BASED ON PNSY DATUM – SEE V-101 FOR CONVERSION INFORMATION.

SYM	DESCRIPTION	DATE	APPR

NAVFAC

MARC NICOLAZZO CIVIL No. 51224 REGISTERED PROFESSIONAL ENGINEER

SEAL

MN FST A JOINT VENTURE

A/E INFO

APPROVED David W. Greenfield

FOR COMMANDER NAVFAC

ACTIVITY:
PER DOCUMENT FROM PNSY
CODE 980, KITTERY ME

SATISFACTORY TO DATE: 05/09/16

DES MN DRW CK CHK MN

PM/DM: NATHAN LIBBY

BRANCH MANAGER: NATHAN MAHER

FEAD/PM&E: AMIN BAHROUR

FIRE PROTECTION: N/A

DEPARTMENT OF THE NAVY
NAVAL FACILITIES ENGINEERING COMMAND
PUBLIC WORKS DEPARTMENT – MAINE
NAVAL FACILITIES ENGINEERING COMMAND ~ MID-ATLANTIC
NAVAL SHIPYARD – PORTSMOUTH, NH

PORTSMOUTH NAVAL SHIPYARD
KITTERY, MAINE

STRUCTURAL REPAIRS
AT BERTHS 11A, 11B AND 11C

BORING LOGS – SHEET 14 OF 17

EPROJECT NO.: 1356489

CONSTR. CONTR. NO.
N40085-XX-C-XXXX

NAVFAC DRAWING NO.
12416035

SHEET 39 OF 144

B-614 FP2-16-675

DRAWFORM REVISION: 10 OCTOBER 2014

FILE NAME: S:\1794\Active\179410203\TP-104A PNSY Lifting Study\02 CADD\04 Geotechnical\FP2-16-675.dwg LAYOUT NAME: BORING LOGS – SHEET 14 OF 17 PLOTTED: Friday, May 13, 2016 – 2:32pm USER: cgoodridge

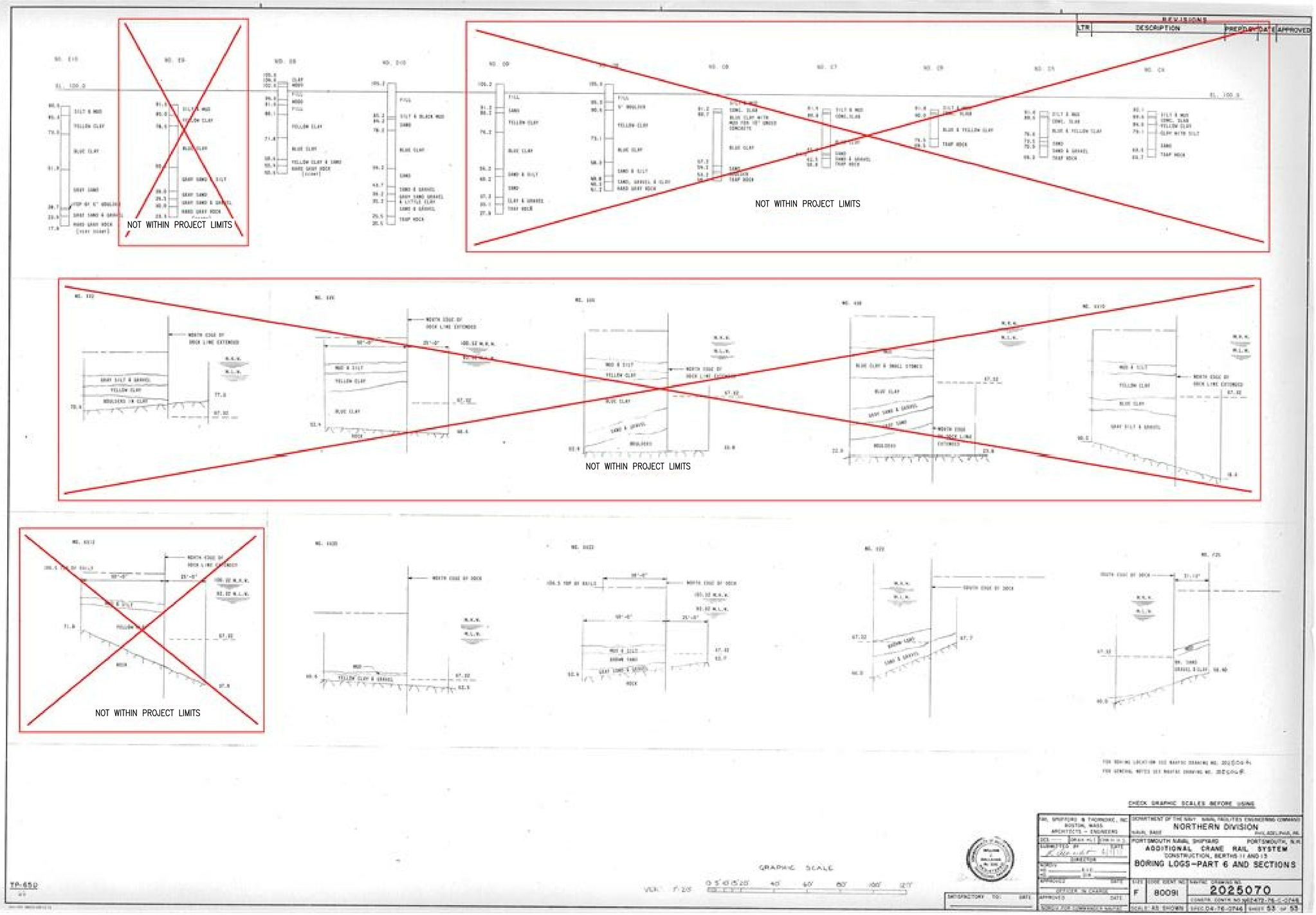

NOTES:

1. FOR BORING LOCATION PLAN SEE B-101.
2. ELEVATIONS SHOWN ON THIS SHEET ARE BASED ON PNSY DATUM – SEE V-101 FOR CONVERSION INFORMATION.

SYM	DESCRIPTION	DATE	APPR

NAVFAC

MN FST A JOINT VENTURE

A/E INFO

APPROVED
David W. Greenfield
FOR COMMANDER NAVFAC

ACTIVITY:
PER DOCUMENT FROM PNSY CODE 980, KITTERY ME

SATISFACTORY TO DATE: 05/09/16

DES MN DRW CK CHK MN

PM/DM: NATHAN LIBBY

BRANCH MANAGER: NATHAN MAHER

FEAD/PM&E: AMIN BAHROUR

FIRE PROTECTION: N/A

DEPARTMENT OF THE NAVY
NAVAL FACILITIES ENGINEERING COMMAND
PUBLIC WORKS DEPARTMENT – MAINE

NAVAL FACILITIES ENGINEERING COMMAND ~ MID-ATLANTIC
NAVAL SHIPYARD – PORTSMOUTH, NH

PORTSMOUTH NAVAL SHIPYARD

KITTERY, MAINE

STRUCTURAL REPAIRS
AT BERTHS 11A, 11B AND 11C

BORING LOGS – SHEET 15 OF 17

EPROJECT NO.: 1356489

CONSTR. CONTR. NO.
N40085-XX-C-XXXX

NAVFAC DRAWING NO.
12716036

SHEET 40 OF 144

B-615 FP2-16-676

DRAWFORM REVISION: 10 OCTOBER 2014

FILE NAME: S:\1794\Active\179410203\r\TP-104A PNSY Lifting Study\02 CADD\04 Geotechnical\FP2-16-676.dwg LAYOUT NAME: BORING LOGS – SHEET 15 OF 17 PLOTTED: Friday, May 13, 2016 – 2:32pm USER: cgoodridge

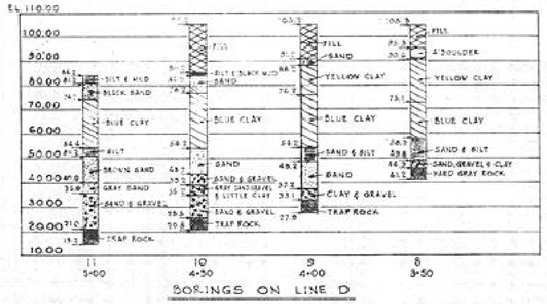

BORINGS ON LINE D

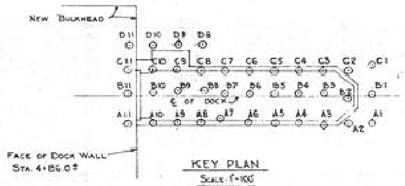

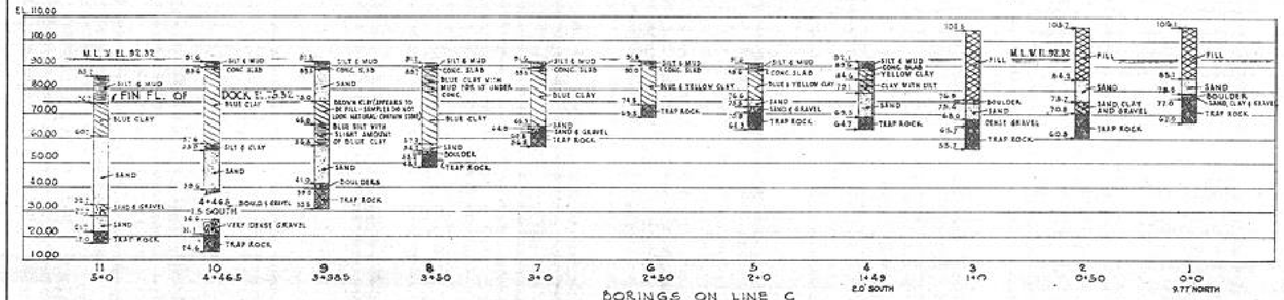

BORINGS ON LINE C

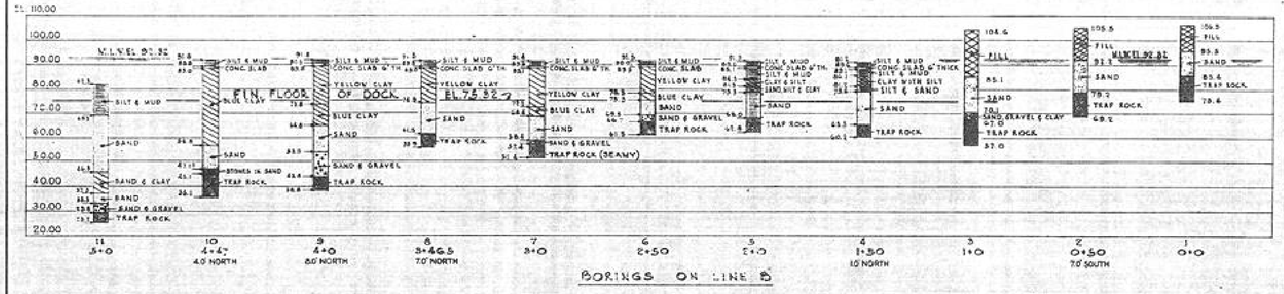

BORINGS ON LINE B

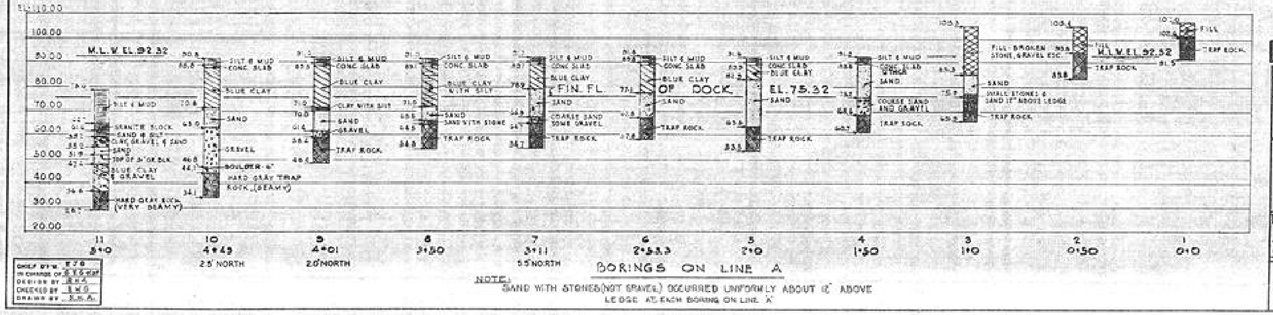

BORINGS ON LINE A

NOTE:
SAND WITH STONES (NOT GRAVEL) OCCURRED UNIFORMLY ABOUT 6' ABOVE LEDGE AT EACH BORING ON LINE 'A'

CHIEF OF W. E26
IN CHARGE OF J.E.S.
DESIGN BY J.M.S.
CHECKED BY J.M.S.
DRAWN BY J.M.S.

REFERENCE DRAWINGS:
LOCATION PLAN – DWG. N° P-1-201
BORINGS – PART II – DWG N° P-1-203

GENERAL NOTE:
U.S.C.&G.S. DATUM & NAVY DATUM
IS M.L.W. = EL. 92.32

REVISED TO INCORPORATE KNOWN FIELD CHANGES

REVISED	DATE	BRIEF	BY

DRY DOCK ENGINEERS
27 WILLIAM ST.
NEW YORK, N. Y.

FREDERIC H. HAMMEL, INC.
MORAN, PROCTOR, FREEMAN & MUESER
PARSONS, KLAPP, BRINCKERHOFF & DOUGLAS
FAY, SPOFFORD & THORNDIKE

NAVY DEPARTMENT BUREAU OF YARDS & DOCKS
U.S. NAVY YARD
PORTSMOUTH, N.H.
DRY DOCK NO. 1
BORINGS
PART I

P.W. Drawing No. DDH-41-66

THIS DRAWING ACCEPTED SUBJECT TO ATTACHED SPECIFICATIONS AUTHORIZING PAYMENT OF 100% ESTIMATE
May 4, 1941

SCALE 1"=20'-0" DRAWING NO. P-1-202
DATE: JULY 12, 1941

BUREAU Y&D DRAWING 283,585
120-9.1-8

NOTES:

1. FOR BORING LOCATION PLAN SEE B-101.
2. ELEVATIONS SHOWN ON THIS SHEET ARE BASED ON PNSY DATUM – SEE V-101 FOR CONVERSION INFORMATION.

GRAPHIC SCALE
1"=20'
20' 0 20' 40'
CHECK GRAPHIC SCALE BEFORE USING

APPR	DATE	DESCRIPTION	SYM

NAVFAC

SEAL

MN FST A JOINT VENTURE
A/E INFO

APPROVED
David W. Shenfield
FOR COMMANDER NAVFAC

ACTIVITY:
PER DOCUMENT FROM PNSY
CODE 980, KITTERY ME

SATISFACTORY TO DATE: 05/09/16

DES: MN DRW: CHG CHK: MN

PM/DM: NATHAN LIBBY

BRANCH MANAGER: NATHAN MAHER

FEAD/PMAE: AMIN BAHROUR

FIRE PROTECTION: N/A

DEPARTMENT OF THE NAVY
NAVAL FACILITIES ENGINEERING COMMAND
PUBLIC WORKS DEPARTMENT – MAINE
PORTSMOUTH NAVAL SHIPYARD

NAVAL FACILITIES ENGINEERING COMMAND – MID-ATLANTIC
NAVAL SHIPYARD – PORTSMOUTH, NH
KITTERY, MAINE

STRUCTURAL REPAIRS
AT BERTHS 11A, 11B AND 11C

BORING LOGS – SHEET 16 OF 17

EPROJECT NO.: 1356489

CONSTR. CONTR. NO. N40085-XX-C-XXXX

NAVFAC DRAWING NO. 12716037

SHEET 41 OF 144

B-616 FP2-16-677

DRAWFORM REVISION: 10 OCTOBER 2014

FILE NAME: S:\1794\Active\1794102031\V-TP-104A PNSY Lifting Study\TP-104A PNSY Lifting Study\02 CAD\04 Geotechnical\FP2-16-677.dwg LAYOUT NAME: BORING LOGS – SHEET 16 OF 17 PLOTTED: Friday, May 13, 2016 – 2:32pm USER: cgoodridge

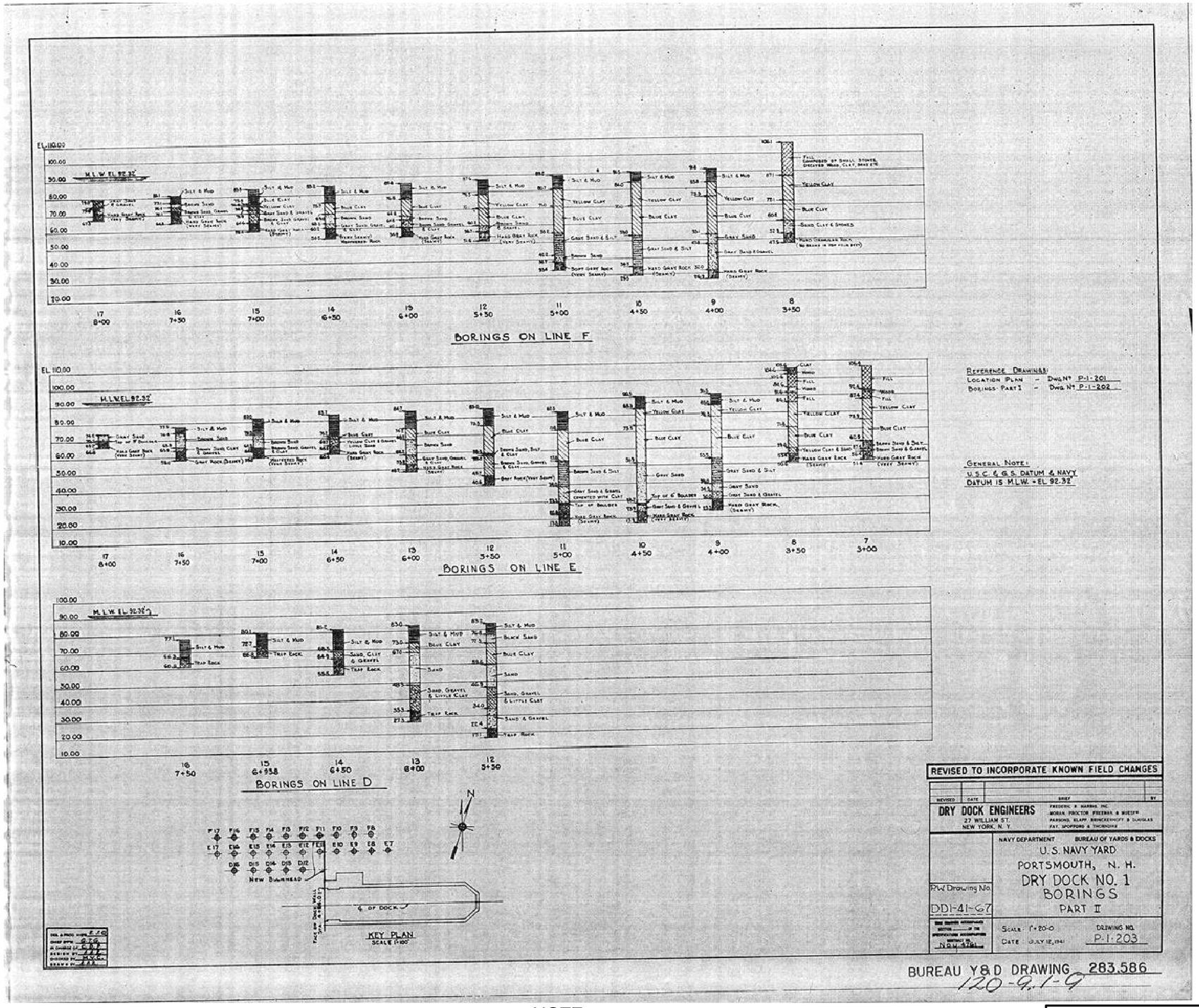

NOTE:

1. FOR BORING LOCATION PLAN SEE B-101.
2. ELEVATIONS SHOWN ON THIS SHEET ARE BASED ON PNSY DATUM – SEE V-101 FOR CONVERSION INFORMATION.

GRAPHIC SCALE

1"=20' 20' 0 20' 40'

CHECK GRAPHIC SCALE BEFORE USING

SYM	DESCRIPTION	DATE	APPR

NAVFAC

MN FST A JOINT VENTURE

A/E INFO.

APPROVED
Daniel W. Greenfield
FOR COMMANDER NAVFAC

ACTIVITY:
PER DOCUMENT FROM PNSY CODE 980, KITTERY ME

SATISFACTORY TO DATE: 05/09/16

DES MN | DRW CHG | CHK MN

PM/DM: NATHAN LIBBY
BRANCH MANAGER: NATHAN MAHER
FEAD/PM&E: AMIN BAHROUR
FIRE PROTECTION: N/A

DEPARTMENT OF THE NAVY
NAVAL FACILITIES ENGINEERING COMMAND
PUBLIC WORKS DEPARTMENT – MAINE
NAVAL FACILITIES ENGINEERING COMMAND ~ MID-ATLANTIC
NAVAL SHIPYARD – PORTSMOUTH, NH
PORTSMOUTH NAVAL SHIPYARD
KITTERY, MAINE

STRUCTURAL REPAIRS AT BERTHS 11A, 11B AND 11C

BORING LOGS – SHEET 17 OF 17

EPROJECT NO.: 1356489
CONSTR. CONTR. NO. N40085-XX-C-XXXX
NAVFAC DRAWING NO. 12716038
SHEET 42 OF 144
B-617 FP2-16-678

DRAWFORM REVISION: 10 OCTOBER 2014

FILE NAME: S:\1794\Active\179410203\r\TP-104A PNSY Lifting Study\TP-104A PNSY Lifting Study\02 CADD\04 Geotechnical\FP2-16-678.dwg LAYOUT NAME: BORING LOGS – SHEET 17 OF 17 PLOTTED: Friday, May 13, 2016 – 2:33pm USER: cgoodridge

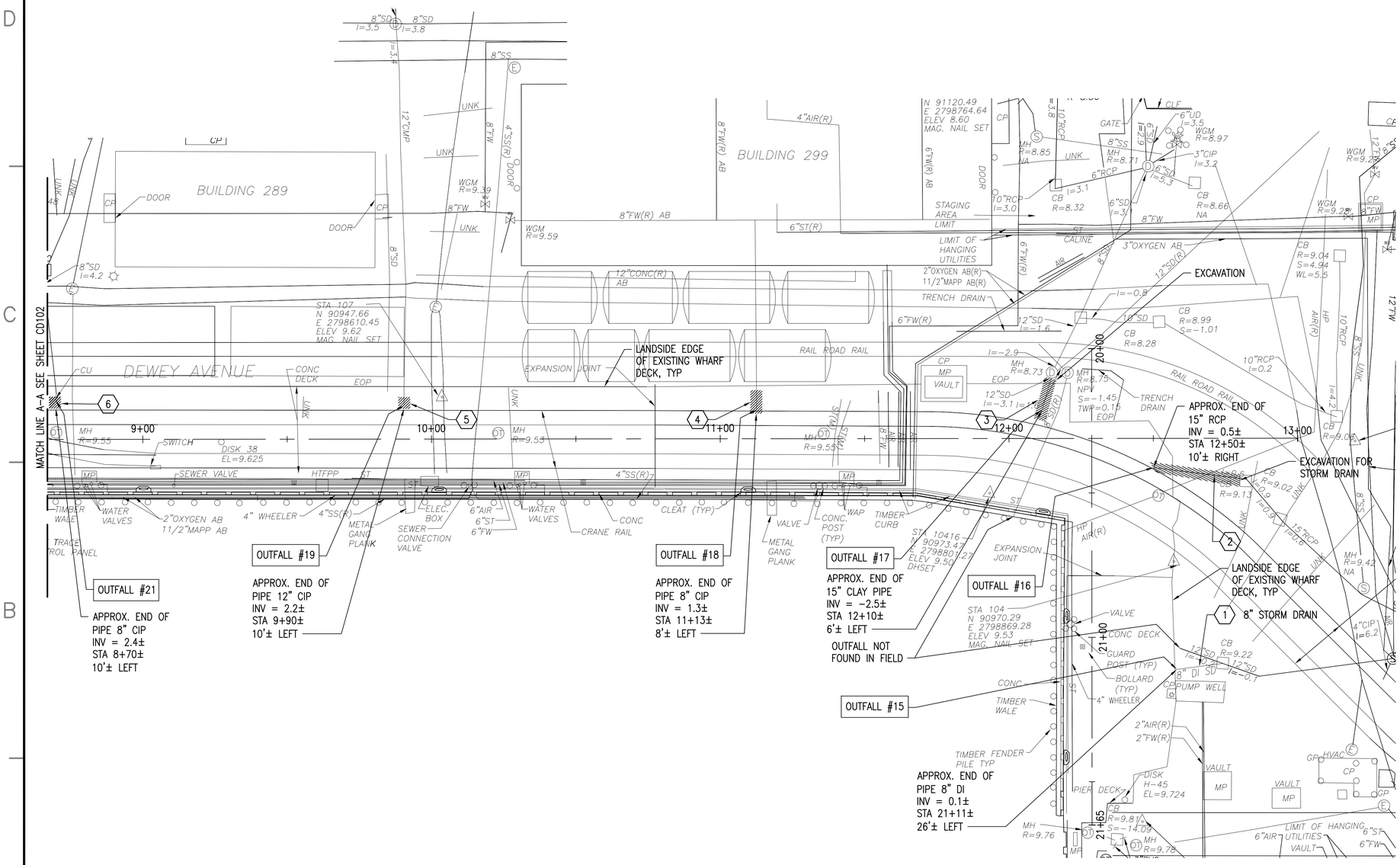

DRAINAGE DEMOLITION PLAN

SCALE: 1" = 20'

DEMOLITION NOTES

1. EXPOSE END OF EXISTING 8" STORM DRAIN OUTFALL. REMOVE AND DISPOSE OF TIMBER/PLYWOOD BULKHEAD AS REQUIRED.
2. EXISTING 15" RCP DRAIN TO BE ABANDONED. PLUG AT OUTFALL AND MANHOLE CONNECTION WITH BRICK AND MORTAR. EXCAVATE FOR NEW STORM DRAIN.
3. REMOVE AND DISPOSE OF 15" CLAY DRAIN PIPE FROM OUTFALL TO MANHOLE AS SHOWN.
4. REMOVE AND DISPOSE OF 3 FEET OF 8" CIP AT END OF EXISTING OUTFALL. MOVE RIP-RAP 1'ø± AS NEEDED.
5. REMOVE AND DISPOSE OF 12" CIP BELL AT END OF PIPE.
6. REMOVE AND DISPOSE OF 8" CIP BELL AT END OF PIPE.
7. REMOVE AND DISPOSE OF 12" RCP BELL AT END OF PIPE, (2 LOCATIONS).
8. REMOVE AND DISPOSE OF 6" PVC BELL AT END OF PIPE.
9. REMOVE AND DISPOSE OF 8" CIP BELL AT END OF PIPE.
10. REMOVE AND DISPOSE 10 FEET OF 8" CIP DRAIN FROM OUTFALL END.

GENERAL NOTES

1. CONTRACTOR TO FIELD VERIFY EXISTING PIPE LOCATIONS, SIZES, MATERIALS, AND INVERTS PRIOR TO ORDERING MATERIAL TO BE INCORPORATED INTO THE WORK.

KEY PLAN

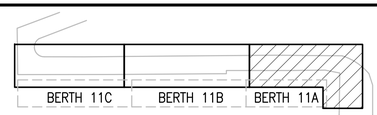

GRAPHIC SCALE

1"=20'

20' 0 20' 40'

CHECK GRAPHIC SCALE BEFORE USING

NO.	DESCRIPTION	DATE	APPR

NAVFAC

DAVID P. ANDERSON CIVIL No. 37119A — 3/19/16 — SEAL

MNFST A JOINT VENTURE — A/E INFO

APPROVED FOR COMMANDER NAVFAC: David W. Grunfeld

FOR COMMANDER NAVFAC

ACTIVITY: PER DOCUMENT FROM PNSY CODE 980, KITTERY ME

SATISFACTORY TO DATE: 05/09/16

DES: KAK | DRW: HBF | CHK: KAK

PM/DM: NATHAN LIBBY

BRANCH MANAGER: NATHAN MAHER

FEAD/PM&E: AMN. BAHROUR

FIRE PROTECTION: N/A

DEPARTMENT OF THE NAVY
NAVAL FACILITIES ENGINEERING COMMAND
PUBLIC WORKS DEPARTMENT - MAINE
PORTSMOUTH NAVAL SHIPYARD

NAVAL FACILITIES ENGINEERING COMMAND ~ MID-ATLANTIC
NAVAL SHIPYARD - PORTSMOUTH, NH
KITTERY, MAINE

STRUCTURAL REPAIRS AT BERTHS 11A, 11B AND 11C

DEMOLITION PLAN - DRAINAGE - SHEET 1 OF 2

EPROJECT NO.: 1356489

CONSTR. CONTR. NO. N40085-XX-C-XXXX

NAVFAC DRAWING NO. 12716039

SHEET 43 OF 144

CD101 | FP2-16-679

DRAWFORM REVISION: 10 OCTOBER 2014

FILE NAME: S:\1794\Active\179410203\VP-104A PNSY Lifting Study\VP-104A PNSY Lifting Study\02 CADD\05 Civil\FP2-16-679.dwg LAYOUT NAME: DEMOLITION PLAN - DRAINAGE - SHEET 1 OF 2 PLOTTED: Friday, May 13, 2016 - 2:33pm USER: cgoodridge

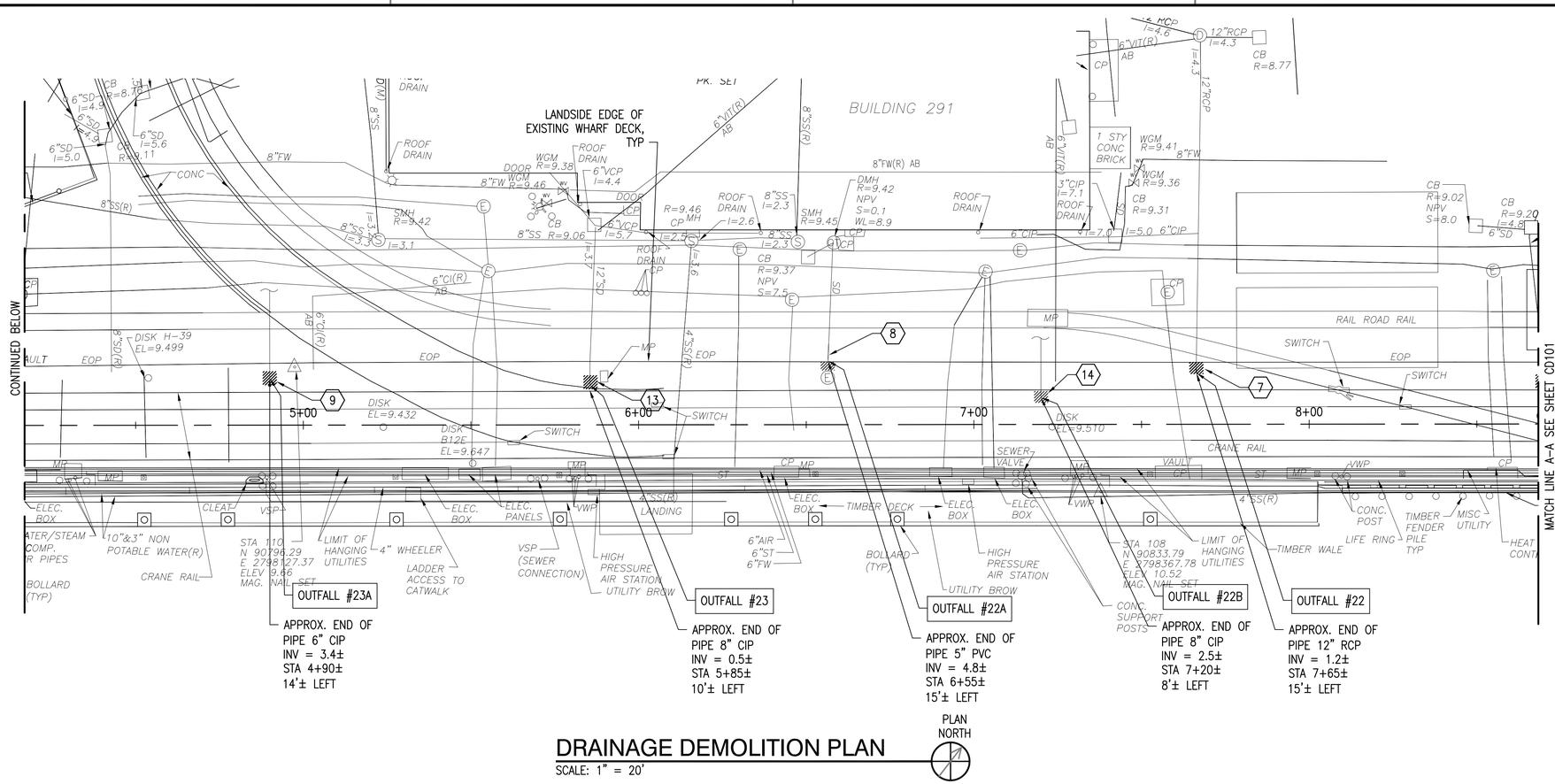

DRAINAGE DEMOLITION PLAN

SCALE: 1" = 20'

PLAN NORTH

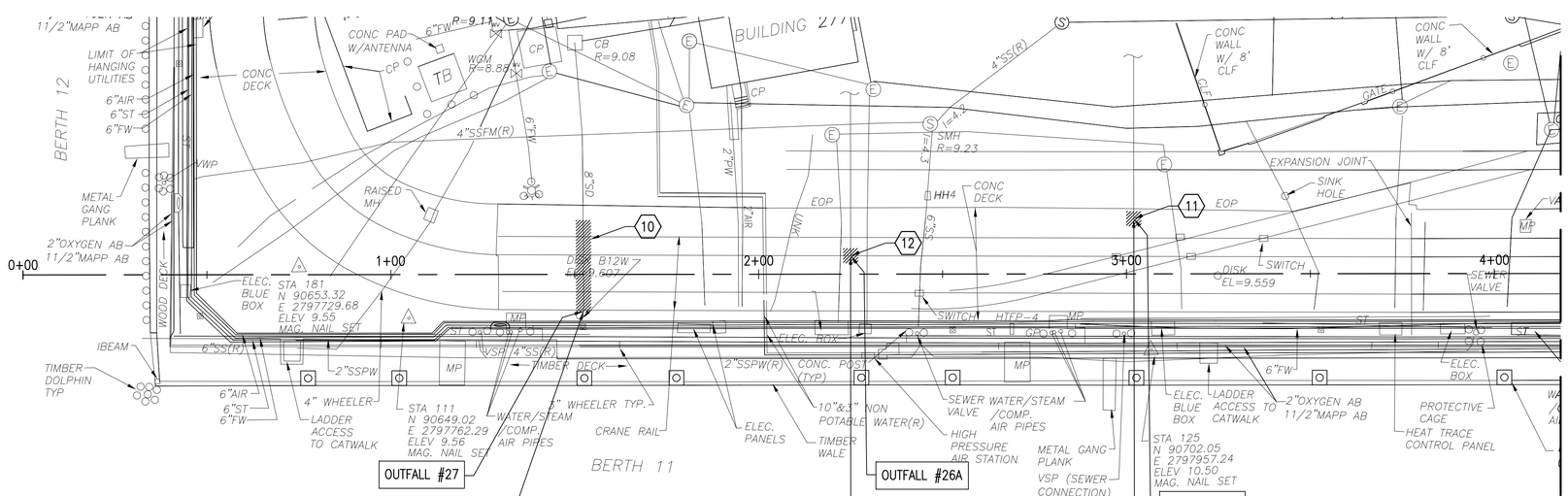

DRAINAGE DEMOLITION PLAN

SCALE: 1" = 20'

PLAN NORTH

DEMOLITION NOTES

1. EXPOSE END OF EXISTING 8" STORM DRAIN OUTFALL.
2. EXISTING 15" RCP DRAIN TO BE ABANDONED. PLUG AT OUTFALL AND MANHOLE CONNECTION WITH BRICK AND MORTAR. EXCAVATE FOR NEW STORM DRAIN.
3. REMOVE AND DISPOSE OF 15" CLAY DRAIN PIPE FROM OUTFALL TO MANHOLE AS SHOWN.
4. REMOVE AND DISPOSE OF 3 FEET OF 8" CIP AT END OF EXISTING OUTFALL.
5. REMOVE AND DISPOSE OF 12" CIP BELL AT END OF PIPE.
6. REMOVE AND DISPOSE OF 8" CIP BELL AT END OF PIPE.
7. REMOVE AND DISPOSE OF 12" RCP BELL AT END OF PIPE.
8. REMOVE AND DISPOSE OF 6" PVC BELL AT END OF PIPE.
9. REMOVE AND DISPOSE OF 6" CIP BELL AT END OF PIPE.
10. REMOVE AND DISPOSE 30 FEET OF 4" CIP DRAIN FROM OUTFALL END.
11. REMOVE AND DISPOSE OF 6" CLAY BELL AT END OF PIPE. REMOVE 1'Ø± RIP-RAP AS NEEDED. REMOVE 10 LF OF DIRT/SOIL FROM PIPE.
12. REMOVE AND DISPOSE 8' OF 8" CIP AT END OF EXISTING OUTFALL.
13. REMOVE AND DISPOSE OF 8" CIP BELL AT END OF PIPE.
14. REMOVE AND DISPOSE 8" CIP BELL AT END OF PIPE.

GENERAL NOTES

1. CONTRACTOR TO FIELD VERIFY EXISTING PIPE LOCATIONS, SIZES, MATERIALS, AND INVERTS PRIOR TO ORDERING MATERIAL TO BE INCORPORATED INTO THE WORK.

KEY PLAN

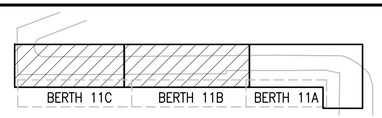

GRAPHIC SCALE

1"=20'

20' 0 20' 40'

CHECK GRAPHIC SCALE BEFORE USING

			APPR
			DATE
			DESCRIPTION
			STM

NAVFAC

COMMONWEALTH OF MASSACHUSETTS — DAVID P. ANDERSON — CIVIL — No. 37119A — REGISTERED PROFESSIONAL ENGINEER — 3/17/16 — SEAL

MN FST — A JOINT VENTURE — A/E INFO

APPROVED (Name and Title): David W. Trunfield — FOR COMMANDER NAVFAC

ACTIVITY: PER DOCUMENT FROM PNSY CODE 980, KITTERY ME

SATISFACTORY TO — DATE: 05/09/16

DES: KAK | DRW: HBF | CHK: KAK

PM/DM: NATHAN LIBBY

BRANCH MANAGER: NATHAN MAHER

LEAD/PM&E: AMIN BAHROUR

FIRE PROTECTION: N/A

DEPARTMENT OF THE NAVY
NAVAL FACILITIES ENGINEERING COMMAND
PUBLIC WORKS DEPARTMENT - MAINE
PORTSMOUTH NAVAL SHIPYARD

NAVAL FACILITIES ENGINEERING COMMAND ~ MID-ATLANTIC
NAVAL SHIPYARD ~ PORTSMOUTH, NH
KITTERY, MAINE

STRUCTURAL REPAIRS AT BERTHS 11A, 11B AND 11C

DEMOLITION PLAN ~ DRAINAGE ~ SHEET 2 OF 2

EPROJECT NO.: 1356489

CONSTR. CONTR. NO. N40085-XX-C-XXXX

NAVFAC DRAWING NO. 12716040

SHEET 44 OF 144

CD102 | FP2-16-680

DRAWFORM REVISION: 10 OCTOBER 2014

FILE NAME: S:\1794\Active\1794102031\TP-104A PNSY Lifting Study\TP-104A PNSY Lifting Study\02 CAD\05 Civil\FP2-16-679.dwg LAYOUT NAME: DEMOLITION PLAN ~ DRAINAGE ~ SHEET 2 OF 2 PLOTTED: Friday, May 13, 2016 ~ 2:33pm USER: cgoodridge

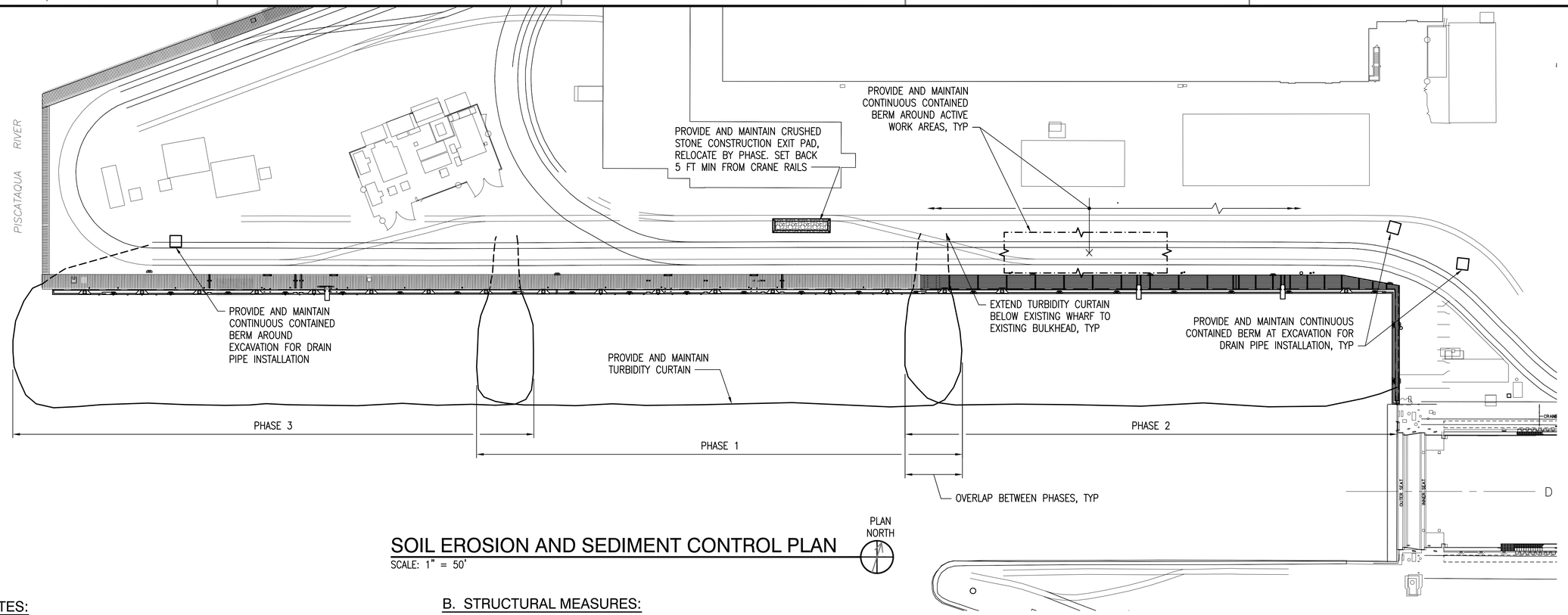

SOIL EROSION AND SEDIMENT CONTROL PLAN

SCALE: 1" = 50'

A. GENERAL NOTES:

1. THE SOIL EROSION AND SEDIMENTATION CONTROL PLAN, DETAILS, AND NOTES INCLUDED HERE ARE INTENDED AS A GENERAL OVERVIEW OF THE TEMPORARY EROSION CONTROL METHODS. PER SPECIFICATIONS, SECTION 01 57 19.00 22 – TEMPORARY ENVIRONMENTAL CONTROLS, THE CONTRACTOR IS REQUIRED TO PREPARE AND SUBMIT A DETAILED STORMWATER MANAGEMENT/EROSION AND SEDIMENTATION CONTROL PLAN, WHICH REFLECTS THE CONTRACTOR'S PROPOSED SCHEDULE OF OPERATIONS.
2. DURING CONSTRUCTION, AND THEREAFTER, EROSION CONTROL MEASURES ARE TO BE IMPLEMENTED AS NOTED. THE SMALLEST PRACTICAL AREA OF LAND SHALL BE EXPOSED AT ANY ONE TIME DURING CONSTRUCTION. WHEN LAND IS EXPOSED DURING DEVELOPMENT, THE EXPOSURE SHALL BE KEPT TO A MAXIMUM OF 30 DAYS.
3. EROSION AND SEDIMENT CONTROL PRACTICES INCLUDE THE USE OF THE FOLLOWING:
   - CRUSHED STONE CONSTRUCTION ENTRANCE/EXIT, CONTINUOUS CONTAINED BERMS, STORM DRAIN SEDIMENT/SILT TRAPS
   - DUST CONTROL BY WET SWEEPING AND VACUUMING
   - STOCKPILES COVERED WITH PLASTIC SHEETING OR GEOTEXTILE
   - CONCRETE WASHOUT CONTAINMENT AND CONTROLS
   - DEWATERING AND PUMPED DISCHARGE CONTAINMENT FILTERING AND CONTROLS
   - PROVIDE ADDITIONAL MEASURES TO CONTROL EROSION AS NECESSARY GIVEN SITE AND WEATHER CONDITIONS
4. THE ENVIRONMENTAL MANAGER SHALL INSPECT ALL INSTALLED EROSION CONTROL MEASURES TO MONITOR THEIR EFFECTIVENESS, AND ASSESS THEIR PROGRESS. ALL EROSION CONTROLS SHALL BE INSPECTED WEEKLY AND BEFORE AND AFTER EVERY 0.5 INCHES OF RAINFALL DURING THE LIFE OF THE PROJECT. ALL DAMAGED EROSION CONTROL MEASURES SHALL BE REPAIRED. SEDIMENT DEPOSITS SHALL BE PERIODICALLY REMOVED.
5. SUBMIT EROSION AND SEDIMENT CONTROL INSPECTION REPORTS TO THE CONTRACTING OFFICER ONCE EVERY 7 CALENDAR DAYS AND BEFORE AND AFTER (24HOURS) A STORM EVENT PRIOR TO PLACEMENT OF PERMANENT STABILIZATION. EROSION AND SEDIMENT CONTROL MEASURES REQUIRING MODIFICATION OR REPAIRS, OR IF ADDITIONAL MEASURES ARE DEEMED NECESSARY MUST BE COMPLETED WITHIN 7 DAYS AND PRIOR TO THE NEXT STORM EVENT.
6. ALL DRAINAGE AND EROSION CONTROL CONSTRUCTION SHALL CONFORM TO THE PROJECT SPECIFICATIONS AND THE STORMWATER MANAGEMENT/EROSION AND SEDIMENTATION CONTROL PLAN.
7. EROSION CONTROL MEASURES AND PLACEMENT OF SEDIMENT BARRIERS SHALL CONFORM TO THE GUIDELINES ESTABLISHED BY MEDEP STANDARDS AND IN ACCORDANCE WITH THE EROSION CONTROL PLAN AND DETAILS HEREIN. EROSION CONTROL MEASURES SHALL CONFORM TO THE LATEST REVISION MAINE EROSION AND SEDIMENT CONTROL BMPS, PUBLISHED BY THE BUREAU OF LAND AND WATER QUALITY MAINE DEPARTMENT OF ENVIRONMENTAL PROTECTION.
8. LIMIT THE AREA OF DISTURBANCE (NOT TO EXCEED ONE ACRE AT ANY ONE TIME) COMMENSURATE WITH THE CONTRACTOR'S CAPABILITY AND PROGRESS IN KEEPING GRADING, AND TEMPORARY AND PERMANENT EROSION CONTROL MEASURES CONCURRENT WITH OPERATIONS. EARTH STOCKPILES ARE TO BE COVERED AND HAVE CONTINUOUS CONTAINED BERMS INSTALLED ALONG THE PERIMETER.
9. DEWATERING ACTVITIES SHALL COMPLY WITH THE CONTRACT SPECIFICATIONS AND THE STATE OF MAINE REGULATIONS FOR CONSTRUCTION DEWATERING. DEWATERING WATER REMOVED FROM THE SITE SHALL BE FILTERED THROUGH AN APPROVED SEDIMENTATION BASIN OR FILTER BAG PRIOR TO BEING DISCHARGED.

B. STRUCTURAL MEASURES:

1. SEDIMENT BARRIERS:
   CONTINUOUS CONTAINED BERMS SHALL BE PROVIDED IN THE AREAS SHOWN ON THE DRAWINGS. THEY ARE INTENDED PRIMARILY TO INTERCEPT AND FILTER SMALL VOLUMES OF "SHEET FLOWING" RUNOFF. THE BERMS SHALL BE FILLED WITH AN EROSION CONTROL MIX CONSISTING OF A WELL-GRADED MIXTURE OF PARTICLE SIZES AND MAY CONTAIN ROCKS LESS THAN 4" IN DIAMETER. EROSION CONTROL MIX MUST BE FREE OF REFUSE, PHYSICAL CONTAMINANTS, AND MATERIAL TOXIC TO PLANT GROWTH. THE MIX COMPOSITION SHALL MEET THE FOLLOWING STANDARDS:
   - THE ORGANIC MATTER CONTENT SHALL BE BETWEEN 80% AND 100%, DRY WEIGHT BASIS.
   - THE ORGANIC MATTER CONTENT SHALL BE BETWEEN 80% AND 100%, DRY WEIGHT BASIS
   - PARTICLE SIZE BY WEIGHT SHALL BE 100% PASSING A 6" SCREEN AND A MINIMUM OF 70%, MAXIMUM OF 85%, PASSING A 0.75" SCREEN.
   - THE ORGANIC PORTION NEEDS TO BE FIBROUS AND ELONGATED.
   - SOLUBLE SALTS CONTENT SHALL BE <4.0 MMHOS/CM.
   - LARGE PORTIONS OF SILTS, CLAYS OR FINE SANDS ARE NOT ACCEPTABLE IN THE MIX.
   - THE PH SHOULD FALL BETWEEN 5.0 AND 8.0.

   SEE DETAILS FOR ADDITIONAL INFORMATION.

C. MAINTENANCE:

1. DURING THE PERIOD OF CONSTRUCTION:
   - ALL SEDIMENT BARRIERS SHALL BE CHECKED WEEKLY. REPAIRS SHALL BE MADE TO CORRECT UNDERMINING OR DETERIORATION OF THE BARRIERS.
2. WINTER CONSTRUCTION – CONSTRUCTION ACTIVITY PERFORMED DURING THE PERIOD FROM NOVEMBER 1 THROUGH APRIL 15:
   - IF DISTURBED AREAS ARE NOT STABILIZED WITH PERMANENT MEASURES BY NOVEMBER 1, OR IF NEW SOIL DISTURBANCE OCCURS AFTER NOVEMBER 1 BUT BEFORE APRIL 15, THEN THESE AREAS MUST BE PROTECTED AND RUNOFF FROM THEM MUST BE CONTROLLED BY ADDITIONAL MEASURES AND RESTRICTIONS. WINTER EROSION CONTROL MEASURES SHALL CONFORM TO MAINE EROSION AND SEDIMENT CONTROL BMPS SECTION A-3.

D. SUGGESTED EROSION CONTROL SEQUENCING:

1. INSTALL EROSION CONTROLS, INCLUDING CRUSHED STONE CONSTRUCTION ENTRANCE/EXIT, CATCH BASIN SILT SACKS AND CONTINUOUS CONTAINED BERMS AND WHERE SHOWN ON THE PLANS PRIOR TO ANY OPERATIONS THAT WILL DISTURB SOILS OR GENERATE EROSION.
2. WORK INVOLVING THE EXCAVATION FOR UTILITIES SHALL NOT BE LEFT EXPOSED FOR LONGER THAN 30 DAYS.
   - INSTALL EROSION PROTECTION.
   - REMOVE PAVEMENT AND EXCAVATE TO GRADE. EXCAVATED SOILS TO BE STOCKPILED BEHIND THE AREA OF EXCAVATION. STOCKPILES OF EXCAVATED SOILS SHALL BE COVERED AT ALL TIMES AND SURROUNDED WITH CONTINUOUS CONTAINED BERMS.
   - COMPLETE INSTALLATION OF UTILITY.
   - INSTALL DRAINAGE SYSTEMS, PIPES, STRUCTURES AND OTHER UTILITY APPURTENANCES WITHIN THE EXCAVATED AREAS.
3. GRADE AREAS TO BE PAVED. ALL AREAS SHALL BE STABILIZED WITHIN 72 HOURS OF ACHIEVING FINISHED GRADE.
4. CONTINUOUS CONTAINED BERMS, CATCH BASIN PROTECTION MEASURES AND THE CONSTRUCTION ENTRANCE/EXIT SHALL BE MAINTAINED UNTIL ALL GRADED AREAS HAVE BEEN STABILIZED.
5. FINE GRADE AND COMPACT AND PAVE.
6. REMOVE ACCUMULATED SEDIMENTS FROM EROSION CONTROL DEVICES AND DISPOSE OF IN A SECURE LOCATION. REMOVE TEMPORARY EROSION CONTROLS.
7. THE CONTRACTOR SHALL MAINTAIN CONTINUOUS CONTAINED BERMS/TUBES AROUND ANY DEBRIS GENERATING WORK ACTIVITIES AS SHOWN ON THE PLANS. THE CONTRACTOR SHALL ALSO MONITOR AND KEEP THE WHARF DECK CLEAN IN ALL AREAS THE CONTRACTOR USES TO TRANSPORT MATERIAL, EQUIPMENT AND PERSONNEL.
8. KEEP RECESSED CRANE RAIL POCKETS CLEAN AND FREE OF DEBRIS.

E. CONSTRUCTION ENTRANCE/EXIT SPECIFICATIONS:

1. CRUSHED STONE FOR THE CONSTRUCTION ENTRANCE/EXIT SHALL BE ANGULAR AND 2-3INCHES IN DIAMETER, OR FROM RECYCLED CONCRETE OF EQUIVALENT SIZE. THE THICKNESS SHALL BE NOT LESS THAN 6 INCHES.
2. THE SIZE OF THE CONSTRUCTION ENTRANCE/EXIT SHALL BE 12 FEET WIDE BY 50 FEET LONG.
3. THE CONSTRUCTION ENTRANCE/EXIT SHALL BE MAINTAINED IN A CONDITION THAT WILL PREVENT TRACKING OR FLOWING OF SEDIMENT ONTO EXISTING PAVEMENT. THIS MAY REQUIRE PERIODIC TOPDRESSING WITH ADDITIONAL STONE AS CONDITIONS DEMAND, AND REPAIR AND/OR CLEANOUT OF ANY MEASURES USED TO TRAP SEDIMENT. ALL SEDIMENT SPILLED, WASHED, OR TRACKED ONTO EXISTING PAVEMENT MUST BE REMOVED PROMPTLY.
4. WHEELS SHALL BE CLEANED TO REMOVE MUD PRIOR TO ENTRANCE ONTO EXISTING PAVEMENT. WHEN WASHING IS REQUIRED, IT SHALL BE DONE ON AN AREA STABILIZED WITH STONE WHICH DRAINS INTO AN APPROVED SEDIMENT TRAPPING DEVICE.

LEGEND:

- EXISTING FEATURES SHOWN THUS
- FEATURES TO BE PROVIDED UNDER THIS CONTRACT SHOWN THUS
- ■ CATCH BASIN
- ● DRAIN MANHOLE

NOTE:

FOR DETAILS, SEE SHEET C-501

GRAPHIC SCALE

1"=50' (50' 0 50' 100')

CHECK GRAPHIC SCALE BEFORE USING

APPR	DATE	DESCRIPTION	MJS

NAVFAC

COMMONWEALTH OF MASSACHUSETTS — DAVID P. ANDERSON — CIVIL — No. 37119A — REGISTERED PROFESSIONAL ENGINEER — 3/7/16 — SEAL

MNFST A JOINT VENTURE — A/E INFO

APPROVED: David W. Dunfield — FOR COMMANDER NAVFAC

ACTIVITY: PER DOCUMENT FROM PNSY CODE 980, KITTERY ME

SATISFACTORY TO: DATE: 05/09/14

DES: DPA | DRW: RWT | CHK: DPA

PM/DM: NATHAN LIBBY

BRANCH MANAGER: NATHAN MAHER

FEAD/PMdE: AMIN BAHROUR

FIRE PROTECTION: N/A

DEPARTMENT OF THE NAVY
NAVAL FACILITIES ENGINEERING COMMAND
PUBLIC WORKS DEPARTMENT - MAINE
PORTSMOUTH NAVAL SHIPYARD

NAVAL FACILITIES ENGINEERING COMMAND – MID-ATLANTIC
NAVAL SHIPYARD - PORTSMOUTH, NH — KITTERY, MAINE

STRUCTURAL REPAIRS AT BERTHS 11A, 11B AND 11C

SOIL EROSION AND SEDIMENT CONTROL PLAN

EPROJECT NO.: 1356489

CONSTR. CONTR. NO.: N40085-XX-C-XXXX

NAVFAC DRAWING NO.: 12716041

SHEET 45 OF 144

C-101 | FP2-16-681

DRAWFORM REVISION: 10 OCTOBER 2014

FILE NAME: S:\1794\Active\179410203\VTP-104A PNSY Lifting Study\VTP-104A PNSY Lifting Study\02 CAD\05 Civil\FP2-16-681.dwg LAYOUT NAME: SOIL EROSION AND SEDIMENT CONTROL PLAN PLOTTED: Friday, May 13, 2016 - 2:34pm USER: cpoodridge

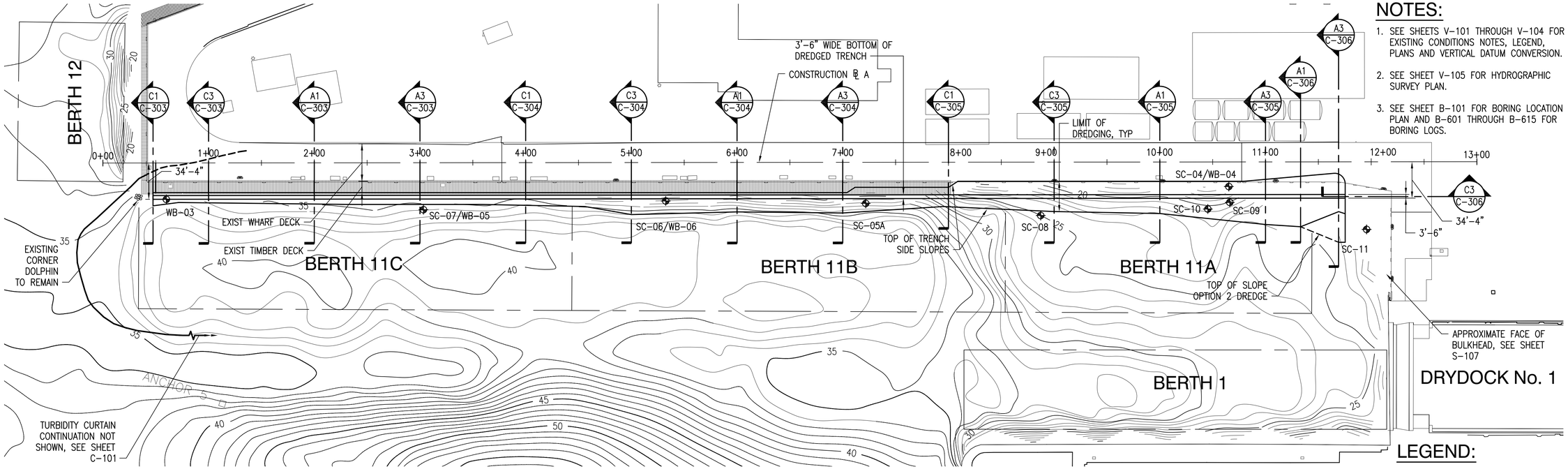

NOTES:

1. SEE SHEETS V-101 THROUGH V-104 FOR EXISTING CONDITIONS NOTES, LEGEND, PLANS AND VERTICAL DATUM CONVERSION.
2. SEE SHEET V-105 FOR HYDROGRAPHIC SURVEY PLAN.
3. SEE SHEET B-101 FOR BORING LOCATION PLAN AND B-601 THROUGH B-615 FOR BORING LOGS.

LEGEND:

WB3 ⊕ BORING LOCATION

SC-03 ⊕ SEDIMENT SAMPLE LOCATION

DREDGING PLAN

SCALE: 1" = 50'

PLAN NORTH

NOTE: DREDGING PLAN SOUNDINGS AND/OR CONTOURS ARE SHOWN IN FEET BELOW MEAN LOWER LOW WATER (MLLW) DATUM.

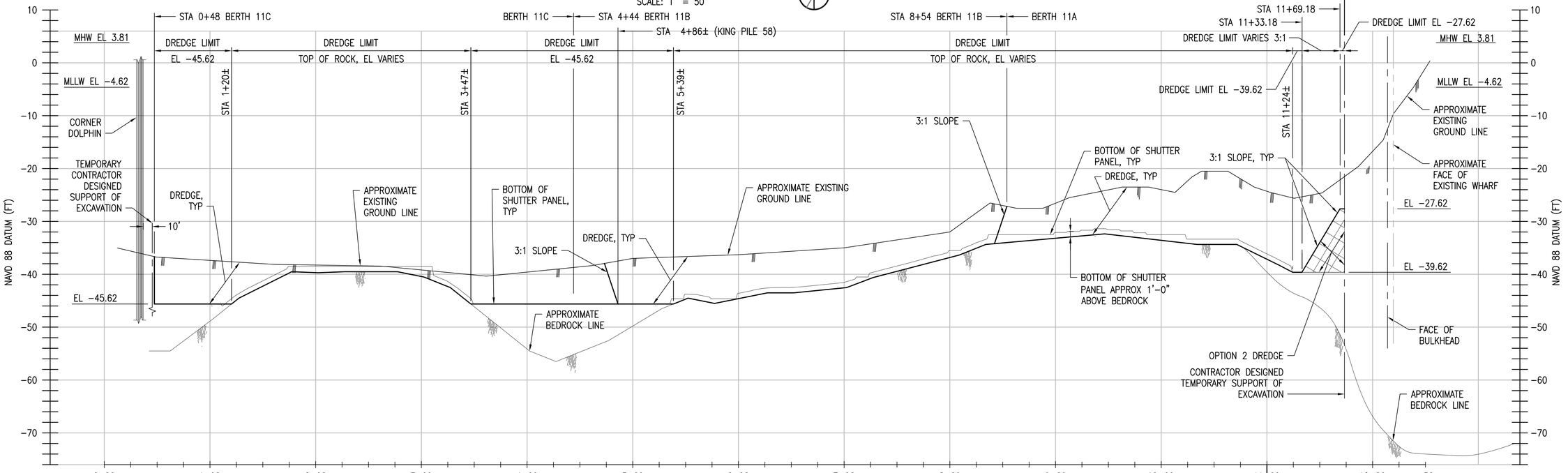

DREDGING PROFILE

SCALE: 1" = 50' HORZ
1" = 10' VERT

B1

NOTE: DREDGING PROFILE IS SHOWN IN FEET AND BASED ON NAVD 88 DATUM.

GRAPHIC SCALE

1"=10' 10' 0 10' 20'

1"=50' 50' 0 50' 100'

CHECK GRAPHIC SCALE BEFORE USING

DEPARTMENT OF THE NAVY
NAVAL FACILITIES ENGINEERING COMMAND
PUBLIC WORKS DEPARTMENT - MAINE
PORTSMOUTH NAVAL SHIPYARD

NAVAL FACILITIES ENGINEERING COMMAND – MID-ATLANTIC
NAVAL SHIPYARD – PORTSMOUTH, NH
KITTERY, MAINE

STRUCTURAL REPAIRS AT BERTHS 11A, 11B AND 11C

DREDGING PLAN – SHEET 1 OF 2

EPROJECT NO.: 1356489

CONSTR. CONTR. NO.: N40085-XX-C-XXXX

NAVFAC DRAWING NO.: 12716042

SHEET 46 OF 144

C-102 | FP2-16-682

DRAWFORM REVISION: 10 OCTOBER 2014

APPROVED: David W. Grunfeld
FOR COMMANDER NAVFAC

ACTIVITY: PER DOCUMENT FROM PNSY CODE 980, KITTERY ME

SATISFACTORY TO DATE: 05/09/14

DES: DPA | DRW: FLC | CHK: DPA

PM/DM: NATHAN LIBBY

BRANCH MANAGER: NATHAN MAHER

FEAD/PM&E: AMIN BAHROUR

FIRE PROTECTION: N/A

COMMONWEALTH OF MASSACHUSETTS
DAVID P. ANDERSON
CIVIL
No. 37119A
REGISTERED PROFESSIONAL ENGINEER
3/9/16
SEAL

MNFST A JOINT VENTURE
A/E INFO

APPR | DATE | DESCRIPTION | SYM

FILE NAME: S:\1794\Active\1794102003\V\TP-104A PNSY Lifting Study\TP-104A PNSY Lifting Study\02 CAD\05 Civil\FP2-16-682.dwg LAYOUT NAME: DREDGING PLAN - SHEET 1 OF 2 PLOTTED: Friday, May 13, 2016 - 2:35pm USER: cgoodridge

ESTIMATED DREDGE VOLUMES	
BERTH	VOLUME (CY)
11A	1600
11A (BID OPTION 2)	285
11B	1250
11C (BID OPTION 1)	610
TOTAL	3745

NOTE:

DREDGE VOLUME BASED ON MAXIMUM PERMISSIBLE SLOPE AND BASIS OF PERMITTED SEDIMENT REMOVAL QUANTITY. CONTRACTOR IS NOT REQUIRED TO DREDGE TO THE 1:3 SLOPE LIMITS SHOWN SO LONG AS THE PANELS CAN BE INSTALLED TO THE REQUIRED ELEVATION AND SEALED AT THE BASE.

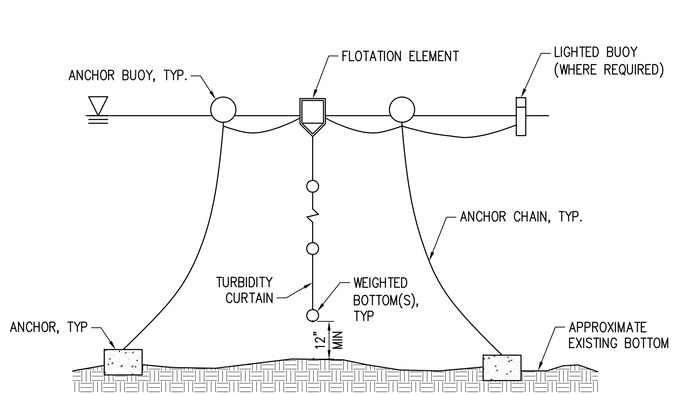

NOTE: PROVIDE ANCHORED TURBIDITY CURTAIN, COMPLETE, DESIGNED FOR SITE SPECIFIC CONDITIONS, ENVIRONMENTAL PERMIT REQUIREMENTS, AND CONTRACT REQUIREMENTS. MAINTAIN THE CURTAIN THROUGHOUT THE DURATION OF THE WORK.

DETAIL - ANCHORED TURBIDITY CURTAIN

NOT TO SCALE

NOTES:

1. SEE V-101 THROUGH V-104 FOR EXISTING CONDITIONS NOTES, LEGEND, PLANS AND VERTICAL DATUM CONVERSION.
2. SEE V-105 FOR HYDROGRAPHIC SURVEY PLAN.
3. SEE B-101 FOR BORING LOCATION PLAN AND B-601 THROUGH B-615 FOR BORING LOGS.

GRAPHIC SCALE

1"=50'

50' 0 50' 100'

CHECK GRAPHIC SCALE BEFORE USING

APPR	DATE	DESCRIPTION	MJS
			DPA

NAVFAC

COMMONWEALTH OF MASSACHUSETTS
DAVID P. ANDERSON
CIVIL
No. 37119
REGISTERED PROFESSIONAL ENGINEER
5/9/16
SEAL

MN FST
A JOINT VENTURE
A/E INFO

APPROVED
David W. Grunfeld
FOR COMMANDER NAVFAC

ACTIVITY:
PER DOCUMENT FROM PNSY
CODE 980, KITTERY ME

SATISFACTORY TO DATE: 05/09/16

DES: DPA | DRW: FLC | CHK: DPA

PM/DM: NATHAN LIBBY

BRANCH MANAGER: NATHAN MAHER

FEAD/PM&E: AMIN BAHROUR

FIRE PROTECTION: N/A

DEPARTMENT OF THE NAVY
NAVAL FACILITIES ENGINEERING COMMAND
PUBLIC WORKS DEPARTMENT - MAINE
PORTSMOUTH NAVAL SHIPYARD

NAVAL FACILITIES ENGINEERING COMMAND ~ MID-ATLANTIC
NAVAL SHIPYARD ~ PORTSMOUTH, NH
KITTERY, MAINE

STRUCTURAL REPAIRS
AT BERTHS 11A, 11B AND 11C

DREDGING PLAN ~ SHEET 2 OF 2

EPROJECT NO.: 1356489

CONSTR. CONTR. NO.
N40085-XX-C-XXXX

NAVFAC DRAWING NO.
12716043

SHEET 47 OF 144

C-103 | FP2-16-683

DRAWFORM REVISION: 10 OCTOBER 2014

FILE NAME: S:\1794\Active\179410203\v\1P-104A PNSY Lifting Study\1P-104A PNSY Lifting Study\02 CADD\05 Civil\FP2-16-683.dwg LAYOUT NAME: DREDGING PLAN - SHEET 2 OF 2 PLOTTED: Friday, May 13, 2016 - 2:35pm USER: rgoodridge

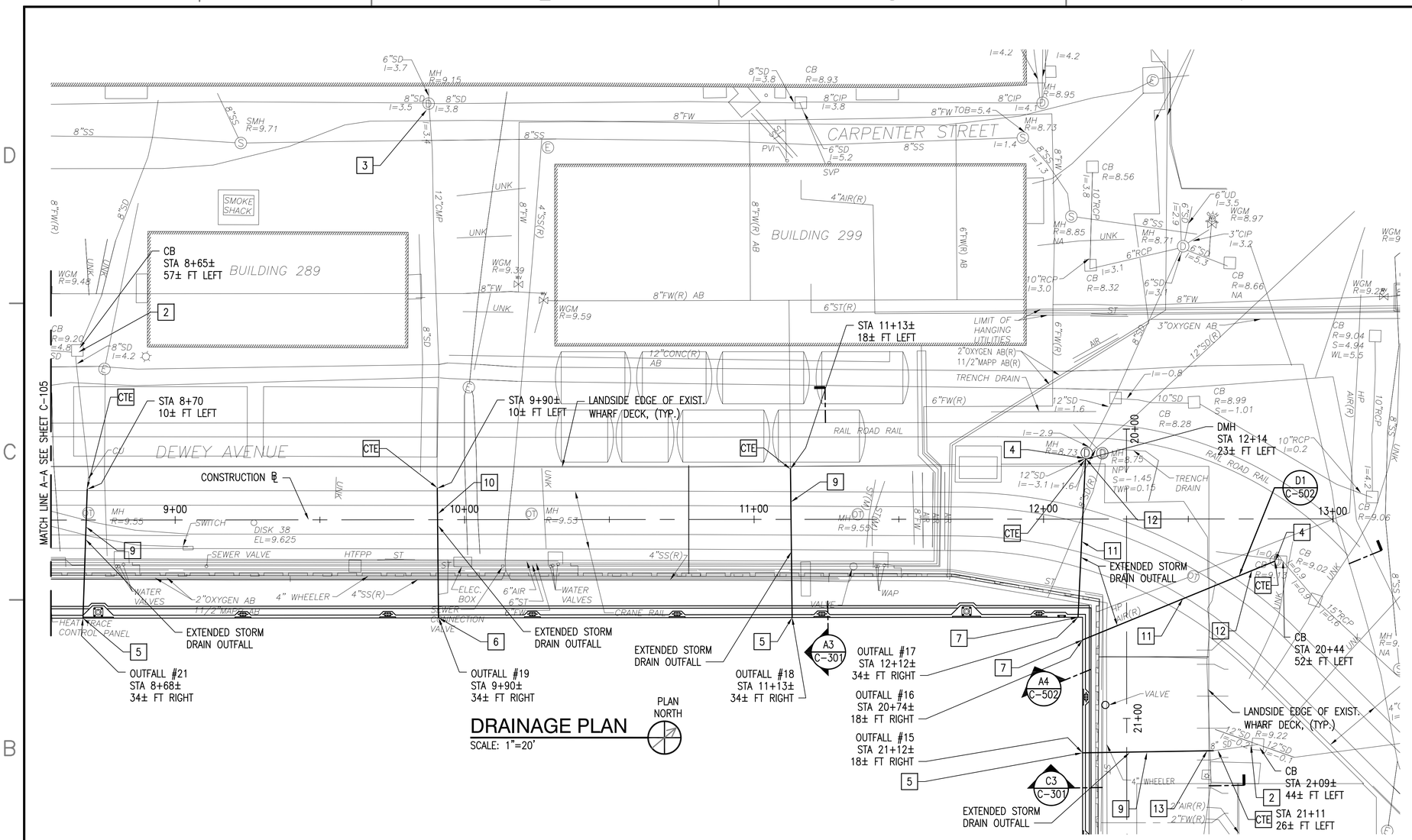

DRAINAGE PLAN

SCALE: 1"=20'

GENERAL NOTES

1. EXISTING DRAIN PIPE TO BE EXTENDED BY INSTALLING PVC DRAIN PIPE.
2. CONNECT TO EXISTING DRAIN PIPE WITH ELASTROMERIC SLEEVE. SEE DETAILS ON SHEET C-502.
3. INSTALL IN-LINE ELASTROMERIC CHECK VALVE IN EXISTING MH'S, CB'S, OR END OF PIPE AS SHOWN.
4. STORM DRAIN EXTENSIONS SHALL BE ROUTED TO AVOID EXISTING AND PROPOSED PILES.
5. ENSURE EDGE OF OPENING FOR STORM DRAIN PIPE PENETRATIONS ARE A MINIMUM OF 18 INCHES FROM NEAREST EDGE OF KING PILE FLANGE. MAKE NECESSARY ADJUSTMENTS TO DRAIN ALIGNMENT, IF NECESSARY.
6. PAINT OUTFALLS SIGNS ON FACE OF CONCRETE BULKHEAD. MATCH EXISTING SIZE AND COLOR.

☐ DRAINAGE SYSTEM NOTES

1. PROVIDE 6" IN-LINE ELASTOMERIC CHECK VALVE IMMEDIATELY DOWNSTREAM OF STRUCTURE.
2. PROVIDE 8" IN-LINE ELASTOMERIC CHECK VALVE IMMEDIATELY DOWNSTREAM OF STRUCTURE.
3. PROVIDE 12" IN-LINE ELASTOMERIC CHECK VALVE IMMEDIATELY DOWNSTEAM OF STRUCTURE.
4. PROVIDE 18" IN-LINE ELASTOMERIC CHECK VALVE IMMEDIATELY DOWNSTREAM OF STRUCTURE.
5. PROVIDE 10" IN-LINE ELASTOMERIC CHECK VALVE AT END OF PIPE.
6. PROVIDE 15" IN-LINE ELASTOMERIC CHECK VALVE AT END OF PIPE.
7. PROVIDE 18" IN-LINE ELASTOMERIC CHECK VALVE AT END OF PIPE.
8. PROVIDE 8" PVC DRAIN PIPE.
9. PROVIDE 10" PVC DRAIN PIPE.
10. PROVIDE 15" PVC DRAIN PIPE.
11. PROVIDE 18" PVC DRAIN PIPE.
12. PROVIDE 18" PVC DRAIN PIPE BETWEEN CATCH BASIN AND EDGE OF LANDSIDE WHARF DECK. PROTECT AND MAINTAIN EXISTING RAIL SUPPORTS AND BACKFILL AND RESTORE SURFACE, SEE DETAIL ON SHEET C-502. CONNECT TO EXISTING STRUCTURE. SEE TYPICAL DRAIN PIPE CONNECTION DETAIL ON SHEET C-502
13. ADD 10" PVC 22 1/2° PVC BEND AS NECESSARY TO AVOID PILES.

CTE CONNECT TO EXISTING.

14. PROVIDE 8" IN-LINE ELASTOMERIC CHECK VALVE AT END OF PIPE.

KEY PLAN

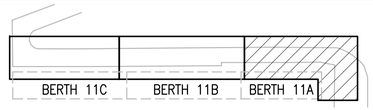

GRAPHIC SCALE

1"=20' 20' 0 20' 40'

CHECK GRAPHIC SCALE BEFORE USING

APPR	DATE	DESCRIPTION	SYM

NAVFAC

COMMONWEALTH OF MASSACHUSETTS — DAVID P. ANDERSON — CIVIL — No. 37119A — REGISTERED PROFESSIONAL ENGINEER — 3/9/16 — SEAL

MNFST A JOINT VENTURE — A/E NPR

APPROVED (Signature and Date): David W. Trumfield
FOR COMMANDER NAVFAC
ACTIVITY: PER DOCUMENT FROM PNSY CODE 980, KITTERY ME
SATISFACTORY TO — DATE: 06/09/16
DES: KAK | DRW: HBF | CHK: KAK
PM/DM: NATHAN LIBBY
BRANCH MANAGER: NATHAN MAHER
FEAD/PM&E: AMN BAHROUR
FIRE PROTECTION: N/A

DEPARTMENT OF THE NAVY
NAVAL FACILITIES ENGINEERING COMMAND
PUBLIC WORKS DEPARTMENT - MAINE
PORTSMOUTH NAVAL SHIPYARD

NAVAL FACILITIES ENGINEERING COMMAND – MID-ATLANTIC
NAVAL SHIPYARD - PORTSMOUTH, NH
KITTERY, MAINE

STRUCTURAL REPAIRS AT BERTHS 11A, 11B AND 11C

STORM DRAINAGE PLAN – SHEET 1 OF 2

EPROJECT NO.: 1356489
CONSTR. CONTR. NO.: N40085-XX-C-XXXX
NAVFAC DRAWING NO.: 12716044
SHEET 48 OF 144
C-104 | FP2-16-684

DRAWFORM REVISION: 10 OCTOBER 2014

FILE NAME: S:\1794\Active\179410203\VTP-104A PNSY Lifting Study\TP-104A PNSY Lifting Study\02 CAD\05 Civil\FP2-16-685.dwg LAYOUT NAME: STORM DRAINAGE PLAN – SHEET 1 OF 2 PLOTTED: Friday, May 13, 2016 – 2:36pm USER: cgoodridge

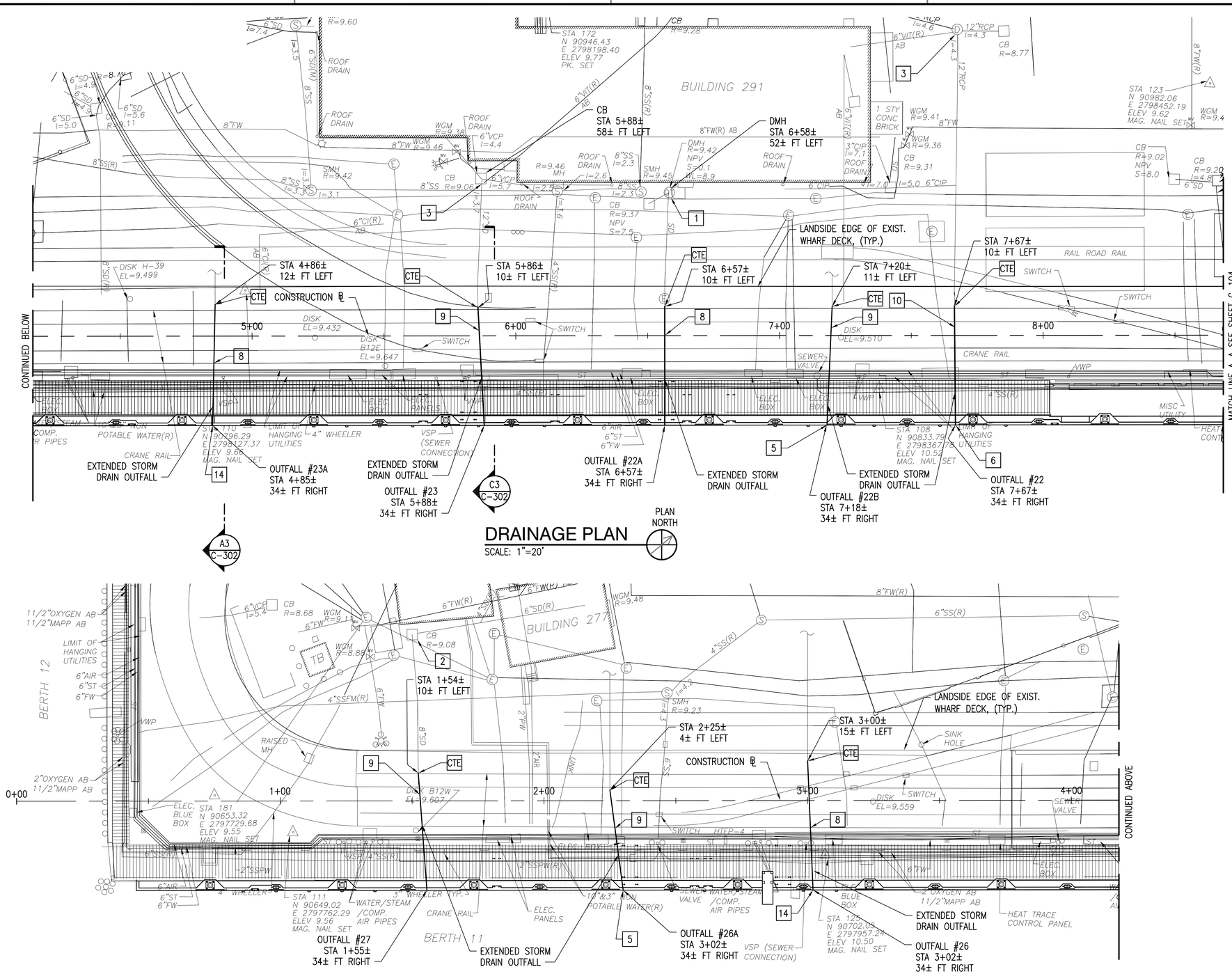

DRAINAGE PLAN

SCALE: 1"=20'

PLAN NORTH

DRAINAGE PLAN

SCALE: 1"=20'

PLAN NORTH

GENERAL NOTES

1. EXISTING DRAIN PIPE TO BE EXTENDED BY INSTALLING PVC DRAIN PIPE.
2. CONNECT TO EXISTING DRAIN PIPE WITH ELASTROMERIC SLEEVE. SEE DETAILS ON SHEET C-502.
3. INSTALL IN-LINE ELASTROMERIC CHECK VALVE IN EXISTING MH'S, CB'S, OR END OF PIPE AS SHOWN. GC TO FIELD VERIFY PIPE SIZES OF EXISTING PIPES PRIOR TO ORDERING VALVES.
4. STORM DRAIN EXTENSIONS SHALL BE ROUTED TO AVOID EXISTING AND PROPOSED PILES.
5. ENSURE EDGE OF OPENING FOR STORM DRAIN PIPE PENETRATIONS ARE A MINIMUM OF 18 INCHES FROM NEAREST EDGE OF KING PILE FLANGE. MAKE NECESSARY ADJUSTMENTS TO DRAIN ALIGNMENT, IF NECESSARY.
6. REPAINT OUTFALLS SIGNS ON FACE OF CONCRETE BULKHEAD. MATCH EXISTING SIZE AND COLOR.

☐ DRAINAGE SYSTEM NOTES

1. PROVIDE 6" IN-LINE ELASTOMERIC CHECK VALVE IMMEDIATELY DOWNSTREAM OF STRUCTURE.
2. PROVIDE 8" IN-LINE ELASTOMERIC CHECK VALVE IMMEDIATELY DOWNSTREAM OF STRUCTURE.
3. PROVIDE 12" IN-LINE ELASTOMERIC CHECK VALVE IMMEDIATELY DOWNSTEAM OF STRUCTURE.
4. PROVIDE 18" IN-LINE ELASTOMERIC CHECK VALVE IMMEDIATELY DOWNSTREAM OF STRUCTURE.
5. PROVIDE 10" IN-LINE ELASTOMERIC CHECK VALVE AT END OF PIPE.
6. PROVIDE 15" IN-LINE ELASTOMERIC CHECK VALVE AT END OF PIPE.
7. PROVIDE 18" IN-LINE ELASTOMERIC CHECK VALVE AT END OF PIPE.
8. PROVIDE 8" PVC DRAIN PIPE.
9. PROVIDE 10" PVC DRAIN PIPE.
10. PROVIDE 15" PVC DRAIN PIPE.
11. PROVIDE 18" PVC DRAIN PIPE.
12. PROVIDE 18" PVC DRAIN PIPE BETWEEN CATCH BASIN AND EDGE OF LANDSIDE WHARF DECK. PROTECT AND MAINTAIN EXISTING RAIL SUPPORTS AND BACKFILL AND RESTORE SURFACE, SEE DETAIL ON SHEET C-502. CONNECT TO EXISTING STRUCTURE. SEE TYPICAL DRAIN PIPE CONNECTION DETAIL ON SHEET C-502
13. ADD 10" PVC 22 1/2° PVC BEND AS NECESSARY TO AVOID PILES.

CTE CONNECT TO EXISTING.

14. PROVIDE 8" IN-LINE ELASTOMERIC CHECK VALVE AT END OF PIPE.

KEY PLAN

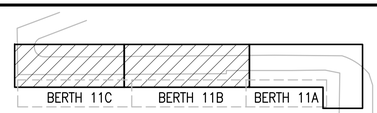

GRAPHIC SCALE

1"=20' 20' 0 20' 40'

CHECK GRAPHIC SCALE BEFORE USING

APPR	DATE	DESCRIPTION	STA

NAVFAC

COMMONWEALTH OF MASSACHUSETTS DAVID P. ANDERSON CIVIL No. 37119A REGISTERED PROFESSIONAL ENGINEER 3/9/16 SEAL

MNFST A JOINT VENTURE A/E INFO

APPROVED: David W. Thurnfield FOR COMMANDER NAVFAC

ACTIVITY: PER DOCUMENT FROM PNSY CODE 980, KITTERY ME

SATISFACTORY TO DATE: 05/09/16

DES: KAK DRW: HBF CHK: KAK

PM/DM: NATHAN LIBBY

BRANCH MANAGER: NATHAN MAHER

LEAD/PM&E: AMIN BAHROUR

FIRE PROTECTION: N/A

DEPARTMENT OF THE NAVY
NAVAL FACILITIES ENGINEERING COMMAND
PUBLIC WORKS DEPARTMENT - MAINE
PORTSMOUTH NAVAL SHIPYARD

NAVAL FACILITIES ENGINEERING COMMAND ~ MID-ATLANTIC
NAVAL SHIPYARD ~ PORTSMOUTH, NH
KITTERY, MAINE

STRUCTURAL REPAIRS AT BERTHS 11A, 11B AND 11C

STORM DRAINAGE PLAN ~ SHEET 2 OF 2

EPROJECT NO.: 1356489

CONSTR. CONTR. NO. N40085-XX-C-XXXX

NAVFAC DRAWING NO. 12716045

SHEET 49 OF 144

C-105 | FP2-16-685

DRAWFORM REVISION: 10 OCTOBER 2014

FILE NAME: S:\1794\Active\1794102003\YP-104A PNSY Lifting Study\YP-104A PNSY Lifting Study\02 CADD\05 Civil\FP2-16-685.dwg LAYOUT NAME: STORM DRAINAGE PLAN ~ SHEET 2 OF 2 PLOTTED: Friday, May 13, 2016 ~ 2:36pm USER: cgoodridge

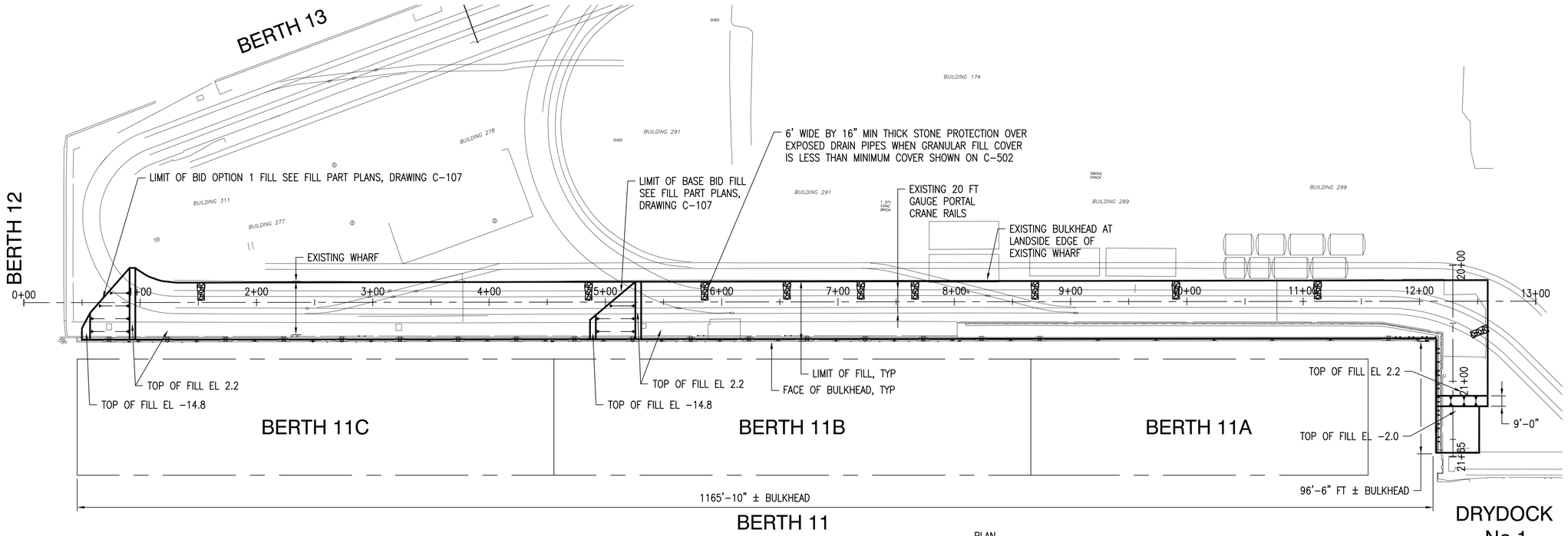

PLAN - FILL BEHIND BULKHEAD

SCALE: 1" = 50'

PLAN NORTH

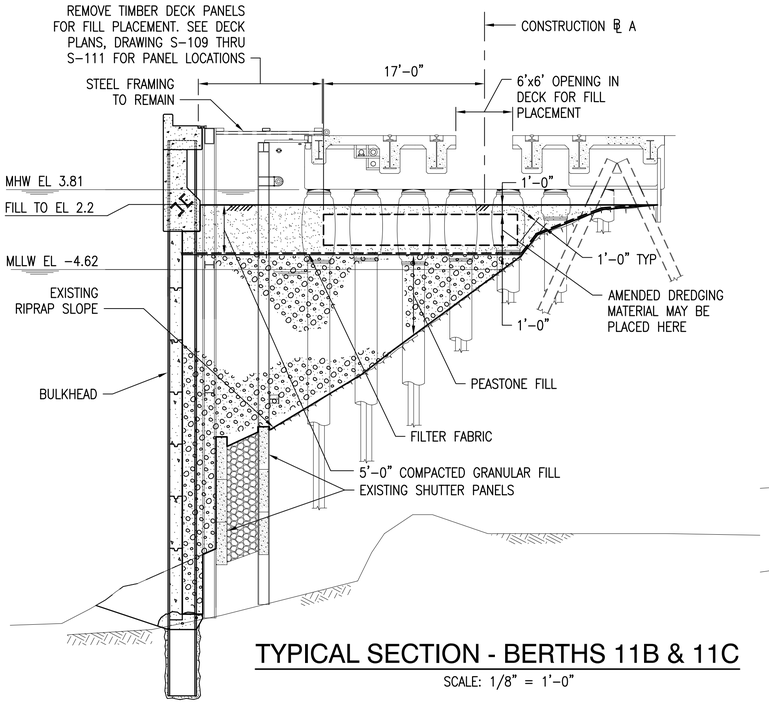

TYPICAL SECTION - BERTHS 11B & 11C

SCALE: 1/8" = 1'-0"

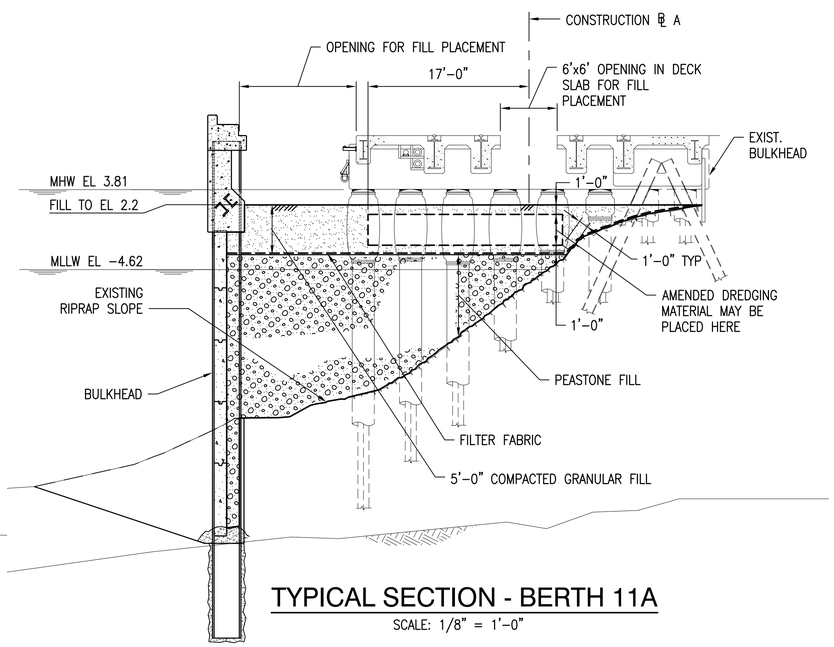

TYPICAL SECTION - BERTH 11A

SCALE: 1/8" = 1'-0"

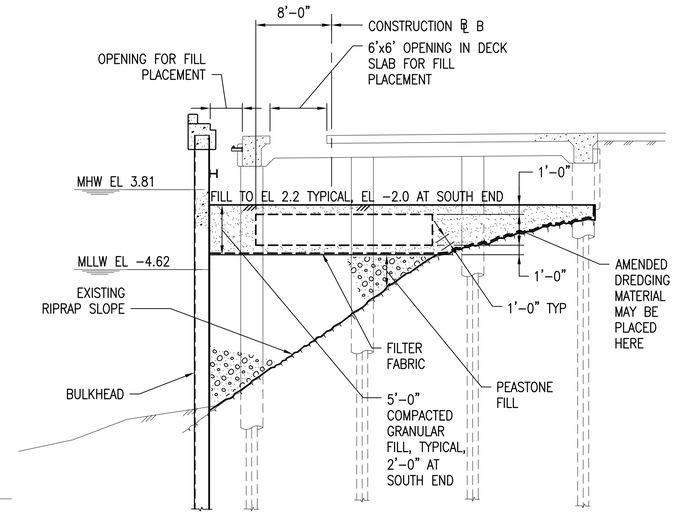

TYPICAL SECTION - BERTH 11A (EAST END)

SCALE: 1/8" = 1'-0"

1/8"=1'-0" 4' 0 4' 8' 12' 16'

GRAPHIC SCALE

1"=50' 50' 0 50' 100'

CHECK GRAPHIC SCALE BEFORE USING

APPR | DATE | DESCRIPTION | STM | MJS

NAVFAC

COMMONWEALTH OF MASSACHUSETTS DAVID P. ANDERSON CIVIL No. 37119A REGISTERED PROFESSIONAL ENGINEER 5/9/16 SEAL

MNFST A JOINT VENTURE A/E INFO

APPROVED David W. Thurfield FOR COMMANDER NAVFAC

ACTIVITY: PER DOCUMENT FROM PNSY CODE 980, KITTERY ME

SATISFACTORY TO DATE: 05/09/16

DES: MN | DRW: FLC | CHK: DWH

PM/DM: NATHAN LIBBY

BRANCH MANAGER: NATHAN MAHER

LEAD/PM&E: AMIN BAHROUR

FIRE PROTECTION: N/A

DEPARTMENT OF THE NAVY
NAVAL FACILITIES ENGINEERING COMMAND
PUBLIC WORKS DEPARTMENT - MAINE
PORTSMOUTH NAVAL SHIPYARD

NAVAL FACILITIES ENGINEERING COMMAND ~ MID-ATLANTIC
NAVAL SHIPYARD ~ PORTSMOUTH, NH
KITTERY, MAINE

STRUCTURAL REPAIRS AT BERTHS 11A, 11B AND 11C

PLAN OF FILL AREAS BEHIND BULKHEAD

EPROJECT NO.: 1356489

CONSTR. CONTR. NO. N40085-XX-C-XXXX

NAVFAC DRAWING NO. 12716046

SHEET 50 OF 144

C-106 | FP2-16-686

DRAWFORM REVISION: 10 OCTOBER 2014

FILE NAME: S:\1794\Active\1794102031\TP-104A PNSY Lifting Study\TP-104A PNSY Lifting Study\02. CAD\05 Civil\FP2--16--686.dwg LAYOUT NAME: PLAN OF FILL AREAS BEHIND BULKHEAD PLOTTED: Friday, May 13, 2016 - 2:37pm USER: cgoodridge

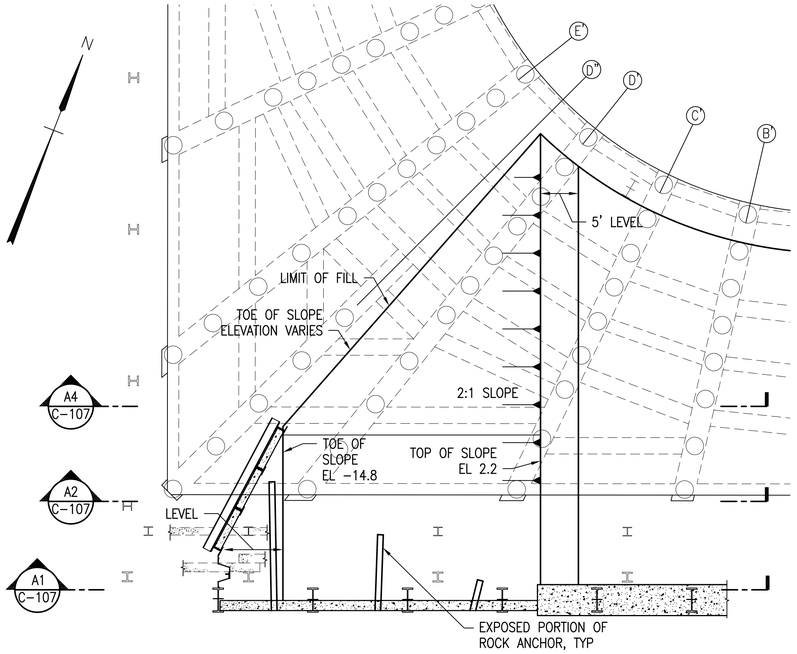

PART PLAN - WEST LIMIT OF BID OPTION 1

SCALE: 1" = 10'

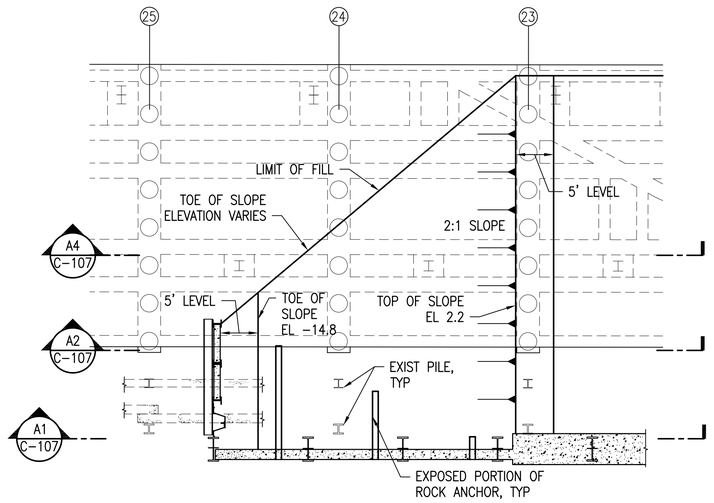

PART PLAN - WEST LIMIT OF BASE BID

SCALE: 1" = 10'

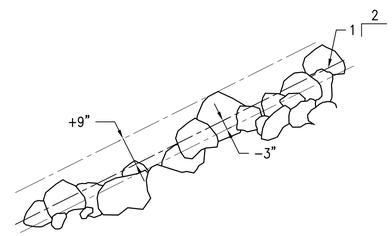

NOTE:

RIPRAP STONE SHALL BE IN ACCORDANCE WITH MAINE DOT STANDARDS SPEC MATERIAL ITEM 703.25, STONE FILL.

SLOPE TOLERANCE DETAIL

NOT TO SCALE

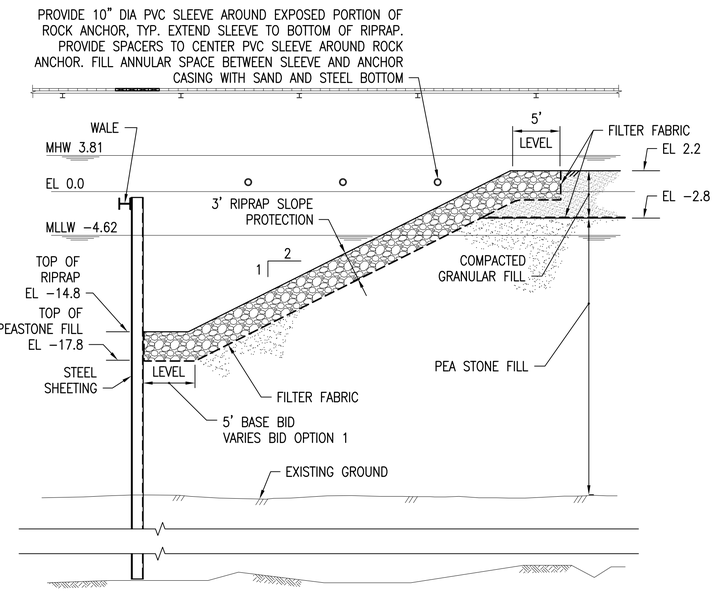

SECTION - RIPRAP SLOPE PROTECTION A1

SCALE: 1/8" = 1'-0" C-107

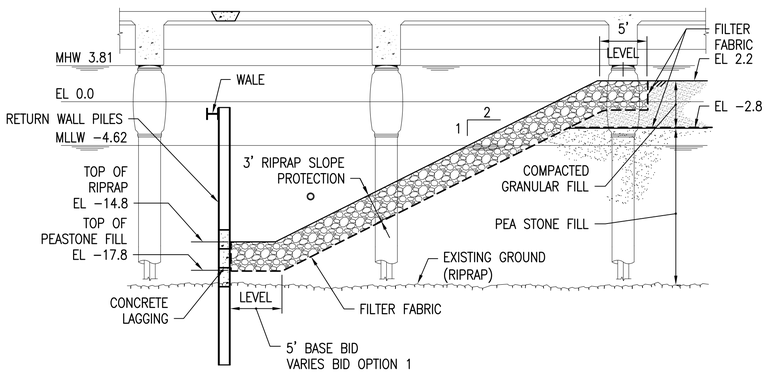

SECTION - RIPRAP SLOPE PROTECTION A2

SCALE: 1/8" = 1'-0" C-107

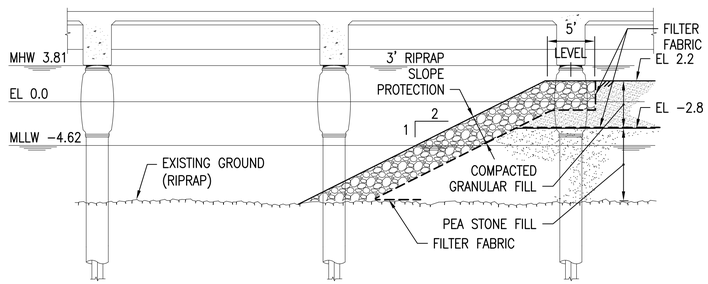

SECTION - RIPRAP SLOPE PROTECTION A4

SCALE: 1/8" = 1'-0" C-107

1/8"=1'-0" 4' 0 4' 8' 12' 16'

GRAPHIC SCALE

1"=10' 10' 0 10' 20'

CHECK GRAPHIC SCALE BEFORE USING

APPR	DATE	DESCRIPTION	MJS	STM

NAVFAC

DAVID P. ANDERSON CIVIL No. 37119 COMMONWEALTH OF MASSACHUSETTS 5/19/16 SEAL

MNFST A JOINT VENTURE A/E INFO

APPROVED David W. Hemyfield FOR COMMANDER NAVFAC

ACTIVITY: PER DOCUMENT FROM PNSY CODE 980, KITTERY ME

SATISFACTORY TO DATE: 05/09/16

DES DWH | DRW CHG | CHK DPA

PM/DM: NATHAN LIBBY

BRANCH MANAGER: NATHAN MAHER

FEAD/PM&E: AMIN BAHROUR

FIRE PROTECTION: N/A

DEPARTMENT OF THE NAVY
NAVAL FACILITIES ENGINEERING COMMAND
PUBLIC WORKS DEPARTMENT - MAINE
PORTSMOUTH NAVAL SHIPYARD

NAVAL FACILITIES ENGINEERING COMMAND – MID-ATLANTIC
NAVAL SHIPYARD – PORTSMOUTH, NH
KITTERY, MAINE

STRUCTURAL REPAIRS AT BERTHS 11A, 11B AND 11C

FILL PART PLANS

EPROJECT NO.: 1356489

CONSTR. CONTR. NO. N40085-XX-C-XXXX

NAVFAC DRAWING NO. 12716047

SHEET 51 OF 144

C-107 | FP2-16-687

DRAWFORM REVISION: 10 OCTOBER 2014

FILE NAME: S:\1794\Active\179410203\VTP-104A PNSY Lifting Study\TP-104A PNSY Lifting Study\02 CAD\05 Civil\FP2-16-687.dwg LAYOUT NAME: FILL PART PLANS PLOTTED: Friday, May 13, 2016 - 2:37pm USER: cgoodridge

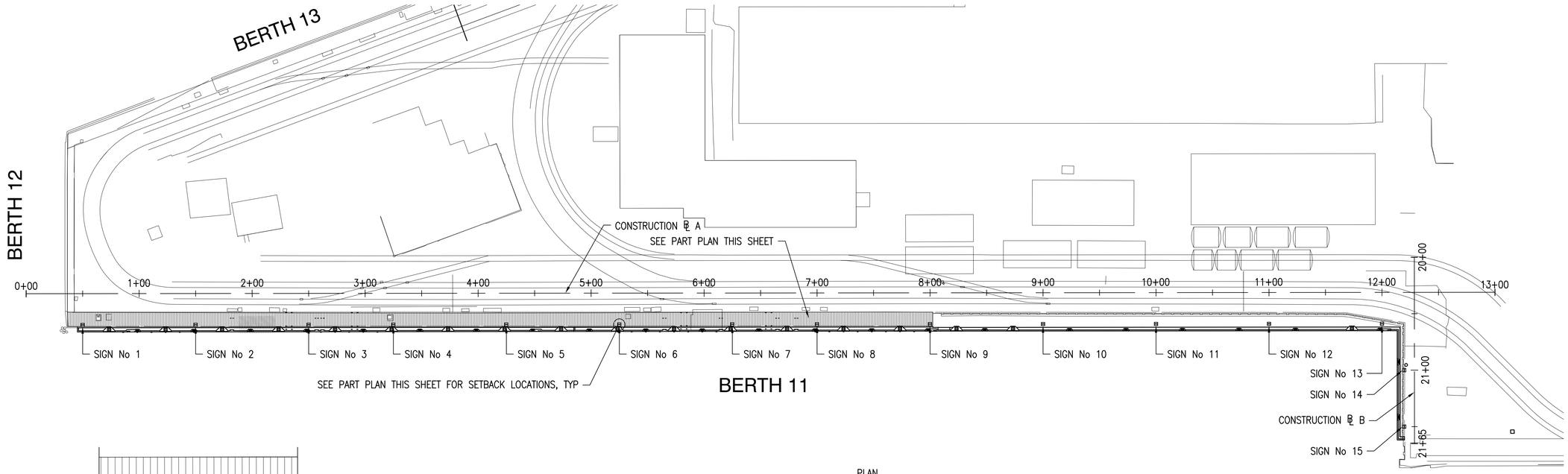

SIGNAGE PLAN

SCALE: 1"=50'

PLAN NORTH

DRYDOCK No 1

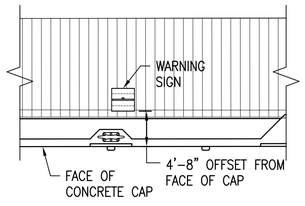

PART PLAN

SCALE: 1"=10'

PLAN NORTH

LETTERS	SPACE
–	2.625"
4.75" (RED)	–
–	1.875"
2.5"	–
–	0.875"
2.5"	–
–	1.875"
2.5"	–
–	0.875"
2.5"	–
–	1.875"
3" (RED)	–
–	1"
3" (RED)	–
–	2"
0.625"	–
–	2.625"

COLORS:

BACKGROUND: WHITE
TEXT: BLACK (UNO)

DETAIL - WARNING SIGN A1

SCALE: 3/4" = 1'-0"

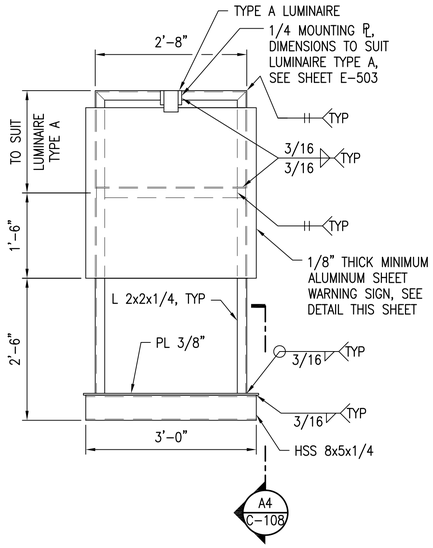

DETAIL - WARNING SIGN FRAME A2

SCALE: 3/4" = 1'-0"

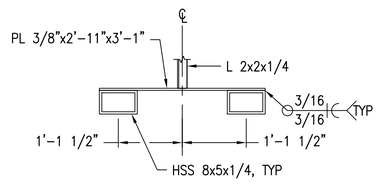

SECTION - SIGN BASE A4

SCALE: 3/4" = 1'-0" C-108

SIGNAGE LOCATION

SIGN No	BASELINE	STATION
1	BASELINE A	0+50
2	BASELINE A	1+50
3	BASELINE A	2+50
4	BASELINE A	3+25
5	BASELINE A	4+25
6	BASELINE A	5+25
7	BASELINE A	6+25
8	BASELINE A	7+00
9	BASELINE A	8+00
10	BASELINE A	9+00
11	BASELINE A	10+00
12	BASELINE A	11+00
13	BASELINE A	12+00
14	BASELINE B	21+00
15	BASELINE B	21+50

NOTES:

1. SIGN FRAME SHALL BE HOT-DIP GALVANIZED AFTER FABRICATION.
2. SIGN SHALL BE MECHANICALLY FASTENED USING STAINLESS STEEL CLIPS OR SCREWS AS RECOMMENDED BY SIGN MANUFACTURER. PROVIDE RUBBER SPACERS BETWEEN SIGN AND SIGN FRAME.
3. EXISTING WARNING SIGNS SHALL BE MAINTAINED THROUGHOUT CONSTRUCTION UNTIL PROPOSED SIGNS HAVE BEEN INSTALLED AND ARE OPERATIONAL. PROPOSED SIGNS SHALL BE MAINTAINED FOR THE REMAINDER OF CONSTRUCTION.

GRAPHIC SCALE

1"=50' — 50' 0 50' 100'

CHECK GRAPHIC SCALE BEFORE USING

APPR	DATE	DESCRIPTION	STM

NAVFAC

COMMONWEALTH OF MASSACHUSETTS
DAVID P. ANDERSON
CIVIL
No. 37119
REGISTERED PROFESSIONAL ENGINEER
5/19/16
SEAL

MNFST
A JOINT VENTURE
A/E INFO

APPROVED (Signature)
David W. Trumfield
FOR COMMANDER NAVFAC

ACTIVITY:
PER DOCUMENT FROM PNSY
CODE 980, KITTERY ME

SATISFACTORY TO DATE: 05/09/16

DES: DJM | DRW: FLC | CHK: DJM

PM/DM: NATHAN LIBBY
BRANCH MANAGER: NATHAN MAHER
FEAD/PM&E: AMIN BAHROUR
FIRE PROTECTION: N/A

DEPARTMENT OF THE NAVY
NAVAL FACILITIES ENGINEERING COMMAND
PUBLIC WORKS DEPARTMENT - MAINE
PORTSMOUTH NAVAL SHIPYARD

NAVAL FACILITIES ENGINEERING COMMAND ~ MID-ATLANTIC
NAVAL SHIPYARD - PORTSMOUTH, NH

KITTERY, MAINE

STRUCTURAL REPAIRS AT BERTHS 11A, 11B AND 11C

SIGNAGE PLAN

EPROJECT NO.: 1356489

CONSTR. CONTR. NO.
N40085-XX-C-XXXX

NAVFAC DRAWING NO.
12716248

SHEET 52 OF 144

C-108 | FP2-16-688

DRAWFORM REVISION: 10 OCTOBER 2014

FILE NAME: S:\1794\Active\179410203\13-Lifting Study\TP-104A PNSY Lifting Study\02 CADD\05 Civil\FP2-16-688.dwg LAYOUT NAME: SIGNAGE PLAN PLOTTED: Friday, May 13, 2016 - 2:38pm USER: cgoodridge

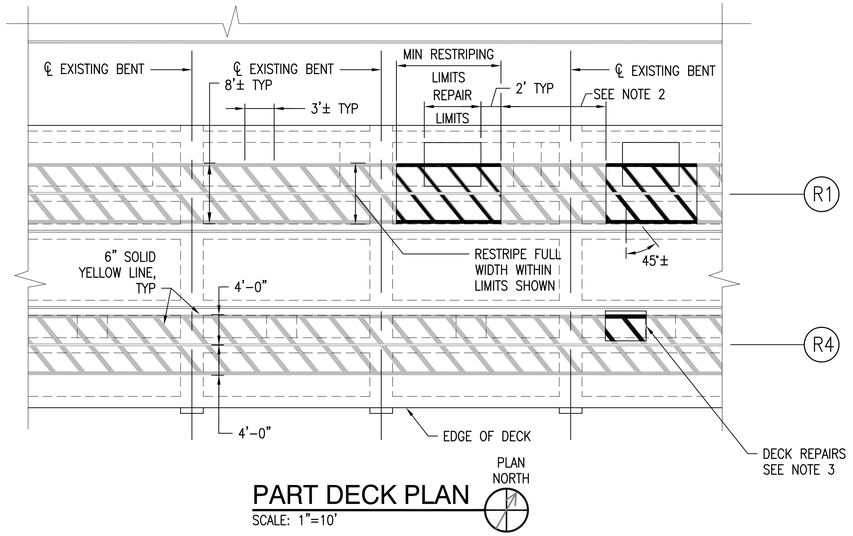

PART DECK PLAN

SCALE: 1"=10'

NOTES:

1. CONTRACTOR SHALL PROVIDE STRIPING IN DISTURBED AREAS. STRIPING TO MATCH EXISTING.
2. IF SPACE BETWEEN RESTRIPED LIMITS IS LESS THAN 4'-0" THE AREA BETWEEN REPAIR SHALL BE RESTRIPED.
3. AT DECK REPAIR LOCATIONS REMOVE STRIPING TO MIN 6" BEYOND REPAIR LIMITS AND PROVIDE STRIPING TO MATCH EXISTING.

GRAPHIC SCALE

1"=10'

10' 0 10' 20'

CHECK GRAPHIC SCALE BEFORE USING

APPR	DATE	DESCRIPTION	MJS

NAVFAC

COMMONWEALTH OF MASSACHUSETTS
DAVID P. ANDERSON
CIVIL
No. 37119
REGISTERED PROFESSIONAL ENGINEER
5/9/16
SEAL

MN FST
A JOINT VENTURE
A/E INFO

APPROVED
Commander
David W. Grunfeld
FOR COMMANDER NAVFAC

ACTIVITY:
PER DOCUMENT FROM PNSY
CODE 980, KITTERY ME

SATISFACTORY TO DATE: 05/09/16

DES: DJM | DRW: CHG | CHK: DJM

PM/DM: NATHAN LIBBY

BRANCH MANAGER: NATHAN MAHER

LEAD/PM&E: AMIN BAHROUR

FIRE PROTECTION: N/A

DEPARTMENT OF THE NAVY
NAVAL FACILITIES ENGINEERING COMMAND
PUBLIC WORKS DEPARTMENT - MAINE
PORTSMOUTH NAVAL SHIPYARD

NAVAL FACILITIES ENGINEERING COMMAND ~ MID-ATLANTIC
NAVAL SHIPYARD - PORTSMOUTH, NH

KITTERY, MAINE

STRUCTURAL REPAIRS AT BERTHS 11A, 11B AND 11C

STRIPING PLAN

EPROJECT NO.: 1356489

CONSTR. CONTR. NO.
N40085-XX-C-XXXX

NAVFAC DRAWING NO.
12716049

SHEET 53 OF 144

C-109 | FP2-16-689

DRAWFORM REVISION: 10 OCTOBER 2014

FILE NAME: S:\1794\Active\1794102203\YP-104A PNSY Lifting Study\YP-104A PNSY Lifting Study\02 CADD\05 Civil\FP2-16-689.dwg LAYOUT NAME: STRIPING PLAN PLOTTED: Friday, May 13, 2016 - 2:38pm USER: cgoodridge

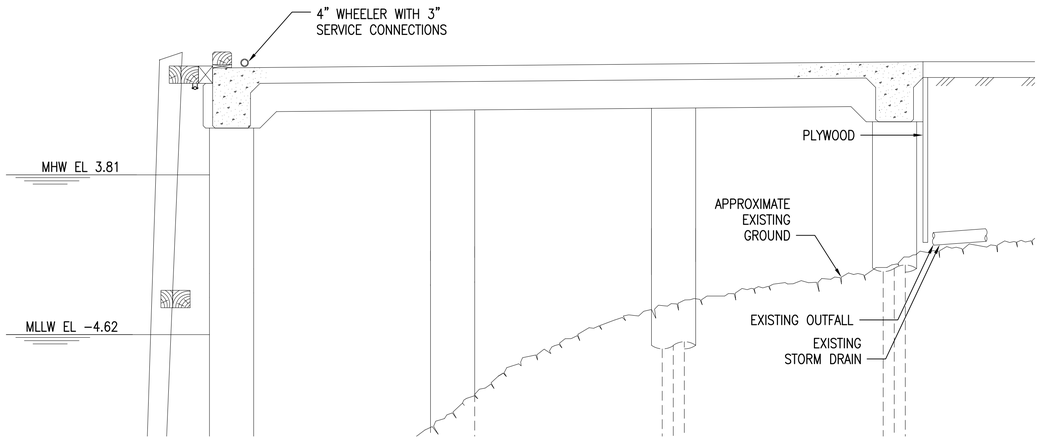

EXISTING UTILITY SECTION AT BERTH 11 (EAST END)

SCALE: 1/4" = 1'-0" — C1

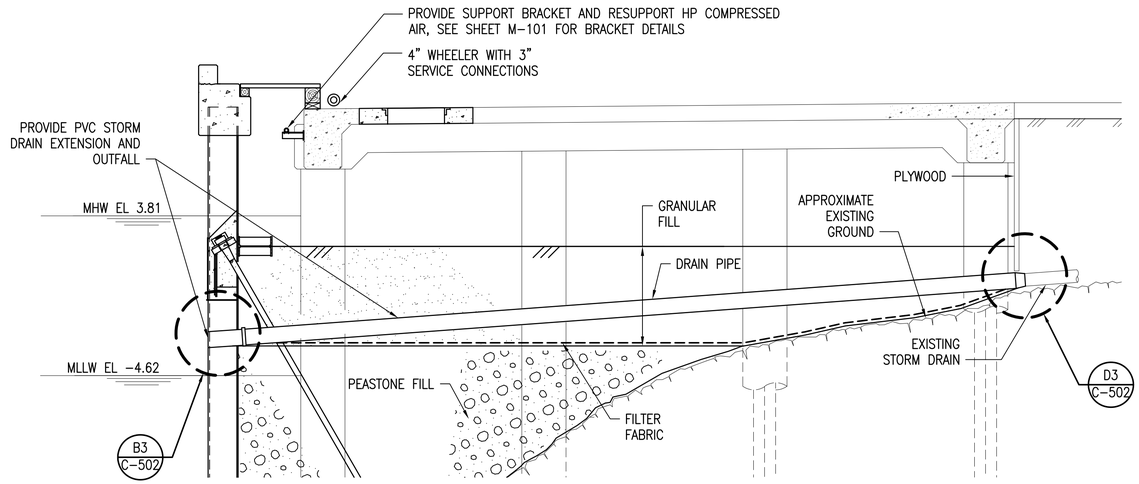

UTILITY SECTION AT BERTH 11 (EAST END)

SCALE: 1/4" = 1'-0" — C-104 C3

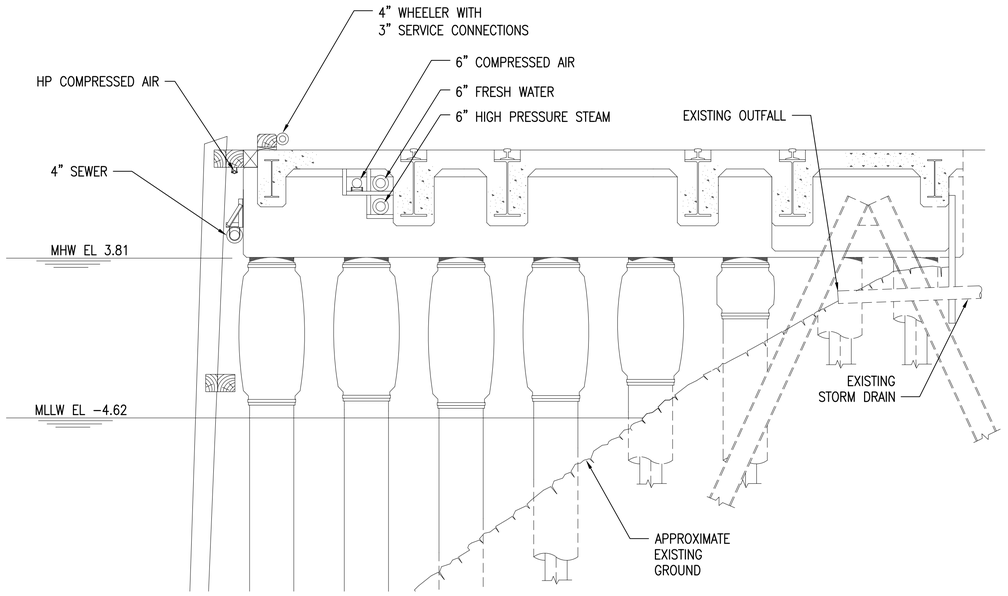

EXISTING UTILITY SECTION AT BERTH 11A

SCALE: 1/4" = 1'-0" — A1

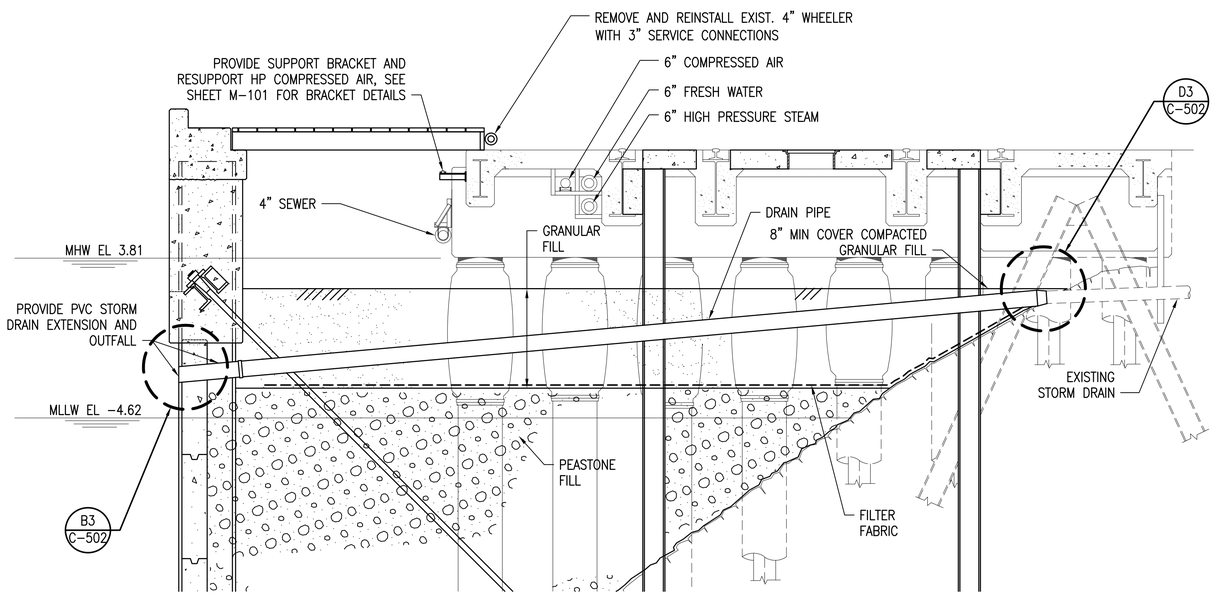

PROPOSED UTILITY SECTION AT BERTH 11A

SCALE: 1/4" = 1'-0" — C-104 A3

GRAPHIC SCALE

1/4"=1'-0" — 4' 0 4' 8'

CHECK GRAPHIC SCALE BEFORE USING

APPR	DATE	DESCRIPTION	STM

NAVFAC

COMMONWEALTH OF MASSACHUSETTS — DAVID P. ANDERSON — CIVIL — No. 37119A — REGISTERED PROFESSIONAL ENGINEER — 3/7/16 — SEAL

MNFST — A JOINT VENTURE — A/E INFO

APPROVED: David W. Thurfield — FOR COMMANDER NAVFAC

ACTIVITY: PER DOCUMENT FROM PNSY CODE 980, KITTERY ME

SATISFACTORY TO — DATE: 05/09/16

DES: KAK | DRW: CHG | CHK: DPA

PM/DM: NATHAN LIBBY

BRANCH MANAGER: NATHAN MAHER

FEAD/PM&E: AMIN BAHROUR

EIRE PROTECTION: N/A

DEPARTMENT OF THE NAVY
NAVAL FACILITIES ENGINEERING COMMAND
PUBLIC WORKS DEPARTMENT - MAINE
PORTSMOUTH NAVAL SHIPYARD

NAVAL FACILITIES ENGINEERING COMMAND ~ MID-ATLANTIC
NAVAL SHIPYARD ~ PORTSMOUTH, NH
KITTERY, MAINE

STRUCTURAL REPAIRS AT BERTHS 11A, 11B AND 11C

UTILITY SECTIONS - SHEET 1 OF 2

EPROJECT NO.: 1356489

CONSTR. CONTR. NO.: N40085-XX-C-XXXX

NAVFAC DRAWING NO.: 12716050

SHEET 54 OF 144

C-301 | FP2-16-690

DRAWFORM REVISION: 10 OCTOBER 2014

FILE NAME: S:\1794\Active\179410203\TP-104A PNSY Lifting Study\TP-104A PNSY Lifting Study\02 CAD\05 Civil\FP2-16-691.dwg LAYOUT NAME: UTILITY SECTIONS - SHEET 1 OF 2 PLOTTED: Friday, May 13, 2016 - 2:39pm USER: cpodridge

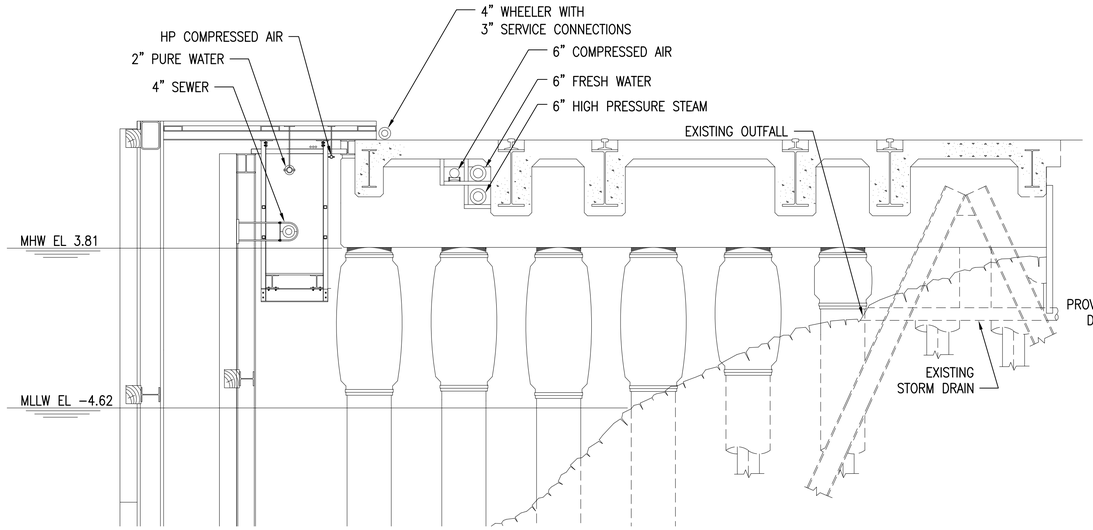

EXISTING UTILITY SECTION AT BERTH 11B

SCALE: 1/4" = 1'-0"

C1

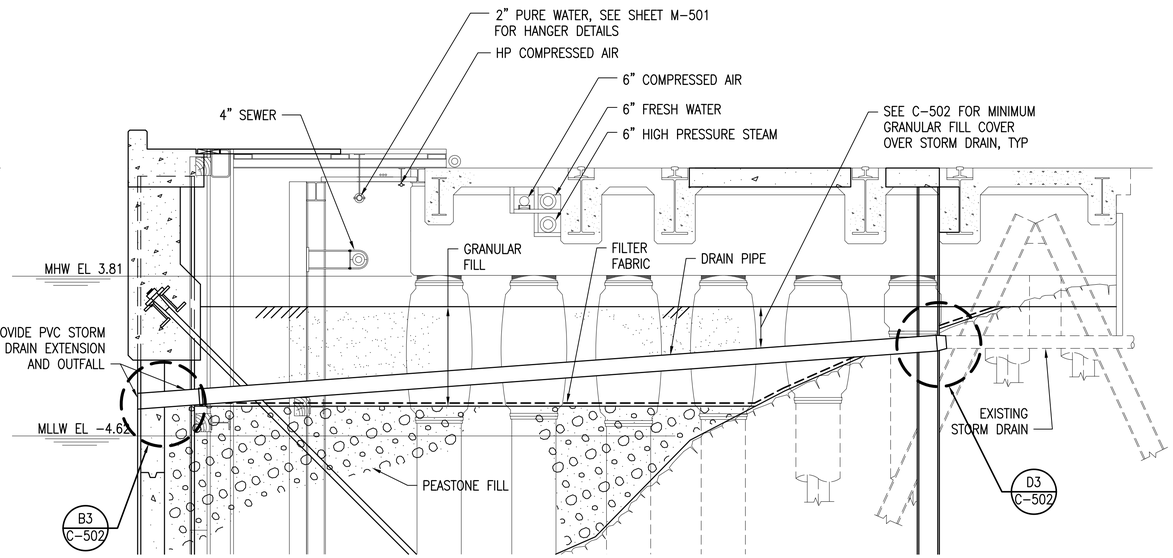

PROPOSED UTILITY SECTION AT BERTH 11B

SCALE: 1/4" = 1'-0"

C-105 C3

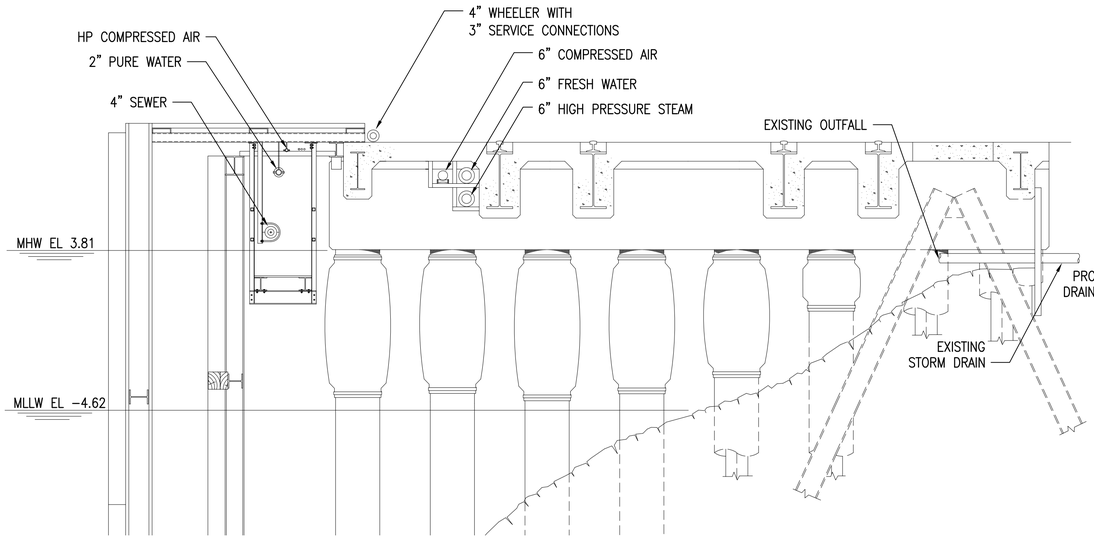

EXISTING UTILITY SECTION AT BERTH 11C

SCALE: 1/4" = 1'-0"

A1

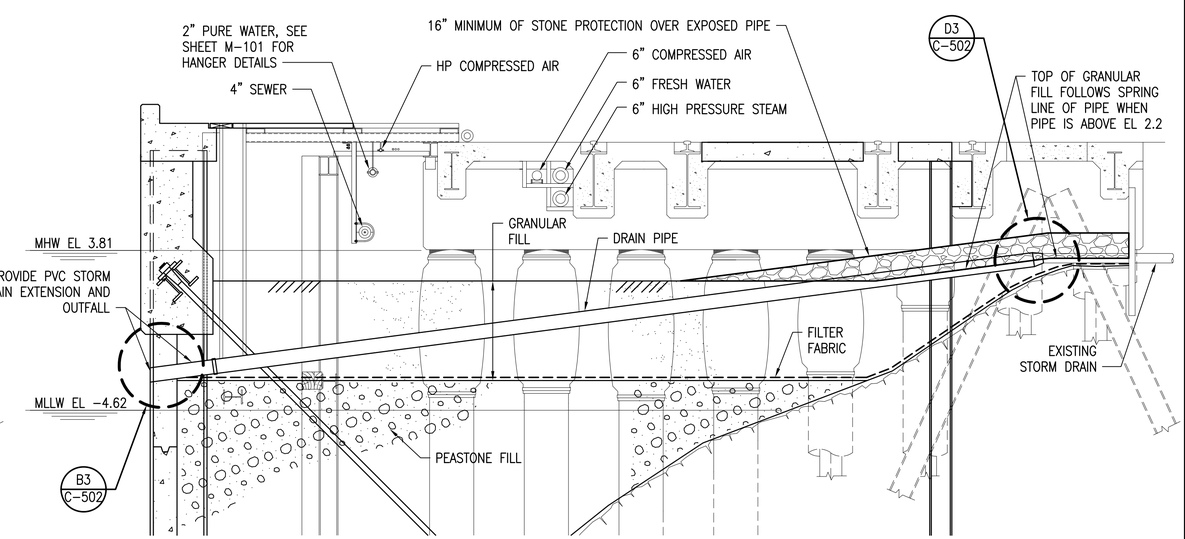

PROPOSED UTILITY SECTION AT BERTH 11C

SCALE: 1/4" = 1'-0"

C-105 A3

GRAPHIC SCALE

1/4"=1'-0"

4' 0 4' 8'

CHECK GRAPHIC SCALE BEFORE USING

APPR	DATE	DESCRIPTION	SYM

NAVFAC

COMMONWEALTH OF MASSACHUSETTS
DAVID P. ANDERSON
CIVIL
No. 37119
REGISTERED PROFESSIONAL ENGINEER
5/19/16
SEAL

MN FST
A JOINT VENTURE
A/E INFO

APPROVED
David W. Shufield
FOR COMMANDER NAVFAC

ACTIVITY:
PER DOCUMENT FROM PNSY
CODE 980, KITTERY ME

SATISFACTORY TO DATE: 05/09/16

DES	KAK	DRW	CHG	CHK	DPA

PM/DM: NATHAN LIBBY
BRANCH MANAGER: NATHAN MAHER
FEAD/PM&E: AMIN BAHROUR
FIRE PROTECTION: N/A

DEPARTMENT OF THE NAVY
NAVAL FACILITIES ENGINEERING COMMAND
PUBLIC WORKS DEPARTMENT - MAINE
PORTSMOUTH NAVAL SHIPYARD

NAVAL FACILITIES ENGINEERING COMMAND – MID-ATLANTIC
NAVAL SHIPYARD – PORTSMOUTH, NH
KITTERY, MAINE

STRUCTURAL REPAIRS AT BERTHS 11A, 11B AND 11C

UTILITY SECTIONS – SHEET 2 OF 2

EPROJECT NO.: 1356489

CONSTR. CONTR. NO.
N40085-XX-C-XXXX

NAVFAC DRAWING NO.
12716051

SHEET 55 OF 144

C-302 | FP2-16-691

DRAWFORM REVISION: 10 OCTOBER 2014

FILE NAME: S:\1794\Active\179410203\V1\TP-104A PNSY Lifting Study\TP-104A PNSY Lifting Study\02 CAD\05 Civil\FP2-16-691.dwg LAYOUT NAME: UTILITY SECTIONS - SHEET 2 OF 2 PLOTTED: Friday, May 13, 2016 - 2:39pm USER: cpodridge

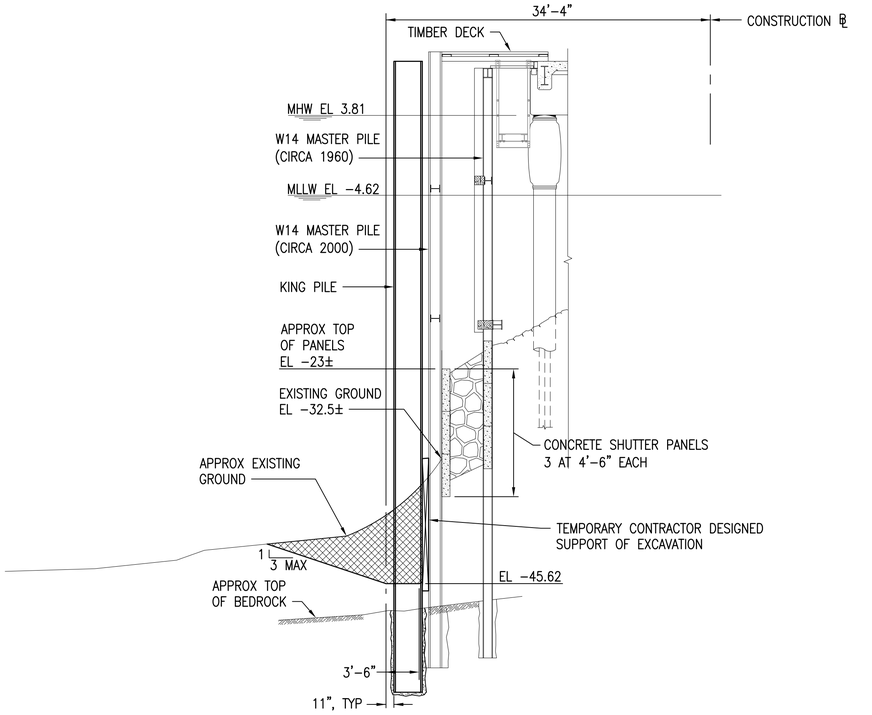

STA 0+48 DREDGE SECTION - BERTH 11C (C1)

SCALE: 1/8" = 1'-0" C-102

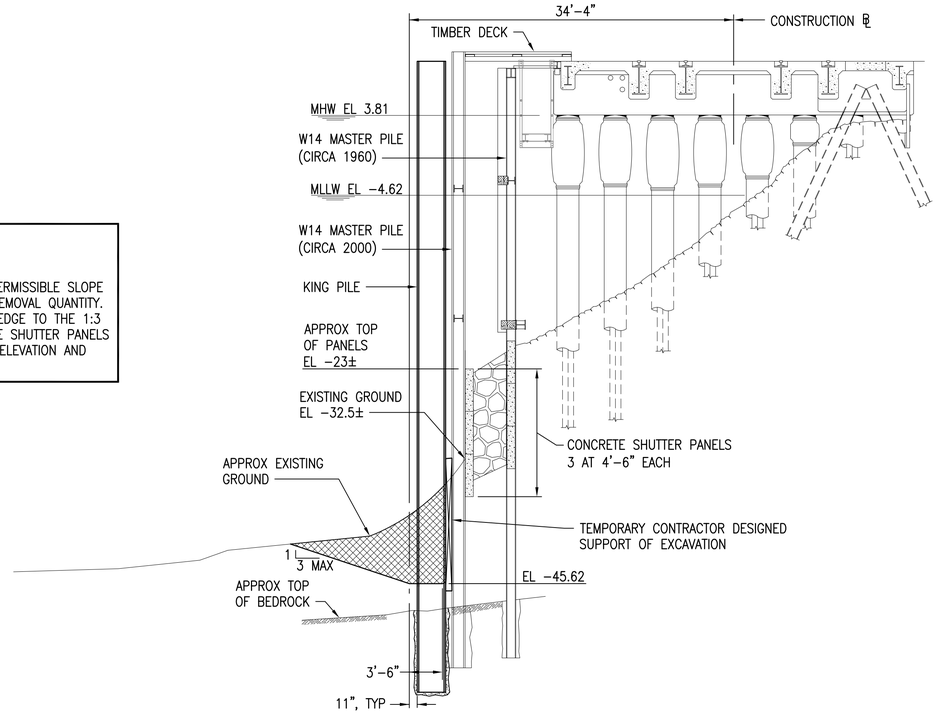

STA 1+00 DREDGE SECTION - BERTH 11C (C3)

SCALE: 1/8" = 1'-0" C-102

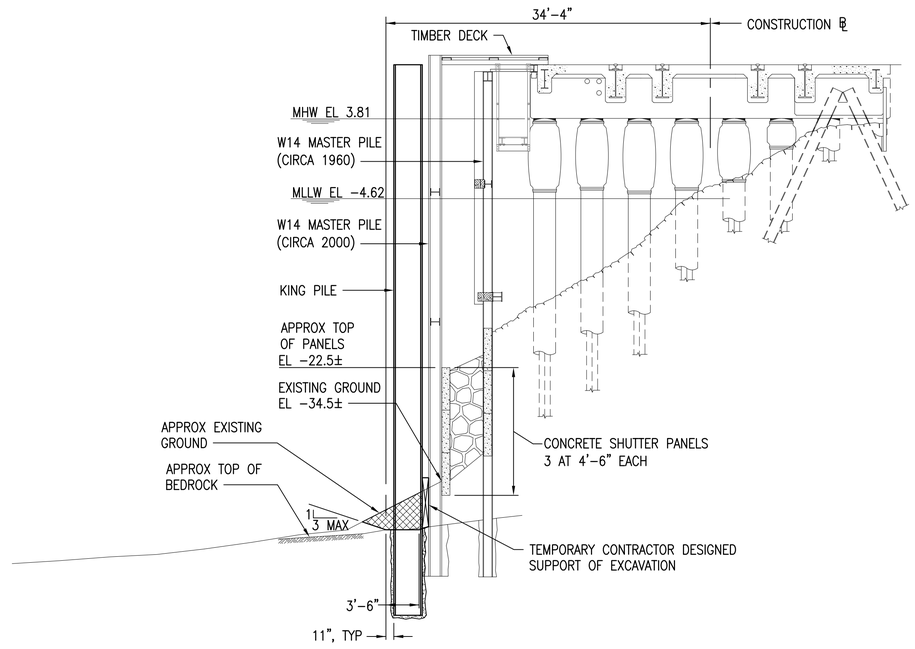

STA 2+00 DREDGE SECTION - BERTH 11C (A1)

SCALE: 1/8" = 1'-0" C-102

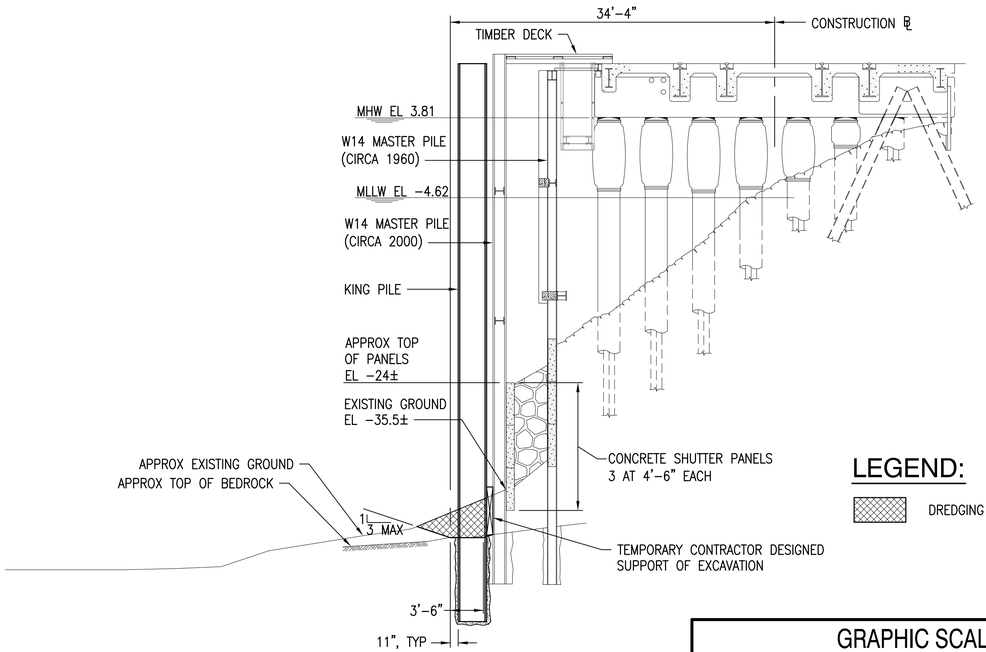

STA 3+00 DREDGE SECTION - BERTH 11C (A3)

SCALE: 1/8" = 1'-0" C-102

NOTE:

DREDGE SLOPE SHOWN IS MAXIMUM PERMISSIBLE SLOPE AND BASIS OF PERMITTED SEDIMENT REMOVAL QUANTITY. CONTRACTOR IS NOT REQUIRED TO DREDGE TO THE 1:3 SLOPE LIMITS SHOWN AS LONG AS THE SHUTTER PANELS CAN BE INSTALLED TO THE REQUIRED ELEVATION AND SEALED AT THE BASE.

GRAPHIC SCALE

1/8"=1'-0" 4' 0 4' 8' 12' 16'

CHECK GRAPHIC SCALE BEFORE USING

APPR | DATE | DESCRIPTION | STM

NAVFAC

COMMONWEALTH OF MASSACHUSETTS DAVID P. ANDERSON CIVIL No. 37119A REGISTERED PROFESSIONAL ENGINEER 3/17/16 SEAL

MN FST A JOINT VENTURE A/E INFO

APPROVED: David W. Thurnfield FOR COMMANDER NAVFAC

ACTIVITY: PER DOCUMENT FROM PNSY CODE 980, KITTERY ME

SATISFACTORY TO DATE: 05/09/16

DES: DPA | DRW: HBF | CHK: DWH

PM/DM: NATHAN LIBBY

BRANCH MANAGER: NATHAN MAHER

LEAD/PM&E: AMIN BAHROUR

FIRE PROTECTION: N/A

DEPARTMENT OF THE NAVY
NAVAL FACILITIES ENGINEERING COMMAND
PUBLIC WORKS DEPARTMENT - MAINE
PORTSMOUTH NAVAL SHIPYARD

NAVAL FACILITIES ENGINEERING COMMAND ~ MID-ATLANTIC
NAVAL SHIPYARD ~ PORTSMOUTH, NH
KITTERY, MAINE

STRUCTURAL REPAIRS AT BERTHS 11A, 11B AND 11C

DREDGING SECTIONS - SHEET 1 OF 4

EPROJECT NO.: 1356489

CONSTR. CONTR. NO. N40085-XX-C-XXXX

NAVFAC DRAWING NO. 12716052

SHEET 56 OF 144

C-303 | FP2-16-692

DRAWFORM REVISION: 10 OCTOBER 2014

FILE NAME: S:\1794\Active\1794102031\TP-104A PNSY Lifting Study\TP-104A PNSY Lifting Study\02 CAD\05 Civil\FP2-16-693.dwg LAYOUT NAME: DREDGING SECTIONS - SHEET 1 OF 4 PLOTTED: Friday, May 13, 2016 - 2:39pm USER: cgoodridge

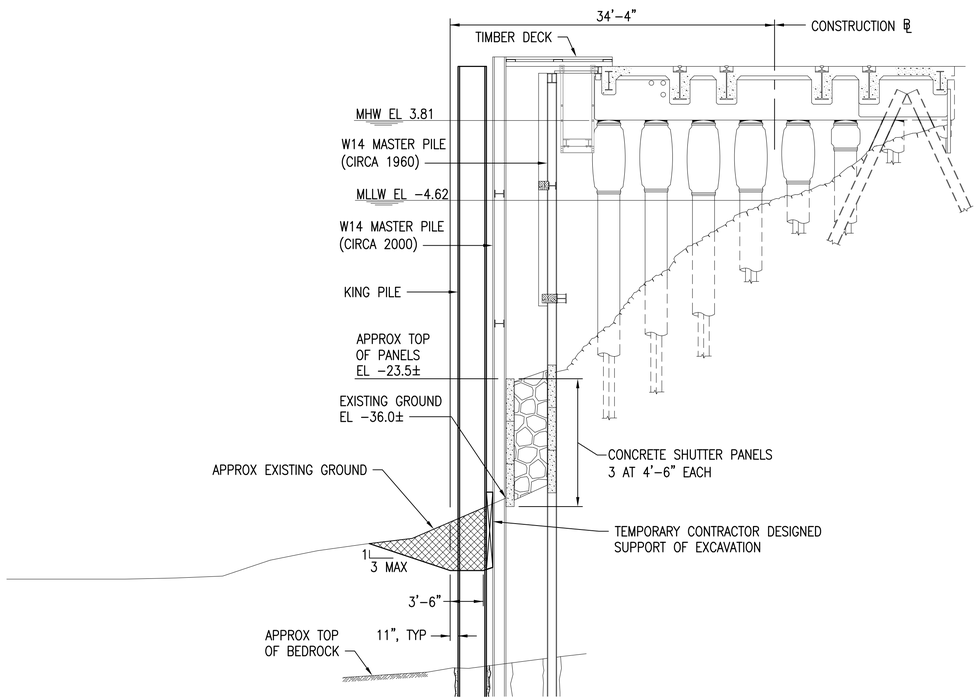

STA 4+00 DREDGE SECTION - BERTH 11B (C1)

SCALE: 1/8" = 1'-0" C-102

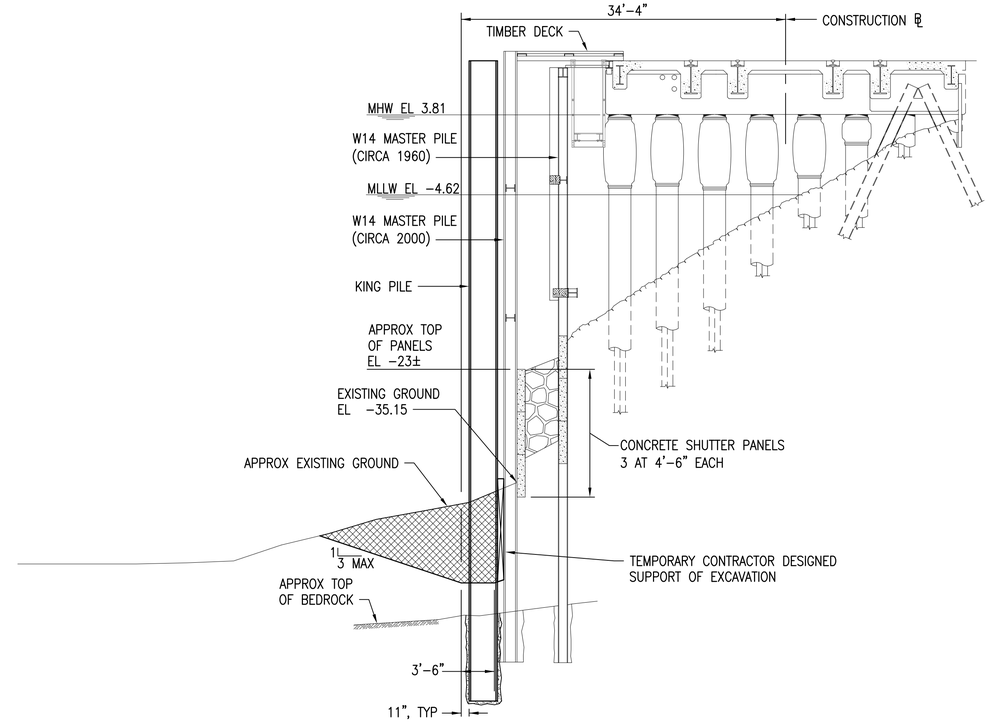

STA 5+00 DREDGE SECTION - BERTH 11B (C3)

SCALE: 1/8" = 1'-0" C-102

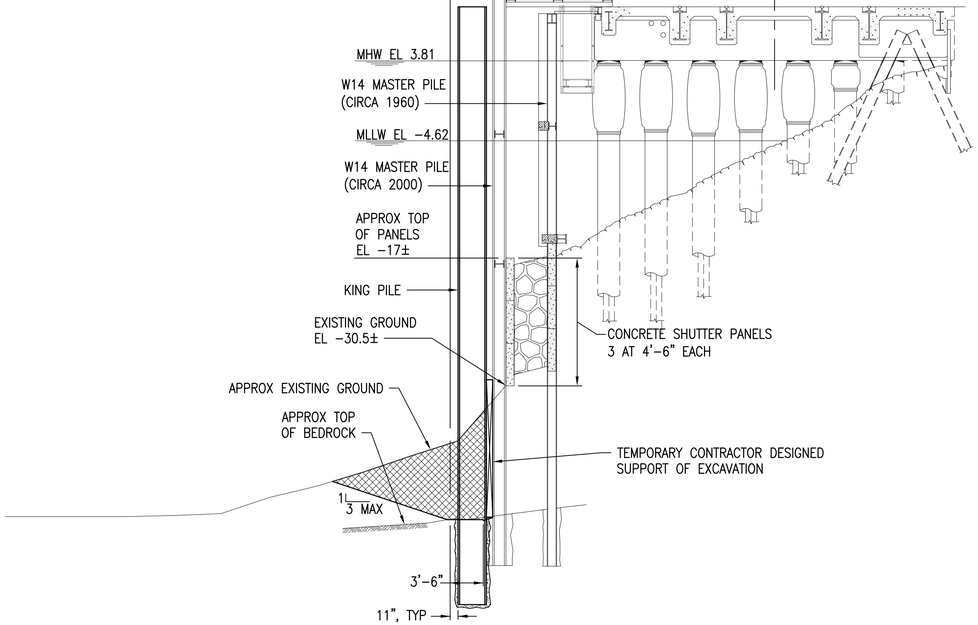

STA 6+00 DREDGE SECTION - BERTH 11B (A1)

SCALE: 1/8" = 1'-0" C-102

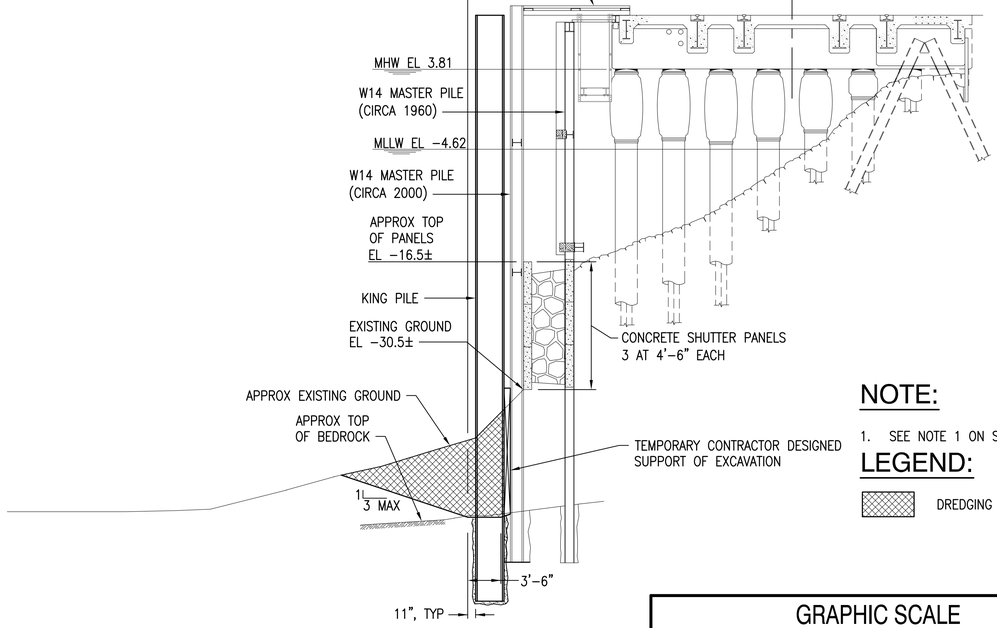

STA 7+00 DREDGE SECTION - BERTH 11B (A3)

SCALE: 1/8" = 1'-0" C-102

NOTE:

1. SEE NOTE 1 ON SHEET C-303.

LEGEND:

DREDGING

GRAPHIC SCALE

1/8"=1'-0" 4' 0 4' 8' 12' 16'

CHECK GRAPHIC SCALE BEFORE USING

APPR	DATE	DESCRIPTION	SYM

NAVFAC

DAVID P. ANDERSON CIVIL No. 37119A REGISTERED PROFESSIONAL ENGINEER COMMONWEALTH OF MASSACHUSETTS 5/19/16

SEAL

MNFST A JOINT VENTURE

A/E INFO

APPROVED: David W. Trumfield

FOR COMMANDER NAVFAC

ACTIVITY: PER DOCUMENT FROM PNSY CODE 980, KITTERY ME

SATISFACTORY TO DATE: 05/09/16

DES	DPA	DRW	HBF	CHK	DWH

PM/DM: NATHAN LIBBY

BRANCH MANAGER: NATHAN MAHER

FEAD/PM&E: AMIN BAHROUR

FIRE PROTECTION: N/A

DEPARTMENT OF THE NAVY
NAVAL FACILITIES ENGINEERING COMMAND
PUBLIC WORKS DEPARTMENT - MAINE
PORTSMOUTH NAVAL SHIPYARD

NAVAL FACILITIES ENGINEERING COMMAND – MID-ATLANTIC
NAVAL SHIPYARD - PORTSMOUTH, NH
KITTERY, MAINE

STRUCTURAL REPAIRS
AT BERTHS 11A, 11B AND 11C

DREDGING SECTIONS – SHEET 2 OF 4

EPROJECT NO.: 1356489

CONSTR. CONTR. NO.
N40085-XX-C-XXXX

NAVFAC DRAWING NO.
12716053

SHEET 57 OF 144

C-304 FP2-16-693

DRAWFORM REVISION: 10 OCTOBER 2014

FILE NAME: S:\1794\Active\179410203\V\TP-104A PNSY Lifting Study\TP-104A PNSY Lifting Study\02 CAD\05 Civil\FP2-16-693.dwg LAYOUT NAME: DREDGING SECTIONS – SHEET 2 OF 4 PLOTTED: Friday, May 13, 2016 – 2:39pm USER: cgoodridge

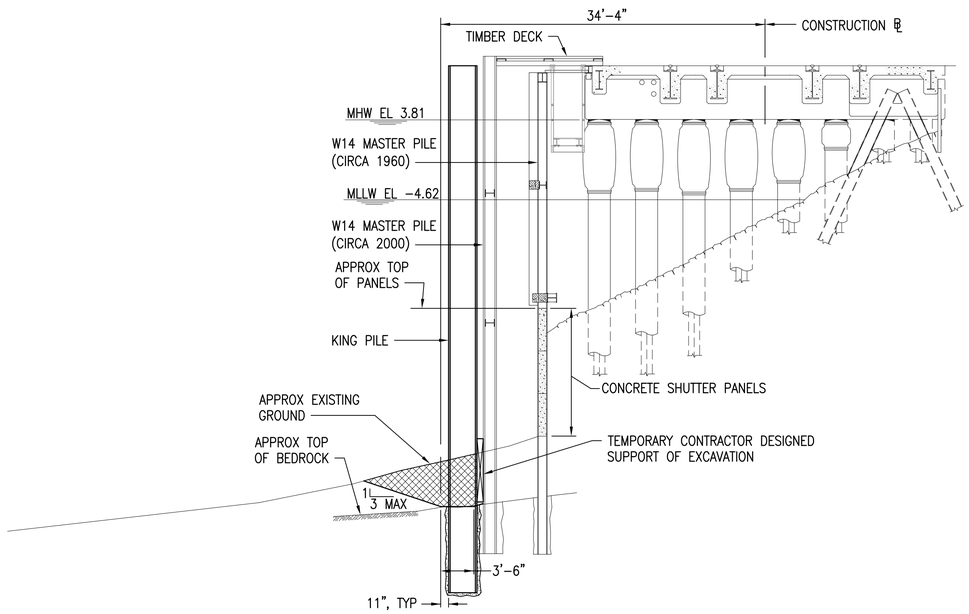

STA 8+00 DREDGE SECTION - BERTH 11A (C1)

SCALE: 1/8" = 1'-0" C-102

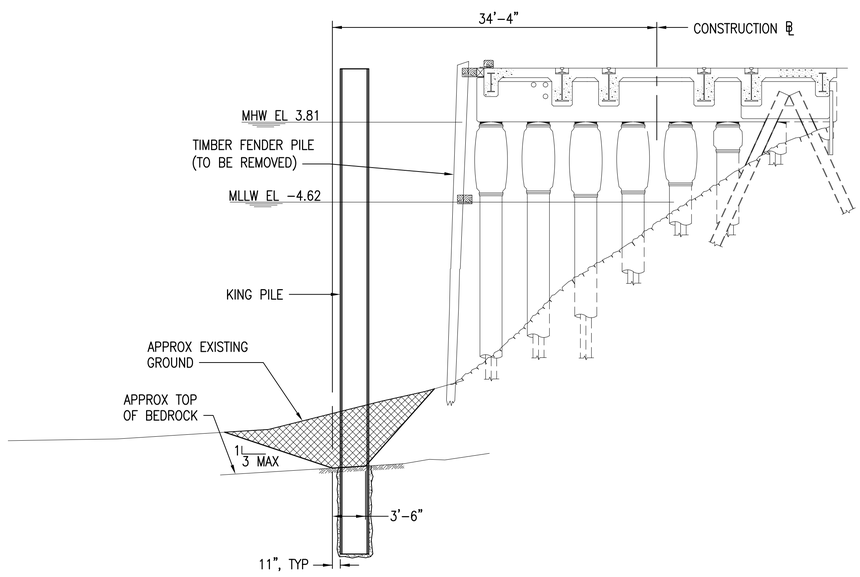

STA 9+00 DREDGE SECTION - BERTH 11A (C3)

SCALE: 1/8" = 1'-0" C-102

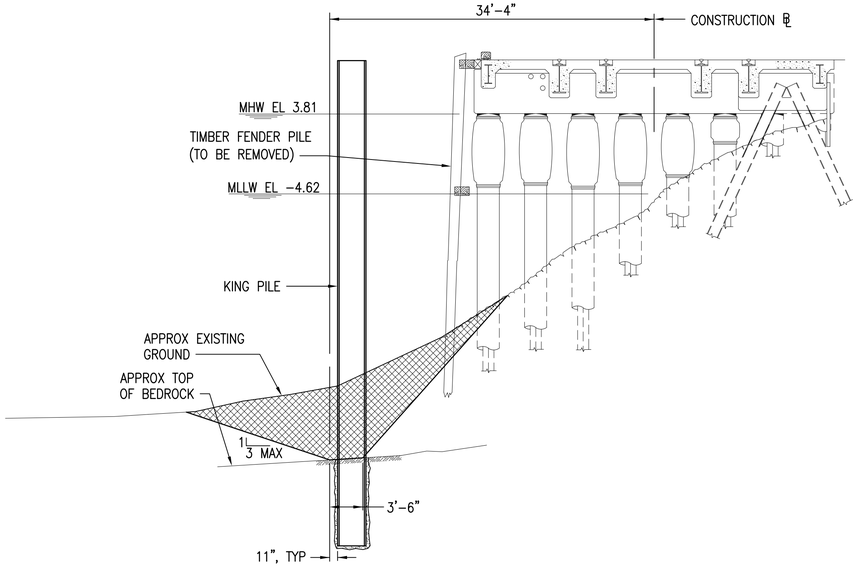

STA 10+00 DREDGE SECTION - BERTH 11A (A1)

SCALE: 1/8" = 1'-0" C-102

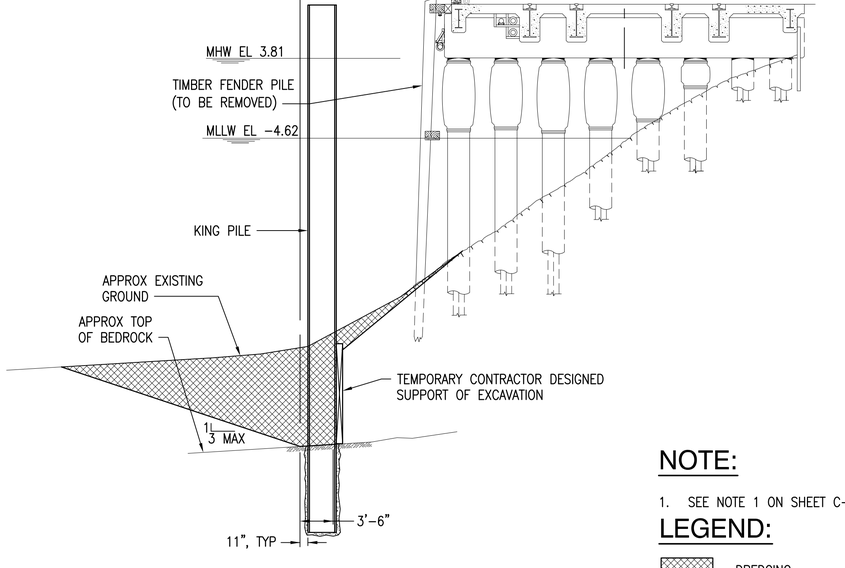

STA 11+00 DREDGE SECTION - BERTH 11A (A3)

SCALE: 1/8" = 1'-0" C-102

NOTE:

1. SEE NOTE 1 ON SHEET C-303.

LEGEND:

DREDGING

GRAPHIC SCALE

1/8"=1'-0" 4' 0 4' 8' 12' 16'

CHECK GRAPHIC SCALE BEFORE USING

APPR	DATE	DESCRIPTION	MJS	STM

NAVFAC

COMMONWEALTH OF MASSACHUSETTS
DAVID P. ANDERSON
CIVIL
No. 37119
REGISTERED PROFESSIONAL ENGINEER
5/19/16
SEAL

MNFST
A JOINT VENTURE
A/E INFO

APPROVED
David W. Grunfeld
FOR COMMANDER NAVFAC

ACTIVITY:
PER DOCUMENT FROM PNSY
CODE 980, KITTERY ME

SATISFACTORY TO DATE: 05/09/16

DES: DPA | DRW: HBF | CHK: DWH

PM/DM: NATHAN LIBBY

BRANCH MANAGER: NATHAN MAHER

FEAD/PM&E: AMIN BAHROUR

FIRE PROTECTION: N/A

DEPARTMENT OF THE NAVY
NAVAL FACILITIES ENGINEERING COMMAND
PUBLIC WORKS DEPARTMENT - MAINE
PORTSMOUTH NAVAL SHIPYARD

NAVAL FACILITIES ENGINEERING COMMAND ~ MID-ATLANTIC
NAVAL SHIPYARD - PORTSMOUTH, NH

KITTERY, MAINE

STRUCTURAL REPAIRS AT BERTHS 11A, 11B AND 11C

DREDGING SECTIONS - SHEET 3 OF 4

EPROJECT NO.: 1356489

CONSTR. CONTR. NO.
N40085-XX-C-XXXX

NAVFAC DRAWING NO.
12716054

SHEET 58 OF 144

C-305 | FP2-16-694

DRAWFORM REVISION: 10 OCTOBER 2014

FILE NAME: S:\1794\Active\179410203\YP-104A PNSY Lifting Study\YP-104A PNSY Lifting Study\02 CAD\05 Civil\FP2-16-693.dwg LAYOUT NAME: DREDGING SECTIONS - SHEET 3 OF 4 PLOTTED: Friday, May 13, 2016 - 2:39pm USER: cgoodridge

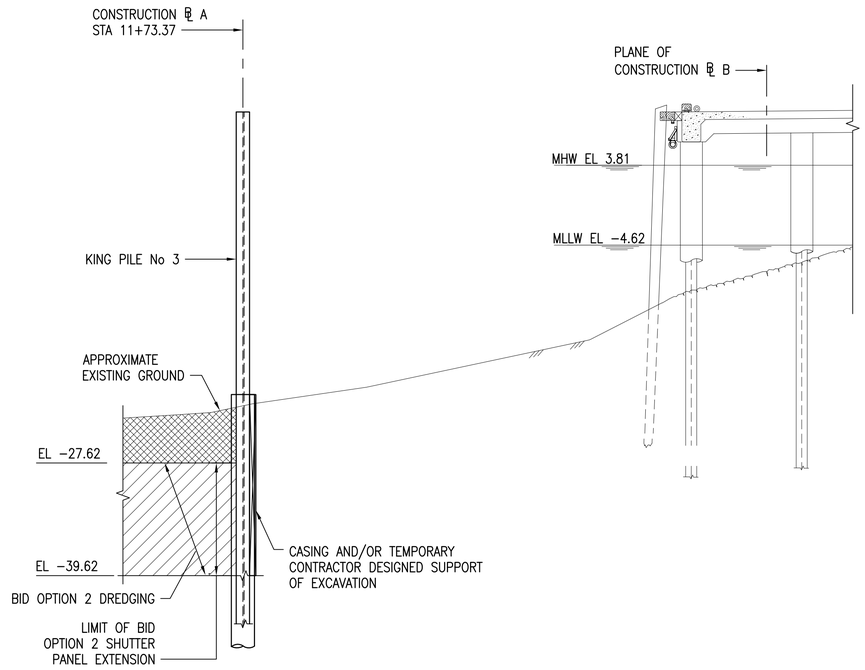

DREDGE SECTION - BERTH 11A - EAST END (C3)

SCALE: 1/8" = 1'-0" C-102
(STA 20+64 CONSTRUCTION ℄ B)

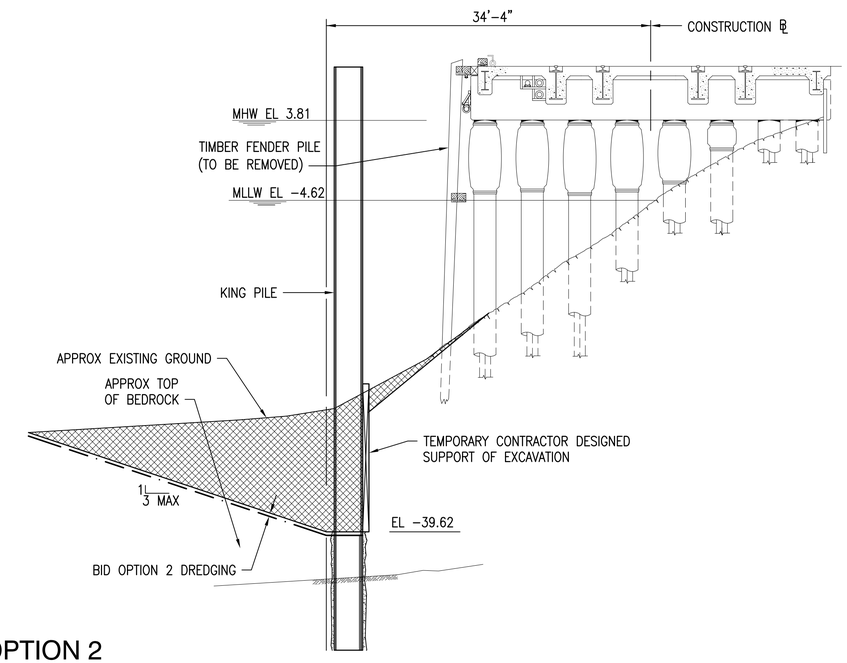

OPTION 2

STA 11+33.18 DREDGE SECTION - BERTH 11A (A1)

SCALE: 1/8" = 1'-0" C-102

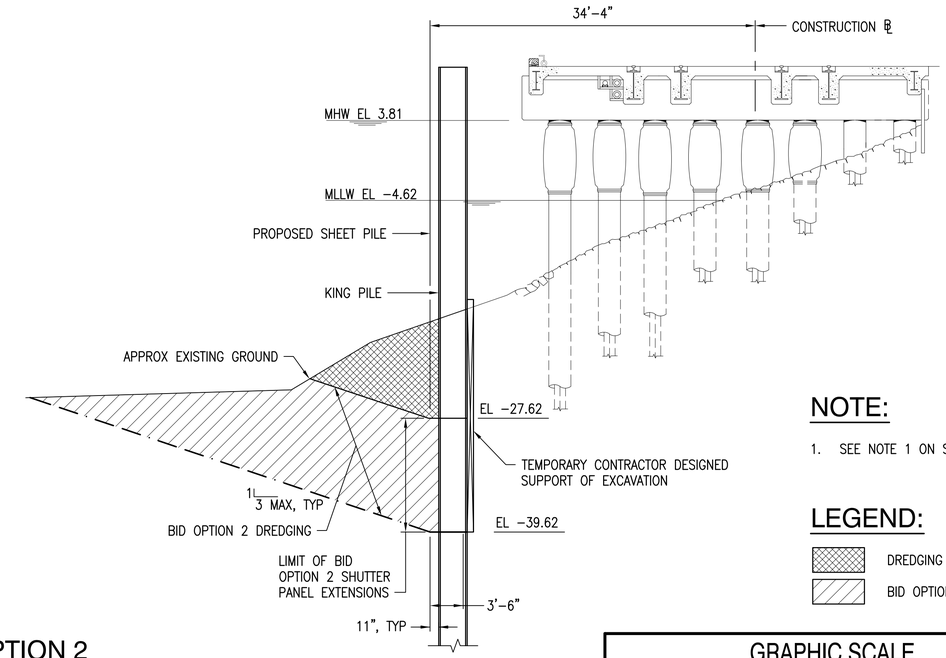

OPTION 2

STA 11+69.18 DREDGE SECTION - BERTH 11A (A3)

SCALE: 1/8" = 1'-0" C-102

NOTE:

1. SEE NOTE 1 ON SHEET C-303.

LEGEND:

DREDGING

BID OPTION DREDGING

GRAPHIC SCALE

1/8"=1'-0" 4' 0 4' 8' 12' 16'

CHECK GRAPHIC SCALE BEFORE USING

APPR	DATE	DESCRIPTION	SYM

NAVFAC

COMMONWEALTH OF MASSACHUSETTS
DAVID P. ANDERSON
CIVIL
No. 37119
REGISTERED PROFESSIONAL ENGINEER
5/19/16
SEAL

MN FST
A JOINT VENTURE
A/E INFO

APPROVED
David W. Trumfield
FOR COMMANDER NAVFAC

ACTIVITY:
PER DOCUMENT FROM PNSY
CODE 980, KITTERY ME

SATISFACTORY TO DATE: 05/09/16

DES	DPA	DRW	FLC	CHK	DWH

PM/DM: NATHAN LIBBY
BRANCH MANAGER: NATHAN MAHER
FEAD/PM&E: AMIN BAHROUR
FIRE PROTECTION: N/A

DEPARTMENT OF THE NAVY
NAVAL FACILITIES ENGINEERING COMMAND
PUBLIC WORKS DEPARTMENT - MAINE
PORTSMOUTH NAVAL SHIPYARD

NAVAL FACILITIES ENGINEERING COMMAND – MID-ATLANTIC
NAVAL SHIPYARD – PORTSMOUTH, NH

KITTERY, MAINE

STRUCTURAL REPAIRS AT BERTHS 11A, 11B AND 11C

DREDGING SECTIONS – SHEET 4 OF 4

EPROJECT NO.: 1356489
CONSTR. CONTR. NO.
N40085-XX-C-XXXX
NAVFAC DRAWING NO.
12716055
SHEET 59 OF 144

C-306 FP2-16-695

DRAWFORM REVISION: 10 OCTOBER 2014

FILE NAME: S:\1794\Active\179410203\1\TP-104A PNSY Lifting Study\TP-104A PNSY Lifting Study\02 CAD\05 Civil\FP2-16-693.dwg LAYOUT NAME: DREDGING SECTIONS – SHEET 4 OF 4 PLOTTED: Friday, May 13, 2016 – 2:39pm USER: cgoodridge

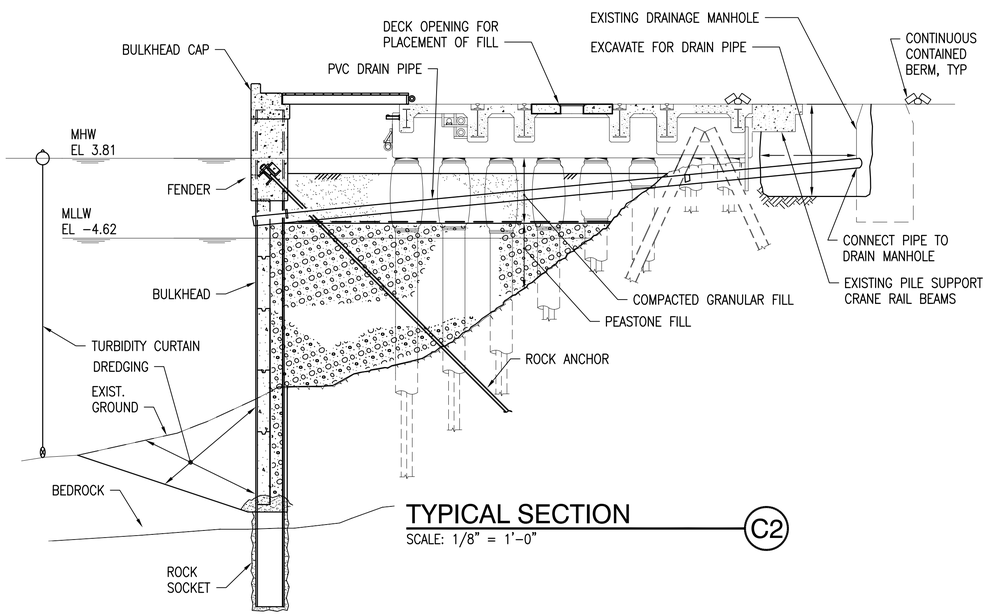

TYPICAL SECTION
SCALE: 1/8" = 1'-0" C2

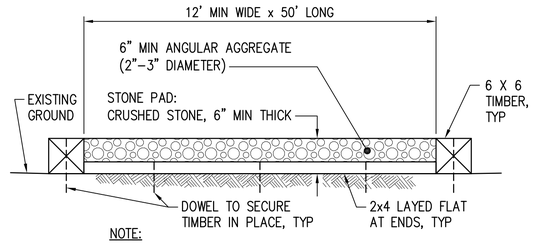

NOTE:

PLACE PAD ON EXISTING GROUND. SEE SHEET C-101 FOR REQUIREMENTS AND NOTES. FILL DOWEL HOLES WITH NON SHRINK GRANT UPON COMPLETION.

CRUSHED STONE CONSTRUCTION EXIT PAD DETAIL
SCALE: NOT TO SCALE C-501 B5

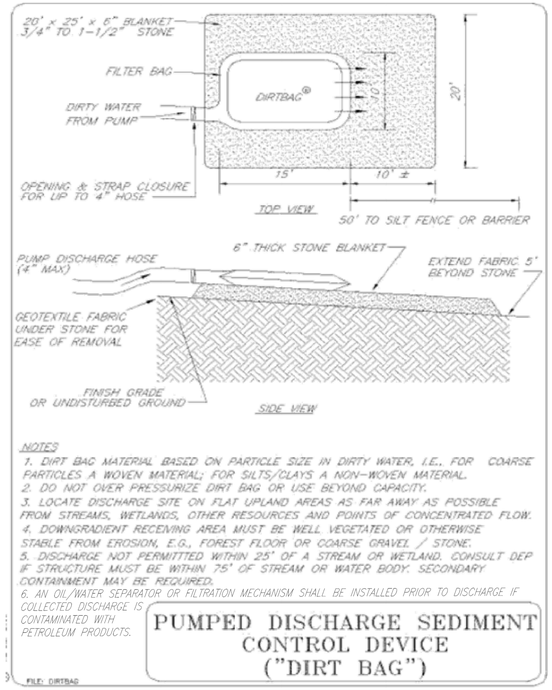

PUMPED DISCHARGE SEDIMENT CONTROL DEVICE
NOT TO SCALE C5

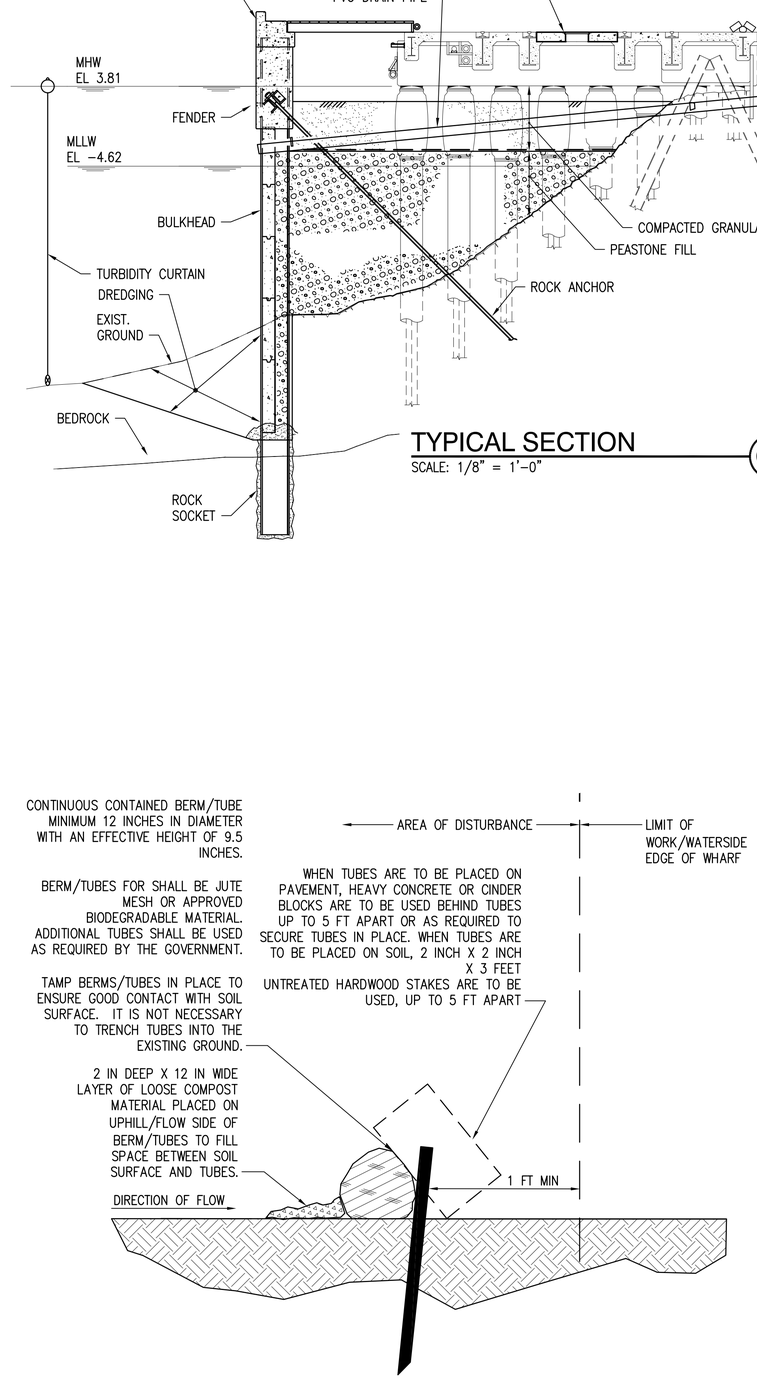

SECTION
SCALE: 1:1 C-501 A1

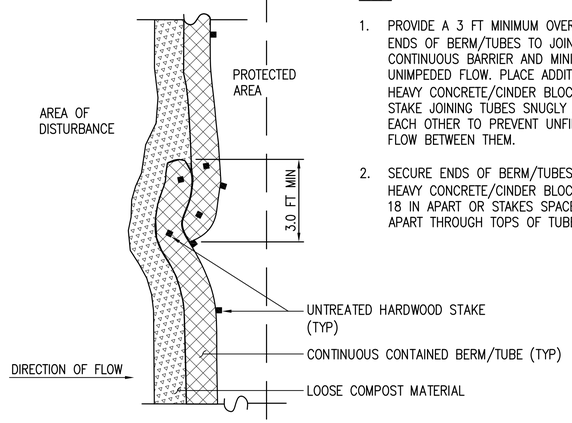

NOTE:

1. PROVIDE A 3 FT MINIMUM OVERLAP AT ENDS OF BERM/TUBES TO JOIN IN A CONTINUOUS BARRIER AND MINIMIZE UNIMPEDED FLOW. PLACE ADDITIONAL HEAVY CONCRETE/CINDER BLOCKS OR STAKE JOINING TUBES SNUGLY AGAINST EACH OTHER TO PREVENT UNFILTERED FLOW BETWEEN THEM.
2. SECURE ENDS OF BERM/TUBES WITH HEAVY CONCRETE/CINDER BLOCKS PLACED 18 IN APART OR STAKES SPACED 18 IN APART THROUGH TOPS OF TUBES.

PLAN VIEW - JOIN DETAIL

GENERAL NOTES FOR CONTINUOUS CONTAINED BERM/TUBE:

1. PROVIDE A MINIMUM BERM/TUBE DIAMETER OF 12 INCHES FOR SLOPES UP TO 50 FEET IN LENGTH WITH A SLOPE RATIO OF 3H:1V OR STEEPER. LONGER SLOPES OF 3H:1V MAY REQUIRE LARGER TUBE DIAMETER OR ADDITIONAL COURSING OF FILTER TUBES TO CREATE A FILTER BERM. REFER TO MANUFACTURER'S RECOMMENDATIONS FOR SITUATIONS WITH LONGER OR STEEPER SLOPES.
2. INSTALL BERM/TUBES ALONG CONTOURS AND PERPENDICULAR TO SHEET OR CONCENTRATED FLOW.
3. CONFIGURE BERM/TUBES AROUND EXISTING SITE FEATURES TO MINIMIZE SITE DISTURBANCE AND MAXIMIZE CAPTURE AREA OF STORMWATER RUN-OFF.

CONTINUOUS CONTAINED BERM DETAIL
SCALE: NOT TO SCALE C-501 A3

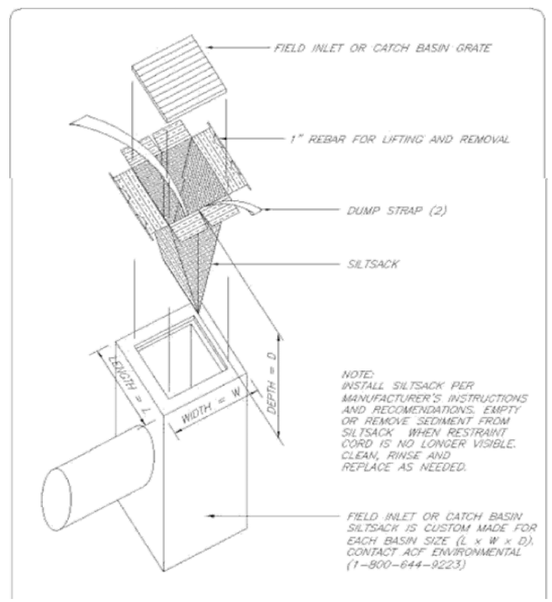

SILT SACK DETAIL
SCALE: NOT TO SCALE C-501 A5

GRAPHIC SCALE
1/8"=1'-0" 4' 0 4' 8' 12' 16'
CHECK GRAPHIC SCALE BEFORE USING

APPR	DATE	DESCRIPTION	STM

NAVFAC

COMMONWEALTH OF MASSACHUSETTS DAVID P. ANDERSON CIVIL No. 37119A 3/19/16 SEAL

MNFST A JOINT VENTURE A/E INFO

APPROVED David W. Kruegfield FOR COMMANDER NAVFAC

ACTIVITY: PER DOCUMENT FROM PNSY CODE 980, KITTERY ME

SATISFACTORY TO DATE: 05/09/16

DES: DPA | DRW: RWT | CHK: DPA

PM/DM: NATHAN LIBBY

BRANCH MANAGER: NATHAN MAHER

FEAD/PM&E: AMIN BAHROUR

FIRE PROTECTION: N/A

DEPARTMENT OF THE NAVY
NAVAL FACILITIES ENGINEERING COMMAND
PUBLIC WORKS DEPARTMENT - MAINE
PORTSMOUTH NAVAL SHIPYARD

NAVAL FACILITIES ENGINEERING COMMAND ~ MID-ATLANTIC
NAVAL SHIPYARD - PORTSMOUTH, NH
KITTERY, MAINE

STRUCTURAL REPAIRS AT BERTHS 11A, 11B AND 11C

SOIL EROSION AND SEDIMENT CONTROL DETAILS

EPROJECT NO.: 1356489

CONSTR. CONTR. NO. N40085-XX-C-XXXX

NAVFAC DRAWING NO. 12716056

SHEET 60 OF 144

C-501 | FP2-16-696

DRAWFORM REVISION: 10 OCTOBER 2014

FILE NAME: S:\1794\Active\179410203\VP-104A PNSY Lifting Study\VP-104A PNSY Lifting Study\02 CADD\05 Civil\FP2-16-696.dwg LAYOUT NAME: SOIL EROSION AND SEDIMENT CONTROL DETAILS PLOTTED: Friday, May 13, 2016 - 2:49pm USER: cgoodridge

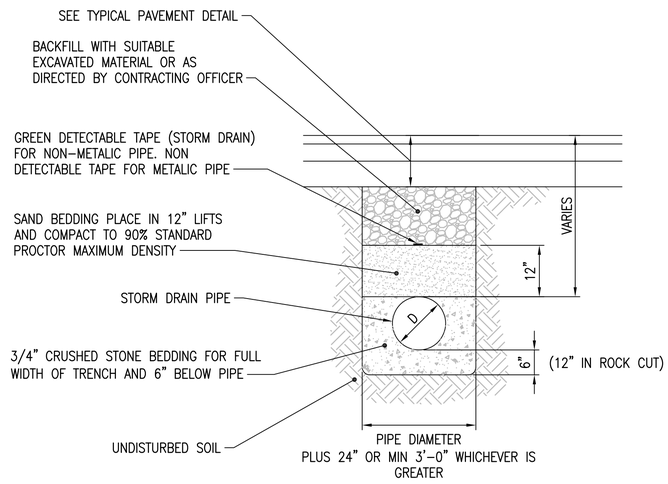

PIPE TRENCH DETAIL (D1)

NOT TO SCALE — C-502

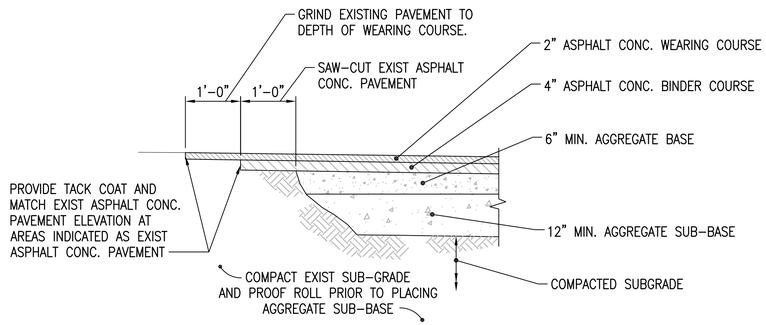

TYPICAL ASPHALT CONCRETE PAVEMENT DETAIL - CIA (B1)

NOT TO SCALE

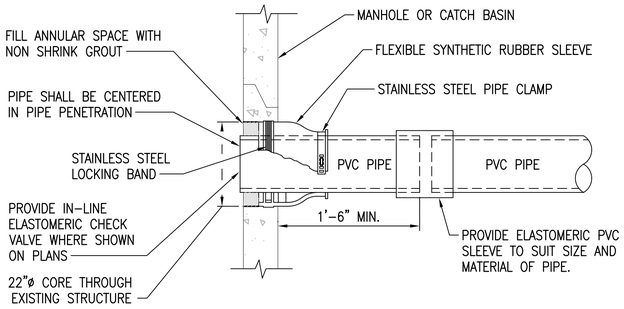

TYPICAL DRAIN PIPE CONNECTION DETAIL (A1)

NOT TO SCALE — C-502

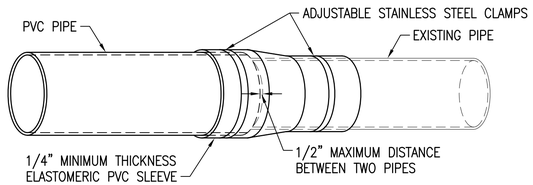

NOTE:

1. THE CONTRACTOR SHALL VERIFY THE O.D. OF THE EXISTING PIPE PRIOR TO ORDERING THE COUPLING.

TYPICAL SEWER AND DRAIN COUPLING DETAIL (D3)

NOT TO SCALE — C-301, C-302

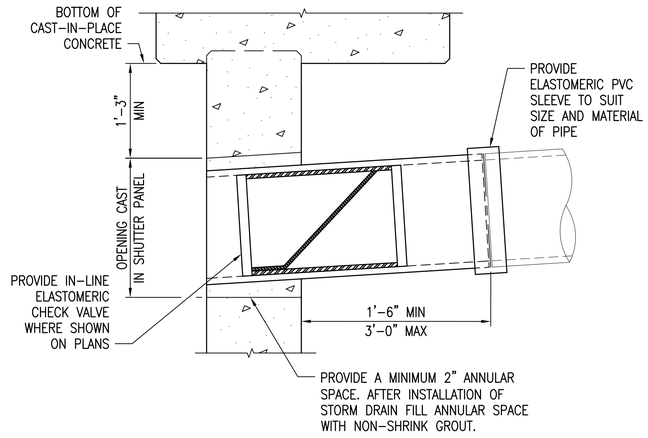

TYPICAL DRAIN PIPE PENETRATION AT SHUTTER PANEL (B3)

NOT TO SCALE — C-301, C-302

SHUTTER PANEL PIPE PENETRATION			
OUTFALL #	STATION	NOMINAL DIAMETER (IN)	MAXIMUM INVERT ELEVATION (FT)
15	21+11	10	-2.27
16	20+67	18	-2.95
17	12+00	18	-3.35
18	11+13	10	-2.27
19	9+90	15	-2.68
21	8+70	10	-2.27
22	7+67	18	-2.68
22A	6+57	8	-2.10
22B	7+18	10	-2.27
23	5+86	15	-2.68
23A	4+85	8	-2.10
24	4+43	10	-2.27
26	3+02	8	-2.10
26A	2+30	10	-2.27
27	1+52	10	-2.27

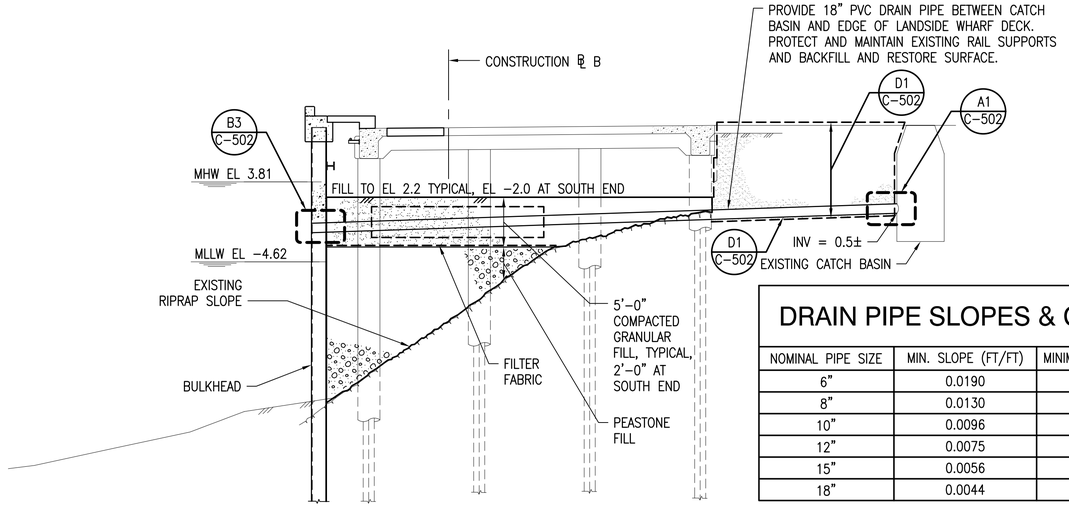

DRAIN PIPE SLOPES & COVER		
NOMINAL PIPE SIZE	MIN. SLOPE (FT/FT)	MINIMUM COVER (IN.)
6"	0.0190	8
8"	0.0130	8
10"	0.0096	10
12"	0.0075	10
15"	0.0056	14
18"	0.0044	14

SECTION - OUTFALL No 16 (A4)

SCALE: 1/8" = 1'-0" — C-104

GRAPHIC SCALE

1/8"=1'-0" 4' 0 4' 8' 12' 16'

CHECK GRAPHIC SCALE BEFORE USING

APPR | DATE | DESCRIPTION | MJS

NAVFAC

COMMONWEALTH OF MASSACHUSETTS — DAVID P. ANDERSON — CIVIL — No. 37119A — REGISTERED PROFESSIONAL ENGINEER — 3/9/16 — SEAL

MNFST A JOINT VENTURE — A/E INFO

APPROVED — David W. Thurfield — FOR COMMANDER NAVFAC

ACTMTY: PER DOCUMENT FROM PNSY CODE 980, KITTERY ME

SATISFACTORY TO — DATE: 05/09/16

DES: KAK | DRW: HBF | CHK: KAK

PM/DM: NATHAN LIBBY

BRANCH MANAGER: NATHAN MAHER

FEAD/PM&E: AMIN BAHROUR

FIRE PROTECTION: N/A

DEPARTMENT OF THE NAVY
NAVAL FACILITIES ENGINEERING COMMAND
PUBLIC WORKS DEPARTMENT - MAINE
PORTSMOUTH NAVAL SHIPYARD

NAVAL FACILITIES ENGINEERING COMMAND ~ MID-ATLANTIC
NAVAL SHIPYARD ~ PORTSMOUTH, NH
KITTERY, MAINE

STRUCTURAL REPAIRS AT BERTHS 11A, 11B AND 11C

DRAINAGE DETAILS

EPROJECT NO.: 1356489

CONSTR. CONTR. NO.: N40085-XX-C-XXXX

NAVFAC DRAWING NO.: 12716057

SHEET 61 OF 144

C-502 | FP2-16-697

DRAWFORM REVISION: 10 OCTOBER 2014

FILE NAME: S:\1794\Active\179410203\VTP-104A PNSY Lifting Study\VTP-104A PNSY Lifting Study\02 CAD\05 Civil\FP2-16-697.dwg LAYOUT NAME: DRAINAGE DETAILS PLOTTED: Friday, May 13, 2016 - 2:40pm

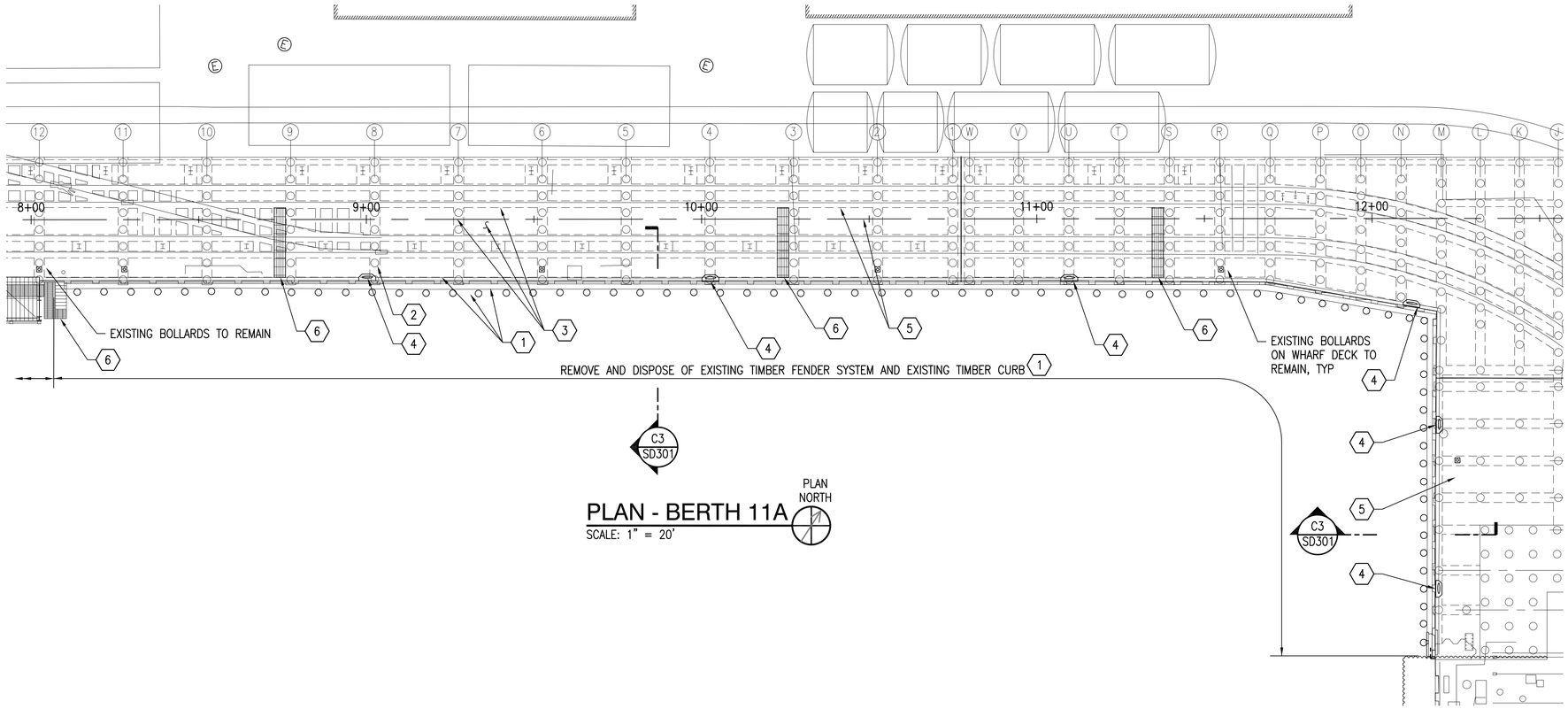

PLAN - BERTH 11A
SCALE: 1" = 20'

GENERAL NOTES

1. EXISTING TIMBER PILES SHALL BE REMOVED IN THEIR ENTIRETY. IF PILES ARE BROKEN ABOVE THE GROUND LINE DURING EXTRACTION THEY SHALL BE CUT OFF 1 FOOT ABOVE GROUND LINE.
2. EXISTING TIMBER RUB STRIPS AND CHOCKS AT BERTHS 11B AND 11C ARE CCA TREATED.
3. EXISTING TIMBER FENDER SYSTEM PILES, WALES, BLOCKS AND CHOCKS ARE TREATED WITH EITHER CCA OR CREOSOTE.
4. EXISTING TIMBER CURB AT BERTH 11A IS TREATED WITH EITHER CCA OR CREOSOTE.
5. UTILITIES ARE NOT SHOWN FOR CLARITY, SEE V-101 TO V-104, M-101 TO M-105, AND E-101 TO E-102 FOR EXISTING UTILITIES.

DEMOLITION NOTES

1. REMOVE AND DISPOSE OF 515 LF± EXISTING TIMBER FENDER SYSTEM (TIMBER PILES, WALES AND CHOCKS) AND EXISTING TIMBER CURB.
2. REMOVE AND DISPOSE OF DETERIORATED PORTIONS OF PILE JACKETS. SEE SHEET S-121 AND S-122 FOR REMOVAL LOCATION PLAN AND SHEET S-518 FOR DETAILS.
3. REMOVE AND DISPOSE OF DETERIORATED PORTIONS OF THE DECK, BEAMS, PILE CAPS AND CONCRETE PILE ENCASEMENT IN THE EXISTING WHARF DECK STRUCTURE. SEE SHEET S-115 THRU S-120 FOR LOCATION AND BID QUANTITIES.
4. REMOVE AND DISPOSE OF 6 EXISTING CLEATS ON CONCRETE DECK.
5. REMOVE AND DISPOSE OF SECTIOINS OF CONCRETE DECK FOR FILL PLACEMENT AND SUPPORT PILE INSTALLATION SEE SHEETS S-108 THRU S-111 FOR LOCATIONS.
6. REMOVE AND DISPOSE OF BELOW DECK FRP CATWALK INCLUDING SUPPORTING MEMBERS. CUT ANCHOR BOLTS FLUSH.

KEY PLAN

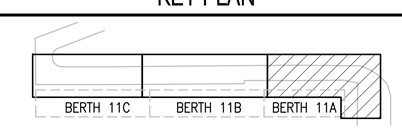

GRAPHIC SCALE

1"=20'
20' 0 20' 40'

CHECK GRAPHIC SCALE BEFORE USING

SYM	DESCRIPTION	DATE	APPR

NAVFAC

SEAL

MN FST A JOINT VENTURE

A/E INFO

APPROVED
David W. Greenfield
FOR COMMANDER NAVFAC

ACTIVITY:
PER DOCUMENT FROM PNSY CODE 980, KITTERY ME

SATISFACTORY TO DATE: 05/09/16

DES DWH | DRW CHG | CHK DWH

PM/DM: NATHAN LIBBY

BRANCH MANAGER: NATHAN MAHER

FEAD/PM&E: AMIN BAHROUR

FIRE PROTECTION: N/A

DEPARTMENT OF THE NAVY
NAVAL FACILITIES ENGINEERING COMMAND
NAVAL FACILITIES ENGINEERING COMMAND ~ MID-ATLANTIC
PUBLIC WORKS DEPARTMENT – MAINE
NAVAL SHIPYARD – PORTSMOUTH, NH
PORTSMOUTH NAVAL SHIPYARD
KITTERY, MAINE

STRUCTURAL REPAIRS AT BERTHS 11A, 11B AND 11C

DEMOLITION PLAN – STRUCTURAL – SHEET 1 OF 2

EPROJECT NO.: 1356489

CONSTR. CONTR. NO.
N40085-XX-C-XXXX

NAVFAC DRAWING NO.
12716058

SHEET 62 OF 144

SD101 FP2-16-698

DRAWFORM REVISION: 10 OCTOBER 2014

FILE NAME: S:\1794\Active\179410203\\TP-104A PNSY Lifting Study\TP-104A PNSY Lifting Study\02 CADD\08 Structural\FP2-16-698.dwg LAYOUT NAME: DEMOLITION PLAN – STRUCTURAL – SHEET 1 OF 2 PLOTTED: Friday, May 13, 2016 – 2:41pm USER: cgoodridge

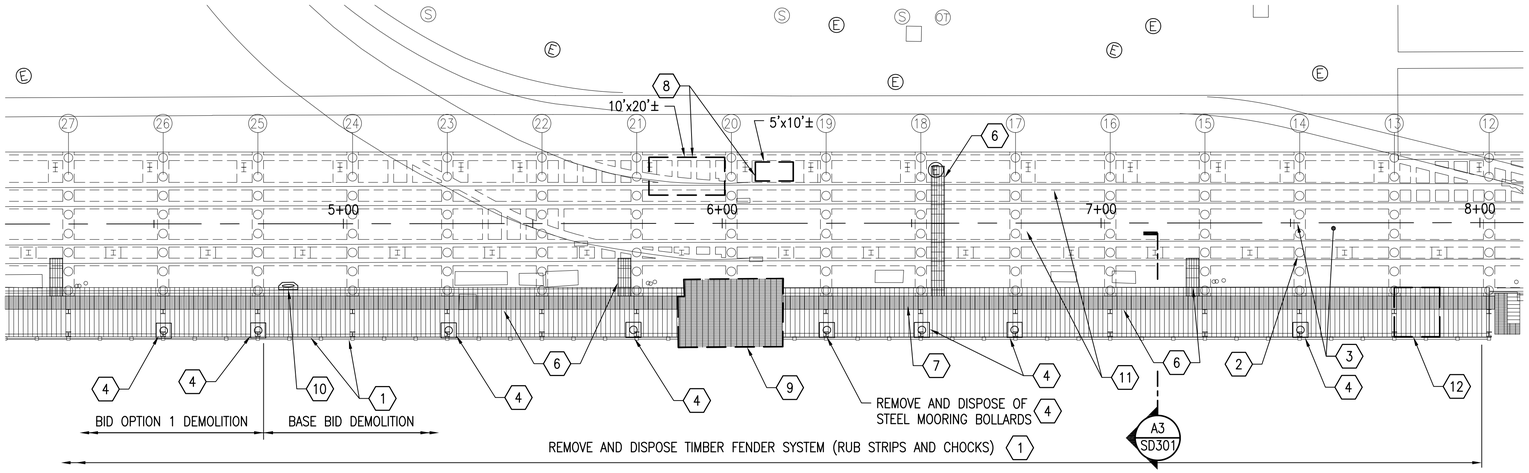

PLAN - BERTH 11B

SCALE: 1" = 20'

PLAN NORTH

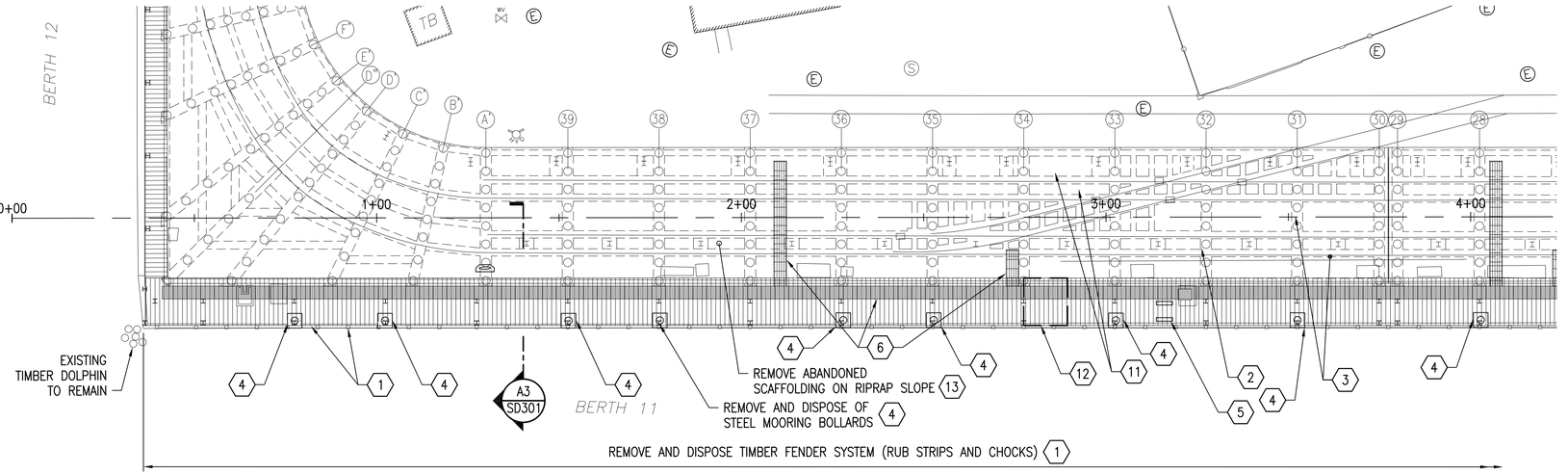

PLAN - BERTH 11C

SCALE: 1" = 20'

PLAN NORTH

GENERAL NOTES

1. EXISTING TIMBER PILES SHALL BE REMOVED IN THEIR ENTIRETY. IF PILES ARE BROKEN ABOVE THE GROUND LINE DURING EXTRACTION THEY SHALL BE CUT OFF 1 FOOT ABOVE GROUND LINE.
2. EXISTING TIMBER RUB STRIPS AND CHOCKS AT BERTHS 11B AND 11C ARE CCA TREATED.
3. EXISTING TIMBER FENDER SYSTEM PILES, WALES, BLOCKS AND CHOCKS ARE TREATED WITH EITHER CCA OR CREOSOTE.
4. EXISTING TIMBER CURB AT BERTH 11A IS TREATED WITH EITHER CCA OR CREOSOTE.
5. UTILITIES ARE NOT SHOWN FOR CLARITY, SEE V–101 TO V–104, M–101 TO M–105, AND E–101 TO E–102 FOR EXISTING UTILITIES.

DEMOLITION NOTES

1. REMOVE AND DISPOSE OF 765'± EXISTING TIMBER FENDER (RUB STRIPS AND CHOCKS).
2. REMOVE AND DISPOSE OF DETERIORATED PORTIONS OF PILE JACKETS. SEE SHEET S–121 AND S–122 FOR REMOVAL LOCATIONS AND SHEET S–518 FOR DETAILS.
3. REMOVE AND DISPOSE OF DETERIORATED PORTIONS OF THE DECK, BEAMS, PILE CAPS AND CONCRETE ENCASEMENT IN THE EXISTING WHARF DECK STRUCTURE. SEE SHEET S–115 THRU S–120 FOR LOCATION AND BID QUANTITIES.
4. REMOVE AND DISPOSE OF 17 STEEL BOLLARDS AT THE TOP OF MASTER PILES.
5. REMOVE AND DISPOSE EXISTING BROW AND SERVICE PLATFORM ANCHORAGES THAT ARE BEING REPLACED.
6. REMOVE AND DISPOSE OF BELOW DECK FRP CATWALK. PORTION OF CATWALK WEST OF STATION 0+80 TO REMAIN.
7. REMOVE AND DISPOSE OF STEEL LADDER, 10'± LONG.
8. UNDERMINED CONCRETE SHELF BELOW DECK ON GROUND SURFACE TO BE BROKEN UP TO FACILITATE BACKFILL. CONCRETE MAY BE LEFT ON SLOPE. FOR BIDDING PURPOSES ASSUME 2' THICK, REINFORCED CONCRETE.
9. REMOVE AND DISPOSE EXISTING STEEL EFFLUENT TANK PLATFORM AND SUPPORTS. PLATFORM IS 18.5'± WIDE BY 28'± LONG. PLATFORM CONSISTS OF 50'± OF HANDRAIL, 3/8" THICK DECK PLATE, SEVEN 18.5' LONG W14 BEAMS, 56'± OF 12" CHANNEL, FOURTEEN 1" DIAMETER ANCHOR BOLTS AND MISCELLANEOUS BRACING INCLUDING TWELVE 2'± LONG L3x3x5/16" ANGLES.
10. REMOVE AND DISPOSE OF 1 EXISTING CLEAT AT THE EXISTING CONCRETE DECK.
11. REMOVE AND DISPOSE OF SECTIONS OF THE CONCRETE DECK FOR FILL PLACEMENT AND SUPPORT PILE INSTALLATION. SEE SHEET S–108 THRU S–111 FOR LOCATIONS.
12. REMOVE TIMBER DECK PLANK PANELS FOR FILL PLACEMENT. REINSTALL PANELS AFTER FILL HAS BEEN PLACED. SEE SHEET S–108 THRU S–111 FOR LOCATIONS.
13. REMOVE AND DISPOSE OF ABANDONDED SCAFFOLDING LOCATED BELOW THE WHARF, UNDERWATER, ON THE RIPRAP SLOPE.

KEY PLAN

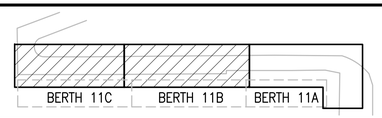

GRAPHIC SCALE

1"=20'

20' 0 20' 40'

CHECK GRAPHIC SCALE BEFORE USING

APPR	DATE	DESCRIPTION	MJS

NAVFAC

SEAL

MNFST A JOINT VENTURE

A/E INFO

APPROVED
David W. Grunfeld
FOR COMMANDER NAVFAC

ACTIVITY:
PER DOCUMENT FROM PNSY
CODE 980, KITTERY ME

SATISFACTORY TO DATE: 05/09/16

DES	DWH	DRW	CHG	CHK	DWH

PM/DM: NATHAN LIBBY
BRANCH MANAGER: NATHAN MAHER
FEAD/PM&E: AMIN BAHROUR
FIRE PROTECTION: N/A

DEPARTMENT OF THE NAVY
NAVAL FACILITIES ENGINEERING COMMAND
PUBLIC WORKS DEPARTMENT – MAINE
PORTSMOUTH NAVAL SHIPYARD

NAVAL FACILITIES ENGINEERING COMMAND – MID-ATLANTIC
NAVAL SHIPYARD – PORTSMOUTH, NH

STRUCTURAL REPAIRS AT BERTHS 11A, 11B AND 11C

KITTERY, MAINE

DEMOLITION PLAN – STRUCTURAL – SHEET 2 OF 2

EPROJECT NO.: 1356489

CONSTR. CONTR. NO.
N40085–XX–C–XXXX

NAVFAC DRAWING NO.
12716059

SHEET 63 OF 144

SD102 FP2-16-699

DRAWFORM REVISION: 10 OCTOBER 2014

FILE NAME: S:\1794\Active\179410203\VTP-104A PNSY Lifting Study\TP-104A PNSY Lifting Study\02 CAD\08 Structural\FP2-16-699.dwg LAYOUT NAME: DEMOLITION PLAN – STRUCTURAL – SHEET 2 OF 2 PLOTTED: Friday, May 13, 2016 – 2:41pm USER: cpoodridge

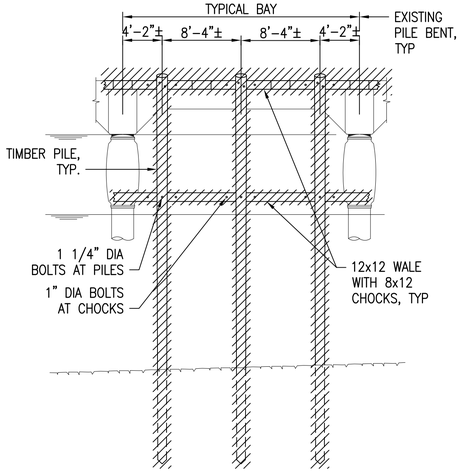

ELEVATION - BERTH 11A FENDER SYSTEM C1

SCALE: 1/8" = 1'-0" SD301

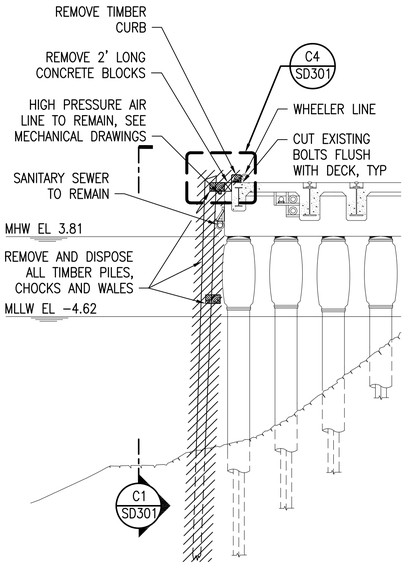

SECTION - BERTH 11A AND HEAD END C3

SCALE: 1/8" = 1'-0" SD101

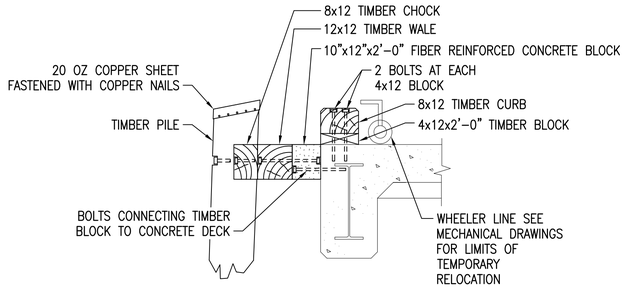

DETAIL - EXISTING CURB AND FENDER FASTENINGS C4

SCALE: 1/2" = 1'-0" SD301

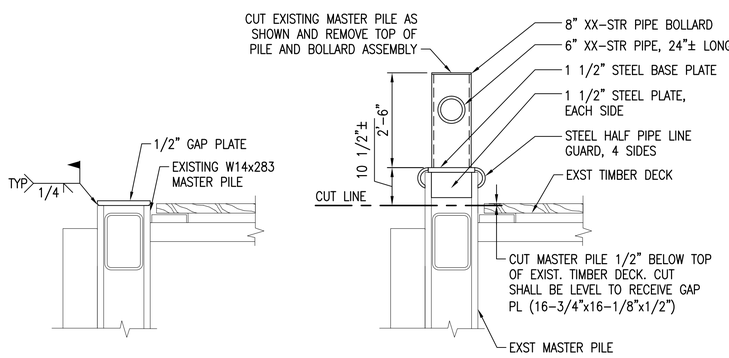

DETAIL - BOLLARD DEMOLITION B4

SCALE: 1/2" = 1'-0" SD301

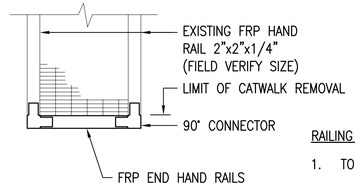

RAILING DESIGN LOAD:

1. TOP LEVEL SHOWN, BOTTOM SIMILAR.
2. UNIFORM LOADING, APPLIED HORIZONTALLY AND VERTICALLY AT TOP OF RAIL, SIMULTANEOUSLY 50 PLF.
3. CONCENTRATED LOAD 200 LB.

DETAIL - CATWALK HAND RAIL TERMINATION A4

NOT TO SCALE SD301

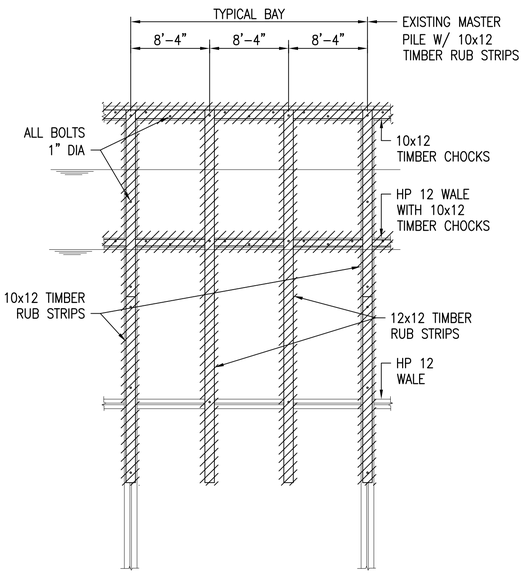

ELEVATION - BERTH 11B AND 11C FENDER SYSTEM A1

SCALE: 1/8" = 1'-0" SD301

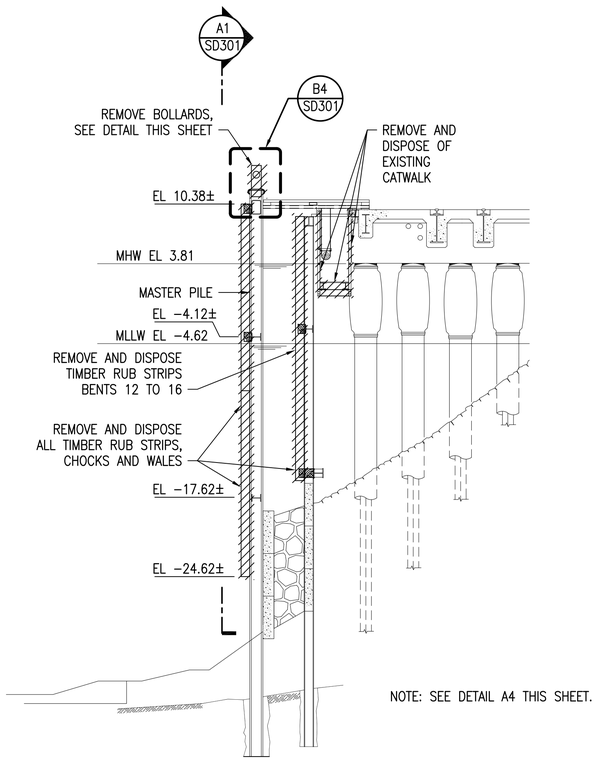

SECTION - BERTH 11B AND 11C A3

SCALE: 1/8" = 1'-0" SD102

GRAPHIC SCALE

1/8"=1'-0" 4' 0 4' 8' 12' 16'

CHECK GRAPHIC SCALE BEFORE USING

APPR	DATE	DESCRIPTION	SYM

NAVFAC

COMMONWEALTH OF MASSACHUSETTS — MARK NICOLAZZO — No. 51721 — REGISTERED PROFESSIONAL ENGINEER — SEAL

MNFST A JOINT VENTURE A/E INFO

APPROVED: David W. Shufield
FOR COMMANDER NAVFAC

ACTIVITY: PER DOCUMENT FROM PNSY CODE 980, KITTERY ME

SATISFACTORY TO DATE: 05/09/16

DES	DWH	DRW	CHG	CHK	DWH

PM/DM: NATHAN LIBBY
BRANCH MANAGER: NATHAN MAHER
FEAD/PM&E: AMIN BAHROUR
FIRE PROTECTION: N/A

DEPARTMENT OF THE NAVY
NAVAL FACILITIES ENGINEERING COMMAND
PUBLIC WORKS DEPARTMENT - MAINE
PORTSMOUTH NAVAL SHIPYARD

NAVAL FACILITIES ENGINEERING COMMAND – MID-ATLANTIC
NAVAL SHIPYARD – PORTSMOUTH, NH

STRUCTURAL REPAIRS AT BERTHS 11A, 11B AND 11C

KITTERY, MAINE

DEMOLITION SECTIONS

EPROJECT NO.: 1356489

CONSTR. CONTR. NO. N40085-XX-C-XXXX

NAVFAC DRAWING NO. 12716060

SHEET 64 OF 144

SD301 | FP2-16-700

DRAWFORM REVISION: 10 OCTOBER 2014

FILE NAME: S:\1794\Active\179410203\\TP-104A PNSY Lifting Study\TP-104A PNSY Lifting Study\02 CAD\08 Structural\FP2-16-700 .dwg LAYOUT NAME: DEMOLITION SECTIONS PLOTTED: Friday, May 13, 2016 - 2:42pm USER: cgoodridge

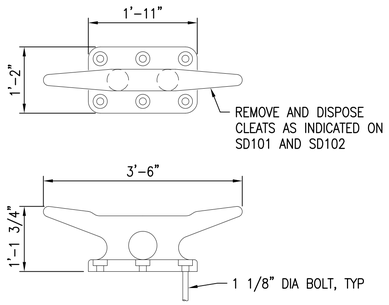

42 INCH CAST CLEAT AT BERTH 11A (D1)

SCALE: 3/4"=1'-0" SD501

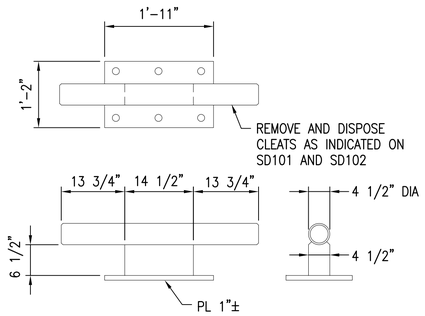

FABRICATED CLEAT AT BERTH 11A (C1)

SCALE: 3/4"=1'-0" SD501

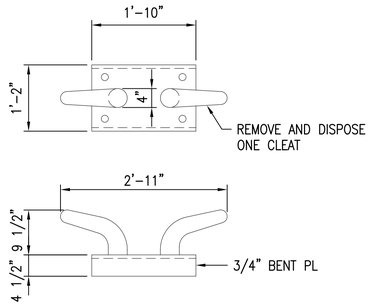

CLEAT AT BENT 24 (B1)

SCALE: 3/4"=1'-0" SD501

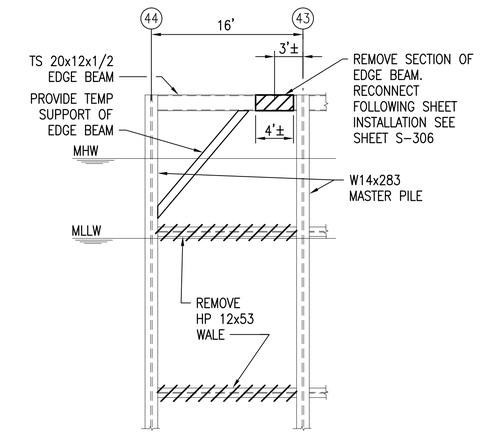

REMOVALS FOR OPTION 1 BULKHEAD RETURN

ELEVATION - EXISTING WATERSIDE MASTER PILES AND FRAMING (C2)

SCALE: 1/8" = 1'-0" SD501

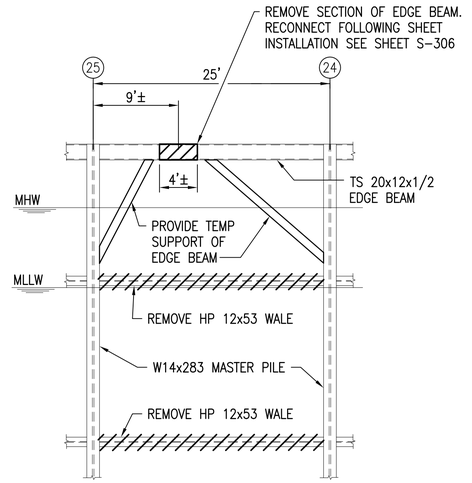

REMOVALS FOR BASE BID BULKHEAD RETURN

ELEVATION - EXISTING WATERSIDE MASTER PILES AND FRAMING (C3)

SCALE: 1/8" = 1'-0" SD501

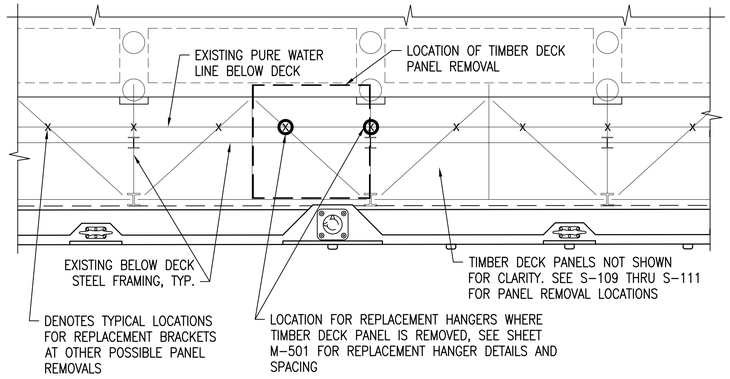

PART PLAN - PURE WATER LINE HANGER REPLACEMENT - BERTHS 11B/11C

SCALE: 1/8"=1'-0"

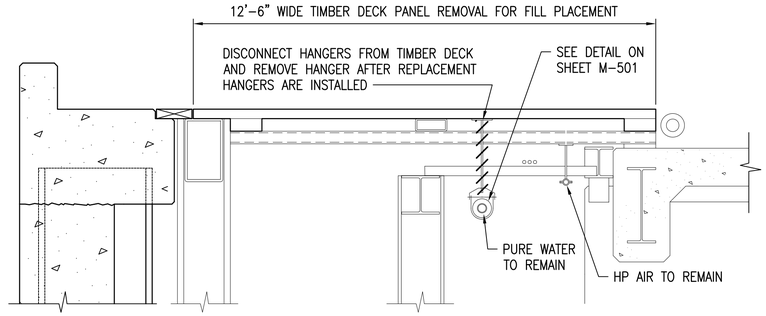

SECTION - PURE WATER HANGER REMOVALS

SCALE: 1/2"=1'-0"

1/8"=1'-0" 4' 0 4' 8' 12' 16'

GRAPHIC SCALE

3/4"=1'-0" 1' 0' 1' 2' 4'

CHECK GRAPHIC SCALE BEFORE USING

NO.	DESCRIPTION	DATE	APPR

NAVFAC

COMMONWEALTH OF MASSACHUSETTS MARK NICOLAZZO 51724 REGISTERED PROFESSIONAL ENGINEER

SEAL

MNFST A JOINT VENTURE

A/E INFO

APPROVED David W. Grunfeld FOR COMMANDER NAVFAC

ACTIVITY: PER DOCUMENT FROM PNSY CODE 980, KITTERY ME

SATISFACTORY TO DATE: 05/09/16

DES: MN | DRW: RWT | CHK: DWH

PM/DM: NATHAN LIBBY

BRANCH MANAGER: NATHAN MAHER

FEAD/PM&E: AMIN BAHROUR

FIRE PROTECTION: N/A

DEPARTMENT OF THE NAVY
NAVAL FACILITIES ENGINEERING COMMAND
PUBLIC WORKS DEPARTMENT - MAINE
PORTSMOUTH NAVAL SHIPYARD

NAVAL FACILITIES ENGINEERING COMMAND ~ MID-ATLANTIC
NAVAL SHIPYARD ~ PORTSMOUTH, NH
KITTERY, MAINE

STRUCTURAL REPAIRS AT BERTHS 11A, 11B AND 11C

DEMOLITION DETAILS

EPROJECT NO.: 1356489

CONSTR. CONTR. NO. N40085-XX-C-XXXX

NAVFAC DRAWING NO. 12716061

SHEET 65 OF 144

SD501 | FP2-16-701

DRAWFORM REVISION: 10 OCTOBER 2014

FILE NAME: S:\1794\Active\179410203\x\TP-104A PNSY Lifting Study\TP-104A PNSY Lifting Study\02 CADD\08 Structural\FP2-16-701.dwg LAYOUT NAME: DEMOLITION DETAILS PLOTTED: Friday, May 13, 2016 - 2:42pm USER: cgoodridge

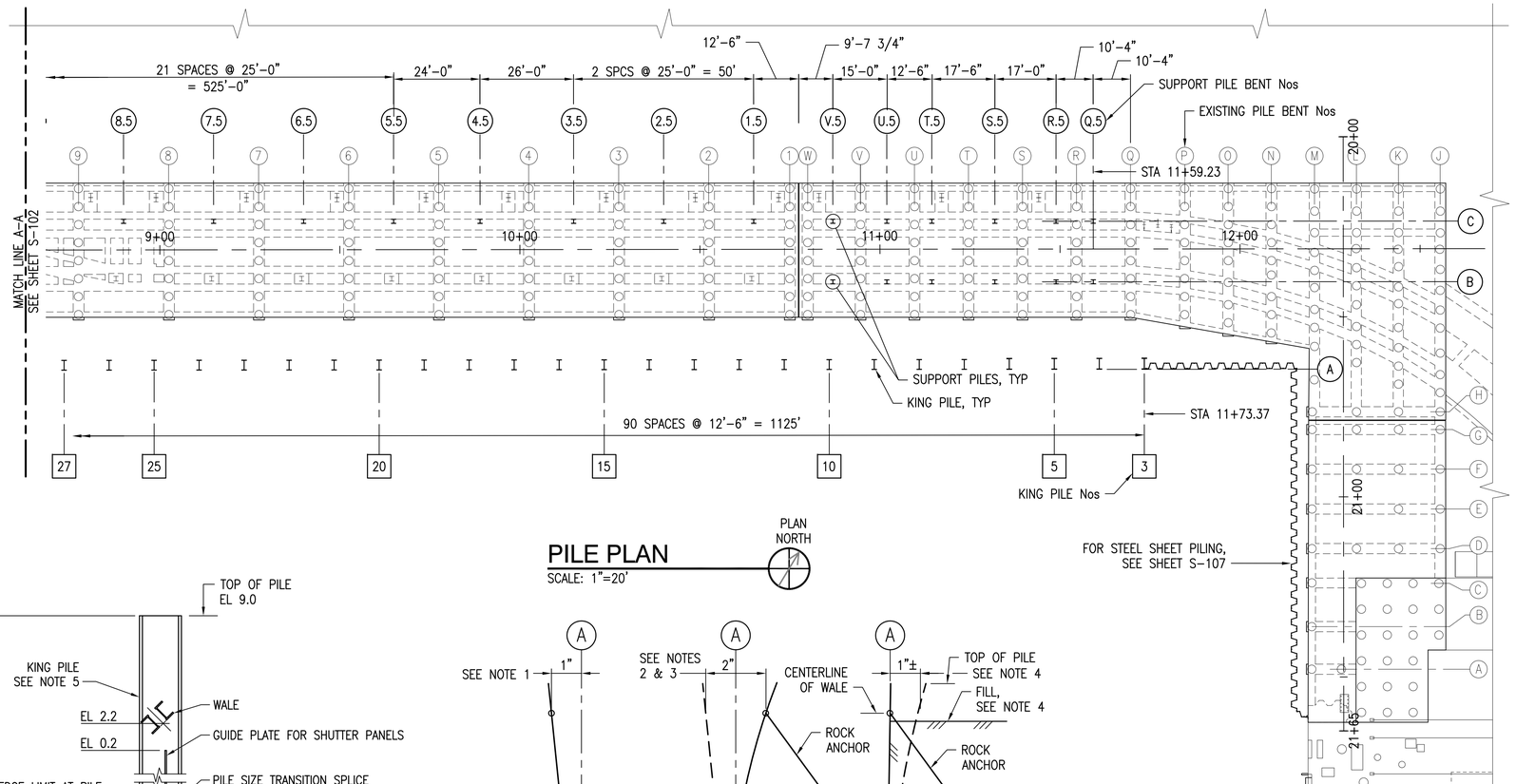

PILE PLAN

SCALE: 1"=20'

PLAN NORTH

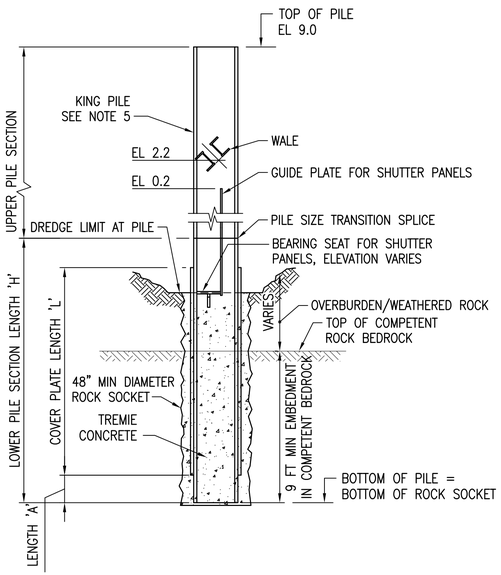

DETAIL - ROCK SOCKET B1

NOT TO SCALE

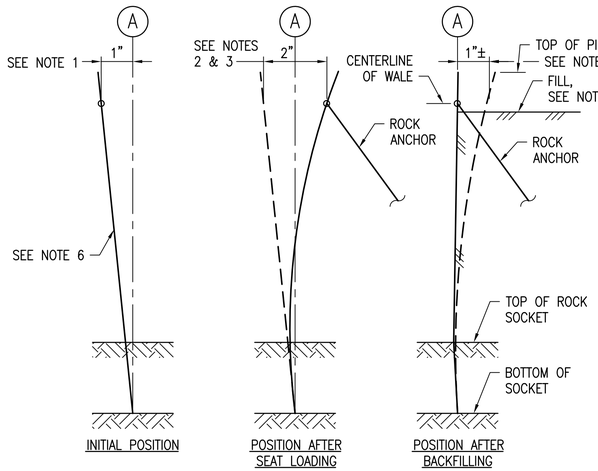

KING PILE POSITIONING B2

NOT TO SCALE

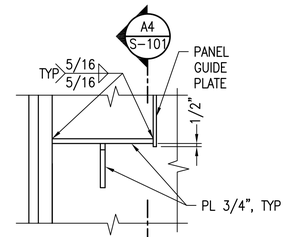

SECTION A3

SCALE: 1" = 1'-0" S-101

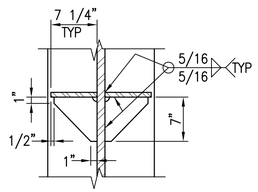

SECTION A4

SCALE: 1" = 1'-0" S-101

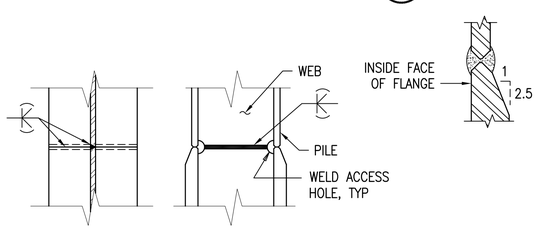

DETAIL - PILE TRANSITION SPLICE A1

NOT TO SCALE

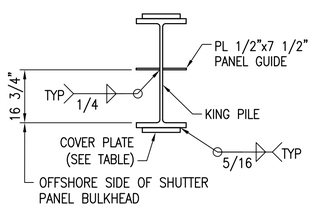

DETAIL - KING PILE A2

NOT TO SCALE

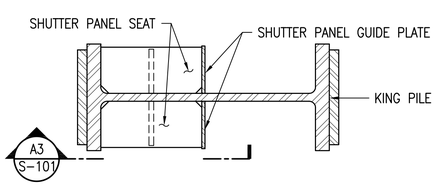

DETAIL - SHUTTER PANEL SEAT A3

SCALE: 1" = 1'-0"

SCHEDULE OF ESTIMATED SUPPORT PILE TIP ELEVATIONS*

PILE BENT NO.	ROW B	ROW C
Q.5 & R.5	-48	-45
S.5 TO V.5	-44	-42
1.5 TO 4.5	NA	-38
5.5 TO 13.5	NA	-32
14.5 TO 23.5	NA	-37
24.5 TO 31.5	NA	-46
32.5 TO 37.5	NA	-37
38.5 TO 39.5	NA	-42

* THE INTENT OF THIS SCHEDULE IS TO PROVIDE A BASIS FOR BIDDING ONLY. THE PILES SHALL BE INSTALLED IN ACCORDANCE WITH THE CONTRACT REQUIREMENTS TO REFUSAL ON BEDROCK. ACTUAL TIP ELEVATIONS WILL VARY FROM THIS SCHEDULE. PILE ORDER LENGTHS SHALL BE LONGER THAN THE THEORETICAL LENGTH USING THE ESTIMATED TIP ELEVATIONS.

KING PILE POSITIONING NOTES:

1. KING PILES SHALL BE POSITIONED 1" OUT OF PLUMB TO THE WATER SIDE OF LINE A AT THE CENTERLINE OF WALE. THE ROCK SOCKETS SHALL BE CONCRETED WITH THE PILES IN THIS POSITION.
2. PRIOR TO PLACING BACKFILL, TENSION THE ROCK ANCHORS SUCH THAT THE KING PILES (AT THE CENTERLINE OF WALE) MOVES 2" AS SHOWN. APPLY THE NECESSARY LOAD TO THE ANCHORS TO IMPOSE THIS MOVEMENT ON THE PILES. THIS SEATING LOAD WILL VARY BASED ON THE HEIGHT OF PILE, BUT IT IS ESTIMATED TO BE 30 KIPS +/-.
3. THE PRESTRESSING WEDGES MUST BE POWER-SEATED AT THIS TIME, AND RETAINER PLATE INSTALLED.
4. WHEN PLACING BACKFILL THE ROCK ANCHORS WILL ELONGATE AND THE KING PILES WILL MOVE BACK TOWARD THE WATER AND WILL BE CLOSE TO PLUMB AFTER THE FILL IS PLACED. THE CONCRETE CAP SHALL NOT BE PLACED UNTIL THE FILL IS BROUGHT UP TO ELEVATION -2.8 OR HIGHER.
5. THE CONCRETE CAP SHALL BE LOCATED PER THE PLAN DIMENSIONS FROM THE CONSTRUCTION BASELINE.
6. IF THERE IS A NATURAL CAMBER IN THE KING PILES, THE CAMBER (CONCAVE SIDE) SHALL BE LOCATED ON THE WATERSIDE.

LEGEND:

I HP14x117 SUPPORT PILE

I W SECTION BULKHEAD KING PILE, SEE TABLE FOR SIZES (SEE NOTE 5)

NOTES:

1. SUPPORT PILES SHALL BE DRIVEN TO BEDROCK.
2. SUPPORT PILE DESIGN CAPACITY = 100 TONS COMPRESSION (200 TON ULTIMATE CAPACITY)
3. KING PILES SHALL BE INSTALLED IN DRILLED ROCK SOCKETS.
4. SEE SHEET S-107 FOR PILE PLAN WORKING POINTS.
5. SEE SHEETS S-102 & S-103 FOR BULKHEAD KING PILE SCHEDULE TABLE

1"=1'-0" 1' 6" 0 1' 3' 9" 3"

KEY PLAN

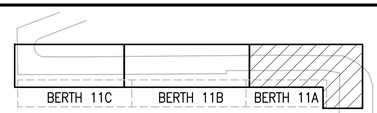

GRAPHIC SCALE

1"=20' 20' 0 20' 40'

CHECK GRAPHIC SCALE BEFORE USING

APPR	DATE	DESCRIPTION	SYM

DONALD W. HARVIE CIVIL No. 31022 REGISTERED PROFESSIONAL ENGINEER
3/7/16
SEAL

MNFST A JOINT VENTURE
A/E INFO

APPROVED
David W. Thurfield
FOR COMMANDER NAVFAC

ACTIVITY:
PER DOCUMENT FROM PNSY CODE 980, KITTERY ME

SATISFACTORY TO: DATE: 05/09/14

DES	DWH	DRW	RWT	CHK	DWH

PM/DM: NATHAN LIBBY
BRANCH MANAGER: NATHAN MAHER
FEAD/PM&E: AMIN BAHROUR
FIRE PROTECTION: N/A

DEPARTMENT OF THE NAVY
NAVAL FACILITIES ENGINEERING COMMAND
PUBLIC WORKS DEPARTMENT - MAINE
PORTSMOUTH NAVAL SHIPYARD

NAVAL FACILITIES ENGINEERING COMMAND ~ MID-ATLANTIC
NAVAL SHIPYARD - PORTSMOUTH, NH
KITTERY, MAINE

STRUCTURAL REPAIRS AT BERTHS 11A, 11B AND 11C

PILE PLAN - SHEET 1 OF 3

EPROJECT NO.: 1356489
CONSTR. CONTR. NO.: N40085-XX-C-XXXX
NAVFAC DRAWING NO.: 12716062
SHEET 66 OF 144
S-101 FP2-16-702
DRAWFORM REVISION: 10 OCTOBER 2014

FILE NAME: S:\1794\Active\179410203\V\TP-1044 PNSY Lifting Study\TP-1044A PNSY Lifting Study\02 CAD\08 Structure\FP2-16-704.dwg LAYOUT NAME: PILE PLAN - SHEET 1 OF 3 PLOTTED: Friday, May 13, 2016 - 2:43pm USER: rgoodridge

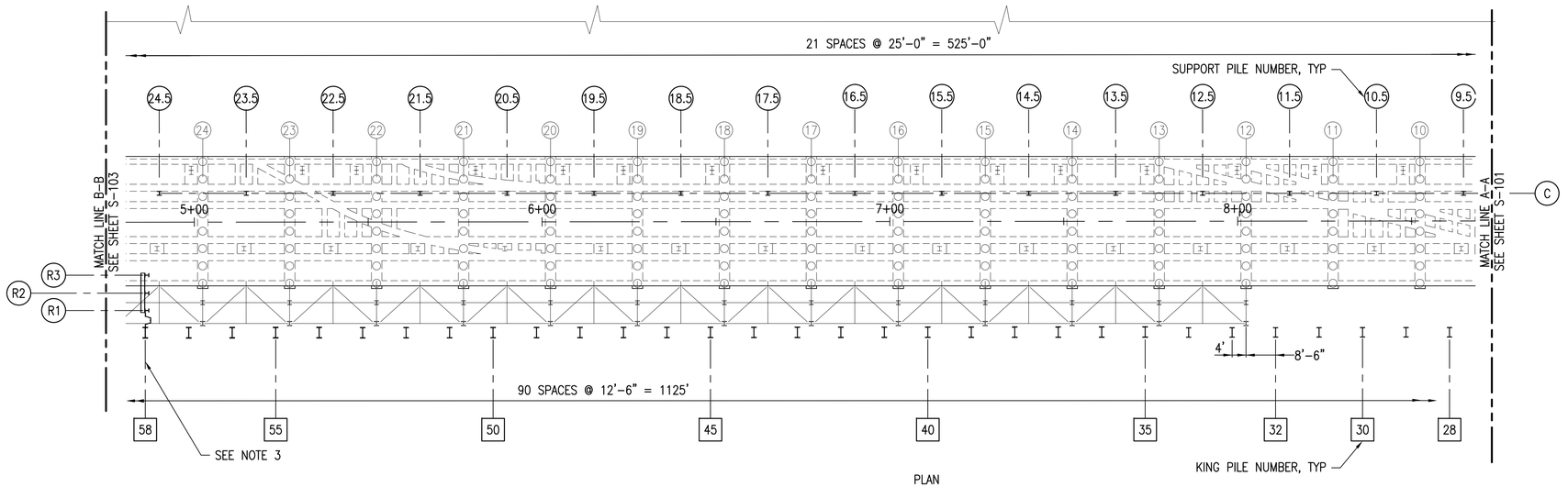

PILE PLAN
SCALE: 1"=20'

PLAN NORTH

BULKHEAD RETURN WALL PILES

PILE No	PILE SIZE	ESTIMATED PILE TIP ELEVATION
R1	HP 14x117	-55
R2	HP 14x117	-55
R3	HP 14x117	-55

BULKHEAD KING PILES

PILE NO.	LOWER PILE SECTION		COVER PLATE			UPPER PILE SECTION	ESTIMATED PILE TIP ELEVATION (SEE NOTE 1)
	SIZE	LENGTH 'H' (FT)	SIZE	LENGTH 'A' (FT)	LENGTH 'L' (FT)	SIZE	
1	SEE NOTE 2						
2	SEE NOTE 2						
3	W36x395	23	1 1/4"x15"	2	20	W36x330	-61
4	W36x395	23	1 1/4"x15"	2	20	W36x330	-57
5	W36x282	NA	1 1/2"x15"	2.5	15	W36x282	-52
6	W36x282	NA	1 1/2"x15"	2.5	15	W36x282	-52
7	W36x231	NA	3/4"x15"	4.5	10	W36x231	-48
8	W36x231	NA	3/4"x15"	4.5	10	W36x231	-48
9	W36x231	NA	3/4"x15"	4.5	10	W36x231	-48
10	W36x231	NA	3/4"x15"	4.5	10	W36x231	-46
11	W36x231	NA	3/4"x15"	4.5	10	W36x231	-46
12	W36x231	NA	3/4"x15"	4.5	10	W36x231	-46
13	W36x231	NA	3/4"x15"	4.5	10	W36x231	-46
14	W36x231	NA	3/4"x15	4.5	10	W36x231	-46
15	W36x231	NA	3/4"x15"	4.5	10	W36x231	-46
16	W36x231	NA	3/4"x15"	4.5	10	W36x231	-46
17	W36x231	NA	3/4"x15"	4.5	10	W36x231	-46
18	W36x231	NA	3/4"x15"	4.5	10	W36x231	-46
19	W36x231	NA	3/4"x15"	4.5	10	W36x231	-46
20	W36x231	NA	3/4"x15"	4.5	10	W36x231	-46

BULKHEAD KING PILES

PILE NO.	LOWER PILE SECTION		COVER PLATE			UPPER PILE SECTION	ESTIMATED PILE TIP ELEVATION (SEE NOTE 1)
	SIZE	LENGTH 'H' (FT)	SIZE	LENGTH 'A' (FT)	LENGTH 'L' (FT)	SIZE	
21	W36x231	NA	3/4"x15"	4.5	10	W36x231	-46
22	W36x231	NA	3/4"x15"	4.5	10	W36x231	-46
23	W36x231	NA	3/4"x15"	4.5	10	W36x231	-46
24	W36x231	NA	3/4"x15"	4.5	10	W36x231	-46
25	W36x231	NA	3/4"x15"	4.5	10	W36x231	-46
26	W36x231	NA	3/4"x15"	4.5	10	W36x231	-46
27	W36x231	NA	3/4"x15"	4.5	10	W36x231	-46
28	W36x231	NA	3/4"x15"	4.5	10	W36x231	-46
29	W36x231	NA	3/4"x15"	4.5	10	W36x231	-46
30	W36x231	NA	3/4"x15"	4.5	10	W36x231	-46
31	W36x231	NA	3/4"x15"	4.5	10	W36x231	-48
32	W36x231	NA	3/4"x15"	4.5	10	W36x231	-48
33	W36x231	NA	3/4"x15"	4.5	10	W36x231	-48
34	W36x231	NA	3/4"x15"	4.5	10	W36x231	-48
35	W36x282	NA	1 1/2"x15"	2.5	15	W36x282	-52
36	W36x282	NA	1 1/2"x15"	2.5	15	W36x282	-52
37	W36x282	NA	1 1/2"x15"	2.5	15	W36x282	-52
38	W36x282	NA	1 1/2"x15"	2.5	15	W36x282	-52
39	W36x282	NA	1 1/2"x15"	2.5	15	W36x282	-52
40	W36x282	NA	1 1/2"x15"	2.5	15	W36x282	-54

BULKHEAD KING PILES

PILE NO.	LOWER PILE SECTION		COVER PLATE			UPPER PILE SECTION	ESTIMATED PILE TIP ELEVATION (SEE NOTE 1)
	SIZE	LENGTH 'H' (FT)	SIZE	LENGTH 'A' (FT)	LENGTH 'L' (FT)	SIZE	
41	W36x282	NA	1 1/2"x15"	2.5	15	W36x282	-54
42	W36x282	NA	1 1/2"x15"	2.5	15	W36x282	-54
43	W36x282	NA	1 1/2"x15"	2.5	15	W36x282	-54
44	W36x282	NA	1 1/2"x15"	2.5	15	W36x282	-54
45	W36x282	NA	1 1/2"x15"	2.5	15	W36x282	-54
46	W36x282	NA	1 1/2"x15"	2.5	15	W36x282	-54
47	W36x282	NA	1 1/2"x15"	2.5	15	W36x282	-54
48	W36x282	NA	1 1/2"x15"	2.5	15	W36x282	-54
49	W36x282	NA	1 1/2"x15"	2.5	15	W36x282	-54
50	W36x282	NA	1 1/2"x15"	2.5	15	W36x282	-54
51	W36x282	NA	1 1/2"x15"	2.5	15	W36x282	-54
52	W36x282	NA	1 1/2"x15"	2.5	15	W36x282	-54
53	W36x282	NA	1 1/2"x15"	2.5	15	W36x282	-54
54	W36x395	23	1 1/4"x15"	2	20	W36x330	-58
55	W36x395	23	1 1/4"x15"	2	20	W36x330	-58
56	W36x395	23	1 1/4"x15"	2	20	W36x330	-58
57	W36x395	23	1 1/4"x15"	2	20	W36x330	-61
58	W36x395	23	1 1/4"x15"	2	20	W36x330	-61

NOTES:

1. THE INTENT OF PROVIDING THE ESTIMATED KING PILE TIP ELEVATIONS IS TO PROVIDE A BASIS FOR BIDDING ONLY. ACTUAL TIP ELEVATIONS WILL VARY. THE CONTRACTOR SHALL TAKE PROBES AT EACH KING PILE LOCATION TO DETERMINE THE BEDROCK ELEVATIONS PRIOR TO ORDERING KING PILES OR FABRICATING SHUTTER PANELS.
2. IN ADDITION TO THE KING PILE LOCATIONS, THE CONTRACTOR SHALL TAKE PROBES AT LOCATIONS 12.5 FT AND 25 FT TO THE EAST OF KING PILE No 3, ALONG THE A PILE LINE, WITHIN THE LIMITS OF THE STEEL SHEET PILING PORTION OF THE BULKHEAD PRIOR TO ORDERING THE THE KING PILES OR STEEL SHEET PILING.
3. BASE BID KING PILES INCLUDE PILES Nos 3 THRU 58. BID OPTION 1 INCLUDE KING PILES Nos 59 THRU 93.
4. ALL SUPPORT PILE ARE PART OF THE BASE BID.

LEGEND:

I – HP14x117 SUPPORT PILE

I – W SECTION BULKHEAD KING PILE, SEE TABLE FOR SIZES

KEY PLAN

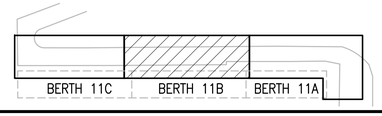

GRAPHIC SCALE

1"=20' 20' 0 20' 40'

CHECK GRAPHIC SCALE BEFORE USING

APPR | DATE | DESCRIPTION | SYM

NAVFAC

DONALD W. HARVIE CIVIL No. 21022 REGISTERED PROFESSIONAL ENGINEER
3/7/16
SEAL

MNFST A JOINT VENTURE
A/E INFO

APPROVED
for COMMANDER
David W. Trumfield
FOR COMMANDER NAVFAC

ACTIVITY: PER DOCUMENT FROM PNSY CODE 980, KITTERY ME
SATISFACTORY TO DATE: 05/09/16
DES DWH | DRW RWT | CHK DWH
PM/DM: NATHAN LIBBY
BRANCH MANAGER: NATHAN MAHER
FEAD/PM&E: AMIN BAHROUR
FIRE PROTECTION: N/A

DEPARTMENT OF THE NAVY
NAVAL FACILITIES ENGINEERING COMMAND
PUBLIC WORKS DEPARTMENT - MAINE
PORTSMOUTH NAVAL SHIPYARD

NAVAL FACILITIES ENGINEERING COMMAND ~ MID-ATLANTIC
NAVAL SHIPYARD ~ PORTSMOUTH, NH
KITTERY, MAINE

STRUCTURAL REPAIRS AT BERTHS 11A, 11B AND 11C

PILE PLAN – SHEET 2 OF 3

EPROJECT NO.: 1356489
CONSTR. CONTR. NO. N40085-XX-C-XXXX
NAVFAC DRAWING NO. 12716063
SHEET 67 OF 144
S-102 | FP2-16-703

DRAWFORM REVISION: 10 OCTOBER 2014

FILE NAME: S:\1794\Active\179410203\VTP-104A PNSY Lifting Study\VTP-104A PNSY Lifting Study\02 CADD\08 Structural\FP2-16-704.dwg LAYOUT NAME: PILE PLAN - SHEET 2 OF 3 PLOTTED: Friday, May 13, 2016 - 2:43pm USER: cgoodridge

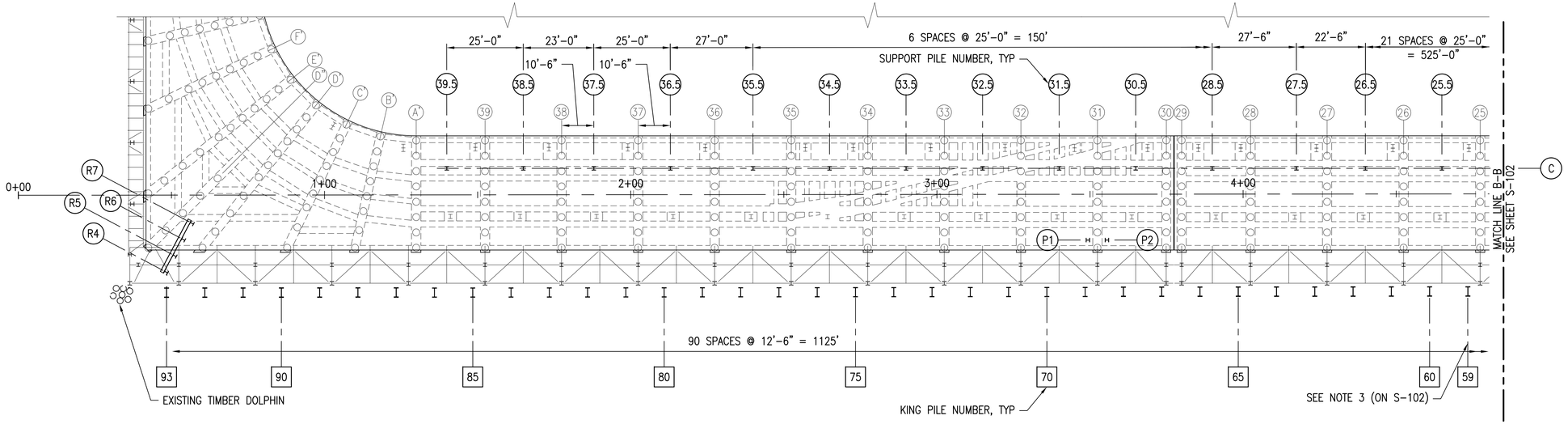

BULKHEAD RETURN WALL PILES

PILE No	PILE SIZE	ESTIMATED PILE TIP ELEVATION
R4	HP 14x117	-60
R5	HP 14x117	-60
R6	HP 14x117	-60
R7	HP 14x117	-60

PILE PLAN

SCALE: 1"=20'

PLAN NORTH

EQUIPMENT PLATFORM PILES

PILE No	PILE SIZE	ESTIMATED PILE TIP ELEVATION
P1	HP 14x117	-48
P2	HP 14x117	-48

BULKHEAD KING PILES

PILE NO.	LOWER PILE SECTION		COVER PLATE			UPPER PILE SECTION	ESTIMATED PILE TIP ELEVATION*
	SIZE	LENGTH 'H' (FT)	SIZE	LENGTH 'A' (FT)	LENGTH 'L' (FT)	SIZE	
59	W36x395	23	1 1/4"x15"	2	20	W36X330	-61
60	W36x395	24	1 3/4"x15"	2	21	W36x361	-66
61	W36x395	24	1 3/4"x15"	2	21	W36x361	-66
62	W36x395	24	1 3/4"x15"	2	21	W36x361	-66
63	W36x395	24	1 3/4"x15"	2	21	W36x361	-66
64	W36x395	24	1 3/4"x15"	2	21	W36x361	-66
65	W36x395	24	1 3/4"x15"	2	21	W36x361	-66
66	W36x395	24	1 3/4"x15"	2	21	W36x361	-66
67	W36x395	24	1 1/4"x15"	2	21	W36x330	-61
68	W36x395	24	1 1/4"x15"	2	21	W36x330	-61
69	W36x395	24	1 1/4"x15"	2	21	W36x330	-57
70	W36x395	24	1 1/4"x15"	2	21	W36x330	-57
71	W36x395	24	1 1/4"x15"	2.5	21	W36x330	-57
72	W36x282	NA	1 1/2"x15"	2.5	15	W36x282	-51
73	W36x282	NA	1 1/2"x15"	2.5	15	W36x282	-51
74	W36x282	NA	1 1/2"x15"	2.5	15	W36x282	-51
75	W36x282	NA	1 1/2"x15"	2.5	15	W36x282	-51
76	W36x282	NA	1 1/2"x15"	2.5	15	W36x282	-51

BULKHEAD KING PILES

PILE NO.	LOWER PILE SECTION		COVER PLATE			UPPER PILE SECTION	ESTIMATED PILE TIP ELEVATION*
	SIZE	LENGTH 'H' (FT)	SIZE	LENGTH 'A' (FT)	LENGTH 'L' (FT)	SIZE	
77	W36x282	NA	1 1/2"x15"	2.5	15	W36x282	-51
78	W36x282	NA	1 1/2"x15"	2.5	15	W36x282	-51
79	W36x282	NA	1 1/2"x15"	2.5	15	W36x282	-51
80	W36x282	NA	1 1/2"x15"	2.5	15	W36x282	-51
81	W36x282	NA	1 1/2"x15"	2.5	15	W36x282	-51
82	W36x282	NA	1 1/2"x15"	2.5	15	W36x282	-51
83	W36x282	NA	1 1/2"x15"	2.5	15	W36x282	-51
84	W36x395	23	1 1/4"x15"	2	20	W36x330	-57
85	W36x395	23	1 1/4"x15"	2	20	W36x330	-57
86	W36x395	23	1 1/4"x15"	2	20	W36x330	-57
87	W36x395	23	1 1/4"x15"	2	20	W36x330	-61
88	W36x395	23	1 1/4"x15"	2	20	W36x330	-61
89	W36x395	23	1 1/4"x15"	2	20	W36X330	-61
90	W36x395	24	1 3/4"x15"	2	21	W36x361	-66
91	W36x395	24	1 3/4"x15"	2	21	W36x361	-66
92	W36x395	24	1 3/4"x15"	2	21	W36x361	-66
93	W36x395	24	1 3/4"x15"	2	21	W36x361	-66

NOTE:

1. SEE SHEETS S-101 AND S-102 FOR NOTES.

LEGEND:

H - HP14x117 SUPPORT PILE

I - W SECTION BULKHEAD KING PILE, SEE TABLE FOR SIZES

KEY PLAN

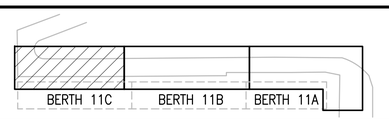

GRAPHIC SCALE

1"=20'

20' 0 20' 40'

CHECK GRAPHIC SCALE BEFORE USING

APPR | DATE | DESCRIPTION | SYM

NAVFAC

DONALD W. HARVIE CIVIL No. 21022 REGISTERED PROFESSIONAL ENGINEER
3/7/16
SEAL

MNFST A JOINT VENTURE
A/E INFO

APPROVED
FOR COMMANDER NAVFAC

ACTIVITY:
PER DOCUMENT FROM PNSY CODE 980, KITTERY ME

SATISFACTORY TO DATE: 05/09/16

DES: DWH | DRW: CHG | CHK: DWH

PM/DM: NATHAN LIBBY

BRANCH MANAGER: NATHAN MAHER

FEAD/PM&E: AMN BAHROUR

FIRE PROTECTION: N/A

DEPARTMENT OF THE NAVY
NAVAL FACILITIES ENGINEERING COMMAND
PUBLIC WORKS DEPARTMENT - MAINE
PORTSMOUTH NAVAL SHIPYARD

NAVAL FACILITIES ENGINEERING COMMAND - MID-ATLANTIC
NAVAL SHIPYARD - PORTSMOUTH, NH
KITTERY, MAINE

STRUCTURAL REPAIRS AT BERTHS 11A, 11B AND 11C

PILE PLAN - SHEET 3 OF 3

EPROJECT NO.: 1356489

CONSTR. CONTR. NO.
N40085-XX-C-XXXX

NAVFAC DRAWING NO.
12716064

SHEET 68 OF 144

S-103 | FP2-16-704

DRAWFORM REVISION: 10 OCTOBER 2014

FILE NAME: S:\1794\Active\179410203\VTP-104A PKSY Lifting Study\TP-104A PKSY Lifting Study\02 CAD\08 Structural\FP2-16-704.dwg LAYOUT NAME: PILE PLAN - SHEET 3 OF 3 PLOTTED: Friday, May 13, 2016 - 2:43pm USER: rgoodridge

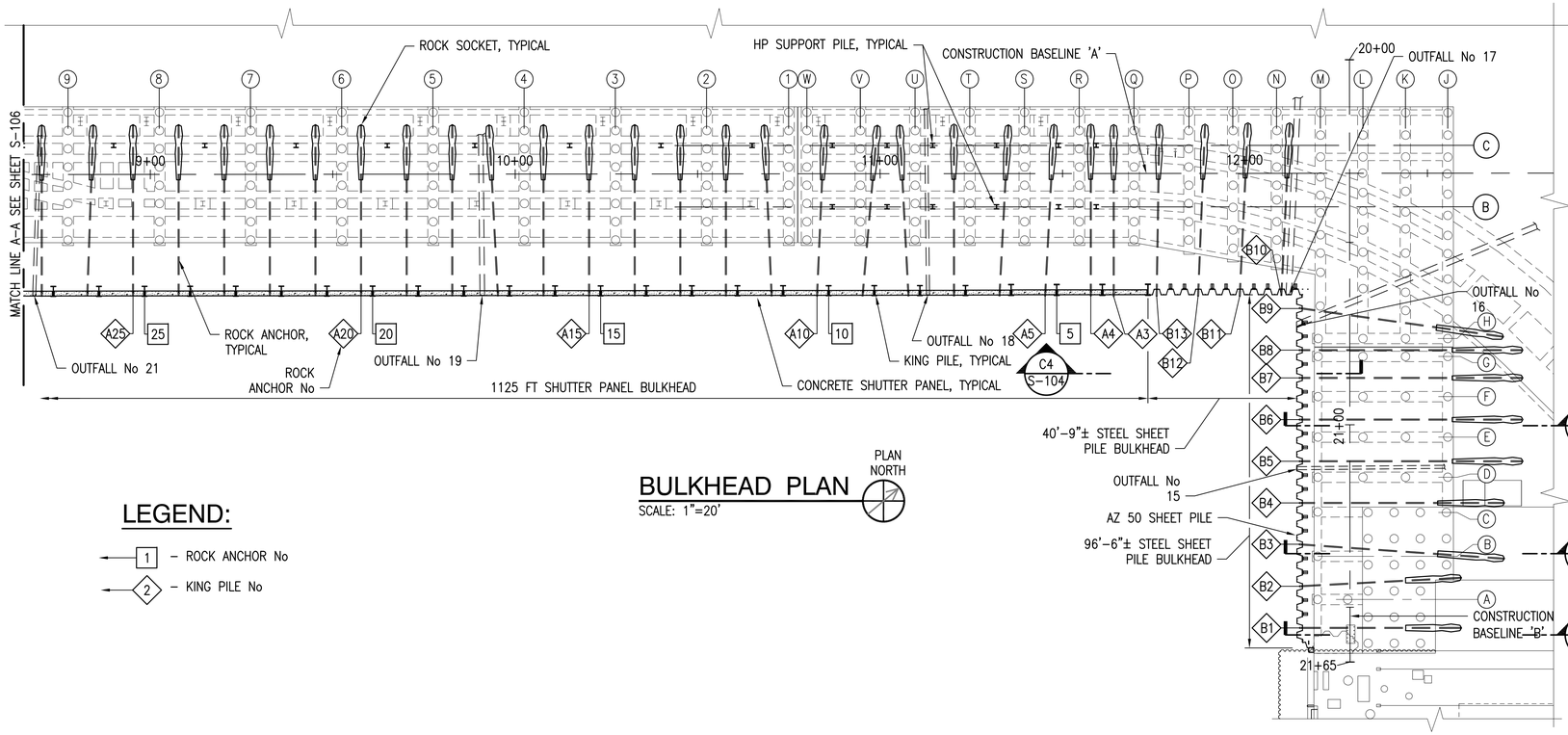

BULKHEAD PLAN

SCALE: 1"=20'

PLAN NORTH

LEGEND:

1 – ROCK ANCHOR No

2 – KING PILE No

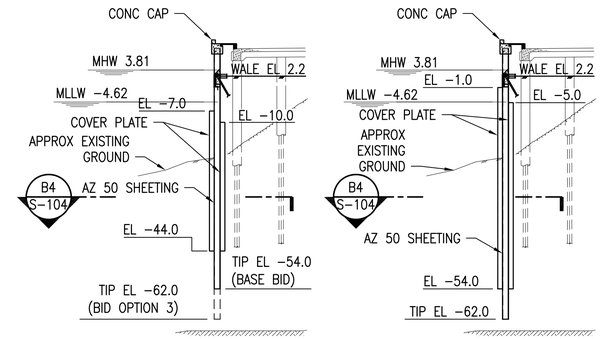

BASE BID/ BID OPTION 3

BID OPTION 4

SECTION - SHEET PILE

SCALE: 1"=20' S-104 C4

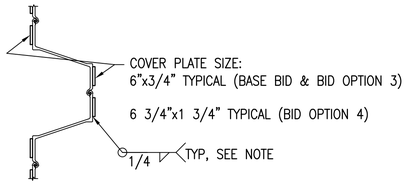

NOTE: USE 5/16 FILLET FOR BID OPTION 4

SECTION - COVER PLATE

SCALE: 1/2" = 1'-0" S-104 B4

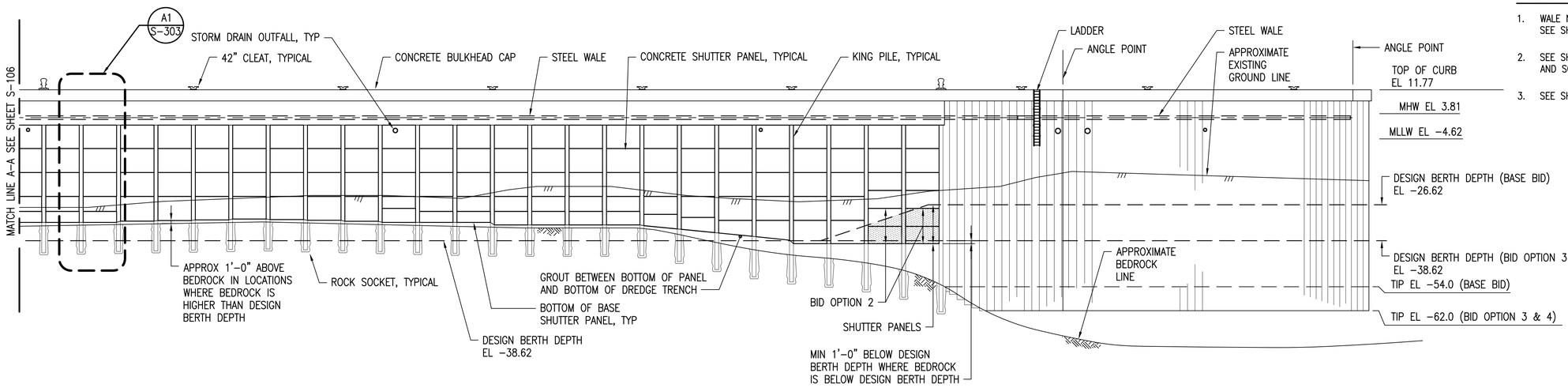

BULKHEAD ELEVATION

SCALE: 1"=20' A1

NOTES:

1. WALE NOT SHOWN IN PLAN VIEW FOR CLARITY. SEE SHEET S-501 FOR WALE DETAILS.
2. SEE SHEET S-608 FOR ROCK ANCHOR TABLES AND SCHEDULES.
3. SEE SHEET S-303 FOR SHUTTER PANEL DETAILS.

3/4"=1'-0"

1' 0' 1' 2' 4'

GRAPHIC SCALE

1"=20'

20' 0 20' 40'

CHECK GRAPHIC SCALE BEFORE USING

APPR | DATE | DESCRIPTION | SYM

NAVFAC

DONALD W. HARVIE CIVIL No. 13022 REGISTERED PROFESSIONAL ENGINEER 3/7/16 SEAL

MNFST A JOINT VENTURE A/E INFO

APPROVED David W. Shufield FOR COMMANDER NAVFAC

ACTIVITY: PER DOCUMENT FROM PNSY CODE 980, KITTERY ME

SATISFACTORY TO DATE: 05/09/16

DES: DJM | DRW: RWT | CHK: DJM

PM/DM: NATHAN LIBBY

BRANCH MANAGER: NATHAN MAHER

FEAD/PM&E: AMIN BAHROUR

FIRE PROTECTION: N/A

DEPARTMENT OF THE NAVY
NAVAL FACILITIES ENGINEERING COMMAND
PUBLIC WORKS DEPARTMENT - MAINE
PORTSMOUTH NAVAL SHIPYARD

NAVAL FACILITIES ENGINEERING COMMAND – MID-ATLANTIC
NAVAL SHIPYARD – PORTSMOUTH, NH
KITTERY, MAINE

STRUCTURAL REPAIRS AT BERTHS 11A, 11B AND 11C

BULKHEAD PLAN AND ELEVATION – SHEET 1 OF 3

EPROJECT NO.: 1356489

CONSTR. CONTR. NO. N40085-XX-C-XXXX

NAVFAC DRAWING NO. 12716065

SHEET 69 OF 144

S-104 | FP2-16-705

DRAWFORM REVISION: 10 OCTOBER 2014

FILE NAME: S:\1794\Active\179410203\1794 PNSY Lifting Study\TP-104A PNSY Lifting Study\02 CAD\08 Structural\FP2-16-707.dwg LAYOUT NAME: BULKHEAD PLAN AND ELEVATION – SHEET 1 OF 3 PLOTTED: Friday, May 13, 2016 – 2:44pm USER: cgoodridge

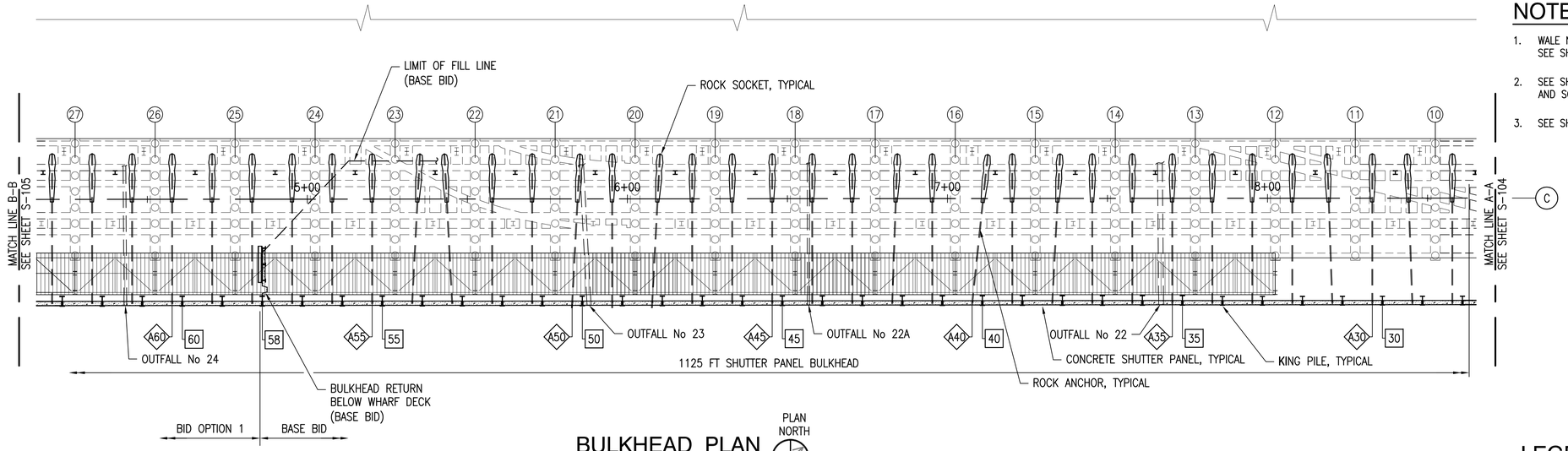

BULKHEAD PLAN

SCALE: 1"=20'

NOTES:

1. WALE NOT SHOWN IN PLAN VIEW FOR CLARITY. SEE SHEET S-501 FOR WALE DETAILS.
2. SEE SHEET S-608 FOR ROCK ANCHOR TABLES AND SCHEDULES.
3. SEE SHEET S-303 FOR SHUTTER PANEL DETAILS.

LEGEND:

1 – ROCK ANCHOR No

2 – KING PILE No

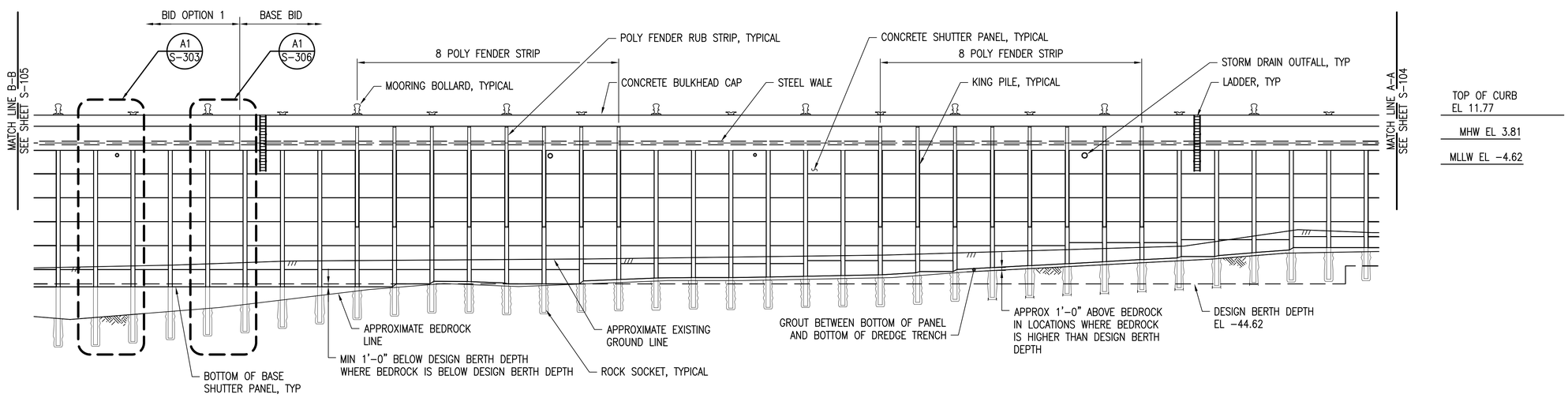

BULKHEAD ELEVATION (B1)

SCALE: 1"=20'

GRAPHIC SCALE

1"=20' 20' 0 20' 40'

CHECK GRAPHIC SCALE BEFORE USING

SYM	DESCRIPTION	DATE	APPR

NAVFAC

DONALD W. HARVIE CIVIL No. 31270 REGISTERED PROFESSIONAL ENGINEER

3/7/16

SEAL

MN FST A JOINT VENTURE

A/E INFO

APPROVED David W. Greenfield

FOR COMMANDER NAVFAC

ACTIVITY: PER DOCUMENT FROM PNSY CODE 980, KITTERY ME

SATISFACTORY TO DATE: 05/09/16

DES DJM DRW RWT CHK DJM

PM/DM: NATHAN LIBBY

BRANCH MANAGER: NATHAN MAHER

FEAD/PM&E: AMIN BAHROUR

FIRE PROTECTION: N/A

DEPARTMENT OF THE NAVY
NAVAL FACILITIES ENGINEERING COMMAND
PUBLIC WORKS DEPARTMENT – MAINE

NAVAL FACILITIES ENGINEERING COMMAND ~ MID-ATLANTIC
NAVAL SHIPYARD – PORTSMOUTH, NH

PORTSMOUTH NAVAL SHIPYARD

KITTERY, MAINE

STRUCTURAL REPAIRS AT BERTHS 11A, 11B AND 11C

BULKHEAD PLAN AND ELEVATION – SHEET 2 OF 3

EPROJECT NO.: 1356489

CONSTR. CONTR. NO. N40085-XX-C-XXXX

NAVFAC DRAWING NO. 12716066

SHEET 70 OF 144

S-105 FP2-16-706

DRAWFORM REVISION: 10 OCTOBER 2014

FILE NAME: S:\1794\Active\179410203\Y\TP-104A PNSY Lifting Study\TP-104A PNSY Lifting Study\02 CADD\08 Structural\FP2-16-707.dwg LAYOUT NAME: BULKHEAD PLAN AND ELEVATION – SHEET 2 OF 3 PLOTTED: Friday, May 13, 2016 – 2:44pm USER: cgoodridge

NOTES:

1. WALE NOT SHOWN IN PLAN VIEW FOR CLARITY. SEE SHEET S-501 FOR WALE DETAILS.
2. SEE SHEET S-608 FOR ROCK ANCHOR TABLES AND SCHEDULES.
3. SEE SHEET S-303 FOR SHUTTER PANEL DETAILS.

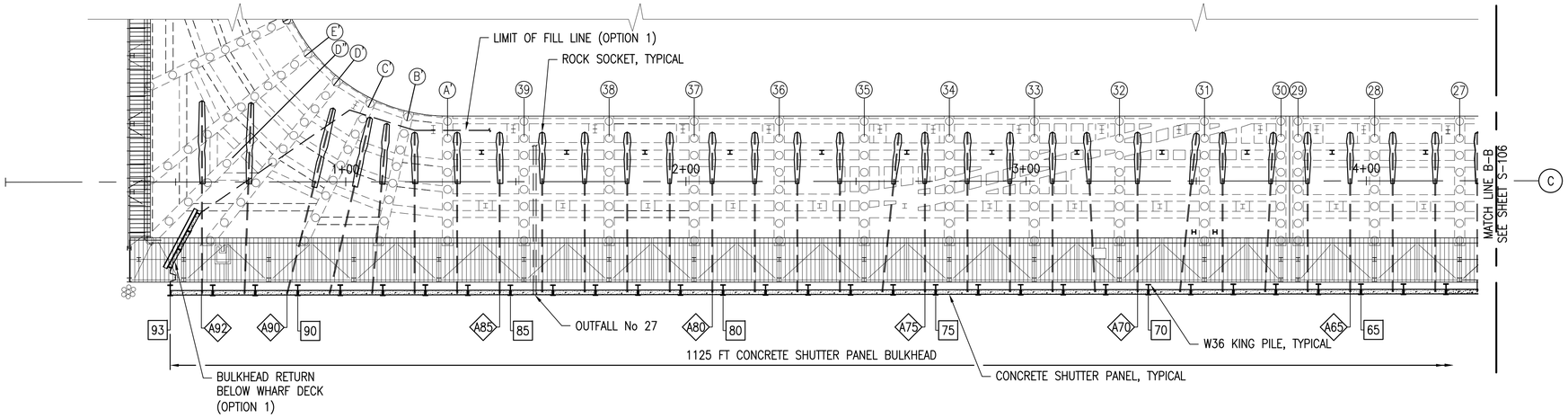

BULKHEAD PLAN

SCALE: 1"=20'

PLAN NORTH

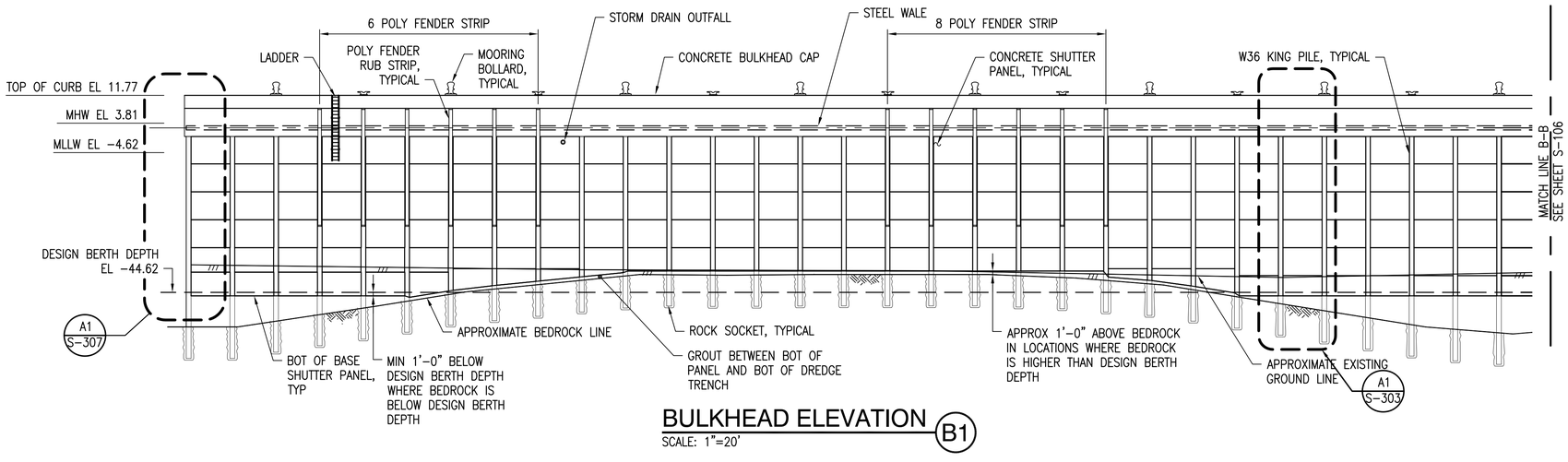

BULKHEAD ELEVATION (B1)

SCALE: 1"=20'

GRAPHIC SCALE

1"=20' 20' 0 20' 40'

CHECK GRAPHIC SCALE BEFORE USING

SYM	DESCRIPTION	DATE	APPR

NAVFAC

DONALD W. HARVIE CIVIL No. 31070 REGISTERED PROFESSIONAL ENGINEER

3/7/16

SEAL

MN FST A JOINT VENTURE

A/E INFO

APPROVED David W. Greenfield

FOR COMMANDER NAVFAC

ACTIVITY: PER DOCUMENT FROM PNSY CODE 980, KITTERY ME

SATISFACTORY TO DATE: 05/09/16

DES DWH | DRW CHG | CHK DWH

PM/DM: NATHAN LIBBY

BRANCH MANAGER: NATHAN MAHER

FEAD/PM&E: AMIN BAHROUR

FIRE PROTECTION: N/A

DEPARTMENT OF THE NAVY
NAVAL FACILITIES ENGINEERING COMMAND
PUBLIC WORKS DEPARTMENT - MAINE

NAVAL FACILITIES ENGINEERING COMMAND ~ MID-ATLANTIC
NAVAL SHIPYARD - PORTSMOUTH, NH

PORTSMOUTH NAVAL SHIPYARD

KITTERY, MAINE

STRUCTURAL REPAIRS
AT BERTHS 11A, 11B AND 11C

BULKHEAD PLAN AND ELEVATION - SHEET 3 OF 3

EPROJECT NO.: 1356489

CONSTR. CONTR. NO. N40085-XX-C-XXXX

NAVFAC DRAWING NO. 12716067

SHEET 71 OF 144

S-106 | FP2-16-707

DRAWFORM REVISION: 10 OCTOBER 2014

FILE NAME: S:\1794\Active\179410203\TP-104A PNSY Lifting Study\TP-104A PNSY Lifting Study\02 CADD\08 Structural\FP2-16-707.dwg LAYOUT NAME: BULKHEAD PLAN AND ELEVATION - SHEET 3 OF 3 PLOTTED: Friday, May 13, 2016 - 2:44pm USER: cgoodridge

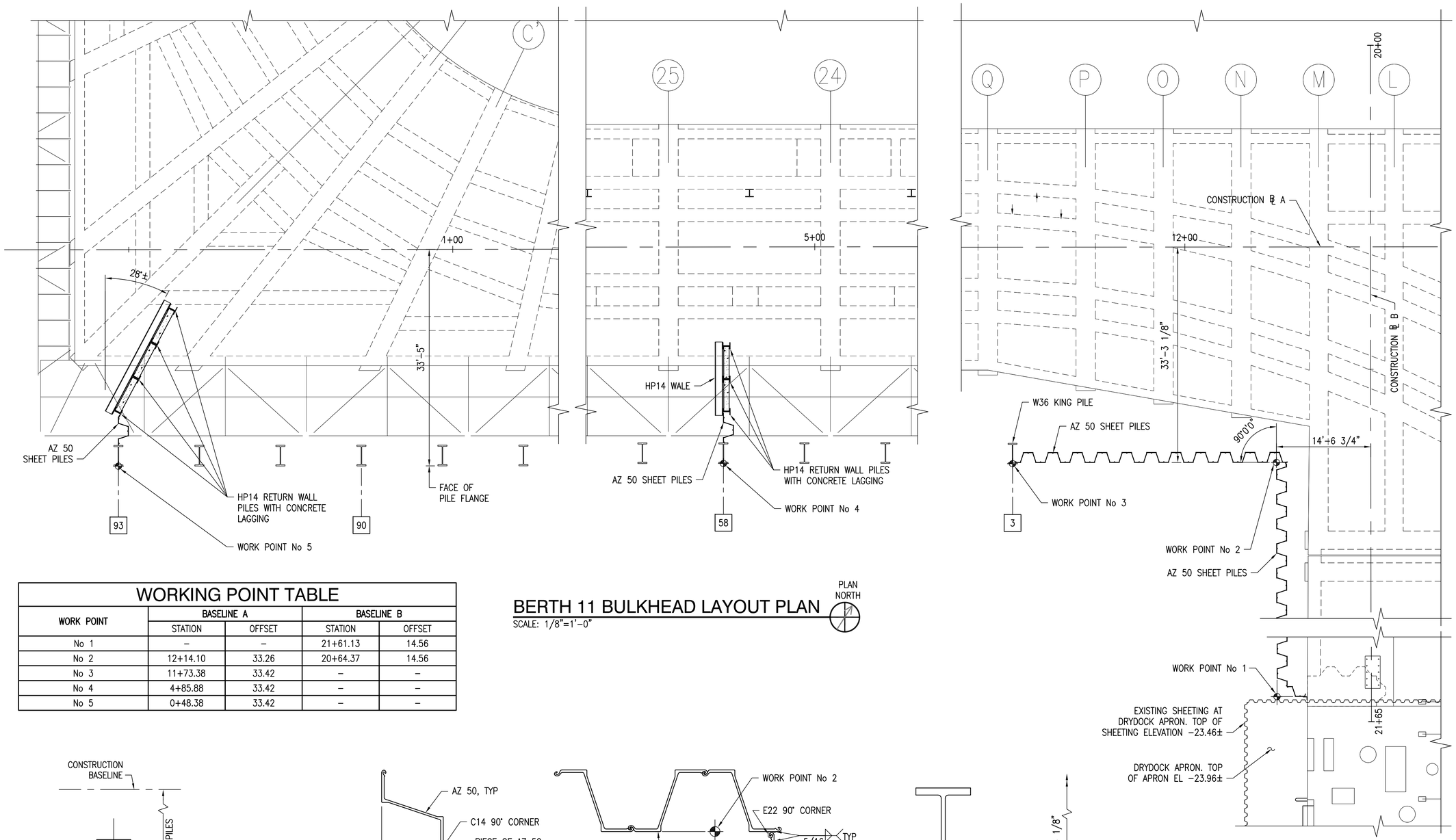

BERTH 11 BULKHEAD LAYOUT PLAN

SCALE: 1/8"=1'-0"

PLAN NORTH

WORKING POINT TABLE

WORK POINT	BASELINE A		BASELINE B	
	STATION	OFFSET	STATION	OFFSET
No 1	–	–	21+61.13	14.56
No 2	12+14.10	33.26	20+64.37	14.56
No 3	11+73.38	33.42	–	–
No 4	4+85.88	33.42	–	–
No 5	0+48.38	33.42	–	–

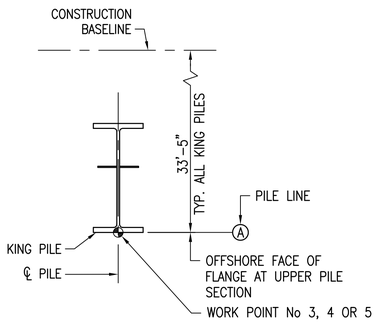

DETAIL - KING PILE WORKING POINT (A1)

SCALE: 1/2"=1'-0"

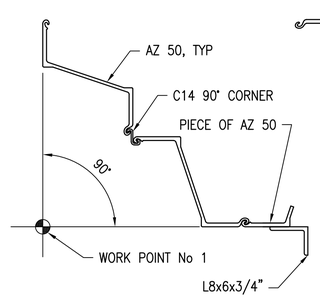

WORK POINT 1

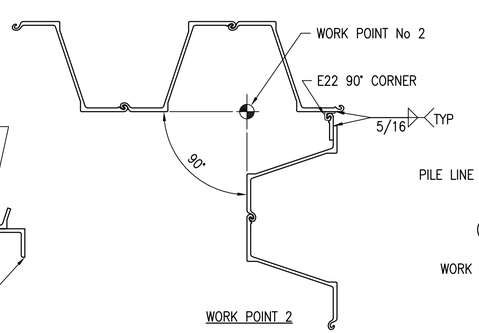

WORK POINT 2

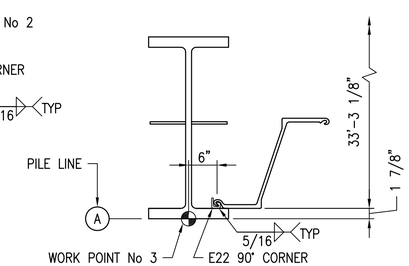

WORK POINT 3

DETAIL - SHEET PILE WORKING POINTS (A2)

SCALE: 3/4"=1'-0"

LEGEND:

WORK POINT

3/4"=1'-0" 1' 0' 1' 2' 4'

1/2"=1'-0" 4' 3' 2' 1' 0 4'

GRAPHIC SCALE

1/8"=1'-0" 4' 0 4' 8' 12' 16'

CHECK GRAPHIC SCALE BEFORE USING

SYM	DESCRIPTION	DATE	APPR

NAVFAC

DONALD W. HARVIE CIVIL No. 31070 REGISTERED PROFESSIONAL ENGINEER

3/7/16

SEAL

MN FST A JOINT VENTURE

A/E INFO

APPROVED David W. Greenfield

FOR COMMANDER NAVFAC

ACTIVITY: PER DOCUMENT FROM PNSY CODE 980, KITTERY ME

SATISFACTORY TO DATE: 05/09/16

DES DWH DRW CHG CHK DWH

PM/DM: NATHAN LIBBY

BRANCH MANAGER: NATHAN MAHER

FEAD/PM&E: AMIN BAHROUR

FIRE PROTECTION: N/A

DEPARTMENT OF THE NAVY
NAVAL FACILITIES ENGINEERING COMMAND
NAVAL FACILITIES ENGINEERING COMMAND ~ MID-ATLANTIC
PUBLIC WORKS DEPARTMENT – MAINE
NAVAL SHIPYARD – PORTSMOUTH, NH
PORTSMOUTH NAVAL SHIPYARD
KITTERY, MAINE

STRUCTURAL REPAIRS AT BERTHS 11A, 11B AND 11C

BULKHEAD LAYOUT PLAN

EPROJECT NO.: 1356489

CONSTR. CONTR. NO. N40085-XX-C-XXXX

NAVFAC DRAWING NO. 12716068

SHEET 72 OF 144

S-107 FP2-16-708

DRAWFORM REVISION: 10 OCTOBER 2014

FILE NAME: S:\1794\Active\179410203\TP-104A PNSY Lifting Study\TP-104A PNSY Lifting Study\02 CADD\08 Structural\FP2-16-708.dwg LAYOUT NAME: BULKHEAD LAYOUT PLAN PLOTTED: Friday, May 13, 2016 - 2:45pm USER: cgoodridge

LIMITS OF CRANE TEST AREA FROM BENT W TO BENT J

6'x6' CONCRETE DECK REPLACEMENT WITH 36" DIA FRAME AND COVER AT FILL PLACEMENT OPENING TYPICAL

RELOCATED DECK DRAIN, TYP

CONCRETE DECK AT SUPPORT PILE INSTALLATION OPENING TYPICAL

EXISTING DECK DRAIN TO REMAIN OR BE REINSTALLED, TYP

CONSTRUCTION ℄ A

MATCH LINE A-A SEE SHEET S-109

11+00

12+00

20+00

21+00

MP

VALVE

FW

EXISTING 4" WHEELER LINE

EXISTING BOLLARDS TO REMAIN

4" DIA DRAIN, TYP

A1 S-108

CONCRETE BULKHEAD CAP

TIMBER DECK

42" CLEAT

12" CONCRETE CURB

FOUNDATION FOR LIVING BARGE BROW No 1

A1 S-508

3

50 TON BOLLARD

℄ LADDER No 1

ACCESS COVER ABOVE EXISTING HP AIR VALVE, TYP. SEE SHEET S-516 FOR DETAILS

CONSTRUCTION ℄ B

EXISTING 4" WHEELER

REINSTALL EXISTING TIDE BOARD. CONFIRM LOCATION WITH THE CONTRACTING OFFICER PRIOR TO INSTALLING

STA 21+62.40

EXISTING CAPSTAN FOUNDATION

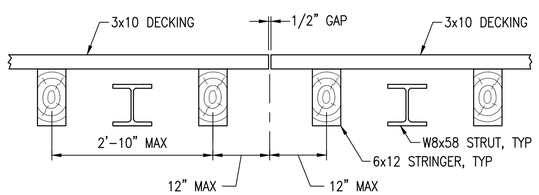

SECTION A1
SCALE: 3/4"=1'-0" S-108

DECK PLAN
SCALE: 1"=10'

PLAN NORTH

LEGEND:

EXISTING FEATURES SHOWN THUS

FEATURES TO BE PROVIDED UNDER THIS CONTRACT SHOWN THUS

GRAPHIC SCALE

1"=10' 10' 0 10' 20'

CHECK GRAPHIC SCALE BEFORE USING

APPR | DATE | DESCRIPTION | STM

NAVFAC

COMMONWEALTH OF MASSACHUSETTS
DAVID J. MELO
CIVIL
No. 48632
REGISTERED PROFESSIONAL ENGINEER
3/7/16
SEAL

MNFST
A JOINT VENTURE
A/E INFO

APPROVED: David W. Grunfeld
FOR COMMANDER NAVFAC

ACTIVITY:
PER DOCUMENT FROM PNSY
CODE 980, KITTERY ME

SATISFACTORY TO DATE: 06/09/16

DES DJM | DRW CHG | CHK DJM

PM/DM: NATHAN LIBBY

BRANCH MANAGER: NATHAN MAHER

FEAD/PM&E: AMIN BAHROUR

FIRE PROTECTION: N/A

DEPARTMENT OF THE NAVY
NAVAL FACILITIES ENGINEERING COMMAND
PUBLIC WORKS DEPARTMENT - MAINE
PORTSMOUTH NAVAL SHIPYARD

NAVAL FACILITIES ENGINEERING COMMAND – MID-ATLANTIC
NAVAL SHIPYARD – PORTSMOUTH, NH
KITTERY, MAINE

STRUCTURAL REPAIRS AT BERTHS 11A, 11B AND 11C

DECK PLAN – SHEET 1 OF 4

EPROJECT NO.: 1356489

CONSTR. CONTR. NO. N40085-XX-C-XXXX

NAVFAC DRAWING NO. 12716069

SHEET 73 OF 144

S-108 | FP2-16-709

DRAWFORM REVISION: 10 OCTOBER 2014

FILE NAME: S:\1794\Active\179410203\v\TP-104A PNSY Lifting Study\TP-104A PNSY Lifting Study\02 CAD\08 Structure\FP2-16-712.dwg LAYOUT NAME: DECK PLAN – SHEET 1 OF 4 PLOTTED: Sunday, May 22, 2016 – 3:28pm USER: cgoodridge

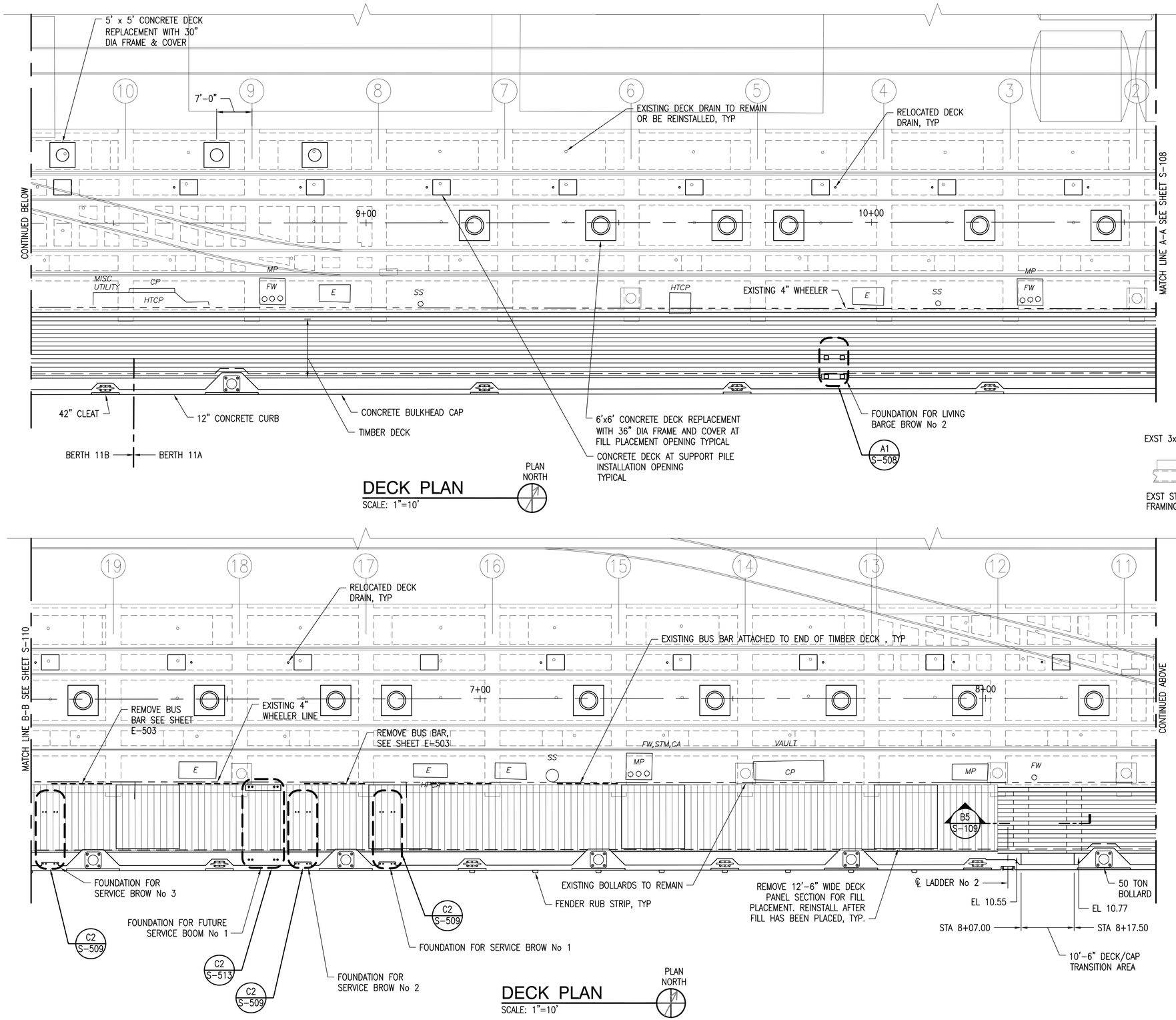

DECK PLAN
SCALE: 1"=10'

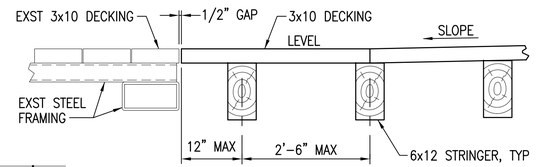

SECTION
SCALE: 3/4"=1'-0" S-109 B5

LEGEND:

EXISTING FEATURES SHOWN THUS

FEATURES TO BE PROVIDED UNDER THIS CONTRACT SHOWN THUS

GRAPHIC SCALE

1"=10' 10' 0 10' 20'

CHECK GRAPHIC SCALE BEFORE USING

APPR | DATE | DESCRIPTION | SYM

NAVFAC

COMMONWEALTH OF MASSACHUSETTS
DAVID J. MELO
CIVIL
No. 48692
REGISTERED PROFESSIONAL ENGINEER
3/7/16
SEAL

MN FST
A JOINT VENTURE
A/E INFO

APPROVED
David W. Trumfield
FOR COMMANDER NAVFAC

ACTIVITY:
PER DOCUMENT FROM PNSY
CODE 980, KITTERY ME

SATISFACTORY TO DATE: 05/09/16

DES: DJM | DRW: CHG | CHK: DJM

PM/DM: NATHAN LIBBY

BRANCH MANAGER: NATHAN MAHER

FEAD/PM&E: AMIN BAHROUR

FIRE PROTECTION: N/A

DEPARTMENT OF THE NAVY
NAVAL FACILITIES ENGINEERING COMMAND
PUBLIC WORKS DEPARTMENT - MAINE
PORTSMOUTH NAVAL SHIPYARD

NAVAL FACILITIES ENGINEERING COMMAND – MID-ATLANTIC
NAVAL SHIPYARD – PORTSMOUTH, NH
KITTERY, MAINE

STRUCTURAL REPAIRS
AT BERTHS 11A, 11B AND 11C

DECK PLAN – SHEET 2 OF 4

EPROJECT NO.: 1356489

CONSTR. CONTR. NO.
N40085-XX-C-XXXX

NAVFAC DRAWING NO.
12716070

SHEET 74 OF 144

S-109 | FP2-16-710

DRAWFORM REVISION: 10 OCTOBER 2014

FILE NAME: S:\1794\Active\179410203\VTP-104A PNSY Lifting Study\TP-104A PNSY Lifting Study\02 CAD\08 Structural\FP2-16-712.dwg LAYOUT NAME: DECK PLAN – SHEET 2 OF 4 PLOTTED: Friday, May 13, 2016 – 2:45pm USER: cgoodridge

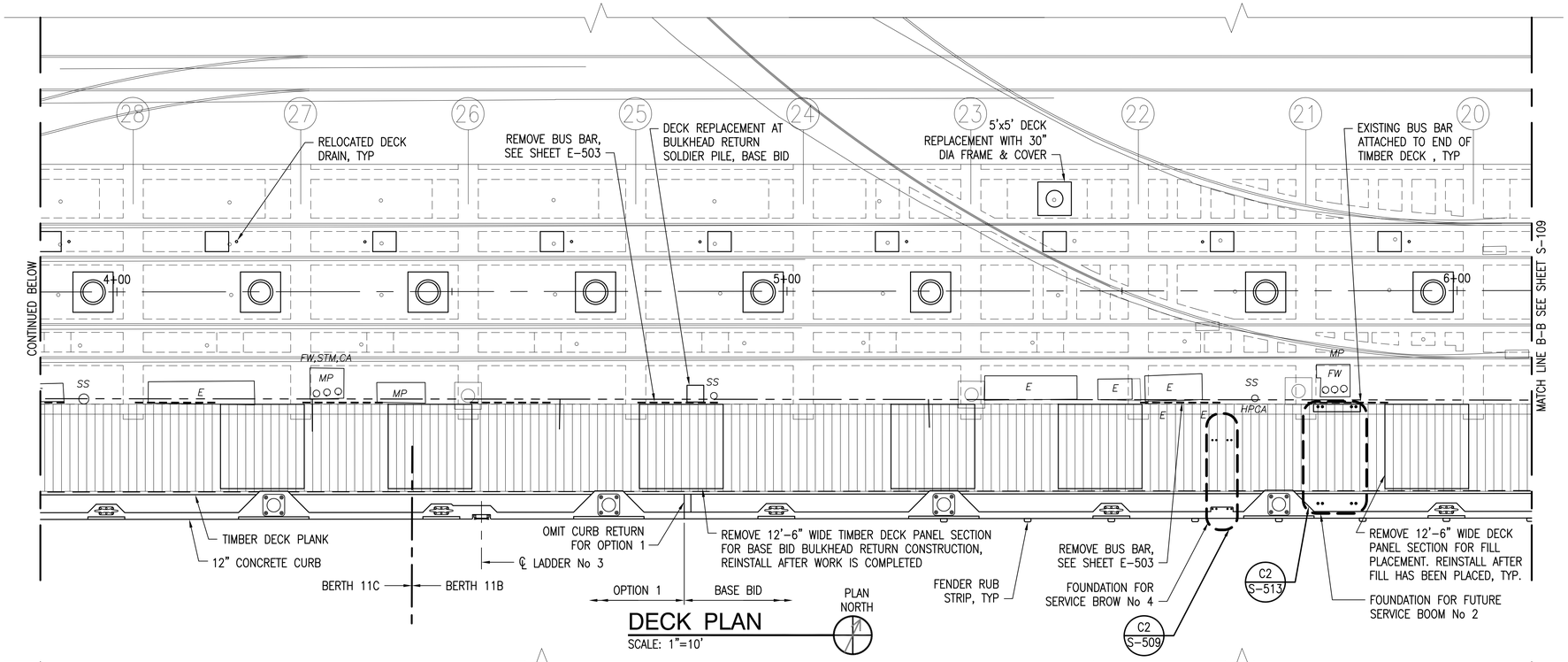

LEGEND:

EXISTING FEATURES SHOWN THUS

FEATURES TO BE PROVIDED UNDER THIS CONTRACT SHOWN THUS

GRAPHIC SCALE

1"=10' 10' 0 10' 20'

CHECK GRAPHIC SCALE BEFORE USING

NO.	DESCRIPTION	DATE	APPR

NAVFAC

COMMONWEALTH OF MASSACHUSETTS
DAVID J. MELO
CIVIL
No. 48692
REGISTERED PROFESSIONAL ENGINEER
3/7/16
SEAL

MNFST
A JOINT VENTURE
A/E INFO

APPROVED
David W. Kruegfield
FOR COMMANDER NAVFAC

ACTIVITY:
PER DOCUMENT FROM PNSY
CODE 980, KITTERY ME

SATISFACTORY TO DATE: 05/09/16

DES: DJM | DRW: CHG | CHK: DJM

PM/DM: NATHAN LIBBY

BRANCH MANAGER: NATHAN MAHER

FEAD/PM&E: AMIN BAHROUR

FIRE PROTECTION: N/A

DEPARTMENT OF THE NAVY
NAVAL FACILITIES ENGINEERING COMMAND
PUBLIC WORKS DEPARTMENT - MAINE
PORTSMOUTH NAVAL SHIPYARD

NAVAL FACILITIES ENGINEERING COMMAND
NAVAL SHIPYARD - PORTSMOUTH, NH
KITTERY, MAINE

STRUCTURAL REPAIRS AT BERTHS 11A, 11B AND 11C

DECK PLAN - SHEET 3 OF 4

EPROJECT NO.: 1356489

CONSTR. CONTR. NO.
N40085-XX-C-XXXX

NAVFAC DRAWING NO.
12716071

SHEET 75 OF 144

S-110 | FP2-16-711

DRAWFORM REVISION: 10 OCTOBER 2014

FILE NAME: S:\179A\Active\179410203\VP-104A PNSY Lifting Study\VP-104A PNSY Lifting Study\02 CADD\08 Structural\FP2-16-712.dwg LAYOUT NAME: DECK PLAN - SHEET 3 OF 4 PLOTTED: Friday, May 13, 2016 - 2:46pm USER: cgoodridge

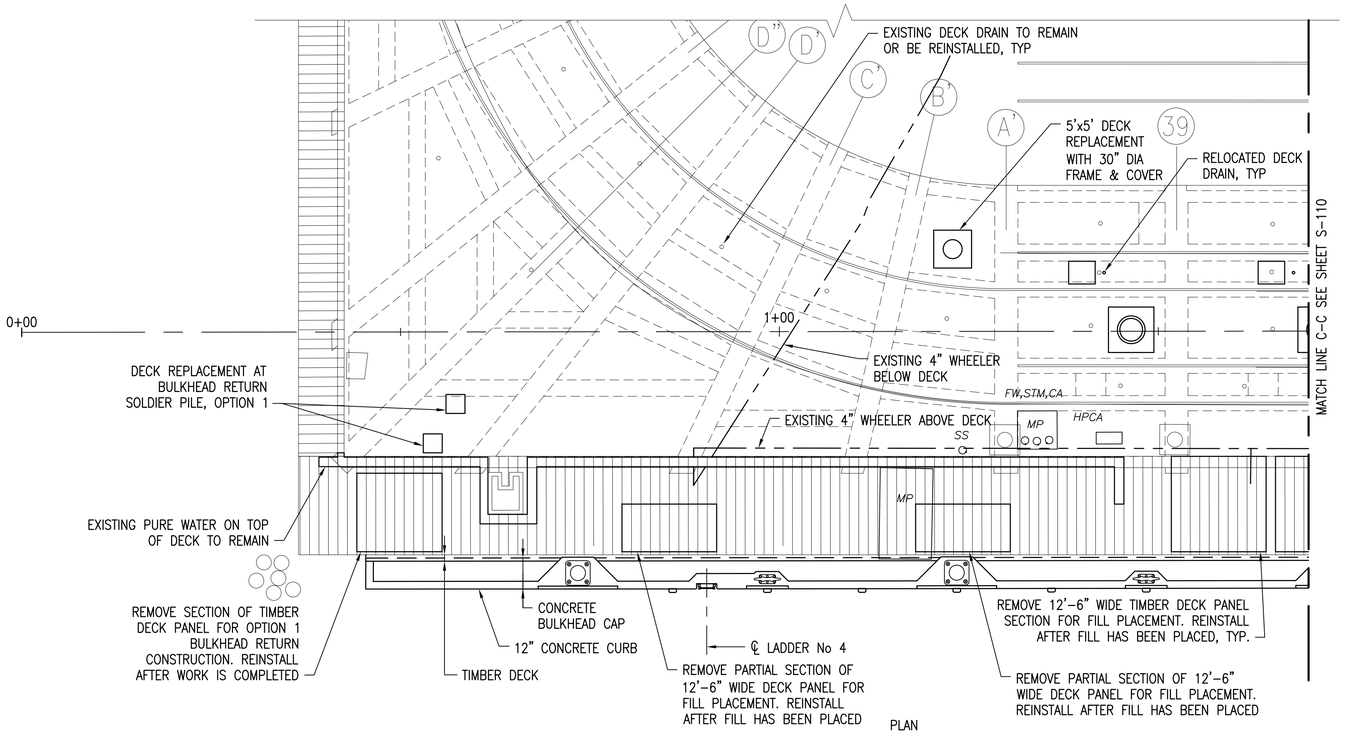

DECK PLAN

SCALE: 1"=10'

LEGEND::

EXISTING FEATURES SHOWN THUS

FEATURES TO BE PROVIDED UNDER THIS CONTRACT SHOWN THUS

GRAPHIC SCALE

1"=10' 10' 0 10' 20'

CHECK GRAPHIC SCALE BEFORE USING

SYM	DESCRIPTION	DATE	APPR

NAVFAC

COMMONWEALTH OF MASSACHUSETTS DAVID J. MELO CIVIL No. 48692 REGISTERED PROFESSIONAL ENGINEER

3/7/16

SEAL

MN FST A JOINT VENTURE

A/E INFO

APPROVED David W. Greenfield

FOR COMMANDER NAVFAC

ACTIVITY: PER DOCUMENT FROM PNSY CODE 980, KITTERY ME

SATISFACTORY TO DATE: 05/09/16

DES DJM DRW CHG CHK DJM

PM/DM: NATHAN LIBBY

BRANCH MANAGER: NATHAN MAHER

FEAD/PM&E: AMIN BAHROUR

FIRE PROTECTION: N/A

DEPARTMENT OF THE NAVY
NAVAL FACILITIES ENGINEERING COMMAND
NAVAL FACILITIES ENGINEERING COMMAND ~ MID-ATLANTIC
PUBLIC WORKS DEPARTMENT ~ MAINE
NAVAL SHIPYARD ~ PORTSMOUTH, NH

PORTSMOUTH NAVAL SHIPYARD

KITTERY, MAINE

STRUCTURAL REPAIRS AT BERTHS 11A, 11B AND 11C

DECK PLAN ~ SHEET 4 OF 4

EPROJECT NO.: 1356489

CONSTR. CONTR. NO. N40085-XX-C-XXXX

NAVFAC DRAWING NO. 12716072

SHEET 76 OF 144

S-111 FP2-16-712

DRAWFORM REVISION: 10 OCTOBER 2014

FILE NAME: S:\1794\Active\179410203\TP-104A PNSY Lifting Study\TP-104A PNSY Lifting Study\02 CADD\08 Structural\FP2-16-712.dwg LAYOUT NAME: DECK PLAN ~ SHEET 4 OF 4 PLOTTED: Friday, May 13, 2016 ~ 2:46pm USER: cgoodridge

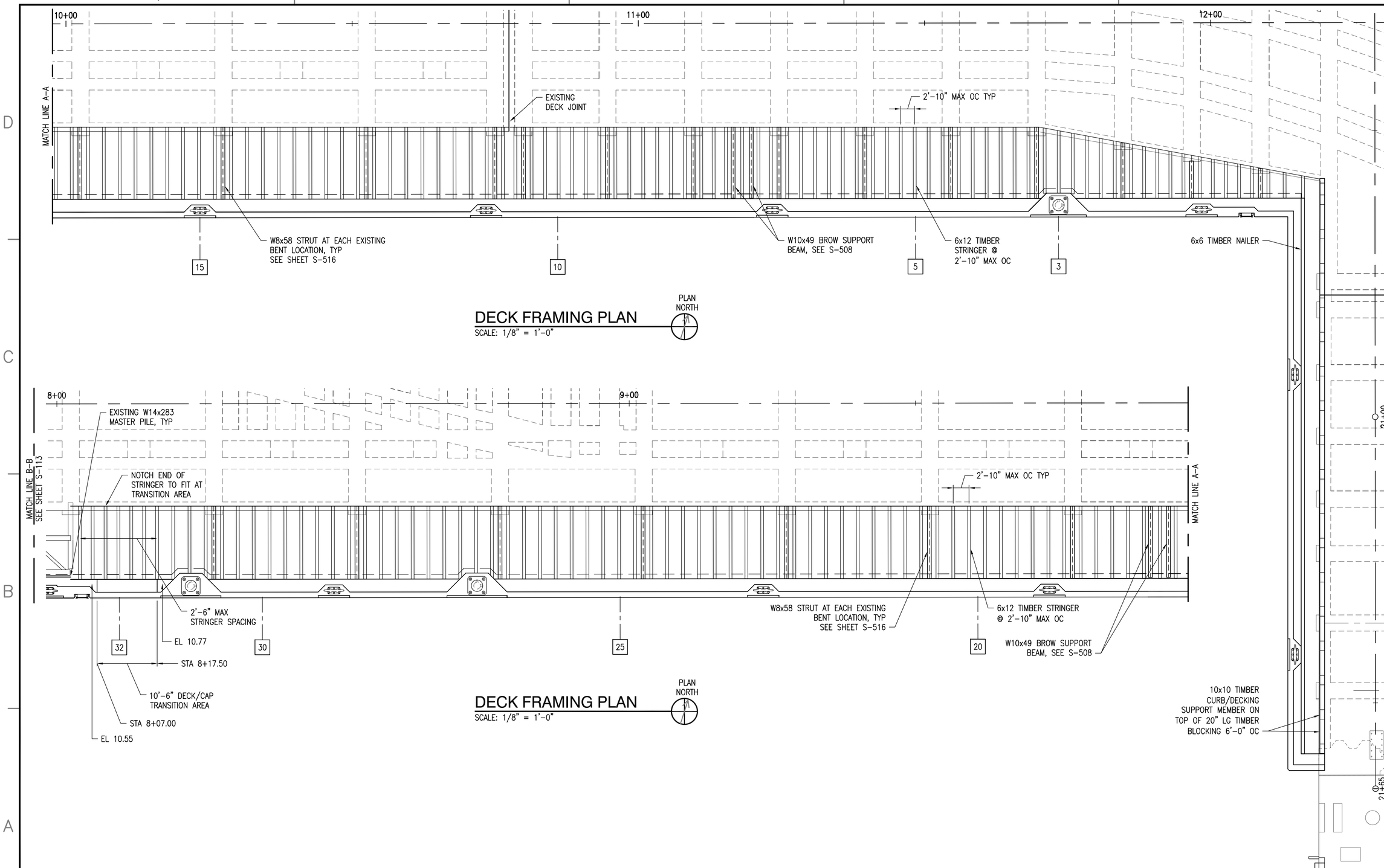

DECK FRAMING PLAN
SCALE: 1/8" = 1'-0"

DECK FRAMING PLAN
SCALE: 1/8" = 1'-0"

GRAPHIC SCALE
1/8"=1'-0"
4' 0 4' 8' 12' 16'
CHECK GRAPHIC SCALE BEFORE USING

SYM	DESCRIPTION	DATE	APPR

NAVFAC

COMMONWEALTH OF MASSACHUSETTS
DAVID J. MELO
CIVIL
No. 48692
REGISTERED PROFESSIONAL ENGINEER
3/7/16
SEAL

MN FST
A JOINT VENTURE
A/E INFO

APPROVED
David W. Greenfield
FOR COMMANDER NAVFAC

ACTIVITY:
PER DOCUMENT FROM PNSY CODE 980, KITTERY ME

SATISFACTORY TO DATE: 05/09/16
DES DJM DRW CHG CHK DJM
PM/DM: NATHAN LIBBY
BRANCH MANAGER: NATHAN MAHER
FEAD/PM&E: AMIN BAHROUR
FIRE PROTECTION: N/A

DEPARTMENT OF THE NAVY
NAVAL FACILITIES ENGINEERING COMMAND
PUBLIC WORKS DEPARTMENT – MAINE
NAVAL FACILITIES ENGINEERING COMMAND ~ MID-ATLANTIC
NAVAL SHIPYARD – PORTSMOUTH, NH
PORTSMOUTH NAVAL SHIPYARD
KITTERY, MAINE

STRUCTURAL REPAIRS
AT BERTHS 11A, 11B AND 11C

DECK FRAMING PLAN – SHEET 1 OF 3

EPROJECT NO.: 1356489
CONSTR. CONTR. NO. N40085-XX-C-XXXX
NAVFAC DRAWING NO. 12716073
SHEET 77 OF 144
S-112 FP2-16-713
DRAWFORM REVISION: 10 OCTOBER 2014

FILE NAME: S:\1794\Active\179410203\\TP-104A PNSY Lifting Study\TP-104A PNSY Lifting Study\02 CADD\08 Structural\FP2-16-715.dwg LAYOUT NAME: DECK FRAMING PLAN – SHEET 1 OF 3 PLOTTED: Friday, May 13, 2016 – 2:46pm USER: cgoodridge

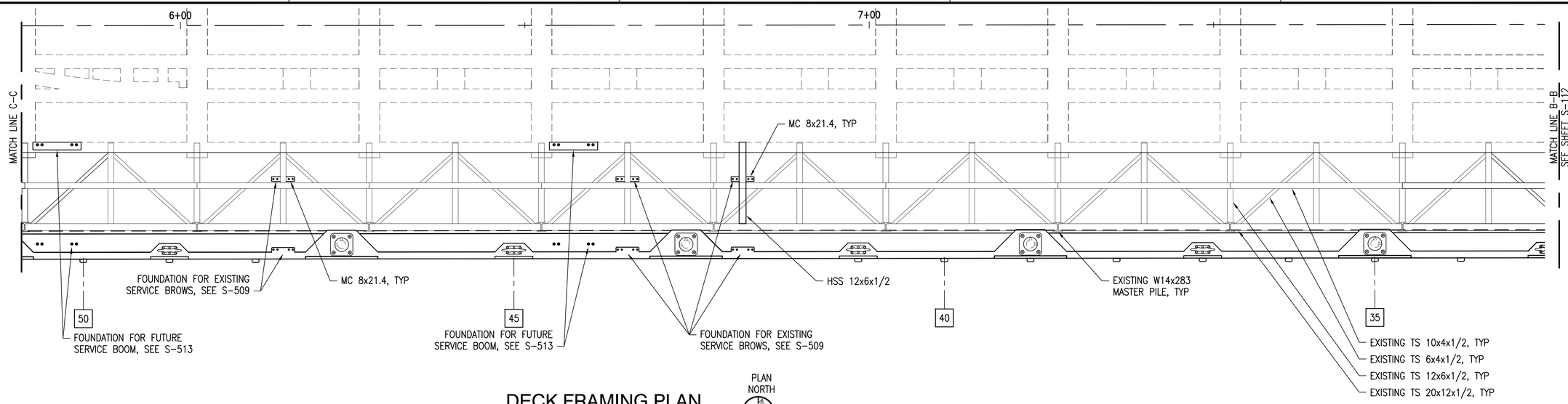

DECK FRAMING PLAN

SCALE: 1/8" = 1'–0"

PLAN NORTH

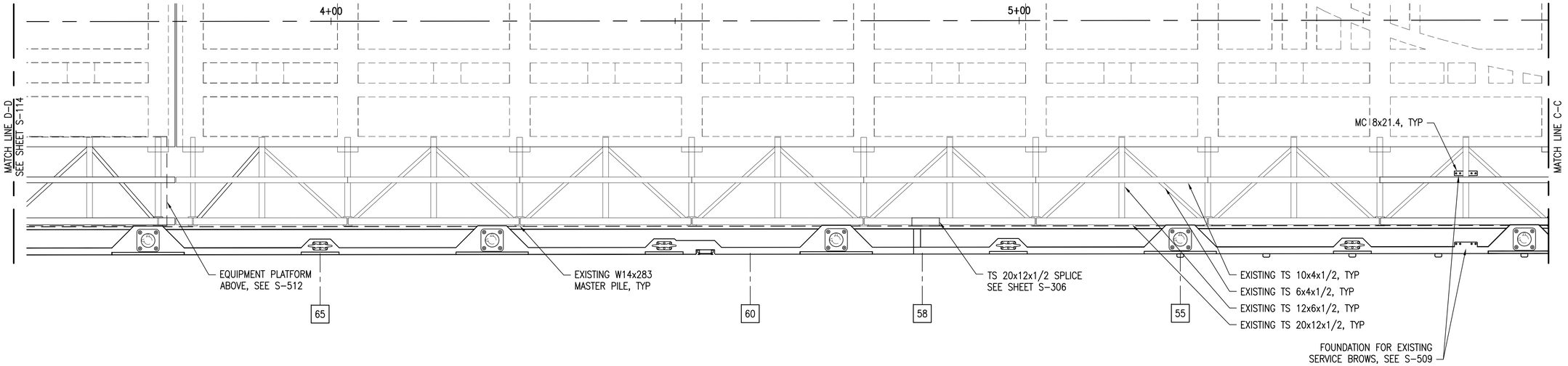

DECK FRAMING PLAN

SCALE: 1/8" = 1'–0"

PLAN NORTH

GRAPHIC SCALE

1/8"=1'–0"

4' 0 4' 8' 12' 16'

CHECK GRAPHIC SCALE BEFORE USING

APPR	DATE	DESCRIPTION	MK

NAVFAC

COMMONWEALTH OF MASSACHUSETTS
DAVID J. MELO
CIVIL
No. 48692
REGISTERED PROFESSIONAL ENGINEER
3/7/16
SEAL

MNFST
A JOINT VENTURE
A/E INFO

APPROVED
David W. Thurfield
FOR COMMANDER NAVFAC

ACTIVITY:
PER DOCUMENT FROM PNSY
CODE 980, KITTERY ME

SATISFACTORY TO DATE: 05/09/16

DES: DJM DRW: CHG CHK: DJM

PM/DM: NATHAN LIBBY

BRANCH MANAGER: NATHAN MAHER

FEAD/PM&E: AMIN BAHROUR

FIRE PROTECTION: N/A

DEPARTMENT OF THE NAVY
NAVAL FACILITIES ENGINEERING COMMAND
PUBLIC WORKS DEPARTMENT – MAINE
PORTSMOUTH NAVAL SHIPYARD

NAVAL FACILITIES ENGINEERING COMMAND – MID-ATLANTIC
NAVAL SHIPYARD – PORTSMOUTH, NH

KITTERY, MAINE

STRUCTURAL REPAIRS AT BERTHS 11A, 11B AND 11C

DECK FRAMING PLAN – SHEET 2 OF 3

EPROJECT NO.: 1356489

CONSTR. CONTR. NO.
N40085–XX–C–XXXX

NAVFAC DRAWING NO.
12716074

SHEET 78 OF 144

S-113 FP2-16-714

DRAWFORM REVISION: 10 OCTOBER 2014

FILE NAME: S:\1794\Active\1794102031\TP-104A PNSY Lifting Study\TP-104A PNSY Lifting Study\02 CAD\08 Structural\FP2-16-715.dwg LAYOUT NAME: DECK FRAMING PLAN – SHEET 2 OF 3 PLOTTED: Friday, May 13, 2016 – 2:46pm USER: cgoodridge

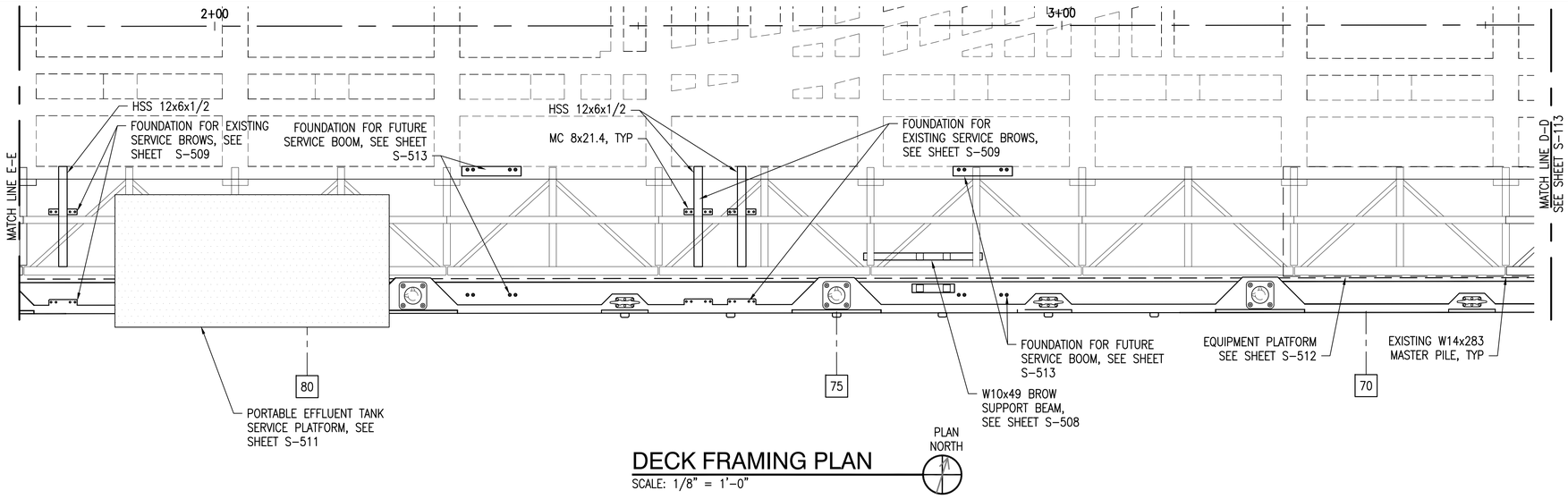

DECK FRAMING PLAN

SCALE: 1/8" = 1'-0"

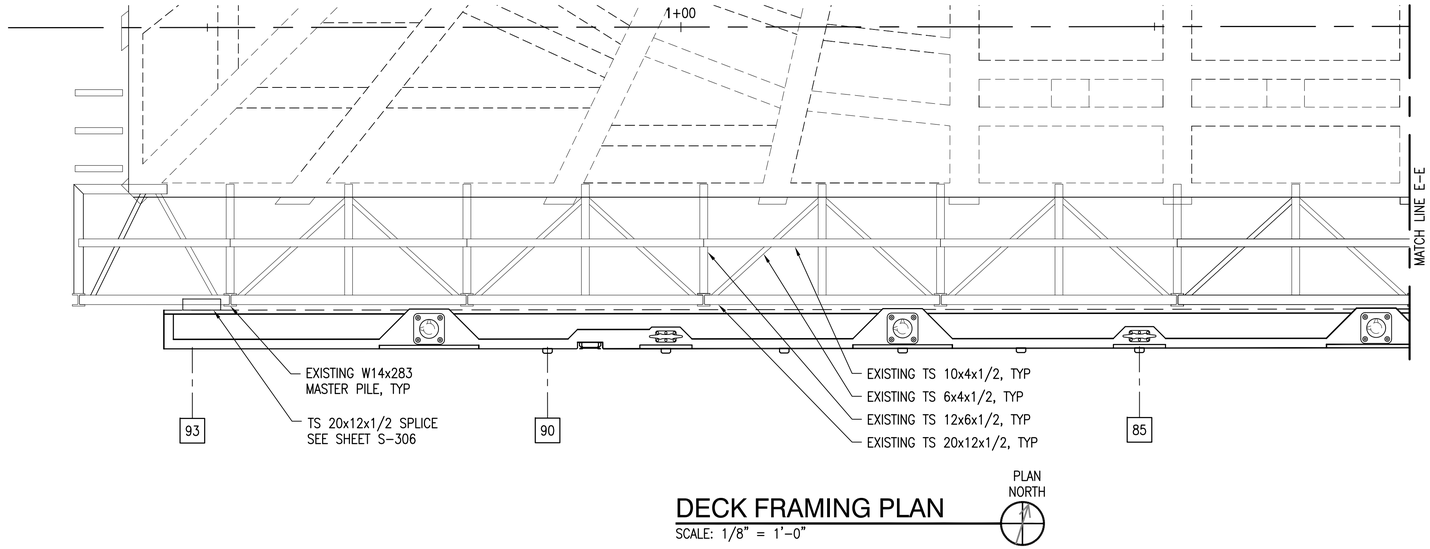

DECK FRAMING PLAN

SCALE: 1/8" = 1'-0"

GRAPHIC SCALE

1/8"=1'-0" 4' 0 4' 8' 12' 16'

CHECK GRAPHIC SCALE BEFORE USING

APPR	DATE	DESCRIPTION	STA

NAVFAC

COMMONWEALTH OF MASSACHUSETTS — DAVID J. MELO CIVIL No. 48692 — REGISTERED PROFESSIONAL ENGINEER — 3/7/16 — SEAL

MNFST A JOINT VENTURE — A/E INFO

APPROVED — David W. Trumfield — FOR COMMANDER NAVFAC

ACTIVITY: PER DOCUMENT FROM PNSY CODE 980, KITTERY, ME

SATISFACTORY TO — DATE: 05/09/16

DES	DJM	DRW	CHG	CHK	DJM

PM/DM: NATHAN LIBBY

BRANCH MANAGER: NATHAN MAHER

FEAD/PM&E: AMIN BAHROUR

FIRE PROTECTION: N/A

DEPARTMENT OF THE NAVY
NAVAL FACILITIES ENGINEERING COMMAND
PUBLIC WORKS DEPARTMENT - MAINE
PORTSMOUTH NAVAL SHIPYARD

NAVAL FACILITIES ENGINEERING COMMAND - MID-ATLANTIC
NAVAL SHIPYARD - PORTSMOUTH, NH

STRUCTURAL REPAIRS AT BERTHS 11A, 11B AND 11C

KITTERY, MAINE

DECK FRAMING PLAN - SHEET 3 OF 3

EPROJECT NO.: 1356489

CONSTR. CONTR. NO. N40085-XX-C-XXXX

NAVFAC DRAWING NO. 12716075

SHEET 79 OF 144

S-114 | FP2-16-715

DRAWFORM REVISION: 10 OCTOBER 2014

FILE NAME: S:\1794\Active\179410203\1\TP-104A PNSY Lifting Study\TP-104A PNSY Lifting Study\02 CADD\08 Structural\FP2--16--715.dwg LAYOUT NAME: DECK FRAMING PLAN - SHEET 3 OF 3 PLOTTED: Friday, May 13, 2016 - 2:47pm USER: cgoodridge

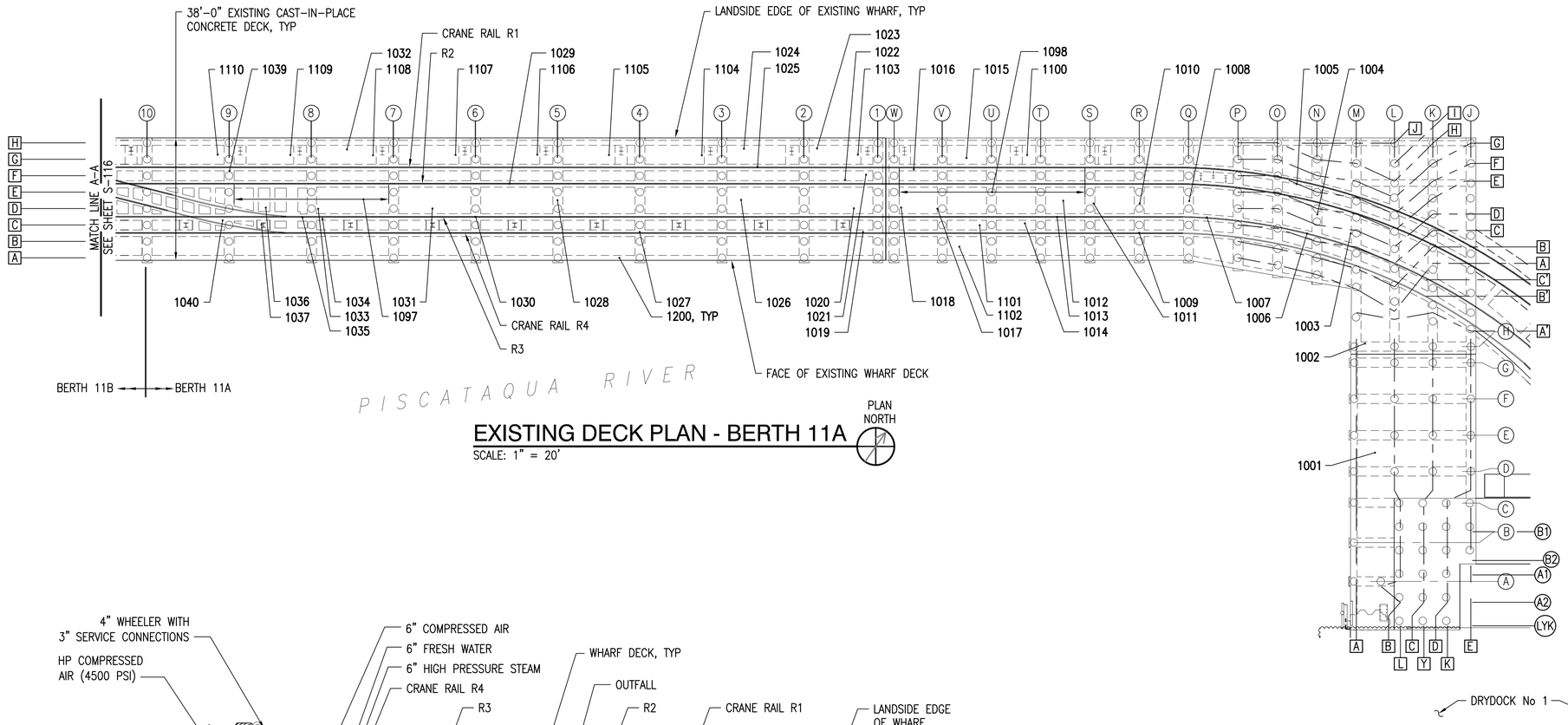

EXISTING DECK PLAN - BERTH 11A

SCALE: 1" = 20'

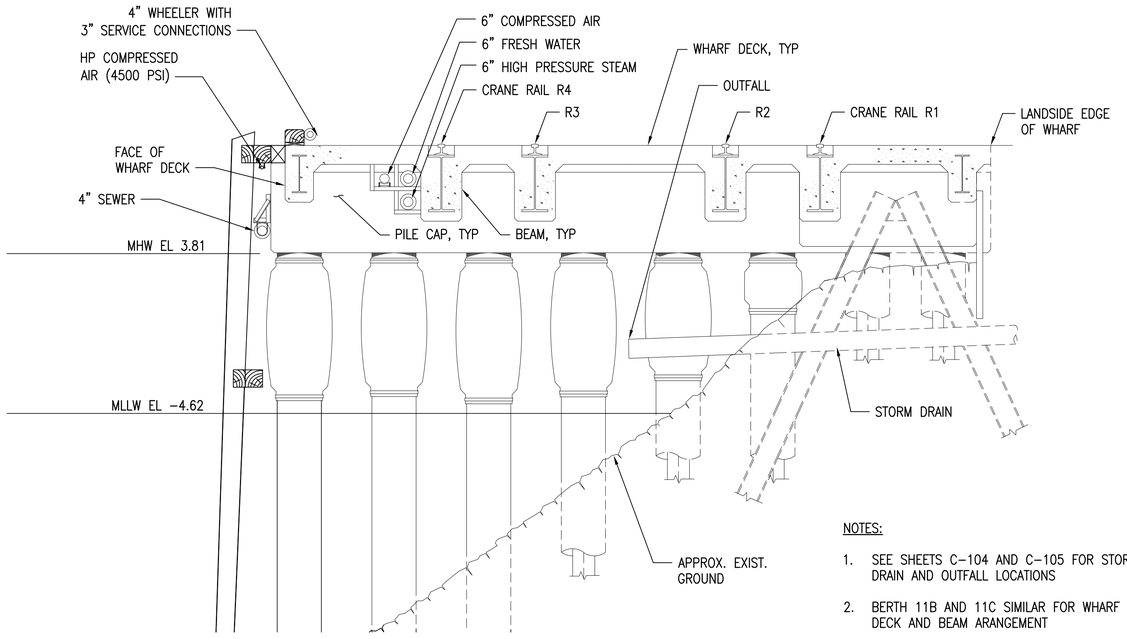

NOTES:

1. SEE SHEETS C-104 AND C-105 FOR STORM DRAIN AND OUTFALL LOCATIONS
2. BERTH 11B AND 11C SIMILAR FOR WHARF DECK AND BEAM ARANGEMENT

EXISTING TYPICAL SECTION AT BERTH 11A

SCALE: 1/4" = 1'-0"

A1

NOTES:

1. SEE SHEET S-517 FOR REPAIR DETAILS.
2. SEE SHEET S-601 FOR DECK REPAIR SCHEDULES.
3. FENDERING NOT SHOWN FOR CLARITY.

LEGEND:

LYK A1 35 G'	BENT NUMBER
A	PILE ROW DESIGNATION
R1	RAIL IDENTIFICATION
1001	DECK REPAIR IDENTIFICATION NUMBER

GRAPHIC SCALE

1"=20' 20' 0 20' 40'

CHECK GRAPHIC SCALE BEFORE USING

SYM	DESCRIPTION	DATE	APPR

NAVFAC

MN FST A JOINT VENTURE

A/E INFO

APPROVED David W. Greenfield FOR COMMANDER NAVFAC

ACTIVITY: PER DOCUMENT FROM PNSY CODE 980, KITTERY ME

SATISFACTORY TO DATE: 05/09/16

DES MN DRW AMS CHK MN

PM/DM: NATHAN LIBBY

BRANCH MANAGER: NATHAN MAHER

FEAD/PM&E: AMIN BAHROUR

FIRE PROTECTION: N/A

DEPARTMENT OF THE NAVY
NAVAL FACILITIES ENGINEERING COMMAND
NAVAL FACILITIES ENGINEERING COMMAND ~ MID-ATLANTIC
PUBLIC WORKS DEPARTMENT - MAINE
NAVAL SHIPYARD - PORTSMOUTH, NH
PORTSMOUTH NAVAL SHIPYARD
KITTERY, MAINE

STRUCTURAL REPAIRS AT BERTHS 11A, 11B AND 11C

EXISTING DECK REPAIR PLAN - SHEET 1 OF 2

EPROJECT NO.: 1356489

CONSTR. CONTR. NO. N40085-XX-C-XXXX

NAVFAC DRAWING NO. 12716076

SHEET 80 OF 144

S-115 FP2-16-716

DRAWFORM REVISION: 10 OCTOBER 2014

FILE NAME: S:\1794\Active\179410203\r\TP-104A PNSY Lifting Study\TP-104A PNSY Lifting Study\02 CADD\08 Structural\FP2-16-716.dwg LAYOUT NAME: EXISTING DECK REPAIR PLAN - SHEET 1 OF 2 PLOTTED: Friday, May 13, 2016 - 2:47pm USER: cgoodridge

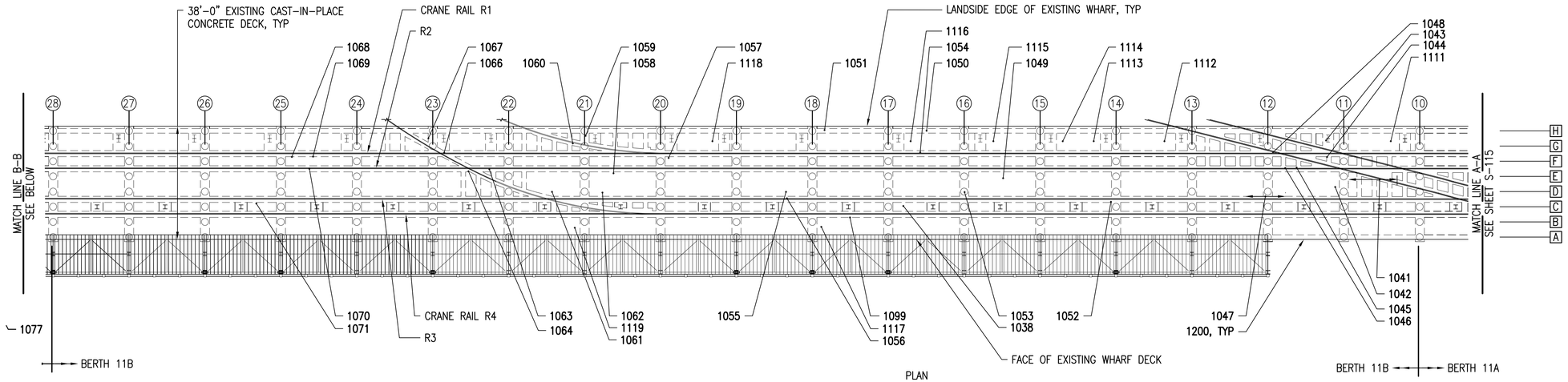

EXISTING DECK PLAN - BERTH 11B

SCALE: 1" = 20'

PLAN NORTH

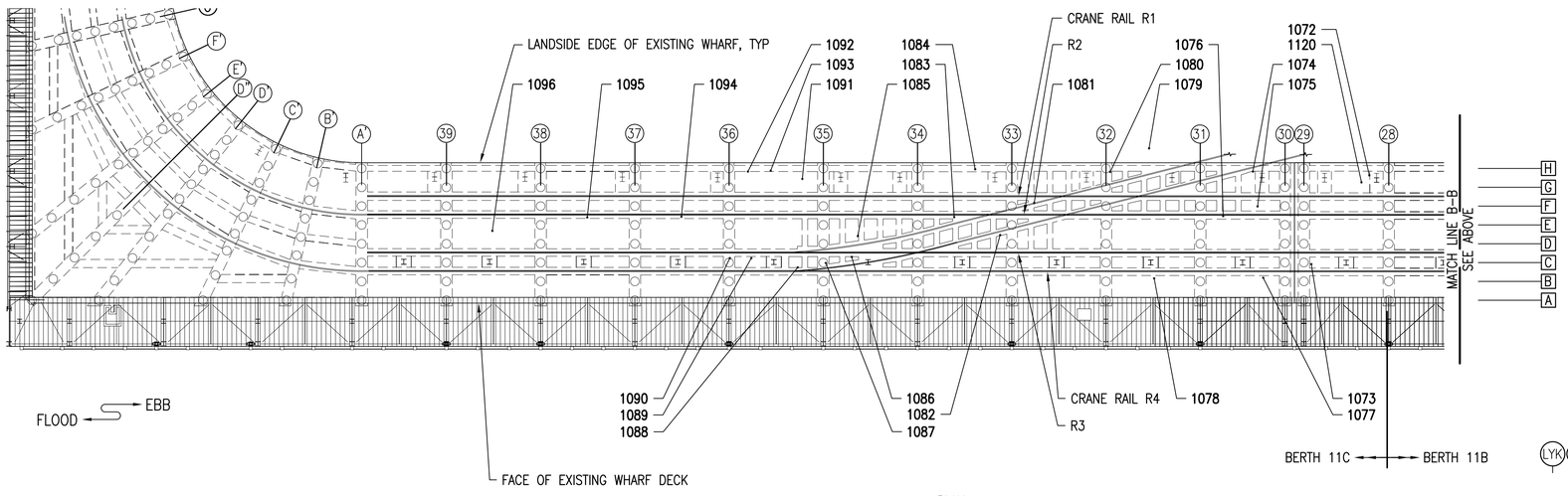

EXISTING DECK PLAN - BERTH 11C

SCALE: 1" = 20'

PLAN NORTH

NOTE:

1. SEE SHEET S-517 FOR REPAIR DETAILS.
2. SEE SHEET S-601 FOR DECK REPAIR SCHEDULES.
3. FENDERING NOT SHOWN FOR CLARITY.

LEGEND:

- LYK A1 35 G' — BENT NUMBER
- A — PILE ROW DESIGNATION
- R1 — RAIL IDENTIFICATION
- 1001 — REPAIR IDENTIFICATION NUMBER

GRAPHIC SCALE

1"=20' 20' 0 20' 40'

CHECK GRAPHIC SCALE BEFORE USING

APPR | DATE | DESCRIPTION | SYM

NAVFAC

COMMONWEALTH OF MASSACHUSETTS MARK NICOLAZZO 24614 REGISTERED PROFESSIONAL ENGINEER 5-13-16

SEAL

MNFST A JOINT VENTURE

A/E INFO

APPROVED David W. Trumfield FOR COMMANDER NAVFAC

ACTIVITY: PER DOCUMENT FROM PNSY CODE 980, KITTERY ME

SATISFACTORY TO DATE: 05/09/16

DES MN | DRW AMS | CHK MN

PM/DM: NATHAN LIBBY

BRANCH MANAGER: NATHAN MAHER

FEAD/PM&E: AMN BAHROUR

FIRE PROTECTION: N/A

DEPARTMENT OF THE NAVY
NAVAL FACILITIES ENGINEERING COMMAND
PUBLIC WORKS DEPARTMENT - MAINE
PORTSMOUTH NAVAL SHIPYARD

NAVAL FACILITIES ENGINEERING COMMAND – MID-ATLANTIC
NAVAL SHIPYARD – PORTSMOUTH, NH
KITTERY, MAINE

STRUCTURAL REPAIRS AT BERTHS 11A, 11B AND 11C

EXISTING DECK REPAIR PLAN – SHEET 2 OF 2

EPROJECT NO.: 1356489

CONSTR. CONTR. NO. N40085-XX-C-XXXX

NAVFAC DRAWING NO. 12716077

SHEET 81 OF 144

S-116 | FP2-16-717

DRAWFORM REVISION: 10 OCTOBER 2014

FILE NAME: S:\1794\Active\179410203\YLTP-104A PNSY Lifting Study\TP-104A PNSY Lifting Study\02 CAD\08 Structural\FP2-16-717.dwg LAYOUT NAME: EXISTING DECK REPAIR PLAN – SHEET 2 OF 2 PLOTTED: Friday, May 13, 2016 – 2:47pm USER: cgoodridge

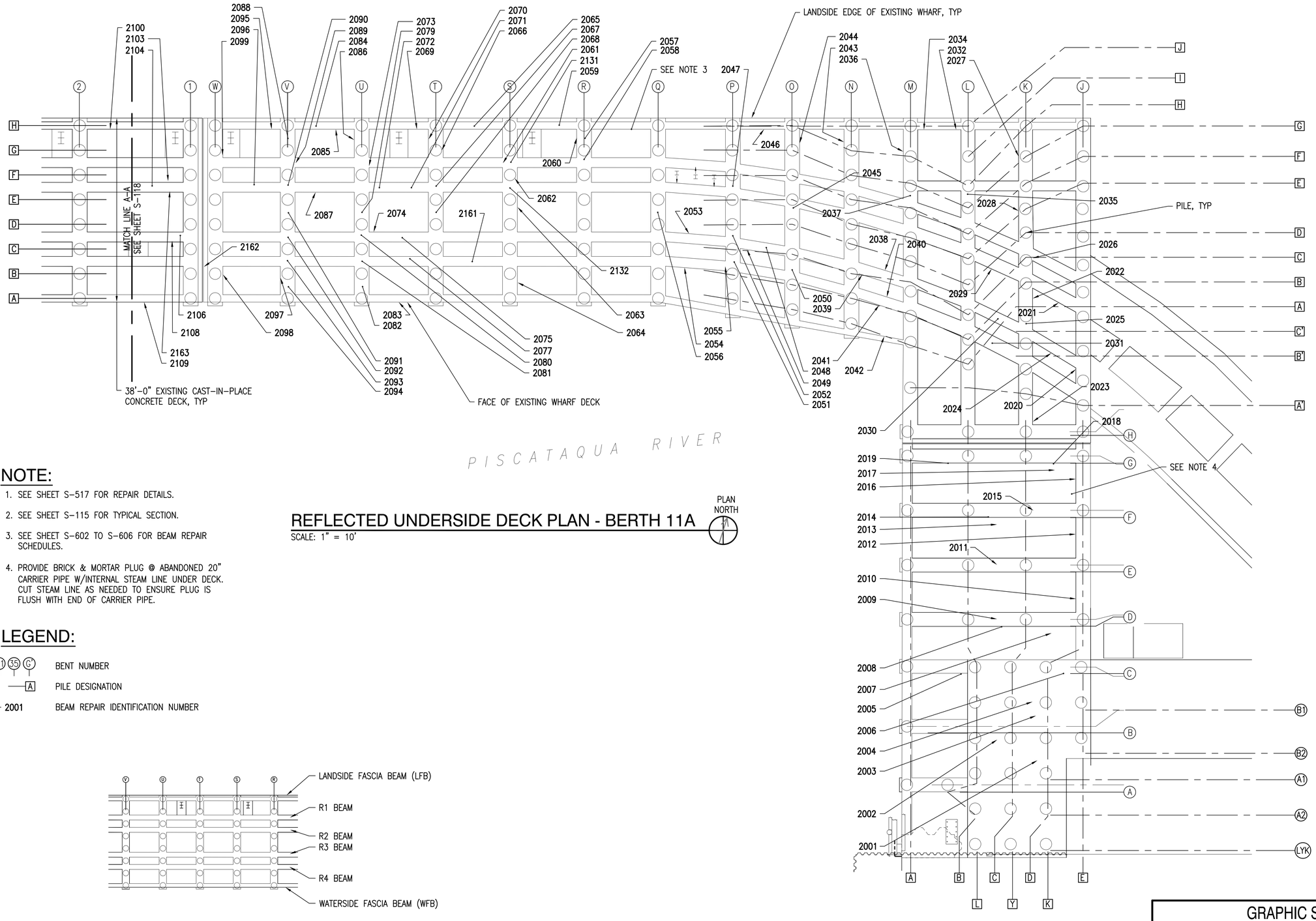

NOTE:

1. SEE SHEET S-517 FOR REPAIR DETAILS.
2. SEE SHEET S-115 FOR TYPICAL SECTION.
3. SEE SHEET S-602 TO S-606 FOR BEAM REPAIR SCHEDULES.
4. PROVIDE BRICK & MORTAR PLUG @ ABANDONED 20" CARRIER PIPE W/INTERNAL STEAM LINE UNDER DECK. CUT STEAM LINE AS NEEDED TO ENSURE PLUG IS FLUSH WITH END OF CARRIER PIPE.

REFLECTED UNDERSIDE DECK PLAN - BERTH 11A

SCALE: 1" = 10'

PLAN NORTH

LEGEND:

LYK A1 35 G' — BENT NUMBER

A — PILE DESIGNATION

2001 — BEAM REPAIR IDENTIFICATION NUMBER

PLAN - TYPICAL BEAM IDENTIFICATION

SCALE: 1" = 20'

GRAPHIC SCALE

1"=10' 10' 0 10' 20'

CHECK GRAPHIC SCALE BEFORE USING

SYM	DESCRIPTION	DATE	APPR

NAVFAC

SEAL

MN FST A JOINT VENTURE

A/E INFO

APPROVED David W. Greenfield

FOR COMMANDER NAVFAC

ACTIVITY: PER DOCUMENT FROM PNSY CODE 980, KITTERY ME

SATISFACTORY TO DATE: 05/09/16

DES MN | DRW AMS | CHK MN

PM/DM: NATHAN LIBBY

BRANCH MANAGER: NATHAN MAHER

FEAD/PM&E: AMIN BAHROUR

FIRE PROTECTION: N/A

DEPARTMENT OF THE NAVY
NAVAL FACILITIES ENGINEERING COMMAND
PUBLIC WORKS DEPARTMENT - MAINE

NAVAL FACILITIES ENGINEERING COMMAND ~ MID-ATLANTIC
NAVAL SHIPYARD - PORTSMOUTH, NH

PORTSMOUTH NAVAL SHIPYARD

KITTERY, MAINE

STRUCTURAL REPAIRS AT BERTHS 11A, 11B AND 11C

EXISTING BEAM REPAIR PLAN - SHEET 1 OF 4

EPROJECT NO.: 1356489

CONSTR. CONTR. NO. N40085-XX-C-XXXX

NAVFAC DRAWING NO. 12716078

SHEET 82 OF 144

S-117 | FP2-16-718

DRAWFORM REVISION: 10 OCTOBER 2014

FILE NAME: S:\1794\Active\179410203\(\TP-104A PNSY Lifting Study\TP-104A PNSY Lifting Study\02 CADD\08 Structural\FP2-16-721.dwg LAYOUT NAME: EXISTING BEAM REPAIR PLAN - SHEET 1 OF 4 PLOTTED: Friday, May 13, 2016 - 2:48pm USER: cgoodridge

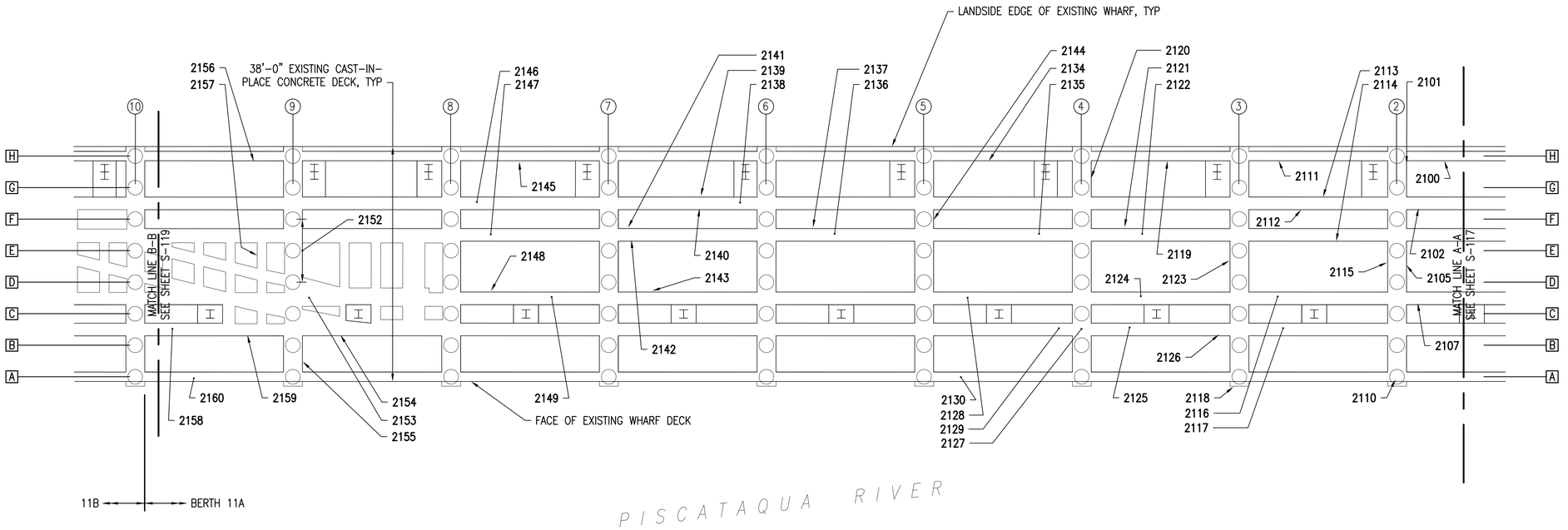

REFLECTED UNDERSIDE DECK PLAN - BERTH 11A

SCALE: 1" = 10'

PLAN NORTH

NOTE:

1. SEE SHEET S-517 FOR REPAIR DETAILS.
2. SEE SHEET S-115 FOR TYPICAL BEAM IDENTIFICATION.

LEGEND:

LYK A1 35 G'	BENT NUMBER
A	PILE DESIGNATION
2001	BEAM REPAIR IDENTIFICATION NUMBER

GRAPHIC SCALE

1"=10' 10' 0 10' 20'

CHECK GRAPHIC SCALE BEFORE USING

SYM	DESCRIPTION	DATE	APPR

NAVFAC

MN FST A JOINT VENTURE

A/E INFO

APPROVED David W. Greenfield FOR COMMANDER NAVFAC

ACTIVITY: PER DOCUMENT FROM PNSY CODE 980, KITTERY ME

SATISFACTORY TO DATE: 05/09/16

DES MN DRW FC CHK MN

PM/DM: NATHAN LIBBY

BRANCH MANAGER: NATHAN MAHER

FEAD/PM&E: AMIN BAHROUR

FIRE PROTECTION: N/A

DEPARTMENT OF THE NAVY
NAVAL FACILITIES ENGINEERING COMMAND
PUBLIC WORKS DEPARTMENT - MAINE

NAVAL FACILITIES ENGINEERING COMMAND ~ MID-ATLANTIC
NAVAL SHIPYARD - PORTSMOUTH, NH

PORTSMOUTH NAVAL SHIPYARD KITTERY, MAINE

STRUCTURAL REPAIRS AT BERTHS 11A, 11B AND 11C

EXISTING BEAM REPAIR PLAN - SHEET 2 OF 4

EPROJECT NO.: 1356489

CONSTR. CONTR. NO. N40085-XX-C-XXXX

NAVFAC DRAWING NO. 12716079

SHEET 83 OF 144

S-118 FP2-16-719

DRAWFORM REVISION: 10 OCTOBER 2014

FILE NAME: S:\1794\Active\179410203\T\TP-104A PNSY Lifting Study\TP-104A PNSY Lifting Study\02 CADD\08 Structural\FP2-16-721.dwg LAYOUT NAME: EXISTING BEAM REPAIR PLAN - SHEET 2 OF 4 PLOTTED: Friday, May 13, 2016 - 2:48pm USER: cgoodridge

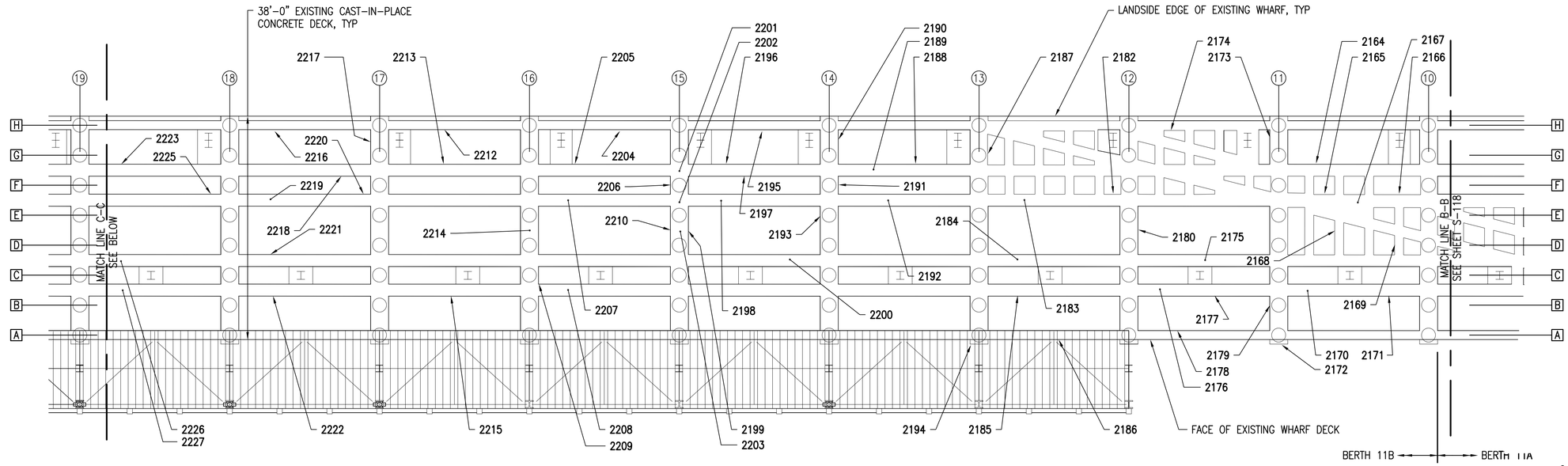

REFLECTED UNDERSIDE DECK PLAN - BERTH 11B

SCALE: 1" = 10'

PLAN NORTH

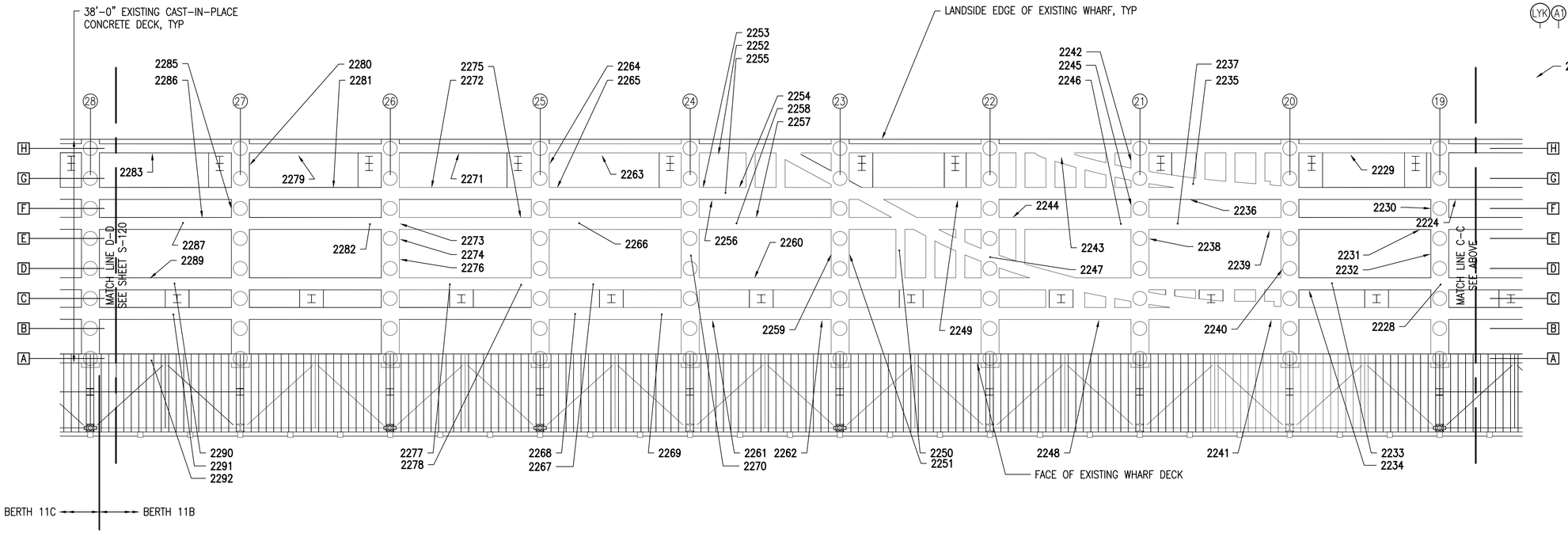

REFLECTED UNDERSIDE DECK PLAN - BERTH 11B

SCALE: 1" = 10'

PLAN NORTH

NOTE:

1. SEE SHEET S-517 FOR REPAIR DETAILS.
2. SEE SHEET S-115 FOR TYPICAL BEAM IDENTIFICATION.

LEGEND:

(LYK)(A1)(35)(G) — BENT NUMBER

A — PILE DESIGNATION

2001 — BEAM REPAIR IDENTIFICATION NUMBER

GRAPHIC SCALE

1"=10'

10' 0 10' 20'

CHECK GRAPHIC SCALE BEFORE USING

APPR | DATE | DESCRIPTION | SYM

NAVFAC

COMMONWEALTH OF MASSACHUSETTS — MARK NICOLAZZO — No. 51,524 — REGISTERED PROFESSIONAL ENGINEER — SEAL

MN FST A JOINT VENTURE — A/E INFO

APPROVED — David W. Grunfeld — FOR COMMANDER NAVFAC

ACTIVITY: PER DOCUMENT FROM PNSY CODE 980, KITTERY ME

SATISFACTORY TO — DATE: 05/09/16

DES: MN | DRW: AMS | CHK: MN

PM/DM: NATHAN LIBBY

BRANCH MANAGER: NATHAN MAHER

FEAD/PM&E: AMIN BAHROUR

FIRE PROTECTION: N/A

DEPARTMENT OF THE NAVY
NAVAL FACILITIES ENGINEERING COMMAND
PUBLIC WORKS DEPARTMENT - MAINE
PORTSMOUTH NAVAL SHIPYARD

NAVAL FACILITIES ENGINEERING COMMAND ~ MID-ATLANTIC
NAVAL SHIPYARD - PORTSMOUTH, NH

STRUCTURAL REPAIRS AT BERTHS 11A, 11B AND 11C

KITTERY, MAINE

EXISTING BEAM REPAIR PLAN – SHEET 3 OF 4

EPROJECT NO.: 1356489

CONSTR. CONTR. NO. N40085-XX-C-XXXX

NAVFAC DRAWING NO. 12716080

SHEET 84 OF 144

S-119 | FP2-16-720

DRAWFORM REVISION: 10 OCTOBER 2014

FILE NAME: S:\1794\Active\179410203\r\TP-104A PNSY Lifting Study\TP-104A PNSY Lifting Study\02 CADD\08 Structural\FP2-16-721.dwg LAYOUT NAME: EXISTING BEAM REPAIR PLAN – SHEET 3 OF 4 PLOTTED: Friday, May 13, 2016 – 2:48pm USER: cgoodridge

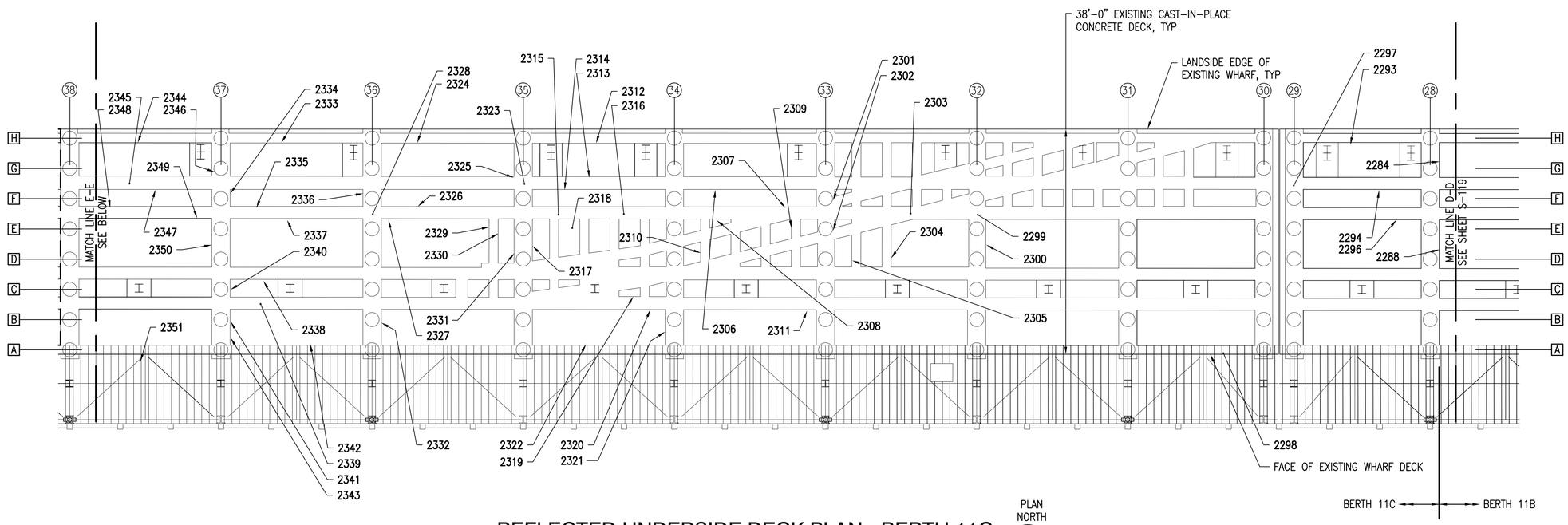

REFLECTED UNDERSIDE DECK PLAN - BERTH 11C

SCALE: 1" = 10'

PLAN NORTH

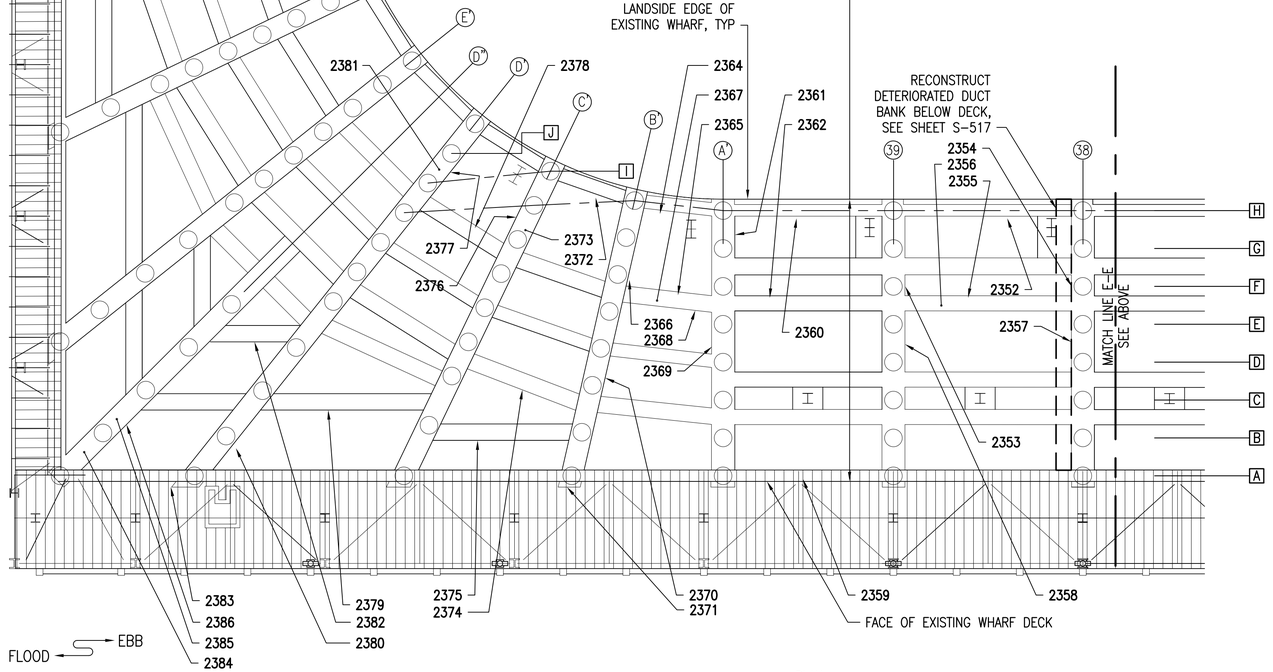

REFLECTED UNDERSIDE DECK PLAN - BERTH 11C

SCALE: 1" = 10'

PLAN NORTH

NOTES:

1. SEE SHEET S-517 FOR REPAIR DETAILS.
2. SEE SHEET S-115 FOR TYPICAL BEAM IDENTIFICATION.

LEGEND:

LYK A1 35 G' — BENT NUMBER

A — PILE DESIGNATION

2001 — BEAM REPAIR IDENTIFICATION NUMBER

GRAPHIC SCALE

1"=10'

10' 0 10' 20'

CHECK GRAPHIC SCALE BEFORE USING

APPR | DATE | DESCRIPTION | MK

NAVFAC

COMMONWEALTH OF MASSACHUSETTS — MARK NICOLAZZO — No. 51724 — REGISTERED PROFESSIONAL ENGINEER

SEAL

MN FST A JOINT VENTURE

A/E INFO

APPROVED: David W. Dunfield — FOR COMMANDER NAVFAC

ACTIVITY: PER DOCUMENT FROM PNSY CODE 980, KITTERY ME

SATISFACTORY TO — DATE: 05/09/16

DES	MN	DRW	FC	CHK	MN

PM/DM: NATHAN LIBBY

BRANCH MANAGER: NATHAN MAHER

FEAD/PM&E: AMN BAHROUR

FIRE PROTECTION: N/A

DEPARTMENT OF THE NAVY
NAVAL FACILITIES ENGINEERING COMMAND
PUBLIC WORKS DEPARTMENT - MAINE
PORTSMOUTH NAVAL SHIPYARD

NAVAL FACILITIES ENGINEERING COMMAND – MID-ATLANTIC
NAVAL SHIPYARD - PORTSMOUTH, NH

KITTERY, MAINE

STRUCTURAL REPAIRS AT BERTHS 11A, 11B AND 11C

EXISTING BEAM REPAIR PLAN – SHEET 4 OF 4

EPROJECT NO.: 1356489

CONSTR. CONTR. NO.: N40085-XX-C-XXXX

NAVFAC DRAWING NO.: 12716081

SHEET 85 OF 144

S-120 | FP2-16-721

DRAWFORM REVISION: 10 OCTOBER 2014

FILE NAME: S:\1794\Active\179410203\VTP-104A PNSY Lifting Study\TP-104A PNSY Lifting Study\02 CAD\08 Structure\FP2-16-721.dwg LAYOUT NAME: EXISTING BEAM REPAIR PLAN – SHEET 4 OF 4 PLOTTED: Friday, May 13, 2016 – 2:48pm USER: cgocdridge

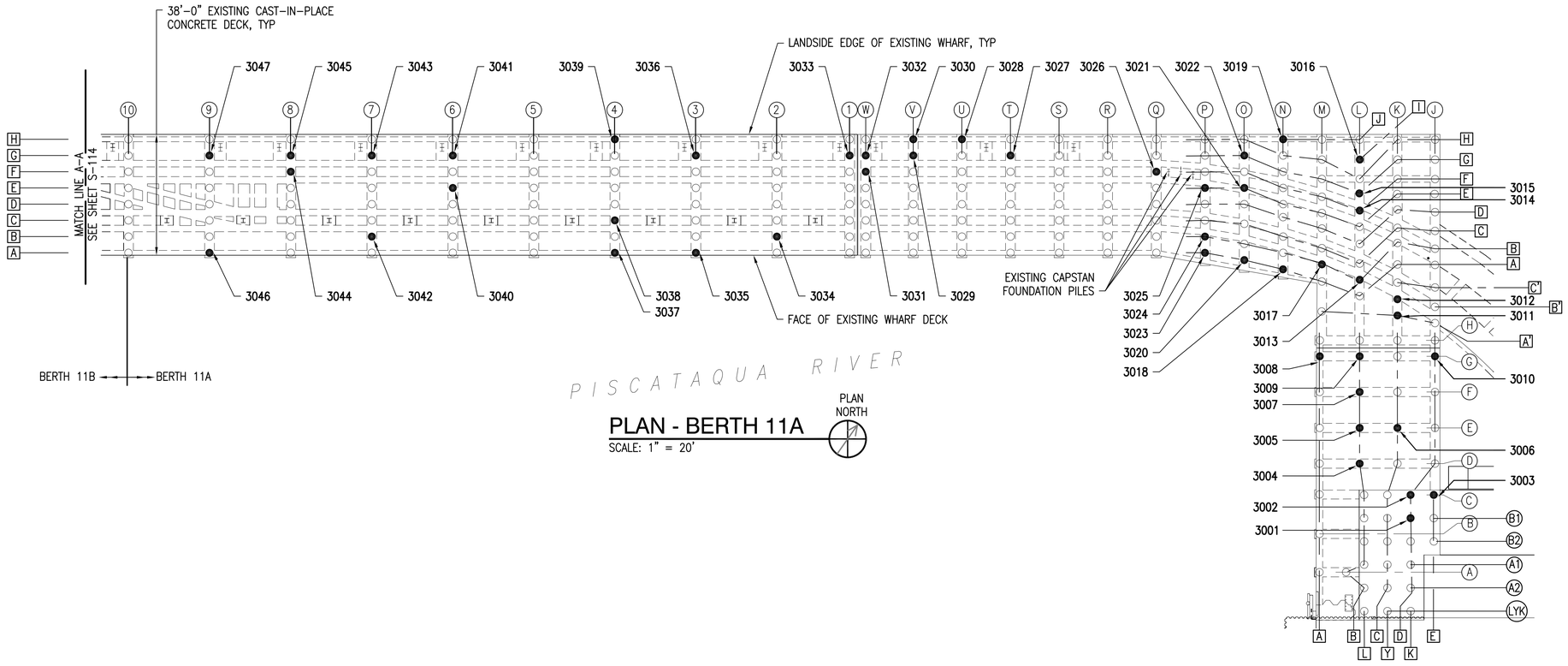

PLAN - BERTH 11A

SCALE: 1" = 20'

NOTE:

1. SEE SHEET S-518 FOR REPAIR DETAILS.
2. SEE SHEET S-607 FOR PILE JACKET REPAIR SCHEDULES.
3. SEE SHEET S-115 FOR TYPICAL SECTION OF WHARF.

LEGEND:

- BENT NUMBER
- PILE ROW DESIGNATION
- H-PILE WITH CONCRETE JACKET
- H-PILE
- 3001 — PILE JACKET REPAIR IDENTIFICATION NUMBER

GRAPHIC SCALE

1"=20' — 20' 0 20' 40'

CHECK GRAPHIC SCALE BEFORE USING

APPR	DATE	DESCRIPTION	MK

NAVFAC

SEAL

MN FST A JOINT VENTURE

A/E INFO

APPROVED: David W. Grunfeld

FOR COMMANDER NAVFAC

ACTIVITY: PER DOCUMENT FROM PNSY CODE 980, KITTERY ME

SATISFACTORY TO DATE: 05/09/16

DES: MN | DRW: AMS | CHK: MN

PM/DM: NATHAN LIBBY

BRANCH MANAGER: NATHAN MAHER

FEAD/PM&E: AMIN BAHROUR

FIRE PROTECTION: N/A

DEPARTMENT OF THE NAVY
NAVAL FACILITIES ENGINEERING COMMAND
PUBLIC WORKS DEPARTMENT - MAINE
PORTSMOUTH NAVAL SHIPYARD

NAVAL FACILITIES ENGINEERING COMMAND ~ MID-ATLANTIC
NAVAL SHIPYARD - PORTSMOUTH, NH
KITTERY, MAINE

STRUCTURAL REPAIRS AT BERTHS 11A, 11B AND 11C

EXISTING PILE JACKET REPAIR PLAN - SHEET 1 OF 2

EPROJECT NO.: 1356489

CONSTR. CONTR. NO. N40085-XX-C-XXXX

NAVFAC DRAWING NO. 12716082

SHEET 86 OF 144

S-121 | FP2-16-722

DRAWFORM REVISION: 10 OCTOBER 2014

FILE NAME: S:\1794\Active\179410203\YP-104A PNSY Lifting Study\YP-104A PNSY Lifting Study\02 CADD\08 Structural\FP2-16-722.dwg LAYOUT NAME: EXISTING PILE JACKET REPAIR PLAN - SHEET 1 OF 2 PLOTTED: Friday, May 13, 2016 - 2:48pm USER: cgoodridge

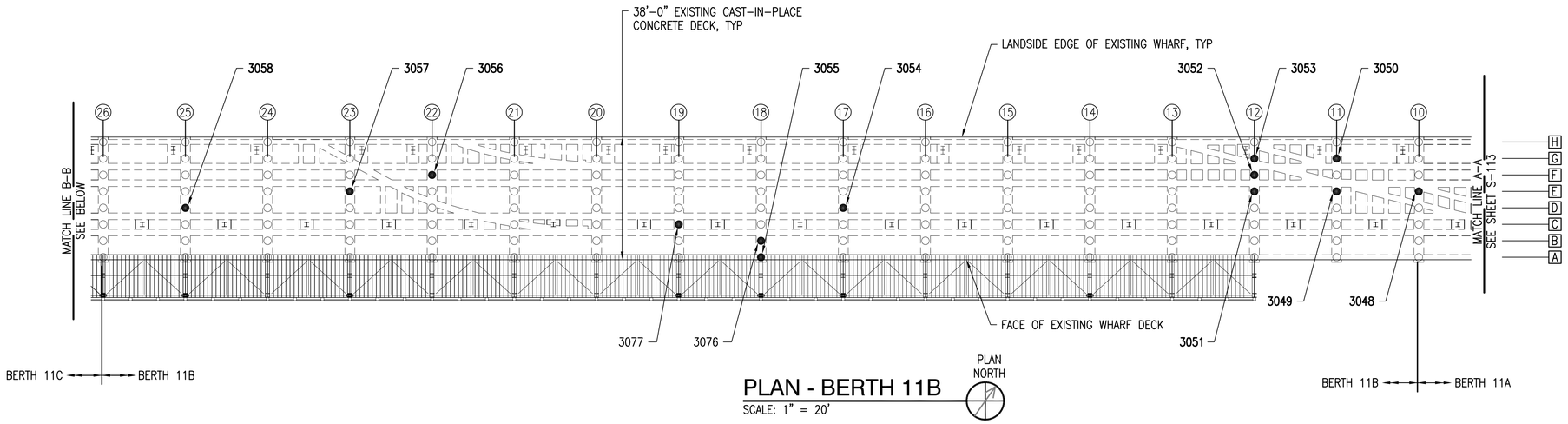

PLAN - BERTH 11B

SCALE: 1" = 20'

PLAN NORTH

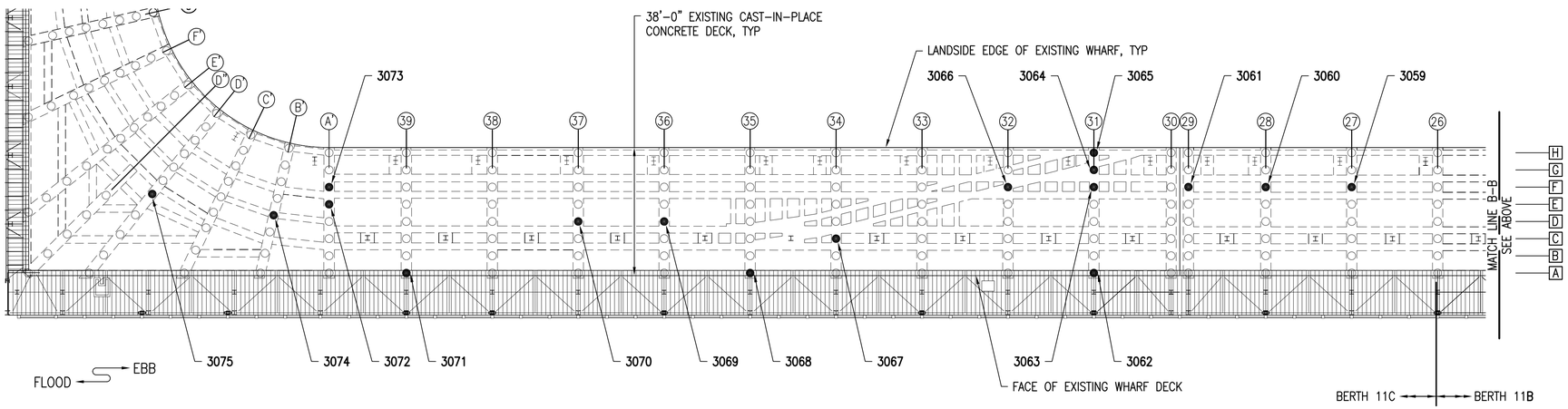

PLAN - BERTH 11C

SCALE: 1" = 20'

PLAN NORTH

NOTE:

1. SEE SHEET S-518 FOR REPAIR DETAILS.
2. SEE SHEET S-607 FOR PILE JACKET REPAIR SCHEDULES.
3. SEE SHEET S-115 FOR TYPICAL SECTION OF WHARF.

LEGEND:

- LYK A1 35 G' — BENT NUMBER
- A — PILE ROW DESIGNATION
- ○ — H-PILE WITH CONCRETE JACKET
- H-PILE
- 3001 — PILE JACKET REPAIR IDENTIFICATION NUMBER

GRAPHIC SCALE

1"=20' — 20' 0 20' 40'

CHECK GRAPHIC SCALE BEFORE USING

APPR	DATE	DESCRIPTION	MJS

NAVFAC

COMMONWEALTH OF MASSACHUSETTS — MARK NICOLAZZO — No. 51724 — REGISTERED PROFESSIONAL ENGINEER — CIVIL

SEAL

MNFST A JOINT VENTURE

A/E INFO

APPROVED
David W. Trumfield
FOR COMMANDER NAVFAC

ACTIVITY:
PER DOCUMENT FROM PNSY CODE 980, KITTERY ME

SATISFACTORY TO DATE: 05/09/16

DES	MN	DRW	AMS	CHK	MN

PM/DM: NATHAN LIBBY
BRANCH MANAGER: NATHAN MAHER
FEAD/PM&E: AMIN BAHROUR
FIRE PROTECTION: N/A

DEPARTMENT OF THE NAVY
NAVAL FACILITIES ENGINEERING COMMAND
PUBLIC WORKS DEPARTMENT - MAINE
PORTSMOUTH NAVAL SHIPYARD

NAVAL FACILITIES ENGINEERING COMMAND – MID-ATLANTIC
NAVAL SHIPYARD - PORTSMOUTH, NH
KITTERY, MAINE

STRUCTURAL REPAIRS AT BERTHS 11A, 11B AND 11C

EXISTING PILE JACKET REPAIR PLAN – SHEET 2 OF 2

EPROJECT NO.: 1356489

CONSTR. CONTR. NO.
N40085-XX-C-XXXX

NAVFAC DRAWING NO.
12716083

SHEET 87 OF 144

S-122 | FP2-16-723

DRAWFORM REVISION: 10 OCTOBER 2014

FILE NAME: S:\1794\Active\179410203\1\TP-1044 PNSY Lifting Study\TP-1044 PNSY Lifting Study\02 CAD\08 Structural\FP2-16-723.dwg LAYOUT NAME: EXISTING PILE JACKET REPAIR PLAN - SHEET 2 OF 2 PLOTTED: Friday, May 13, 2016 - 2:48pm USER: cgoodridge

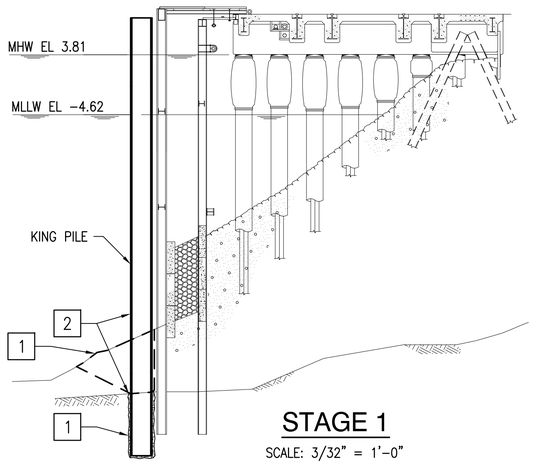

STAGE 1

SCALE: 3/32" = 1'-0"

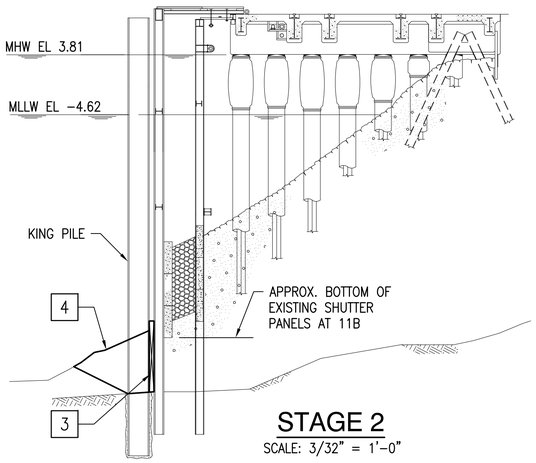

STAGE 2

SCALE: 3/32" = 1'-0"

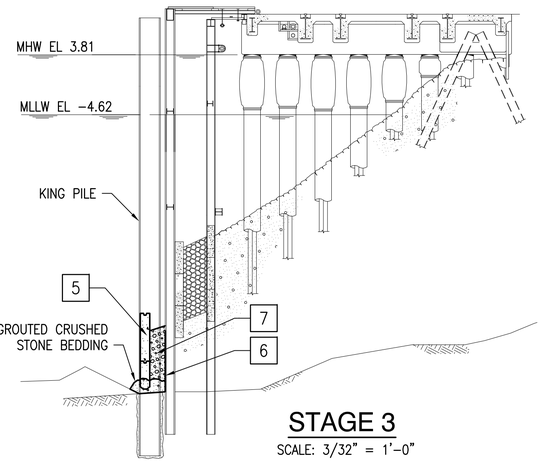

STAGE 3

SCALE: 3/32" = 1'-0"

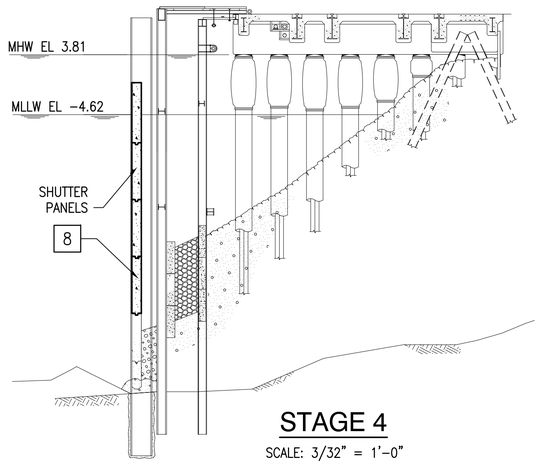

STAGE 4

SCALE: 3/32" = 1'-0"

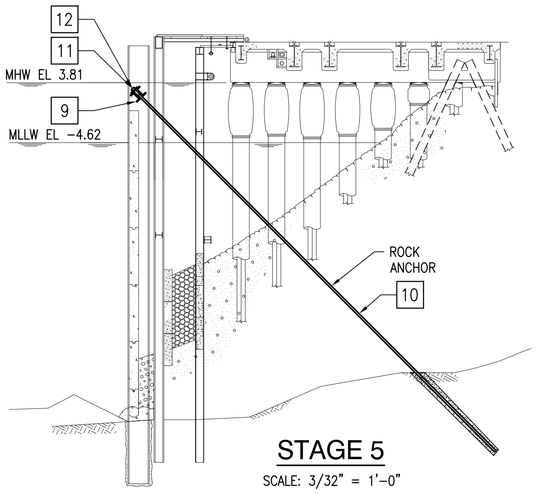

STAGE 5

SCALE: 3/32" = 1'-0"

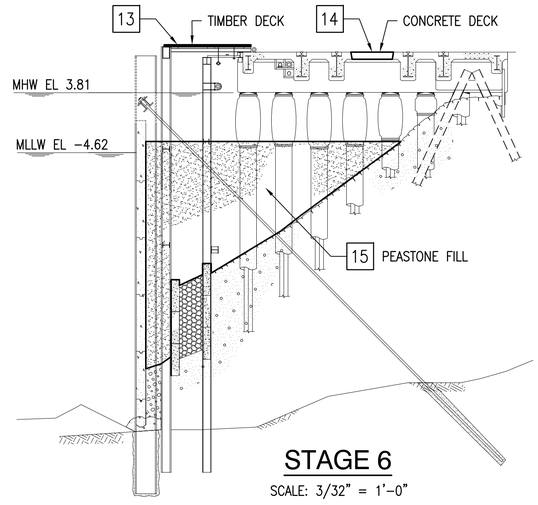

STAGE 6

SCALE: 3/32" = 1'-0"

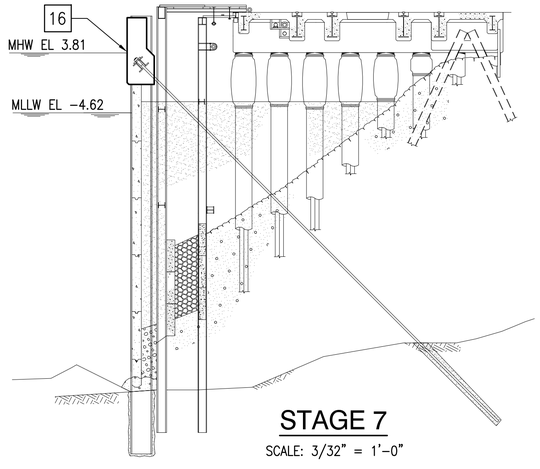

STAGE 7

SCALE: 3/32" = 1'-0"

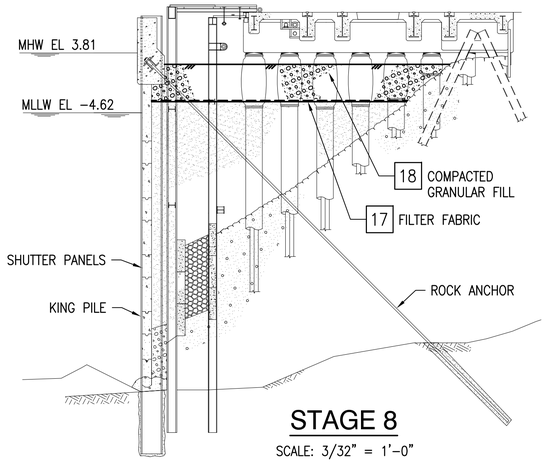

STAGE 8

SCALE: 3/32" = 1'-0"

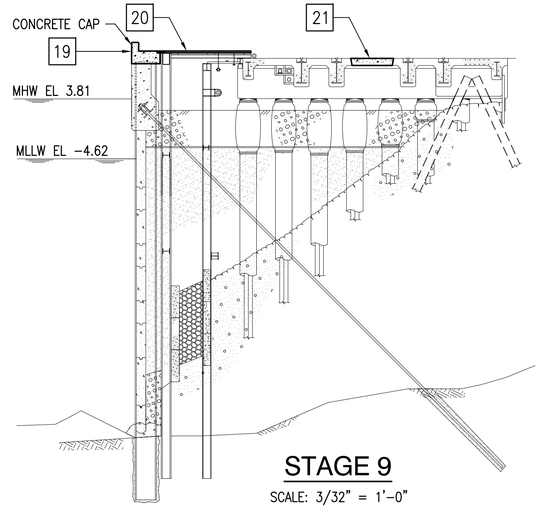

STAGE 9

SCALE: 3/32" = 1'-0"

STAGE NOTES

STAGE 1

1. INSTALL CASING, DRILL THRU OVERBURDEN AND INSTALL ROCK SOCKETS. (NOTE: DREDGING MAY PRECEDE THIS STEP IF THE TEMPORARY SUPPORT OF EXCAVATION IS INSTALLED TO MAINTAIN EXISTING FILL AND EXISTING SHUTTER PANELS)
2. INSTALL KING PILES AND GROUT SOCKETS. SEE KING PILE POSITIONING DETAIL B2, SHEET S-101.

STAGE 2

3. INSTALL TEMPORARY SUPPORT OF EXCAVATION AS REQUIRED.
4. DREDGE

STAGE 3

5. INSTALL AND SEAT BOTTOM SHUTTER PANELS AS REQUIRED TO REMOVE TEMPORARY SUPPORT OF EXCAVATION.
6. REMOVE TEMPORARY SUPPORT OF EXCAVATION.
7. BACKFILL BEHIND BOTTOM PANELS (UP TO BOTTOM OF EXISTING SHUTTER PANELS AT 11B).

STAGE 4

8. INSTALL REMAINING SHUTTER PANELS.

STAGE 5

9. CONSTRUCT WALE.
10. INSTALL ROCK ANCHORS AND POWER-SEAT ANCHORS. INSTALL WEDGE RETAINER PLATES
11. INSTALL TEMPORARY BRACING AT KING PILE, PERFORMANCE AND PROOF TEST ANCHORS, REMOVE TEMPORARY BRACING.
12. POWER SEAT ANCHORS, INSTALL WEDGE RETAINER PLATES AND COMPLETE WALE AND ANCHOR ASSEMBLY.

STAGE 6

13. REMOVE SECTIONS OF TIMBER DECK PANELS FOR FILL PLACEMENT.
14. REMOVE SECTIONS OF CONCRETE DECK FOR FILL PLACEMENT.
15. INSTALL PEASTONE FILL.

STAGE 7

16. CONSTRUCT CIP CONCRETE UPPER SECTION OF BULKHEAD.

STAGE 8

17. INSTALL FILTER FABRIC.
18. INSTALL COMPACTED GRANULAR FILL.

STAGE 9

19. CONSTRUCT CIP CONCRETE BULKHEAD CAP AND DECK FEATURES.
20. REINSTALL TIMBER DECK PANELS.
21. RECONSTRUCT CONCRETE DECK SECTIONS.

GRAPHIC SCALE

3/32"=1'-0"

4' 0 4' 8' 12' 16' 32'

CHECK GRAPHIC SCALE BEFORE USING

APPR	DATE	DESCRIPTION	MJS

NAVFAC

DONALD W. HARVIE CIVIL No. 13022 REGISTERED PROFESSIONAL ENGINEER
3/7/16
SEAL

MN FST A JOINT VENTURE
A/E INFO

APPROVED
FOR COMMANDER NAVFAC

ACTIVITY:
PER DOCUMENT FROM PNSY CODE 980, KITTERY ME

SATISFACTORY TO DATE: 05/09/16

DES: DWH	DRW: RWT	CHK: DWH

PM/DM: NATHAN LIBBY
BRANCH MANAGER: NATHAN MAHER
FEAD/PM&E: AMN BAHROUR
FIRE PROTECTION: N/A

DEPARTMENT OF THE NAVY
NAVAL FACILITIES ENGINEERING COMMAND
PUBLIC WORKS DEPARTMENT - MAINE
PORTSMOUTH NAVAL SHIPYARD

NAVAL FACILITIES ENGINEERING COMMAND ~ MID-ATLANTIC
NAVAL SHIPYARD - PORTSMOUTH, NH
KITTERY, MAINE

STRUCTURAL REPAIRS AT BERTHS 11A, 11B AND 11C

SCHEMATIC - BULKHEAD CONSTRUCTION STAGES

EPROJECT NO.: 1356489

CONSTR. CONTR. NO.
N40085-XX-C-XXXX

NAVFAC DRAWING NO.
12716084

SHEET 88 OF 144

S-301 | FP2-16-724

DRAWFORM REVISION: 10 OCTOBER 2014

FILE NAME: S:\1794\Active\179410203\YP-1044 PNSY Lifting Study\YP-1044 PNSY Lifting Study\02 CADD\08 Structural\FP2-16-724.dwg LAYOUT NAME: SCHEMATIC - BULKHEAD CONSTRUCTION STAGES PLOTTED: Friday, May 13, 2016 - 2:49pm USER: cpoodridge

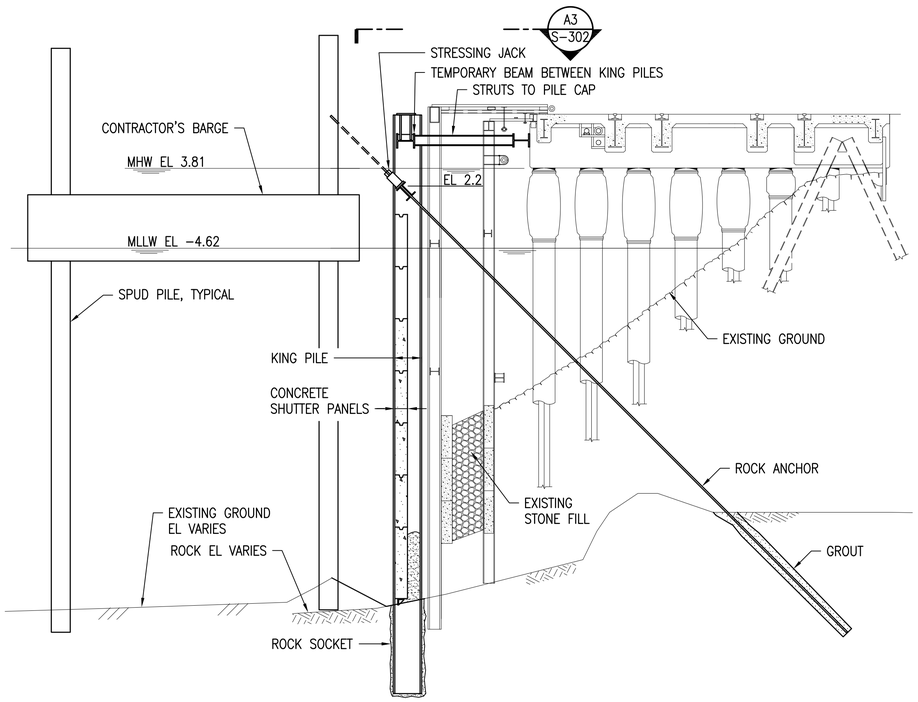

SCHEMATIC - BERTH 11B & 11C
PROOF TEST ANCHOR SUPPORT SYSTEM

SCALE: 1/8" = 1'-0"

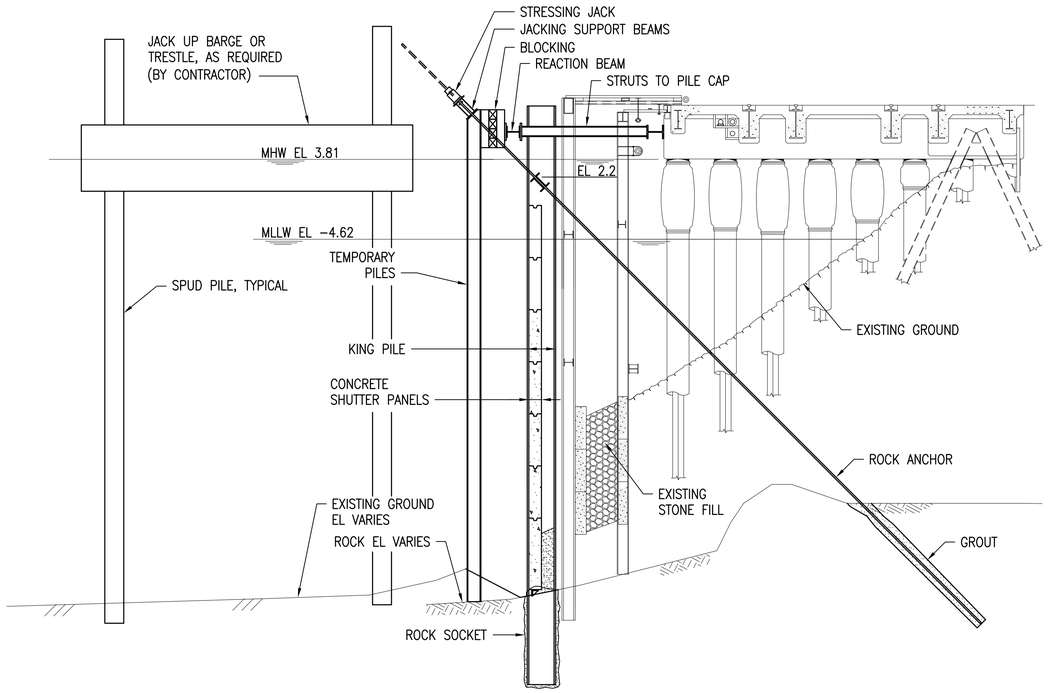

SCHEMATIC - BERTH 11B
PERFORMANCE TEST ANCHOR SUPPORT SYSTEM

SCALE: 1/8" = 1'-0"

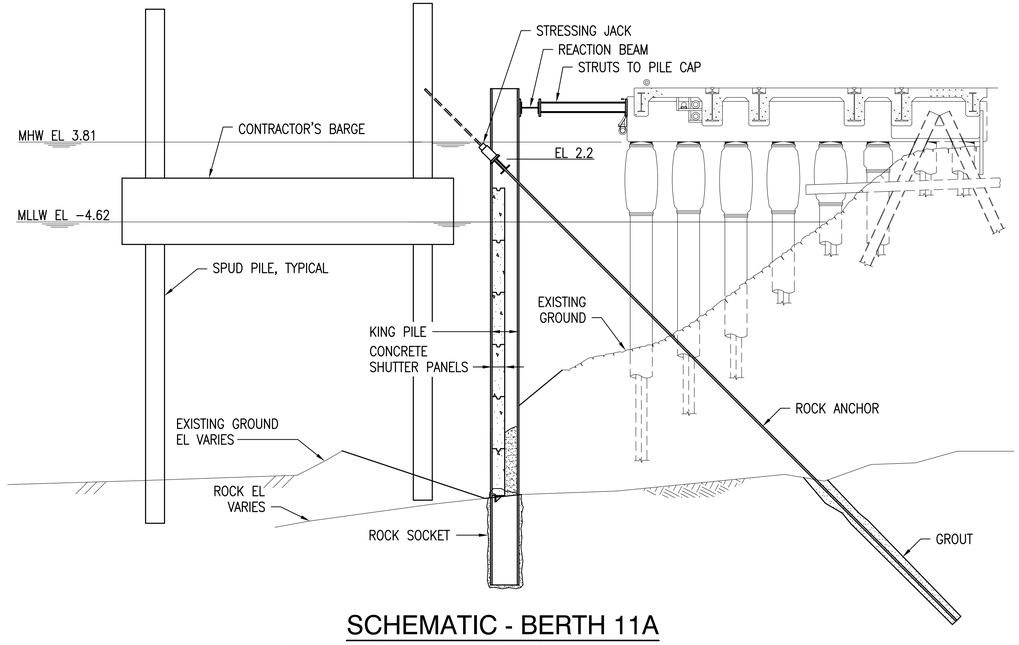

SCHEMATIC - BERTH 11A
PROOF TEST ANCHOR SUPPORT SYSTEM

SCALE: 1/8" = 1'-0"

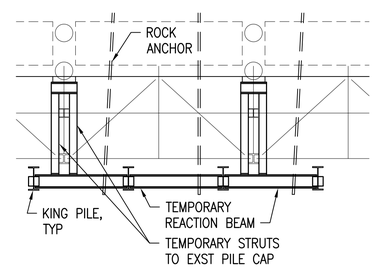

PLAN

SCALE: 1"=10' S-302 A3

NOTES:

1. TEST ANCHOR SUPPORT SYSTEM SHALL BE DESIGNED BY THE CONTRACTOR.
2. ANCHORS DESIGNATED TO BE PERFORMANCE TESTED SHALL BE INSTALLED AND TESTED PRIOR TO INSTALLING THE REMAINING ANCHORS.
3. ALL REMAINING ANCHORS SHALL BE PROOF TESTED.
4. PERFORMANCE AND PROOF TESTS SHALL BE CONDUCTED PRIOR TO BACKFILLING THE BULKHEAD AND REQUIRE TEMPORARY BRACING.
5. DURING ANCHOR TESTS, CONTRACTOR SHALL MONITOR BEHAVIOR OF EXISTING STRUCTURE, AND IMMEDIATELY NOTIFY CONTRACTING OFFICER AND CEASE TESTING IF DISTRESS IN EXISTING STRUCTURE IS OBSERVED.

GRAPHIC SCALE

1/8"=1'-0" 4' 0 4' 8' 12' 16'

CHECK GRAPHIC SCALE BEFORE USING

SYM	DESCRIPTION	DATE	APPR

NAVFAC

DONALD W. HARVIE CIVIL No. 31070 REGISTERED PROFESSIONAL ENGINEER
3/7/16
SEAL

MN FST A JOINT VENTURE
A/E INFO

APPROVED
David W. Greenfield
FOR COMMANDER NAVFAC

ACTIVITY:
PER DOCUMENT FROM PNSY CODE 980, KITTERY ME

SATISFACTORY TO DATE: 05/09/16

DES DJM | DRW RWT | CHK DJM

PM/DM: NATHAN LIBBY
BRANCH MANAGER: NATHAN MAHER
FEAD/PM&E: AMIN BAHROUR
FIRE PROTECTION: N/A

DEPARTMENT OF THE NAVY
NAVAL FACILITIES ENGINEERING COMMAND
PUBLIC WORKS DEPARTMENT - MAINE
NAVAL FACILITIES ENGINEERING COMMAND ~ MID-ATLANTIC
NAVAL SHIPYARD - PORTSMOUTH, NH
PORTSMOUTH NAVAL SHIPYARD
KITTERY, MAINE

STRUCTURAL REPAIRS AT BERTHS 11A, 11B AND 11C

SCHEMATIC - ROCK ANCHOR TEST SUPPORT SYSTEM

EPROJECT NO.: 1356489
CONSTR. CONTR. NO. N40085-XX-C-XXXX
NAVFAC DRAWING NO. 12716085
SHEET 89 OF 144
S-302 FP2-16-725
DRAWFORM REVISION: 10 OCTOBER 2014

FILE NAME: S:\1794\Active\179410203\(\TP-104A PNSY Lifting Study\TP-104A PNSY Lifting Study\02 CADD\08 Structural\FP2-16-725.dwg LAYOUT NAME: SCHEMATIC - ROCK ANCHOR TEST SUPPORT SYSTEM PLOTTED: Friday, May 13, 2016 - 2:49pm USER: cgoodridge

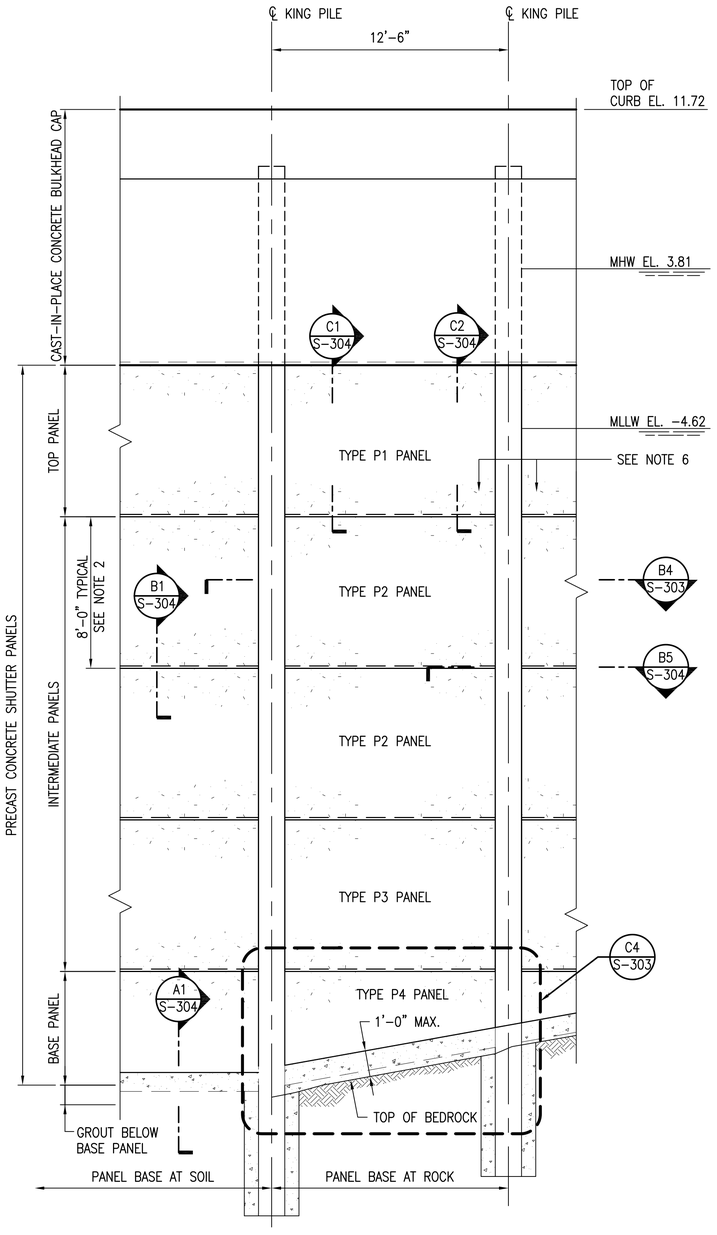

TYPICAL SHUTTER PANEL ELEVATION (A1)
SCALE: 1/4" = 1'–0" — S–103

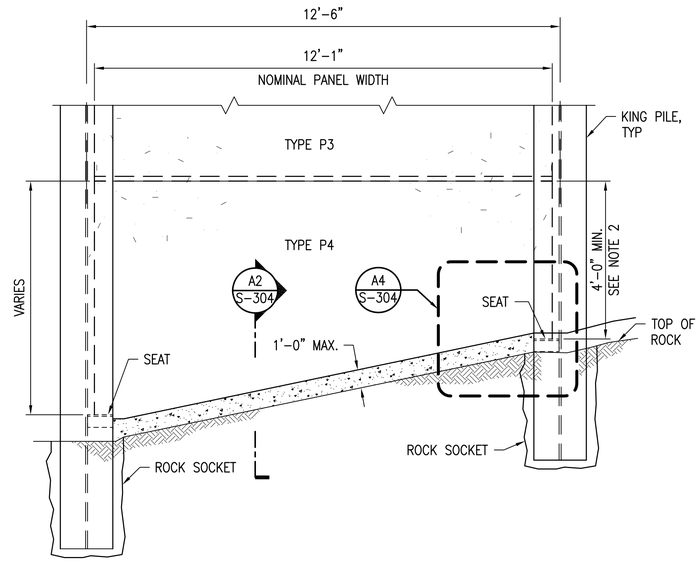

TYPICAL BASE PANEL ELEVATION (C4)
SCALE: 1/2" = 1'–0" — S–303

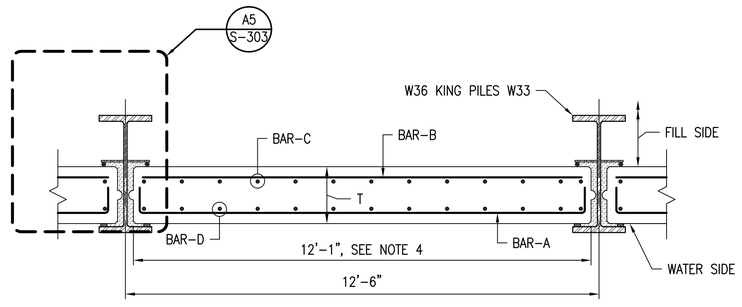

TYPICAL SHUTTER PANEL SECTION (B4)
SCALE: 1/2" = 1'–0" — S–303

SHUTTER PANEL REINFORCEMENT SCHEDULE

PANEL TYPE	ELEVATIONS (ft)	PANEL THICKNESS T	BAR–A	BAR–B	BAR–C	BAR–D
P1	0.00 TO –8.00	1'–3"	#6@6"	#5@12"	#5@12"	#4@12"
P2	–8.00 TO –24.00	1'–3"	#6@6"	#5@12"	#5@12"	#4@12"
P3	–24.00 TO TOP OF P4	1'–3"	#6@5"	#5@10"	#5@12"	#4@12"
P4	BASE PANEL	1'–3"	#6@4"	#5@12"	#5@12"	#4@12"

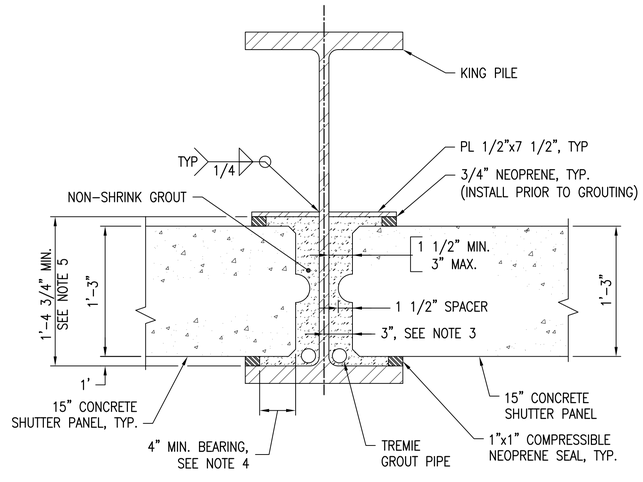

TREMIE GROUT DETAIL AT KING PILE (A5)
SCALE: 1 1/2" = 1'–0" — S–303

NOTES:

1. SEE SCHEDULE FOR PANEL REINFORCEMENT AND THICKNESS.
2. THE TYPICAL PANEL HEIGHT MAY BE ADJUSTED TO SUIT FIELD CONDITIONS AND FABRICATION/SHIPPING LIMITATIONS, HOWEVER, THE NUMBER OF JOINTS SHALL BE KEPT TO A MINIMUM. THE MINIMUM PANEL HEIGHT FOR TYPES P1, P2 AND P3 SHALL BE 6 FEET AND THE MINIMUM TYPE P4 PANEL HEIGHT SHALL BE 4 FEET AS SHOWN ON THE PLANS. P3 PANEL HEIGHT SHALL BE ADJUSTED IF REQUIRED TO MAINTAIN 4'–0" MIN. HEIGHT FOR P4 PANELS. MINIMUM PANEL HEIGHT FOR P3 PANELS IS ALSO 4'–0".
3. THE THEORETICAL GAP BETWEEN THE PILE WEB AND THE EDGE OF PANEL IS APPROXIMATELY 2 1/2" (ASSUMING A 1" PILE WEB THICKNESS). THE SPACERS ARE INTENDED TO MAINTAIN A MINIMUM 1 1/2" ANNULAR SPACE FOR GROUTING BETWEEN THE PANEL AND THE PILE WEB. A MINIMUM OF TWO SPACERS (ONE TOP AND ONE BOTTOM) SHALL BE PROVIDED AND SHALL BE DETAILED TO ALLOW GROUT TO FLOW FREELY.
4. IF KING PILE SPACING IS GREATER THAN 12'–7 3/4", DUE TO INSTALLATION VARIATIONS, SHUTTER PANEL LENGTHS SHALL BE INCREASED ACCORDINGLY TO RESULT IN A MINIMUM BEARING LENGTH OF 4 INCHES BETWEEN THE OUTSIDE FACE OF THE SHUTTER PANEL AND THE FLANGE OF THE KING PILE.
5. GUIDE PLATE SLOT WIDTH AND NEOPRENE SEAL THICKNESS'S MAY BE INCREASED TO SUIT CONTRACTOR INSTALLATION PROCEDURES AND TECHNIQUES.
6. PANEL JOINTS SHALL BE MAINTAINED AT THE SAME ELEVATION WHEREVER POSSIBLE.

1/2"=1'–0" 4' 3' 2' 1' 0 4'

GRAPHIC SCALE
1/4"=1'–0" 4' 0 4' 8'
CHECK GRAPHIC SCALE BEFORE USING

APPR | DATE | DESCRIPTION | SYM

NAVFAC

DAVID J. MELO CIVIL No. 48692 REGISTERED PROFESSIONAL ENGINEER COMMONWEALTH OF MASSACHUSETTS 3/7/16 SEAL

MNFST A JOINT VENTURE A/E INFO

APPROVED David W. Grunfeld FOR COMMANDER NAVFAC

ACTIVITY: PER DOCUMENT FROM PNSY CODE 980, KITTERY ME

SATISFACTORY TO DATE: 05/09/16

DES DJM | DRW RWT | CHK DWH

PM/DM: NATHAN LIBBY

BRANCH MANAGER: NATHAN MAHER

FEAD/PM&E: AMIN BAHROUR

FIRE PROTECTION: N/A

DEPARTMENT OF THE NAVY
NAVAL FACILITIES ENGINEERING COMMAND
PUBLIC WORKS DEPARTMENT – MAINE
PORTSMOUTH NAVAL SHIPYARD

NAVAL FACILITIES ENGINEERING COMMAND – MID-ATLANTIC
NAVAL SHIPYARD – PORTSMOUTH, NH

STRUCTURAL REPAIRS AT BERTHS 11A, 11B AND 11C
KITTERY, MAINE

BULKHEAD SHUTTER PANELS SECTIONS & DETAILS – SHEET 1 OF 2

EPROJECT NO.: 1356489

CONSTR. CONTR. NO. N40085–XX–C–XXXX

NAVFAC DRAWING NO. 12716086

SHEET 90 OF 144

S-303 | FP2-16-726

DRAWFORM REVISION: 10 OCTOBER 2014

FILE NAME: S:\1794\Active\1794102033\r\1P–104A PNSY Lifting Study\1P–104A PNSY Lifting Study\02 CADD\08 Structural\FP2–16–727.dwg LAYOUT NAME: BULKHEAD SHUTTER PANELS SECTIONS & DETAILS – SHEET 1 OF 2 PLOTTED: Friday, May 13, 2016 – 2:49pm USER: cgpodridge

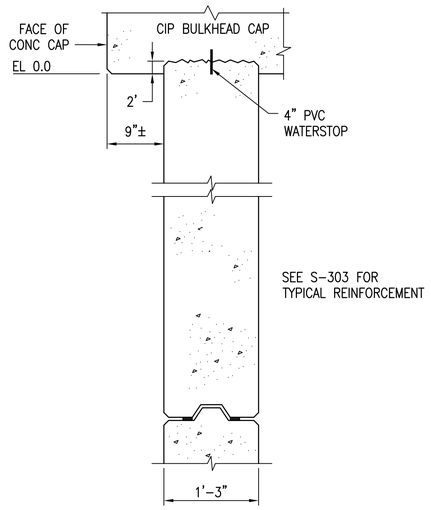

SECTION - TOP OF PANEL P1 (C1)
SCALE: 1" = 1'-0" S-303

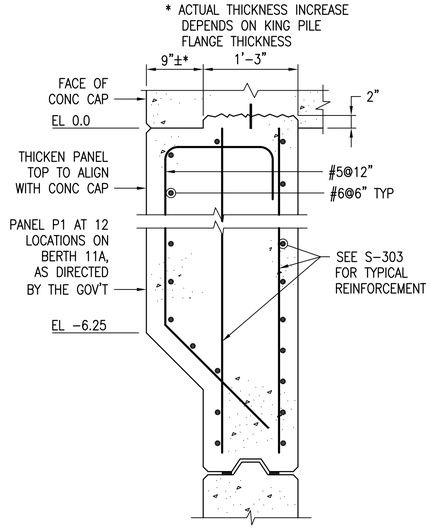

SECTION - TOP OF MODIFIED PANEL P1 (C2)
SCALE: 1" = 1'-0" S-303

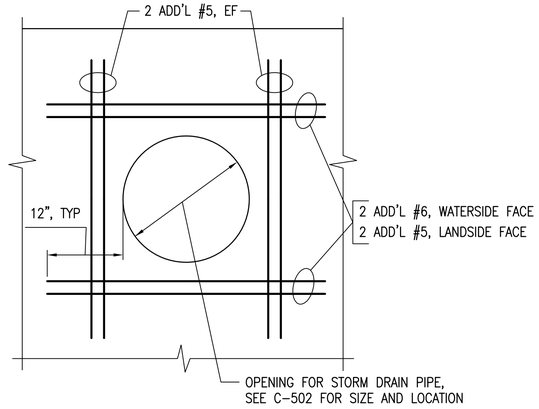

DETAIL - PANEL WITH STORM DRAIN OPENING (C4)
SCALE: 1" = 1'-0"

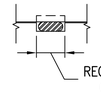

SECTION - RUBBER SEAL (D5)
NOT TO SCALE S-304

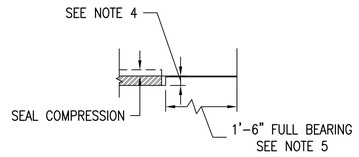

SECTION - RUBBER SEAL (C5)
NOT TO SCALE S-304

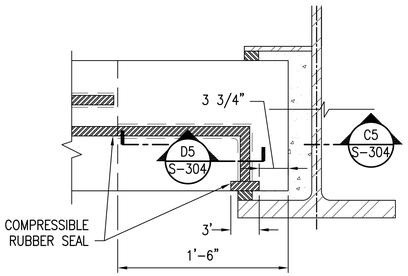

PLAN - BOTOM PANEL ENDS @ KING PILES (B5)
SCALE: 1-1/2" = 1'-0" S-303

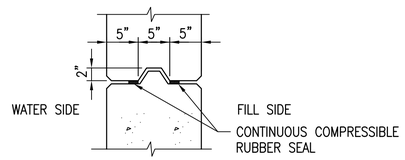

SECTION - INTERMEDIATE JOINT (B1)
SCALE: 1" = 1'-0" S-303

DETAIL (B2)
SCALE: 1-1/2" = 1'-0" S-304

WATERSTOP TERMINATION (B3)
SCALE: 1/2" = 1'-0" S-304

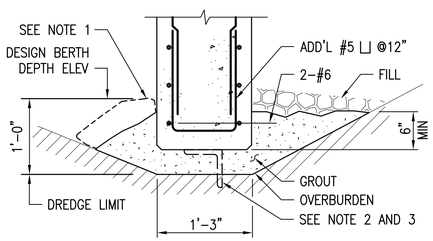

SECTION - BASE PANEL IN SOIL (A1)
SCALE: 1" = 1'-0" S-303

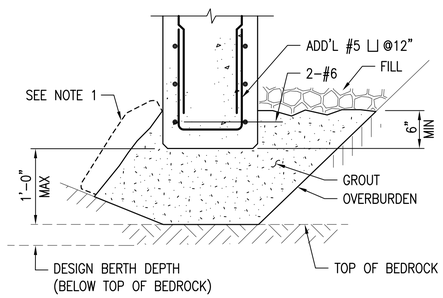

SECTION - BASE PANEL AT BEDROCK (A2)
SCALE: 1" = 1'-0" S-303

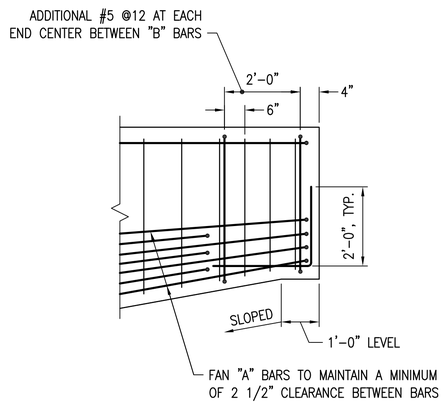

SECTION - PANEL P4 REINFORCEMENT (A4)
NOT TO SCALE S-303

NOTES:

1. THE CONTRACTOR SHALL PROVIDE A TEMPORARY CLOSURE ON WATER SIDE OF BASE PANEL PRIOR TO THE PLACING THE GROUT SEAL AT THE BASE OF WALL TO CONTAIN THE GROUT AND PREVENT PLUMES.
2. THE CONTRACTOR MAY PROVIDE AN ANGLE AT THE BASE OF THE PANEL TO CONTAIN THE GROUT. DETAILS SHALL BE SUBMITTED FOR REVIEW AND APPROVAL.
3. MODIFICATIONS TO THE SHAPE OF THE PANEL BASE TO ASSIST IN SEATING THE PANEL IN OVERBURDEN IF THE PANEL IS UTILIZED AS PART OF THE TEMPORARY SUPPORT OF EXCAVATION SYSTEM, SHALL BE SUBMITTED FOR REVIEW AND APPROVAL. MODIFICATIONS THAT REDUCE THE PANEL CAPACITY OR COULD RESULT IN DAMAGE TO THE SHUTTER PANEL ARE NOT PERMITTED.
4. PROVIDE RECESS FOR COMPRESSIBLE RUBBER SEAL WITHIN FULL BEARING AREA TO ACCOMMODATE SEAL MOVEMENT OF 30% WHEN UPPER PANEL IS SET.
5. DETAIL PRECAST PANELS TO ENSURE FULL BEARING AT PANEL END AND UNIFORM COMPRESSION AT THE RUBBER SEALS.

GRAPHIC SCALE

1 1/2"=1'-0" 1' 6" 0 1' 2' (9" 3")

1"=1'-0" 1' 6" 0 1' 3' (9" 3")

CHECK GRAPHIC SCALE BEFORE USING

APPR	DATE	DESCRIPTION	MK

NAVFAC

COMMONWEALTH OF MASSACHUSETTS — DAVID J. MELO — CIVIL — No. 48692 — REGISTERED PROFESSIONAL ENGINEER — 3/7/16 — SEAL

MNFST A JOINT VENTURE — A/E INFO

APPROVED: David W. Grunfeld — FOR COMMANDER NAVFAC

ACTIVITY: PER DOCUMENT FROM PNSY CODE 980, KITTERY ME

SATISFACTORY TO DATE: 05/09/16

DES: DJM | DRW: RWT | CHK: DWH

PM/DM: NATHAN LIBBY

BRANCH MANAGER: NATHAN MAHER

FEAD/PM&E: AMIN BAHROUR

FIRE PROTECTION: N/A

DEPARTMENT OF THE NAVY
NAVAL FACILITIES ENGINEERING COMMAND
PUBLIC WORKS DEPARTMENT - MAINE
PORTSMOUTH NAVAL SHIPYARD

NAVAL FACILITIES ENGINEERING COMMAND ~ MID-ATLANTIC
NAVAL SHIPYARD ~ PORTSMOUTH, NH

STRUCTURAL REPAIRS AT BERTHS 11A, 11B AND 11C

KITTERY, MAINE

BULKHEAD SHUTTER PANELS SECTIONS & DETAILS ~ SHEET 2 OF 2

EPROJECT NO.: 1356489

CONSTR. CONTR. NO. N40085-XX-C-XXXX

NAVFAC DRAWING NO. 12716087

SHEET 91 OF 144

S-304 | FP2-16-727

DRAWFORM REVISION: 10 OCTOBER 2014

FILE NAME: S:\1794\Active\179410203\x\TP-104A PNSY Lifting Study\TP-104A PNSY Lifting Study\02 CADD\08 Structural\FP2-16-727.dwg LAYOUT NAME: BULKHEAD SHUTTER PANELS SECTIONS & DETAILS - SHEET 2 OF 2 PLOTTED: Friday, May 13, 2016 - 2:49pm USER: cgoodridge

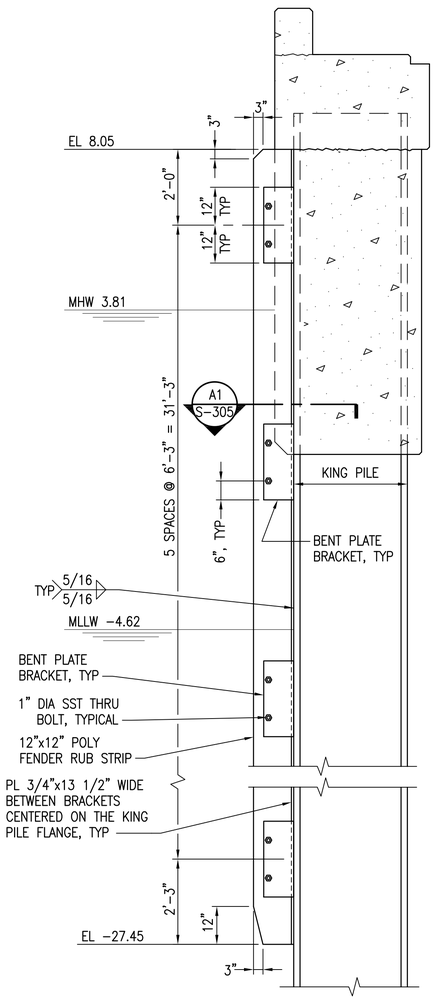

SECTION - POLY FENDER

SCALE: 1/2" = 1'-0" S-305 (B1)

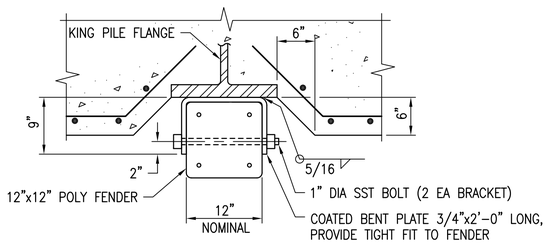

SECTION - FENDER BRACKET

SCALE: 1" = 1'-0" S-305 (A1)

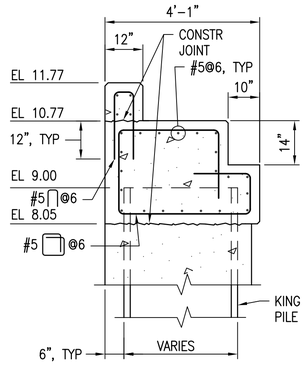

SECTION - BERTH 11A BULKHEAD CAP

SCALE: 1/2" = 1'-0" S-305 (C2)

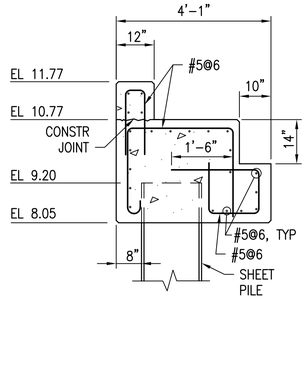

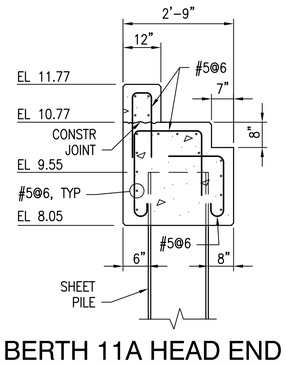

BERTH 11A HEAD END SECTION - SHEET PILE CAP

SCALE: 1/2" = 1'-0" S-305 (C3)

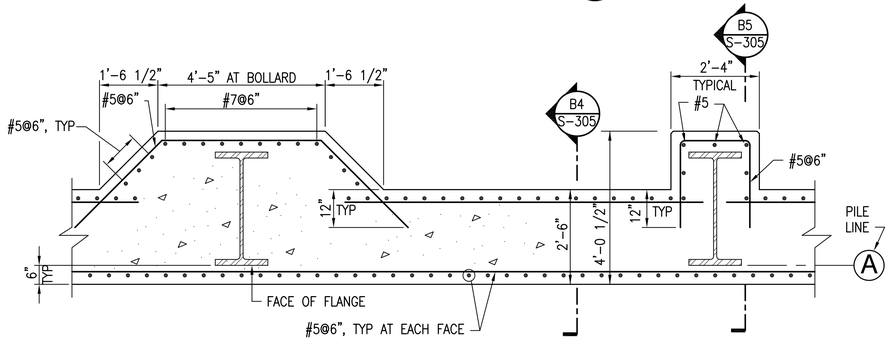

PLAN - BULKHEAD CAP REBAR

SCALE: 1/2" = 1'-0" S-305 (B2)

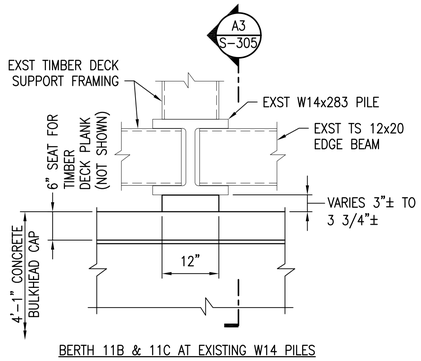

BERTH 11B & 11C AT EXISTING W14 PILES

PART PLAN - BULKHEAD CAP

SCALE: 3/4"=1'-0" S-305 (A2)

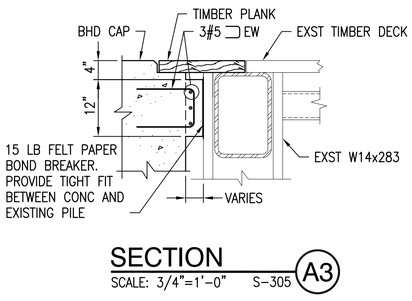

SECTION

SCALE: 3/4"=1'-0" S-305 (A3)

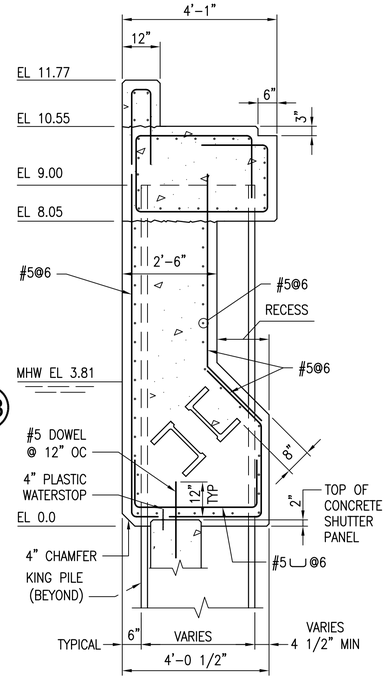

NOTE: CONTRACTOR MAY ELIMINATE THE RECESS AND PROVIDE CONSTANT WIDTH LOWER CONCRETE CAP SECTION AS DETAILED ON (B5)

SECTION - 11B AND 11C BULKHEAD CAP

SCALE: 1/2" = 1'-0" S-305 (B4)

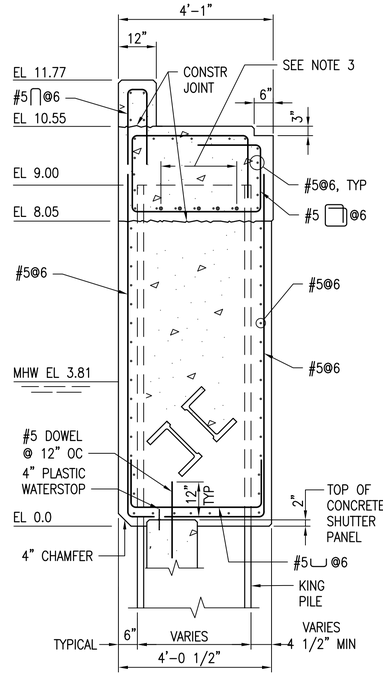

SECTION - 11B AND 11C BULKHEAD CAP @ KING PILE

SCALE: 1/2" = 1'-0" S-305 (B5)

NOTES:

1. CONCRETE LOWER SECTION OF CAP SHALL BE PLACED IN THE DRY ON A FALLING TIDE. WORK OUTSIDE NORMAL HOURS WILL BE ALLOWED TO ACCOMMODATE THIS REQUIREMENT UPON APPROVAL BY THE CONTRACTING OFFICER.
2. PROVIDE VERTICAL CONSTRUCTION JOINTS AT 40'-0" MAX SPACING. STAGGER JOINTS 2'-0" MIN BETWEEN ADJACENT LOWER CAP, UPPER CAP, AND CURB PLACEMENTS.
3. AT BOLLARD LOCATIONS, BURN 1 1/4" DIA HOLES THROUGH KING PILE WEB AND PROVIDE 5 NO 7 BARS BY 8 FEET LONG, LAP SPLICED WITH TYPICAL NO 5 BARS.

FENDER NOTES:

1. SIXTEEN POLY FENDERS WILL BE FURNISHED BY THE GOVERNMENT AND INSTALLED BY THE CONTRACTOR. THE FENDERS HAVE THE TOP AND BOTTOM CHAMFERS, BUT DO NOT HAVE HOLES REQUIRED FOR THE BRACKET BOLTS. THE FENDERS ARE STOCKPILED ON THE BERTH 1 & 2 PIER.
2. ANY ADDITIONAL POLY FENDERS REQUIRED SHALL BE FURNISHED AND INSTALLED BY THE CONTRACTOR.

1/2"=1'-0" 4' 3' 2' 1' 0 4'

3/4"=1'-0" 1' 0' 1' 2' 4'

GRAPHIC SCALE

1"=1'-0" 1' 6" 0 1' 3' 9" 3"

CHECK GRAPHIC SCALE BEFORE USING

APPR	DATE	DESCRIPTION	MK

NAVFAC

DONALD W. HARVIE CIVIL No. 13022 REGISTERED PROFESSIONAL ENGINEER 3/7/16 SEAL

MN FST A JOINT VENTURE A/E INFO

APPROVED (Date) David W. Trumfield FOR COMMANDER NAVFAC

ACTIVITY: PER DOCUMENT FROM PNSY CODE 980, KITTERY ME

SATISFACTORY TO DATE: 05/09/16

DES: DWH | DRW: RWT | CHK: DWH

PM/DM: NATHAN LIBBY

BRANCH MANAGER: NATHAN MAHER

FEAD/PM&E: AMIN BAHROUR

FIRE PROTECTION: N/A

DEPARTMENT OF THE NAVY
NAVAL FACILITIES ENGINEERING COMMAND
PUBLIC WORKS DEPARTMENT - MAINE
PORTSMOUTH NAVAL SHIPYARD

NAVAL FACILITIES ENGINEERING COMMAND – MID-ATLANTIC
NAVAL SHIPYARD – PORTSMOUTH, NH
KITTERY, MAINE

STRUCTURAL REPAIRS AT BERTHS 11A, 11B AND 11C

BULKHEAD CONCRETE SECTIONS & DETAILS

EPROJECT NO.: 1356489

CONSTR. CONTR. NO. N40085-XX-C-XXXX

NAVFAC DRAWING NO. 12716088

SHEET 92 OF 144

S-305 | FP2-16-728

DRAWFORM REVISION: 10 OCTOBER 2014

FILE NAME: S:\1794\Active\179410203\VTP-104A PNSY Lifting Study\TP-104A PNSY Lifting Study\02 CAD\08 Structural\FP2-16-728.dwg LAYOUT NAME: BULKHEAD CONCRETE SECTIONS & DETAILS PLOTTED: Friday, May 13, 2016 - 2:50pm USER: cgoodridge

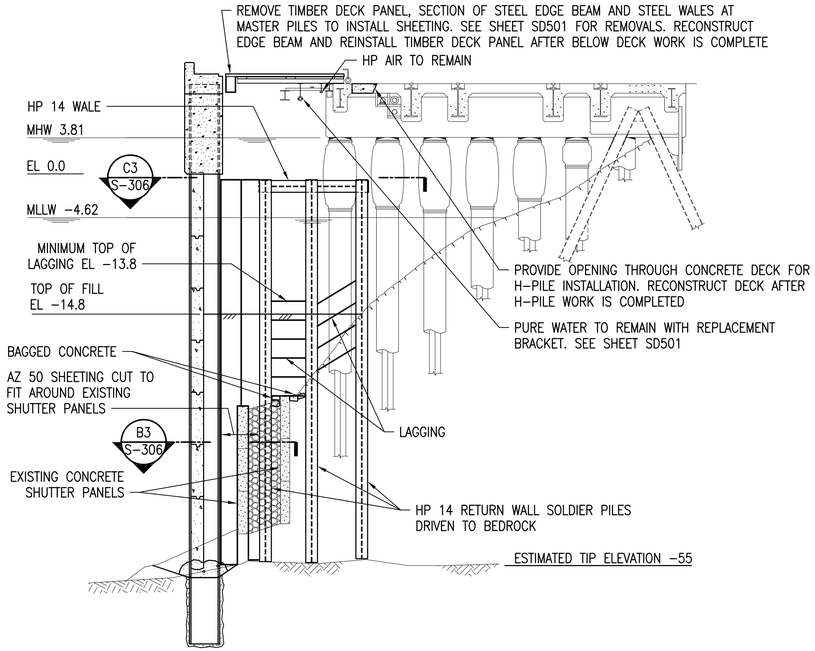

SECTION AT BULKHEAD RETURN - BASE BID C1

SCALE: 1/8" = 1'-0" S-306

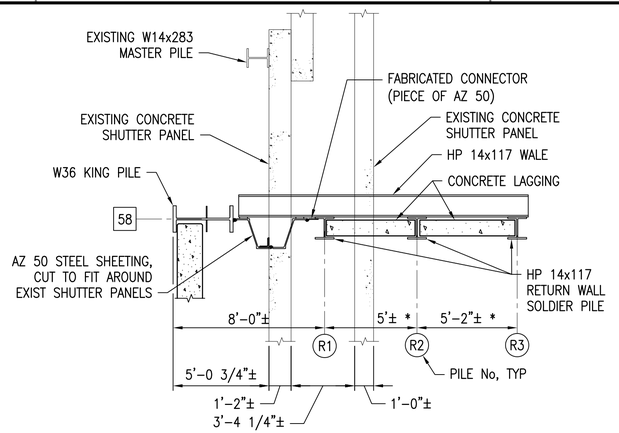

* ADJUST SOLDIER PILE SPACING AS NECESSARY TO AVOID EXISTING UTILITIES AND STEEL FRAMING SUPPORTING TIMBER DECK

SECTION C3

SCALE: 1/4" = 1'-0" S-306

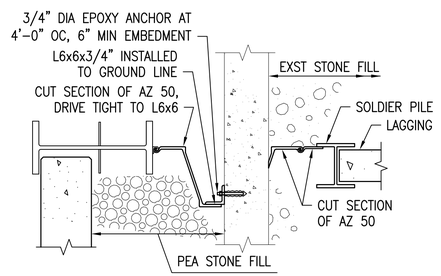

SECTION B3

SCALE: 1/2" = 1'-0" S-306

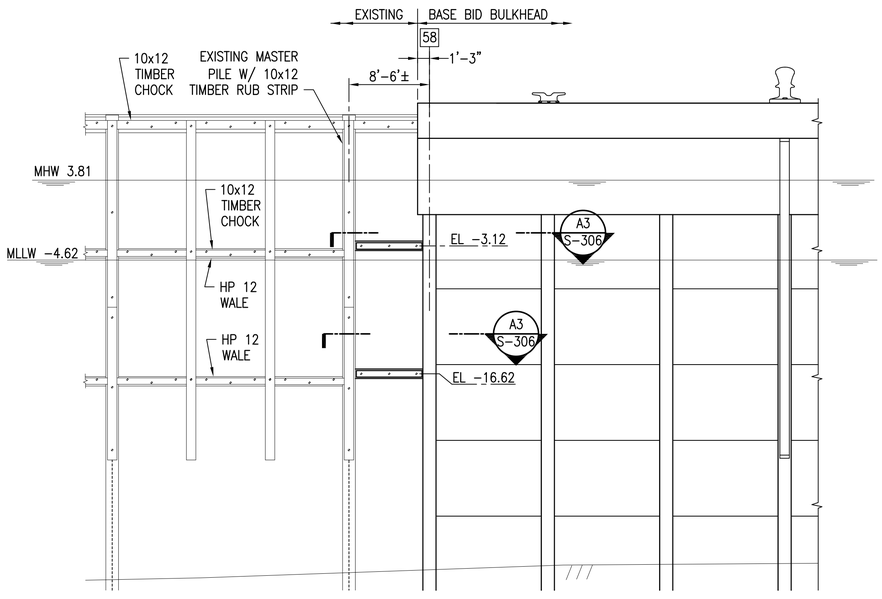

ELEVATION AT BASE BID BULKHEAD END A1

SCALE: 1/8" = 1'-0" S-105

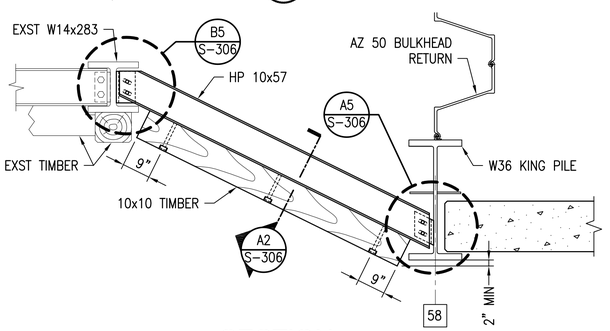

SECTION A3

SCALE: 1/2" = 1'-0" S-306

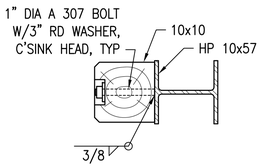

SECTION A2

SCALE: 1" = 1'-0" S-306

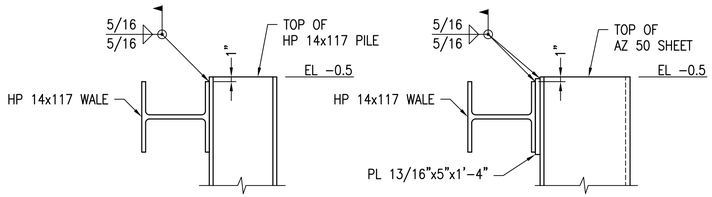

DETAIL - WALE D4

SCALE: 3/4" = 1'-0"

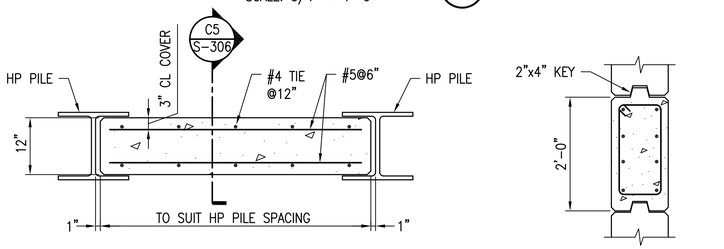

DETAIL - CONCRETE LAGGING C4

SCALE: 3/4" = 1'-0"

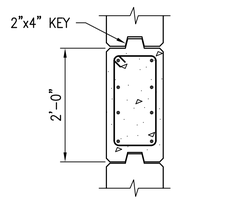

SECTION C5

SCALE: 3/4" = 1'-0"

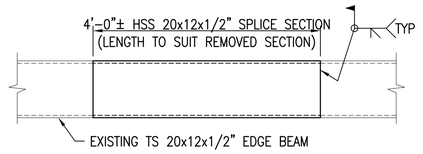

DETAIL - EDGE BEAM B4

SCALE: 3/4" = 1'-0"

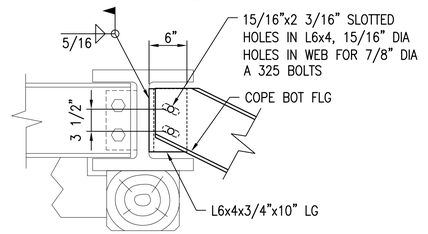

DETAIL B5

SCALE: 1" = 1'-0" S-306

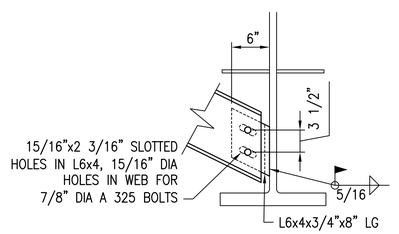

DETAIL A5

SCALE: 1" = 1'-0" S-306

1/4"=1'-0" 4' 0 4' 8'

3/4"=1'-0" 1' 0' 1' 2' 4'

GRAPHIC SCALE

1/8"=1'-0" 4' 0 4' 8' 12' 16'

CHECK GRAPHIC SCALE BEFORE USING

APPR	DATE	DESCRIPTION	STA

NAVFAC

DONALD W. HARVIE CIVIL No. 21022 REGISTERED PROFESSIONAL ENGINEER 3/7/16 SEAL

MNFST A JOINT VENTURE A/E INFO

APPROVED David W. Trumfield FOR COMMANDER NAVFAC

ACTIVITY: PER DOCUMENT FROM PNSY CODE 980, KITTERY ME

SATISFACTORY TO DATE: 05/09/16

DES: DWH DRW: RWT CHK: DWH

PM/DM: NATHAN LIBBY

BRANCH MANAGER: NATHAN MAHER

FEAD/PM&E: AMIN BAHROUR

FIRE PROTECTION: N/A

DEPARTMENT OF THE NAVY
NAVAL FACILITIES ENGINEERING COMMAND
PUBLIC WORKS DEPARTMENT - MAINE
PORTSMOUTH NAVAL SHIPYARD

NAVAL FACILITIES ENGINEERING COMMAND ~ MID-ATLANTIC
NAVAL SHIPYARD - PORTSMOUTH, NH
KITTERY, MAINE

STRUCTURAL REPAIRS AT BERTHS 11A, 11B AND 11C

BULKHEAD RETURN SECTION & DETAILS

EPROJECT NO.: 1356489

CONSTR. CONTR. NO. N40085-XX-C-XXXX

NAVFAC DRAWING NO. 12716089

SHEET 93 OF 144

S-306 FP2-16-729

DRAWFORM REVISION: 10 OCTOBER 2014

FILE NAME: S:\1794\Active\179410203\VP-1044 PNSY Lifting Study\VP-1044 PNSY Lifting Study\02 CADD\08 Structural\FP2-16-729.dwg LAYOUT NAME: BULKHEAD RETURN SECTION & DETAILS PLOTTED: Friday, May 13, 2016 - 2:50pm USER: cgoodridge

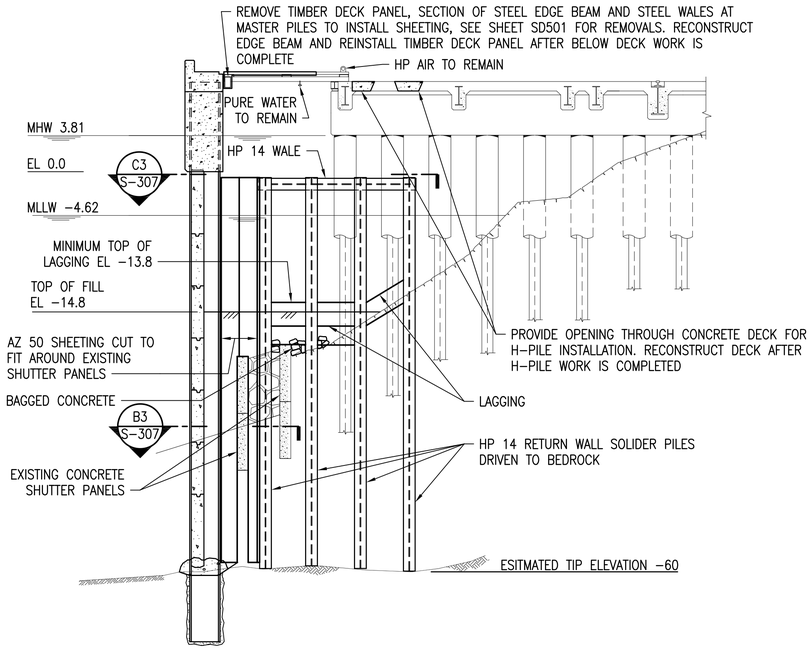

SECTION AT BULKHEAD RETURN - BID OPTION 1 (C1)

SCALE: 1/8" = 1'−0" S-307

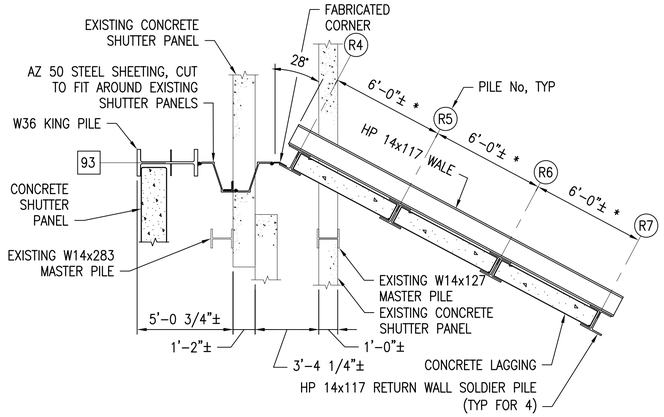

* ADJUST SOLDIER PILE SPACING AS NECESSARY TO AVOID EXISTING UTILITIES AND STEEL FRAMING SUPPORTING TIMBER DECK

SECTION (C3)

SCALE: 1/4" = 1'−0" S-307

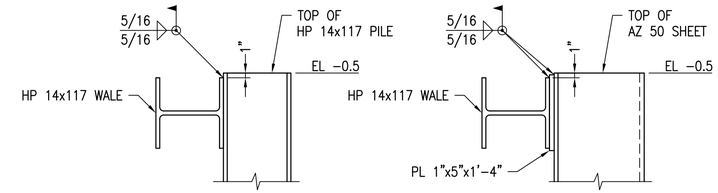

DETAIL - WALE (D4)

SCALE: 3/4" = 1'−0"

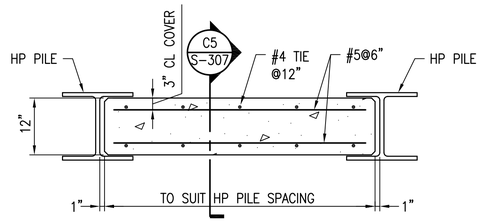

DETAIL - CONCRETE LAGGING (C4)

SCALE: 3/4" = 1'−0"

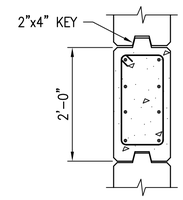

SECTION (C5)

SCALE: 3/4" = 1'−0"

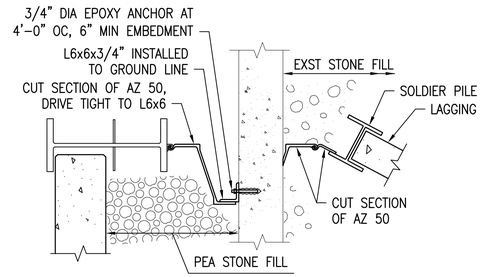

SECTION (B3)

SCALE: 1/2"=1'−0" S-307

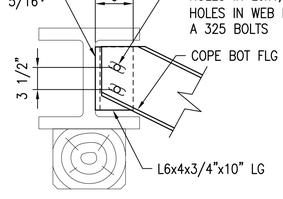

DETAIL (B4)

SCALE: 1"=1'−0" S-307

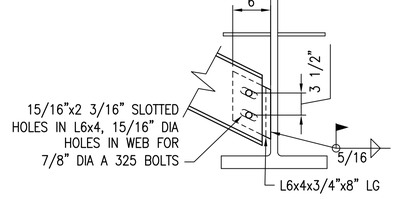

DETAIL (B5)

SCALE: 1"=1'−0" S-307

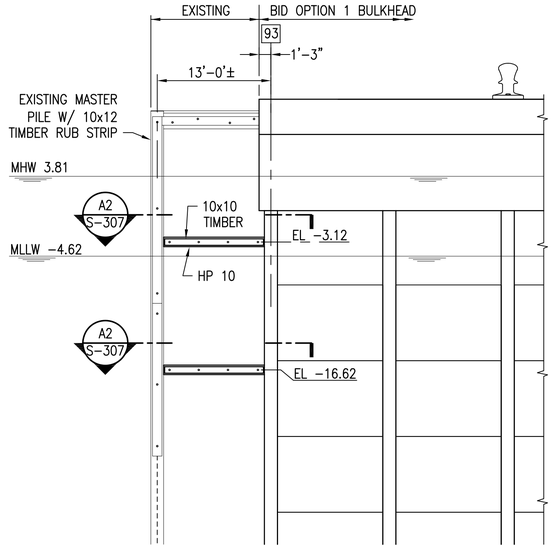

ELEVATION - BULKHEAD END (A1)

SCALE: 1/8" = 1'−0" S-307

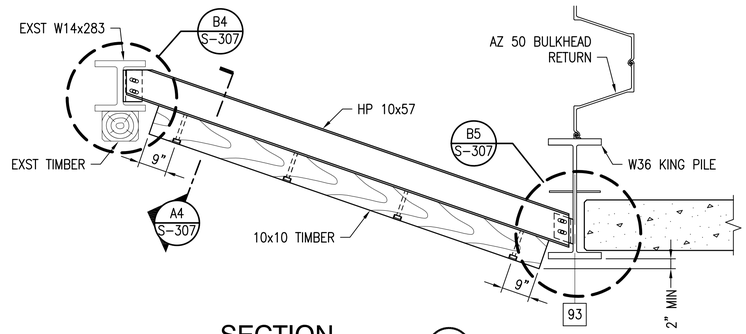

SECTION (A2)

SCALE: 1/2" = 1'−0" S-307

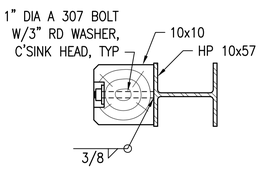

SECTION (A4)

SCALE: 1"=1'−0" S-307

NOTE:

FOR EDGE BEAM SPLICE DETAIL SEE S-306

1/4"=1'−0" 4' 0 4' 8'

3/4"=1'−0" 1' 0' 1' 2' 4'

GRAPHIC SCALE

1/8"=1'−0" 4' 0 4' 8' 12' 16'

CHECK GRAPHIC SCALE BEFORE USING

DEPARTMENT OF THE NAVY	NAVAL FACILITIES ENGINEERING COMMAND – MID-ATLANTIC
PUBLIC WORKS DEPARTMENT – MAINE	NAVAL SHIPYARD – PORTSMOUTH, NH
PORTSMOUTH NAVAL SHIPYARD	KITTERY, MAINE
STRUCTURAL REPAIRS AT BERTHS 11A, 11B AND 11C	
BULKHEAD RETURN SECTION & DETAILS	
EPROJECT NO.: 1356489	
CONSTR. CONTR. NO.: N40085-XX-C-XXXX	
NAVFAC DRAWING NO.: 12716090	
SHEET 94 OF 144	
S-307 FP2-16-730	

DRAWFORM REVISION: 10 OCTOBER 2014

APPROVED: David W. Grunfeld FOR COMMANDER NAVFAC

ACTIVITY: PER DOCUMENT FROM PNSY CODE 980, KITTERY ME

SATISFACTORY TO DATE: 05/09/16

DES: DWH DRW: RWT CHK: DWH

PM/DM: NATHAN LIBBY

BRANCH MANAGER: NATHAN MAHER

FEAD/PM&E: AMIN BAHROUR

FIRE PROTECTION: N/A

DONALD W. HARVIE CIVIL No. 13022 REGISTERED PROFESSIONAL ENGINEER 3/7/16 SEAL

MNFST A JOINT VENTURE A/E INFO

APPR | DATE | DESCRIPTION | MJS

FILE NAME: S:\1794\Active\179410203\VTP-104A PNSY Lifting Study\TP-104A PNSY Lifting Study\02 CAD\08 Structural\FP2-16-730.dwg LAYOUT NAME: BULKHEAD RETURN SECTION & DETAILS PLOTTED: Friday, May 13, 2016 - 2:50pm USER: cgoodridge

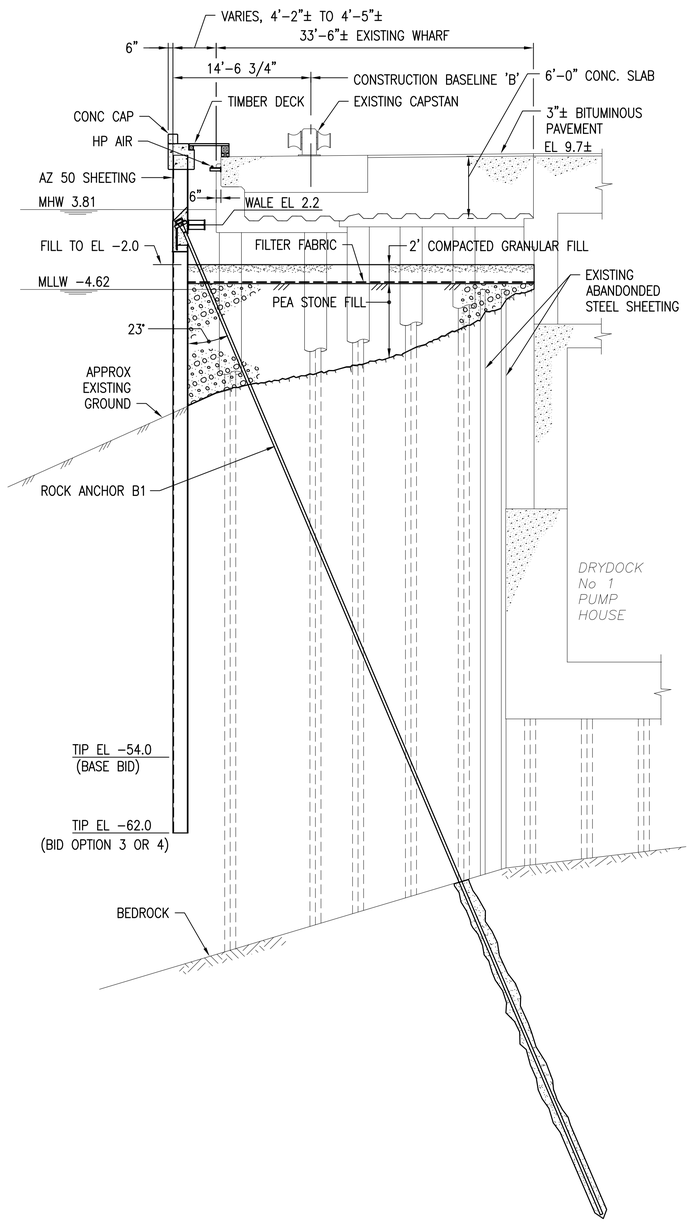

SECTION BERTH 11A HEAD END @ ROCK ANCHOR B1 (A1)

SCALE: 1/8" = 1'-0" S-104

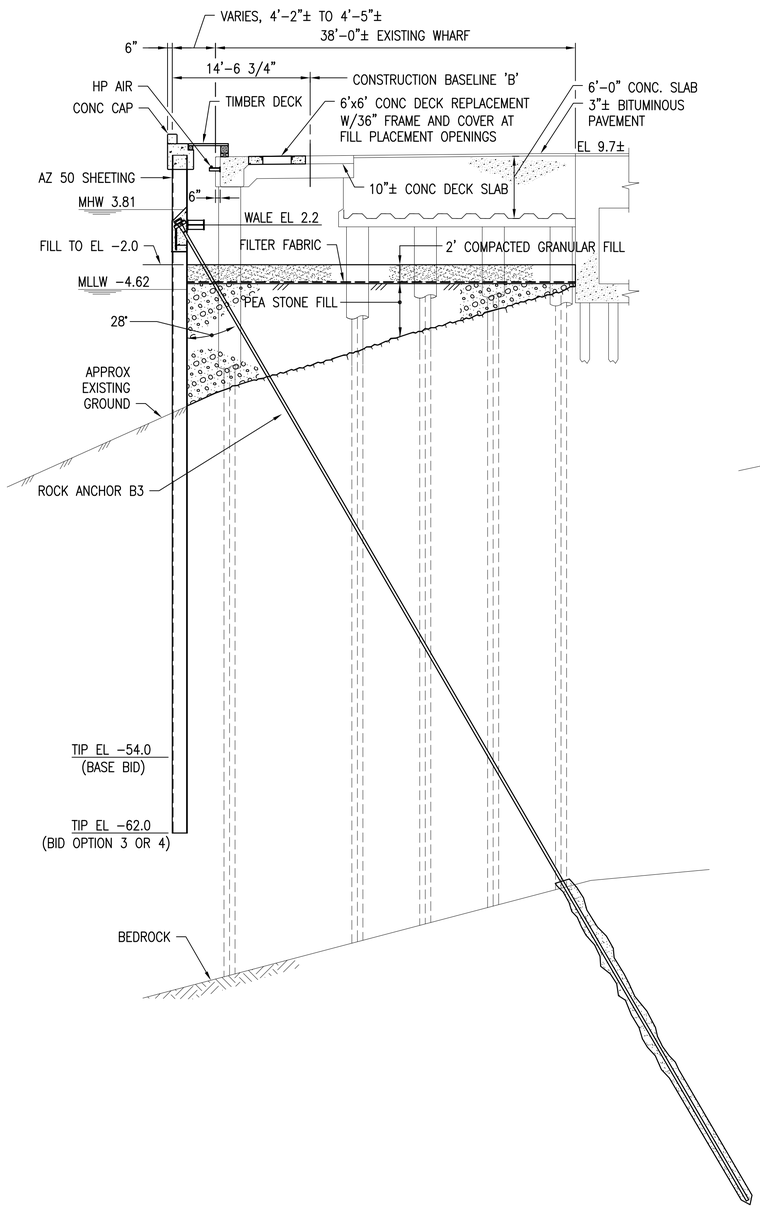

SECTION BERTH 11A HEAD END @ ROCK ANCHOR B3 (A3)

SCALE: 1/8" = 1'-0" S-104

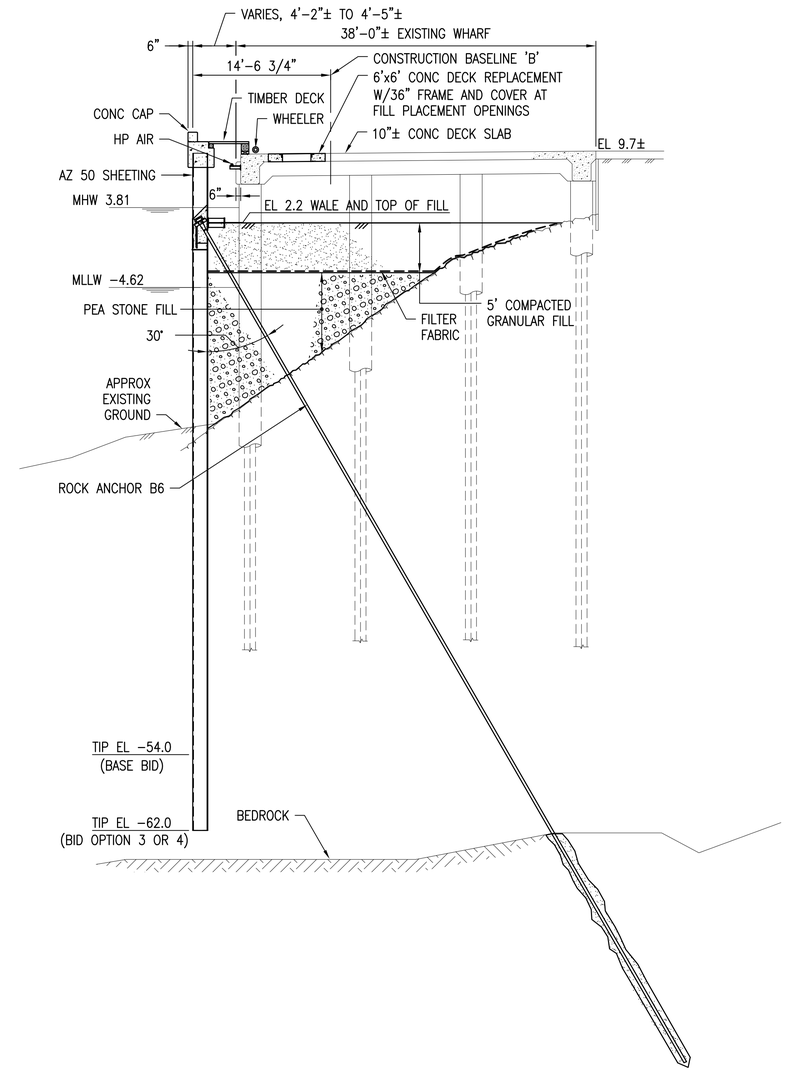

SECTION BERTH 11A HEAD END @ ROCK ANCHOR B6 (A4)

SCALE: 1/8" = 1'-0" S-104

GRAPHIC SCALE

1/8"=1'-0" 4' 0 4' 8' 12' 16'

CHECK GRAPHIC SCALE BEFORE USING

SYM	DESCRIPTION	DATE	APPR

NAVFAC

DONALD W. HARVIE CIVIL No. 31070 REGISTERED PROFESSIONAL ENGINEER

3/7/16

SEAL

MN FST A JOINT VENTURE

A/E INFO

APPROVED David W. Greenfield

FOR COMMANDER NAVFAC

ACTIVITY: PER DOCUMENT FROM PNSY CODE 980, KITTERY ME

SATISFACTORY TO DATE: 05/09/16

DES DJM DRW RWT CHK DWH

PM/DM: NATHAN LIBBY

BRANCH MANAGER: NATHAN MAHER

FEAD/PM&E: AMIN BAHROUR

FIRE PROTECTION: N/A

DEPARTMENT OF THE NAVY
NAVAL FACILITIES ENGINEERING COMMAND
NAVAL FACILITIES ENGINEERING COMMAND ~ MID-ATLANTIC
PUBLIC WORKS DEPARTMENT - MAINE
NAVAL SHIPYARD - PORTSMOUTH, NH

PORTSMOUTH NAVAL SHIPYARD

KITTERY, MAINE

STRUCTURAL REPAIRS AT BERTHS 11A, 11B AND 11C

SHEET PILE BULKHEAD SECTIONS

EPROJECT NO.: 1356489

CONSTR. CONTR. NO. N40085-XX-C-XXXX

NAVFAC DRAWING NO. 12716091

SHEET 95 OF 144

S-308 FP2-16-731

DRAWFORM REVISION: 10 OCTOBER 2014

FILE NAME: S:\1794\Active\179410203\\TP-104A PNSY Lifting Study\TP-104A PNSY Lifting Study\02 CADD\08 Structural\FP2-16-731.dwg LAYOUT NAME: SHEET PILE BULKHEAD SECTIONS PLOTTED: Friday, May 13, 2016 - 2:51pm USER: cgoodridge

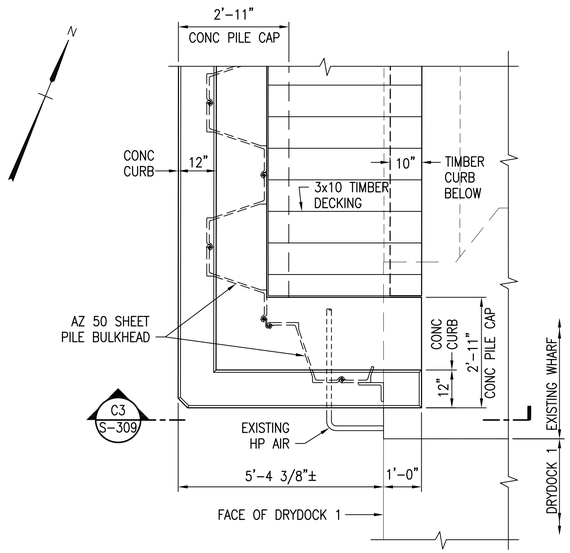

SOUTHEAST END OF SHEET PILE BULKHEAD

PART DECK PLAN

SCALE: 1/2" = 1'-0" S-309 (C1)

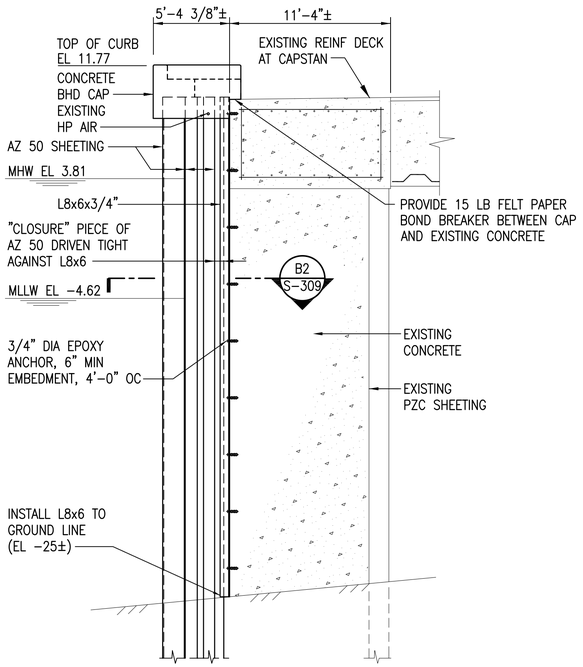

SECTION

SCALE: 3/16" = 1'-0" S-309 (C3)

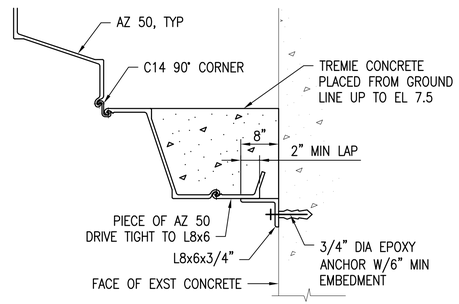

SECTION

SCALE: 3/4"=1'-0" S-309 (B2)

GRAPHIC SCALE

1/2"=1'-0"

4' 3' 2' 1' 0 4'

CHECK GRAPHIC SCALE BEFORE USING

APPR	DATE	DESCRIPTION	SYM

NAVFAC

DONALD W. HARVIE CIVIL No. 21022 REGISTERED PROFESSIONAL ENGINEER
3/7/16
SEAL

MNFST A JOINT VENTURE
A/E INFO

APPROVED
FOR COMMANDER NAVFAC

ACTIVITY:
PER DOCUMENT FROM PNSY CODE 980, KITTERY ME

SATISFACTORY TO DATE: 05/09/16

DES	DWH	DRW	RWT	CHK	DWH

PM/DM: NATHAN LIBBY
BRANCH MANAGER: NATHAN MAHER
FEAD/PM&E: AMIN BAHROUR
FIRE PROTECTION: N/A

DEPARTMENT OF THE NAVY
NAVAL FACILITIES ENGINEERING COMMAND
PUBLIC WORKS DEPARTMENT - MAINE
PORTSMOUTH NAVAL SHIPYARD

NAVAL FACILITIES ENGINEERING COMMAND – MID-ATLANTIC
NAVAL SHIPYARD - PORTSMOUTH, NH
KITTERY, MAINE

STRUCTURAL REPAIRS AT BERTHS 11A, 11B AND 11C

SHEET PILE BULKHEAD TERMINATION SECTIONS & DETAILS

EPROJECT NO.: 1356489
CONSTR. CONTR NO.: N40085-XX-C-XXXX
NAVFAC DRAWING NO.: 12716092
SHEET 96 OF 144
S-309 | FP2-16-732

DRAWFORM REVISION: 10 OCTOBER 2014

FILE NAME: S:\1794\Active\179410203\V1\TP-1044 PNSY Lifting Study\TP-1044 PNSY Lifting Study\02 CAD\08 Structural\FP2-16-732.dwg LAYOUT NAME: SHEET PILE BULKHEAD TERMINATION SECTIONS & DETAILS PLOTTED: Friday, May 13, 2016 - 2:51pm USER: cgoodridge

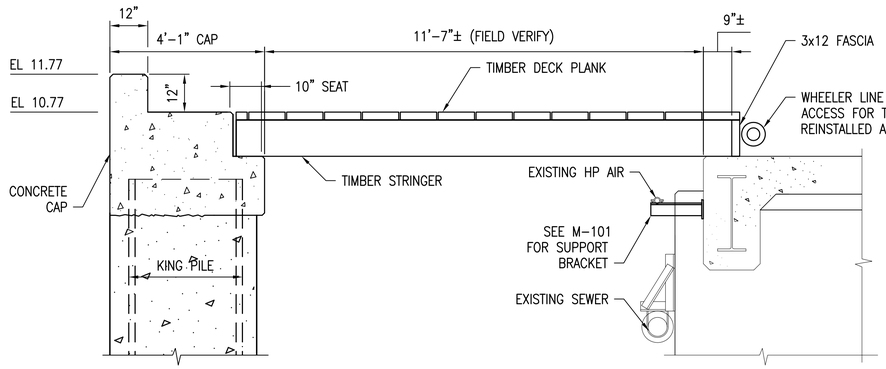

DECK SECTION - BERTH 11A

SCALE: 1/2" = 1'-0" S-310 C1

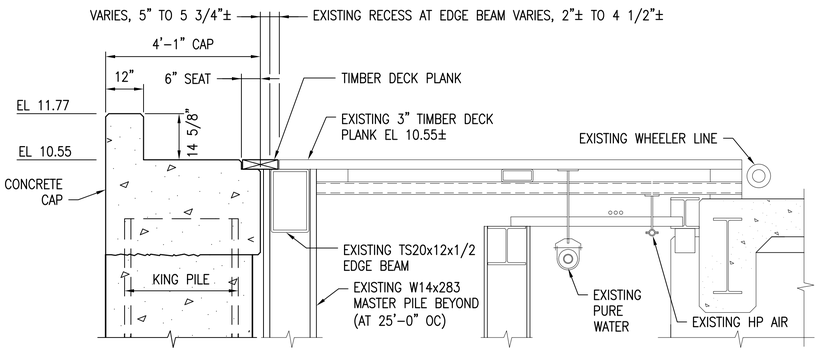

DECK SECTION - BERTH 11B & 11C

SCALE: 1/2" = 1'-0" S-310 C4

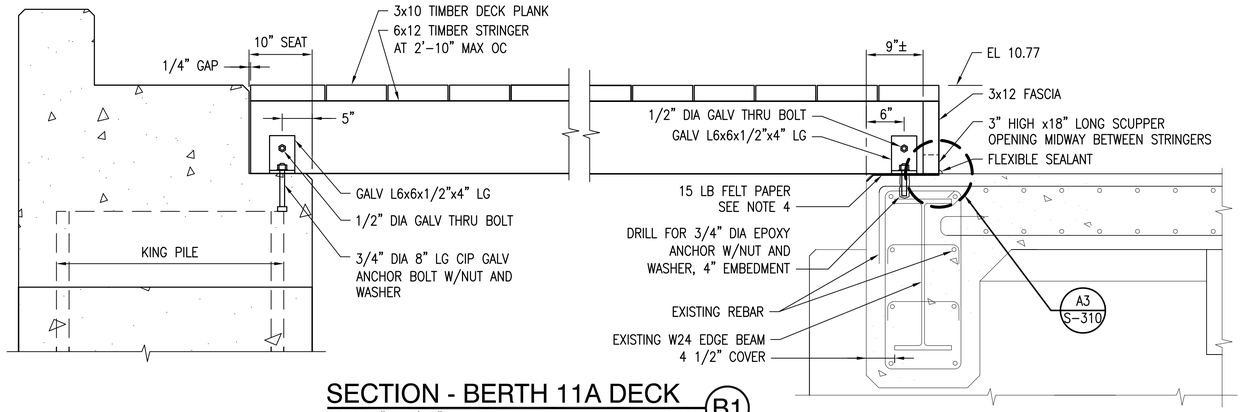

SECTION - BERTH 11A DECK

SCALE: 1" = 1'-0" S-310 B1

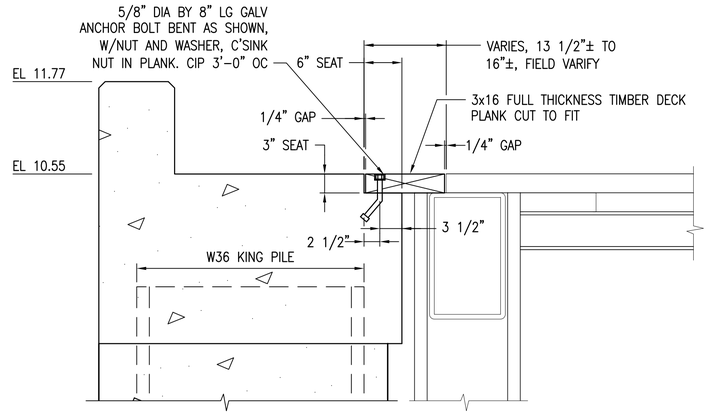

DETAIL - BERTH 11B DECK

SCALE: 1" = 1'-0" S-310 B4

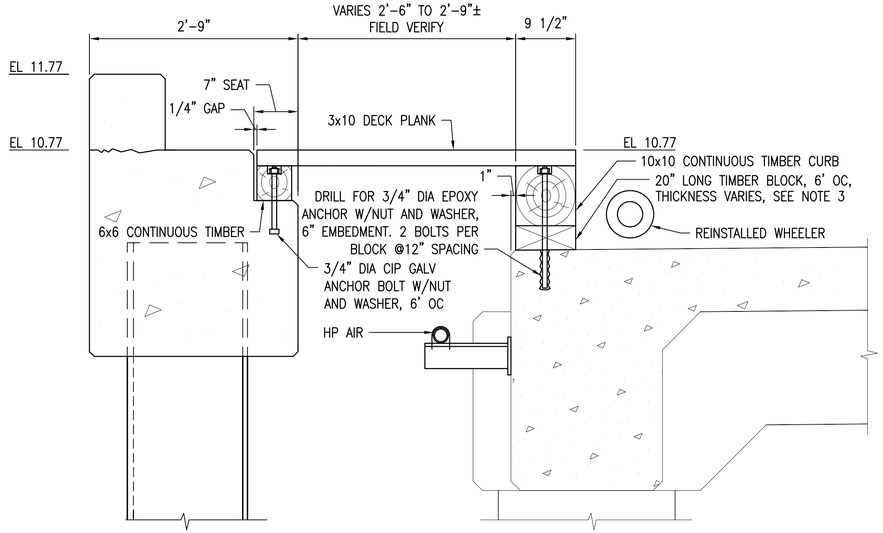

DECK SECTION - BERTH 11A HEAD END

SCALE: 1" = 1'-0" S-310 A1

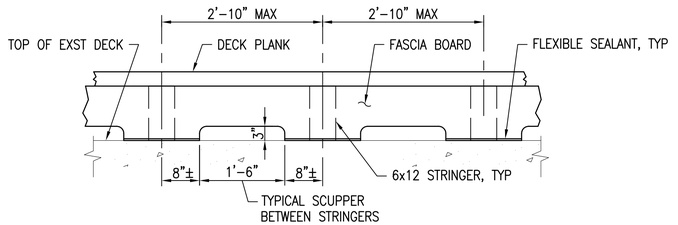

DETAIL - SCUPPER

SCALE: 3/4" = 1'-0" S-310 A3

TIMBER NOTES:

1. LAY TIMBER DECK PLANKS WITH 1/4" OPEN JOINTS. BERTH 11A PLANKS SHALL BE 8' MINIMUM LENGTHS. STAGGER BUTT ENDS.
2. FASTEN DECKING WITH GALVANIZED 3/8" DIA. x 7" FLAT HEAD SPIKES. MINIMUM 2 EACH CROSSING, 4 EACH BUTT.
3. THE TYPICAL THICKNESS OF THE 20 INCH LONG BLOCK BELOW THE 10x10 CURB VARIES FROM APPROXIMATELY 5"± TO 6 1/2"±, EXCEPT AT THE THREE MOST SOUTHERLY BLOCKS WHERE THE THICKNESS VARIES FROM APPROXIMATELY 1 1/2"± TO 3 1/2"±.
4. PROVIDE LEVELING GROUT AND/OR GALVANIZED STEEL SHIMS IF EXISTING SURFACE IS TOO LOW AND GRIND EXISTING CONCRETE DOWN IF EXISTING SURFACE IS TOO HIGH.

1"=1'-0" 1' 6" 0 1' 3' (9" 3")

1/2"=1'-0" 4' 3' 2' 1' 0 4'

GRAPHIC SCALE

3/4"=1'-0" 1' 0' 1' 2' 4'

CHECK GRAPHIC SCALE BEFORE USING

APPR	DATE	DESCRIPTION	MK

NAVFAC

DONALD W. HARVIE CIVIL No. 13022 REGISTERED PROFESSIONAL ENGINEER 3/7/16 SEAL

MN FST A JOINT VENTURE A/E INFO

APPROVED David W. Thurnfield FOR COMMANDER NAVFAC

ACTIVITY: PER DOCUMENT FROM PNSY CODE 980, KITTERY ME

SATISFACTORY TO DATE: 05/09/14

DES DWH | DRW RWT | CHK DWH

PM/DM: NATHAN LIBBY

BRANCH MANAGER: NATHAN MAHER

FEAD/PM&E: AMIN BAHROUR

FIRE PROTECTION: N/A

DEPARTMENT OF THE NAVY
NAVAL FACILITIES ENGINEERING COMMAND
PUBLIC WORKS DEPARTMENT - MAINE
PORTSMOUTH NAVAL SHIPYARD

NAVAL FACILITIES ENGINEERING COMMAND ~ MID-ATLANTIC
NAVAL SHIPYARD - PORTSMOUTH, NH
KITTERY, MAINE

STRUCTURAL REPAIRS AT BERTHS 11A, 11B AND 11C

TIMBER DECK SECTIONS & DETAILS

EPROJECT NO.: 1356489

CONSTR. CONTR. NO.: N40085-XX-C-XXXX

NAVFAC DRAWING NO.: 12716093

SHEET 97 OF 144

S-310 | FP2-16-733

DRAWFORM REVISION: 10 OCTOBER 2014

FILE NAME: S:\1794\Active\179410203\V\TP-1044 PNSY Lifting Study\TP-1044 PNSY Lifting Study\02 CAD\08 Structure\FP2-16-733.dwg LAYOUT NAME: TIMBER DECK SECTIONS & DETAILS PLOTTED: Friday, May 13, 2016 - 2:51pm USER: cgoodridge

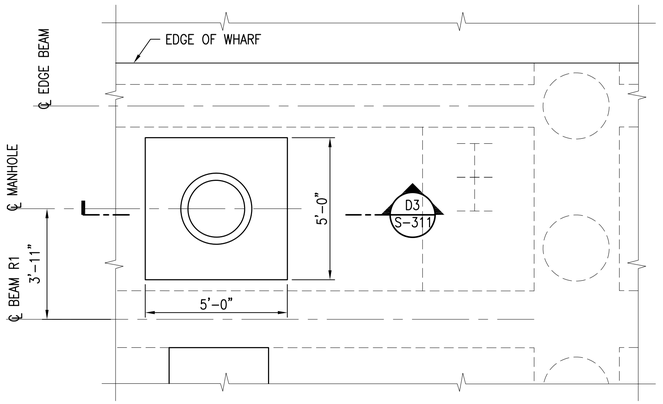

PLAN AT 5 FT x 5 FT DECK PLACEMENT C1

SCALE: 3/8"=1'-0" S-311

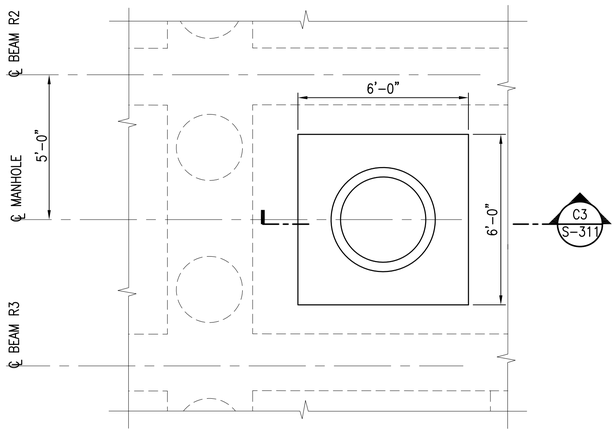

PLAN AT 6 FT x 6 FT DECK PLACEMENT B1

SCALE: 3/8"=1'-0" S-311

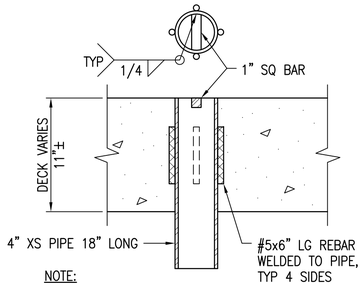

NOTE:

SEE SHEETS S-108 THROUGH S-111 FOR DRAIN LOCATIONS. HOT DIP GALVANIZE ASSEMBLY AFTER FABRICATION

CAST INTO CONCRETE

DETAIL - DECK DRAIN A1

SCALE: 1 1/2" = 1'-0" S-311

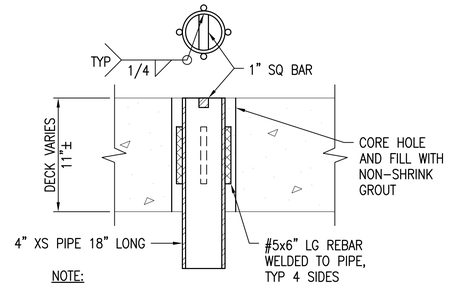

NOTE:

SEE SHEETS S-108 THROUGH S-111 FOR DRAIN LOCATIONS. HOT DIP GALVANIZE ASSEMBLY AFTER FABRICATION

CORED THROUGH EXISTING CONCRETE

DETAIL - DECK DRAIN A1

SCALE: 1 1/2" = 1'-0" S-311

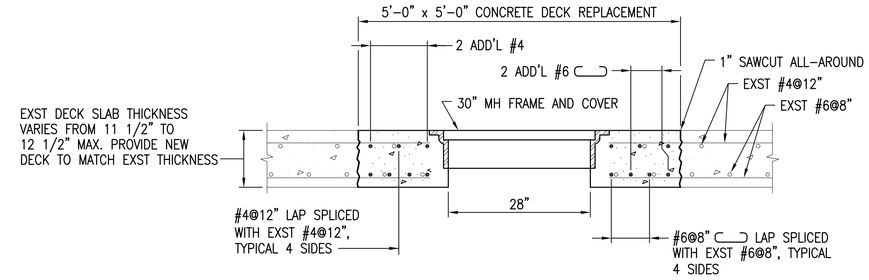

SECTION D3

SCALE: 3/4"=1'-0" S-311

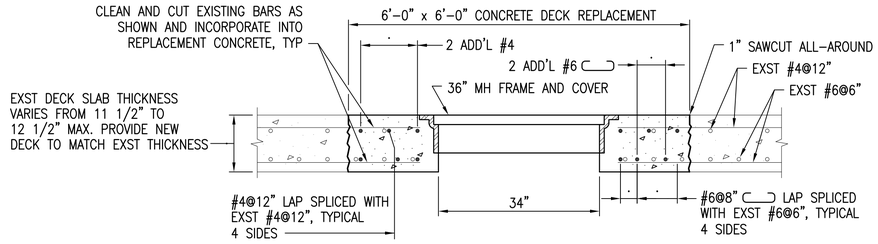

SECTION C3

SCALE: 3/4"=1'-0" S-311

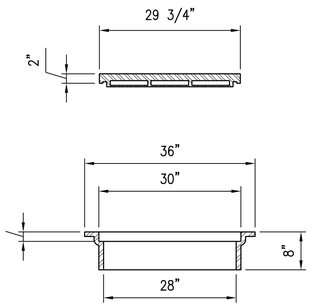

DETAIL - 30 INCH FRAME AND COVER C5

SCALE: 3/4" = 1'-0" S-311

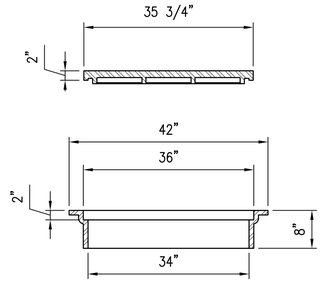

DETAIL - 36 INCH FRAME AND COVER B5

SCALE: 3/4" = 1'-0" S-311

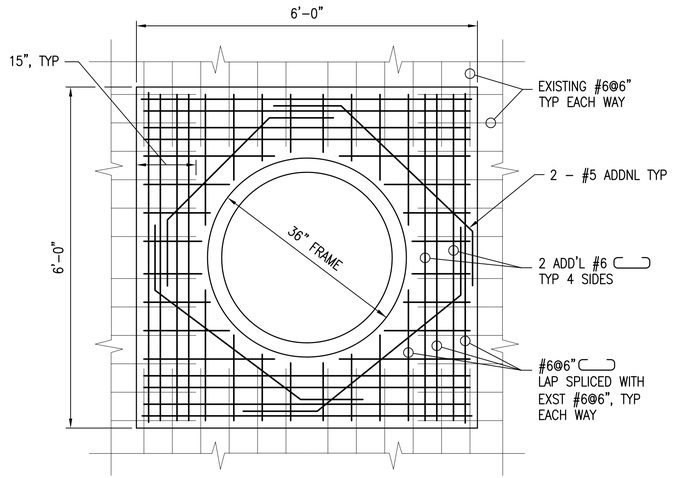

PLAN - 6 FT x 6FT SLAB BOTTOM REINFORCEMENT A4

SCALE: 3/4" = 1'-0" S-311

GRAPHIC SCALE

3/4"=1'-0" 1' 0' 1' 2' 4'

CHECK GRAPHIC SCALE BEFORE USING

APPR	DATE	DESCRIPTION	MJS

NAVFAC

DONALD W. HARVIE CIVIL No. 21022 REGISTERED PROFESSIONAL ENGINEER
3/7/16
SEAL

MN FST A JOINT VENTURE
A/E INFO

APPROVED
David W. Grunfeld
FOR COMMANDER NAVFAC

ACTIVITY:
PER DOCUMENT FROM PNSY
CODE 980, KITTERY ME

SATISFACTORY TO DATE: 05/09/16

DES	DWH	DRW	CHG	CHK	DWH

PM/DM: NATHAN LIBBY
BRANCH MANAGER: NATHAN MAHER
FEAD/PM&E: AMIN BAHROUR
FIRE PROTECTION: N/A

DEPARTMENT OF THE NAVY
NAVAL FACILITIES ENGINEERING COMMAND
PUBLIC WORKS DEPARTMENT - MAINE
PORTSMOUTH NAVAL SHIPYARD

NAVAL FACILITIES ENGINEERING COMMAND - MID-ATLANTIC
NAVAL SHIPYARD - PORTSMOUTH, NH
KITTERY, MAINE

STRUCTURAL REPAIRS
AT BERTHS 11A, 11B AND 11C

CONCRETE DECK SECTIONS & DETAILS

EPROJECT NO.: 1356489

CONSTR. CONTR. NO.
N40085-XX-C-XXXX

NAVFAC DRAWING NO.
12716094

SHEET 98 OF 144

S-311 FP2-16-734

DRAWFORM REVISION: 10 OCTOBER 2014

FILE NAME: S:\1794\Active\179410203\VTP-104A PNSY Lifting Study\TP-104A PNSY Lifting Study\02 CAD\08 Structural\FP2-16-734.dwg LAYOUT NAME: CONCRETE DECK SECTIONS & DETAILS PLOTTED: Friday, May 13, 2016 - 2:52pm USER: cgoodridge

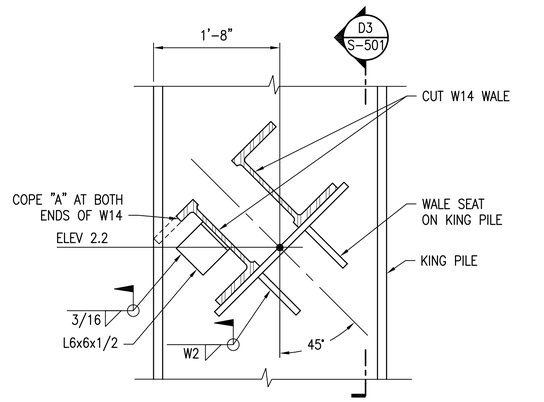

SECTION - KING PILE WALE ASSEMBLY C1

SCALE: 1" = 1'-0" S-501

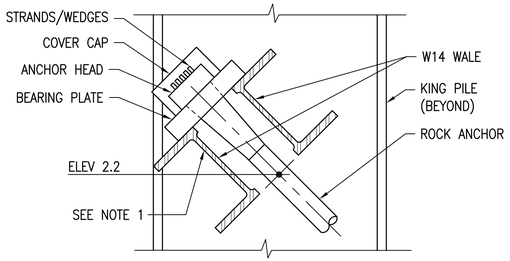

SECTION - WALE WITH ROCK ANCHOR B1

SCALE: 1" = 1'-0" S-501

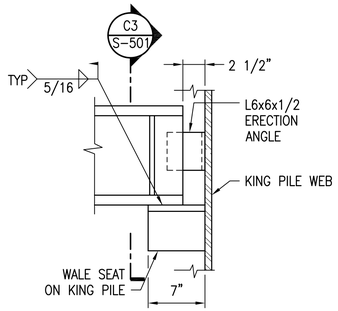

SECTION C3

SCALE: 1" = 1'-0" S-501

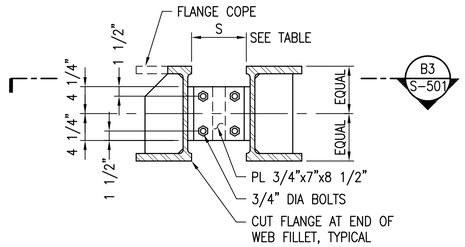

SECTION C3

SCALE: 1" = 1'-0" S-501

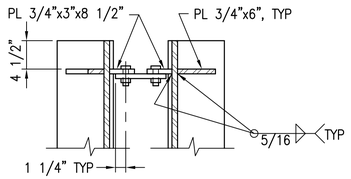

SECTION B3

SCALE: 1" = 1'-0" S-501

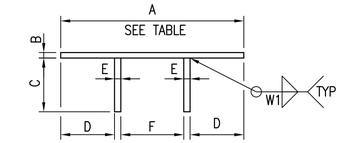

ELEVATION

DETAIL - WALE SEAT D4

SCALE: 1" = 1'-0" S-501

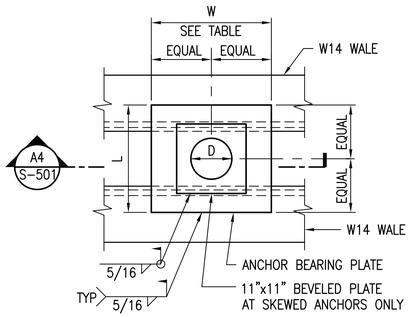

DETAIL - BEARING PLATE A3

SCALE: 1" = 1'-0" S-501

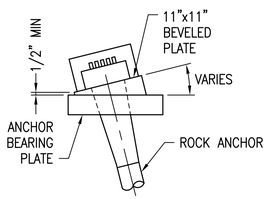

SECTION A4

SCALE: 1" = 1'-0" S-501

BRACKET TYPE

		BR1	BR2	BR3
	LOCATION	WALE TYPE 1	WALE TYPE 2	WALE TYPE 3
WALE	WALE SIZE	W14x145	W14x159	W14x176
	COPE A	5"x12"	5"x12"	6"x12"
	S	6 1/2"	7 1/2"	7 1/2"
WALE SEAT PLATES	A	27"	28"	28"
	B	1"	1"	1"
	C	10 1/2"	10 1/2"	10 1/2"
	D	8 1/8"	8 3/8"	8"
	E	7/8"	7/8"	1"
	F	9"	9 1/2"	10"
WALE SEAT WELDS	W1	9/16"	9/16"	5/8"
	W2	1/2"	1/2"	9/16"
ANCHOR BEARING PLATE	W	1'-6"	1'-6"	1'-6"
	L	1'-3"	1'-3"	1'-3"
	T	3"	3"	3 1/4"
	D	6 1/2" MAX*	7 1/2" MAX*	7 1/2" MAX*

*HOLE DIAMETER AS REQUIRED PER STRAND MANUFACTURER UP TO MAXIMUM DIAMETER SPECIFIED

NOTE:

PROVIDE 1 1/2" DIA HOLES IN WEB AT 2'-0" O.C. IN LOWER WALE TO PREVENT VOIDS IN CONCRETE CAP POUR. DO NOT PROVIDE HOLES WITHIN 2' OF WALE END OR WITHIN 2' OF BEARINGS PLATES.

GRAPHIC SCALE

1"=1'-0"

1' 6" 0 1' 3'

9" 3"

CHECK GRAPHIC SCALE BEFORE USING

APPR | DATE | DESCRIPTION | MK

NAVFAC

DONALD W. HARVIE CIVIL No. 13023 REGISTERED PROFESSIONAL ENGINEER
3/7/16
SEAL

MNFST A JOINT VENTURE
A/E INFO

APPROVED
David W. Grunfeld
FOR COMMANDER NAVFAC

ACTIVITY:
PER DOCUMENT FROM PNSY
CODE 980, KITTERY ME

SATISFACTORY TO DATE: 05/09/16

DES: DJM | DRW: RWT | CHK: DJM

PM/DM: NATHAN LIBBY

BRANCH MANAGER: NATHAN MAHER

FEAD/PM&E: AMIN BAHROUR

FIRE PROTECTION: N/A

DEPARTMENT OF THE NAVY
NAVAL FACILITIES ENGINEERING COMMAND
PUBLIC WORKS DEPARTMENT - MAINE
PORTSMOUTH NAVAL SHIPYARD

NAVAL FACILITIES ENGINEERING COMMAND ~ MID-ATLANTIC
NAVAL SHIPYARD ~ PORTSMOUTH, NH
KITTERY, MAINE

STRUCTURAL REPAIRS
AT BERTHS 11A, 11B AND 11C

BULKHEAD WALE DETAILS ~ SHEET 1 OF 2

EPROJECT NO.: 1356489

CONSTR. CONTR. NO.
N40085-XX-C-XXXX

NAVFAC DRAWING NO.
12716095

SHEET 99 OF 144

S-501 | FP2-16-735

DRAWFORM REVISION: 10 OCTOBER 2014

FILE NAME: S:\1794\Active\179410203\VP-104A PNSY Lifting Study\VP-104A PNSY Lifting Study\02 CADD\08 Structural\FP2-16-735.dwg LAYOUT NAME: BULKHEAD WALE DETAILS - SHEET 1 OF 2 PLOTTED: Friday, May 13, 2016 - 2:52pm USER: cgoodridge

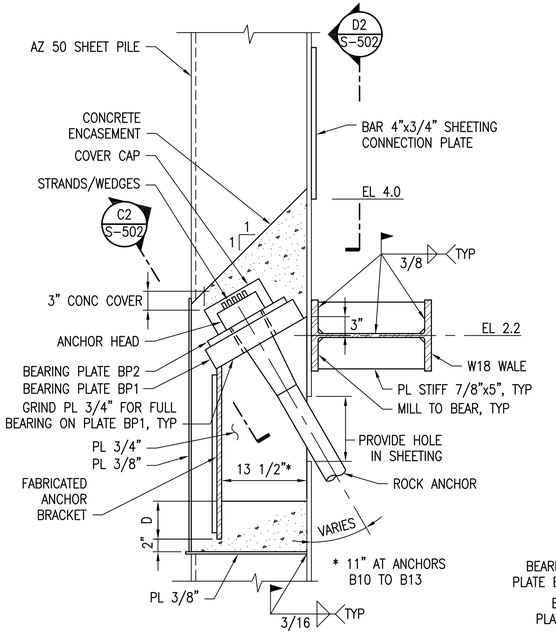

SECTION - WALE
SCALE: 1" = 1'-0" S-502 C1

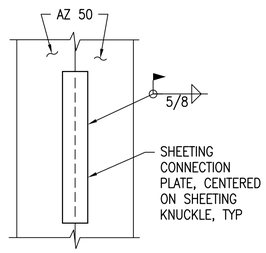

ELEVATION
SCALE: 1" = 1'-0" S-502 D2

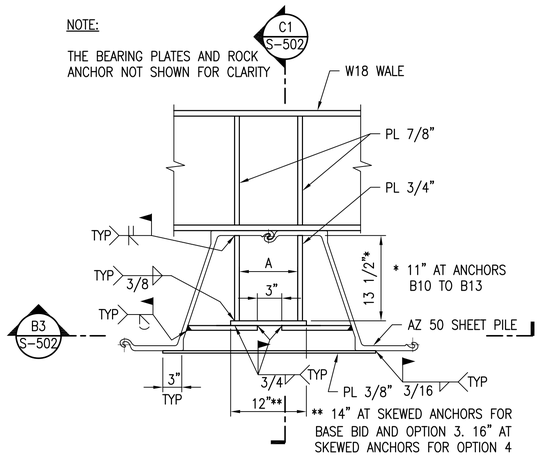

PLAN - SHEET PILE WALE ASSEMBLY
SCALE: 1" = 1'-0" S-502 C3

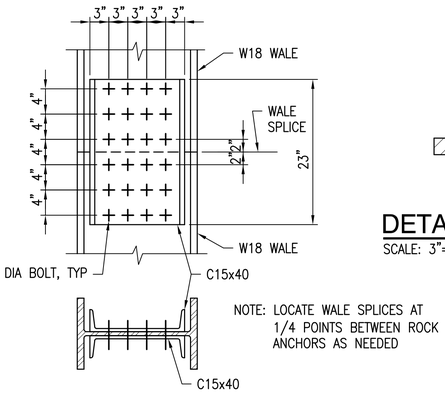

DETAIL - WALE SPLICE
SCALE: 1" = 1'-0" S-502 C4

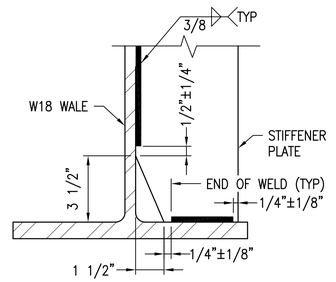

DETAIL - STIFFENER PLATE
SCALE: 3"=1'-0" S-502 D5

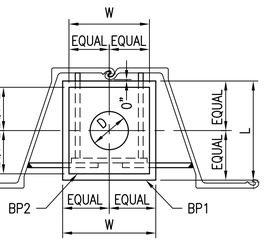

PLAN - BEARING PLATES
SCALE: 1" = 1'-0" S-502 B1

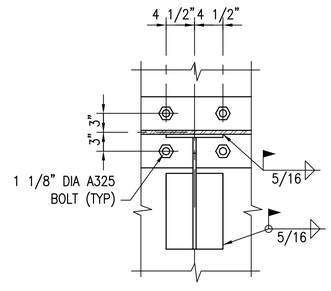

SECTION
SCALE: 1" = 1'-0" S-502 B2

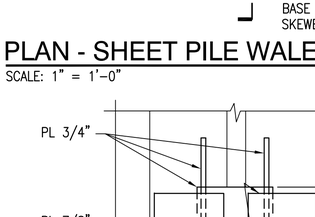

SECTION
SCALE: 1" = 1'-0" S-502 C2

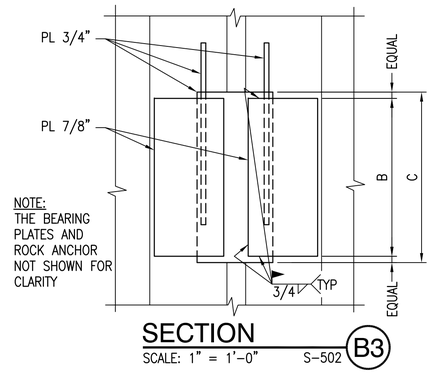

SECTION
SCALE: 1" = 1'-0" S-502 B3

		BASE BID AND OPTION 3	OPTION 4
	WALE SIZE	W18x119	W18x143
ANCHOR BRACKET PLATES	A	8 1/4"	9 1/4"
	B	2'-0"	2'-6"
	C	2'-2"	2'-8"
	D	8"	9"
BEARING PLATE BP1 AT 90° ANCHORS	W	11"	1'-0"
	L	1'-4"	1'-4"
	T	3 1/2"	4"
	D	7 1/2" MAX*	9" MAX*
BEARING PLATE BP2 AT 90° ANCHORS	W	N/A	11"
	L	N/A	1'-3"
	T	N/A	1"
	D	N/A	9" MAX*
BEARING PLATE BP1 AT SKEWED ANCHORS	W	11"	1'-0"
	L	1'-4"	1'-4"
	T	4"	4"
	D	7 1/2" MAX	9" MAX
BEARING PLATE BP2 AT SKEWED ANCHORS	W	N/A	1'-0"
	L	N/A	1'-4"
	T	N/A	3"
	D	N/A	9" MAX
SHEETING CONNECTION PLATE	W	4"	4"
	L	2'-0"	2'-5"
	T	3/4"	3/4"

* HOLE DIAMETER AS REQUIRED PER STRAND MANUFACTURER UP TO MAXIMUM DIAMETER SPECIFIED.

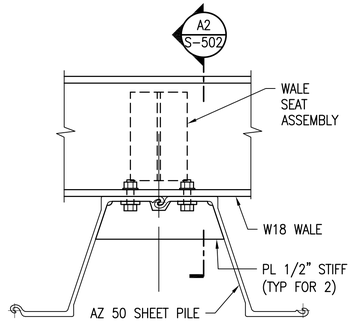

PLAN - WALE SEAT
SCALE: 1" = 1'-0" S-502 A1

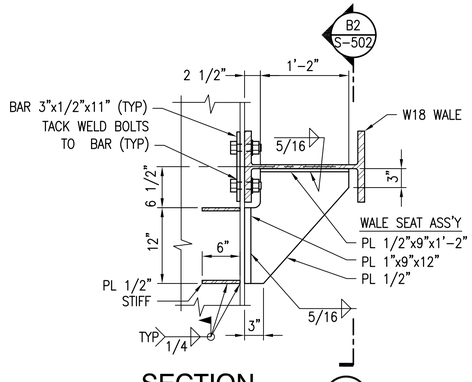

SECTION
SCALE: 1" = 1'-0" S-502 A2

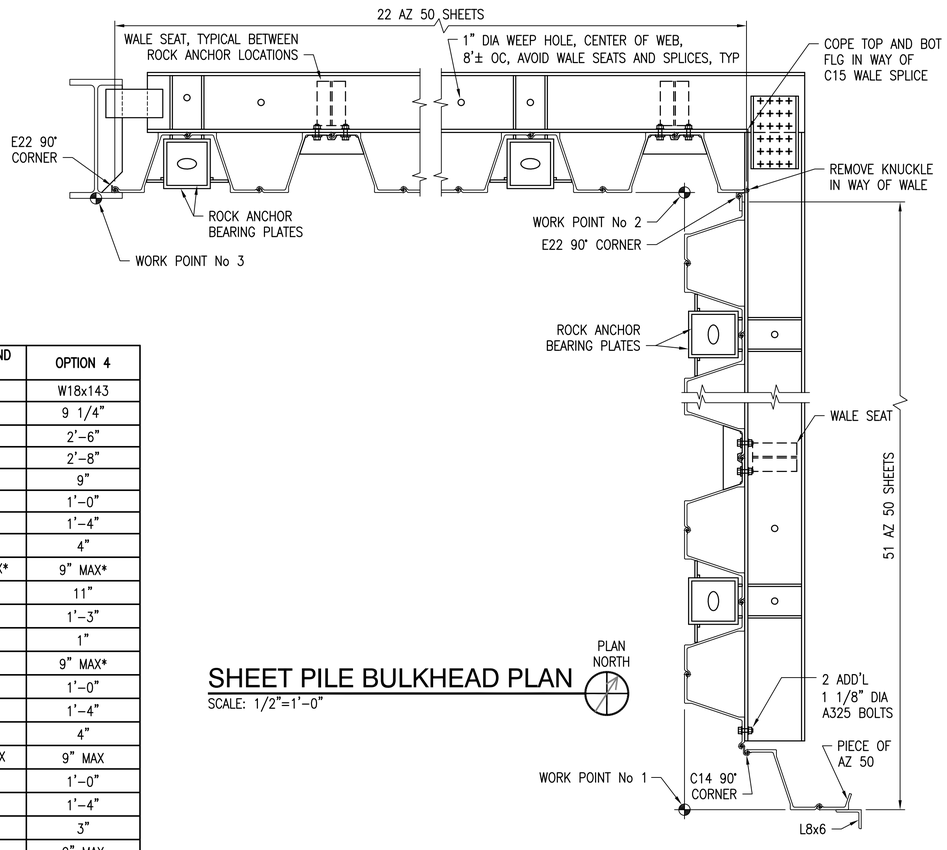

SHEET PILE BULKHEAD PLAN
SCALE: 1/2"=1'-0"

PLAN NORTH

GRAPHIC SCALE
1"=1'-0"
1' 6" 0 1' 3'
9" 3"
CHECK GRAPHIC SCALE BEFORE USING

APPR			
DATE			
DESCRIPTION			
SYM			

NAVFAC

DONALD W. HARVIE CIVIL No. 31022 REGISTERED PROFESSIONAL ENGINEER
3/7/16
SEAL

MN FST A JOINT VENTURE
A/E INFO

APPROVED
David W. Grunfeld
FOR COMMANDER NAVFAC

ACTIVITY:
PER DOCUMENT FROM PNSY CODE 980, KITTERY ME

SATISFACTORY TO DATE: 05/09/16

DES: SC | DRW: RWT | CHK: DWH

PM/DM: NATHAN LIBBY

BRANCH MANAGER: NATHAN MAHER

FEAD/PM&E: AMIN BAHROUR

FIRE PROTECTION: N/A

DEPARTMENT OF THE NAVY
NAVAL FACILITIES ENGINEERING COMMAND
PUBLIC WORKS DEPARTMENT - MAINE
PORTSMOUTH NAVAL SHIPYARD

NAVAL FACILITIES ENGINEERING COMMAND ~ MID-ATLANTIC
NAVAL SHIPYARD - PORTSMOUTH, NH
KITTERY, MAINE

STRUCTURAL REPAIRS AT BERTHS 11A, 11B AND 11C

BULKHEAD WALE DETAILS - SHEET 2 OF 2

EPROJECT NO.: 1356489

CONSTR. CONTR. NO. N40085-XX-C-XXXX

NAVFAC DRAWING NO. 12716096

SHEET 100 OF 144

S-502 | FP2-16-736

DRAWFORM REVISION: 10 OCTOBER 2014

FILE NAME: S:\179A1\Active\179410203\V\TP-1044 PNSY Lifting Study\TP-1044 PNSY Lifting Study\02 CADD\08 Structural\FP2-16-736.dwg LAYOUT NAME: BULKHEAD WALE DETAILS - SHEET 2 OF 2 PLOTTED: Friday, May 13, 2016 - 2:52pm USER: cgoodridge

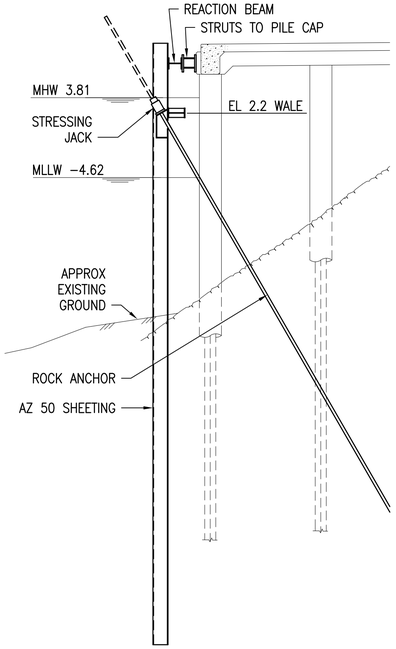

SCHEMATIC - BERTH 11A HEAD END PROOF TEST ANCHOR SUPPORT SYSTEM

SCALE: 1/8" = 1'-0"

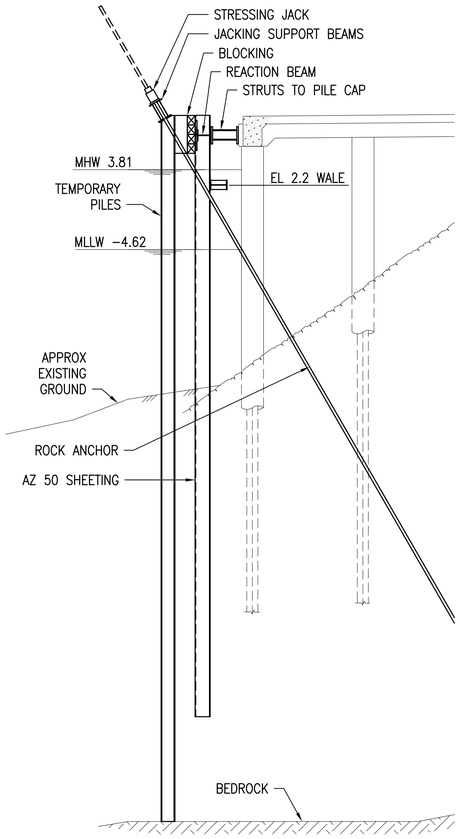

SCHEMATIC - BERTH 11A HEAD END PERFORMANCE TEST ANCHOR SUPPORT SYSTEM

SCALE: 1/8" = 1'-0"

SHEET PILE BULKHEAD AND ROCK ANCHOR INSTALLATION SEQUENCING:

1. INSTALL SHEETING AND WALE
2. INSTALL AND GROUT PERFORMANCE TEST ROCK ANCHOR.
3. INSTALL CONTRACTOR DESIGNED SUPPORT SYSTEM FOR PERFORMANCE TEST ANCHOR.
4. CONDUCT THE PERFORMANCE TEST.
5. UPON ACCEPTANCE OF PERFORMANCE TEST, INSTALL AND GROUT REMAINING ROCK ANCHORS.
6. INSTALL CONTRACTOR DESIGNED BRACING AND PROOF TEST THE REMAINING ANCHORS.
7. REMOVE BRACING AND TIGHTEN ANCHORS TO 0.5 INCH HORIZONTAL DEFLECTION OF SHEETING AT THE WALE (APPROXIMATE ANCHOR LOAD = 40 KIPS) AND POWER SEAT ANCHORS. INSTALL WEDGE RETAINER PLATES.
8. INSTALL PEA STONE AND COMPACTED GRANULAR BACKFILL.
9. CONSTRUCT C-I-P CONCRETE CAP

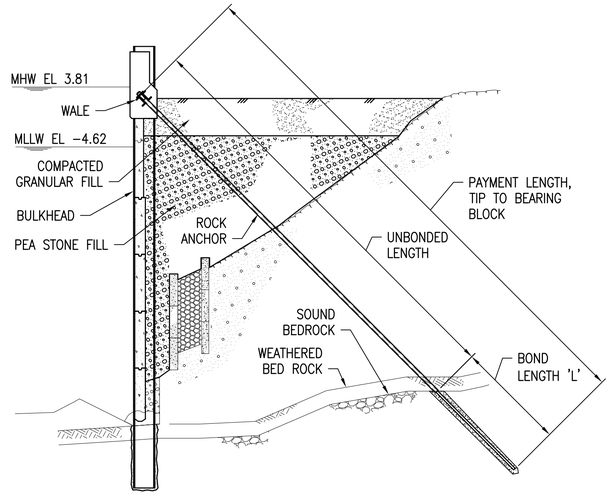

SCHEMATIC ROCK ANCHOR SECTION

SCALE: 3/32" = 1'-0"

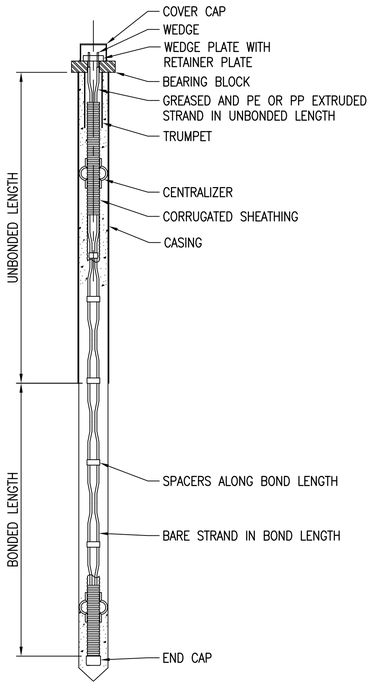

DETAIL - ROCK ANCHOR (A3)

NOT TO SCALE S-503

ROCK ANCHOR NOTES:

1. ROCK ANCHORS SHALL BE A SYSTEM, THAT CONSIST OF AN ANCHORAGE, BEARING PLATE, RETAINER PLATE, POST-TENSIONING STRAND, AND CORROSION PROTECTION FROM A SINGLE MANUFACTURER TO ENSURE COMPATIBILITY ETC, AS SHOWN IN THE DETAILS.
2. ROCK ANCHOR STRAND SHALL BE POST-TENSIONING STRAND, LOW-RELAXATION, 7-WIRE STRAND, 0.6" DIAMETER CONFORMING TO ASTM A-416, WITH A MINIMUM TENSILE STRENGTH OF 270 KSI.
3. ROCK ANCHOR STRAND SHALL NOT BE SPLICED WITHIN A SINGLE TENSION TIE.
4. THE CONTRACTOR SHALL SUBMIT A ROCK ANCHOR INSTALLATION PLAN, INCLUDING ALL EQUIPMENT AND SEQUENCING, DETAILS, GAGE CALIBRATION, JACKING DETAILS, PROPRIETARY SYSTEM, METHOD OF ADJUSTMENTS, ETC., FOR REVIEW PRIOR TO PROCURING TENSION TIES.
5. THE CONTRACTOR SHALL SUBMIT QUALIFICATIONS OF POST-TENSIONING PERSONNEL WHO WILL BE PERFORMING THE WORK.
6. THE CONTRACTOR SHALL SUBMIT CALCULATIONS OF THEORETICAL STRAND ELONGATION, AND SHALL MONITOR STRAND ELONGATION AND JACK GAGE PRESSURE DURING STRESSING. IF THE ACTUAL STRAND ELONGATION DEVIATES MORE THAN 10% FROM THE THEORETICAL ELONGATION, THE CONTRACTOR SHALL DETERMINE THE CAUSE AND MAKE ADJUSTMENTS.
7. ADDITIONAL STRAND LENGTH SHALL BE PROVIDED AT TENSION TIES USED FOR TESTING.
8. AFTER STRESSING AND TESTING, THE UNBONDED LENGTH SHALL BE GROUTED SOLID.

GRAPHIC SCALE

1/8"=1'-0" 4' 0 4' 8' 12' 16'

CHECK GRAPHIC SCALE BEFORE USING

APPR	DATE	DESCRIPTION	STM

NAVFAC

DONALD W. HARVIE CIVIL No. 31022 REGISTERED PROFESSIONAL ENGINEER
3/7/16
SEAL

MN FST A JOINT VENTURE
A/E INFO

APPROVED
David W. Grunfeld
FOR COMMANDER NAVFAC

ACTIVITY:
PER DOCUMENT FROM PNSY
CODE 980, KITTERY ME

SATISFACTORY TO DATE: 05/09/14

DES: MN DRW: AMS CHK: MN
PM/DM: NATHAN LIBBY
BRANCH MANAGER: NATHAN MAHER
FEAD/PM&E: AMIN BAHROUR
FIRE PROTECTION: N/A

DEPARTMENT OF THE NAVY
NAVAL FACILITIES ENGINEERING COMMAND
PUBLIC WORKS DEPARTMENT - MAINE
PORTSMOUTH NAVAL SHIPYARD

NAVAL FACILITIES ENGINEERING COMMAND ~ MID-ATLANTIC
NAVAL SHIPYARD ~ PORTSMOUTH, NH
KITTERY, MAINE

STRUCTURAL REPAIRS AT BERTHS 11A, 11B AND 11C

ROCK ANCHOR DETAILS

EPROJECT NO.: 1356489
CONSTR. CONTR. NO. N40085-XX-C-XXXX
NAVFAC DRAWING NO. 12716097
SHEET 101 OF 144

S-503 | FP2-16-737

DRAWFORM REVISION: 10 OCTOBER 2014

FILE NAME: S:\1794\Active\179410203\1\TP-104A PNSY Lifting Study\TP-104A PNSY Lifting Study\02 CAD\08 Structural\FP2-16-737.dwg LAYOUT NAME: ROCK ANCHOR DETAILS PLOTTED: Friday, May 13, 2016 - 2:53pm USER: cgoodridge

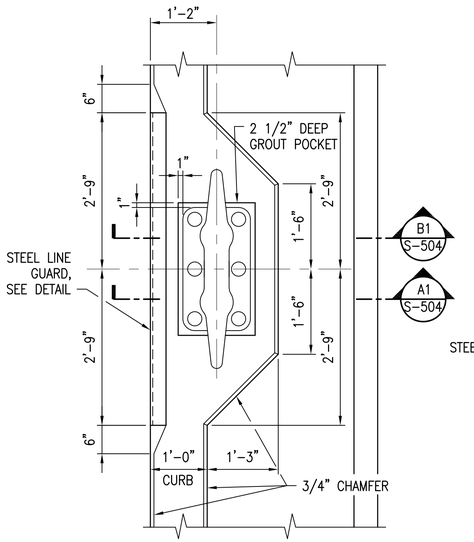

PLAN - CLEAT PEDESTAL

SCALE: 3/4"=1'-0"

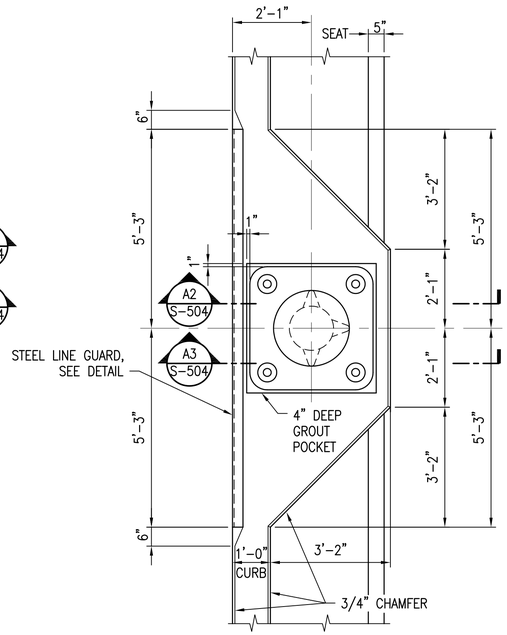

PLAN - BOLLARD PEDESTAL

SCALE: 1/2"=1'-0"

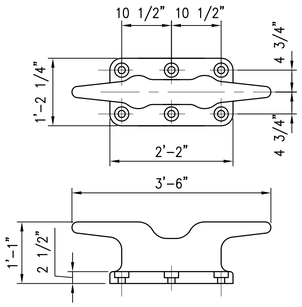

DETAIL - 42" CAST STEEL CLEAT

SCALE: 3/4"=1'-0"

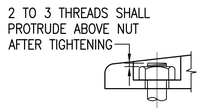

DETAIL - NUT

SCALE: 1 1/2"=1'-0"

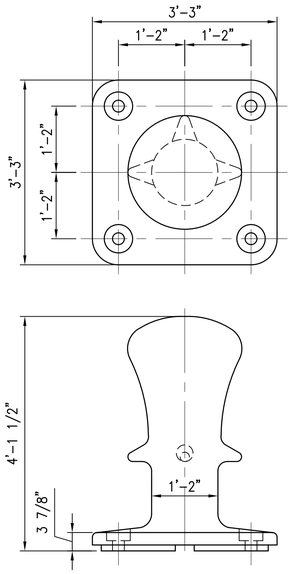

DETAIL - CAST STEEL BOLLARD

SCALE: 3/4"=1'-0"

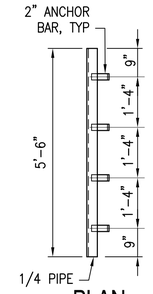

PLAN CLEAT LINE GUARD

SCALE: 1/2"=1'-0"

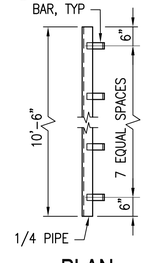

PLAN BOLLARD LINE GUARD

SCALE: 1/2"=1'-0"

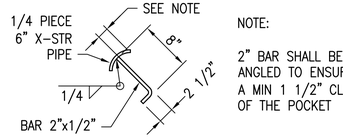

NOTE:

2" BAR SHALL BE ANGLED TO ENSURE A MIN 1 1/2" CLEAR OF THE POCKET

DETAIL - LINE GUARD

SCALE: 1"=1'-0"

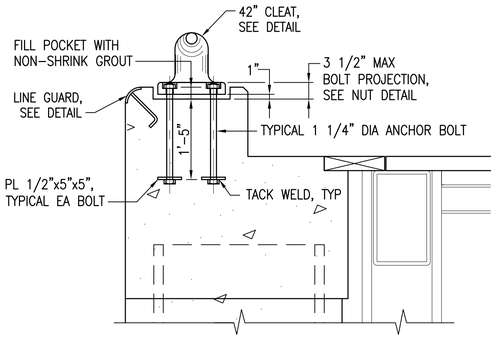

SECTION - BERTH 11B (B1)

SCALE: 3/4"=1'-0" S-504

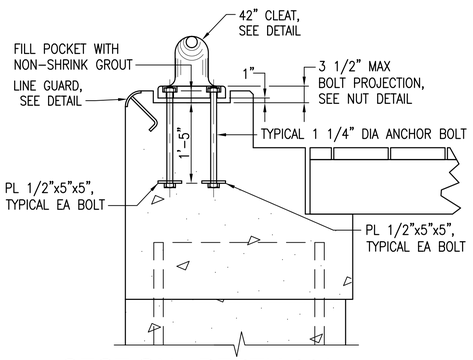

SECTION - BERTH 11A (A1)

SCALE: 3/4"=1'-0" S-504

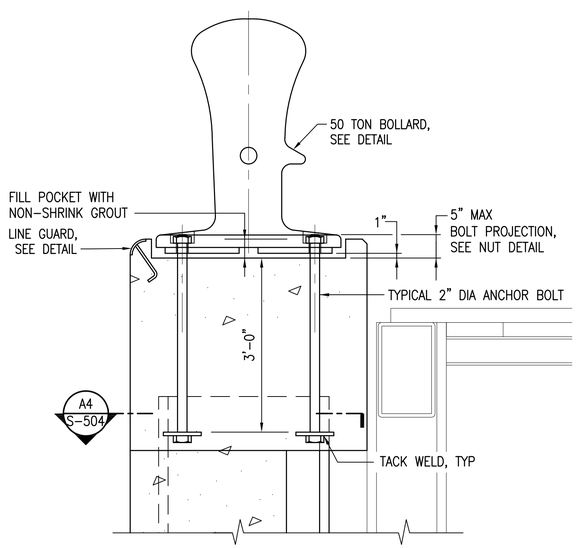

SECTION - BERTH 11B (A2)

SCALE: 3/4"=1'-0" S-504

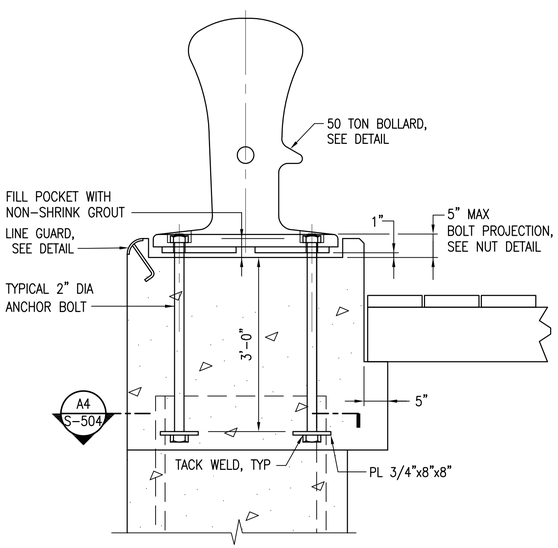

SECTION - BERTH 11A (A3)

SCALE: 3/4"=1'-0" S-504

NOTE:

BOLLARD ANCHOR BOLTS SHALL BE ASTM F1554, GRADE 55.

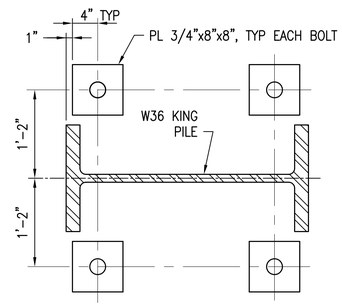

SECTION - BOLLARD ANCHORAGE (A4)

SCALE: 1" = 1'-0" S-504

1/2"=1'-0" 4' 3' 2' 1' 0 4'

GRAPHIC SCALE

3/4"=1'-0" 1' 0' 1' 2' 4'

CHECK GRAPHIC SCALE BEFORE USING

APPR	DATE	DESCRIPTION	STM

NAVFAC

DONALD W. HARVIE CIVIL No. 31022 REGISTERED PROFESSIONAL ENGINEER 3/7/16 SEAL

MNFST A JOINT VENTURE

A/E INFO

APPROVED for NAVFAC Commander: David W. Grunfeld FOR COMMANDER NAVFAC

ACTIVITY: PER DOCUMENT FROM PNSY CODE 980, KITTERY ME

SATISFACTORY TO DATE: 05/09/16

DES: MAB | DRW: RWT | CHK: DWH

PM/DM: NATHAN LIBBY

BRANCH MANAGER: NATHAN MAHER

FEAD/PM&E: AMIN BAHROUR

FIRE PROTECTION: N/A

DEPARTMENT OF THE NAVY
NAVAL FACILITIES ENGINEERING COMMAND
PUBLIC WORKS DEPARTMENT - MAINE
PORTSMOUTH NAVAL SHIPYARD

NAVAL FACILITIES ENGINEERING COMMAND ~ MID-ATLANTIC
NAVAL SHIPYARD ~ PORTSMOUTH, NH
KITTERY, MAINE

STRUCTURAL REPAIRS AT BERTHS 11A, 11B AND 11C

CLEAT & BOLLARD DETAILS ~ SHEET 1 OF 3

EPROJECT NO.: 1356489

CONSTR. CONTR. NO. N40085-XX-C-XXXX

NAVFAC DRAWING NO. 12716098

SHEET 102 OF 144

S-504 | FP2-16-738

DRAWFORM REVISION: 10 OCTOBER 2014

FILE NAME: S:\1794\Active\1794102203\VP-104A PNSY Lifting Study\VP-104A PNSY Lifting Study\02 CADD\08 Structural\FP2-16-738.dwg LAYOUT NAME: CLEAT & BOLLARD DETAILS - SHEET 1 OF 3 PLOTTED: Friday, May 13, 2016 - 2:53pm USER: cgoodridge

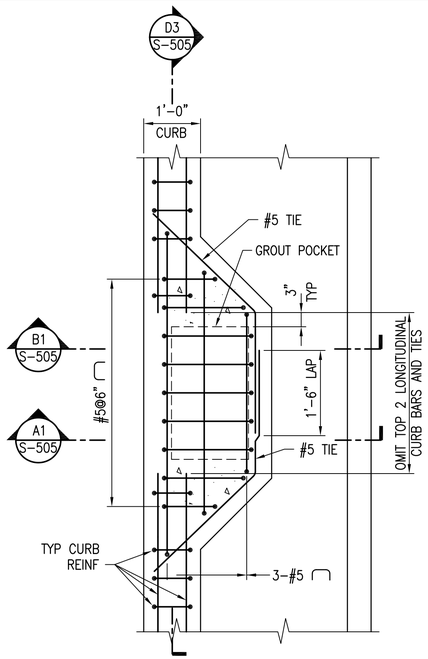

PLAN - CLEAT PEDESTAL

SCALE: 3/4"=1'-0"

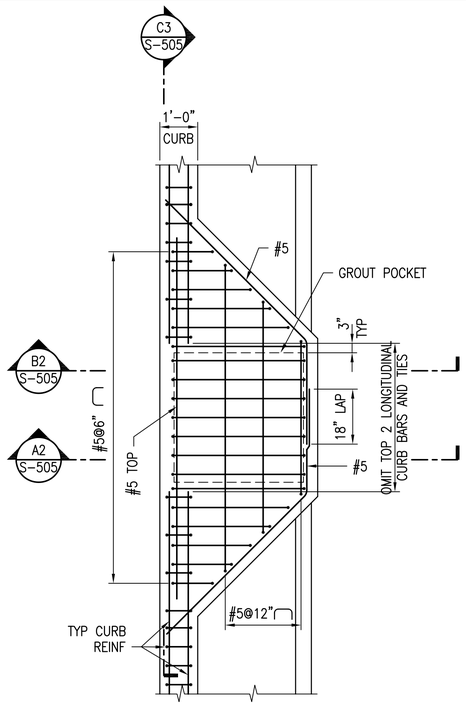

PLAN - BOLLARD PEDESTAL

SCALE: 1/2"=1'-0"

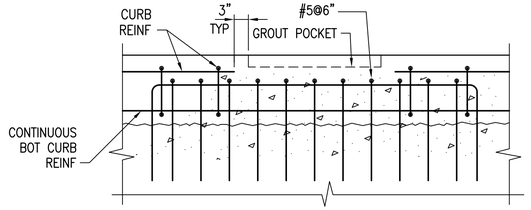

SECTION - CLEAT PEDESTAL

SCALE: 3/4"=1'-0" S-505 D3

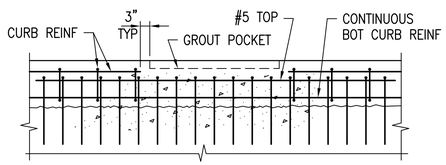

SECTION - BOLLARD PEDESTAL

SCALE: 1/2" = 1'-0" S-505 C3

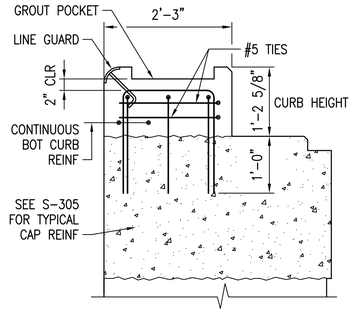

SECTION - BERTH 11B & 11C

SCALE: 3/4"=1'-0" S-505 B1

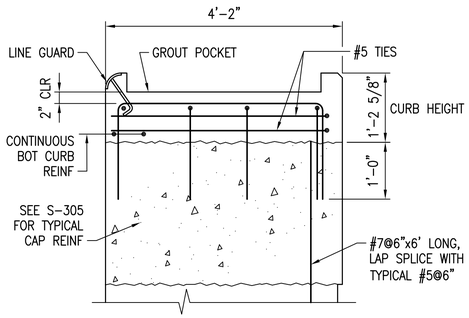

SECTION - BERTH 11B & 11C

SCALE: 3/4"=1'-0" S-505 B2

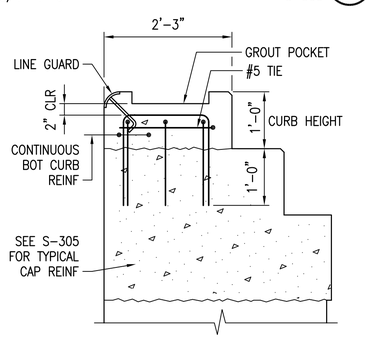

SECTION - BERTH 11A

SCALE: 3/4"=1'-0" S-505 A1

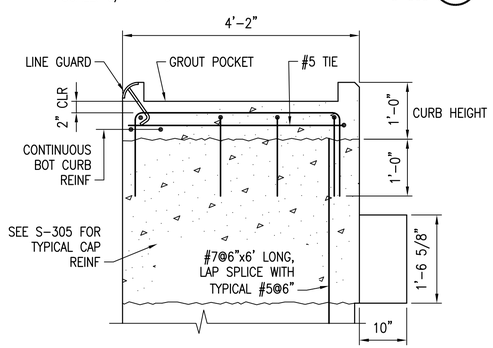

SECTION - BERTH 11A

SCALE: 3/4"=1'-0" S-505 A2

GRAPHIC SCALE

1/2"=1'-0" 4' 3' 2' 1' 0 4'

3/4"=1'-0" 1' 0' 1' 2' 4'

CHECK GRAPHIC SCALE BEFORE USING

APPR	DATE	DESCRIPTION	MJS

NAVFAC

DONALD W. HARVIE CIVIL No. 21022 REGISTERED PROFESSIONAL ENGINEER
3/7/16
SEAL

MNFST A JOINT VENTURE
A/E INFO

APPROVED
FOR COMMANDER NAVFAC

ACTIVITY:
PER DOCUMENT FROM PNSY CODE 980, KITTERY ME

SATISFACTORY TO DATE: 05/09/16

DES	MAB	DRW	RWT	CHK	DWH

PM/DM: NATHAN LIBBY
BRANCH MANAGER: NATHAN MAHER
FEAD/PM&E: AMN BAHROUR
FIRE PROTECTION: N/A

DEPARTMENT OF THE NAVY
NAVAL FACILITIES ENGINEERING COMMAND
PUBLIC WORKS DEPARTMENT - MAINE
PORTSMOUTH NAVAL SHIPYARD

NAVAL FACILITIES ENGINEERING COMMAND ~ MID-ATLANTIC
NAVAL SHIPYARD - PORTSMOUTH, NH
KITTERY, MAINE

STRUCTURAL REPAIRS AT BERTHS 11A, 11B AND 11C

CLEAT & BOLLARD DETAILS - SHEET 2 OF 3

EPROJECT NO.: 1356489
CONSTR. CONTR NO.: N40085-XX-C-XXXX
NAVFAC DRAWING NO.: 12716099
SHEET 103 OF 144
S-505 FP2-16-739

DRAWFORM REVISION: 10 OCTOBER 2014

FILE NAME: S:\1794\Active\179410203\VTP-104A PNSY Lifting Study\TP-104A PNSY Lifting Study\02 CAD\08 Structure\FP2-16-739.dwg LAYOUT NAME: CLEAT & BOLLARD DETAILS - SHEET 2 OF 3 PLOTTED: Friday, May 13, 2016 - 2:54pm USER: cgoodridge

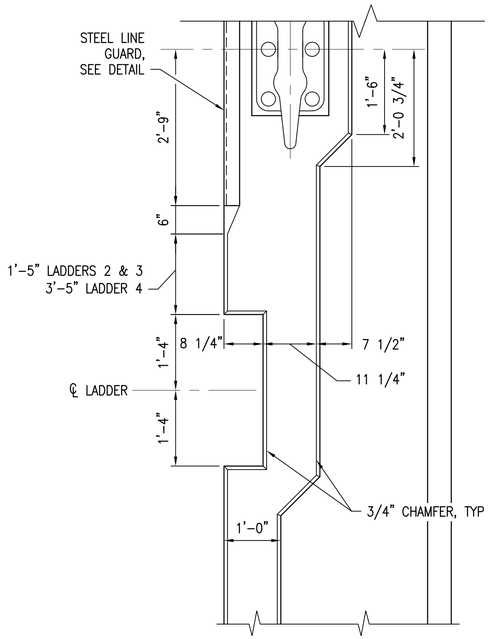

PLAN - CLEAT PEDESTAL

SCALE: 3/4"=1'-0"

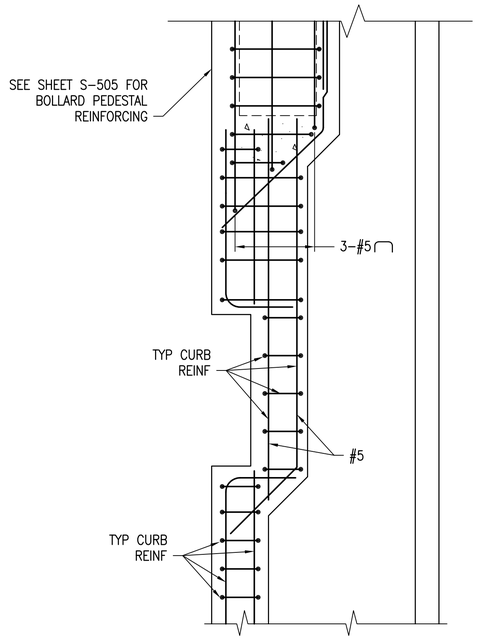

PLAN - CURB REINFORCING @ LADDER/CLEAT PEDESTAL

SCALE: 3/4"=1'-0"

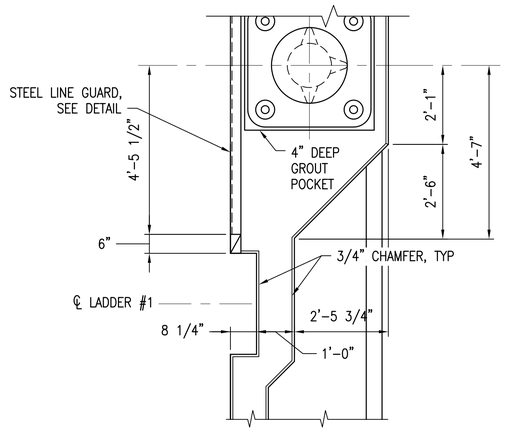

PLAN - CURB @ LADDER No 1

SCALE: 1/2"=1'-0"

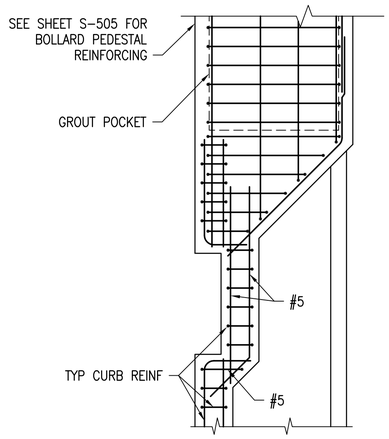

PLAN - CURB REINFORCING @ LADDER No 1

SCALE: 1/2"=1'-0"

NOTES:

1. LAYOUT FOR LADDERS 2 AND 3 SHOWN, CENTERLINE OF CLEAT TO CENTERLINE OF LADDER IS 6'.
2. LAYOUT AT LADDER 4 IS SIMILAR BUT MIRRORED.
3. CENTERLINE OF CLEAT TO CENTERLINE OF LADDER No 4 IS 8'.

3/4"=1'-0" 1' 0' 1' 2' 4'

GRAPHIC SCALE

1/2"=1'-0" 4' 3' 2' 1' 0 4'

CHECK GRAPHIC SCALE BEFORE USING

SYM	DESCRIPTION	DATE	APPR

NAVFAC

DONALD W. HARVIE CIVIL No. 31070 REGISTERED PROFESSIONAL ENGINEER

3/7/16

SEAL

MN FST A JOINT VENTURE

A/E INFO

APPROVED David W. Greenfield

FOR COMMANDER NAVFAC

ACTIVITY: PER DOCUMENT FROM PNSY CODE 980, KITTERY ME

SATISFACTORY TO DATE: 05/09/16

DES DWH DRW RWT CHK DWH

PM/DM: NATHAN LIBBY

BRANCH MANAGER: NATHAN MAHER

FEAD/PM&E: AMIN BAHROUR

FIRE PROTECTION: N/A

DEPARTMENT OF THE NAVY
NAVAL FACILITIES ENGINEERING COMMAND
NAVAL FACILITIES ENGINEERING COMMAND ~ MID-ATLANTIC
PUBLIC WORKS DEPARTMENT - MAINE
NAVAL SHIPYARD - PORTSMOUTH, NH

PORTSMOUTH NAVAL SHIPYARD

KITTERY, MAINE

STRUCTURAL REPAIRS AT BERTHS 11A, 11B AND 11C

CLEAT & BOLLARD DETAILS - SHEET 3 OF 3

EPROJECT NO.: 1356489

CONSTR. CONTR. NO. N40085-XX-C-XXXX

NAVFAC DRAWING NO. 12716100

SHEET 104 OF 144

S-506 FP2-16-740

DRAWFORM REVISION: 10 OCTOBER 2014

FILE NAME: S:\1794\Active\179410203\(\TP-104A PNSY Lifting Study\TP-104A PNSY Lifting Study\02 CADD\08 Structural\FP2-16-740.dwg LAYOUT NAME: CLEAT & BOLLARD DETAILS - SHEET 3 OF 3 PLOTTED: Friday, May 13, 2016 - 2:54pm USER: cgoodridge

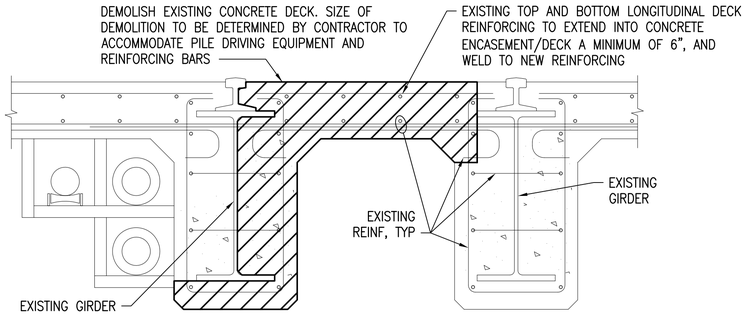

DEMOLITION SECTION

SCALE: 3/4"=1'-0" S-507 D1

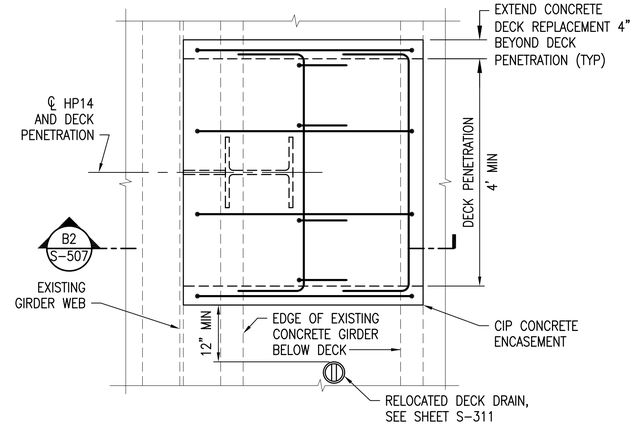

DECK PLAN

SCALE: 3/4"=1'-0" S-507 C2

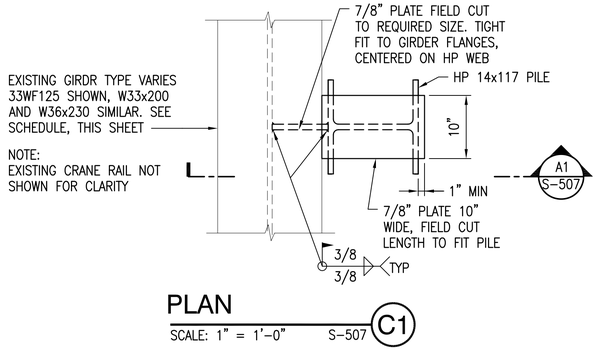

PLAN

SCALE: 1" = 1'-0" S-507 C1

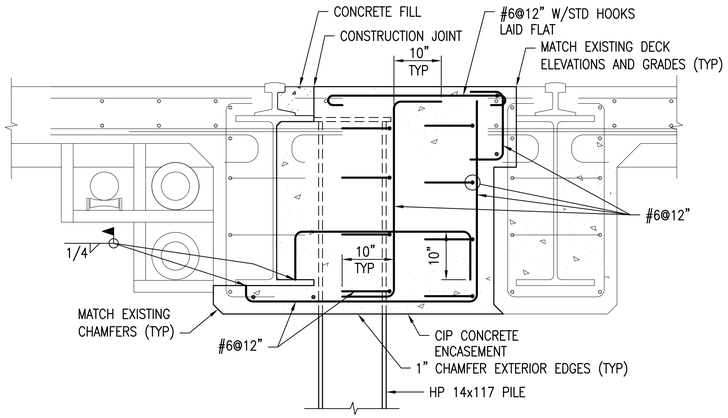

SECTION

SCALE: 3/4"=1'-0" S-507 B2

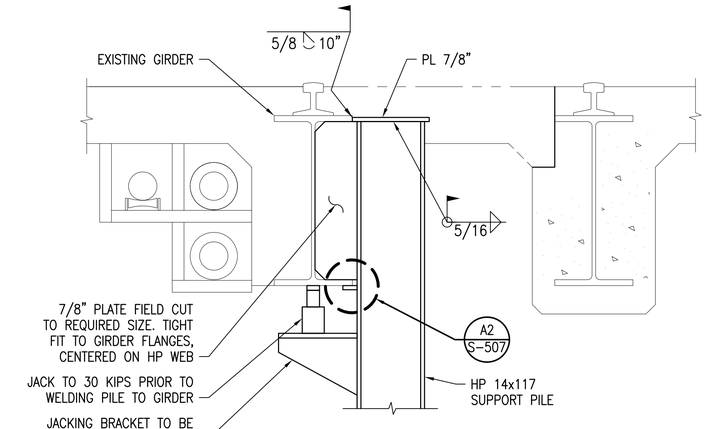

SECTION

SCALE: 3/4"=1'-0" S-507 A1

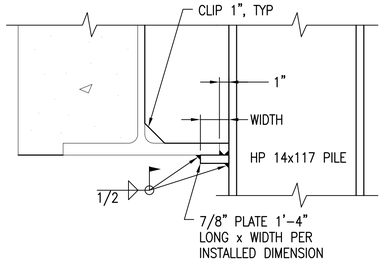

DETAIL

SCALE: 1 1/2"=1'-0" S-507 A2

SCHEDULE OF EXISTING GIRDERS AT SUPPORT PILE CONNECTIONS

PILE	EXISTING GIRDER TYPE
Q.5C	W33x200
Q.5B	33WF200
V.5C TO R.5C	W33x130
V.5B TO R.5B	33WF125
1.5C TO 28.5C	W36x230
30.5C TO 39.5C	W36x230

GRAPHIC SCALE

3/4"=1'-0" 1' 0' 1' 2' 4'

CHECK GRAPHIC SCALE BEFORE USING

APPR	DATE	DESCRIPTION	MJS

NAVFAC

COMMONWEALTH OF MASSACHUSETTS
DAVID J. MELO
CIVIL
No. 48692
REGISTERED PROFESSIONAL ENGINEER
3/7/16
SEAL

MN FST
A JOINT VENTURE
A/E INFO

APPROVED
Signature
David W. Grunfeld
FOR COMMANDER NAVFAC

ACTIVITY:
PER DOCUMENT FROM PNSY
CODE 980, KITTERY ME

SATISFACTORY TO DATE: 05/09/16

DES	DWH	DRW	RWT	CHK	DWH

PM/DM: NATHAN LIBBY
BRANCH MANAGER: NATHAN MAHER
FEAD/PM&E: AMIN BAHROUR
FIRE PROTECTION: N/A

DEPARTMENT OF THE NAVY
NAVAL FACILITIES ENGINEERING COMMAND
PUBLIC WORKS DEPARTMENT - MAINE
PORTSMOUTH NAVAL SHIPYARD

NAVAL FACILITIES ENGINEERING COMMAND ~ MID-ATLANTIC
NAVAL SHIPYARD ~ PORTSMOUTH, NH
KITTERY, MAINE

STRUCTURAL REPAIRS
AT BERTHS 11A, 11B AND 11C

SUPPORT PILE CONNECTION DETAILS

EPROJECT NO.: 1356489
CONSTR. CONTR. NO. N40085-XX-C-XXXX
NAVFAC DRAWING NO. 12716101
SHEET 105 OF 144
S-507 FP2-16-741

DRAWFORM REVISION: 10 OCTOBER 2014

FILE NAME: S:\1794\Active\179410203\V\TP-104A PNSY Lifting Study\TP-104A PNSY Lifting Study\V02 CADD\08 Structural\FP2-16-741.dwg LAYOUT NAME: SUPPORT PILE CONNECTION DETAILS PLOTTED: Friday, May 13, 2016 - 2:54pm USER: cgoodridge

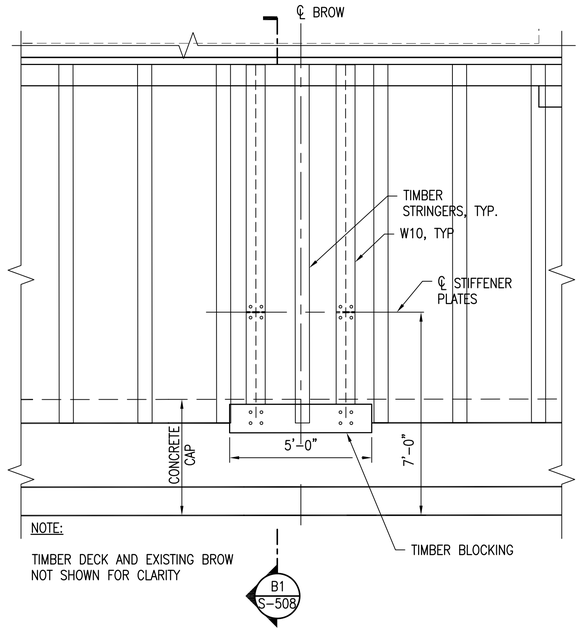

LIVING BARGE BROW FOUNDATION No 1 & 2

SCALE: 3/8" = 1'-0"

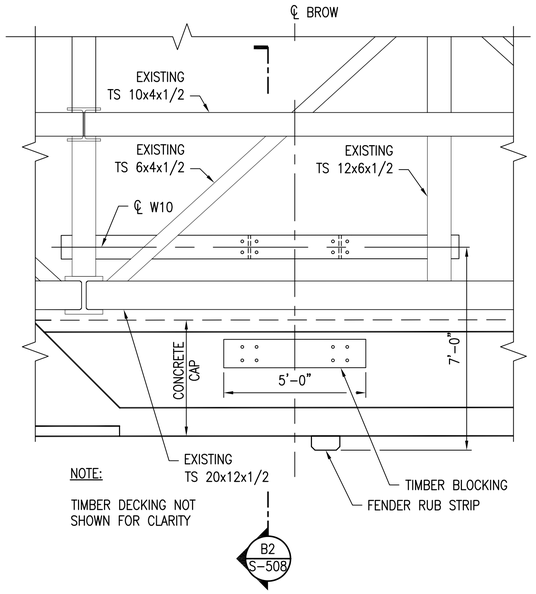

LIVING BARGE BROW FOUNDATION No 3

SCALE: 3/8" = 1'-0"

BROW STATIONING	
LIVING BARGE BROW FOUNDATION	STATIONING
1	11+18.12
2	9+92.61
3	2+84.81

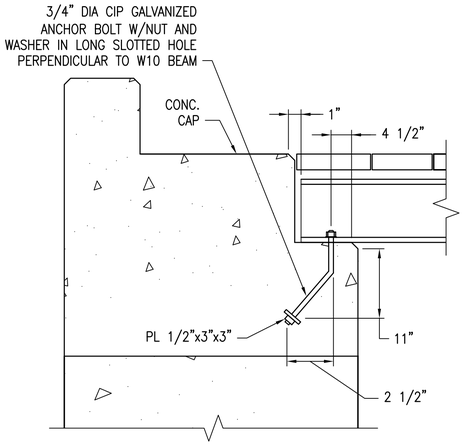

DETAIL - SUPPORT BEAM

SCALE: 1" = 1'-0" — S-508 C4

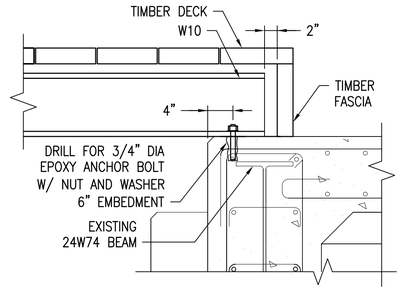

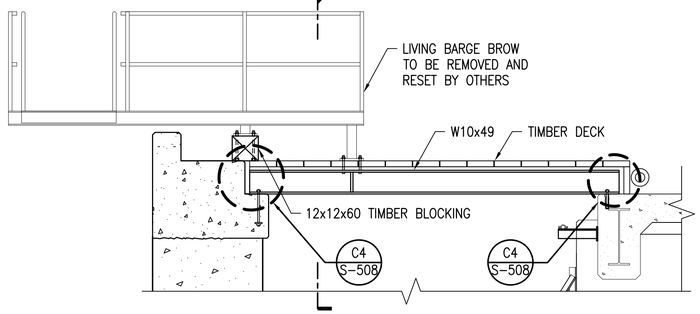

SECTION - LIVING BARGE BROW FOUNDATION No 1 & 2

SCALE: 3/8" = 1'-0" — S-508 B1

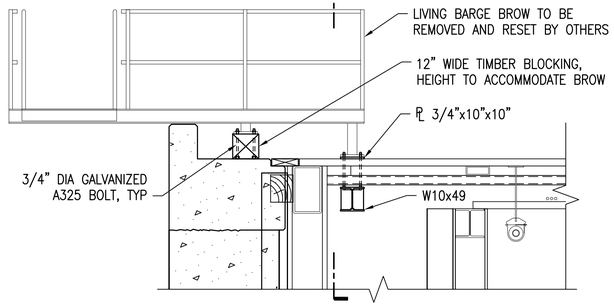

SECTION - LIVING BARGE BROW FOUNDATION No 3

SCALE: 3/8" = 1'-0" — S-508 B2

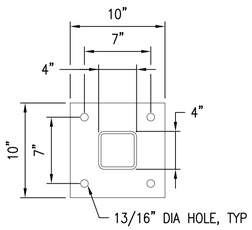

DETAIL - EXISTING BROW BASE PLATE

SCALE: 1 1/2" = 1'-0" — S-508 B4

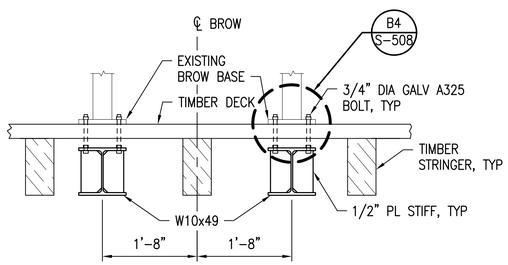

SECTION - BROW FOUNDATION No 1 & 2

SCALE: 3/4" = 1'-0" — S-108, S-109 A1

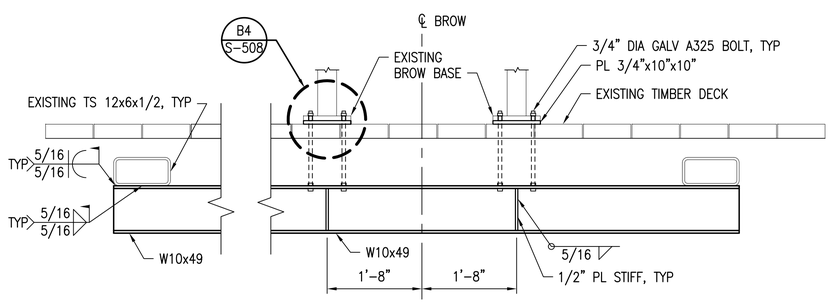

SECTION - BROW FOUNDATION No 3

SCALE: 3/4" = 1'-0" — S-508 A2

NOTES:

1. ALL DIMENSIONS DEPENDENT ON BROW DIMENSIONS SHALL BE VERIFIED PRIOR TO FABRICATION OF ANY FOUNDATION COMPONENTS. BROW LOCATIONS WILL BE MADE AVAILABLE UPON REQUEST TO GOVERNMENT. ALL DIMENSIONS ARE APPROXIMATE.

GRAPHIC SCALE

1"=20' — 20' 0 20' 40'

CHECK GRAPHIC SCALE BEFORE USING

APPR | DATE | DESCRIPTION | MJS | STM

NAVFAC

COMMONWEALTH OF MASSACHUSETTS — DAVID J. MELO — CIVIL — No. 48692 — REGISTERED PROFESSIONAL ENGINEER — 3/7/16 — SEAL

MNFST — A JOINT VENTURE — A/E INFO

APPROVED — David W. Trumfield — FOR COMMANDER NAVFAC

ACTIVITY: PER DOCUMENT FROM PNSY CODE 980, KITTERY ME

SATISFACTORY TO — DATE: 05/09/16

DES	DJM	DRW	RWT	CHK	DWH

PM/DM: NATHAN LIBBY

BRANCH MANAGER: NATHAN MAHER

FEAD/PM&E: AMN BAHROUR

FIRE PROTECTION: N/A

DEPARTMENT OF THE NAVY
NAVAL FACILITIES ENGINEERING COMMAND
PUBLIC WORKS DEPARTMENT - MAINE
PORTSMOUTH NAVAL SHIPYARD

NAVAL FACILITIES ENGINEERING COMMAND – MID-ATLANTIC
NAVAL SHIPYARD - PORTSMOUTH, NH — KITTERY, MAINE

STRUCTURAL REPAIRS AT BERTHS 11A, 11B AND 11C

LIVING BARGE BROW ANCHORAGE DETAILS

EPROJECT NO.: 1356489

CONSTR. CONTR. NO. N40085-XX-C-XXXX

NAVFAC DRAWING NO. 12716102

SHEET 106 OF 144

S-508 | FP2-16-742

DRAWFORM REVISION: 10 OCTOBER 2014

FILE NAME: S:\1794\Active\179410203\VTP-104A PNSY Lifting Study\TP-104A PNSY Lifting Study\02 CAD\08 Structural\FP2-16-742.dwg LAYOUT NAME: LIVING BARGE BROW ANCHORAGE DETAILS PLOTTED: Friday, May 13, 2016 - 2:55pm USER: cgoodridge

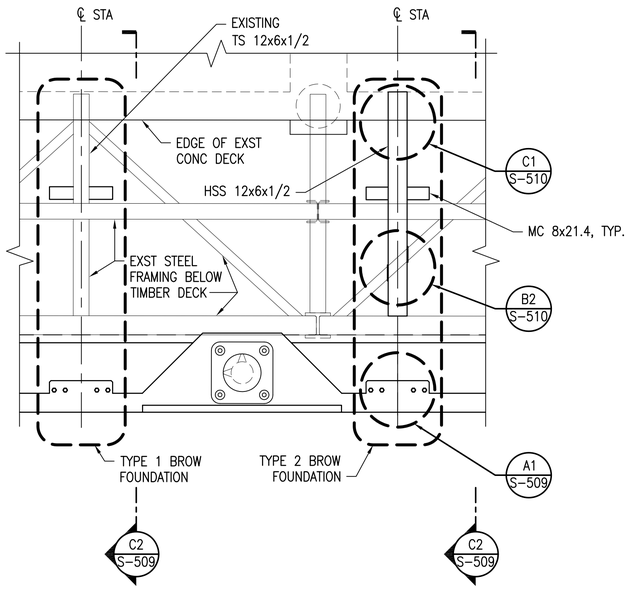

PART PLAN - SERVICE BROW FOUNDATION (C2)

SCALE: 1/4" = 1'-0" — S-109, S-110

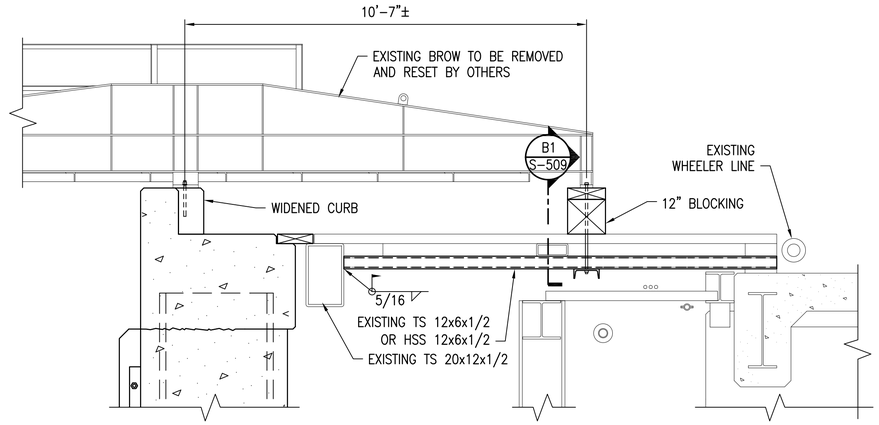

PART PLAN - SERVICE BROW FOUNDATION (C2)

SCALE: 1/2" = 1'-0" — S-509

SERVICE BROW FOUNDATIONS		
BROW NUMBER	STATION	TYPE
1	6+81.59	2
2	6+64.91	1
3	6+14.89	1
4	5+64.89	1
5	2+62.17	2
6	2+57.06	2
7	1+82.06	2

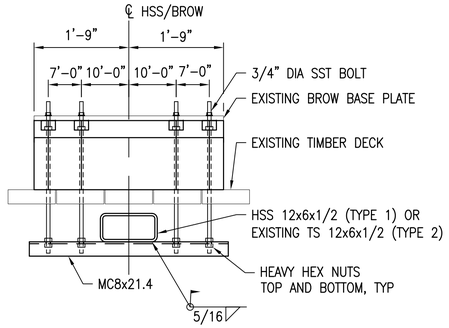

DETAIL - ANCHOR (B1)

SCALE: 3/4" = 1'-0" — S-509

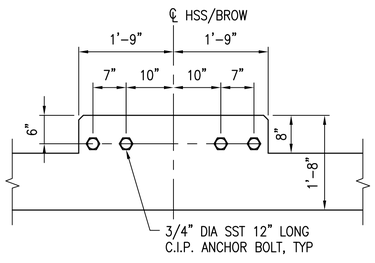

DETAIL - ANCHOR AT CURB (A1)

SCALE: 3/4" = 1'-0" — S-509

NOTES:

1. ALL DIMENSIONS DEPENDENT ON BROW DIMENSIONS SHALL BE VERIFIED PRIOR TO FABRICATION OF ANY FOUNDATION COMPONENTS. BROW LOCATIONS WILL BE MADE AVAILABLE UPON REQUEST TO THE GOVERNMENT. ALL DIMENSIONS ARE APPROXIMATE.

3/4"=1'-0" — 1' 0' 1' 2' 4'

1/2"=1'-0" — 4' 3' 2' 1' 0 4'

GRAPHIC SCALE

1/4"=1'-0" — 4' 0 4' 8'

CHECK GRAPHIC SCALE BEFORE USING

APPR | DATE | DESCRIPTION | STA

NAVFAC

COMMONWEALTH OF MASSACHUSETTS
DAVID J. MELO
CIVIL
No. 48692
REGISTERED PROFESSIONAL ENGINEER
3/7/16
SEAL

MNFST
A JOINT VENTURE
A/E INFO

APPROVED
David W. Thurfield
FOR COMMANDER NAVFAC

ACTIVITY:
PER DOCUMENT FROM PNSY
CODE 980, KITTERY ME

SATISFACTORY TO — DATE: 05/09/14

DES: DJM | DRW: RWT | CHK: DWH

PM/DM: NATHAN LIBBY

BRANCH MANAGER: NATHAN MAHER

FEAD/PM&E: AMIN BAHROUR

FIRE PROTECTION: N/A

DEPARTMENT OF THE NAVY
NAVAL FACILITIES ENGINEERING COMMAND
PUBLIC WORKS DEPARTMENT - MAINE
PORTSMOUTH NAVAL SHIPYARD

NAVAL FACILITIES ENGINEERING COMMAND ~ MID-ATLANTIC
NAVAL SHIPYARD ~ PORTSMOUTH, NH
KITTERY, MAINE

STRUCTURAL REPAIRS
AT BERTHS 11A, 11B AND 11C

SERVICE BROW ANCHORAGE DETAILS

EPROJECT NO.: 1356489

CONSTR. CONTR. NO.
N40085-XX-C-XXXX

NAVFAC DRAWING NO.
12716103

SHEET 107 OF 144

S-509 | FP2-16-743

DRAWFORM REVISION: 10 OCTOBER 2014

FILE NAME: S:\1794\Archive\1794102003\V\TP-104A PNSY Lifting Study\TP-104A PNSY Lifting Study\02 CAD\08 Structural\FP2-16-743.dwg LAYOUT NAME: SERVICE BROW ANCHORAGE DETAILS PLOTTED: Friday, May 13, 2016 - 2:55pm USER: cgoodridge

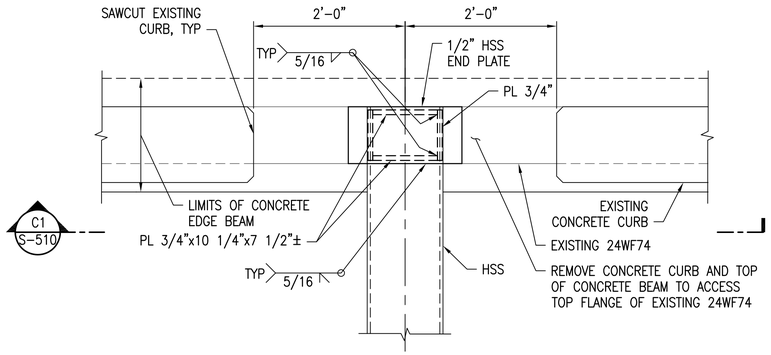

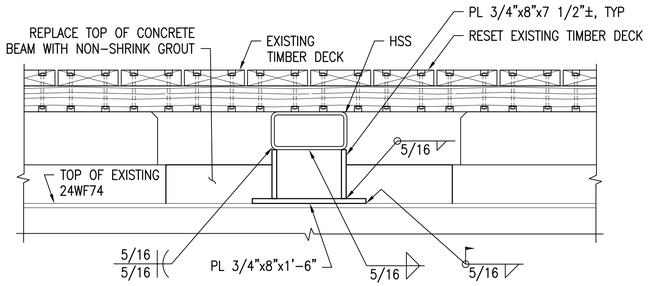

DETAIL - FRAMING FOUNDATION CONNECTION

SCALE: 1" = 1'-0" S-510 C1

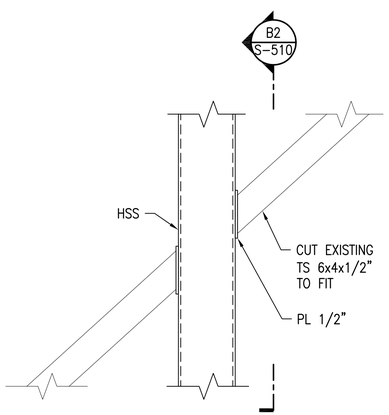

SECTION - SPLICE

SCALE: 3/4" = 1'-0" S-509 B1

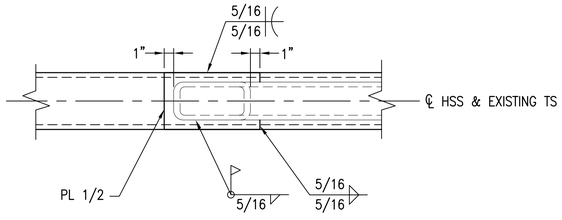

SECTION - SPLICE

SCALE: 1 1/2" = 1'-0" S-510 B2

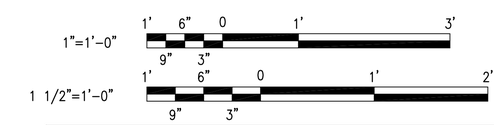

GRAPHIC SCALE

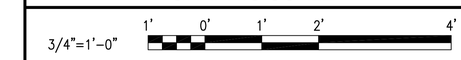

CHECK GRAPHIC SCALE BEFORE USING

SYM	DESCRIPTION	DATE	APPR

NAVFAC

COMMONWEALTH OF MASSACHUSETTS
DAVID J. MELO
CIVIL
No. 48692
REGISTERED PROFESSIONAL ENGINEER
3/7/16
SEAL

MN FST
A JOINT VENTURE
A/E INFO

APPROVED
David W. Greenfield
FOR COMMANDER NAVFAC

ACTIVITY:
PER DOCUMENT FROM PNSY CODE 980, KITTERY ME

SATISFACTORY TO DATE: 05/09/16

DES DJM | DRW RWT | CHK DJM

PM/DM: NATHAN LIBBY

BRANCH MANAGER: NATHAN MAHER

FEAD/PM&E: AMIN BAHROUR

FIRE PROTECTION: N/A

DEPARTMENT OF THE NAVY
NAVAL FACILITIES ENGINEERING COMMAND
PUBLIC WORKS DEPARTMENT - MAINE

NAVAL FACILITIES ENGINEERING COMMAND ~ MID-ATLANTIC
NAVAL SHIPYARD - PORTSMOUTH, NH

PORTSMOUTH NAVAL SHIPYARD

KITTERY, MAINE

STRUCTURAL REPAIRS
AT BERTHS 11A, 11B AND 11C

BROW ANCHORAGE DETAILS

EPROJECT NO.: 1356489

CONSTR. CONTR. NO.
N40085-XX-C-XXXX

NAVFAC DRAWING NO.
12716104

SHEET 108 OF 144

S-510 | FP2-16-744

DRAWFORM REVISION: 10 OCTOBER 2014

FILE NAME: S:\1794\Active\179410203\(\TP-104A PNSY Lifting Study\TP-104A PNSY Lifting Study\02 CADD\08 Structural\FP2-16-744.dwg LAYOUT NAME: BROW ANCHORAGE DETAILS PLOTTED: Friday, May 13, 2016 - 2:56pm USER: cgoodridge

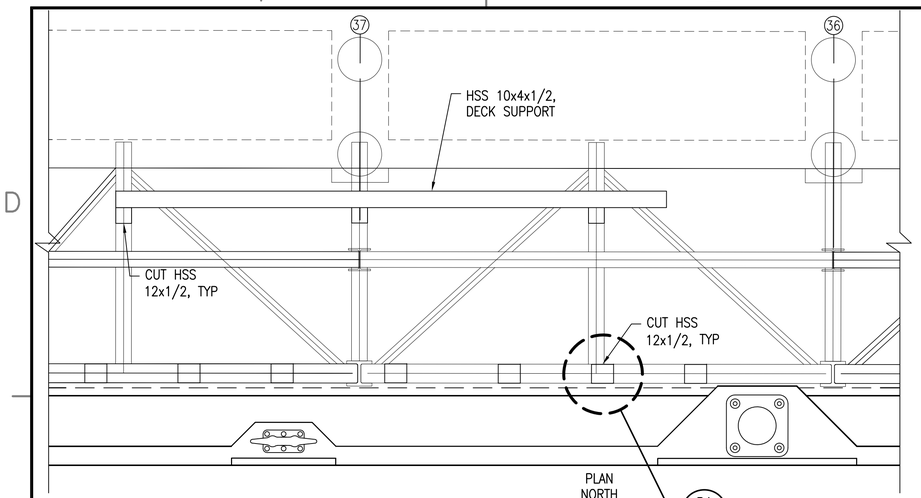

EXISTING FRAMING
SCALE: 1/4" = 1'-0"

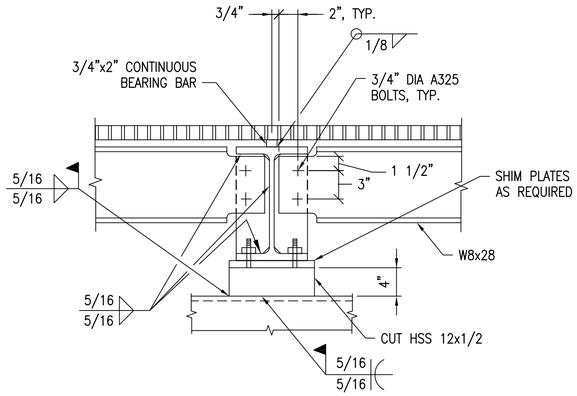

SECTION - FRAME CONNECTION
SCALE: 1 1/2" = 1'-0" — S-511 C3

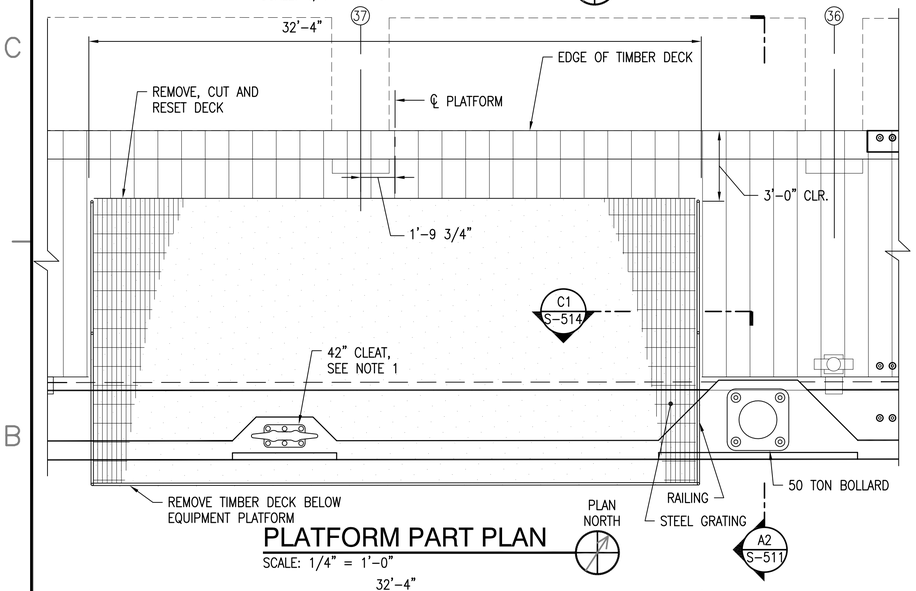

PLATFORM PART PLAN
SCALE: 1/4" = 1'-0"

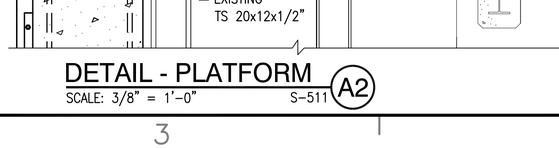

SECTION - PLATFORM FRAMING CONNECTION
SCALE: 1 1/2" = 1'-0" — S-511 B3

SECTION - HSS CONNECTION
SCALE: 1 1/2" = 1'-0" — S-511 B4

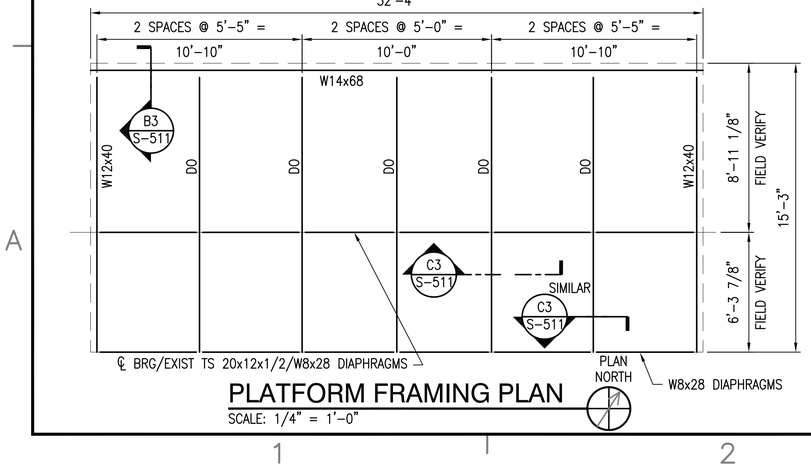

PLATFORM FRAMING PLAN
SCALE: 1/4" = 1'-0"

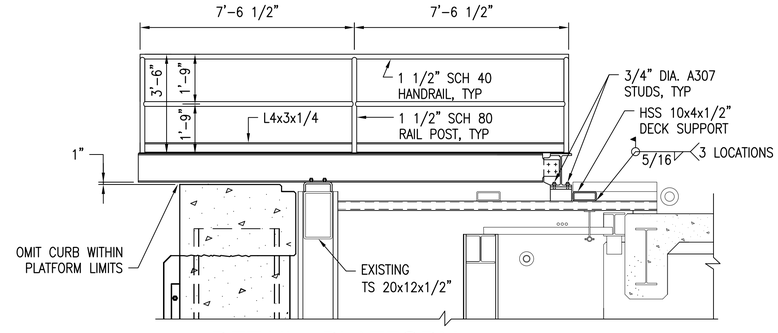

DETAIL - PLATFORM
SCALE: 3/8" = 1'-0" — S-511 A2

NOTE:

RELOCATION OF 42" CLEATS SHALL BE COORDINATED WITH CONTRACTING OFFICER.

1"=1'-0" — 1' 6" 0 1' 3' — 9" 3"

1 1/2"=1'-0" — 1' 6" 0 1' 2' — 9" 3"

3/8"=1'-0" — 4' 0 4' 8'

GRAPHIC SCALE

1/4"=1'-0" — 4' 0 4' 8'

CHECK GRAPHIC SCALE BEFORE USING

APPR	DATE	DESCRIPTION
MJS		
DJM		

NAVFAC

DAVID J. MELO
CIVIL
No. 48692
REGISTERED PROFESSIONAL ENGINEER
COMMONWEALTH OF MASSACHUSETTS
3/7/16
SEAL

MN FST
A JOINT VENTURE
A/E INFO

APPROVED
David W. Trumfield
FOR COMMANDER NAVFAC

ACTIVITY:
PER DOCUMENT FROM PNSY
CODE 980, KITTERY, ME

SATISFACTORY TO DATE: 05/09/16

DES DJM | DRW RWT | CHK DJM

PM/DM: NATHAN LIBBY
BRANCH MANAGER: NATHAN MAHER
FEAD/PM&E: AMIN BAHROUR
FIRE PROTECTION: N/A

DEPARTMENT OF THE NAVY
NAVAL FACILITIES ENGINEERING COMMAND
PUBLIC WORKS DEPARTMENT - MAINE
PORTSMOUTH NAVAL SHIPYARD

NAVAL FACILITIES ENGINEERING COMMAND ~ MID-ATLANTIC
NAVAL SHIPYARD ~ PORTSMOUTH, NH
KITTERY, MAINE

STRUCTURAL REPAIRS AT BERTHS 11A, 11B AND 11C

SERVICE PLATFORM

EPROJECT NO.: 1356489
CONSTR. CONTR. NO. N40085-XX-C-XXXX
NAVFAC DRAWING NO. 12716105
SHEET 109 OF 144

S-511 | FP2-16-745

DRAWFORM REVISION: 10 OCTOBER 2014

FILE NAME: S:\1794\Active\179410203\x\TP-104A PNSY Lifting Study\TP-104A PNSY Lifting Study\02 CADD\08 Structural\FP2-16-745.dwg LAYOUT NAME: SERVICE PLATFORM PLOTTED: Friday, May 13, 2016 - 2:56pm USER: cgoodridge

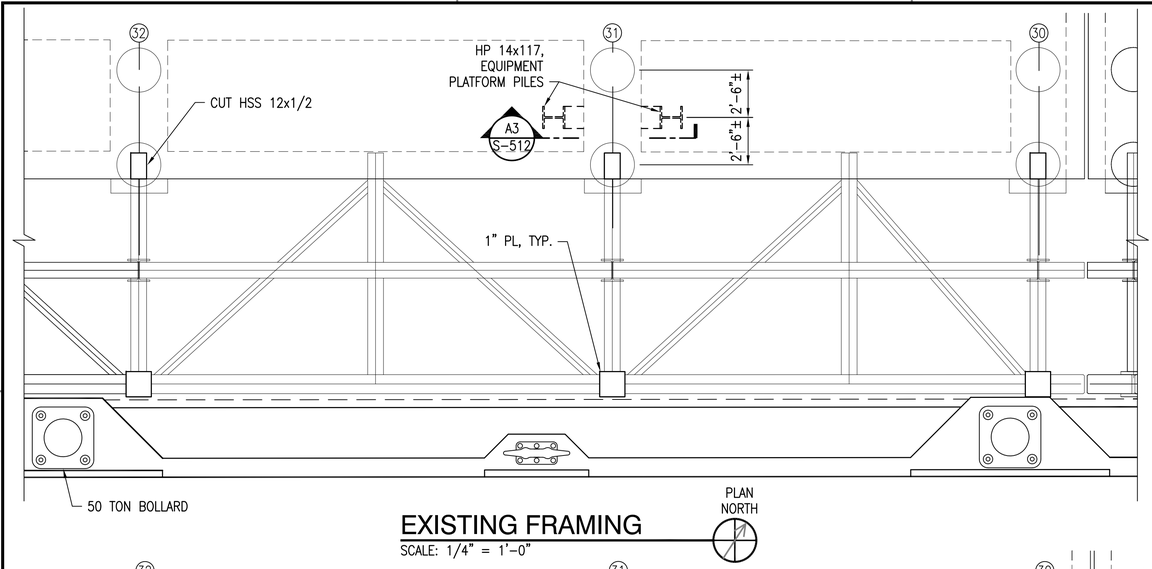

EXISTING FRAMING
SCALE: 1/4" = 1'-0"

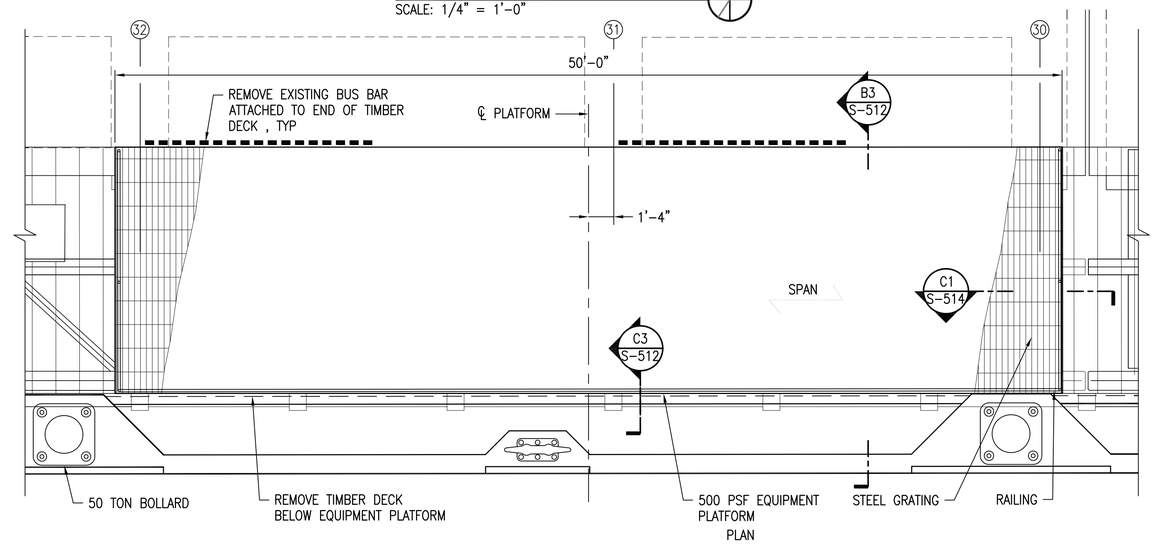

PLATFORM DECK PLAN
SCALE: 1/4" = 1'-0"

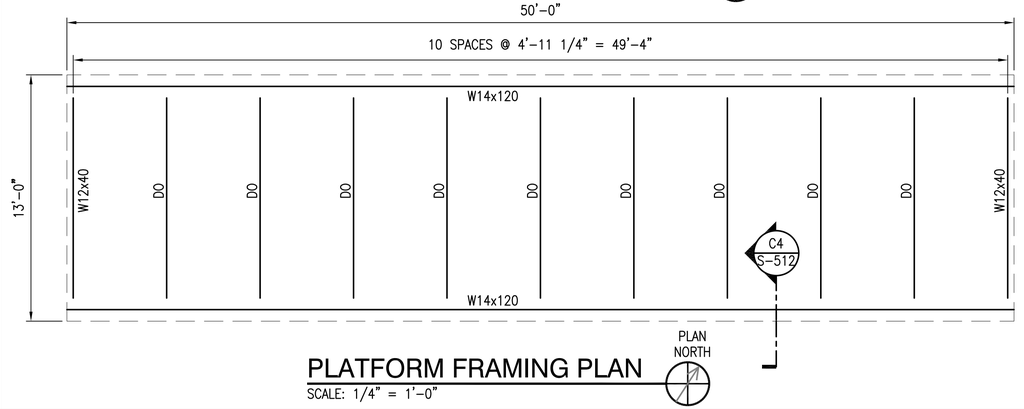

PLATFORM FRAMING PLAN
SCALE: 1/4" = 1'-0"

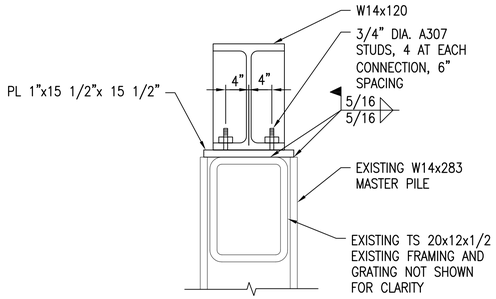

SECTION
SCALE: 1 1/2" = 1'-0" S-512 C3

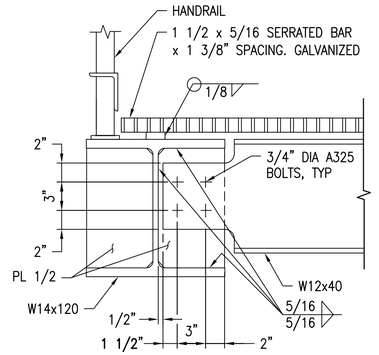

SECTION - PLATFORM FRAMING CONNECTION
SCALE: 1 1/2" = 1'-0" S-512 C4

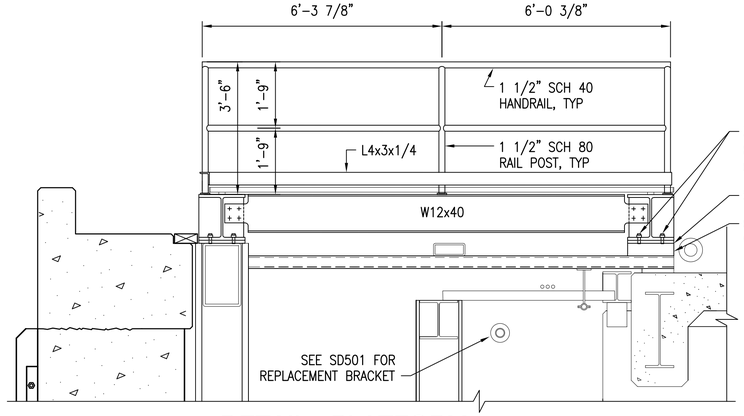

DETAIL - PLATFORM
SCALE: 1/2" = 1'-0" S-512 B3

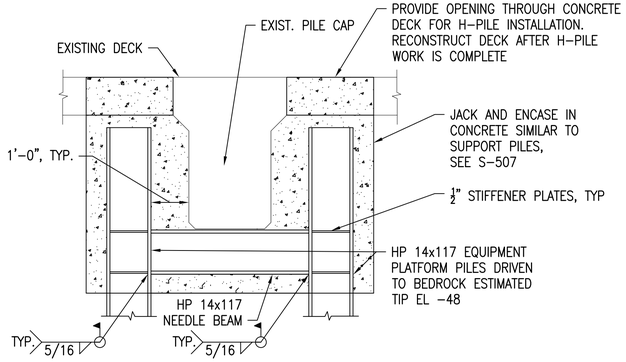

SECTION-SUPPORT PILE
SCALE: 1/2" = 1'-0" S-512 A3

1"=1'-0" 1' 6" 0 1' 3' (9" 3")

1/2"=1'-0" 4' 3' 2' 1' 0 4'

1 1/2"=1'-0" 1' 6" 0 1' 2' (9" 3")

GRAPHIC SCALE
1/4"=1'-0" 4' 0 4' 8'

CHECK GRAPHIC SCALE BEFORE USING

APPR	DATE	DESCRIPTION	STM

NAVFAC

COMMONWEALTH OF MASSACHUSETTS — DAVID J. MELO CIVIL No. 48692 — REGISTERED PROFESSIONAL ENGINEER — 3/7/16 — SEAL

MN FST A JOINT VENTURE A/E INFO

APPROVED (Name and Title): David W. Trumfield FOR COMMANDER NAVFAC

ACTIVITY: PER DOCUMENT FROM PNSY CODE 980, KITTERY ME

SATISFACTORY TO DATE: 05/09/16

DES: DJM | DRW: RWT | CHK: DJM

PM/DM: NATHAN LIBBY

BRANCH MANAGER: NATHAN MAHER

FEAD/PM&E: AMIN BAHROUR

FIRE PROTECTION: N/A

DEPARTMENT OF THE NAVY
NAVAL FACILITIES ENGINEERING COMMAND
PUBLIC WORKS DEPARTMENT - MAINE
PORTSMOUTH NAVAL SHIPYARD

NAVAL FACILITIES ENGINEERING COMMAND ~ MID-ATLANTIC
NAVAL SHIPYARD ~ PORTSMOUTH, NH
KITTERY, MAINE

STRUCTURAL REPAIRS AT BERTHS 11A, 11B AND 11C

EQUIPMENT PLATFORM DETAILS

EPROJECT NO.: 1356489

CONSTR. CONTR. NO. N40085-XX-C-XXXX

NAVFAC DRAWING NO. 12716106

SHEET 110 OF 144

S-512 | FP2-16-746

DRAWFORM REVISION: 10 OCTOBER 2014

FILE NAME: S:\1794\Active\179410203\VP-104A PNSY Lifting Study\VP-104A PNSY Lifting Study\02 CADD\08 Structural\FP2-16-746.dwg LAYOUT NAME: EQUIPMENT PLATFORM DETAILS PLOTTED: Friday, May 13, 2016 - 2:57pm USER: cpodridge

SERVICE BOOM STATIONING

SERVICE BOOM FOUNDATION	STATIONING
1	6+57.05
2	5+82.05
3	2+90.65
4	2+32.65

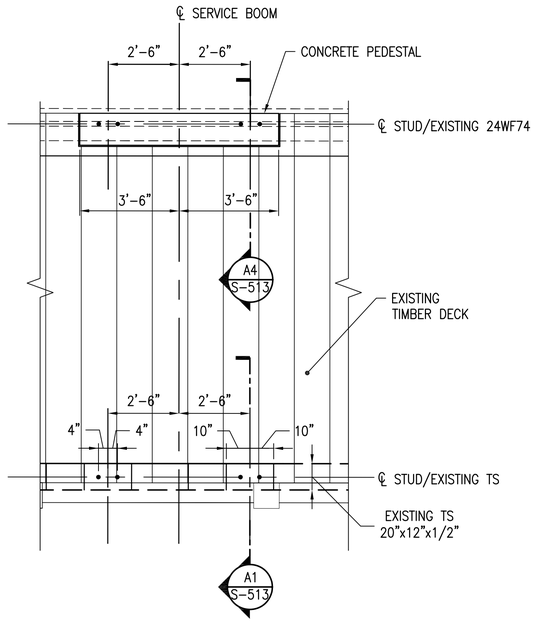

PART PLAN - SERVICE BOOM WITHOUT BULKHEAD

SCALE: 3/8" = 1'–0" S–513 (C1)

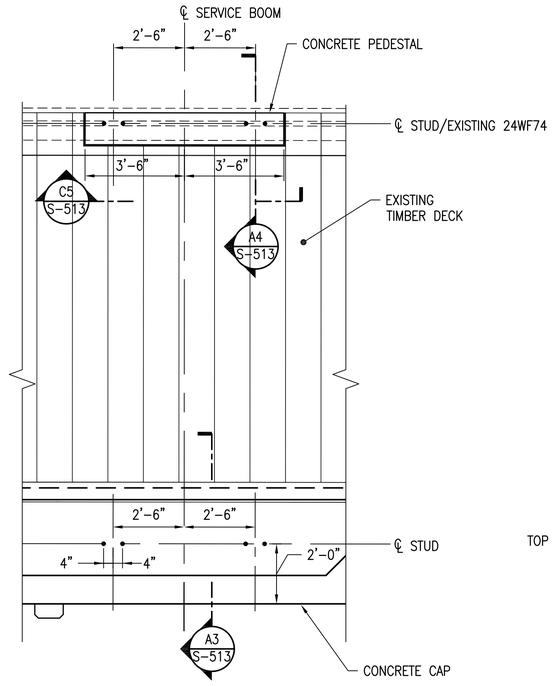

PART PLAN - SERVICE BOOM WITH BULKHEAD

SCALE: 3/8" = 1'–0" S–109, S–110 (C2)

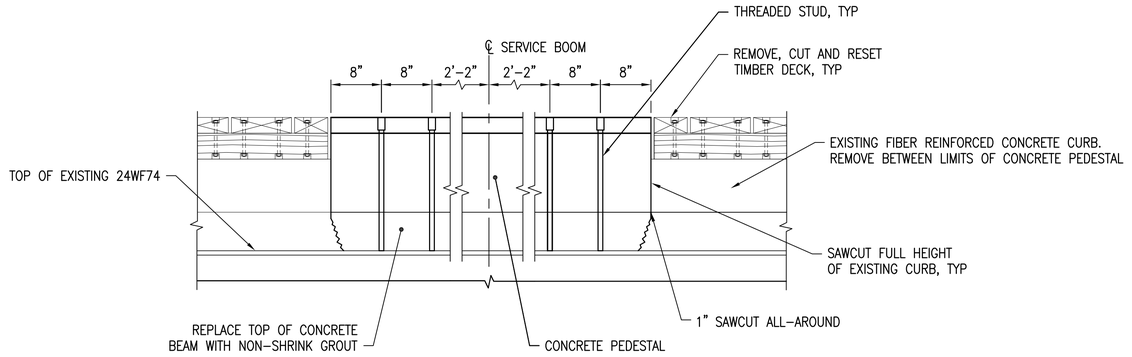

SECTION - CONCRETE PEDESTAL

SCALE: 1" = 1'–0" S–513 (C5)

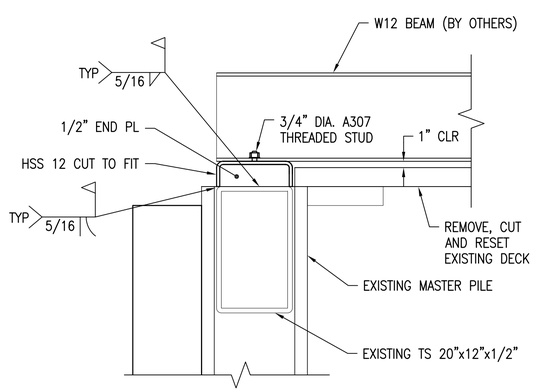

SECTION - SERVICE BOOM WITHOUT BULKHEAD

SCALE: 1" = 1'–0" S–513 (A1)

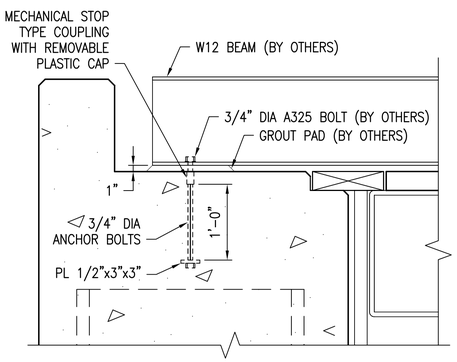

SECTION - SERVICE BOOM WITH BULKHEAD

SCALE: 1" = 1'–0" S–513 (A3)

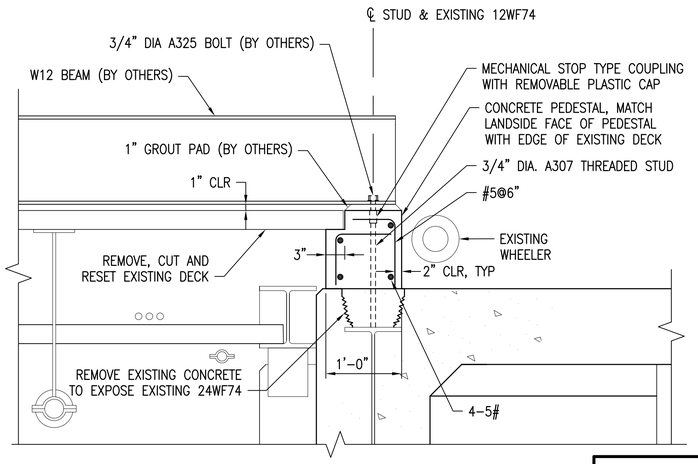

SECTION - SERVICE BOOM LANDSLIDE

SCALE: 1" = 1'–0" S–513 (A4)

GRAPHIC SCALE

1"=20' 20' 0 20' 40'

CHECK GRAPHIC SCALE BEFORE USING

APPR	DATE	DESCRIPTION	MJS

COMMONWEALTH OF MASSACHUSETTS
DAVID J. MELO
CIVIL
No. 48692
Registered
PROFESSIONAL ENGINEER
3/7/16
SEAL

MN FST
A JOINT VENTURE
A/E INFO

APPROVED
David W. Thornfield
FOR COMMANDER NAVFAC

ACTIVITY:
PER DOCUMENT FROM PNSY
CODE 980, KITTERY ME

SATISFACTORY TO DATE: 05/09/16

DES	DJM	DRW	RWT	CHK	DJM

PM/DM: NATHAN LIBBY
BRANCH MANAGER: NATHAN MAHER
FEAD/PM&E: AMIN BAHROUR
FIRE PROTECTION: N/A

DEPARTMENT OF THE NAVY
NAVAL FACILITIES ENGINEERING COMMAND
PUBLIC WORKS DEPARTMENT – MAINE
PORTSMOUTH NAVAL SHIPYARD

NAVAL FACILITIES ENGINEERING COMMAND – MID-ATLANTIC
NAVAL SHIPYARD – PORTSMOUTH, NH
KITTERY, MAINE

STRUCTURAL REPAIRS
AT BERTHS 11A, 11B AND 11C

SERVICE BOOM FOUNDATIONS

EPROJECT NO.: 1356489
CONSTR. CONTR. NO.: N40085–XX–C–XXXX
NAVFAC DRAWING NO.: 12716107
SHEET 111 OF 144

S-513 FP2-16-747

DRAWFORM REVISION: 10 OCTOBER 2014

FILE NAME: S:\1794\Active\179410203\V\TP-1044 PNSY Lifting Study\TP-1044 PNSY Lifting Study\02 CAD\08 Structure\FP2-16-747.dwg LAYOUT NAME: SERVICE BOOM FOUNDATIONS PLOTTED: Friday, May 13, 2016 – 2:57pm USER: cgoodridge

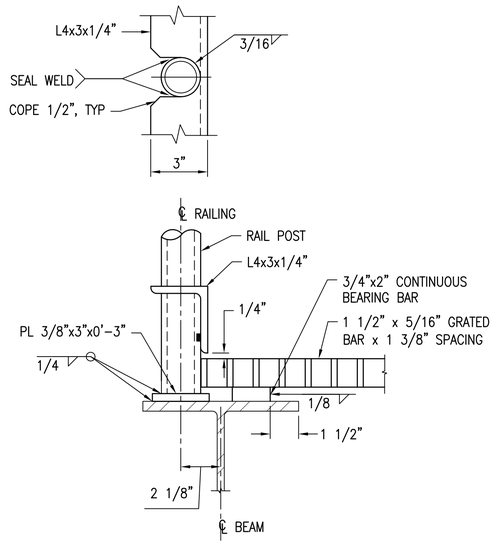

DETAIL - RAIL POST (C1)

SCALE: 3" = 1'-0" S-514

NOTES:

1. STEEL GRATING SHALL BE HOT-DIPPED GALVANIZED.
2. STEEL GRATING SHALL BE SECURED TO THE SUPPORT FRAMING WITH STAINLESS STEEL CLIPS AND BOLTS OR STUD BOLTS.
3. A MINIMUM OF 2 HOLD-DOWN CLIPS PER PIECE OF GRATING ON EVERY SUPPORT MEMBER. MAXIMUM CLIP SPACING IS 24 INCHES.
4. PROVIDE 3/16" x DEPTH OF GRATING EDGING ALONG ALL EXPOSED ENDS OF BEARING BARS.

GRAPHIC SCALE

3"=1'-0"

4" 2" 0 6" 1'

3" 1"

CHECK GRAPHIC SCALE BEFORE USING

APPR	DATE	DESCRIPTION	SYM

NAVFAC

COMMONWEALTH OF MASSACHUSETTS
DAVID J. MELO
CIVIL
No. 48692
REGISTERED PROFESSIONAL ENGINEER
3/7/16
SEAL

MNFST
A JOINT VENTURE
A/E INFO

APPROVED
David W. Trumfield
FOR COMMANDER NAVFAC

ACTIVITY:
PER DOCUMENT FROM PNSY
CODE 980, KITTERY ME

SATISFACTORY TO DATE: 05/09/16

DES	DJM	DRW	CHG	CHK	DJM

PM/DM: NATHAN LIBBY
BRANCH MANAGER: NATHAN MAHER
FEAD/PM&E: AMN BAHROUR
FIRE PROTECTION: N/A

DEPARTMENT OF THE NAVY
NAVAL FACILITIES ENGINEERING COMMAND
PUBLIC WORKS DEPARTMENT - MAINE
PORTSMOUTH NAVAL SHIPYARD

NAVAL FACILITIES ENGINEERING COMMAND ~ MID-ATLANTIC
NAVAL SHIPYARD - PORTSMOUTH, NH

STRUCTURAL REPAIRS AT BERTHS 11A, 11B AND 11C

KITTERY, MAINE

MISCELLANEOUS PLATFORM DETAILS

EPROJECT NO.: 1356489

CONSTR. CONTR. NO.
N40085-XX-C-XXXX

NAVFAC DRAWING NO.
12716108

SHEET 112 OF 144

S-514 | FP2-16-748

DRAWFORM REVISION: 10 OCTOBER 2014

FILE NAME: S:\1794\Active\179410203\1\TP-104A PNSY Lifting Study\TP-104A PNSY Lifting Study\02 CAD\08 Structural\FP2-16-748.dwg LAYOUT NAME: MISCELLANEOUS PLATFORM DETAILS PLOTTED: Friday, May 13, 2016 - 2:57pm USER: cgoodridge

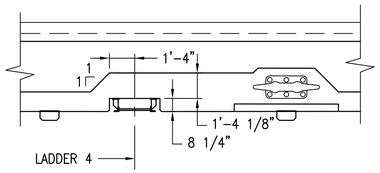

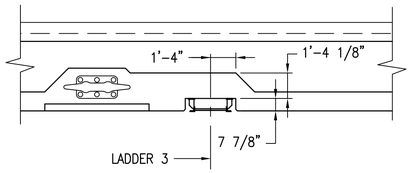

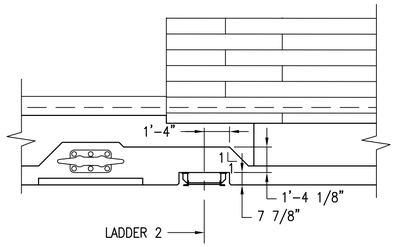

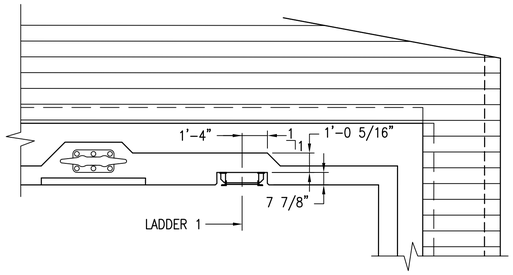

DECK PLAN

SCALE: 1/4"=1'-0"

PLAN NORTH

LADDER LOCATION

LADDER No	STATION
1	12+06.25
2	8+04.38
3	4+54.38
4	0+90.38

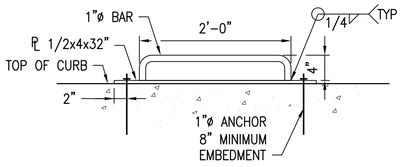

DETAIL - GRAB BAR

SCALE: 1" = 1'-0" S-515 C2

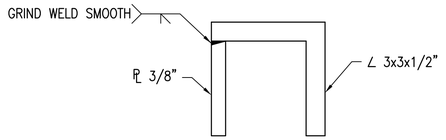

SECTION - ANGLE

SCALE: 6" = 1'-0" S-515 C4

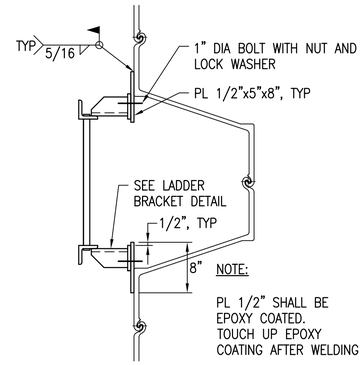

SECTION

SCALE: 1" = 1'-0" S-515 C5

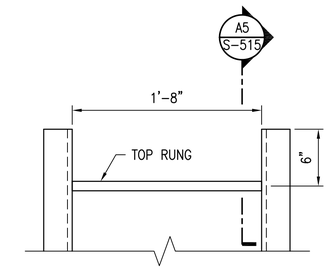

DETAIL - TOP OF LADDER

SCALE: 1 1/2" = 1'-0" S-515 C1

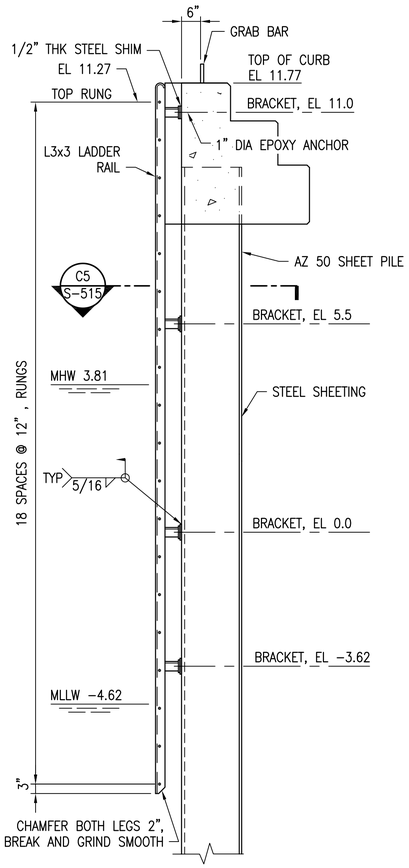

SECTION - LADDER 1

SCALE: 1/2" = 1'-0" S-515 A2

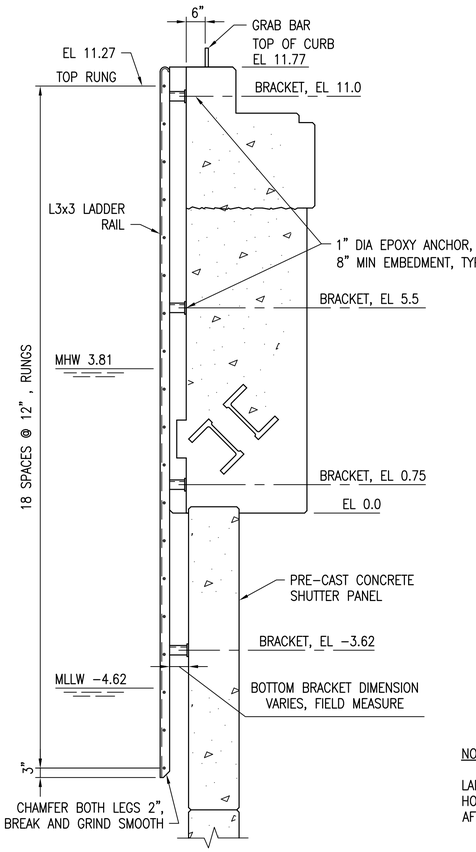

SECTION - LADDERS 2 THRU 4

SCALE: 1/2" = 1'-0" S-515 A3

NOTE:

LADDERS SHALL BE HOT-DIP GALVANIZED AFTER FABRICATION.

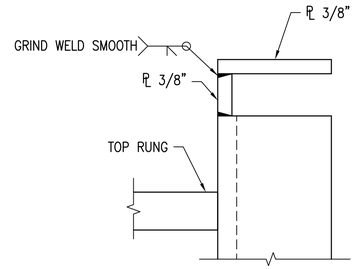

SECTION - FILLER PLATE

SCALE: 6" = 1'-0" S-515 B5

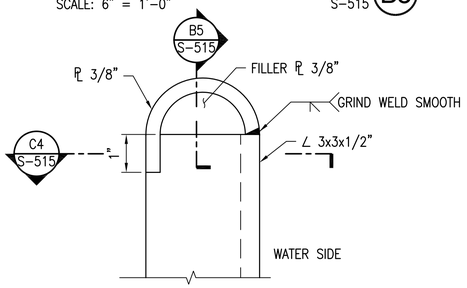

SECTION - LADDER LEG

SCALE: 6" = 1'-0" S-515 A5

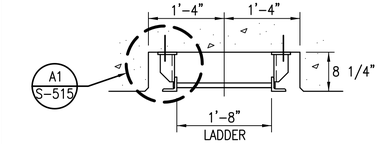

PLAN - LADDER

SCALE: 3/4"=1'-0" S-515 B1

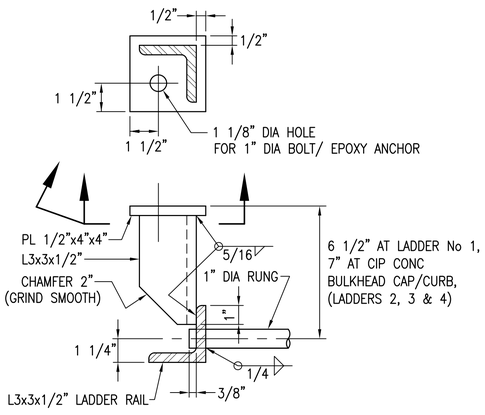

DETAIL - LADDER BRACKET

SCALE: 3" = 1'-0" S-515 A1

1/4"=1'-0" 4' 0 4' 8'

GRAPHIC SCALE

3/4"=1'-0" 1' 0' 1' 2' 4'

CHECK GRAPHIC SCALE BEFORE USING

APPR | DATE | DESCRIPTION | STM

NAVFAC

SEAL

MN FST A JOINT VENTURE

A/E INFO

APPROVED
Date Signed
David W. Grunfeld
FOR COMMANDER NAVFAC

ACTIVITY:
PER DOCUMENT FROM PNSY
CODE 980, KITTERY ME

SATISFACTORY TO DATE: 05/09/16

DES: MN | DRW: RWT | CHK: MN

PM/DM: NATHAN LIBBY

BRANCH MANAGER: NATHAN MAHER

FEAD/PM&E: AMIN BAHROUR

FIRE PROTECTION: N/A

DEPARTMENT OF THE NAVY
NAVAL FACILITIES ENGINEERING COMMAND
PUBLIC WORKS DEPARTMENT - MAINE
PORTSMOUTH NAVAL SHIPYARD

NAVAL FACILITIES ENGINEERING COMMAND ~ MID-ATLANTIC
NAVAL SHIPYARD ~ PORTSMOUTH, NH

STRUCTURAL REPAIRS
AT BERTHS 11A, 11B AND 11C
KITTERY, MAINE

LADDER DETAILS

EPROJECT NO.: 1356489

CONSTR. CONTR. NO.
N40085-XX-C-XXXX

NAVFAC DRAWING NO.
12716109

SHEET 113 OF 144

S-515 | FP2-16-749

DRAWFORM REVISION: 10 OCTOBER 2014

FILE NAME: S:\1794\Active\1794102031\TP-104A PNSY Lifting Study\TP-104A PNSY Lifting Study\02 CADD\08 Structural\FP2-16-749.dwg LAYOUT NAME: LADDER DETAILS PLOTTED: Friday, May 13, 2016 - 2:58pm USER: cgoodridge

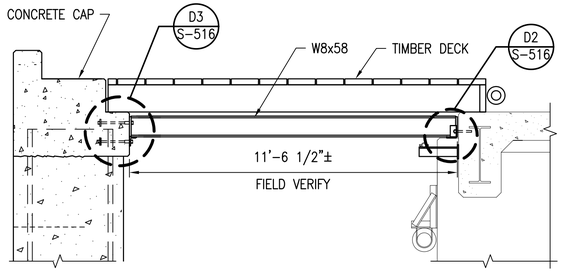

SECTION - STRUT BEAM (D1)
SCALE: 3/8" = 1'-0"

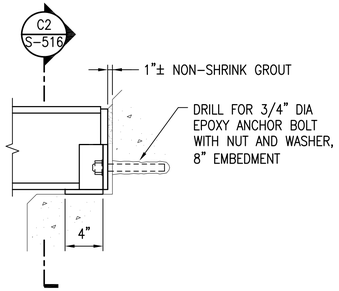

DETAIL - LANDSIDE CONNECTION (D2)
SCALE: 1 1/2" = 1'-0" S-516

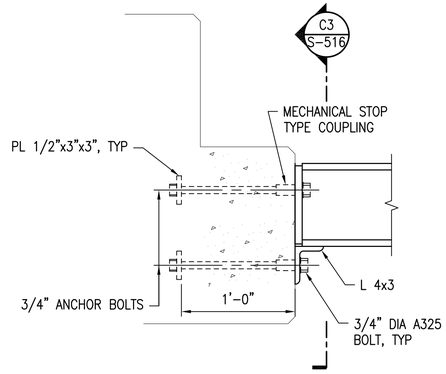

DETAIL - BULKHEAD CONNECTION (D3)
SCALE: 1 1/2" = 1'-0" S-516

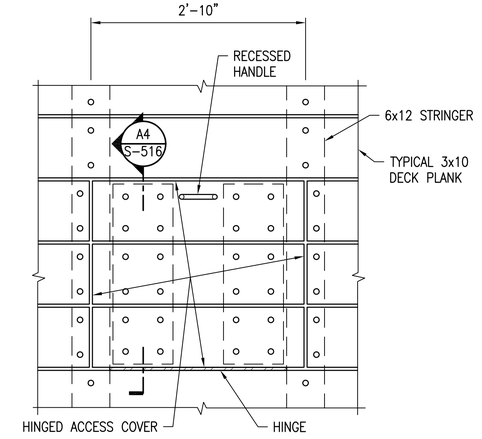

DETAIL - ACCESS COVER PLAN AT BERTH 11A (D4)
SCALE: 1" = 1'-0" S-108

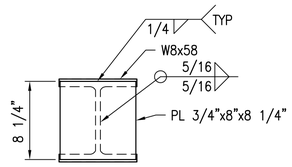

DETAIL - END PLATE (C1)
SCALE: 1 1/2" = 1'-0" S-516

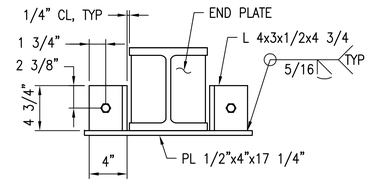

SECTION - LANDSIDE CONNECTION (C2)
SCALE: 1 1/2" = 1'-0" S-516

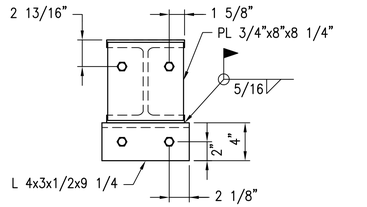

SECTION - BULKHEAD CONNECTION (C3)
SCALE: 1 1/2" = 1'-0" S-516

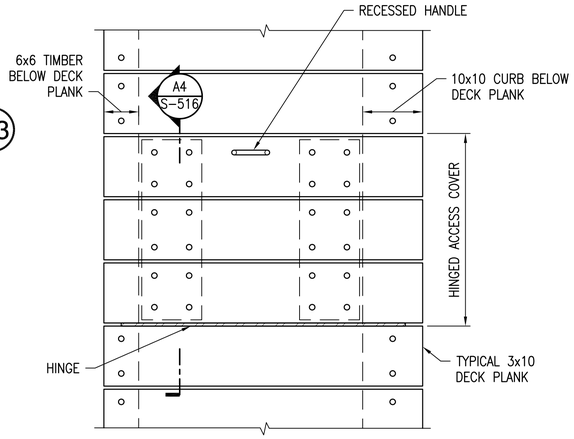

DETAIL - ACCESS COVER PLAN AT BERTH 11A HEAD END (B4)
SCALE: 1" = 1'-0" S-108

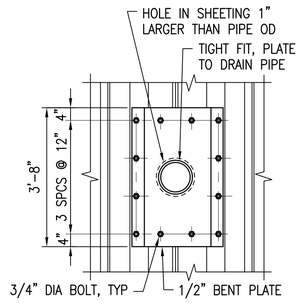

ELEVATION (B1)
SCALE: 1/2" = 1'-0" S-516

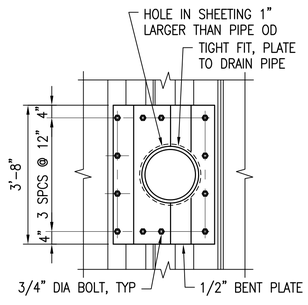

ELEVATION (B2)
SCALE: 1/2" = 1'-0" S-516

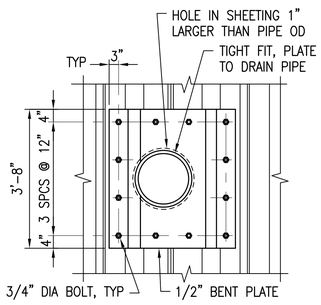

ELEVATION (B3)
SCALE: 1/2" = 1'-0" S-516

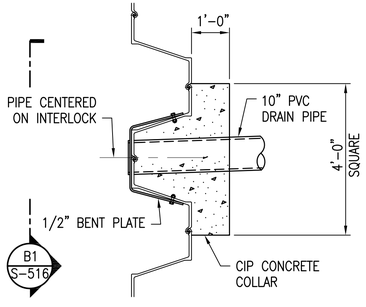

PLAN - OUTFALL No 15 (A1)
SCALE: 1/2" = 1'-0" S-516

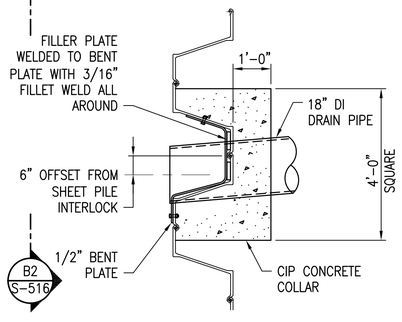

PLAN - OUTFALL No 16 (A2)
SCALE: 1/2" = 1'-0" S-516

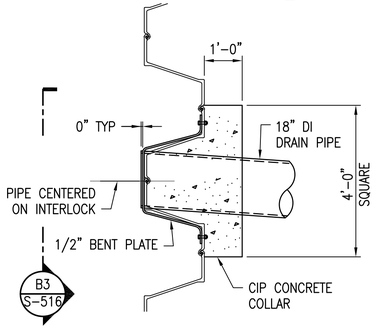

PLAN - OUTFALL No 17 (A3)
SCALE: 1/2" = 1'-0" S-516

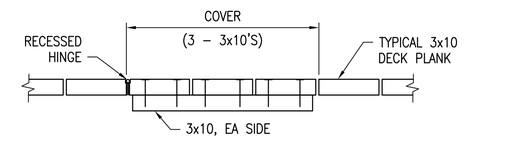

SECTION - HINGED ACCESS COVER (A4)
SCALE: 1" = 1'-0" S-516

NOTES:
1. ACCESS COVER TO BE LOCATED ABOVE H.P. AIR VALVES. LOCATIONS SHALL BE APPROVED BY THE CONTRACTING OFFICER PRIOR TO INSTALLATION.

GRAPHIC SCALE
1/2"=1'-0" 4' 3' 2' 1' 0 4'
CHECK GRAPHIC SCALE BEFORE USING

APPR | DATE | DESCRIPTION | STM

NAVFAC

COMMONWEALTH OF MASSACHUSETTS
DAVID J. MELO
CIVIL
No. 48692
REGISTERED PROFESSIONAL ENGINEER
3/7/16
SEAL

MN FST
A JOINT VENTURE
A/E INFO

APPROVED
David W. Trumfield
FOR COMMANDER NAVFAC

ACTIVITY:
PER DOCUMENT FROM PNSY
CODE 980, KITTERY ME

SATISFACTORY TO DATE: 05/09/16

DES: DJM | DRW: CHG | CHK: DJM

PM/DM: NATHAN LIBBY
BRANCH MANAGER: NATHAN MAHER
FEAD/PM&E: AMIN BAHROUR
FIRE PROTECTION: N/A

DEPARTMENT OF THE NAVY
NAVAL FACILITIES ENGINEERING COMMAND
PUBLIC WORKS DEPARTMENT - MAINE
PORTSMOUTH NAVAL SHIPYARD

NAVAL FACILITIES ENGINEERING COMMAND – MID-ATLANTIC
NAVAL SHIPYARD – PORTSMOUTH, NH
KITTERY, MAINE

STRUCTURAL REPAIRS
AT BERTHS 11A, 11B AND 11C

MISCELLANEOUS DETAILS

EPROJECT NO.: 1356489
CONSTR. CONTR. NO.
N40085-XX-C-XXXX
NAVFAC DRAWING NO.
12716110
SHEET 114 OF 144
S-516 | FP2-16-750

DRAWFORM REVISION: 10 OCTOBER 2014

FILE NAME: S:\1794\Active\179410203\VTP-104A PNSY Lifting Study\TP-104A PNSY Lifting Study\02 CAD\08 Structural\FP2-16-750.dwg LAYOUT NAME: MISCELLANEOUS DETAILS PLOTTED: Friday, May 13, 2016 - 2:58pm USER: cgoodridge

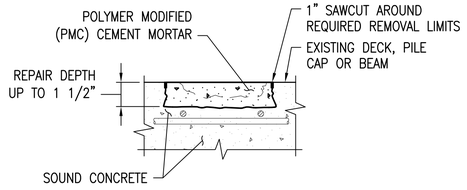

TYPE A (SHOWN) - SHALLOW SPALL REPAIR (D1)

TYPE A1 (SIMILAR)

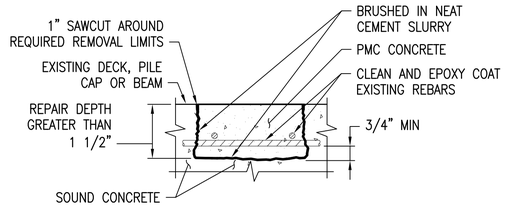

TYPE B (SHOWN) - DEEP SPALL REPAIR (D2)

TYPE B1 (SIMILAR)

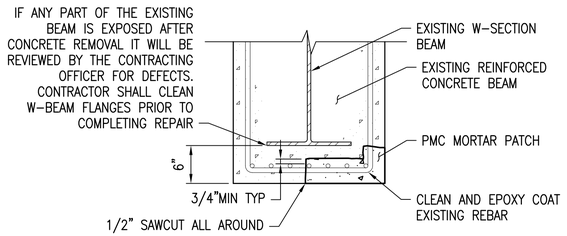

TYPE C1 - BEAM REPAIR (D4)

TYPE B1 (SIMILAR)

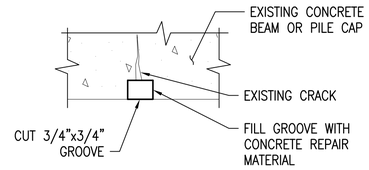

TYPE D - CRACK REPAIR (D5)

TYPE B1 (SIMILAR)

CONCRETE REPAIR DETAILS

NOT TO SCALE

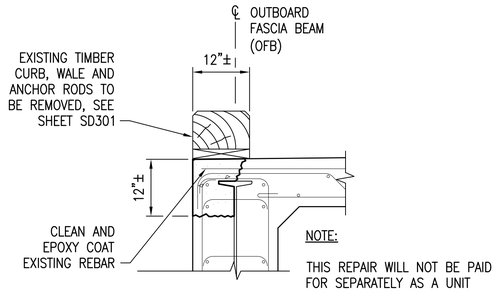

DETAIL - WHARF DECK EDGE REPAIR (C1)

SCALE: 3/4" = 1'-0"

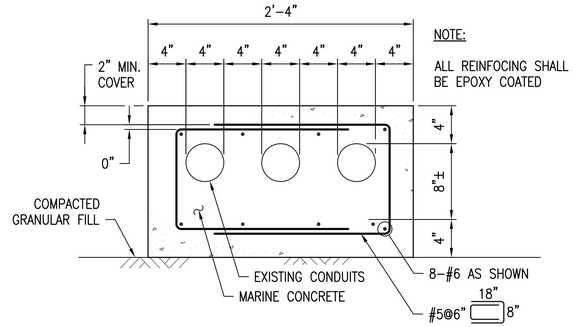

SECTION - REINFORCED DUCT BANK (C2)

SCALE: 1 1/2" = 1'-0"

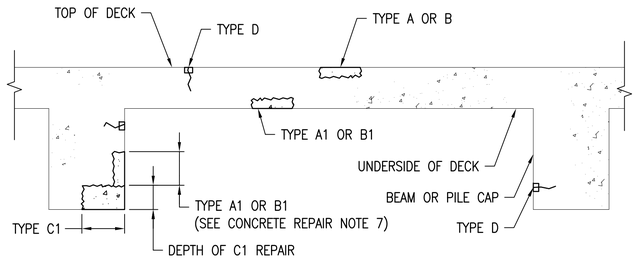

REPAIR TYPE SCHEMATIC DETAIL (C4)

SCALE: 1" = 1'-0"

CONCRETE REPAIR NOTES:

1. THE FINISHED GRADE OF THE REPAIRED AREAS SHALL MATCH THE EXISTING FINISHED GRADE, UNLESS NOTED OTHERWISE.
2. TYPE A, A1, B, B1 AND C1 REPAIRS SHALL CONSIST OF PATCHING SPALLED AND DELAMINATED AREAS AS SHOWN. THE CONTRACTOR SHALL MARK UP THE LIMITS OF EACH AREA TO BE REPAIRED IN THE PRESENCE OF THE CONTRACTING OFFICE. THE EXTENT, LOCATION AND REPAIR TYPE OF ALL CONCRETE REPAIRS SHALL BE FIELD VERIFIED AND APPROVED BY THE CONTRACTING OFFICER AFTER THE CONTRACTOR HAS SOUNDED AND MARKED OUT THE REPAIR AREAS. REPAIR CONFIGURATIONS SHALL BE KEPT AS SIMPLE AS POSSIBLE, PREFERABLY WITH SQUARE CORNERS. THE UNSOUND CONCRETE SHALL BE REMOVED WITHIN THE LIMITS TO THE SATISFACTION OF THE CONTRACTING OFFICER, AND THE AREAS SHALL BE THOROUGHLY CLEANED PRIOR TO PLACING THE PATCHING MATERIAL.
3. TYPE A AND A1 REPAIRS SHALL CONSIST OF PMC MORTAR PATCHES. THIS TYPE OF REPAIR SHALL BE USED FOR ALL PATCHES LESS THAN 1-1/2" DEEP OR LESS THAN 10 SQUARE FEET IN AREA WHERE NEEDED. MATERIAL SHALL BE SUITABLE FOR HORIZONTAL, VERTICAL AND OVERHEAD APPLICATIONS.
4. TYPE B AND B1 REPAIRS SHALL CONSIST OF PMC CONCRETE PATCHES. THIS TYPE OF REPAIR SHALL BE USED FOR ALL PATCHES WITH A MINIMUM DEPTH OF 1-1/2" AND A MINIMUM SURFACE AREA OF 10 SQUARE FEET WHERE NEEDED. MATERIAL SHALL BE SUITABLE FOR HORIZONTAL, VERTICAL AND OVERHEAD APPLICATIONS.
5. TYPE C1 REPAIRS SHALL CONSIST OF PATCHING DETERIORATED AREAS ON THE BOTTOM OF BEAMS. MATERIAL SHALL BE SUITABLE FOR VERTICAL AND OVERHEAD APPLICATIONS.
6. TYPE D REPAIRS SHALL CONSIST OF ROUTING OUT EXISTING CRACKS IN THE DECK PILE CAPS AND BEAMS. THE CONTRACTOR SHALL MARK UP THE LIMITS OF EACH CRACK TO BE REPAIRED IN THE PRESENCE OF THE CONTRACTING OFFICER. CUT GROOVE IN THE CONCRETE TO THE SATISFACTION OF THE CONTRACTING OFFICER, AND THE CUT GROOVE SHALL BE THOROUGHLY CLEANED PRIOR TO PLACING REPAIR MATERIAL. MATERIAL SHALL BE SUITABLE FOR VERTICAL AND OVERHEAD APPLICATIONS.
7. AT BEAM REPAIR LOCATIONS THAT REQUIRE CORNER REPAIRS WITH BOTH TYPE C1 (BOTTOM) AND TYPE A1 OR B1 (SIDE FACE), THE REPAIR AREA OF THE TYPE A1 OR B1 SHALL NOT INCLUDE THE VERTICAL DEPTH OF THE TYPE C1 REPAIR.
8. WHEN MORE THAN 25% OF THE SURFACE AREA OF A REINFORCING BAR IS EXPOSED, THE CONCRETE SHALL BE CHIPPED OUT AROUND THE BAR TO A MINIMUM DEPTH OF 3/4" BEHIND THE BAR AND THE BAR SHALL BE THOROUGHLY CLEANED AND EPOXY COATED PRIOR TO PLACING THE PATCH MATERIAL.

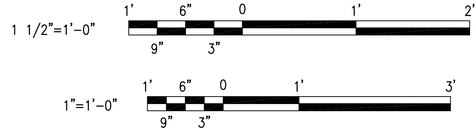

GRAPHIC SCALE

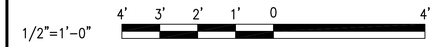

CHECK GRAPHIC SCALE BEFORE USING

APPR	DATE	DESCRIPTION	SYM

NAVFAC

COMMONWEALTH OF MASSACHUSETTS
MARK NICOLAZZO
CIVIL
No. 51724
REGISTERED PROFESSIONAL ENGINEER
SEAL

MN FST
A JOINT VENTURE
A/E INFO

APPROVED (Signature Optional)
David W. Trumfield
FOR COMMANDER NAVFAC

ACTIVITY:
PER DOCUMENT FROM PNSY
CODE 980, KITTERY ME

SATISFACTORY TO DATE: 05/09/16

DES: DJM	DRW: RWT	CHK: DJM

PM/DM: NATHAN LIBBY
BRANCH MANAGER: NATHAN MAHER
FEAD/PM&E: AMIN BAHROUR
FIRE PROTECTION: N/A

DEPARTMENT OF THE NAVY
NAVAL FACILITIES ENGINEERING COMMAND
PUBLIC WORKS DEPARTMENT - MAINE
PORTSMOUTH NAVAL SHIPYARD

NAVAL FACILITIES ENGINEERING COMMAND ~ MID-ATLANTIC
NAVAL SHIPYARD - PORTSMOUTH, NH
KITTERY, MAINE

STRUCTURAL REPAIRS
AT BERTHS 11A, 11B AND 11C

REPAIR DETAILS - SHEET 1 OF 2

EPROJECT NO.: 1356489

CONSTR. CONTR. NO.
N40085-XX-C-XXXX

NAVFAC DRAWING NO.
12716111

SHEET 115 OF 144

S-517 | FP2-16-751

DRAWFORM REVISION: 10 OCTOBER 2014

FILE NAME: S:\1794\Active\179410203\VP-1044 PNSY Lifting Study\VP-1044 PNSY Lifting Study\02 CAD\08 Structural\FP2-16-752.dwg LAYOUT NAME: REPAIR DETAILS - SHEET 1 OF 2 PLOTTED: Friday, May 13, 2016 - 2:59pm USER: cgoodridge

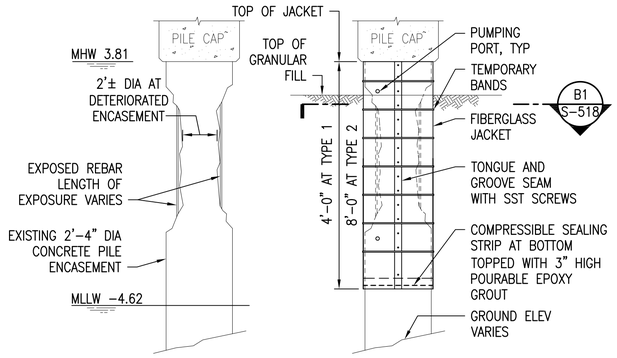

ELEVATION - TYPE 1 AND 2 REPAIR (D1)

SCALE: 3/8"=1'-0" S-518

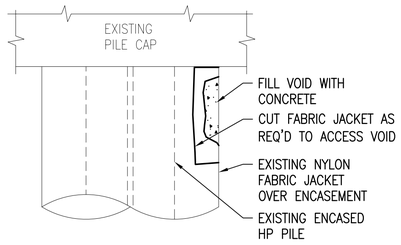

NOTE: FOR BIDDING PURPOSES, ASSUME 1 CF OF VOID TO BE FILLED AT EACH PILE

DETAIL - TYPE 3 REPAIR (D2)

SCALE: 1"=1'-0" S-518

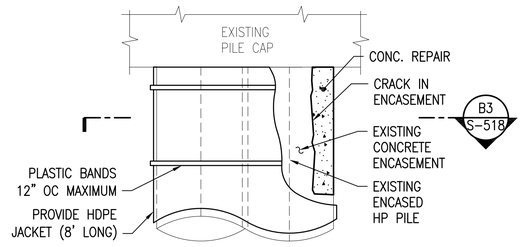

NOTE: FOR BIDDING PURPOSES, ASSUME 3 CF OF MATERIAL TO BE REMOVED AND REPLACED AT EACH PILE

DETAIL - TYPE 4 REPAIR (D3)

SCALE: 1"=1'-0" S-518

PILE ENCASEMENT REPAIR DETAILS

SCALE: 1' = 1'-0"

PILE ENCASEMENT REPAIR NOTES:

1. EXISTING WHARF PILES ARE TYPICALLY ENCASED. ENCASEMENT IS COMPRISED OF EITHER ORIGINAL CONCRETE (CIRCA 1941) OR PREVIOUSLY REPAIRED JACKETS MADE WITH NYLON FABRIC FORMS (CIRCA 1978). TYPE 1 AND 2 PILE ENCASEMENT REPAIRS ARE FOR ORIGINAL CONCRETE. TYPE 3 AND 4 PILE ENCASEMENT REPAIRS ARE FOR THE NYLON FABRIC FORM JACKETS. TYPE 5 PILE JACKET ARE PILES WITHOUT EXISTING ENCASEMENTS.
2. TYPE 1 AND 2 PILE ENCASEMENT REPAIRS ARE COMPRISED OF REMOVING LOOSE CONCRETE, PRESSURE WASHING AREA, INSTALLING FIBERGLASS JACKETS WITH NON-CORROSIVE STANDOFFS, TEMPORARY STRAPS AND FILLING THE ANNULUS WITH CEMENTITIOUS GROUT.
3. TYPE 3 ENCASEMENT REPAIRS ARE COMPRISED OF FILLING VOIDS WITHIN THE EXISTING JACKET. REMOVE LOOSE CONCRETE AND MARINE GROWTH WITHIN AND AROUND THE VOIDS TO BE FILLED. AREAS SHALL BE THOROUGHLY CLEANED PRIOR TO PLACING THE PATCHING MATERIAL. VOIDS SHALL BE FILLED WITH STRUCTURAL CONCRETE REPAIR MATERIAL SUITABLE FOR UNDERWATER AND VERTICAL USE.
4. TYPE 4 ENCASEMENT REPAIRS ARE COMPRISED OF REMOVING DELAMINATED/SPALLED AND LOOSE CONCRETE ENCASEMENT. THE AREAS SHALL BE THOROUGHLY CLEANED PRIOR TO PLACING THE PATCHING MATERIAL. RECONSTRUCT ENCASEMENT TO ITS PREVIOUS DIAMETER AND PROVIDE HIGH DENSITY POLYURETHANE JACKET SECURED WITH PLASTIC STRAPS.
5. TYPE 5 PILE JACKETS ARE COMPRISED OF REMOVING MARINE GROWTH AND LOOSE COATING AND COVERING (TO 1' BELOW LENGTH OF PILE TO BE JACKETED) EXPOSED STEEL WITH CORROSION PREVENTING PASTE. INSTALL JACKET PER MANUFACTURERS' RECOMMENDATIONS.
6. ALL EXISTING REINFORCING AND HP PILE SECTIONS THAT ARE EXPOSED SHALL BE CLEANED AND FREE OF SCALE AND RUST PRIOR TO INSTALLATION OF REPAIR.

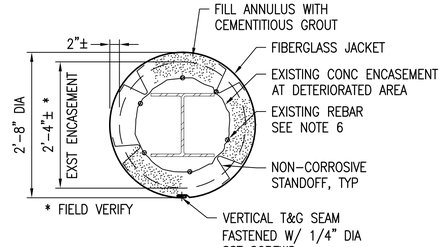

SECTION (B1)

SCALE: 3/4"=1'-0" S-518

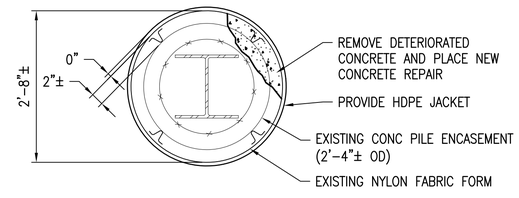

SECTION (B3)

SCALE: 3/4"=1'-0" S-518

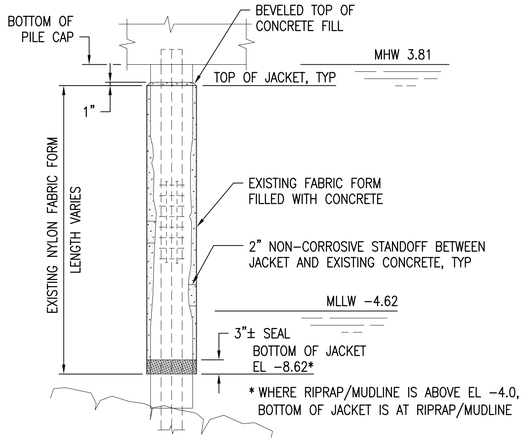

TYPICAL SECTION - EXISTING JACKET (A1)

SCALE: 1/4"=1'-0" S-518

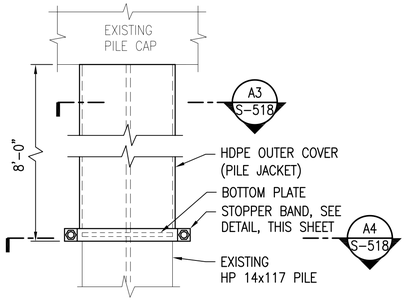

ELEVATION - TYPE 5 PILE JACKET (A2)

SCALE: 1"=1'-0" S-518

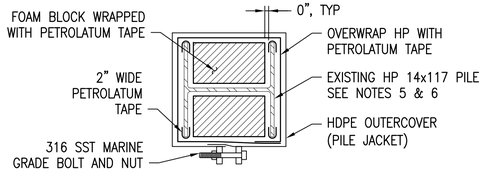

SECTION (A3)

SCALE: 1"=1'-0" S-518

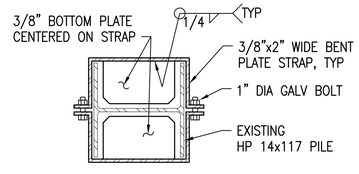

NOTE:

STOPPER BAND AND BOTTOM PLATE SHALL BE SIZED TO SUIT EXISTING PILE AND NEW JACKET. HOT DIP GALVANIZE STOPPER ASSEMBLY AFTER FABRICATION

SECTION - STOPPER BAND (A4)

SCALE: 1"=1'-0" S-518

NOTE:

SEE SHEET S-121 AND S-122 FOR JACKET REPAIR LOCATIONS.

GRAPHIC SCALE

1"=1'-0" (1' 6" 0 1' 3"; 9" 3")

3/4"=1'-0" (1' 0' 1' 2' 4')

CHECK GRAPHIC SCALE BEFORE USING

			APPR
			DATE
			DESCRIPTION
			SYM

NAVFAC

SEAL

MN FST A JOINT VENTURE

A/E INFO

APPROVED
David W. Grunfeld
FOR COMMANDER NAVFAC

ACTIVITY:
PER DOCUMENT FROM PNSY CODE 980, KITTERY ME

SATISFACTORY TO DATE: 05/09/16

DES: MN | DRW: AMS | CHK: MN

PM/DM: NATHAN LIBBY

BRANCH MANAGER: NATHAN MAHER

FEAD/PM&E: AMN BAHROUR

FIRE PROTECTION: N/A

DEPARTMENT OF THE NAVY
NAVAL FACILITIES ENGINEERING COMMAND
PUBLIC WORKS DEPARTMENT - MAINE
PORTSMOUTH NAVAL SHIPYARD

NAVAL FACILITIES ENGINEERING COMMAND ~ MID-ATLANTIC
NAVAL SHIPYARD - PORTSMOUTH, NH
KITTERY, MAINE

STRUCTURAL REPAIRS AT BERTHS 11A, 11B AND 11C

REPAIR DETAILS - SHEET 2 OF 2

EPROJECT NO.: 1356489

CONSTR. CONTR. NO. N40085-XX-C-XXXX

NAVFAC DRAWING NO. 12716112

SHEET 116 OF 144

S-518 | FP2-16-752

DRAWFORM REVISION: 10 OCTOBER 2014

FILE NAME: S:\1794\Active\179410203\VP-1044 PNSY Lifting Study\VP-1044 PNSY Lifting Study\02 CADD\08 Structural\FP2-16-752.dwg LAYOUT NAME: REPAIR DETAILS - SHEET 2 OF 2 PLOTTED: Friday, May 13, 2016 - 2:59pm USER: cgoodridge

DECK REPAIR SCHEDULE

REPAIR ID NO	DEFECT LOCATION		REPAIR		DEFECT
	BENT	PILE LINE	REPAIR AREA (SF)	REPAIR TYPE	
1001	D/E	A/B	2	A	SPALL
1002	H	A	16	B	DELAMINATION AT EJ
1003	M	D	2	A	DELAMINATION
1004	N	D/E	3	A	DELAMINATION
1005	N/O	F	2	A	DELAMINATION
1006	N	C/D	1	A	DELAMINATION
1007	P/Q	C/D	2	A	DELAMINATION
1008	Q	D/E	1	A	DELAMINATION
1009	R	B/C	1	A	DELAMINATION AT RAIL POCKET
1010	R	D	1	A	DELAMINATION
1011	S	D	1	A	DELAMINATION
1012	S/T	D/E	3	A	DELAMINATION/SPALL
1013	S/T	C/D	1	A	DELAMINATION
1014	T/U	C	2	A	DELAMINATION
1015	U/V	G	8	A	DELAMINATION
1016	V/W	F/G	6	A	SPALL AT RAIL POCKET
1017	V	D	1	A	DELAMINATION
1018	W	D	2	A	SPALL AT EJ
1019	1/2	B/C	7	A	SPALL/DELAMINATION AT RAIL POCKET
1020	1/2	D	12	B	SPALL
1021	1	F	3	A	SPALL
1022	1/2	E/F	2	A	SPALL AT RAIL POCKET
1023	2	G/H	2	A	DELAMINATION
1024	2/3	G/H	4	A	DELAMINATION
1025	2/3	F/G	3	A	SPALL AT RAIL POCKET
1026	2/3	D/E	3	A	DELAMINATION
1027	4	B/C	2	A	DELAMINATION
1028	5	E	2	A	SPALL
1029	5/6	E/F	1	A	SPALL
1030	6	C/D	1	A	SPALL AT RAIL POCKET
1031	6/7	D	1	A	SPALL
1032	7/8	H	2	A	DELAMINATION
1033	8	D	1	A	SPALL AT RAIL POCKET
1034	8	C/D	1	A	SPALL AT RAIL POCKET
1035	8	C/D	1	A	SPALL AT RAIL POCKET
1036	8/9	D	1	A	SPALL
1037	8/9	C	1	A	SPALL
1038	16/17	C	2	A	DELAMINATION AT RAIL POCKET
1039	9	F	1	A	SPALL
1040	9	C	1	A	SPALL
1041	10/11	D/E	3	A	SPALLS
1042	11	D	3	A	DELAMINATION
1043	11/12	G	2	A	SPALL AT TURNTABLE FROG
1044	11/12	F	2	A	SPALL AT TURNTABLE FROG
1045	11/12	E/F	1	A	SPALL
1046	11/12	E/F	1	A	SPALL
1047	12	D	3	A	SPALLS AT RAIL POCKET
1048	12	F/G	1	A	SPALL ADJACENT TO RAILROAD RAIL

DECK REPAIR SCHEDULE (CONT)

REPAIR ID NO	DEFECT LOCATION		REPAIR		DEFECT
	BENT	PILE LINE	REPAIR AREA (SF)	REPAIR TYPE	
1049	15/16	E	2	A	DELAMINATION
1050	16/17	H	3	A	SPALLS
1051	18	H	1	A	SPALL
1052	14	C	1	A	SPALL AT RAIL POCKET
1053	16	D	1	A	SPALL AT RAIL POCKET
1054	16/17	F/G	1	A	DELAMINATION AT RAIL POCKET
1055	18/19	D	3	A	SPALLS
1056	18/19	C/D	1	A	DELAMINATION AT RAIL POCKET
1057	20	F	1	A	DELAMINATION AT RAIL POCKET
1058	20/21	E	1	A	SPALL AT RAIL POCKET
1059	21	H	2	A	DELAMINATION
1060	21	G	1	A	SPALL
1061	21/22	D	2	A	SPALL AT RAIL POCKET
1062	20/21	D	2	A	SPALL AT RAIL POCKET
1063	22/23	E/F	1	A	DELAMINATION
1064	22/23	E/F	2	A	SPALL AT RAIL POCKET/DELAMINATION
1065	22/23	F	2	A	DELAMINATION/SPALL
1066	23	F/G	2	A	SPALL
1067	23	G/H	8	A	MULTIPLE SPALLS
1068	25	F	2	A	SPALL
1069	24/25	F/G	2	A	SPALL
1070	24/25	E/F	1	A	SPALL AT RAIL POCKET
1071	25/26	C	1	A	DELAMINATION
1072	28	H	2	A	DELAMINATION
1073	29	C	6	A	SPALL AT EXPANSION JOINT
1074	30/31	H	7	A	SPALL/DELAMINATION
1075	30/31	F	2	A	SPALL
1076	30/31	E/F	1	A	SPALL
1077	28/29	B/C	1	A	SPALL
1078	30/31	B/C	1	A	DELAMINATION AT RAIL POCKET
1079 *	31/32	–	4	–	SINKHOLE BEHIND EXIST WHARF*
1080	32	H	3	A	SPALL AT TURNTABLE FROG
1081	32/33	F	2	A	SPALL
1082	33	D/E	1	A	SPALL
1083	33/34	E/F	3	A	SPALL AT RAIL POCKET
1084	33/34	H	6	A	SPALL AT RAIL POCKET
1085	34/35	D/E	2	A	SPALL
1086	34/35	C/D	1	A	SPALL
1087	35	C	2	A	SPALL
1088	35/36	C	2	A	SPALL
1089	35/36	C	1	A	SPALL
1090	36	C	1	A	SPALL
1091	35/36	H	2	A	DELAMINATION
1092	35/36	H	4	A	DELAMINATION/SPALL
1093	35/36	H	5	A	DELAMINATION
1094	36/37	E/F	1	A	SPALL AT RAIL POCKET
1095	37/38	E/F	2	A	SPALL
1096	38/39	D/E	1	A	DELAMINATION

* FILL SINKHOLE W/GRAVEL FILL & PAVE. ASSUME 5 CY OF FILL AND 2 SY OF PAVEMENT.
** SEE DETAIL C1 ON S-517

DECK REPAIR SCHEDULE (CONT)

REPAIR ID NO	DEFECT LOCATION		REPAIR		DEFECT
	BENT	PILE LINE	REPAIR AREA (SF)	REPAIR TYPE	
1097	7–9	–	5	A	SPALLS BETWEEN RAILS R2 AND R3
1098	W to S	G	30	B	SPALL AT RAIL R1
1099	16–19	B/C	10	B	SPALL AT RAIL R4
1100	T/U	G/H	4	A1	SPALL
1101	T	C	2	B	SPALL
1102	U	A/B	5	B	SPALL
1103	1/2	G/H	4	A1	SPALL
1104	3	G/H	3	A1	SPALL
1105	4	G/H	4	A1	SPALL
1106	5	G/H	3	A1	SPALL
1107	6	G/H	1	A1	SPALL
1108	7	G/H	4	A1	SPALL
1109	8	G/H	2	B	SPALL
1110	9	G/H	2	A1	SPALL
1111	10/11	G/H	2	A1	SPALL
1112	13/14	–	3	B	SPALL
1113	14/15	G/H	3	B	SPALL
1114	14/15	G/H	6	B	SPALL
1115	16	G/H	1	A1	SPALL
1116	17	G/H	1	B	SPALL
1117	17/18	A/B	1	A1	SPALL
1118	19	G/H	2	B	SPALL
1119	21/22	B	1	A1	SPALL
1120	28/29	G/H	2	A1	SPALL
1200	LYK–12	A	**	N/A	SEE S-517, DETAIL C1

DECK REPAIR QUANTITIES - BERTH 11A

REPAIR TYPE	TOTAL AREA (SF)	BID QUANTITY (SF)
A	92	105
A1	27	30
B	77	90

DECK REPAIR QUANTITIES - BERTH 11B

REPAIR TYPE	TOTAL AREA (SF)	BID QUANTITY (SF)
A	47	55
A1	3	4
B	15	20

DECK REPAIR QUANTITIES - BERTH 11C

REPAIR TYPE	TOTAL AREAS (SF)	BID QUANTITY (SF)
A	62	75
A1	2	5
B	0	0

NOTES:

1. SEE SHEETS S-115 & S-116 FOR EXISTING DECK REPAIR PLAN.
2. SEE SHEET S-517 FOR REPAIR DETAILS.

GRAPHIC SCALE

CHECK GRAPHIC SCALE BEFORE USING

APPR | DATE | DESCRIPTION | MK

NAVFAC

SEAL

MN FST A JOINT VENTURE

A/E INFO

APPROVED: David W. Grunfeld
FOR COMMANDER NAVFAC

ACTIVITY: PER DOCUMENT FROM PNSY CODE 980, KITTERY ME

SATISFACTORY TO DATE: 05/09/16

DES: MN | DRW: FC | CHK: MN

PM/DM: NATHAN LIBBY

BRANCH MANAGER: NATHAN MAHER

FEAD/PM&E: AMIN BAHROUR

FIRE PROTECTION: N/A

DEPARTMENT OF THE NAVY
NAVAL FACILITIES ENGINEERING COMMAND
PUBLIC WORKS DEPARTMENT - MAINE
PORTSMOUTH NAVAL SHIPYARD

NAVAL FACILITIES ENGINEERING COMMAND ~ MID-ATLANTIC
NAVAL SHIPYARD - PORTSMOUTH, NH

KITTERY, MAINE

STRUCTURAL REPAIRS
AT BERTHS 11A, 11B AND 11C

EXISTING DECK REPAIR SCHEDULES

EPROJECT NO.: 1356489

CONSTR. CONTR. NO.
N40085-XX-C-XXXX

NAVFAC DRAWING NO.
12716113

SHEET 117 OF 144

S-601 | FP2-16-753

DRAWFORM REVISION: 10 OCTOBER 2014

FILE NAME: S:\1794\Active\1794102003\YP-104A PNSY Lifting Study\YP-104A PNSY Lifting Study\02 CADD\08 Structural\FP2-16-753.dwg LAYOUT NAME: EXISTING DECK REPAIR SCHEDULES PLOTTED: Friday, May 13, 2016 - 2:59pm USER: cgoodridge

BEAM REPAIR SCHEDULE

LOCATION				REPAIR		DEFECT
REPAIR ID NO	BENT	PILE LINE	BEAM ID OR PILE CAP	TYPE	QUANTITY	
2001	B2	–	PC	C1	30	SOUTH FACE OF BEAM CRACKED
2002	B	–	PC	C1	30	SOUTH FACE OF BEAM CRACKED
2003	B1	–	PC	C1	30	PREVIOUS REPAIR ON SOUTH FACE OF CAP DELAMINATED
2004	B1	–	PC	C1	30	PREVIOUS REPAIR ON NORTH FACE OF CAP DELAMINATED
2005	C	B	PC	D	5	WEST FACE OF CRACKED
2006	C	D/E	PC	D	5	CRACK IN BOTTOM
2007	D	C/D	PC	A1	2	BOTTOM SOUTH CORNER SPALLED
2008	D	A–D	PC	C1	30	CRACK IN BOTTOM
2009	D	A–D	PC	D	30	NORTH FACE CRACKED
2010	D/E	–	LFB	C1	8	WEST FACE OF BEAM CRACKED
2011	E	A–D	PC	C1	30	NORTH FACE OF BEAM CRACKED
2012	E/F	–	LFB	C1	8	WEST FACE OF BEAM CRACKED
2013	F	A–D	PC	C1	30	SOUTH FACE OF BEAM CRACKED
2014	F	A–D	PC	D	30	CRACK IN BOTTOM
2015	F	C/D	PC	C1	10	NORTH FACE OF BEAM CRACKED
2016	F/G	–	LFB	C1	10	WEST FACE OF BEAM CRACKED
2017	G	D	PC	A1	2	SOUTH FACE OF BEAM CRACKED
2018	G	C/D	PC	C1	3	2 SF DELAMINATION
2019	G	A–C	PC	D	20	CRACK IN BOTTOM
2020	J	–	LFB	A1	2	DELAMINATION ON WEST FACE
2021	K/J	–	R2	A1	4	DELAMINATION ON SOUTH FACE
2022	K	A	PC	A1	3	DELAMINATION ON EAST FACE
2023	K	A'	PC	A1	2	SPALL ON EAST FACE
2024	K–J	–	R3	D	10	CRACK IN SOUTH FACE
2025	K	C'	PC	A1	1	DELAMINATION ON BOTTOM
2026	K	C	PC	A1	2	DELAMINATION ON EAST FACE
2027	K	G	PC	A1	3	DELAMINATION ON WEST FACE
2028	K	E	PC	A1	2	DELAMINATION ON WEST FACE
2029	K	–	R2	A1	1	DELAMINATION ON SOUTH FACE
2030	L–K	–	R3	D	10	CRACK IN BOTTOM
2031	L–K	–	R4	D	10	CRACK IN BOTTOM
2032	L	–	LFB	A1	2	DELAMINATION ON SOUTH FACE
2033	–	–	–	–	–	NOT USED
2034	M	–	LFB	A1	1	DELAMINATION ON SOUTH FACE
2035	L	G/H	PC	A1	2	SPALL ON BOTTOM
2036	M	H/J	PC	A1	2	DELAMINATION ON WEST FACE
2037	M	F/G	PC	A1	2	DELAMINATION ON BOTTOM
2038	N/M	–	R3	C1	9	NORTH FACE OF BEAM CRACKED
2039	N/M	–	R3	C1	9	SOUTH FACE OF BEAM CRACKED
2040	N/M	–	R4	C1	9	NORTH FACE OF BEAM CRACKED
2041	N/M	–	R4	C1	9	SOUTH FACE OF BEAM CRACKED
2042	N/M	–	WFB	C1	9	NORTH FACE OF BEAM CRACKED
2043	N	G–J	PC	A1	12	DELAMINATION ON WEST FACE
2044	O	G	PC	A1	5	DELAMINATION ON EAST FACE
2045	O	D/E	PC	A1	2	DELAMINATION ON BOTTOM

BEAM REPAIR SCHEDULE (CONT)

LOCATION				REPAIR		DEFECT
REPAIR ID NO	BENT	PILE LINE	BEAM ID OR PILE CAP	TYPE	QUANTITY	
2046	O/P	–	LFB	A1	1	DELAMINATION ON SOUTH FACE
2047	P	E/F	PC	A1	3	SPALL ON BOTTOM
2048	P	C–E	PC	C1	13	CRACK IN BOTTOM
2049	O/P	–	R3	C1	9	SOUTH FACE OF BEAM CRACKED
2050	O	B/C	PC	B1	1	SPALL WITH REBAR ON BOTTOM
2051	P	B/C	PC	B1	1	SPALL WITH REBAR ON BOTTOM
2052	P	C/D	PC	B1	4	SPALL WITH REBAR ON BOTTOM
2053	Q/P	–	R3	C1	13	NORTH FACE OF BEAM CRACKED
2054	Q/P	–	R4	C1	13	SOUTH FACE OF BEAM CRACKED
2055	P	B/C	PC	B1	2	SPALL AT BOTTOM WEST CORNER
2056	Q	D/E	PC	B1	1	SPALL WITH EXPOSED REBAR ON BOTTOM
2057	R	G/H	PC	A1	2	DELAMINATION ON BOTTOM
2058	R	F/G	PC	A1	1	DELAMINATION ON BOTTOM
2059	S/R	H	LFB	A1	4	SPALL ON BOTTOM
2060	R	G/H	PC	A1	2	DELAMINATION ON WEST FACE
2061	S	F/G	PC	A1	2	DELAMINATION ON WEST FACE
2062	S	F	PC	A1	4	DELAMINATION ON EAST FACE
2063	S	D/E	PC	A1	2	DELAMINATION ON EAST FACE
2064	S	B	PC	B1	4	SPALL WITH REBAR AT UTILITY
2065	S/T	–	LFB	A1	10	DELAMATION WITH SPALLING ON BOTTOM
2066	T	G	PC	A1	2	DELAMINATION ON EAST FACE
2067	T	F	PC	B1	2	SPALL WITH EXPOSED REBAR ON BOTTOM
2068	T	D/E	PC	A1	1	DELAMINATION ON BOTTOM
2069	T	–	LFB	A1	1	DELAMINATION ON SOUTH FACE
2070	T	G/H	PC	B1	2	DELAMINATION ON WEST FACE
2071	T/U	–	R2	D	13	CRACK IN BOTTOM
2072	T/U	–	R2	A1	2	DELAMINATION ON BOTTOM
2073	U	F	PC	A1	2	DELAMINATION ON EAST FACE
2074	U	–	R3	C1	13	NORTH FACE OF BEAM CRACKED AT PREVIOUS REPAIR
2075	T/U	–	R3	D	13	CRACK IN BOTTOM
2076	–	–	–	–	–	NOT USED
2077	T/U	–	R4	D	13	CRACK IN BOTTOM
2078	–	–	–	–	–	NOT USED
2079	U	D/E	PC	B1	1	SPALL WITH EXPOSED REBAR ON BOTTOM
2080	U	C/D	PC	B1	2	SPALL WITH EXPOSED REBAR ON BOTTOM
2081	U	B/C	PC	A1	2	DELAMINATION ON BOTTOM
2082	U	A/B	PC	A1	2	DELAMINATION ON BOTTOM
2083	T/U	–	WFB	A1	5	SOUTH FACE OF BEAM SPALLED
2084	U/V	–	LFB	A1	3	SPALL ON BOTTOM
2085	U/V	–	LFB	A1	1	DELAMINATION ON SOUTH FACE
2086	U	G/H	PC	B1	4	SPALL WITH EXPOSED REBAR ON WEST FACE
2087	U/V	–	R2	C1	23	SOUTH FACE OF BEAM CRACKED
2088	V	G/H	PC	A1	2	SPALL ON BOTTOM
2089	V	F/G	PC	A1	2	DELAMINATION ON EAST FACE
2090	V	E/F	PC	A1	2	SPALL ON BOTTOM

NOTES:

1. SEE SHEETS S–117, S–118, S–119 & S–120 FOR EXISTING BEAM REPAIR PLANS.
2. SEE SHEET S–517 FOR REPAIR DETAILS.
3. SEE SHEET S–606 FOR QUANTITY.

GRAPHIC SCALE

CHECK GRAPHIC SCALE BEFORE USING

MK	DESCRIPTION	DATE	APPR

NAVFAC

COMMONWEALTH OF MASSACHUSETTS — MARK A. NICOLAZZO — No. 51724 — REGISTERED PROFESSIONAL ENGINEER

SEAL

MN FST A JOINT VENTURE

A/E INFO

APPROVED: David W. Thurfield
FOR COMMANDER NAVFAC

ACTIVITY: PER DOCUMENT FROM PNSY CODE 980, KITTERY ME

SATISFACTORY TO DATE: 05/09/14

DES: MN | DRW: FC | CHK: MN

PM/DM: NATHAN LIBBY

BRANCH MANAGER: NATHAN MAHER

FEAD/PM&E: AMIN BAHROUR

FIRE PROTECTION: N/A

DEPARTMENT OF THE NAVY
NAVAL FACILITIES ENGINEERING COMMAND
PUBLIC WORKS DEPARTMENT – MAINE
PORTSMOUTH NAVAL SHIPYARD

NAVAL FACILITIES ENGINEERING COMMAND – MID-ATLANTIC
NAVAL SHIPYARD – PORTSMOUTH, NH
KITTERY, MAINE

STRUCTURAL REPAIRS AT BERTHS 11A, 11B AND 11C

EXISTING BEAM REPAIR SCHEDULE – SHEET 1 OF 5

EPROJECT NO.: 1356489

CONSTR. CONTR. NO.: N40085–XX–C–XXXX

NAVFAC DRAWING NO.: 12716114

SHEET 118 OF 144

S-602 | FP2-16-754

DRAWFORM REVISION: 10 OCTOBER 2014

FILE NAME: S:\1794\Active\179410203\V\TP-104A PNSY Lifting Study\TP-104A PNSY Lifting Study\02 CAD\08 Structural\FP2-16-754.dwg LAYOUT NAME: EXISTING BEAM REPAIR SCHEDULE – SHEET 1 OF 5 PLOTTED: Friday, May 13, 2016 – 2:59pm USER: cgoodridge

BEAM REPAIR SCHEDULE (CONT)

LOCATION				REPAIR		DEFECT
REPAIR ID NO	BENT	PILE LINE	BEAM ID OR PILE CAP	TYPE	QUANTITY	
2091	V	D/E	PC	A1	2	SPALL WITH EXPOSED REBAR ON BOTTOM
2092	V	C/D	PC	A1	2	SPALL ON BOTTOM
2093	V	B/C	PC	A1	2	SPALL ON BOTTOM
2094	V	A/B	PC	A1	1	SPALL ON BOTTOM
2095	V/W	–	LFB	A1	5	DELAMINATION ON SOUTH FACE
2096	V/W	–	R2	C1	23	DELAMINATION ON BOTTOM
2097	V	B	PC	A1	1	DELAMINATION ON WEST FACE
2098	W	B	PC	A1	1	DELAMINATION ON EAST FACE
2099	W	F/G	PC	B1	3	SPALL WITH EXPOSED REBAR ON EAST FACE
2100	1/2	–	LFB	C1	23	SOUTH FACE OF BEAM CRACKED
2101	2	G/H	PC	A1	3	DELAMINATION ON EAST FACE
2102	1/2	–	R1	C1	23	SOUTH FACE OF BEAM CRACKED
2103	1/2	–	R2	C1	23	NORTH FACE OF BEAM CRACKED
2104	1/2	–	R2	D	10	BOTTOM OF BEAM CRACKED
2105	2	D/E	PC	A1	10	DELAMINATION ON EAST FACE
2106	1/2	–	R3	D	4	BOTTOM OF BEAM IS CRACKED LONGITUDINALLY
2107	1/2	–	R3	C1	10	SOUTH FACE OF BEAM CRACKED
2108	1/2	–	R3	C1	10	SOUTH FACE OF BEAM CRACKED
2109	1/2	–	WFB	A1	5	SPALLING ON WATERSIDE FACE OF BEAM
2110	2	A	PC	B1	4	SPALLING WITH EXPOSED REBAR ON WATERSIDE FACE OF PILE CAP
2111	2/3	–	LFB	C1	6	SOUTH FACE OF BEAM CRACKED
2112	2/3	–	R1	C1	6	SOUTH FACE OF BEAM CRACKED
2113	2/3	–	R1	C1	6	NORTH FACE OF BEAM CRACKED
2114	2/3	–	R2	C1	6	NORTH FACE OF BEAM CRACKED
2115	2	D/E	PC	A1	4	DELAMINATION ON WEST FACE
2116	2/3	–	R3	D	23	CRACK IN BOTTOM
2117	2/3	–	R4	D	23	CRACK IN BOTTOM
2118	3	A	PC	A1	4	DELAMINATION ON SOUTH FACE
2119	3/4	–	LFB	C1	8	SOUTH FACE OF BEAM CRACKED
2120	4	G/H	PC	A1	5	DELAMINATION ON SOUTH FACE
2121	3/4	–	R2	C1	3	CRACK ON SOUTH FACE
2122	3/4	–	R2	A1/D	3/23	BOTTOM OF BEAM CRACKED WITH 3 SF
2123	3	D/E	PC	B1	2	SPALL ON WEST FACE
2124	3/4	–	R3	D	23	CRACK IN BOTTOM
2125	3/4	–	R4	D	23	CRACK IN BOTTOM
2126	3/4	–	R4	C1	23	SOUTH FACE OF BEAM CRACKED
2127	4	B/C	PC	A1	2	SPALL ON BOTTOM
2128	4/5	–	R3	D	23	CRACK IN BOTTOM
2129	4	B	–	B1	2	DUCT BANK HEAVY SPALLING WITH EXPOSED REBAR
2130	4/5	–	WFB	C1	23	CRACKS AND DELAMINATION ON OLD REPAIR LOCATION ON BOTTOM OF BEAM FOR THE ENTIRE LENGTH
2131	S	F/G	PC	A1	2	DELAMINATION ON WEST FACE
2132	S	E/F	PC	A1	2	DELAMINATION ON WEST FACE
2133	–	–	–	–	–	NOT USED
2134	4/5	–	LFB	C1	23	SOUTH FACE OF BEAM CRACKED
2135	4/5	–	R2	D	23	BOTTOM OF BEAM IS CRACKED LONGITUDINALLY

BEAM REPAIR SCHEDULE (CONT)

LOCATION				REPAIR		DEFECT
REPAIR ID NO	BENT	PILE LINE	BEAM ID OR PILE CAP	TYPE	QUANTITY	
2136	5/6	–	R2	A1	2	DELAMINATION ON BOTTOM
2137	5/6	–	R2	C1	4	NORTH FACE OF BEAM CRACKED
2138	6/7	–	R1	A1	1	DELAMINATION ON BOTTOM
2139	6/7	–	R1	C1	3	NORTH FACE OF BEAM CRACKED
2140	6/7	–	R1	C1	23	DELAMINATION ON SOUTH FACE
2141	6/7	–	R2	C1	23	NORTH FACE OF BEAM CRACKED
2142	6/7	–	R2	C1	23	SOUTH FACE OF BEAM CRACKED
2143	6/7	–	R3	C1	4	NORTH FACE OF BEAM CRACKED
2144	5	F	PC	A1	1	SPALL ON EAST FACE
2145	7/8	–	LFB	C1	23	SOUTH FACE OF BEAM CRACKED
2146	7/8	–	R1	A1	2	DELAMINATION ON BOTTOM
2147	7/8	–	R2	D	23	CRACK IN BOTTOM
2148	7/8	–	R3	C1	23	NORTH FACE OF BEAM CRACKED
2149	7/8	–	R3	D	23	CRACK ON BOTTOM OF BEAM
2150	–	–	–	–	–	NOT USED
2151	–	–	–	–	–	NOT USED
2152	9	D–F	PC	C1	3	DELAMINATION ON EAST SIDE OF PILE CAP
2153	8/9	–	R3	D	6	CRACK IN BOTTOM
2154	8/9	–	R4	C1	10	SOUTH FACE OF BEAM CRACKED
2155	9	A/B	PC	C1	5	EAST FACE OF CAP CRACKED
2156	9/10	–	LFB	A1	2	DELAMINATION ON SOUTH FACE
2157	9/10	D/E	–	C1	5	WEST FACE OF INTERMEDIATE BEAM CRACKED
2158	9/10	–	R4	C1	10	CRACK ON BOTTOM
2159	9/10	–	R4	D	10	SOUTH FACE OF BEAM CRACKED
2160	9/10	–	WFB	B1	20	DELAMINATION ON BOTTOM
2161	S/T	–	R4	D	13	CRACK IN BOTTOM
2162	W	A–E	PC	A1	4	DELAMINATION ON BOTTOM
2163	1/2	–	R2	D	10	SOUTH FACE OF BEAM CRACKED AT PREVIOUS REPAIR
2164	10/11	–	R1	C1	23	NORTH FACE OF BEAM CRACKED
2165	10/11	–	R2	C1	3	NORTH FACE OF BEAM CRACKED
2166	10/11	–	R2	A1	3	DELAMINATION ON NORTH FACE
2167	10/11	–	R2	A1	1	SPALL ON BOTTOM
2168	10/11	–	R2/R3	C1	5	TRANSVERSE BEAM CRACKED ON BOTH FACES
2169	10/11	–	R2/R3	C1	3	TRANSVERSE BEAM CRACKED ON WEST FACE
2170	10/11	–	R4	D	23	CRACK IN BOTTOM
2171	10/11	–	R4	C1	10	SOUTH FACE OF BEAM CRACKED
2172	11	A	PC	B1	3	SOUTH FACE SPALLED WITH REBAR EXPOSED
2173	11	G/H	PC	A1	1	WEST BOTTOM EDGE SPALLED
2174	11/12	–	LSB	B1	4	BOTTOM EDGE SPALLED WITH REBAR EXPOSED
2175	11/12	–	R3	D	23	CRACK IN BOTTOM
2176	11/12	–	R4	A1	2	DELAMINATION ON BOTTOM OF BEAM
2177	11/12	–	R4	C1	10	SOUTH FACE OF BEAM CRACKED
2178	11/12	–	WSB	A1	4	NORTH FACE BOTTOM EDGE LIGHT SPALLING
2179	11/12	A/B	PC	A1	10	DELAMINATION ON WEST FACE
2180	12	D/E	PC	A1	4	DELAMINATION ON EAST FACE

NOTES:

1. SEE SHEETS S–117, S–118, S–119 & S–120 FOR EXISTING BEAM REPAIR PLANS.
2. SEE SHEET S–517 FOR REPAIR DETAILS.
3. SEE SHEET S–606 FOR QUANTITY SUMMARY.

GRAPHIC SCALE

CHECK GRAPHIC SCALE BEFORE USING

APPR | DATE | DESCRIPTION | MJS | STM

NAVFAC

SEAL

MN FST A JOINT VENTURE

A/E INFO

APPROVED
David W. Thornfield
FOR COMMANDER NAVFAC

ACTIVITY:
PER DOCUMENT FROM PNSY
CODE 980, KITTERY ME

SATISFACTORY TO DATE: 05/09/14

DES: MN | DRW: FC | CHK: MN

PM/DM: NATHAN LIBBY

BRANCH MANAGER: NATHAN MAHER

FEAD/PM&E: AMIN BAHROUR

FIRE PROTECTION: N/A

DEPARTMENT OF THE NAVY
NAVAL FACILITIES ENGINEERING COMMAND
PUBLIC WORKS DEPARTMENT – MAINE
PORTSMOUTH NAVAL SHIPYARD

NAVAL FACILITIES ENGINEERING COMMAND – MID-ATLANTIC
NAVAL SHIPYARD – PORTSMOUTH, NH

STRUCTURAL REPAIRS AT BERTHS 11A, 11B AND 11C

KITTERY, MAINE

EXISTING BEAM REPAIR SCHEDULE – SHEET 2 OF 5

EPROJECT NO.: 1356489

CONSTR. CONTR. NO.
N40085–XX–C–XXXX

NAVFAC DRAWING NO.
12716115

SHEET 119 OF 144

S-603 | FP2-16-755

DRAWFORM REVISION: 10 OCTOBER 2014

FILE NAME: S:\1794\Active\179410203\1\TP-104A PNSY Lifting Study\TP-104A PNSY Lifting Study\02 CAD\08 Structural\FP2-16-755.dwg LAYOUT NAME: EXISTING BEAM REPAIR SCHEDULE – SHEET 2 OF 5 PLOTTED: Friday, May 13, 2016 – 2:59pm USER: cgoodridge

BEAM REPAIR SCHEDULE (CONT)

LOCATION				REPAIR		DEFECT
REPAIR ID NO	BENT	PILE LINE	BEAM ID OR PILE CAP	TYPE	QUANTITY	
2181	–	–	–	–	–	NOT USED
2182	12/13	–	R2	A1	2	DELAMINATION ON NORTH FACE
2183	12/13	–	R2	D	23	CRACK IN BOTTOM
2184	12/13	–	R3	D	23	CRACK IN BOTTOM
2185	12/13	–	R4	A1	4	SPALL ON SOUTH FACE
2186	12/13	–	WSB	C1	23	SOUTH FACE CRACKED
2187	13	G	PC	A1	1	DELAMINATION ON EAST FACE
2188	13/14	–	R1	C1	23	NORTH FACE CRACKED
2189	13/14	–	R1	A1	1	DELAMINATION ON BOTTOM
2190	14	G/H	PC	A1	2	DELAMINATION ON EAST FACE
2191	14	F	PC	A1	1	DELAMINATION ON EAST FACE
2192	13/14	–	R2	D	23	CRACK IN BOTTOM
2193	14	E	PC	A1	3	DELAMINATION ON WEST FACE
2194	13	A	PC	D	4	CRACK ON SOUTH FACE OF PILE CAP
2195	14/15	–	LFB	C1	23	SOUTH FACE OF BEAM CRACKED
2196	14/15	–	R1	C1	23	NORTH FACE OF BEAM CRACKED
2197	14/15	–	R1	C1	23	SOUTH FACE OF BEAM CRACKED
2198	14/15	–	R2	D	23	CRACK IN BOTTOM
2199	15	D/E	PC	A1	5	DELAMINATION ON EAST FACE
2200	14/15	–	R3	D	10	CRACK IN BOTTOM
2201	15	F/G	PC	B1	1	SPALL ON BOTTOM
2202	15	E/F	PC	B1	1	SPALL ON BOTTOM
2203	15	D/E	PC	B1	1	SPALL ON BOTTOM
2204	15/16	–	LFB	C1	23	SOUTH FACE OF BEAM CRACKED
2205	15/16	–	R1	C1	23	NORTH FACE OF BEAM CRACKED
2206	15	F	PC	A1	2	DELAMINATION ON WEST FACE
2207	15/16	–	R2	D	10	CRACK IN BOTTOM
2208	15/16	–	R4	D	5	CRACK IN BOTTOM
2209	16	B–C	PC	A1	2	DELAMINATION ON EAST FACE OF PILE CAP
2210	15	D/E	PC	B1	2	DELAMINATION ON WEST FACE
2211	–	–	–	–	–	NOT USED
2212	16/17	–	LFB	C1	23	SOUTH FACE OF BEAM CRACKED
2213	16/17	–	R1	A1	3	DELAMINATION ON NORTH FACE
2214	16	D/E	PC	B1	2	SPALL WITH REBAR ON BOTTOM
2215	16/17	–	R4	C1	10	SOUTH FACE OF BEAM CRACKED
2216	17/18	–	LFB	C1	10	SOUTH FACE OF BEAM CRACKED
2217	17	G/H	PC	A1	2	DELAMINATION ON WEST FACE
2218	17/18	–	R1	C1	6	SOUTH FACE OF BEAM CRACKED
2219	17/18	–	R2	A1/D	5/23	CRACK IN BOTTOM
2220	17/18	–	R2	A1	2	DELAMINATION ON NORTH FACE
2221	17/18	–	R3	A1	10	DELAMINATION ON NORTH FACE
2222	17/18	–	R4	A1	10	DELAMINATION ON SOUTH FACE
2223	18/19	–	R1	C1	23	NORTH FACE OF BEAM CRACKED
2224	18/19	–	R1	C1	10	SOUTH FACE OF BEAM CRACKED
2225	18/19	–	R2	A1	4	DELAMINATION ON NORTH FACE

BEAM REPAIR SCHEDULE (CONT)

LOCATION				REPAIR		DEFECT
REPAIR ID NO	BENT	PILE LINE	BEAM ID OR PILE CAP	TYPE	QUANTITY	
2226	18/19	–	R3	D	10	LONGITUDINAL CRACK IN BOTTOM
2227	18/19	–	R4	D	10	LONGITUDINAL CRACK IN BOTTOM
2228	19	C/D	PC	B1	4	SPALL WITH EXPOSED REBAR ON BOTTOM
2229	19/20	–	LFB	C1	23	SOUTH FACE OF BEAM CRACKED
2230	19	F	PC	A1	2	DELAMINATION ON WEST FACE
2231	19/20	–	R2	C1	4	SOUTH FACE OF BEAM CRACKED
2232	19	D/E	PC	A1	4	DELAMINATION ON WEST FACE
2233	19/20	–	R3	B1/D	4/23	LONGITUDINAL CRACK IN BOTTOM WITH SPALL
2234	19/20	–	R3	D	23	SOUTH FACE OF BEAM CRACKED
2235	20/21	–	R1	A1	2	DELAMINATION ON BOTTOM
2236	20/21	–	R1	A1	2	DELAMINATION ON SOUTH FACE
2237	20/21	–	R2	A1	4	DELAMINATION ON BOTTOM
2238	21	E	PC	A1	4	DELAMINATION OF EAST FACE
2239	20/21	–	R2	A1	3	DELAMINATION ON SOUTH FACE
2240	20	D	PC	A1	6	DELAMINATION ON WEST FACE
2241	20/21	–	R4	A1	4	DELAMINATION ON SOUTH FACE
2242	21	G/H	PC	A1	4	DELAMINATION ON WEST FACE
2243	21/22	–	LFB	C1	23	SOUTH FACE OF BEAM CRACKED
2244	21/22	–	R2	A1	6	DELAMINATION ON NORTH FACE
2245	21	F	PC	A1	3	DELAMINATION OF WEST FACE
2246	21/22	–	R2	A1	2	DELAMINATION ON BOTTOM
2247	22	D/E	PC	A1	3	SPALL ON BOTTOM
2248	21/22	–	R4	A1	10	DELAMINATION ON SOUTH FACE
2249	22/23	–	R1	C1	23	SOUTH FACE OF BEAM CRACKED
2250	22/23	D/E	R2/R3	A1	3	DELAMINATION ON BOTTOM OF INTERMEDIATE BEAM
2251	23	D/E	PC	A1	6	DELAMINATION ON EAST SIDE
2252	23/24	–	LFB	C1	23	SOUTH FACE OF BEAM CRACKED
2253	23/24	–	R1	A1	2	DELAMINATION ON NORTH FACE
2254	23/24	–	R1	A1	3	DELAMINATION ON NORTH FACE
2255	23/24	–	R1	A1	2	DELAMINATION ON BOTTOM
2256	23/24	–	R1	C1	23	SOUTH FACE OF BEAM CRACKED
2257	23/24	–	R2	C1	10	NORTH FACE OF BEAM CRACKED
2258	23/24	–	R2	A1/D	10/23	CRACK IN BOTTOM OF BEAM WITH DELAMINATION
2259	23	D/E	PC	A1	3	DELAMINATION ON WEST FACE
2260	23/24	–	R3	C1	10	NORTH FACE OF BEAM CRACKED
2261	23/24	–	R4	A1	8	DELAMINATION ON SOUTH FACE OF BEAM, ADJACENT TO BENT 24
2262	23/24	–	R4	A1	5	SPALL ON SOUTH FACE OF BEAM, ADJACENT TO BENT 23
2263	24/25	–	LFB	C1	23	SOUTH FACE OF BEAM CRACKED
2264	25	G/H	PC	A1	5	DELAMINATION ON EAST FACE OF PILE CAP
2265	24/25	–	R1	C1	10	NORTH FACE OF BEAM CRACKED
2266	24/25	–	R2	A1/D	10/23	LONGITUDINAL CRACK IN BOTTOM OF BEAM PLUS DELAMINATION
2267	24/25	–	R3	A1	46	DELAMINATION ON BOTTOM OF BEAM
2268	24/25	–	R4	A1	10	DELAMINATION ON BOTTOM OF BEAM
2269	24/25	–	R4	D	12	LONGITUDINAL CRACK IN BOTTOM OF BEAM
2270	24	D/E	PC	B1	4	DELAMINATION ON BOTTOM OF CAP

NOTES:

1. SEE SHEETS S–117, S–118, S–119 & S–120 FOR EXISTING BEAM REPAIR PLANS.
2. SEE SHEET S–517 FOR REPAIR DETAILS.
3. SEE SHEET S–606 FOR QUANTITY SUMMARY.

GRAPHIC SCALE

CHECK GRAPHIC SCALE BEFORE USING

APPR | DATE | DESCRIPTION | MJS

NAVFAC

COMMONWEALTH OF MASSACHUSETTS — MARK NICOLAZZO — No. 51724 — REGISTERED PROFESSIONAL ENGINEER — CIVIL

SEAL

MN FST A JOINT VENTURE

A/E INFO

APPROVED (Name & Title): David W. Thurgfield
FOR COMMANDER NAVFAC

ACTIVITY:
PER DOCUMENT FROM PNSY
CODE 980, KITTERY ME

SATISFACTORY TO — DATE: 05/09/14

DES: MN | DRW: FC | CHK: MN

PM/DM: NATHAN LIBBY
BRANCH MANAGER: NATHAN MAHER
FEAD/PM&E: AMIN BAHROUR
FIRE PROTECTION: N/A

DEPARTMENT OF THE NAVY
NAVAL FACILITIES ENGINEERING COMMAND
PUBLIC WORKS DEPARTMENT – MAINE
PORTSMOUTH NAVAL SHIPYARD

NAVAL FACILITIES ENGINEERING COMMAND – MID-ATLANTIC
NAVAL SHIPYARD – PORTSMOUTH, NH
KITTERY, MAINE

STRUCTURAL REPAIRS AT BERTHS 11A, 11B AND 11C

EXISTING BEAM REPAIR SCHEDULE – SHEET 3 OF 5

EPROJECT NO.: 1356489

CONSTR. CONTR. NO.: N40085–XX–C–XXXX

NAVFAC DRAWING NO.: 12716116

SHEET 120 OF 144

S-604 | FP2-16-756

DRAWFORM REVISION: 10 OCTOBER 2014

FILE NAME: S:\1794\Active\179410203\1\TP-104A PNSY Lifting Study\TP-104A PNSY Lifting Study\02 CAD\08 Structural\FP2-16-756.dwg LAYOUT NAME: EXISTING BEAM REPAIR SCHEDULE – SHEET 3 OF 5 PLOTTED: Friday, May 13, 2016 – 3:00pm USER: cgoodridge

BEAM REPAIR SCHEDULE (CONT)

LOCATION				REPAIR		DEFECT
REPAIR ID NO	BENT	PILE LINE	BEAM ID OR PILE CAP	TYPE	QUANTITY	
2271	25/26	–	LFB	C1	23	SOUTH FACE OF BEAM CRACKED
2272	25/26	–	R1	C1	23	NORTH FACE OF BEAM CRACKED
2273	26	F/G	PC	C1	5	EAST FACE OF PILE CAP CRACKED
2274	26	F	PC	A1	2	DELAMINATION ON EAST FACE
2275	25/26	–	R2	C1	23	NORTH FACE OF BEAM CRACKED
2276	26	D/E	PC	A1	5	DELAMINATION ON EAST FACE
2277	25/26	–	R3	A1	15	DELAMINATION ON BOTTOM OF BEAM
2278	25/26	–	R3	A1	10	SPALLING ON BOTTOM OF BEAM
2279	26/27	–	LFB	C1	23	SOUTH FACE OF BEAM CRACKED
2280	27	G/H	PC	A1	3	DELAMINATION ON EAST FACE
2281	26/27	–	R1	C1	23	NORTH FACE OF BEAM CRACKED
2282	26/27	–	R2	A1	40	BOTTOM OF BEAM
2283	27/28	–	LFB	C1	23	SOUTH FACE OF BEAM CRACKED
2284	28	G/H	PC	A1	5	DELAMINATION ON EAST FACE
2285	27	F	PC	A1	2	DELAMINATION ON WEST FACE
2286	27/28	–	R2	C1	5	NORTH FACE OF BEAM CRACKED, ON EAST SIDE OF BEAM
2287	27/28	–	R2	D	10	LONGITUDINAL CRACK IN BOTTOM OF BEAM
2288	28	D	PC	A1	5	DELAMINATION ON EAST FACE
2289	27/28	–	R3	C1	23	NORTH FACE OF BEAM CRACKED
2290	27/28	–	R3	A1	10	DELAMINATION ON BOTTOM OF BEAM
2291	27/28	–	R4	A1	10	DELAMINATION ON BOTTOM OF BEAM
2292	27/28	–	WFB	C1	20	BOTTOM OF BEAM SPALLED
2293	28/29	–	LFB	C1	23	SOUTH FACE OF BEAM CRACKED
2294	28/29	–	R1	C1	23	SOUTH FACE OF BEAM CRACKED
2295	–	–	–	–	–	NOT USED
2296	28/29	–	R2	C1	23	SOUTH FACE OF BEAM CRACKED
2297	29	F/G	PC	B1	3	BOTTOM OF PILE CAP
2298	30/31	–	WFB	A1	1	BOTTOM OF BEAM
2299	32	E/F	PC	A1	1	BOTTOM
2300	32	D/E	PC	A1	2	DELAMINATION ON EAST FACE
2301	33	F	PC	A1	2	DELAMINATION ON EAST FACE
2302	33	D/E	PC	D	3	VERTICAL CRACK IN EAST FACE
2303	32/33	–	R2	A1	1	BOTTOM OF BEAM
2304	32/33	–	R2/R3	C1	8	TRANSVERSE BEAM CRACKED ON EAST FACE
2305	32/33	–	R2/R3	C1	6	TRANSVERSE BEAM CRACKED ON WEST FACE
2306	33/34	–	R1	C1	23	SOUTH FACE OF BEAM CRACKED
2307	33/34	–	R2	A1	3	SPALL NORTH FACE OF BEAM
2308	33/34	–	R2	C1	3	SOUTH FACE OF BEAM CRACKED
2309	33/34	–	R2/R3	C1	5	TRANSVERSE BEAM CRACKED ON WEST FACE
2310	33/34	–	R2/R3	C1	5	TRANSVERSE BEAM CRACKED ON WEST FACE
2311	33/34	–	R4	C1	5	SOUTH FACE OF BEAM CRACKED
2312	34/35	–	LFB	C1	23	SOUTH FACE OF BEAM CRACKED
2313	34/35	–	R1	C1	23	NORTH FACE OF BEAM CRACKED
2314	34/35	–	R1	C1	3	SOUTH FACE OF BEAM CRACKED
2315	34/35	–	R2	A1	1	DELAMINATION ON BOTTOM OF BEAM

BEAM REPAIR SCHEDULE (CONT)

LOCATION				REPAIR		DEFECT
REPAIR ID NO	BENT	PILE LINE	BEAM ID OR PILE CAP	TYPE	QUANTITY	
2316	34/35	–	R2	A1	1	DELAMINATION ON BOTTOM OF BEAM
2317	35	D/E	PC	A1	6	DELAMINATION ON EAST FACE
2318	34/35	–	R2/R3	C1	20	4 TRANSVERSE BEAMS CRACKED ON EACH FACE
2319	34/35	–	R4	C1	3	NORTH FACE OF BEAM CRACKED
2320	34/35	–	R4	C1	12	SOUTH FACE OF BEAM CRACKED
2321	34	A/B	PC	A1	3	DELAMINATION ON WEST FACE
2322	34/35	–	WFB	C1	23	NORTH FACE OF BEAM CRACKED
2323	35	F/G	PC	A1	2	SPALL ON BOTTOM
2324	35/36	–	LFB	C1	23	SOUTH FACE OF BEAM CRACKED
2325	35	F/G	PC	B1	5	WEST BOTTOM EDGE SPALLED WITH REBAR EXPOSED
2326	35/36	–	R2	C1	5	NORTH FACE OF BEAM CRACKED
2327	35/36	–	R2	C1	23	SOUTH FACE OF BEAM CRACKED
2328	36	E/F	PC	B1	4	SPALL ON BOTTOM
2329	35/36	–	R2/R3	C1	8	TRANSVERSE BEAM CRACKED ON WEST FACE
2330	35/36	–	R2/R3	C1	8	TRANSVERSE BEAM CRACKED ON EAST FACE
2331	35	D/E	PC	A1	10	DELAMINATION ON WEST FACE
2332	36	B	PC	B1	4	SPALL AT UTILITY OPENING
2333	36/37	–	LFB	C1	23	SOUTH FACE OF BEAM CRACKED
2334	37	F	PC	A1	5	DELAMINATION ON EAST FACE
2335	36/37	–	R2	C1	23	NORTH FACE OF BEAM CRACKED
2336	36	F	PC	A1	2	DELAMINATION ON WEST FACE
2337	36/37	–	R2	C1	23	SOUTH FACE OF BEAM CRACKED
2338	36/37	–	R3	C1	10	SOUTH FACE OF BEAM CRACKED
2339	36/37	–	R4	A1	4	DELAMINATION ON BOTTOM OF BEAM
2340	37	C	PC	A1	12	DELAMINATION ON EAST FACE
2341	37	A/B	PC	A1	4	DELAMINATION ON EAST FACE
2342	36/37	–	WFB	C1	23	NORTH FACE OF BEAM CRACKED
2343	37	A/B	PC	D	5	EAST FACE OF PILE CAP CRACKED HORIZONTALLY
2344	37/38	–	LFB	C1	23	SOUTH FACE OF BEAM CRACKED
2345	37/38	–	R1	A1	4	DELAMINATION ON BOTTOM OF BEAM
2346	37	F/G	PC	B1	3	WEST BOTTOM EDGE SPALLED
2347	37/38	–	R1	C1	23	SOUTH FACE OF BEAM CRACKED
2348	37/38	–	R2	A1	4	DELAMINATION ON NORTH FACE
2349	37/38	–	R2	A1	10	DELAMINATION ON SOUTH FACE, ADJACENT TO BENT 37
2350	37	D/E	PC	A1/B1	15/3	WEST BOTTOM EDGE SPALLED WITH DELAMINATION ON WEST FACE
2351	37/38	–	WFB	A1	5	SPALL
2352	38/39	–	LFB	C1	23	SOUTH FACE OF BEAM CRACKED FULL LENGTH
2353	39	F	PC	A1	4	DELAMINATION ON EAST FACE
2354	38	F	PC	B1	10	WEST BOTTOM EDGE SPALLED WITH REBAR EXPOSED
2355	38/39	–	R2	C1	23	NORTH FACE OF BEAM CRACKED
2356	38/39	–	R2	A1	2	2 SF DELAMINATION ON BOTTOM OF BEAM
2357	38	D/E	PC	A1	10	DELAMINATION ON WEST FACE
2358	39	D/E	PC	A1	12	DELAMINATION ON EAST FACE
2359	39/A'	–	WFB	C1	23	SOUTH FACE OF BEAM CRACKED
2360	39/A'	–	LFB	C1	23	SOUTH FACE OF BEAM CRACKED

NOTES:

1. SEE SHEETS S-117, S-118, S-119 & S-120 FOR EXISTING BEAM REPAIR PLANS.
2. SEE SHEET S-517 FOR REPAIR DETAILS.
3. SEE SHEET S-606 FOR QUANTITY SUMMARY.

GRAPHIC SCALE

CHECK GRAPHIC SCALE BEFORE USING

APPR	DATE	DESCRIPTION	MJS

NAVFAC

COMMONWEALTH OF MASSACHUSETTS — MARC NICOLAZZO — No. 51724 — REGISTERED PROFESSIONAL ENGINEER

SEAL

MN FST A JOINT VENTURE

A/E INFO

APPROVED: David W. Thurnfield

FOR COMMANDER NAVFAC

ACTIVITY: PER DOCUMENT FROM PNSY CODE 980, KITTERY ME

SATISFACTORY TO — DATE: 05/09/14

DES: MN | DRW: FC | CHK: MN

PM/DM: NATHAN LIBBY

BRANCH MANAGER: NATHAN MAHER

FEAD/PM&E: AMIN BAHROUR

FIRE PROTECTION: N/A

DEPARTMENT OF THE NAVY
NAVAL FACILITIES ENGINEERING COMMAND
PUBLIC WORKS DEPARTMENT – MAINE
PORTSMOUTH NAVAL SHIPYARD

NAVAL FACILITIES ENGINEERING COMMAND – MID-ATLANTIC
NAVAL SHIPYARD – PORTSMOUTH, NH
KITTERY, MAINE

STRUCTURAL REPAIRS AT BERTHS 11A, 11B AND 11C

EXISTING BEAM REPAIR SCHEDULE – SHEET 4 OF 5

EPROJECT NO.: 1356489

CONSTR. CONTR. NO.: N40085-XX-C-XXXX

NAVFAC DRAWING NO.: 12716117

SHEET 121 OF 144

S-605 | FP2-16-757

DRAWFORM REVISION: 10 OCTOBER 2014

FILE NAME: S:\1794\Active\179410203\1\TP-104A PNSY Lifting Study\TP-104A PNSY Lifting Study\02 CAD\08 Structural\FP2-16-757.dwg LAYOUT NAME: EXISTING BEAM REPAIR SCHEDULE – SHEET 4 OF 5 PLOTTED: Friday, May 13, 2016 – 3:00pm USER: cpoodridge

BEAM REPAIR SCHEDULE (CONT)

LOCATION				REPAIR		DEFECT
REPAIR ID NO	BENT	PILE LINE	BEAM ID OR PILE CAP	TYPE	QUANTITY	
2361	A'	G/H	PC	A1	12	DELAMINATION ON EAST FACE
2362	39/A'	–	R2	C1	23	NORTH FACE OF BEAM CRACKED
2363	–	–	–	–	–	NOT USED
2364	A'/B'	–	LFB	B1	12	BOTTOM EDGE SPALLED
2365	A'/B'	–	R2	C1	12	NORTH FACE OF BEAM CRACKED
2366	B'	F/G	PC	A1	10	DELAMINATION ON EAST FACE
2367	A'/B'	–	R2	A1	5	DELAMINATION ON BOTTOM OF BEAM
2368	A'/B'	–	R2	C1	12	SOUTH FACE OF BEAM CRACKED
2369	A'	D/E	PC	A1	2	DELAMINATION ON WEST FACE
2370	B'	C/D	PC	D	5	EAST FACE CRACKED
2371	B'	A	PC	A1	2	DELAMINATION ON SOUTH FACE
2372	B'/C'	–	LFB	C1	12	SOUTH FACE OF BEAM CRACKED
2373	C'	G/H	PC	A1	1	SPALL WITH REBAR ON BOTTOM
2374	B'/C'	–	R4	C1	5	SOUTH FACE OF BEAM CRACKED
2375	B'/C'	–	R4/WFB	B1	12	SPALL ON SOUTH FACE OF INTERMEDIATE LONGITUDINAL BEAM
2376	C'	G/H	PC	A1	10	DELAMINATION ON WEST FACE
2377	D'	J	PC	A1	8	DELAMINATION ON EAST FACE
2378	C'/D'	–	R2	C1	12	NORTH FACE OF BEAM CRACKED
2379	C'/D'	–	R4/WFB	C1	23	SOUTH FACE OF INTERMEDIATE BEAM CRACKED
2380	D'	B	PC	B1	9	SPALL WITH REBAR AT UTILITY OPENING
2381	D'	I/J	PC	B1	3	SPALL WITH REBAR ON BOTTOM
2382	D'/D"	D/E	–	C1	10	PREVIOUS REPAIR POSSIBLE DELAMINATION
2383	D'/D"	–	WFB	A1	20	DELAMINATION ON SOUTH FACE
2384	D"	A/B	PC	D	2	BOTTOM CRACKED
2385	D"	B/C	PC	D	2	BOTTOM CRACKED
2386	D"	A/B	PC	B1	6	SPALL WITH REBAR AT UTILITY OPENING

BEAM REPAIR QUANTITIES BERTH 11A

REPAIR TYPE	QTY (SF OR LF)	UNIT	BID QUANTITY
A1	181	SF	210
B1	58	SF	70
C1	755	LF	870
D	442	LF	510

BEAM REPAIR QUANTITIES BERTH 11B

REPAIR TYPE	QTY (SF OR LF)	UNIT	BID QUANTITY
A1	246	SF	285
B1	23	SF	30
C1	425	LF	490
D	291	LF	335

BEAM REPAIR QUANTITIES BERTH 11C

REPAIR TYPE	QTY (SF OR LF)	UNIT	BID QUANTITY
A1	308	SF	355
B1	74	SF	85
C1	838	LF	965
D	27	LF	35

NOTES:

1. SEE SHEETS S-117, S-118, S-119 & S-120 FOR EXISTING BEAM REPAIR PLANS.
2. SEE SHEET S-517 FOR REPAIR DETAILS.

GRAPHIC SCALE

CHECK GRAPHIC SCALE BEFORE USING

APPR | DATE | DESCRIPTION | STM

NAVFAC

SEAL

MN FST A JOINT VENTURE

A/E INFO

APPROVED
David W. Grunfeld
FOR COMMANDER NAVFAC

ACTIVITY:
PER DOCUMENT FROM PNSY
CODE 980, KITTERY ME

SATISFACTORY TO DATE: 05/09/16

DES: MN | DRW: FC | CHK: MN

PM/DM: NATHAN LIBBY

BRANCH MANAGER: NATHAN MAHER

FEAD/PM&E: AMIN BAHROUR

FIRE PROTECTION: N/A

DEPARTMENT OF THE NAVY
NAVAL FACILITIES ENGINEERING COMMAND
PUBLIC WORKS DEPARTMENT - MAINE
PORTSMOUTH NAVAL SHIPYARD

NAVAL FACILITIES ENGINEERING COMMAND ~ MID-ATLANTIC
NAVAL SHIPYARD - PORTSMOUTH, NH

STRUCTURAL REPAIRS
AT BERTHS 11A, 11B AND 11C
KITTERY, MAINE

EXISTING BEAM REPAIR SCHEDULE - SHEET 5 OF 5

EPROJECT NO.: 1356489

CONSTR. CONTR. NO.
N40085-XX-C-XXXX

NAVFAC DRAWING NO.
12716118

SHEET 122 OF 144

S-606 | FP2-16-758

DRAWFORM REVISION: 10 OCTOBER 2014

FILE NAME: S:\1794\Active\1794102203\YP-104A PNSY Lifting Study\YP-104A PNSY Lifting Study\02 CADD\08 Structural\FP2-16-758.dwg LAYOUT NAME: EXISTING BEAM REPAIR SCHEDULE - SHEET 5 OF 5 PLOTTED: Friday, May 13, 2016 - 3:00pm USER: cgoodridge

PILE JACKET REPAIR SCHEDULE

REPAIR ID NO	LOCATION		REPAIR TYPE
	BENT	PILE	
3001	B1	D	2
3002	C	D	2
3003	C	E	2
3004	D	B	1
3005	E	B	1
3006	E	C	4
3007	F	B	1
3008	G	A	4
3009	G	B	4
3010	G	D	1
3011	K	A'	1
3012	K	B'	1
3013	L	B	1
3014	L	F	2
3015	L	G	1
3016	L	I	1
3017	M	B	2
3018	N	A	1
3019	N	J	1
3020	O	A	1
3021	O	E	1
3022	O	G	1
3023	P	A	1
3024	P	B	1
3025	P	E	1
3026	Q	F	2
3027	T	G	2
3028	U	H	1
3029	V	G	1
3030	V	H	1
3031	W	F	2
3032	W	G	2
3033	1	G	2
3034	2	B	3
3035	3	A	3
3036	3	G	1
3037	4	A	3
3038	4	C	3
3039	4	H	1
3040	6	E	1
3041	6	G	2
3042	7	B	3
3043	7	G	1
3044	8	F	2
3045	8	G	1
3046	9	A	3

PILE JACKET REPAIR SCHEDULE (CONT)

REPAIR ID NO	LOCATION		REPAIR TYPE
	BENT	PILE	
3047	9	G	2
3048	10	E	3
3049	11	E	1
3050	11	G	2
3051	12	E	1
3052	12	F	2
3053	12	G	2
3054	17	D	1
3055	18	A	2
3056	22	F	1
3057	23	E	2
3058	25	D	2
3059	27	F	2
3060	28	F	2
3061	29	F	2
3062	31	A	2
3063	31	F	2
3064	31	G	1
3065	31	H	4
3066	32	F	3
3067	34	C	2
3068	35	A	2
3069	36	D	2
3070	37	D	2
3071	39	A	3
3072	A'	F	3
3073	A'	E	3
3074	B'	D	1
3075	D'	B	1
3076	18	B	5
3077	19	C	5

PILE JACKET REPAIR QUANTITIES BERTH 11A

REPAIR TYPE	TOTAL (EA)	BID QUANTITY (EA)
1	26	29
2	14	16
3	7	8
4	3	4
5	0	0

PILE JACKET REPAIR QUANTITIES BERTH 11B

REPAIR TYPE	TOTAL (EA)	BID QUANTITY (EA)
1	3	4
2	4	5
3	0	0
4	0	0
5	2	3

PILE JACKET REPAIR QUANTITIES BERTH 11C

REPAIR TYPE	TOTAL (EA)	BID QUANTITY (EA)
1	3	4
2	10	11
3	4	5
4	1	2
5	0	0

NOTES:

1. SEE SHEET S-121 AND S-122 FOR PILE JACKET REPAIR PLANS.
2. SEE SHEET S-518 FOR PILE JACKET REPAIR DETAILS.

GRAPHIC SCALE

CHECK GRAPHIC SCALE BEFORE USING

APPR | DATE | DESCRIPTION | SYM

NAVFAC

COMMONWEALTH OF MASSACHUSETTS — MARK NICOLAZZO — No. 51724 — REGISTERED PROFESSIONAL ENGINEER — CIVIL

SEAL

MNFST A JOINT VENTURE

A/E INFO

APPROVED: David W. Dunfield

FOR COMMANDER NAVFAC

ACTIVITY: PER DOCUMENT FROM PNSY CODE 980, KITTERY ME

SATISFACTORY TO DATE: 05/09/16

DES MN | DRW FC | CHK MN

PM/DM: NATHAN LIBBY

BRANCH MANAGER: NATHAN MAHER

FEAD/PM&E: AMIN BAHROUR

FIRE PROTECTION: N/A

DEPARTMENT OF THE NAVY
NAVAL FACILITIES ENGINEERING COMMAND
PUBLIC WORKS DEPARTMENT - MAINE
PORTSMOUTH NAVAL SHIPYARD

NAVAL FACILITIES ENGINEERING COMMAND ~ MID-ATLANTIC
NAVAL SHIPYARD - PORTSMOUTH, NH
KITTERY, MAINE

STRUCTURAL REPAIRS AT BERTHS 11A, 11B AND 11C

EXISTING PILE JACKET REPAIR SCHEDULE

EPROJECT NO.: 1356489

CONSTR. CONTR. NO.: N40085-XX-C-XXXX

NAVFAC DRAWING NO.: 12716119

SHEET 123 OF 144

S-607 | FP2-16-759

DRAWFORM REVISION: 10 OCTOBER 2014

FILE NAME: S:\1794\Active\179410203\V\TP-1044 PNSY Lifting Study\TP-1044 PNSY Lifting Study\02 CAD\08 Structural\FP2-16-759.dwg LAYOUT NAME: EXISTING PILE JACKET REPAIR SCHEDULE PLOTTED: Friday, May 13, 2016 - 3:00pm USER: cgoodridge

SHUTTER PANEL BULKHEAD
WALE/ROCK ANCHOR SCHEDULE

LOCATION	WALE	ROCK ANCHORS					
KING PILE	TYPE	ANCHOR No	TYPE	HORZ ANGLE 'α'	ANCHOR LOCATION 'X' (FT)	ESTIMATED ROCK ELEVATION	TEST
NOT USED							
NOT USED							
3–4	3	A3	3	0°	9'–4 1/2"	–54	PROOF
4–5	2	A4	2	0°	3'–1 1/2"	–48	PROOF
5–6	2	A5	2	3°	3'–1 1/2"	–44	PROOF
6–7	2	A6	2	3°	3'–1 1/2"	–44	PROOF
7–8	1	A7	1	0°	3'–1 1/2"	–42	PROOF
8–9	1	A8	1	–3°	3'–1 1/2"	–42	PROOF
9–10	1	A9	1	6°	3'–1 1/2"	–42	PROOF
10–11	1	A10	1	4°	3'–1 1/2"	–42	PROOF
11–12	1	A11	1	–3°	3'–1 1/2"	–40	PROOF
12–13	1	A12	1	0	3'–1 1/2"	–40	PROOF
13–14	1	A13	1	0	3'–1 1/2"	–40	PROOF
14–15	1	A14	1	0	3'–1 1/2"	–38	PROOF
15–16	1	A15	1	0	3'–1 1/2"	–38	PROOF
16–17	1	A16	1	0	3'–1 1/2"	–38	PROOF
17–18	1	A17	1	–3°	3'–1 1/2"	–38	PROOF
18–19	1	A18	1	0	3'–1 1/2"	–38	PROOF
19–20	1	A19	1	0	3'–1 1/2"	–38	PROOF
20–21	1	A20	1	0	3'–1 1/2"	–38	PROOF
21–22	1	A21	1	0	3'–1 1/2"	–38	PROOF
22–23	1	A22	1	0	3'–1 1/2"	–38	PROOF
23–24	1	A23	1	0	3'–1 1/2"	–38	PROOF
24–25	1	A24	1	0	3'–1 1/2"	–38	PROOF
25–26	1	A25	1	0	3'–1 1/2"	–38	PROOF
26–27	1	A26	1	2°	3'–1 1/2"	–38	PROOF
27–28	1	A27	1	0	3'–1 1/2"	–38	PROOF
28–29	1	A28	1	0	3'–1 1/2"	–38	PROOF
29–30	1	A29	1	–2°	3'–1 1/2"	–38	PROOF
30–31	1	A30	1	0	3'–1 1/2"	–38	PROOF
31–32	1	A31	1	–2°	3'–1 1/2"	–38	PROOF
32–33	1	A32	1	0	3'–1 1/2"	–38	PERFORMANCE
33–34	1	A33	1	0	3'–1 1/2"	–38	PROOF
34–35	2	A34	2	0	3'–1 1/2"	–38	PROOF
35–36	2	A35	2	0	3'–1 1/2"	–38	PROOF
36–37	2	A36	2	0	3'–1 1/2"	–38	PROOF
37–38	2	A37	2	0°	3'–1 1/2"	–40	PROOF
38–39	2	A38	2	3°	3'–1 1/2"	–40	PROOF
39–40	2	A39	2	0	3'–1 1/2"	–40	PROOF
40–41	2	A40	2	6°	3'–1 1/2"	–40	PROOF
41–42	2	A41	2	0	3'–1 1/2"	–40	PROOF
42–43	2	A42	2	2°	3'–1 1/2"	–40	PROOF
43–44	2	A43	2	0	3'–1 1/2"	–40	PROOF
44–45	2	A44	2	0	3'–1 1/2"	–40	PROOF
45–46	2	A45	2	0	3'–1 1/2"	–40	PROOF
46–47	2	A46	2	0	3'–1 1/2"	–40	PROOF
47–48	2	A47	2	0	3'–1 1/2"	–40	PROOF
48–49	2	A48	2	3°	3'–1 1/2"	–40	PROOF
49–50	2	A49	2	0	3'–1 1/2"	–40	PROOF
50–51	2	A50	2	0	3'–1 1/2"	–40	PROOF
51–52	2	A51	2	0	3'–1 1/2"	–40	PROOF
52–53	2	A52	2	0	3'–1 1/2"	–44	PERFORMANCE
53–54	3	A53	3	–3°	3'–1 1/2"	–44	PROOF
54–55	3	A54	3	3°	3'–1 1/2"	–44	PROOF
55–56	3	A55	3	0	3'–1 1/2"	–44	PERFORMANCE
56–57	3	A56	3	0	3'–1 1/2"	–44	PROOF
57–58	3	A57	3	0	3'–1 1/2"	–44	PROOF
58–59	3	A58	3	0	3'–1 1/2"	–48	PROOF
59–60	3	A59	3	0	3'–1 1/2"	–48	PROOF

SHUTTER PANEL BULKHEAD
WALE/ROCK ANCHOR SCHEDULE

LOCATION	WALE	ROCK ANCHORS					
KING PILE	TYPE	ANCHOR No	TYPE	HORZ. ANGLE 'α'	ANCHOR LOCATION 'X' (FT)	ESTIMATED ROCK ELEVATION	TEST
60–61	3	A60	3	0	3'–1 1/2"	–48	PROOF
61–62	3	A61	3	0	3'–1 1/2"	–48	PROOF
62–63	3	A62	3	0	3'–1 1/2"	–48	PROOF
63–64	3	A63	3	0	3'–1 1/2"	–48	PROOF
64–65	3	A64	3	0	3–1 1/2"	–48	PROOF
65–66	3	A65	3	0	3–1 1/2"	–48	PROOF
66–67	3	A66	3	–3°	3–1 1/2"	–48	PROOF
67–68	3	A67	3	0	3–1 1/2"	–44	PROOF
68–69	3	A68	3	0	3–1 1/2"	–44	PROOF
69–70	2	A69	2	6°	3–1 1/2"	–44	PROOF
70–71	2	A70	2	0	3–1 1/2"	–44	PROOF
71–72	2	A71	2	–3°	3–1 1/2"	–40	PROOF
72–73	2	A72	2	0	3–1 1/2"	–40	PROOF
73–74	2	A73	2	0	3–1 1/2"	–40	PROOF
74–75	2	A74	2	0	3–1 1/2"	–40	PROOF
75–76	2	A75	2	0	3–1 1/2"	–40	PROOF
76–77	2	A76	2	6°	3–1 1/2"	–40	PROOF
77–78	2	A77	2	0	3–1 1/2"	–40	PROOF
78–79	2	A78	2	0	3–1 1/2"	–40	PROOF
79–80	2	A79	2	0	3–1 1/2"	–40	PROOF
80–81	2	A80	2	0	3–1 1/2"	–40	PROOF
81–82	2	A81	2	0	3–1 1/2"	–42	PROOF
82–83	2	A82	2	0	3–1 1/2"	–42	PROOF
83–84	2	A83	2	0	3–1 1/2"	–42	PROOF
84–85	2	A84	2	0	3–1 1/2"	–42	PROOF
85–86	2	A85	2	0	3–1 1/2"	–45	PROOF
86–87	3	A86	3	0	3–1 1/2"	–45	PROOF
87–88	3	A87	3	0	3–1 1/2"	–45	PROOF
88–89	3	A88	3	5°	3–1 1/2"	–45	PROOF
89–90	3	A89	3	13°	3–1 1/2"	–45	PROOF
90–91	3	A90	3	14°	3–1 1/2"	–45	PROOF
91–92	3	A91	3	2°	3–1 1/2"	–48	PROOF
92–93	3	A92	3	–1°	3–1 1/2"	–48	PROOF

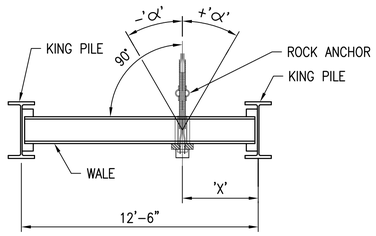

SCHEMATIC PLAN
SCALE: 1/4"=1'–0"

ROCK ANCHOR TABLE

TYPE	DESIGN LOADS (KIPS)	No. OF STRANDS	VERTICAL ANGLE 'β'	BOND LENGTH 'L' (FT)
1	310	9	45°	26
2	340	10	45°	28
3	390	12	45°	33
4	480	14	SEE SCHEDULE BELOW	38
5	590	17	SEE SCHEDULE BELOW	46

STEEL SHEET PILE BULKHEAD
ROCK ANCHOR SCHEDULE

ANOCHOR No	TYPE	HORZ. ANGLE 'α'	VERTICAL ANGLE 'β'	ESTIMATED ROCK ELEVATION	TEST
B1	4*	0°	67°	–76	PROOF
B2	4*	–3°	67°	–78	PROOF
B3	4*	4°	62°	–78	PROOF
B4	4*	0°	62°	–78	PEFORMANCE
B5	4*	0°	60°	–78	PROOF
B6	4*	0°	60°	–78	PROOF
B7	4*	0°	60°	–78	PROOF
B8	4*	0°	60°	–78	PROOF
B9	4*	8°	62°	–76	PROOF
B10	2**	3°	45°	–58	PROOF
B11	2**	3°	45°	–54	PROOF
B12	2**	2°	45°	–54	PROOF
B13	2**	2°	45°	–54	PROOF

* USE TYPE 5 ANCHORS FOR BID OPTION 4, ANCHORS A 93 THRU A 101
** USE TYPE 3 ANCHORS FOR BID OPTION 4, ANCHORS A 102 AND A 103

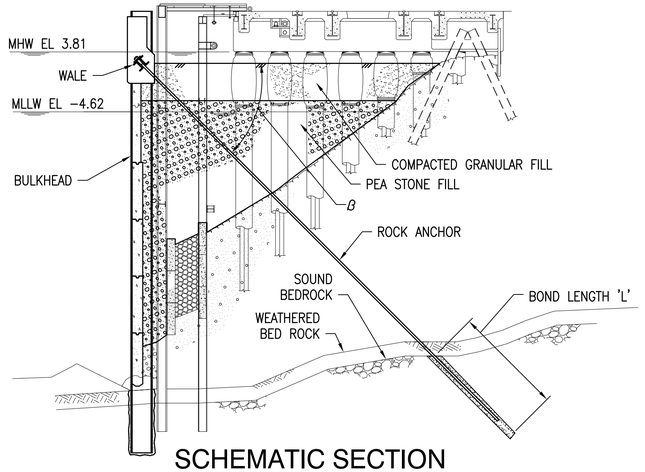

SCHEMATIC SECTION
SCALE: 3/32" = 1'–0"

NOTES:

1. ALL ROCK ANCHOR DRILL HOLES SHALL BE 6" DIAMETER.
2. THE FIRST PRODUCTION ANCHOR SHALL BE PERFORMANCE TESTED.
3. PERFORMANCE AND PROOF TEST LOADS SHALL BE 1.33 x DESIGN LOAD.

GRAPHIC SCALE
3/32"=1'–0" 4' 0 4' 8' 12' 16' 32'
CHECK GRAPHIC SCALE BEFORE USING

APPR | DATE | DESCRIPTION | SYM

NAVFAC

DONALD W. HARVIE CIVIL No. 31035 REGISTERED PROFESSIONAL ENGINEER
3/7/16
SEAL

MN FST A JOINT VENTURE
A/E INFO

APPROVED
David W. Shenfield
FOR COMMANDER NAVFAC

ACTIVITY:
PER DOCUMENT FROM PNSY CODE 980, KITTERY ME

SATISFACTORY TO DATE: 05/09/16

DES: MAB DRW FC CHK: DWH

PM/DM: NATHAN LIBBY

BRANCH MANAGER: NATHAN MAHER

LEAD/PM&E: AMIN BAHROUR

FIRE PROTECTION: N/A

DEPARTMENT OF THE NAVY
NAVAL FACILITIES ENGINEERING COMMAND
PUBLIC WORKS DEPARTMENT – MAINE
PORTSMOUTH NAVAL SHIPYARD

NAVAL FACILITIES ENGINEERING COMMAND – MID-ATLANTIC
NAVAL SHIPYARD – PORTSMOUTH, NH
KITTERY, MAINE

STRUCTURAL REPAIRS AT BERTHS 11A, 11B AND 11C

WALE & ANCHOR SCHEDULE

EPROJECT NO.: 1356489

CONSTR. CONTR. NO. N40085–XX–C–XXXX

NAVFAC DRAWING NO. 12716120

SHEET 124 OF 144

S-608 | FP2-16-760

DRAWFORM REVISION: 10 OCTOBER 2014

FILE NAME: S:\1794\Active\1794102031\TP-104A PNSY Lifting Study\TP-104A PNSY Lifting Study\02 CAD\08 Structural\FP2-16-760.dwg LAYOUT NAME: WALE & ANCHOR SCHEDULE PLOTTED: Friday, May 13, 2016 - 3:01pm USER: cgoodridge

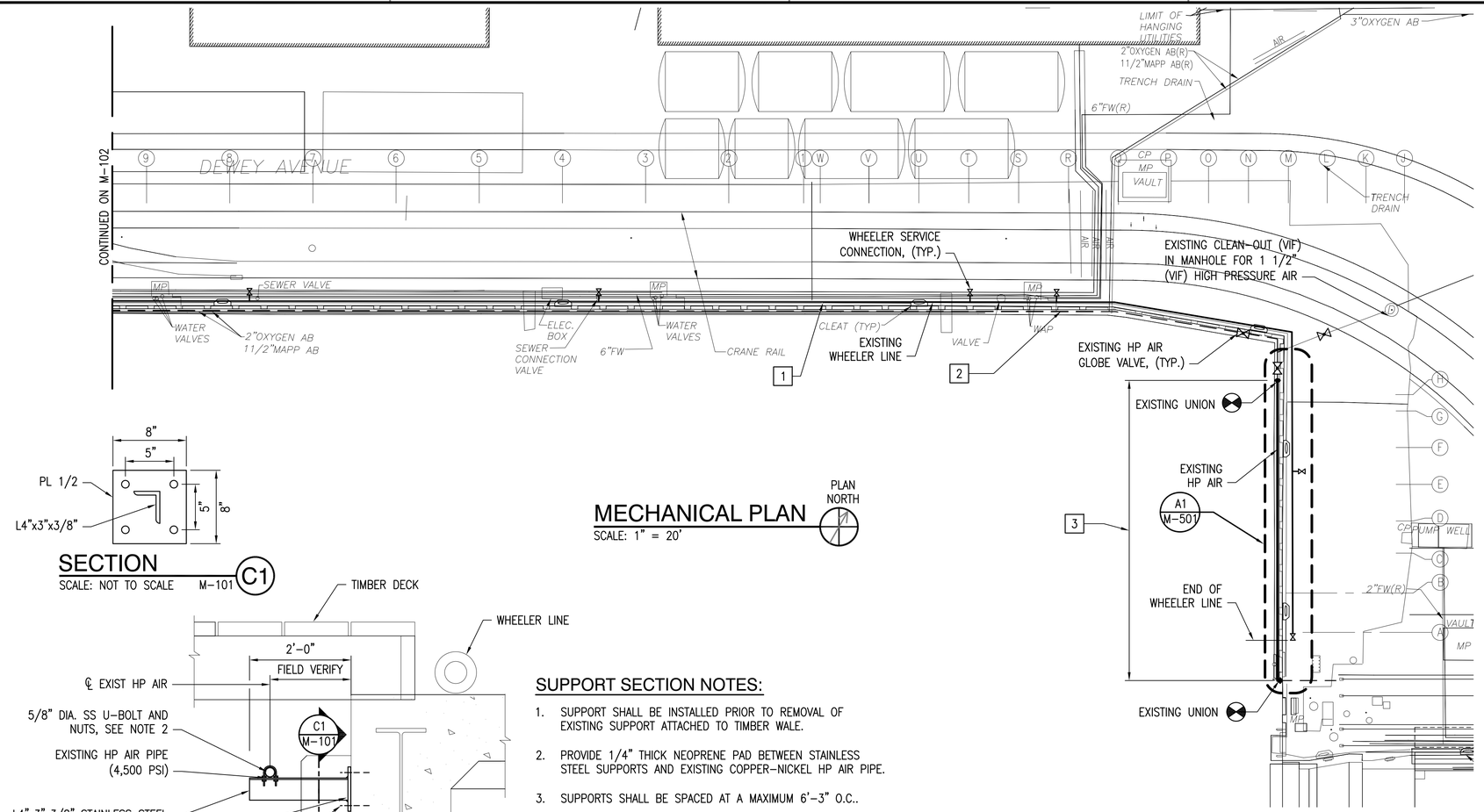

MECHANICAL PLAN

SCALE: 1" = 20'

PLAN NORTH

SECTION

SCALE: NOT TO SCALE M-101 C1

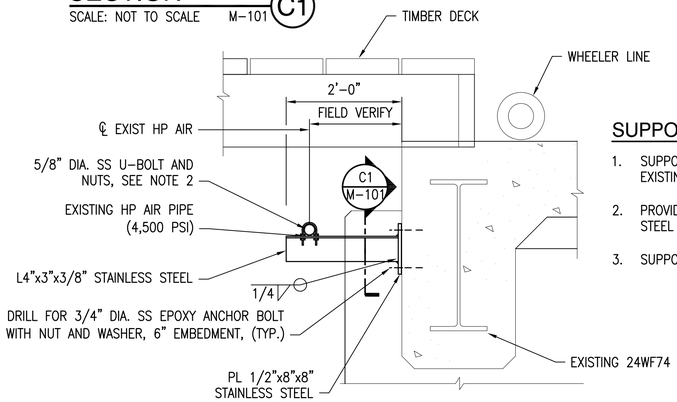

TYPICAL HP AIR SUPPORT BRACKET

SCALE: 1" = 1'-0"

SUPPORT SECTION NOTES:

1. SUPPORT SHALL BE INSTALLED PRIOR TO REMOVAL OF EXISTING SUPPORT ATTACHED TO TIMBER WALE.
2. PROVIDE 1/4" THICK NEOPRENE PAD BETWEEN STAINLESS STEEL SUPPORTS AND EXISTING COPPER-NICKEL HP AIR PIPE.
3. SUPPORTS SHALL BE SPACED AT A MAXIMUM 6'-3" O.C..

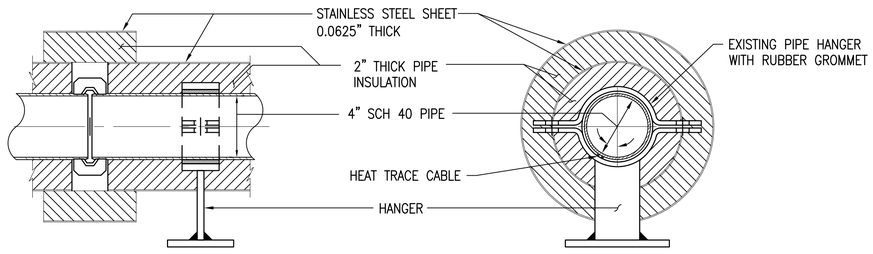

NOTE:

1. DAMAGED AND REINSTALLED PARTS OF THE WHEELER SYSTEM SHALL BE REPLACED. MATERIALS AND DETAILS TO MATCH EXISTING.

EXISTING WHEELER PIPELINE DETAILS

SCALE: NOT TO SCALE

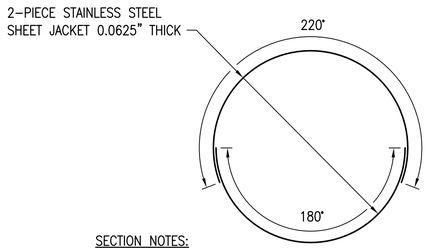

SECTION NOTES:

1. EXISTING WHEELER PIPING IS 4" NOMINAL DIAMETER, SCHEDULE 40, CARBON STEEL SEAMLESS, GALVANIZED COATED OR PLAIN.
2. EXISTING PIPE JOINTS ARE EITHER FUSION WELDED BUTT JOINTS, 125 OR 150 LB. WELD FLANGE BOLTED JOINTS, WITH GASKET OR GRUVLOK STANDARD CUT GROOVE PIPE ENDS WITH GRUVLOK COUPLING AND GASKET OR COMBINATION THEREOF.
3. ALL 2 1/2" VALVES ARE TO BE INSTALLED IN A VERTICAL ORIENTATION.

STAINLESS STEEL JACKET CROSS-SECTION

SCALE: NOT TO SCALE

GENERAL NOTES

1. COORDINATE ALL ACTIVITIES ASSOCIATED WITH HP AIR WITH PNSY CODE 982 SHOP 990.
2. REFER TO TYPICAL HP AIR SUPPORT SECTION FOR REQUIREMENTS TO RE-SUPPORT THE HIGH PRESSURE AIR WITH STAINLESS STEEL SUPPORTS.
3. REFER TO MECHANICAL PHASING DRAWINGS FOR WHEELER LINE AND SERVICE CONNECTIONS THAT WILL NOT BE IN SERVICE DURING EACH CONSTRUCTION PHASE.
4. REFER TO DRAWINGS E-101 AND E-102 FOR ADDITIONAL REQUIREMENTS ON REMOVAL AND RE-INSTALLATION OF THE HEAT TRACE SYSTEM ON THE WHEELER PIPE.
5. TEMPORARY HIGH PRESSURE AIR: CONTRACTOR SHALL RENT AND FURNISH TO THE SHIPYARD THE FOLLOWING EQUIPMENT AND SERVICES:
   - A. AIR COOLED COMPRESSOR UNIVERSAL HIGHPACK MODEL 55H75, 5 STAGE, PRESSURE 5,000 PSI, CAPACITY 88 CFM, MOTOR 75 HP, 460 V.
   - B. ADDITIONAL DRYER RACK WITH INTERLOCKING HOSE.
   - C. SERVICE TECHNICIAN FOR START UP INSPECTION AND OPERATOR TRAINING.

☐ WHEELER NOTES

1. REMOVE AND RETAIN FOR REINSTALLATION EXISTING 4" WHEELER LINE, 3" SERVICE CONNECTIONS, METAL JACKETING AND SADDLE SUPPORTS. DISPOSE OF EXISTING 2" THICK INSULATION. FOLLOWING THE COMPLETION OF WORK IN EACH PHASE, REINSTALL THE WHEELER LINE, METAL JACKETING AND SERVICE CONNECTIONS AT EXISTING LOCATIONS. PROVIDE NEW INSULATION, TEST AND ACTIVATE. SEE DRAWING M-102 FOR ADDITIONAL WHEELER NOTES. CONTRACTOR SHALL REPLACE ANY DAMAGED PIPING, JACKETING, SUPPORTS, AS A RESULT OF HIS WORK.

☐ HIGH PRESSURE AIR NOTES

2. HIGH PRESSURE AIR IS TO BE RETAINED IN ITS EXISTING LOCATION AND DEACTIVATED WHEN WORK IS ON GOING ADJACENT TO THE LINE. REFER TO MECHANICAL PHASING DRAWINGS FOR LENGTHS OF HIGH PRESSURE AIR THAT WILL NOT BE IN SERVICE DURING EACH CONSTRUCTION PHASE.
3. REMOVE SECTION OF EXISTING HIGH PRESSURE AIR PIPING BETWEEN UNION JOINTS (APPROXIMATELY 100 FEET) TO FACILITATE INSTALLATION OF STEEL SHEETING. FOLLOWING THE COMPLETION OF WORK, REINSTALL THE PIPING, TEST AND ACTIVATE. SEE PART PLAN ON DRAWING M-501.

KEY PLAN

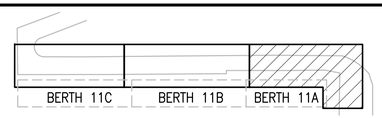

GRAPHIC SCALE

1"=20' 20' 0 20' 40'

CHECK GRAPHIC SCALE BEFORE USING

NO.	DESCRIPTION	DATE	APPR

NAVFAC

COMMONWEALTH OF MASSACHUSETTS MICHAEL W. TRAVERS MECHANICAL No. 48711 REGISTERED PROFESSIONAL ENGINEER SEAL

MNFST A JOINT VENTURE A/E INFO

APPROVED: David W. Thurfield FOR COMMANDER NAVFAC

ACTIVITY: PER DOCUMENT FROM PNSY CODE 980, KITTERY ME

SATISFACTORY TO DATE: 05/09/16

DES	YK	DRW	HF	CHK	YK

PM/DM: NATHAN LIBBY

BRANCH MANAGER: NATHAN MAHER

FEAD/PM&E: AMN BAHROUR

FIRE PROTECTION: N/A

DEPARTMENT OF THE NAVY
NAVAL FACILITIES ENGINEERING COMMAND
PUBLIC WORKS DEPARTMENT - MAINE
PORTSMOUTH NAVAL SHIPYARD

NAVAL FACILITIES ENGINEERING COMMAND - MID-ATLANTIC
NAVAL SHIPYARD - PORTSMOUTH, NH
KITTERY, MAINE

STRUCTURAL REPAIRS AT BERTHS 11A, 11B AND 11C

MECHANICAL PLAN - SHEET 1 OF 2

EPROJECT NO.: 1356489

CONSTR. CONTR. NO. N40085-XX-C-XXXX

NAVFAC DRAWING NO. 12716121

SHEET 125 OF 144

M-101 | FP2-16-761

DRAWFORM REVISION: 10 OCTOBER 2014

FILE NAME: S:\1794\Active\179410203\VTP-104A PNSY Lifting Study\TP-104A PNSY Lifting Study\02 CAD\11 Mechanical\FP2-16-762.dwg LAYOUT NAME: MECHANICAL PLAN - SHEET 1 OF 2 PLOTTED: Friday, May 13, 2016 - 3:01pm USER: cpoolridge

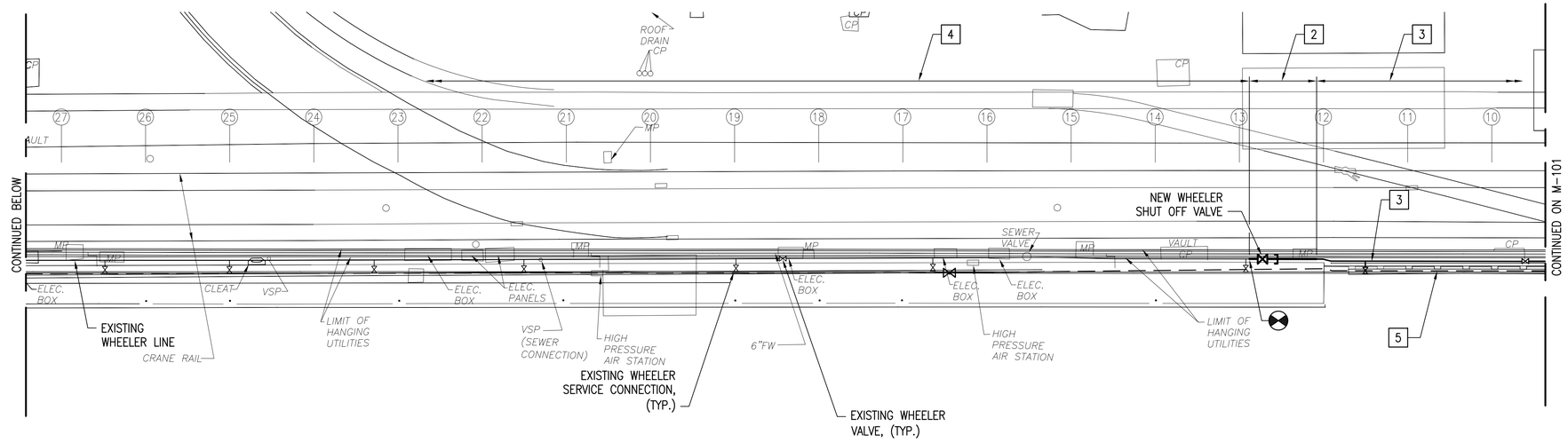

MECHANICAL PLAN

SCALE: 1" = 20'

PLAN NORTH

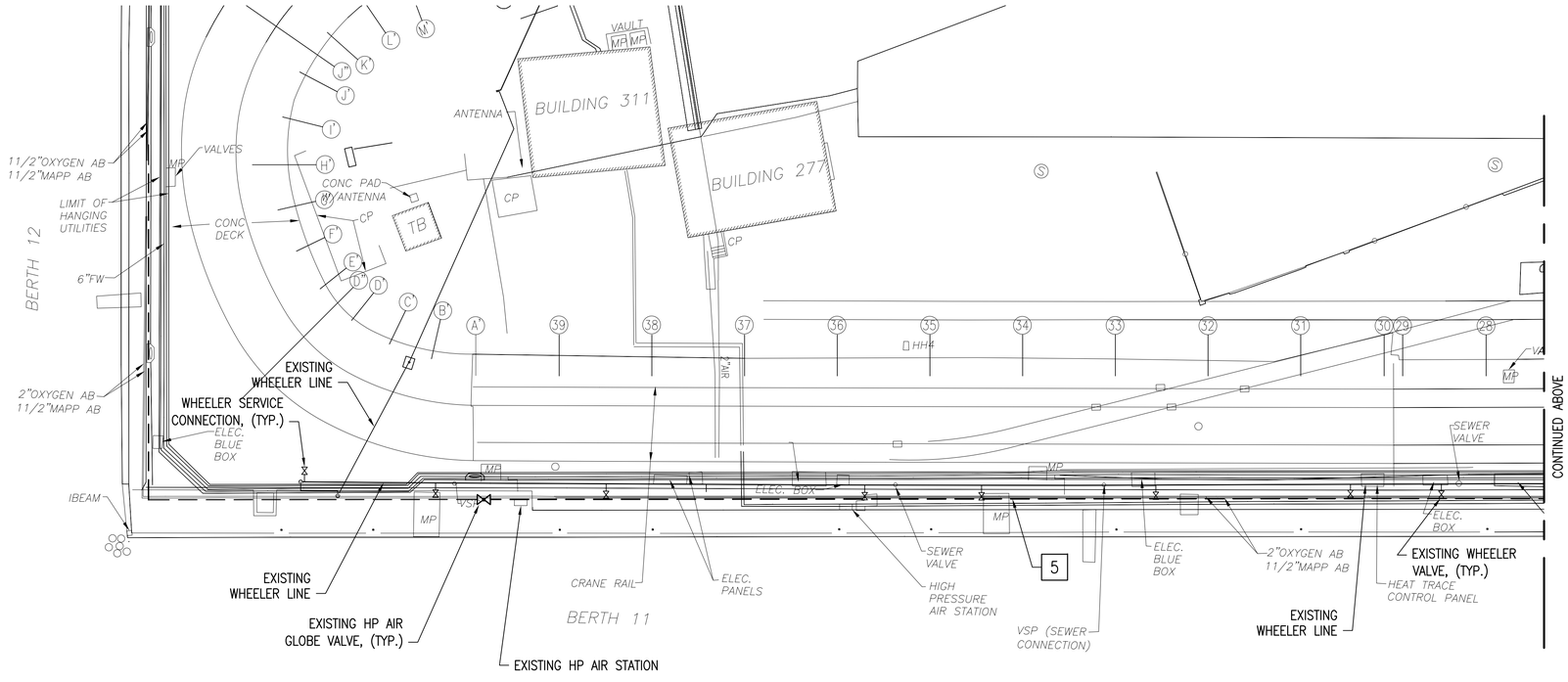

MECHANICAL PLAN

SCALE: 1" = 20'

PLAN NORTH

GENERAL NOTES

1. FOR GENERAL NOTES, SEE SHEET M-101.

WHEELER NOTES

2. WHEELER LINE CUT AND CAP NOTES:

2.1 REMOVE JACKET AND INSULATION TO EXPOSE WHEELER LINE PIPE BETWEEN BENT 12 AND THE NEXT WESTERLY SERVICE CONNECTION NEAR BENT 13 (APPROXIMATELY 20 FEET OF PIPE, CONTRACTOR TO VERIFY LENGTH).

2.2 FOR REMOVAL OF HEAT TRACE CABLE REQUIREMENTS SEE ELECTRICAL DRAWINGS.

2.3 WHEELER PIPE SHALL BE CUT, CAPPED AND VALVED ON PIPE SIDE INDICATED TO REMAIN. EXISTING JOINTS ARE ASSUMED TO BE LOCATED AT BENTS. CONTRACTOR IS RESPONSIBLE FOR LOCATING AND DETERMINING CUT LOCATION(S). REFER TO SHEET M-101 FOR PIPE DETAIL AND PIPE NOTES.

2.4 PROVIDE HEAT TRACE, INSULATION, JACKET AND SUPPORT BETWEEN END OF WHEELER LINE PIPING REMAINING IN SERVICE AND THE CAPPED END.

3. WHEELER LINE PIPING AND APPURTENANCES REMOVED, PROTECTED, STORED AND REINSTALLED NOTES:

3.1 CONTRACTOR TO REMOVE PIPING JACKET AND INSULATION (APPROXIMATELY 525 FEET OF PIPE, CONTRACTOR TO VERIFY LENGTH).

3.2 FOR REMOVAL OF HEAT TRACE CABLE REQUIREMENTS SEE ELECTRICAL DRAWINGS.

3.3 WHEELER LINE PIPING, SERVICE, CONNECTIONS, SUPPORTS AND JACKET SHALL BE STORED FOR FUTURE REINSTALL. CONTRACTOR SHALL BE RESPONSIBLE FOR DIVISION OF THE 525 FEET OF PIPE INTO WORKABLE SEGMENTS FOR REMOVAL AND STORAGE.

3.4 FOLLOWING COMPLETION OF PHASE I WORK, REINSTALL EXISTING PIPE WITH SUPPORTS AS REQUIRED, PROVIDE NEW INSULATION AND VAPOR BARRIER, REUSE EXISTING JACKET. WHERE JACKET IS DAMAGED OR INTEGRITY COMPROMISED PROVIDE NEW JACKETING OF LIKE KIND.

3.5 PROVIDE HEAT TRACE FOR ENTIRE LENGTH OF REINSTALLED WHEELER LINE PIPE. SEE ELECTRICAL DRAWINGS FOR REQUIREMENTS.

4. EXISTING WHEELER LINE PIPING TO REMAIN IN PLACE.

HIGH PRESSURE AIR NOTES

5. HIGH PRESSURE AIR IS TO BE RETAINED IN ITS EXISTING LOCATION AND DEACTIVATED WHEN WORK IS ON GOING ADJACENT TO THE LINE. REFER TO MECHANICAL PHASING DRAWINGS FOR LENGTHS OF HIGH PRESSURE AIR THAT WILL NOT BE IN SERVICE DURING EACH CONSTRUCTION PHASE.

KEY PLAN

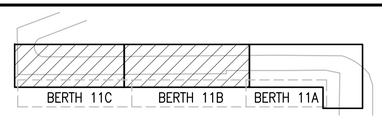

GRAPHIC SCALE

1"=20'

20' 0 20' 40'

CHECK GRAPHIC SCALE BEFORE USING

APPR	DATE	DESCRIPTION	SYM

NAVFAC

COMMONWEALTH OF MASSACHUSETTS
MICHAEL W. TRAVERS
MECHANICAL
No. 48711
REGISTERED PROFESSIONAL ENGINEER
SEAL

MNFST
A JOINT VENTURE
A/E INFO

APPROVED
David W. Trumfield
FOR COMMANDER NAVFAC

ACTIVITY:
PER DOCUMENT FROM PNSY
CODE 980, KITTERY ME

SATISFACTORY TO DATE: 05/09/16

DES: YK DRW: HF CHK: YK

PM/DM: NATHAN LIBBY

BRANCH MANAGER: NATHAN MAHER

FEAD/PM&E: AMIN BAHROUR

FIRE PROTECTION: N/A

DEPARTMENT OF THE NAVY
NAVAL FACILITIES ENGINEERING COMMAND
PUBLIC WORKS DEPARTMENT - MAINE
PORTSMOUTH NAVAL SHIPYARD

NAVAL FACILITIES ENGINEERING COMMAND ~ MID-ATLANTIC
NAVAL SHIPYARD ~ PORTSMOUTH, NH
KITTERY, MAINE

STRUCTURAL REPAIRS
AT BERTHS 11A, 11B AND 11C

MECHANICAL PLAN - SHEET 2 OF 2

EPROJECT NO.: 1356489

CONSTR. CONTR. NO.
N40085-XX-C-XXXX

NAVFAC DRAWING NO.
12716122

SHEET 126 OF 144

M-102 | FP2-16-762

DRAWFORM REVISION: 10 OCTOBER 2014

FILE NAME: S:\1794\Active\179410203\V\TP-104A PNSY Lifting Study\TP-104A PNSY Lifting Study\02 CADD\11 Mechanical\FP2-16-762.dwg LAYOUT NAME: MECHANICAL PLAN - SHEET 2 OF 2 PLOTTED: Friday, May 13, 2016 - 3:01pm USER: cpoodridge

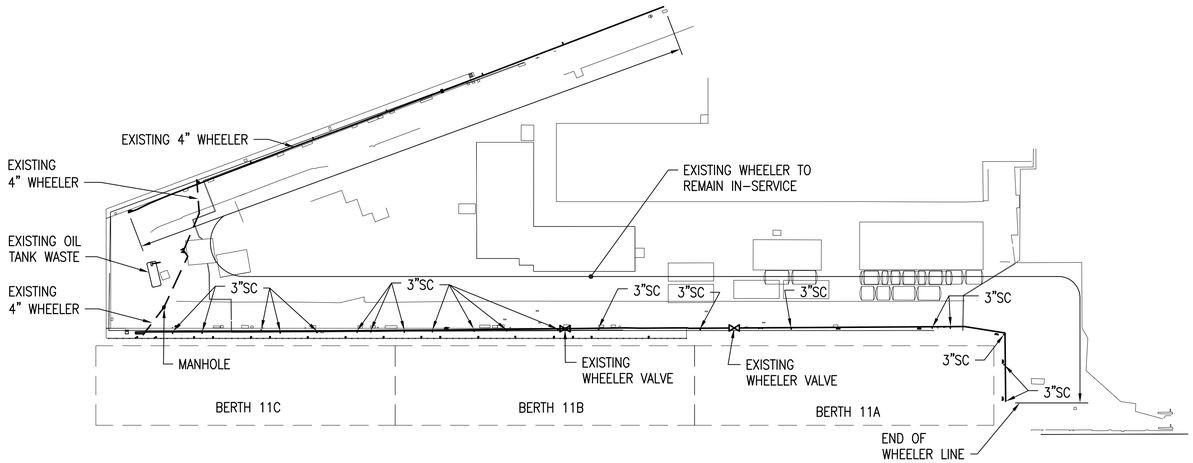

NOTE: PHASE 3 SIMILAR

WHEELER PLAN - PHASE 1

SCALE: 1" = 100'

PLAN NORTH

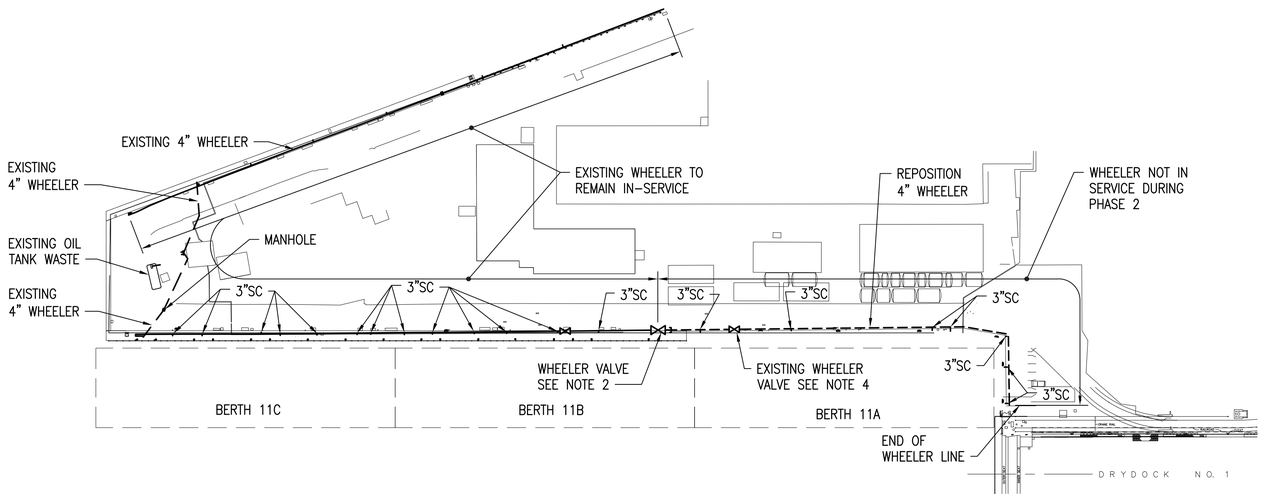

WHEELER PLAN - PHASE 2

SCALE: 1" = 100'

PLAN NORTH

GENERAL NOTES

1. IN PHASES 1 AND 3 THE WHEELER LINE SHALL BE OPERATIONAL.
2. PROVIDE SHUT OFF VALVE TO ISOLATE WHEELER LINE FOR PHASE 2 WORK.
3. PRIOR TO THE END OF THE PHASE 2 THE WHEELER PIPE SHALL BE REINSTALLED AND REACTIVATED.
4. THE EXISTING SHUT OFF VALVE WITHIN THE LIMITS OF THE PHASE 2 WILL BE REINSTALLED AND MAINTAINED.

LEGEND

———	EXISTING TO REMAIN
- - - - - -	RELOCATED/REMOVED AND REINSTALLED PIPING
— — —	UNDER DECK PIPING
- - ⋈ - -	WHEELER VALVE
SC	SERVICE CONNECTION

GRAPHIC SCALE

1"=100'

100' 0 100' 200'

CHECK GRAPHIC SCALE BEFORE USING

APPR	DATE	DESCRIPTION	SYM

NAVFAC

COMMONWEALTH OF MASSACHUSETTS
MICHAEL W. TRAVERS
MECHANICAL
No. 48711
REGISTERED PROFESSIONAL ENGINEER
SEAL

MNFST
A JOINT VENTURE
A/E INFO

APPROVED
David W. Grunfeld
FOR COMMANDER NAVFAC

ACTIVITY:
PER DOCUMENT FROM PNSY
CODE 980, KITTERY ME

SATISFACTORY TO DATE: 05/09/16

DES: YK	DRW: HF	CHK: YK

PM/DM: NATHAN LIBBY
BRANCH MANAGER: NATHAN MAHER
FEAD/PM&E: AMIN BAHROUR
FIRE PROTECTION: N/A

DEPARTMENT OF THE NAVY
NAVAL FACILITIES ENGINEERING COMMAND
PUBLIC WORKS DEPARTMENT - MAINE
PORTSMOUTH NAVAL SHIPYARD

NAVAL FACILITIES ENGINEERING COMMAND ~ MID-ATLANTIC
NAVAL SHIPYARD ~ PORTSMOUTH, NH
KITTERY, MAINE

STRUCTURAL REPAIRS
AT BERTHS 11A, 11B AND 11C

MECHANICAL PHASING PLAN - WHEELER PIPE

EPROJECT NO.: 1356489

CONSTR. CONTR. NO.
N40085-XX-C-XXXX

NAVFAC DRAWING NO.
12716123

SHEET 127 OF 144

M-103 | FP2-16-763

DRAWFORM REVISION: 10 OCTOBER 2014

FILE NAME: S:\1794\Active\179410203\r\TP-104A PNSY Lifting Study\TP-104A PNSY Lifting Study\02 CADD\11 Mechanical\FP2-16-763.dwg LAYOUT NAME: MECHANICAL PHASING PLAN - WHEELER PIPE PLOTTED: Friday, May 13, 2016 - 3:02pm USER: cgoodridge

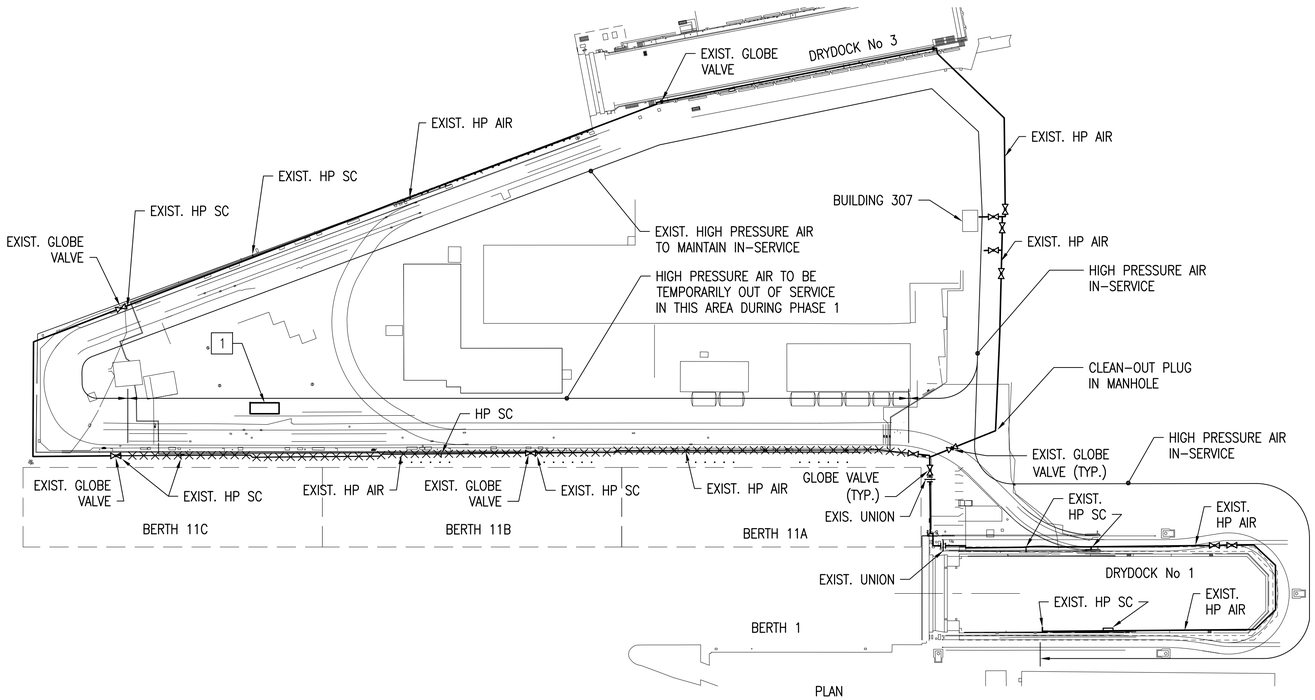

HIGH PRESSURE AIR PLAN - PHASE 1

SCALE: 1" = 100'

PLAN NORTH

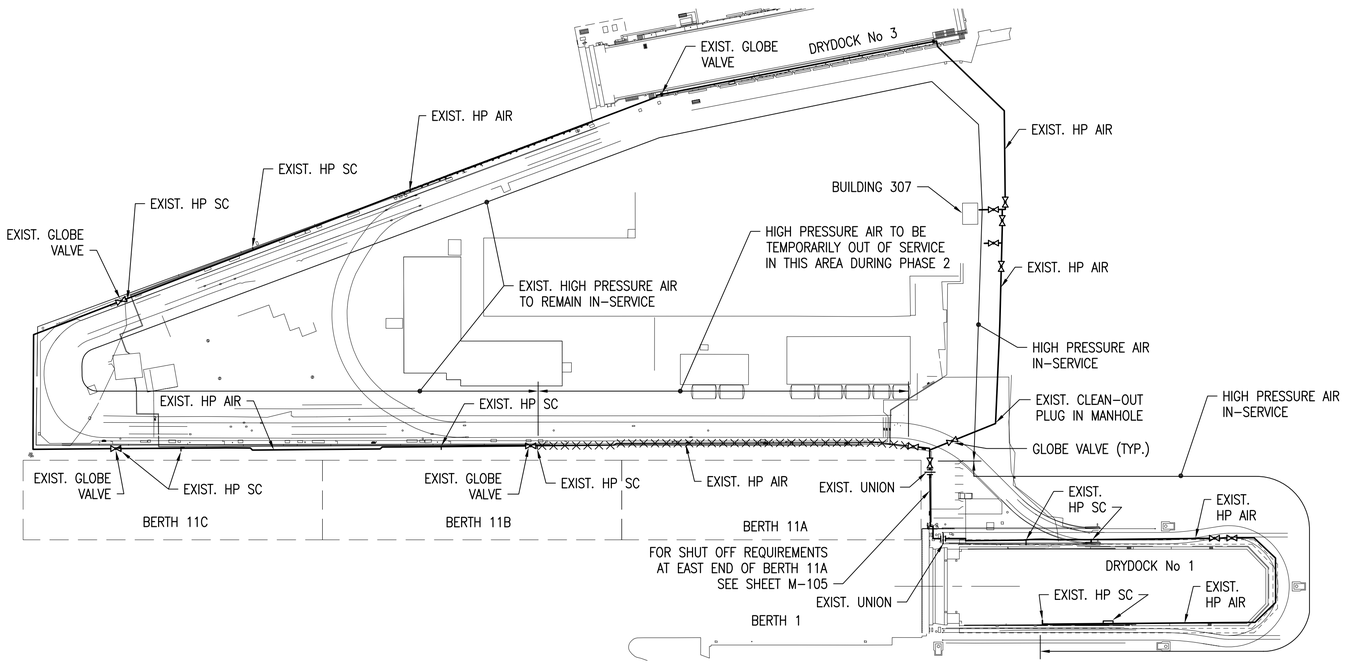

HIGH PRESSURE AIR PLAN - PHASE 2

SCALE: 1" = 100'

PLAN NORTH

GENERAL NOTES

1. THERE IS AN EXISTING 4500 PSI HIGH PRESSURE AIR PIPE IN AREA THAT SERVICES BERTHS 11, 12 AND 13 AND DRYDOCK NOS 1 AND 3. CONTRACTOR SHALL EXERCISE EXTREME CAUTION. HP AIR PIPE AND SERVICE CONNECTIONS SHALL BE PROTECTED AT ALL TIMES.
2. AS PHASE 2 WORK STARTS THE HP AIR PIPE SUPPORTS SHALL BE REMOVED FROM THE TIMBER WALE AND RESUPPORTED FROM THE CONCRETE DECK TO ALLOW FOR DEMOLITION OF THE TIMBER WALE.
3. AT THE END OF EACH PHASE THE HP AIR SYSTEM WITHIN THE LIMITS OF THE PIPE THAT WAS SHUT DOWN SHALL BE INSPECTED, AND REACTIVATED. IF THE LINE WAS DAMAGED OR REQUIRED REMOVAL AND REWELDING, IT WILL ALSO NEED TO BE TESTED.

NEW WORK NOTES

1. CONTRACTOR TO RENT AND PROVIDE A TEMPORARY HP AIR COMPRESSOR, DRY RACK AND HOSES FOR USE AT BERTH 11C. SEE DRAWING M-101 FOR ADDITIONAL REQUIREMENTS.
2. CONTRACTOR TO PROVIDE A STEAM PRESSURE REDUCING STATION FOR TESTING OF HP AIR PIPING. REFER TO SPECIFICATIONS AND DETAIL ON ON DRAWING M-501.

LEGEND

———	EXISTING HP AIR TO REMAIN IN SERVICE
——×——×——	EXISTING HP AIR WILL BE TEMPORARILY OUT OF SERVICE FOR THE DURATION OF THE NOTED CONSTRUCTION PHASE.
——⋈——	EXISTING GLOBE VALVE
——||——	EXISTING UNION JOINT
——|——	EXISTING HP AIR SERVICE CONNECTION
HP	HIGH PRESSURE
SC	SERVICE CONNECTION

GRAPHIC SCALE

1"=100' 100' 0 100' 200'

CHECK GRAPHIC SCALE BEFORE USING

APPR	DATE	DESCRIPTION	MJS

NAVFAC

COMMONWEALTH OF MASSACHUSETTS
MICHAEL W. TRAVERS
MECHANICAL
No. 48711
REGISTERED PROFESSIONAL ENGINEER
SEAL

MNFST
A JOINT VENTURE
A/E INFO

APPROVED
David W. Trumfield
FOR COMMANDER NAVFAC

ACTIVITY:
PER DOCUMENT FROM PNSY
CODE 980, KITTERY ME

SATISFACTORY TO DATE: 05/09/14

DES: YK DRW: HF CHK: YK

PM/DM: NATHAN LIBBY
BRANCH MANAGER: NATHAN MAHER
FEAD/PM&E: AMIN BAHROUR
FIRE PROTECTION: N/A

DEPARTMENT OF THE NAVY
NAVAL FACILITIES ENGINEERING COMMAND
PUBLIC WORKS DEPARTMENT - MAINE
PORTSMOUTH NAVAL SHIPYARD

NAVAL FACILITIES ENGINEERING COMMAND – MID-ATLANTIC
NAVAL SHIPYARD – PORTSMOUTH, NH
KITTERY, MAINE

STRUCTURAL REPAIRS AT BERTHS 11A, 11B AND 11C

MECHANICAL PHASING PLAN – HIGH PRESSURE AIR – SHEET 1 OF 2

EPROJECT NO.: 1356489

CONSTR. CONTR. NO.
N40085-XX-C-XXXX

NAVFAC DRAWING NO.
12716124

SHEET 128 OF 144

M-104 | FP2-16-764

DRAWFORM REVISION: 10 OCTOBER 2014

FILE NAME: S:\1794\Active\179410203\VTP-104A PNSY Lifting Study\TP-104A PNSY Lifting Study\02 CAD\11 Mechanical\FP2-16-765.dwg LAYOUT NAME: MECHANICAL PHASING PLAN – HIGH PRESSURE AIR – SHEET 1 OF 2 PLOTTED: Friday, May 13, 2016 – 3:03pm USER: cpoodridge

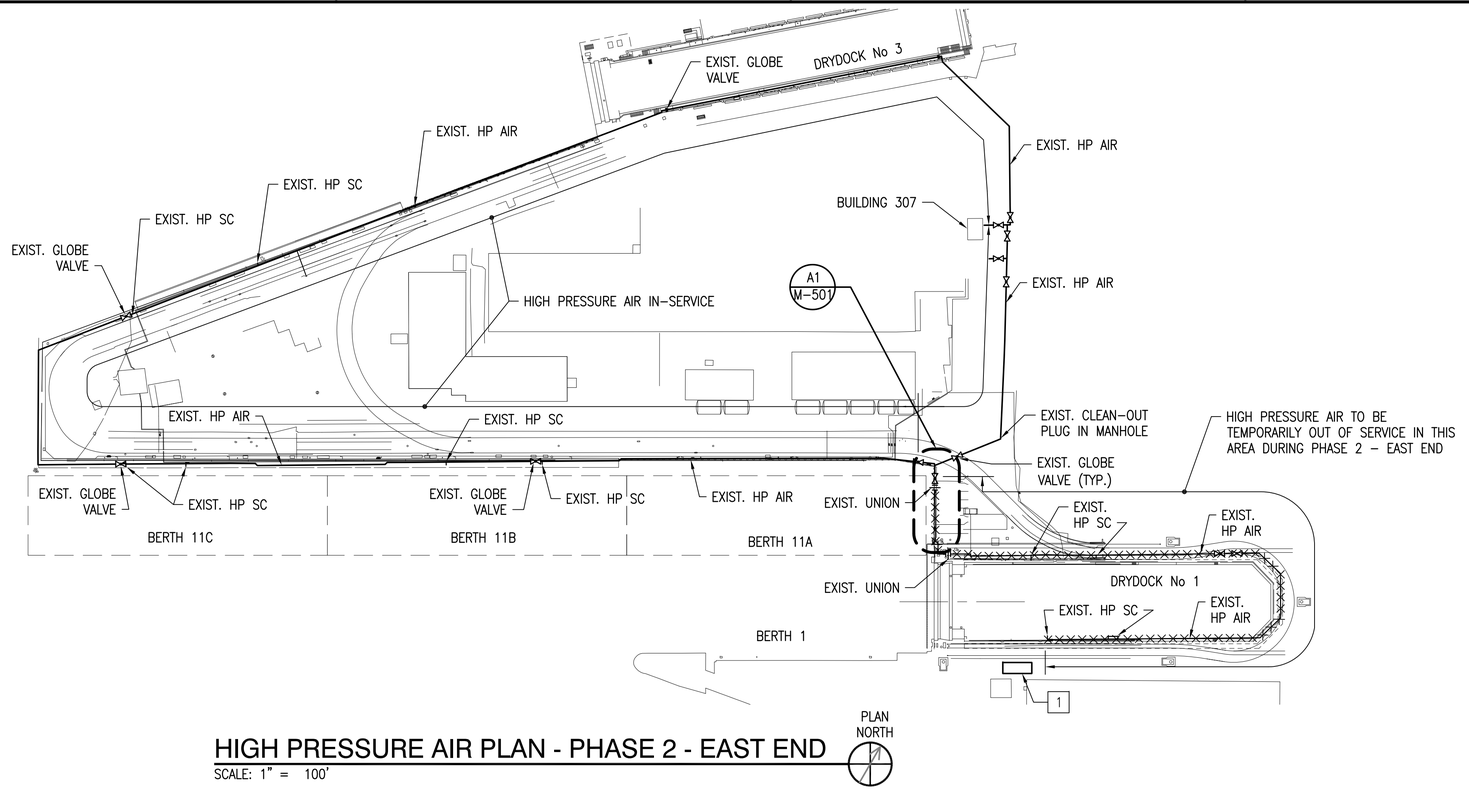

HIGH PRESSURE AIR PLAN - PHASE 2 - EAST END

SCALE: 1" = 100'

PLAN NORTH

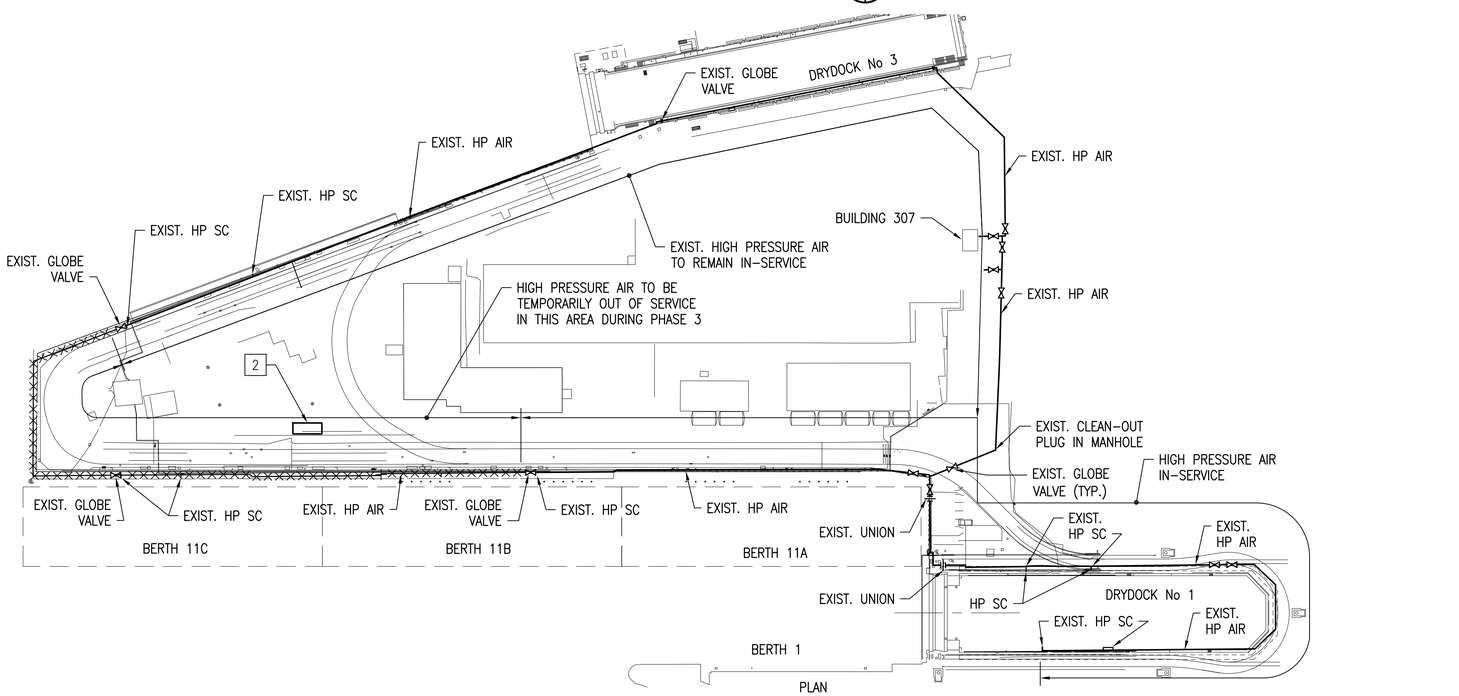

HIGH PRESSURE AIR PLAN - PHASE 3

SCALE: 1" = 100'

PLAN NORTH

GENERAL NOTES

1. THERE IS AN EXISTING 4500 PSI HIGH PRESSURE AIR PIPE IN AREA THAT SERVICES BERTHS 11, 12 AND 13 AND DRYDOCK NOS 1 AND 3. CONTRACTOR SHALL EXERCISE EXTREME CAUTION. HP AIR PIPE AND SERVICE CONNECTIONS SHALL BE PROTECTED AT ALL TIMES.
2. AS PHASE 2 WORK STARTS THE HP AIR PIPE SUPPORTS SHALL BE REMOVED FROM THE TIMBER WALE AND RESUPPORTED FROM THE CONCRETE DECK TO ALLOW FOR DEMOLITION OF THE TIMBER WALE.
3. AT THE END OF EACH PHASE THE HP AIR SYSTEM WITHIN THE LIMITS OF THE PIPE THAT WAS SHUT DOWN SHALL BE INSPECTED, AND REACTIVATED. IF THE LINE WAS DAMAGED OR REQUIRED REMOVAL AND REWELDING, IT WILL ALSO NEED TO BE TESTED.

☐ NEW WORK NOTES

1. CONTRACTOR TO RENT AND PROVIDE A TEMPORARY HP AIR COMPRESSOR, DRY RACK AND HOSES FOR USE AT DRY DOCK No 1. SEE SHEET M–101 FOR ADDITIONAL REQUIREMENTS. SEE SHEET E–101 FOR POWER SUPPLY FOR A TEMPORARY HP AIR COMPRESSOR.
2. CONTRACTOR TO RENT AND PROVIDE A TEMPORARY HP AIR COMPRESSOR, DRY RACK AND HOSES FOR USE AT BERTH 11B. SEE SHEET M–101 FOR ADDITIONAL REQUIREMENTS.

GRAPHIC SCALE

1"=100' 100' 0 100' 200'

CHECK GRAPHIC SCALE BEFORE USING

APPR	DATE	DESCRIPTION	MJS

NAVFAC

COMMONWEALTH OF MASSACHUSETTS
MICHAEL W. TRAVERS
MECHANICAL
No. 48711
REGISTERED PROFESSIONAL ENGINEER
SEAL

MNFST
A JOINT VENTURE
A/E INFO

APPROVED
Commander, NAVFAC
David W. Thurnfield
FOR COMMANDER NAVFAC

ACTIVITY:
PER DOCUMENT FROM PNSY
CODE 980, KITTERY ME

SATISFACTORY TO DATE: 05/09/14

DES: YK DRW: HF CHK: YK

PM/DM: NATHAN LIBBY
BRANCH MANAGER: NATHAN MAHER
FEAD/PM&E: AMIN BAHROUR
FIRE PROTECTION: N/A

DEPARTMENT OF THE NAVY
NAVAL FACILITIES ENGINEERING COMMAND
PUBLIC WORKS DEPARTMENT – MAINE
NAVAL FACILITIES ENGINEERING COMMAND – MID-ATLANTIC
NAVAL SHIPYARD – PORTSMOUTH, NH
PORTSMOUTH NAVAL SHIPYARD
KITTERY, MAINE

STRUCTURAL REPAIRS
AT BERTHS 11A, 11B AND 11C

MECHANICAL PHASING PLAN – HIGH PRESSURE AIR – SHEET 2 OF 2

EPROJECT NO.: 1356489

CONSTR. CONTR. NO.
N40085–XX–C–XXXX

NAVFAC DRAWING NO.
12716125

SHEET 129 OF 144

M-105 | FP2-16-765

DRAWFORM REVISION: 10 OCTOBER 2014

FILE NAME: S:\1794\Active\179410203\V\TP-104A PNSY Lifting Study\TP-104A PNSY Lifting Study\02 CAD\11 Mechanical\FP2-16-765.dwg LAYOUT NAME: MECHANICAL PHASING PLAN – HIGH PRESSURE AIR – SHEET 2 OF 2 PLOTTED: Friday, May 13, 2016 – 3:03pm USER: cpoodridge

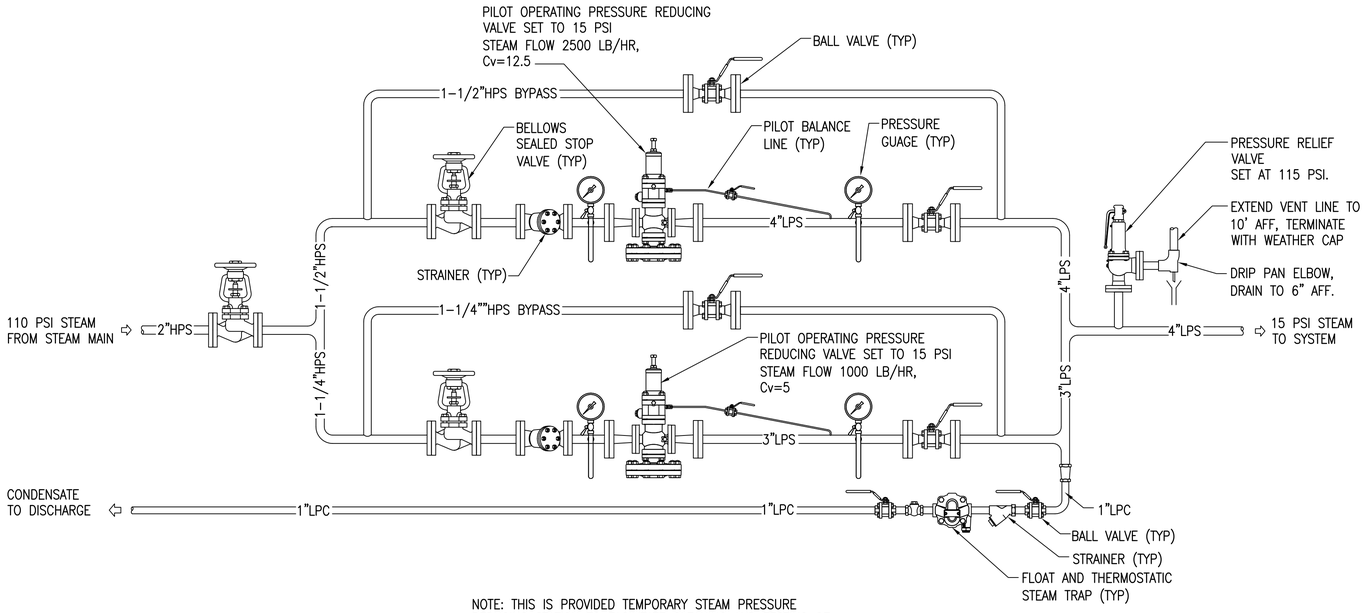

NOTE: THIS IS PROVIDED TEMPORARY STEAM PRESSURE REDUCING STATION TO FACILITATE CLEANING AND TESTING OF THE HIGH PRESSURE AIR SYSTEM. SEE NOTE 1.

TEMPORARY STEAM STATION DETAIL

NOT TO SCALE

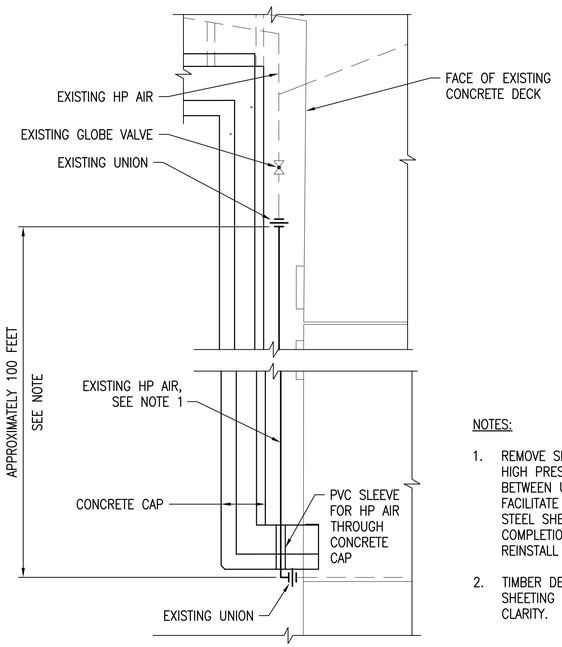

NOTES:

1. REMOVE SECTION OF EXISTING HIGH PRESSURE AIR PIPING BETWEEN UNION JOINTS TO FACILITATE INSTALLATION OF STEEL SHEETING. FOLLOWING THE COMPLETION OF WORK, REINSTALL THE PIPING.
2. TIMBER DECK AND STEEL SHEETING NOT SHOWN FOR CLARITY.

HIGH PRESSURE AIR PART PLAN

NOT TO SCALE

M-101, M-105 (A1)

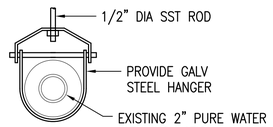

DETAIL - REPLACEMENT HANGER

SCALE: 1 1/2"=1'-0"

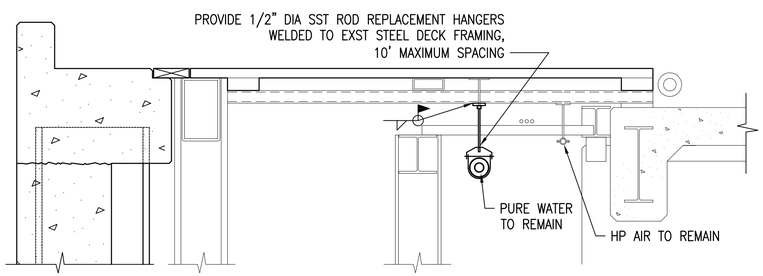

SECTION - PURE WATER REPLACEMENT HANGER

SCALE: 1/2"=1'-0"

GENERAL NOTES

1. TEMPORARY STEAM PRESSURE REDUCING STATION SHALL PROVIDE LOW PRESSURE STEAM FOR HEATING CLEANING SOLUTION OF THE HIGH PRESSURE AIR SYSTEM. SEE SPECIFICATION SECTION 22 15 26.00 20 FOR ADDITIONAL INFORMATION. THE CONTRACTOR MAY PROPOSE ALTERNATIVE MEANS FOR HEATING THE CLEANING SOLUTION IF ACCEPTED BY THE CONTRACTING OFFICER.

KEY PLAN

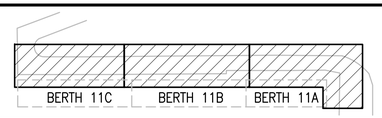

GRAPHIC SCALE

CHECK GRAPHIC SCALE BEFORE USING

NO.	DESCRIPTION	DATE	APPR

NAVFAC

COMMONWEALTH OF MASSACHUSETTS
MICHAEL W. TRAVERS
MECHANICAL
No. 48711
REGISTERED PROFESSIONAL ENGINEER
SEAL

MNFST
A JOINT VENTURE
A/E INFO

APPROVED
David W. Trumfield
FOR COMMANDER NAVFAC

ACTIVITY:
PER DOCUMENT FROM PNSY CODE 980, KITTERY ME

SATISFACTORY TO DATE: 05/09/16

DES	YK	DRW	HF	CHK	YK

PM/DM: NATHAN LIBBY
BRANCH MANAGER: NATHAN MAHER
FEAD/PM&E: AMIN BAHROUR
FIRE PROTECTION: N/A

DEPARTMENT OF THE NAVY
NAVAL FACILITIES ENGINEERING COMMAND
PUBLIC WORKS DEPARTMENT - MAINE
PORTSMOUTH NAVAL SHIPYARD

NAVAL FACILITIES ENGINEERING COMMAND ~ MID-ATLANTIC
NAVAL SHIPYARD - PORTSMOUTH, NH
KITTERY, MAINE

STRUCTURAL REPAIRS
AT BERTHS 11A, 11B AND 11C

MECHANICAL DETAILS

EPROJECT NO.: 1356489
CONSTR. CONTR. NO.: N40085-XX-C-XXXX
NAVFAC DRAWING NO.: 12716126
SHEET 130 OF 144

M-501 | FP2-16-766

DRAWFORM REVISION: 10 OCTOBER 2014

FILE NAME: S:\1794\Active\179410203\VTP-104A PNSY Lifting Study\TP-104A PNSY Lifting Study\02 CAD\11 Mechanical\FP2-16-766.dwg LAYOUT NAME: MECHANICAL DETAILS PLOTTED: Friday, May 13, 2016 - 3:04pm USER: cgoodridge

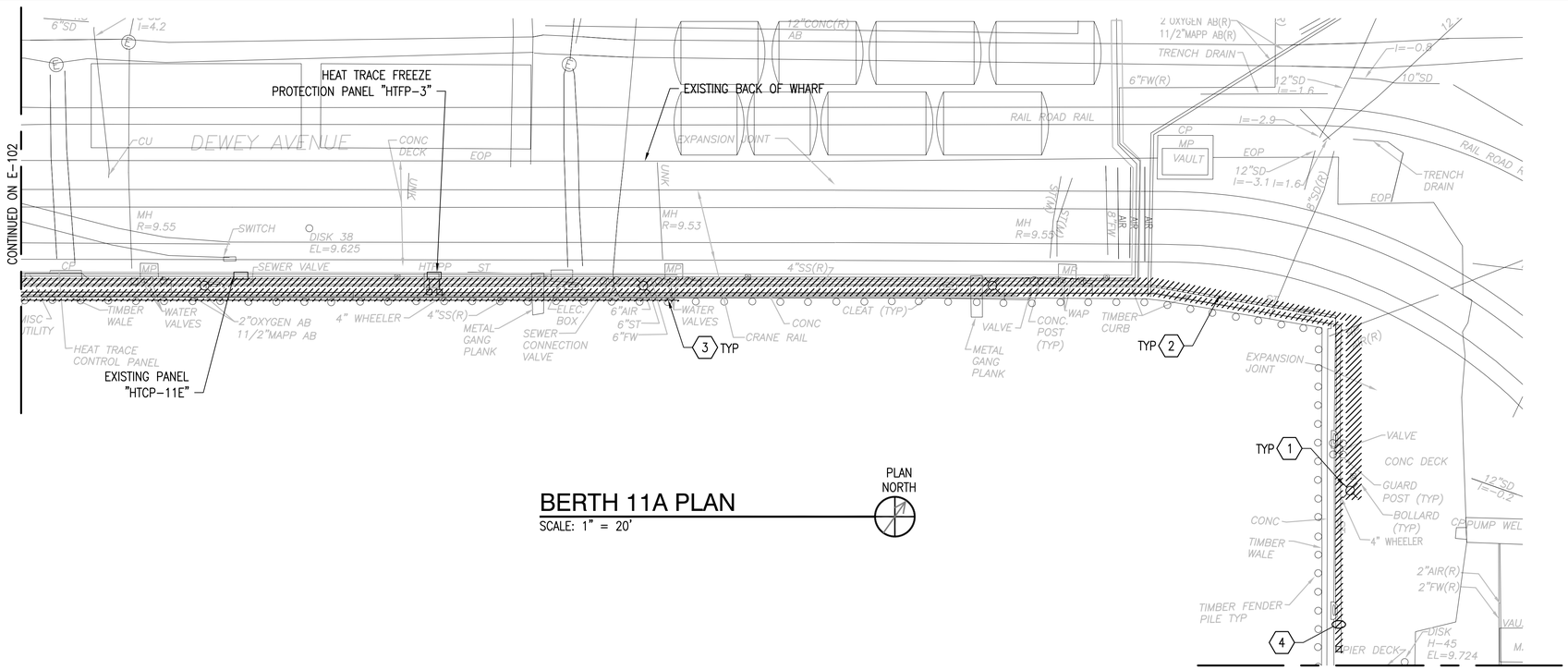

BERTH 11A PLAN

SCALE: 1" = 20'

PLAN NORTH

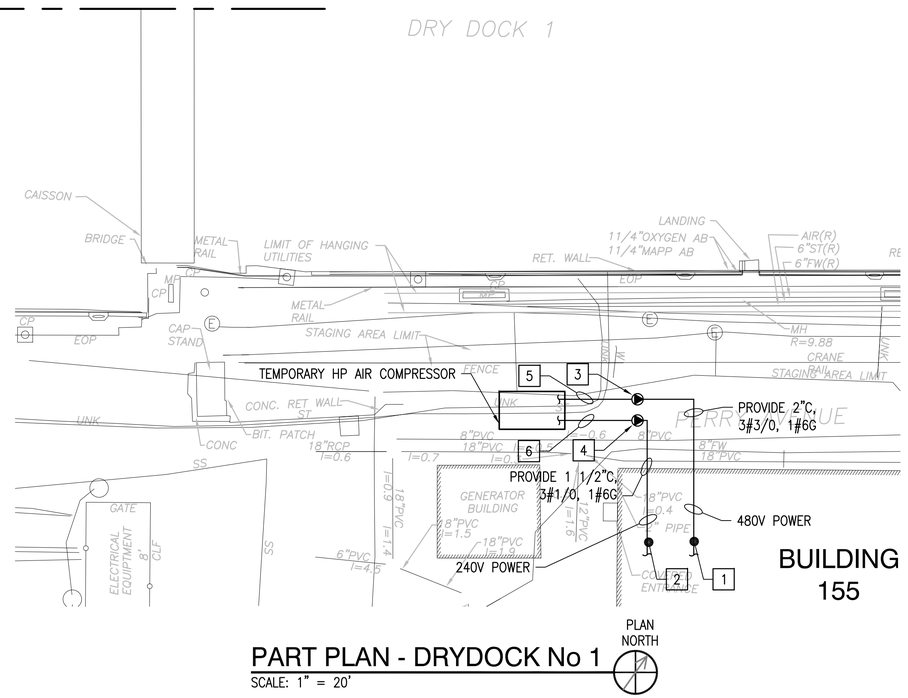

PART PLAN - DRYDOCK No 1

SCALE: 1" = 20'

PLAN NORTH

GENERAL NOTES

1. COORDINATE WITH SHIPYARD TO REMOVE ALL TEMPORARY ELECTRICAL AND COMMUNICATIONS EQUIPMENT, RACEWAYS AND WIRING WITHIN PROJECT LIMITS THAT WILL INTERFERE WITH CONSTRUCTION. FIELD VERIFY EXACT EQUIPMENT & LOCATIONS AND COORDINATE WITH THE APPROPRIATE SHIPYARD USER GROUPS.
2. DEMOLITION KEYNOTE Nos 1, 2 & 3 SHALL BE PERFORMED PRIOR TO PHASE 1 CONSTRUCTION. DEMOLITION KEYNOTE No 4 SHALL BE PERFORMED PRIOR TO PHASE 2 CONSTRUCTION UPON COMPLETION OF PHASE 2 CONSTRUCTION, ALL SYSTEMS DISRUPTED AS PART OF DEMOLITION KEYNOTE No 3 SHALL BE RESTORED TO THEIR ORIGINAL OPERATIONAL CONDITIONS. FOR REINSTALLATION OF WHEELER LINE & ITS HEAT TRACING, SEE SHEET E-502.
3. FOR LOCATIONS OF NEW LUMINAIRES TO BE INSTALLED ON WARNING SIGNS, SEE SHEETS E-103 & E-104.
4. NEW WORK KEYNOTE Nos 1, 2, 3, 4, 5 & 6 RELATE TO PROVIDING POWER TO THE TEMPORARY 480V, 3PH, 75HP AIR COMPRESSOR AND ASSOCIATED 240V, 30A, 1PH UTILITY SUPPLY SERVING COMPRESSOR INDICATED ON SHEETS M-104 AND M-105.

DEMOLITION KEYNOTES

1. DISCONNECT, REMOVE AND DISPOSE OF ALL WALL PACK LIGHTS MOUNTED ON THE WARNING SIGNS THAT ARE FED FROM THE EXISTING CONDUIT RUN ALONG THE TIMBER SURFACE. FOR THE WARNING SIGNS WITH EXISTING SOLAR POWER WALL PACK LIGHTS, THE SOLAR POWER WALL PACK LIGHTS ARE TO BE RETURNED TO PNSY.
2. DISCONNECT, REMOVE AND DISPOSE OF RACEWAYS & WIRING RUN ALONG THE TIMBER SURFACE SERVING THE WALL PACK LIGHTS MOUNTED ON THE WARNING SIGNS.
3. DISCONNECT AND RELOCATE RACEWAYS (CONDUIT QUANTITIES VARY FROM 1-3 DEPENDING ON LOCATION) RUN ALONG TIMBER SURFACE SERVING SEWER & WATER PIPING HEAT TRACING FROM PANEL "HTCP-11E" TO CONCRETE DECK TO AVOID INTERFERENCE WITH CONSTRUCTION. RECONNECT WIRING TO EXISTING POWER CONNECTION BOXES AND VERIFY OPERATION OF HEAT TRACING SYSTEM.
4. PORTION OF WHEELER LINE THAT IS TO BE REPOSITIONED FOR PHASE 2 CONSTRUCTION FOR WORK ON THE HEAT TRACING OF THE WHEELER LINE, SEE DIAGRAM ON SHEET E-502. FOR PHASING AND DETAILS OF WHEELER LINE WORK, SEE SHEETS M-101, M-102, M-103.

NEW WORK KEYNOTES

1. COORDINATE WITH PNSY AND PROVIDE 200A, 480V, 3P CIRCUIT BREAKER IN EXISTING 480V, 3PH PANEL IN BUILDING 155. FIELD VERIFY PANEL WITH PNSY.
2. COORDINATE WITH PNSY AND PROVIDE 30A, 240V, 2P CIRCUIT BREAKER IN EXISTING 120/240V, 1PH PANEL IN BUILDING 155. FIELD VERIFY PANEL WITH PNSY.
3. PROVIDE 200A, 3P, NEMA 4X TWIST-LOCK RECEPTACLE WITH INTEGRAL CIRCUIT BREAKER (EMERSON POWERTITE OR EQUAL). PROVIDE STAINLESS STEEL SUPPORTS FOR RECEPTACLE.
4. PROVIDE 30A, 3P, NEMA 4X TWIST-LOCK RECEPTACLE WITH INTEGRAL CIRCUIT BREAKER (EMERSON POWERTITE OR EQUAL). PROVIDE STAINLESS STEEL SUPPORTS FOR RECEPTACLE.
5. PROVIDE 100' 3#3/0, 1#6G SOOW CORD WITH PLUG TO MATCH RECEPTACLE.
6. PROVIDE 100' 3#6, 1#10G SOOW CORD WITH PLUG TO MATCH RECEPTACLE.

KEY PLAN

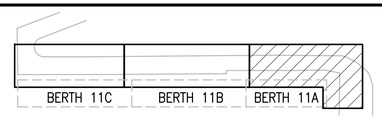

GRAPHIC SCALE

1"=20'

20' 0 20' 40'

CHECK GRAPHIC SCALE BEFORE USING

APPR	DATE	DESCRIPTION	MK'S

NAVFAC

COMMONWEALTH OF MASSACHUSETTS — BARRY D. SQUIRE — ELECTRICAL — REGISTERED PROFESSIONAL ENGINEER — 03/01/16 — SEAL

MNFST A JOINT VENTURE — A/E INFO

APPROVED (Commander Signature): David W. Thurfield — FOR COMMANDER NAVFAC

ACTIVITY: PER DOCUMENT FROM PNSY CODE 980, KITTERY ME

SATISFACTORY TO DATE: 05/09/16

DES: DPF | DRW: DPF | CHK: BDS

PM/DM: NATHAN LIBBY

BRANCH MANAGER: NATHAN MAHER

LEAD/PM&E: AMIN BAHROUR

FIRE PROTECTION: N/A

DEPARTMENT OF THE NAVY
NAVAL FACILITIES ENGINEERING COMMAND
PUBLIC WORKS DEPARTMENT - MAINE
PORTSMOUTH NAVAL SHIPYARD

NAVAL FACILITIES ENGINEERING COMMAND ~ MID-ATLANTIC
NAVAL SHIPYARD ~ PORTSMOUTH, NH
KITTERY, MAINE

STRUCTURAL REPAIRS AT BERTHS 11A, 11B AND 11C

ELECTRICAL PLAN - SHEET 1 OF 2

EPROJECT NO.: 1356489

CONSTR. CONTR. NO. N40085-XX-C-XXXX

NAVFAC DRAWING NO. 12716127

SHEET 131 OF 144

E-101 | FP2-16-767

DRAWFORM REVISION: 10 OCTOBER 2014

FILE NAME: S:\1794\Active\1794102031\TP-104A PNSY Lifting Study\TP-104A PNSY Lifting Study\02 CAD\12 Electrical\FP2-16-768.dwg LAYOUT NAME: ELECTRICAL PLAN - SHEET 1 OF 2 PLOTTED: Friday, May 13, 2016 - 3:04pm USER: cgoodridge

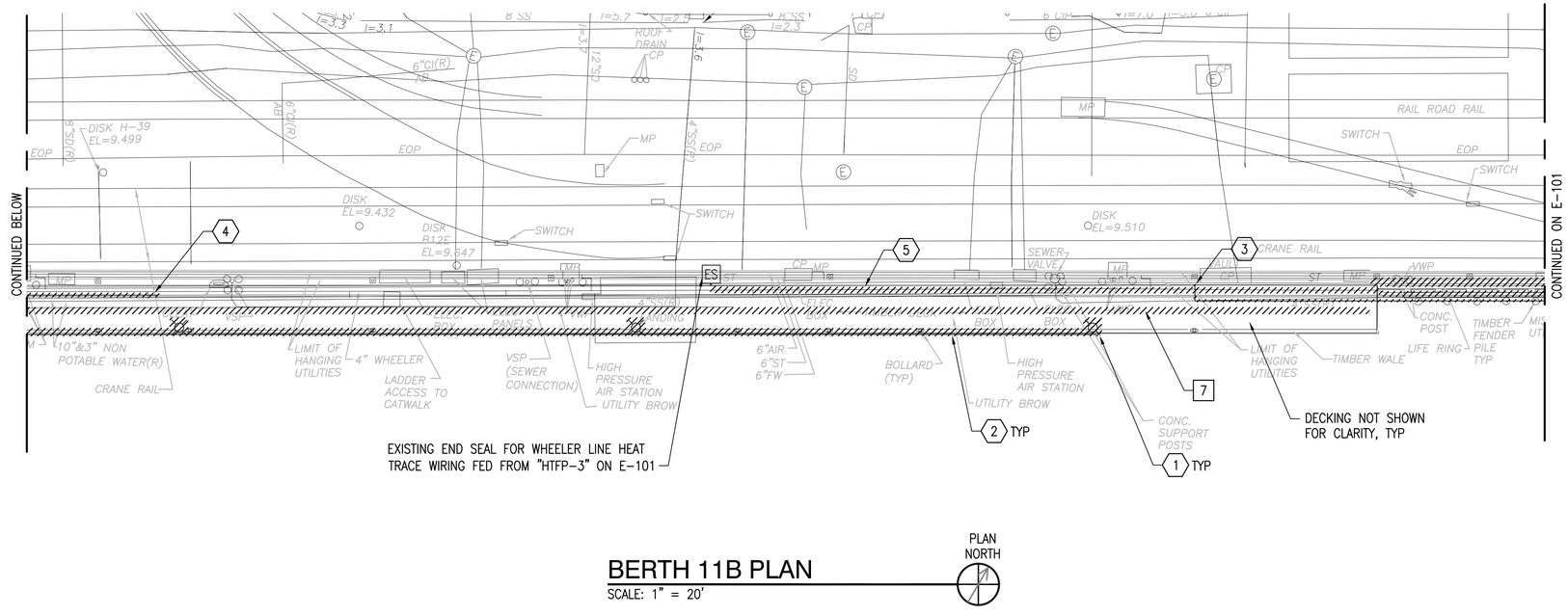

BERTH 11B PLAN

SCALE: 1" = 20'

PLAN NORTH

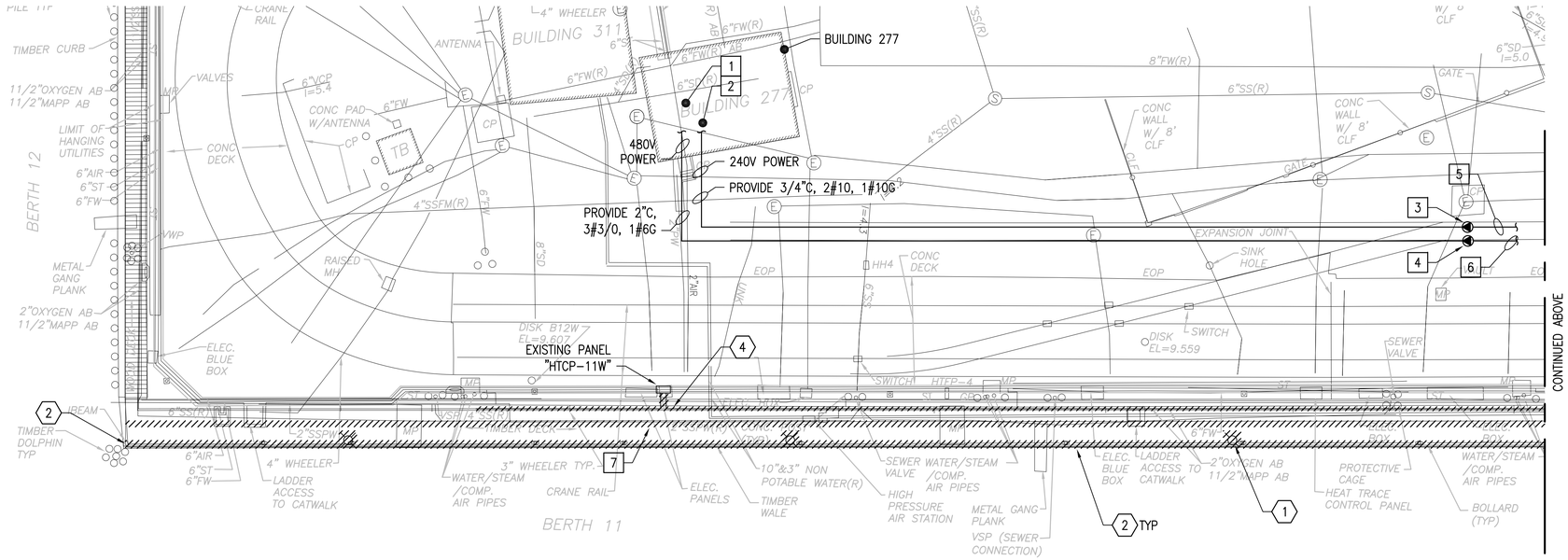

BERTH 11C PLAN

SCALE: 1" = 20'

PLAN NORTH

GENERAL NOTES:

1. COORDINATE WITH SHIPYARD TO REMOVE ALL TEMPORARY ELECTRICAL AND COMMUNICATIONS EQUIPMENT, RACEWAYS AND WIRING WITHIN PROJECT LIMITS THAT WILL INTERFERE WITH CONSTRUCTION. FIELD VERIFY EXACT EQUIPMENT & LOCATIONS AND COORDINATE WITH THE APPROPRIATE SHIPYARD USER GROUPS.
2. DEMOLITION KEYNOTE Nos 1, 2, 3 & 4 SHALL BE PERFORMED PRIOR TO PHASE 1 CONSTRUCTION. DEMOLITION KEYNOTE No 5 SHALL BE PERFORMED PRIOR TO PHASE 2 CONSTRUCTION. UPON COMPLETION OF PHASE 2 CONSTRUCTION, ALL SYSTEMS DISRUPTED AS PART OF DEMOLITION KEYNOTE No 3 SHALL BE RESTORED TO THEIR ORIGINAL OPERATIONAL CONDITIONS. UPON COMPLETION OF PHASE 3 CONSTRUCTION, ALL SYSTEMS DISRUPTED AS PART OF DEMOLITION KEYNOTE No 4 SHALL BE RESTORED TO THEIR ORIGINAL OPERATIONAL CONDITIONS
3. SEE GENERAL NOTE No 4 ON E-101 FOR WORK RELATING TO PROVIDING POWER TO TEMPORARY 480V, 3PH, 75 AIR COMPRESSOR.
4. FOR LOCATIONS OF NEW LUMINAIRES TO BE INSTALLED ON WARNING SIGNS, SEE SHEETS E-103 & E-104.
5. FOR REINSTALLATION OF WHEELER LINE & HEAT TRACING, SEE SHEET E-502.

DEMOLITION KEYNOTES:

1. DISCONNECT, REMOVE AND DISPOSE OF ALL WALL PACK LIGHTS MOUNTED ON THE WARNING SIGNS THAT ARE FED FROM THE EXISTING CONDUIT RUN ALONG THE PLATFORM.
2. DISCONNECT, REMOVE AND DISPOSE OF RACEWAYS & WIRING RUN ALONG THE PLATFORM SERVING THE WALL PACK LIGHTS MOUNTED ON THE WARNING SIGNS. CAP CONDUIT AT WESTERN EDGE OF PLATFORM AT BERTH 11C. MAINTAIN EXISTING POWER FEED TO HARD WIRED LIGHTS ON THE WARNING SIGNS ON BERTHS 12 & 13 FED FROM THE SAME CONDUIT AS THE HARD WIRED LIGHTS ALONG BERTHS 11C & 11B.
3. DISCONNECT AND RELOCATE RACEWAYS RUN ALONG TIMBER SURFACE AND PLATFORM SERVING WATER PIPING HEAT TRACING FROM PANEL "HTCP-11E" TO CONCRETE DECK TO AVOID INTERFERENCE WITH CONSTRUCTION. RECONNECT WIRING TO EXISTING POWER CONNECTION BOXES AND VERIFY OPERATION OF HEAT TRACING SYSTEM.
4. DISCONNECT AND RELOCATE RACEWAYS RUN ALONG TIMBER SURFACE AND PLATFORM SERVING WATER PIPING HEAT TRACING FROM PANEL "HTCP-11W" TO CONCRETE DECK TO AVOID INTERFERENCE WITH CONSTRUCTION. RECONNECT WIRING TO EXISTING POWER CONNECTION BOXES AND VERIFY OPERATION OF HEAT TRACING SYSTEM
5. PORTION OF WHEELER LINE THAT IS TO BE REPOSITIONED FOR PHASE 1 CONSTRUCTION FOR WORK ON THE HEAT TRACING OF THE WHEELER LINE, SEE DIAGRAM ON SHEET E-502. FOR PHASING AND DETAILS OF WHEELER LINE WORK, SEE SHEETS M-101, M-102, M-103.

NEW WORK KEYNOTES:

1-6. REFER TO NEW WORK KEYNOTES ON E-101, REPLACING "BUILDING 155" WITH "BUILDING 277"

7. DISCONNECT EXISTING LOOSE COMMUNICATIONS WIRING RUN UNDERNEATH PLATFORM. RELOCATE WIRING TO TOP OF PLATFORM. REESTABLISH ALL EXISTING WIRING CONNECTIONS. TYPICAL WIRING (VARIES BY LOCATION) INCLUDES (2) SINGLE MODE FIBER OPTIC CABLES, AND (1) TELEPHONE CABLE. FIELD VERIFY ALL LOOSE CABLES TO RELOCATED.

KEY PLAN

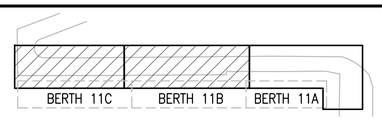

GRAPHIC SCALE

1"=20'

20' 0 20' 40'

CHECK GRAPHIC SCALE BEFORE USING

NO.	DESCRIPTION	DATE	APPR

NAVFAC

COMMONWEALTH OF MASSACHUSETTS — BARRY R. SQUIRE — ELECTRICAL — PROFESSIONAL ENGINEER — 03/04/16 — SEAL

MNFST A JOINT VENTURE — A/E INFO

APPROVED for Commander
David W. Kruzfield
FOR COMMANDER NAVFAC

ACTIVITY: PER DOCUMENT FROM PNSY, CODE 980, KITTERY ME

SATISFACTORY TO — DATE: 05/09/16

DES: DPF | DRW: DPF | CHK: BDS

PM/DM: NATHAN LIBBY

BRANCH MANAGER: NATHAN MAHER

FEAD/PM&E: AMIN BAHROUR

FIRE PROTECTION: N/A

DEPARTMENT OF THE NAVY
NAVAL FACILITIES ENGINEERING COMMAND
PUBLIC WORKS DEPARTMENT - MAINE
PORTSMOUTH NAVAL SHIPYARD

NAVAL FACILITIES ENGINEERING COMMAND – MID-ATLANTIC
NAVAL SHIPYARD – PORTSMOUTH, NH
KITTERY, MAINE

STRUCTURAL REPAIRS AT BERTHS 11A, 11B AND 11C

ELECTRICAL PLAN – SHEET 2 OF 2

EPROJECT NO.: 1356489

CONSTR. CONTR. NO.: N40085-XX-C-XXXX

NAVFAC DRAWING NO.: 12716128

SHEET 132 OF 144

E-102 | FP2-16-768

DRAWFORM REVISION: 10 OCTOBER 2014

FILE NAME: S:\1794\Active\1794102037\VTP-104A PNSY Lifting Study\VTP-104A PNSY Lifting Study\02 CADD\12 Electrical\FP2-16-768.dwg LAYOUT NAME: ELECTRICAL PLAN – SHEET 2 OF 2 PLOTTED: Friday, May 13, 2016 – 3:05pm USER: cgoodridge

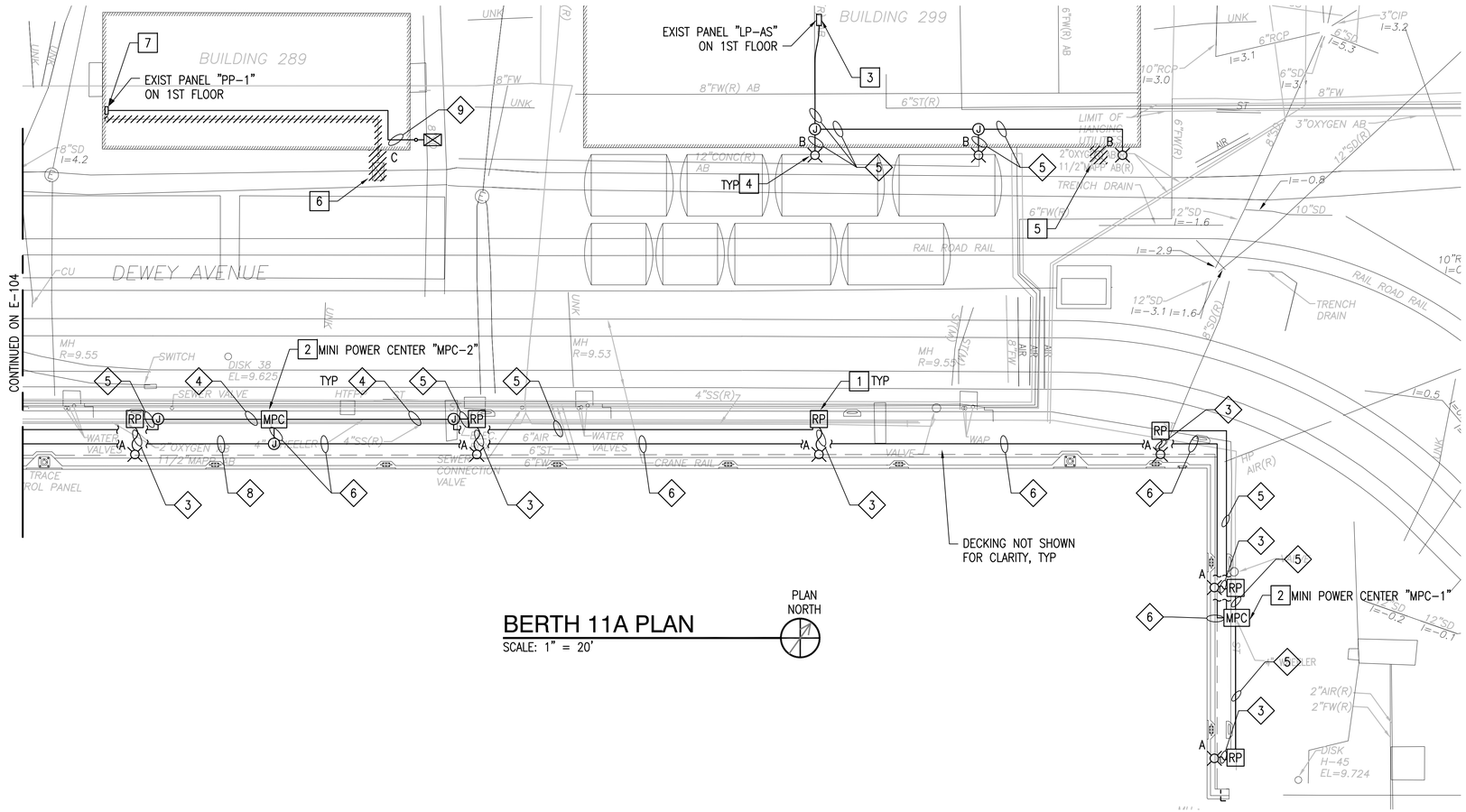

BERTH 11A PLAN

SCALE: 1" = 20'

PLAN NORTH

GENERAL NOTES

1. FOR LUMINAIRE SCHEDULE, WIRING DIAGRAM AND CONTROL DIAGRAM SEE SHEET E-503.
2. " ◇f ▷ " INDICATES CONDUIT AND WIRE SIZING. REFER TO CONDUIT AND WIRING SCHEDULE ON SHEET E-502.
3. ALL OUTDOOR RIGID CONDUITS SHALL BE PVC COATED RIGID GALVANIZED STEEL.
4. EXISTING WARNING SIGNS SHALL BE MAINTAINED DURING CONSTRUCTION. PROVIDE TEMPORARY LIGHTING AS NEEDED FOR WARNING SIGNS DURING CONSTRUCTION TO MAINTAIN OPERATION.

☐ NEW WORK KEYNOTES

1. PROVIDE RECEPTACLE POST AS DETAILED ON SHEET E-502.
2. FOR TYPICAL MINI POWER CENTER SCHEDULE AND NOTES, SEE SHEET E-601.
3. UTILIZE EXISTING SPARE 20A,1P CIRCUIT BREAKER IN 120/208V, 3PH, 4W 100A PANEL "LP-A5" IN BUILDING 299 TO POWER TYPE "B" LUMINAIRES.
4. PROVIDE TYPE "B" LUMINAIRES ON EXTERIOR OF BUILDING 299, 2' BELOW EDGE OF HIGH ROOF.
5. DEMOLISH EXISTING WALLPACK LUMINAIRE ON EXTERIOR OF BUILDING 299.
6. DEMOLISH EXISTING 30' TRIPOD MOUNTED AREA LUMINAIRE AND ASSOCIATED RACEWAYS, WIRING, DISCONNECT SWITCH AND CONTROLS.
7. UTILIZE EXISTING SPARE 20A,1P CIRCUIT BREAKER IN 120/208V, 3PH, 4W 100A PANEL "PP-1" IN BUILDING 289 TO POWER TYPE "C" LUMINAIRE.

KEY PLAN

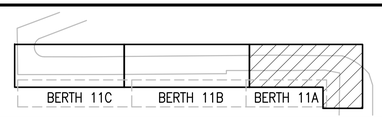

GRAPHIC SCALE

1"=20' 20' 0 20' 40'

CHECK GRAPHIC SCALE BEFORE USING

APPR	DATE	DESCRIPTION	SYM

NAVFAC

COMMONWEALTH OF MASSACHUSETTS — BARRY E. SQUIBB — ELECTRICAL — PROFESSIONAL ENGINEER — 03/01/16 — SEAL

MNFST A JOINT VENTURE — A/E INFO

APPROVED: David W. Trumfield — FOR COMMANDER NAVFAC

ACTIVITY: PER DOCUMENT FROM PNSY CODE 980, KITTERY ME

SATISFACTORY: 10 DATE: 05/09/16

DES	DPF	DRW	DPF	CHK	BDS

PM/DM: NATHAN LIBBY

BRANCH MANAGER: NATHAN MAHER

FEAD/PM&E: AMIN BAHROUR

FIRE PROTECTION: N/A

DEPARTMENT OF THE NAVY
NAVAL FACILITIES ENGINEERING COMMAND
PUBLIC WORKS DEPARTMENT - MAINE
PORTSMOUTH NAVAL SHIPYARD

NAVAL FACILITIES ENGINEERING COMMAND – MID-ATLANTIC
NAVAL SHIPYARD - PORTSMOUTH, NH — KITTERY, MAINE

STRUCTURAL REPAIRS AT BERTHS 11A, 11B AND 11C

SECURITY LIGHTING & POWER PLAN – SHEET 1 OF 2

EPROJECT NO.: 1356489

CONSTR. CONTR. NO.: N40085-XX-C-XXXX

NAVFAC DRAWING NO.: 12716129

SHEET 133 OF 144

E-103 | FP2-16-769

DRAWFORM REVISION: 10 OCTOBER 2014

FILE NAME: S:\1794\Active\179410203\V\TP-104A PNSY Lifting Study\TP-104A PNSY Lifting Study\02 CAD\12 Electrical\FP2-16-770.dwg LAYOUT NAME: SECURITY LIGHTING & POWER PLAN – SHEET 1 OF 2 PLOTTED: Friday, May 13, 2016 – 3:05pm USER: cgoodridge

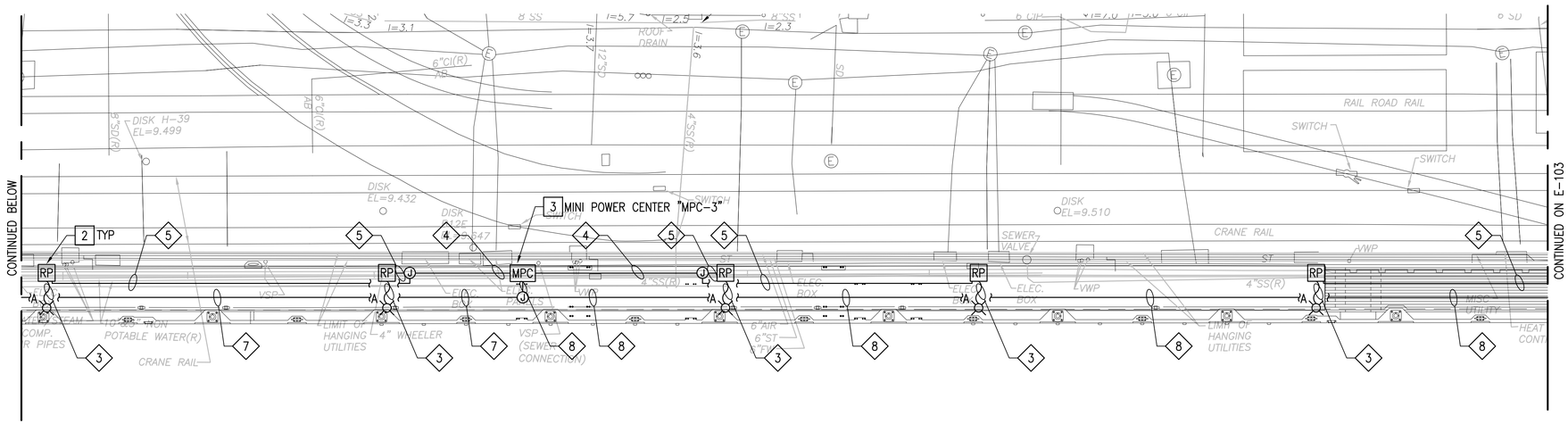

BERTH 11B PLAN

SCALE: 1" = 20'

PLAN NORTH

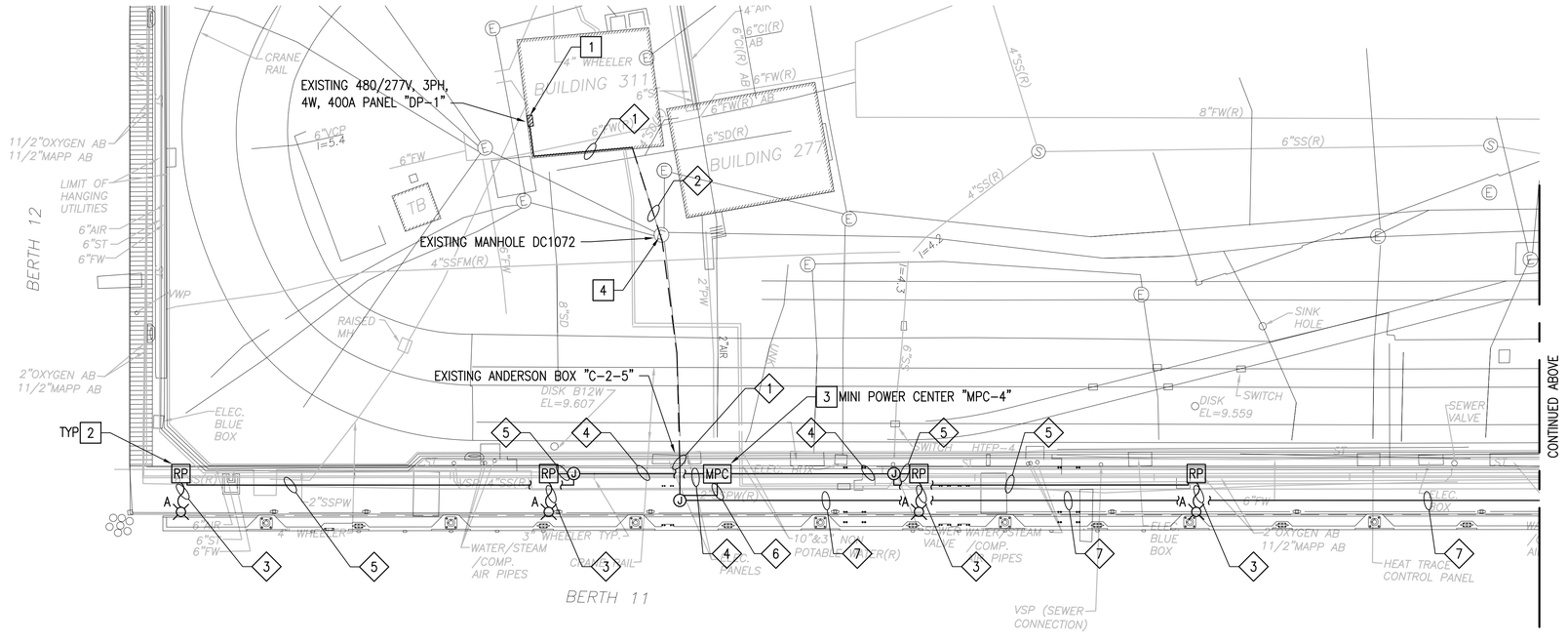

BERTH 11C PLAN

SCALE: 1" = 20'

PLAN NORTH

GENERAL NOTES:

1. FOR LUMINAIRE SCHEDULE, WIRING DIAGRAM AND CONTROL DIAGRAM SEE SHEET E-503.
2. "◇" INDICATES CONDUIT AND WIRE SIZING. REFER TO CONDUIT AND WIRING SCHEDULE ON SHEET E-502.
3. ALL OUTDOOR RIGID CONDUITS SHALL BE PVC COATED RIGID GALVANIZED STEEL.
4. EXISTING WARNING SIGNS SHALL BE MAINTAINED DURING CONSTRUCTION. PROVIDE TEMPORARY LIGHTING AS NEEDED FOR WARNING SIGNS DURING CONSTRUCTION TO MAINTAIN OPERATION.

DUCT INVESTIGATION NOTES

1. PROVIDE FIELD INVESTIGATIONS FOR ALL EXISTING DUCTS AND MANHOLES INDICATED FOR USE. THE INVESTIGATIONS SHALL BE COMPLETED AND HAVE VERIFIED THE DUCTS AND MANHOLES ARE FIT FOR USE PRIOR TO PROVIDING THE PROPOSED WIRING THROUGH THE EXISTING DUCTS AND MANHOLES.
2. EACH MANHOLE SHALL BE INVESTIGATED TO VERIFY WHICH DUCTS ARE OPEN AND AVAILABLE FOR USE.
3. THE DUCTS THAT ARE VERIFIED TO BE OPEN AND AVAILABLE FOR USE SHALL BE TESTED TO VERIFY THAT THEY ARE CLEAR OVER THE ENTIRE LENGTH OF THE DUCT.

☐ NEW WORK KEYNOTES:

1. PROVIDE (4) 20A,2P CIRCUIT BREAKERS IN EXISTING SPACES IN PANEL "DP-1" TO SERVE MINI POWER CENTERS. MATCH EXISTING CIRCUIT BREAKER MANUFACTURER AND TYPE. EACH CIRCUIT BREAKER SHALL BE DEDICATED TO (1) MINI POWER CENTER.
2. PROVIDE RECEPTACLE POST AS DETAILED ON SHEET E-502.
3. FOR TYPICAL MINI POWER CENTER SCHEDULE AND NOTES, SEE SHEET E-601.
4. PROVIDE 5 SF OF TYPE B CONCRETE REPAIRS TO INTERIOR OF ELECTRIC MANHOLE, SEE SHEET S-517 FOR REPAIR DETAILS.

KEY PLAN

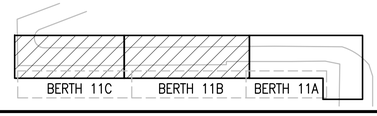

GRAPHIC SCALE

1"=20' 20' 0 20' 40'

CHECK GRAPHIC SCALE BEFORE USING

APPR	DATE	DESCRIPTION	STA

NAVFAC

COMMONWEALTH OF MASSACHUSETTS
BARRY R. SQUIRE
ELECTRICAL
No. 39552
REGISTERED
PROFESSIONAL ENGINEER
05/09/16
SEAL

MNFST
A JOINT VENTURE
A/E INFO

APPROVED
David W. Grunfeld
FOR COMMANDER NAVFAC

ACTIVITY:
PER DOCUMENT FROM PNSY
CODE 980, KITTERY ME

SATISFACTORY TO DATE: 05/09/16

DES	DPF	DRW	DPF	CHK	BDS

PM/DM: NATHAN LIBBY
BRANCH MANAGER: NATHAN MAHER
FEAD/PM&E: AMIN BAHROUR
FIRE PROTECTION: N/A

DEPARTMENT OF THE NAVY
PUBLIC WORKS DEPARTMENT - MAINE
NAVAL FACILITIES ENGINEERING COMMAND
NAVAL FACILITIES ENGINEERING COMMAND - MID-ATLANTIC
NAVAL SHIPYARD - PORTSMOUTH, NH
PORTSMOUTH NAVAL SHIPYARD
KITTERY, MAINE

STRUCTURAL REPAIRS AT BERTHS 11A, 11B AND 11C

SECURITY LIGHTING & POWER PLAN - SHEET 2 OF 2

EPROJECT NO.: 1356489

CONSTR. CONTR. NO.
N40085-XX-C-XXXX

NAVFAC DRAWING NO.
12716130

SHEET 134 OF 144

E-104 | FP2-16-770

DRAWFORM REVISION: 10 OCTOBER 2014

FILE NAME: S:\1794\Active\179410203\V\TP-104A PNSY Lifting Study\TP-104A PNSY Lifting Study\02 CAD\12 Electrical\FP2-16-770.dwg LAYOUT NAME: SECURITY LIGHTING & POWER PLAN - SHEET 2 OF 2 PLOTTED: Friday, May 13, 2016 - 3:05pm USER: cgoodridge

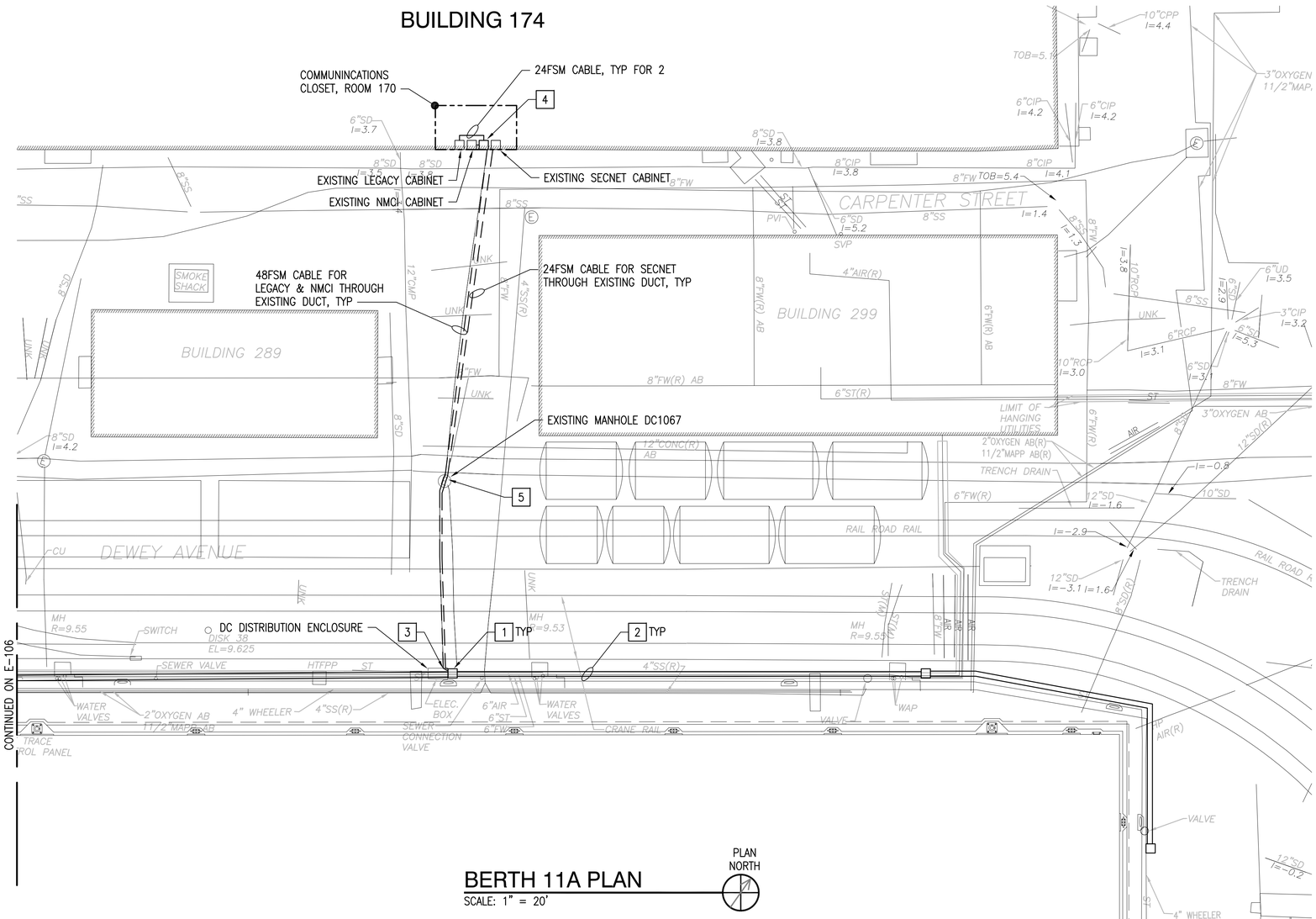

GENERAL NOTES

1. OUTDOOR CONDUITS SHALL BE PVC COATED RGS, UNLESS NOTED OTHERWISE. EXTENSIONS TO EXTERIOR PATCH PANEL ENCLOSURES SHALL BE MADE WITH LFNC-B CONDUIT.
2. FIBER OPTIC CABLE TYPE SHALL BE SINGLE MODE, MIL-SPEC, ARMORED, TIGHT TUBE, GEL-FREE CABLE.
3. FOR ANY ADDITIONAL QUESTIONS ON ACCEPTABLE FIBER RELATED EQUIPMENT MODEL NUMBERS, COORDINATE WITH CHRIS WILLARD AT 207-205-9865.

ABBREVIATIONS

F FIBER
SM SINGLE MODE

DUCT INVESTIGATION NOTES

1. PROVIDE FIELD INVESTIGATIONS FOR ALL EXISTING DUCTS AND MANHOLES INDICATED FOR USE. THE INVESTIGATIONS SHALL BE COMPLETED AND HAVE VERIFIED THE DUCTS AND MANHOLES ARE FIT FOR USE PRIOR TO PROVIDING THE PROPOSED WIRING THROUGH THE EXISTING DUCTS AND MANHOLES.
2. EACH MANHOLE SHALL BE INVESTIGATED TO VERIFY WHICH DUCTS ARE OPEN AND AVAILABLE FOR USE.
3. THE DUCTS THAT ARE VERIFIED TO BE OPEN AND AVAILABLE FOR USE SHALL BE TESTED TO VERIFY THAT THEY ARE CLEAR OVER THE ENTIRE LENGTH OF THE DUCT.

☐ NEW WORK KEYNOTES

1. PROVIDE 18"Hx16"Wx8"D NEMA 4X ENCLOSURE ON STAINLESS STEEL SUPPORT WITH FUSION SPLICE TRAYS AND TERMINATION CABINET FOR SECNET, LEGACY AND NMCI TERMINATIONS. PROVIDE LIQUID TIGHT CONNECTORS INSIDE ENCLOSURE. COORDINATE WITH CHRIS WILLARD AT 207-205-9865 FOR MODEL NUMBERS OF EQUIPMENT REQUIRED INSIDE ENCLOSURE.
2. PROVIDE 48FSM CABLE FOR LEGACY & NMCI NETWORKS IN 1 1/2"C BETWEEN NEW PATCH PANEL ENCLOSURES. PROVIDE 24FSM CABLE FOR SECNET IN 1"C BETWEEN NEW PATCH PANEL ENCLOSURES.
3. EXTEND 48FSM CABLE FOR LEGACY & NMCI NETWORKS IN 1 1/2"C FROM DC DISTRIBUTION ENCLOSURE TO NEW PATCH PANEL ENCLOSURE. EXTEND 24FSM CABLE FOR SECNET IN 1"C FROM DC DISTRIBUTION ENCLOSURE TO NEW PATCH PANEL ENCLOSURE.
4. PROVIDE CORNING CCH-02U PATCH PANEL OR EQUAL FOR BREAKOUT OF NMCI & LEGACY FIBER CABLING. PROVIDE 1#6G FROM PANEL AND BOND TO NEAREST BUILDING GROUNDING ELECTRODE CONDUCTOR.
5. PROVIDE 5 SF OF TYPE B CONCRETE REPAIR ON INTERIOR OF ELECTRIC MANHOLE, SEE SHEET S-517 FOR REPAIR DETAILS.

KEY PLAN

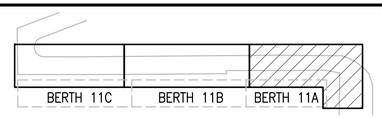

GRAPHIC SCALE

1"=20' 20' 0 20' 40'

CHECK GRAPHIC SCALE BEFORE USING

APPR	DATE	DESCRIPTION	STM

NAVFAC

COMMONWEALTH OF MASSACHUSETTS BARRY S. SQUIBB ELECTRICAL NO. 36,116 REGISTERED PROFESSIONAL ENGINEER 03/01/16 SEAL

MN FST A JOINT VENTURE A/E INFO

APPROVED David W. Thurnfield FOR COMMANDER NAVFAC

ACTIVITY: PER DOCUMENT FROM PNSY CODE 980, KITTERY ME

SATISFACTORY TO DATE: 05/09/14

DES: DPF DRW: DPF CHK: BDS

PM/DM: NATHAN LIBBY

BRANCH MANAGER: NATHAN MAHER

FEAD/PM&E: AMIN BAHROUR

FIRE PROTECTION: N/A

DEPARTMENT OF THE NAVY
NAVAL FACILITIES ENGINEERING COMMAND
PUBLIC WORKS DEPARTMENT - MAINE
PORTSMOUTH NAVAL SHIPYARD

NAVAL FACILITIES ENGINEERING COMMAND ~ MID-ATLANTIC
NAVAL SHIPYARD ~ PORTSMOUTH, NH
KITTERY, MAINE

STRUCTURAL REPAIRS AT BERTHS 11A, 11B AND 11C

FIBER OPTIC RING PLAN ~ SHEET 1 OF 2

EPROJECT NO.: 1356489

CONSTR. CONTR. NO. N40085-XX-C-XXXX

NAVFAC DRAWING NO. 12716131

SHEET 135 OF 144

E-105 | FP2-16-771

DRAWFORM REVISION: 10 OCTOBER 2014

FILE NAME: S:\1794\Active\179410203\V\TP-104A PNSY Lifting Study\TP-104A PNSY Lifting Study\02 CAD\12 Electrical\FP2-16-772.dwg LAYOUT NAME: FIBER OPTIC RING PLAN - SHEET 1 OF 2 PLOTTED: Friday, May 13, 2016 - 3:06pm USER: cgoodridge

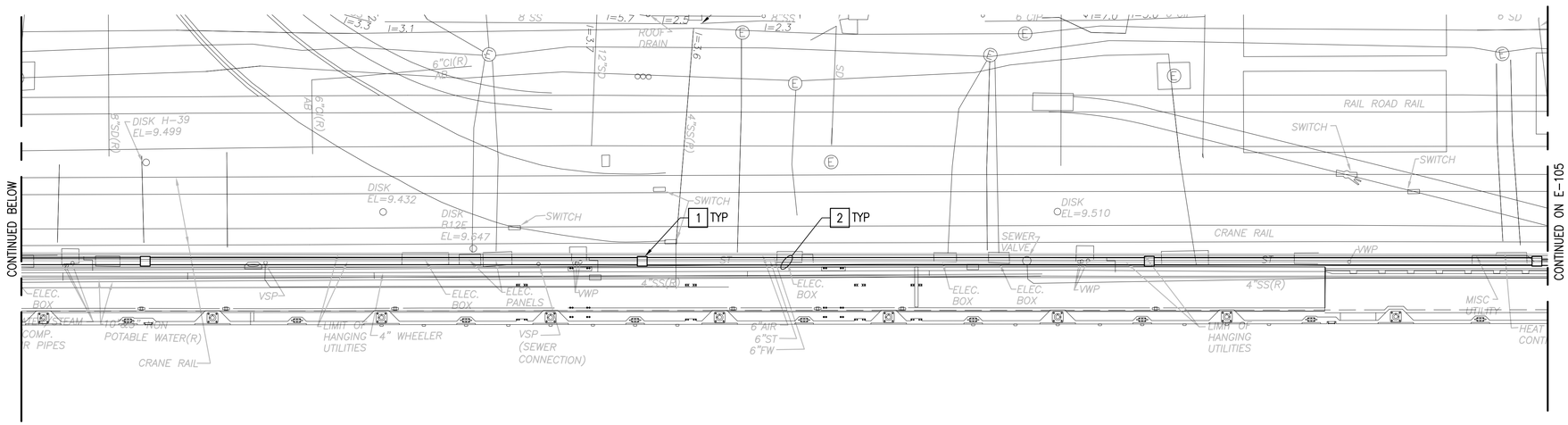

BERTH 11B PLAN

SCALE: 1" = 20'

PLAN NORTH

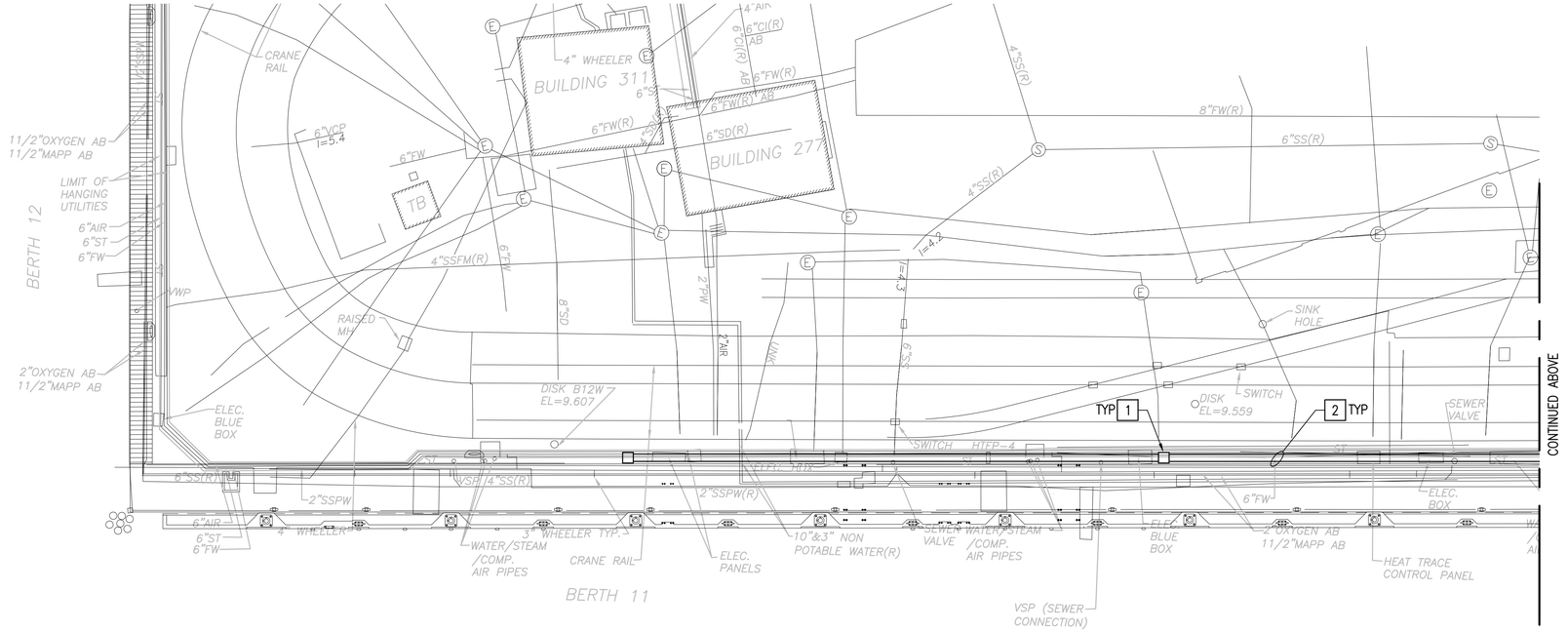

BERTH 11C PLAN

SCALE: 1" = 20'

PLAN NORTH

GENERAL NOTES:

1. OUTDOOR CONDUITS SHALL BE PVC COATED RGS, UNLESS NOTED OTHERWISE. EXTENSIONS TO EXTERIOR PATCH PANEL ENCLOSURES SHALL BE MADE WITH LFNC-B CONDUIT.
2. FIBER OPTIC CABLE TYPE SHALL BE SINGLE MODE, MIL-SPEC, ARMORED, TIGHT TUBE, GEL-FREE CABLE.
3. FOR ANY ADDITIONAL QUESTIONS ON ACCEPTABLE FIBER RELATED EQUIPMENT MODEL NUMBERS, COORDINATE WITH CHRIS WILLARD AT 207-205-9865.

FIBER PLANS ABBREVIATIONS

F FIBER
SM SINGLE MODE

NEW WORK KEYNOTES:

1. PROVIDE 18"Hx16"Wx8"D NEMA 4X ENCLOSURE ON STAINLESS STEEL SUPPORT WITH FUSION SPLICE TRAYS AND TERMINATION CABINET FOR SECNET, LEGACY AND NMCI TERMINATIONS. PROVIDE LIQUID TIGHT CONNECTORS INSIDE ENCLOSURE. COORDINATE WITH CHRIS WILLARD AT 207-205-9865 FOR MODEL NUMBERS OF EQUIPMENT REQUIRED INSIDE ENCLOSURE.
2. PROVIDE 48FSM CABLE FOR LEGACY & NMCI NETWORKS IN 1 1/2 "C BETWEEN NEW PATCH PANEL ENCLOSURES. PROVIDE 24FSM CABLE FOR SECNET IN 1"C BETWEEN NEW PATCH PANEL ENCLOSURES.

KEY PLAN

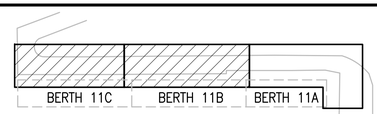

GRAPHIC SCALE

1"=20' 20' 0 20' 40'

CHECK GRAPHIC SCALE BEFORE USING

APPR	DATE	DESCRIPTION	SYM

NAVFAC

COMMONWEALTH OF MASSACHUSETTS
BARRY E. SQUIBB
ELECTRICAL
No. 31355
REGISTERED
PROFESSIONAL ENGINEER
05/04/16
SEAL

MNFST A JOINT VENTURE
A/E INFO

APPROVED
Commander
David W. Thurfield
FOR COMMANDER NAVFAC

ACTIVITY:
PER DOCUMENT FROM PNSY
CODE 980, KITTERY ME

SATISFACTORY TO DATE: 05/09/16

DES: DPF DRW: DPF CHK: BDS

PM/DM: NATHAN LIBBY

BRANCH MANAGER: NATHAN MAHER

LEAD/PM&E: AMIN BAHROUR

FIRE PROTECTION: N/A

DEPARTMENT OF THE NAVY
NAVAL FACILITIES ENGINEERING COMMAND
PUBLIC WORKS DEPARTMENT - MAINE
PORTSMOUTH NAVAL SHIPYARD

NAVAL FACILITIES ENGINEERING COMMAND ~ MID-ATLANTIC
NAVAL SHIPYARD ~ PORTSMOUTH, NH

KITTERY, MAINE

STRUCTURAL REPAIRS
AT BERTHS 11A, 11B AND 11C

FIBER OPTIC RING PLAN ~ SHEET 2 OF 2

EPROJECT NO.: 1356489

CONSTR. CONTR. NO.
N40085-XX-C-XXXX

NAVFAC DRAWING NO.
12716132

SHEET 136 OF 144

E-106 FP2-16-772

DRAWFORM REVISION: 10 OCTOBER 2014

FILE NAME: S:\1794\Active\1794102031\TP-104A PNSY Lifting Study\TP-104A PNSY Lifting Study\02 CAD\12 Electrical\FP2-16-772.dwg LAYOUT NAME: FIBER OPTIC RING PLAN - SHEET 2 OF 2 PLOTTED: Friday, May 13, 2016 - 3:06pm USER: cgoodridge

BERTH 11A PLAN

SCALE: 1" = 20'

GENERAL NOTES

1. ALL FUSES SHALL BE BY TII NETWORK TECHNOLOGIES OR EQUAL, BLACK FOR ANALOG TELEPHONES.
2. SPLICE CASES SHALL BE PROVIDED FOR EACH TERMINATION, WITH FILLING COMPOUND FOR THE SPLICES AND BRACKETS ("TOWEL BARS") FOR THE SPLICE CASES. PROVIDE TAPE AS REQUIRED FOR SPLICE CASES.
3. PROVIDE TYPE 710 MODULES AS REQUIRED.
4. TELEPHONE CABLE METALLIC SHEATH SHALL BE INTERRUPTED UPON ENTERING BUILDING IN ACCORDANCE WITH NEC PARAGRAPH 800.93(A).
5. FOR ANY ADDITIONAL QUESTIONS ON ACCEPTABLE TELEPHONE RELATED EQUIPMENT MODEL NUMBERS, COORDINATE WITH TOM RYAN AT 207-438-1942.

DUCT INVESTIGATION NOTES

1. PROVIDE FIELD INVESTIGATIONS FOR ALL EXISTING DUCTS AND MANHOLES INDICATED FOR USE. THE INVESTIGATIONS SHALL BE COMPLETED AND HAVE VERIFIED THE DUCTS AND MANHOLES ARE FIT FOR USE PRIOR TO PROVIDING THE PROPOSED WIRING THROUGH THE EXISTING DUCTS AND MANHOLES.
2. EACH MANHOLE SHALL BE INVESTIGATED TO VERIFY WHICH DUCTS ARE OPEN AND AVAILABLE FOR USE.
3. THE DUCTS THAT ARE VERIFIED TO BE OPEN AND AVAILABLE FOR USE SHALL BE TESTED TO VERIFY THAT THEY ARE CLEAR OVER THE ENTIRE LENGTH OF THE DUCT.

☐ NEW WORK KEYNOTES

1. PROVIDE 12"Hx12"Wx8"D NEMA 4X NON-METALLIC ENCLOSURE WITH TII 25050-ST-M66PC (OR EQUAL) BUILDING ENTRANCE TERMINAL WITH FUSE PROTECTION ON STAINLESS STEEL PEDESTAL, ADJACENT TO EXISTING COMMUNICATIONS ENCLOSURES. TERMINAL STUB CABLE SHALL BE SPLICED TO 50 PAIR CABLE. THE 50 PAIR CABLE SHALL RUN INTO AND OUT OF THE 66 BLOCK TERMINAL. ENCLOSURE SHALL BE LABELED FOR X99E USE.
2. ALL 50 PAIR TELEPHONE CABLE SHALL BE "FILLED" TYPE CABLE. ACCEPTABLE CABLES SHALL INCLUDE BELL CATALOG #ANMA50, RUS STANDARD CATALOG #WG4A50 OR EQUAL.
3. PROVIDE TII 24100-710-M110C (OR EQUAL) BUILDING ENTRANCE TERMINAL IN BCO ROOM 170 IN BUILDING 174 FOR TERMINATION OF 50 PAIR CABLE. INSIDE TERMINAL PROVIDE TII 105-3C1575-N (OR EQUAL) SOLID STATE PROTECTOR FOR EACH CABLE PAIR. EXTEND CABLE PAIRS FROM PROTECTOR TO INPUT TYPE 710 CABLE TERMINATION AND FROM INPUT TERMINATION TO TYPE 110 OUTPUT TERMINATION.
4. PROVIDE 3/4"C, 1#6G FROM BUILDING ENTRANCE TERMINAL AND BOND TO NEAREST BUILDING GROUNDING ELECTRODE CONDUCTOR.
5. EXTEND TELEPHONE CABLE IN 1 1/2"C FROM JUNCTION BOX TO BUILDING ENTRANCE TERMINAL. PROVIDE 1#6G FROM BUILDING ENTRANCE TERMINAL AND BOND TO NEAREST BUILDING GROUNDING ELECTRODE CONDUCTOR.
6. EXTEND TELEPHONE CABLE IN 1 1/2"C FROM DC DISTRIBUTION ENCLOSURE TO BUILDING ENTRANCE TERMINAL. CONDUIT SHALL BE PVC COATED RIGID GALVANIZED STEEL.
7. PROVIDE 5 SF OF TYPE B CONCRETE REPAIRS TO INTERIOR OF ELECTRIC MANHOLE, SEE SHEET S-517 FOR REPAIR DETAILS.

KEY PLAN

GRAPHIC SCALE

1"=20' — 20' 0 20' 40'

CHECK GRAPHIC SCALE BEFORE USING

SYM	DESCRIPTION	DATE	APPR

NAVFAC

MN FST A JOINT VENTURE

A/E INFO

SEAL: COMMONWEALTH OF MASSACHUSETTS BARRY D. SQUIBB ELECTRICAL No. 40746-E REGISTERED PROFESSIONAL ENGINEER 03/01/16

APPROVED David Greenfield
FOR COMMANDER NAVFAC

ACTIVITY: PER DOCUMENT FROM PNSY CODE 980, KITTERY ME

SATISFACTORY TO DATE: 05/09/16

DES DPF | DRW DPF | CHK BDS

PM/DM: NATHAN LIBBY
BRANCH MANAGER: NATHAN MAHER
FEAD/PM&E: AMIN BAHROUR
FIRE PROTECTION: N/A

DEPARTMENT OF THE NAVY
NAVAL FACILITIES ENGINEERING COMMAND
NAVAL FACILITIES ENGINEERING COMMAND ~ MID-ATLANTIC
PUBLIC WORKS DEPARTMENT - MAINE
NAVAL SHIPYARD - PORTSMOUTH, NH
PORTSMOUTH NAVAL SHIPYARD KITTERY, MAINE

STRUCTURAL REPAIRS AT BERTHS 11A, 11B AND 11C

TELEPHONE PLAN - SHEET 1 OF 2

EPROJECT NO.: 1356489
CONSTR. CONTR. NO. N40085-XX-C-XXXX
NAVFAC DRAWING NO. 12716133
SHEET 137 OF 144

E-107 | FP2-16-773

DRAWFORM REVISION: 10 OCTOBER 2014

FILE NAME: S:\1794\Active\179410203\r\TP-104A PNSY Lifting Study\TP-104A PNSY Lifting Study\02 CADD\12 Electrical\FP2-16-774.dwg LAYOUT NAME: TELEPHONE PLAN - SHEET 1 OF 2 PLOTTED: Friday, May 13, 2016 - 3:07pm USER: cgoodridge

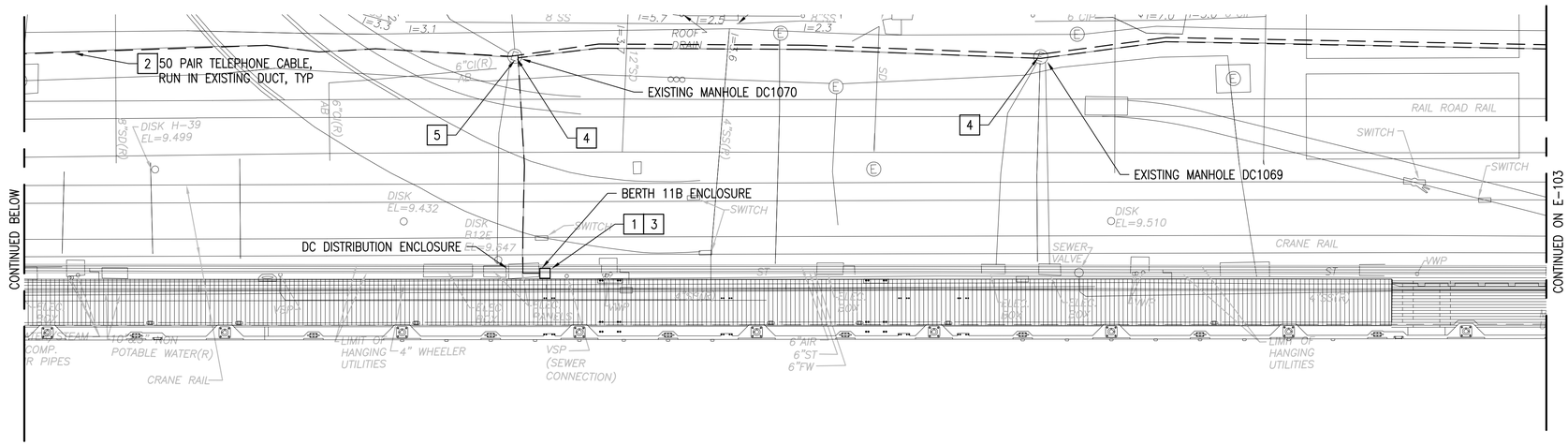

BERTH 11B PLAN

SCALE: 1" = 20'

PLAN NORTH

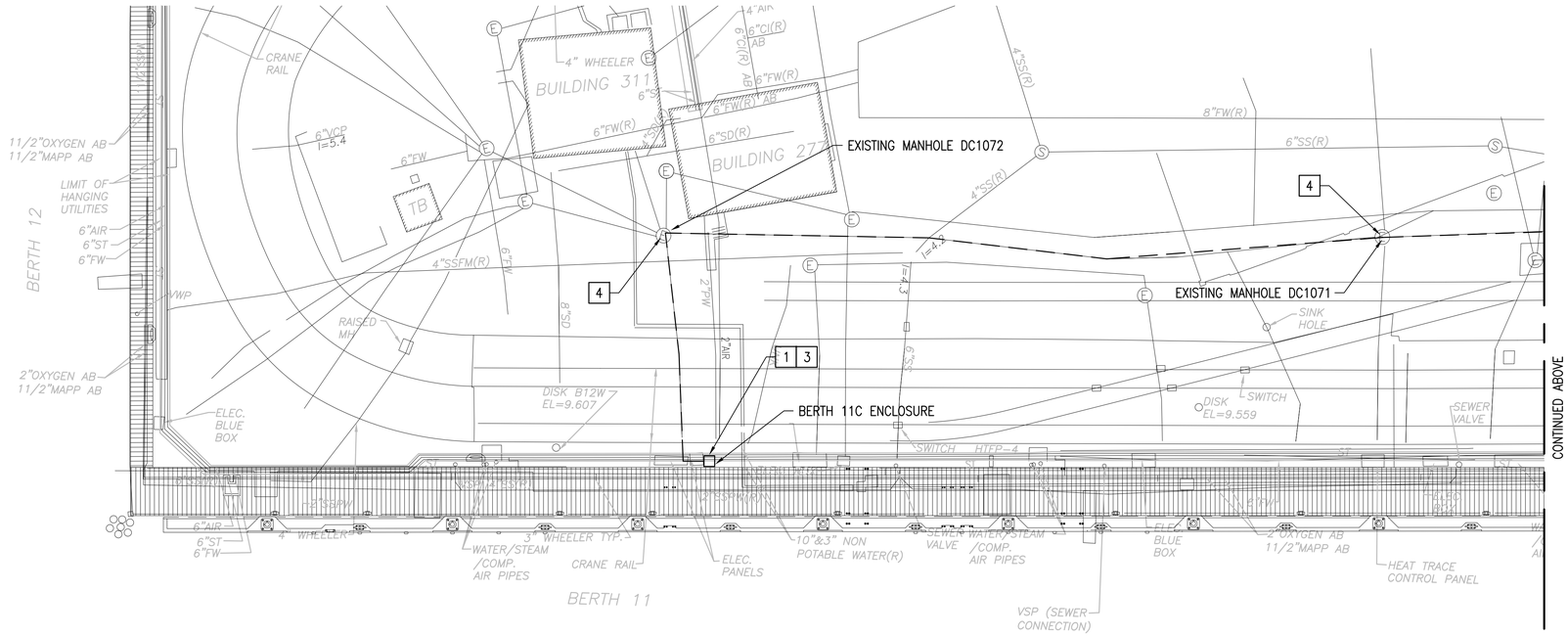

BERTH 11C PLAN

SCALE: 1" = 20'

PLAN NORTH

GENERAL NOTES:

1. ALL FUSES SHALL BE BY TII NETWORK TECHNOLOGIES OR EQUAL, BLACK FOR ANALOG TELEPHONES.
2. SPLICE CASES SHALL BE PROVIDED FOR EACH TERMINATION, WITH FILLING COMPOUND FOR THE SPLICES AND BRACKETS ("TOWEL BARS") FOR THE SPLICE CASES. PROVIDE TAPE AS REQUIRED FOR SPLICE CASES.
3. PROVIDE TYPE 710 MODULES AS REQUIRED.
4. TELEPHONE CABLE METALLIC SHEATH SHALL BE INTERRUPTED UPON ENTERING BUILDING IN ACCORDANCE WITH NEC PARAGRAPH 800.93(A).
5. FOR ANY ADDITIONAL QUESTIONS ON ACCEPTABLE TELEPHONE RELATED EQUIPMENT MODEL NUMBERS, COORDINATE WITH TOM RYAN AT 207-438-1942.

DUCT INVESTIGATION NOTES

1. PROVIDE FIELD INVESTIGATIONS FOR ALL EXISTING DUCTS AND MANHOLES INDICATED FOR USE. THE INVESTIGATIONS SHALL BE COMPLETED AND HAVE VERIFIED THE DUCTS AND MANHOLES ARE FIT FOR USE PRIOR TO PROVIDING THE PROPOSED WIRING THROUGH THE EXISTING DUCTS AND MANHOLES.
2. EACH MANHOLE SHALL BE INVESTIGATED TO VERIFY WHICH DUCTS ARE OPEN AND AVAILABLE FOR USE.
3. THE DUCTS THAT ARE VERIFIED TO BE OPEN AND AVAILABLE FOR USE SHALL BE TESTED TO VERIFY THAT THEY ARE CLEAR OVER THE ENTIRE LENGTH OF THE DUCT.

☐ NEW WORK KEYNOTES:

1. PROVIDE 12"Hx12"Wx8"D NEMA 4X NON-METALLIC ENCLOSURE WITH TII 25050-ST-M66PC (OR EQUAL) BUILDING ENTRANCE TERMINAL WITH FUSE PROTECTION ON STAINLESS STEEL PEDESTAL, ADJACENT TO EXISTING COMMUNICATIONS ENCLOSURES. TERMINAL STUB CABLE SHALL BE SPLICED TO 50 PAIR CABLE. THE 50 PAIR CABLE SHALL RUN INTO AND OUT OF THE 66 BLOCK TERMINAL. ENCLOSURE SHALL BE LABELED FOR X99E USE.
2. ALL 50 PAIR TELEPHONE CABLE SHALL BE "FILLED" TYPE CABLE. ACCEPTABLE CABLES SHALL INCLUDE BELL CATALOG #ANMA50, RUS STANDARD CATALOG #WG4A50 OR EQUAL.
3. EXTEND TELEPHONE CABLE IN 1 1/2"C FROM DC DISTRIBUTION ENCLOSURE TO BUILDING ENTRANCE TERMINAL. CONDUIT SHALL BE PVC COATED RIGID GALVANIZED STEEL.
4. PROVIDE 5 SF OF TYPE B CONCRETE REPAIRS TO INTERIOR OF ELECTRIC MANHOLE, SEE SHEET S-517 FOR REPAIR DETAILS.
5. REMOVE AND DISPOSE OF EXISTING FRAME AND COVER AND PROVIDE NEW FRAME AND COVER RATED FOR HS20 LOADING, SIZE TO MATCH EXISTING.

KEY PLAN

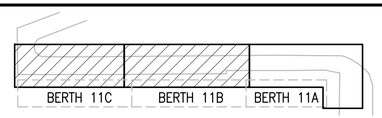

GRAPHIC SCALE

1"=20'

20' 0 20' 40'

CHECK GRAPHIC SCALE BEFORE USING

APPR	DATE	DESCRIPTION	STM

NAVFAC

COMMONWEALTH OF MASSACHUSETTS — BARRY R. SQUIRE — ELECTRICAL — REGISTERED PROFESSIONAL ENGINEER — 05/06/16 — SEAL

MN FST A JOINT VENTURE — A/E INFO

APPROVED — FOR COMMANDER NAVFAC

ACTIVITY: PER DOCUMENT FROM PNSY. CODE 980, KITTERY ME

SATISFACTORY TO — DATE: 05/09/16

DES: DPF | DRW: DPF | CHK: BDS

PM/DM: NATHAN LIBBY

BRANCH MANAGER: NATHAN MAHER

FEAD/PM&E: AMIN BAHROUR

FIRE PROTECTION: N/A

DEPARTMENT OF THE NAVY
NAVAL FACILITIES ENGINEERING COMMAND
PUBLIC WORKS DEPARTMENT - MAINE
PORTSMOUTH NAVAL SHIPYARD

NAVAL FACILITIES ENGINEERING COMMAND ~ MID-ATLANTIC
NAVAL SHIPYARD ~ PORTSMOUTH, NH
KITTERY, MAINE

STRUCTURAL REPAIRS AT BERTHS 11A, 11B AND 11C

TELEPHONE PLAN - SHEET 2 OF 2

EPROJECT NO.: 1356489

CONSTR. CONTR. NO. N40085-XX-C-XXXX

NAVFAC DRAWING NO. 12716134

SHEET 138 OF 144

E-108 | FP2-16-774

DRAWFORM REVISION: 10 OCTOBER 2014

FILE NAME: S:\1794\Active\1794102037\TP-104A PNSY Lifting Study\TP-104A PNSY Lifting Study\02 CADD\12 Electrical\FP2-16-774.dwg LAYOUT NAME: TELEPHONE PLAN - SHEET 2 OF 2 PLOTTED: Friday, May 13, 2016 - 3:07pm USER: cgoodridge

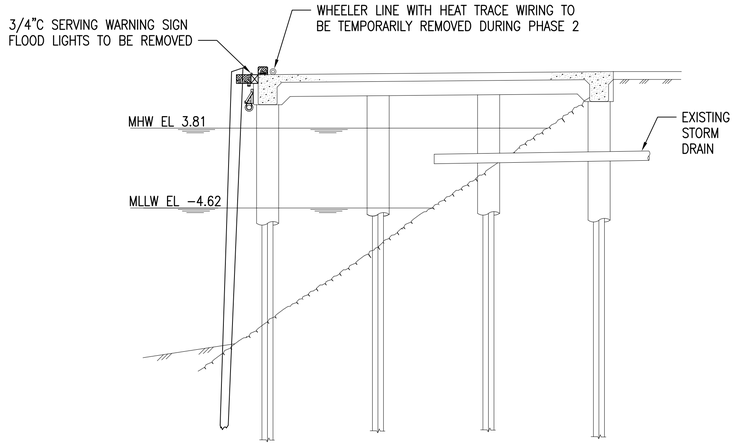

ELECTRICAL SECTION AT BERTH 11 (EAST END) C1

SCALE: 1/8" = 1'-0"

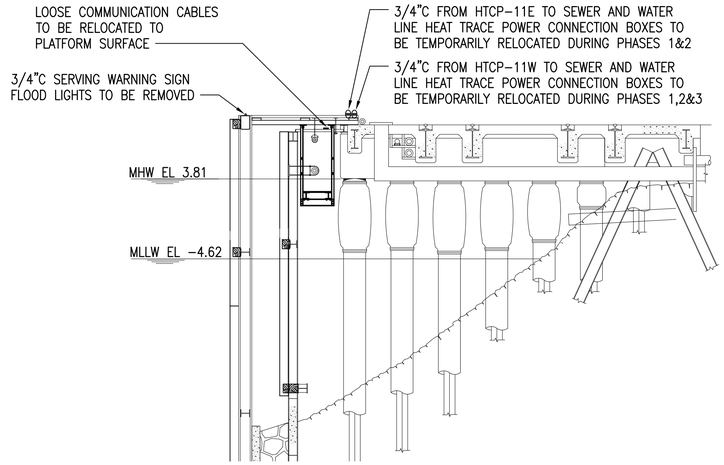

ELECTRICAL SECTION AT BERTH 11B C4

SCALE: 1/8" = 1'-0"

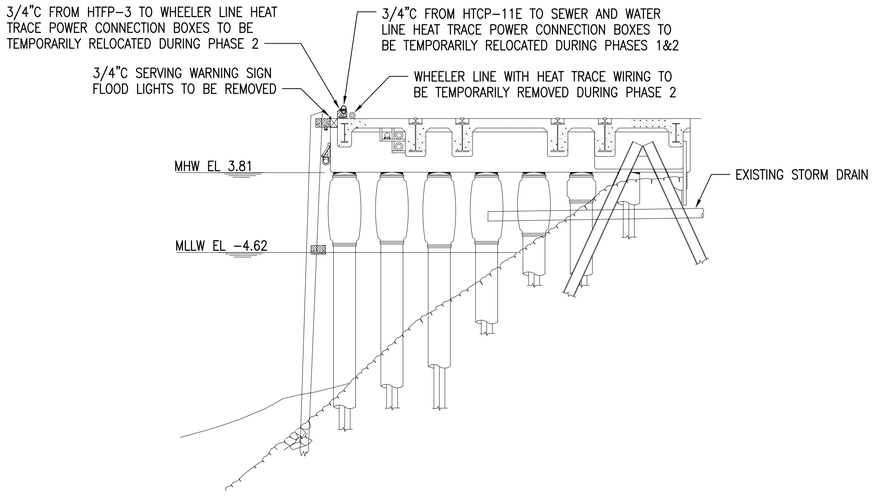

ELECTRICAL SECTION AT BERTH 11A A1

SCALE: 1/8" = 1'-0"

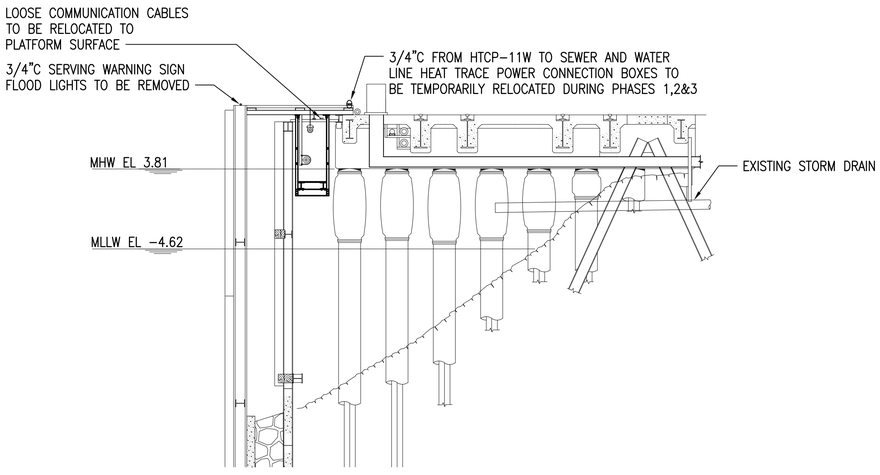

ELECTRICAL SECTION AT BERTH 11C A4

SCALE: 1/8" = 1'-0"

GRAPHIC SCALE

1/8"=1'-0" 4' 0 4' 8' 12' 16'

CHECK GRAPHIC SCALE BEFORE USING

APPR	DATE	DESCRIPTION	STM

NAVFAC

COMMONWEALTH OF MASSACHUSETTS BARRY E. SQUIBB ELECTRICAL PROFESSIONAL ENGINEER 05/09/16 SEAL

MNFST A JOINT VENTURE A/E INFO

APPROVED David W. Grunfeld FOR COMMANDER NAVFAC

ACTIVITY: PER DOCUMENT FROM PNSY CODE 980, KITTERY ME

SATISFACTORY TO DATE: 05/09/16

DES: DPF | DRW: DPF | CHK: BDS

PM/DM: NATHAN LIBBY

BRANCH MANAGER: NATHAN MAHER

FEAD/PM&E: AMN BAHROUR

FIRE PROTECTION: N/A

DEPARTMENT OF THE NAVY
NAVAL FACILITIES ENGINEERING COMMAND
PUBLIC WORKS DEPARTMENT - MAINE
PORTSMOUTH NAVAL SHIPYARD

NAVAL FACILITIES ENGINEERING COMMAND ~ MID-ATLANTIC
NAVAL SHIPYARD - PORTSMOUTH, NH
KITTERY, MAINE

STRUCTURAL REPAIRS AT BERTHS 11A, 11B AND 11C

ELECTRICAL SECTIONS

EPROJECT NO.: 1356489

CONSTR. CONTR. NO. N40085-XX-C-XXXX

NAVFAC DRAWING NO. 12716135

SHEET 139 OF 144

E-301 | FP2-16-775

DRAWFORM REVISION: 10 OCTOBER 2014

FILE NAME: S:\1794\Active\179410203\VTP-104A PNSY Lifting Study\VTP-104A PNSY Lifting Study\02 CADD\12 Electrical\FP2-16-775.dwg LAYOUT NAME: ELECTRICAL SECTIONS PLOTTED: Friday, May 13, 2016 - 3:07pm USER: cgoodridge

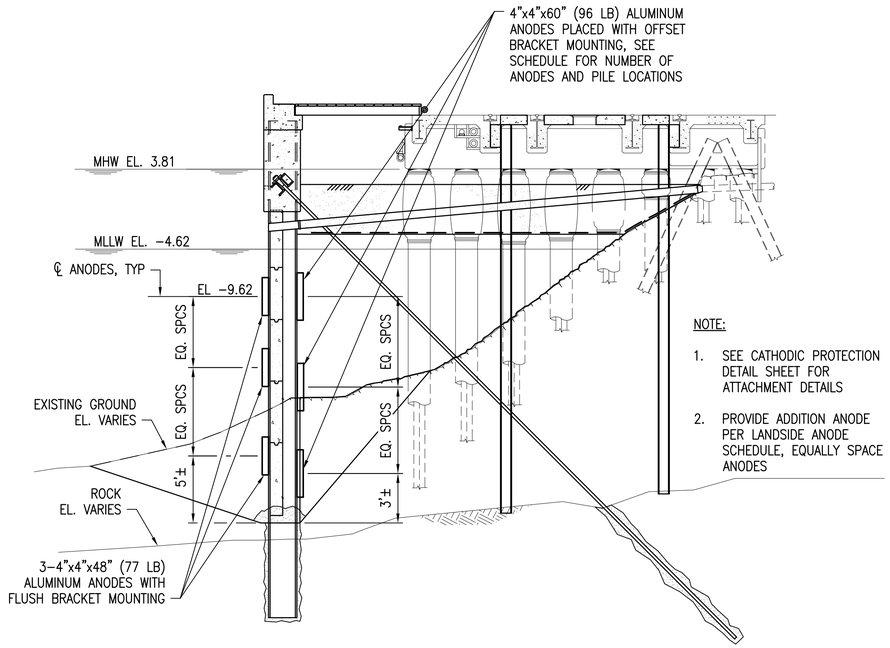

NOTE:

1. SEE CATHODIC PROTECTION DETAIL SHEET FOR ATTACHMENT DETAILS
2. PROVIDE ADDITION ANODE PER LANDSIDE ANODE SCHEDULE, EQUALLY SPACE ANODES

TYPICAL SECTION OF CATHODIC PROTECTION AT BERTH 11A (C1)

SCALE: 1/8" = 1'-0"

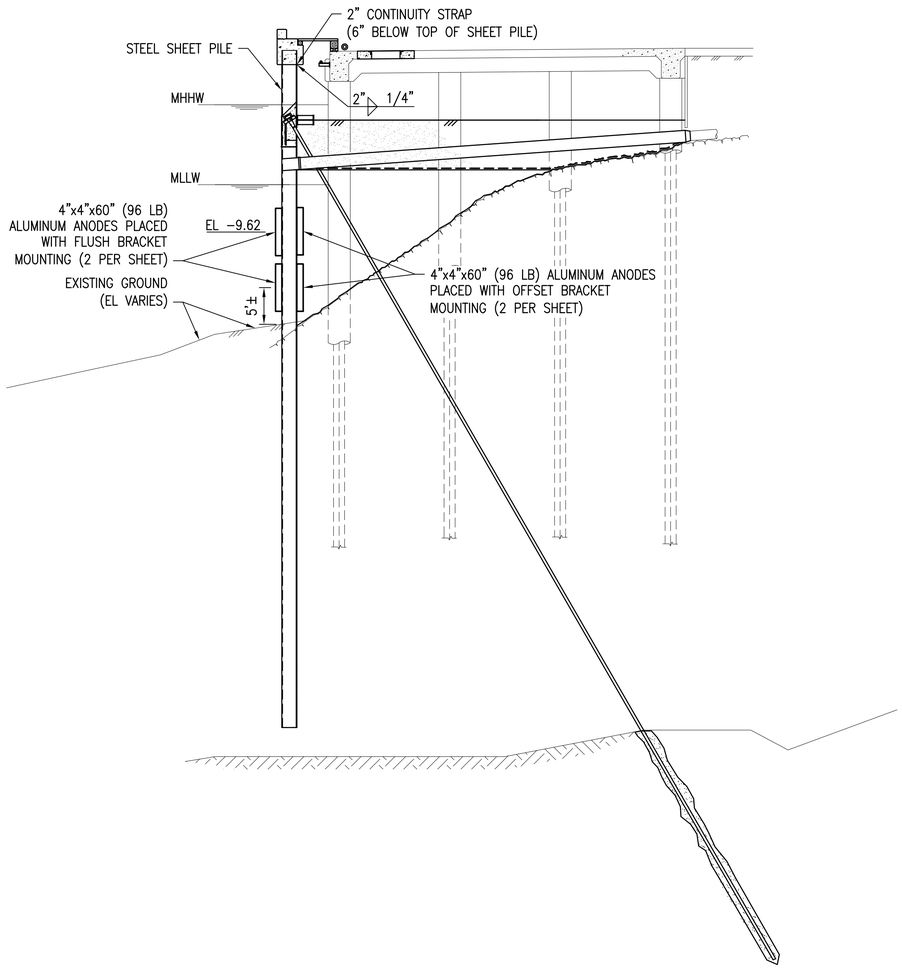

TYPICAL SECTION - HEAD END (A3)

SCALE: 1/8" = 1'-0"

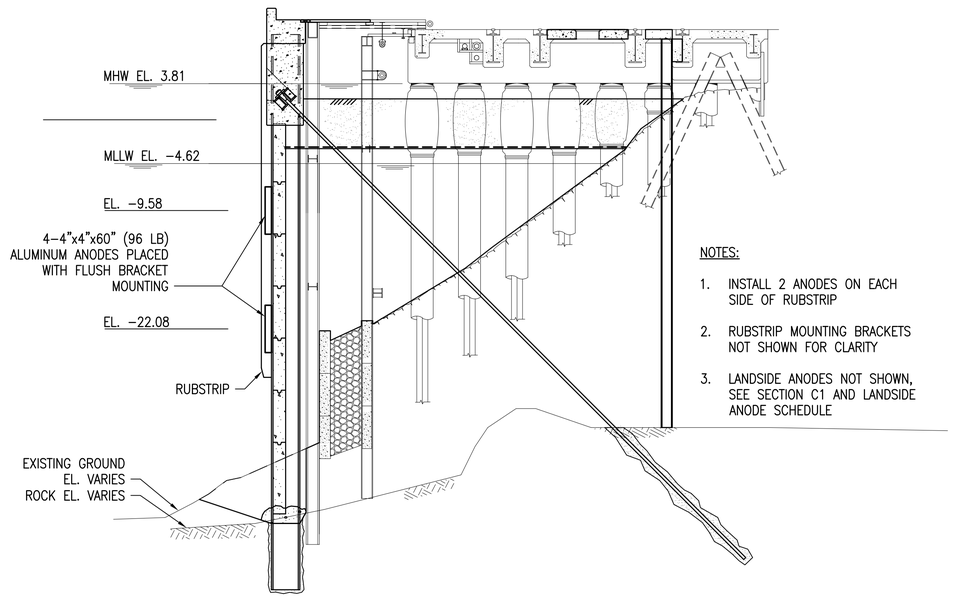

NOTES:

1. INSTALL 2 ANODES ON EACH SIDE OF RUBSTRIP
2. RUBSTRIP MOUNTING BRACKETS NOT SHOWN FOR CLARITY
3. LANDSIDE ANODES NOT SHOWN, SEE SECTION C1 AND LANDSIDE ANODE SCHEDULE

TYPICAL SECTION OF CATHODIC PROTECTION AT KING PILES WITH RUB STRIPS (A1)

SCALE: 1/8" = 1'-0"

LANDSIDE ANODE SCHEDULE

KING PILE NO.	# OF LANDSIDE ANODES PER PILE
1 - 4	4
5 - 39	3
40 - 71	4
72 - 83	3
84 - 93	4

NOTES:

1. SEE SHEET S-305 FOR FENDER BRACKET DETAIL
2. SEE SHEET E-501 FOR CATHODIC PROTECTION DETAILS

GRAPHIC SCALE

1/8"=1'-0" 4' 0 4' 8' 12' 16'

CHECK GRAPHIC SCALE BEFORE USING

SYM	DESCRIPTION	DATE	APPR

NAVFAC

NACE International
PETER A. LAMB
03/04/2016
Cert# 3571
Cathodic Protection Specialist
SEAL

MN FST
A JOINT VENTURE
A/E INFO

APPROVED
David W. Greenfield
FOR COMMANDER NAVFAC

ACTIVITY:
PER DOCUMENT FROM PNSY CODE 980, KITTERY ME

SATISFACTORY TO DATE: 05/09/16

DES DPF | DRW CHG | CHK DPF

PM/DM: NATHAN LIBBY
BRANCH MANAGER: NATHAN MAHER
FEAD/PM&E: AMIN BAHROUR
FIRE PROTECTION: N/A

DEPARTMENT OF THE NAVY
NAVAL FACILITIES ENGINEERING COMMAND
PUBLIC WORKS DEPARTMENT - MAINE
NAVAL FACILITIES ENGINEERING COMMAND ~ MID-ATLANTIC
NAVAL SHIPYARD - PORTSMOUTH, NH
PORTSMOUTH NAVAL SHIPYARD
KITTERY, MAINE

STRUCTURAL REPAIRS AT BERTHS 11A, 11B AND 11C

CATHODIC PROTECTION SECTIONS

EPROJECT NO.: 1356489
CONSTR. CONTR. NO. N40085-XX-C-XXXX
NAVFAC DRAWING NO. 12716136
SHEET 140 OF 144
E-302 FP2-16-776
DRAWFORM REVISION: 10 OCTOBER 2014

FILE NAME: S:\1794\Active\179410203\r\TP-104A PNSY Lifting Study\TP-104A PNSY Lifting Study\02 CADD\12 Electrical\E-302 CATHODIC PROTECTION SECTIONS.dwg LAYOUT NAME: CATHODIC PROTECTION SECTIONS PLOTTED: Friday, May 13, 2016 - 3:07pm USER: cgoodridge

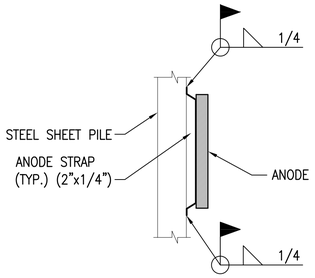

OFFSET MOUNT ANODE INSTALLATION (D2)

SCALE: NOT TO SCALE E-501

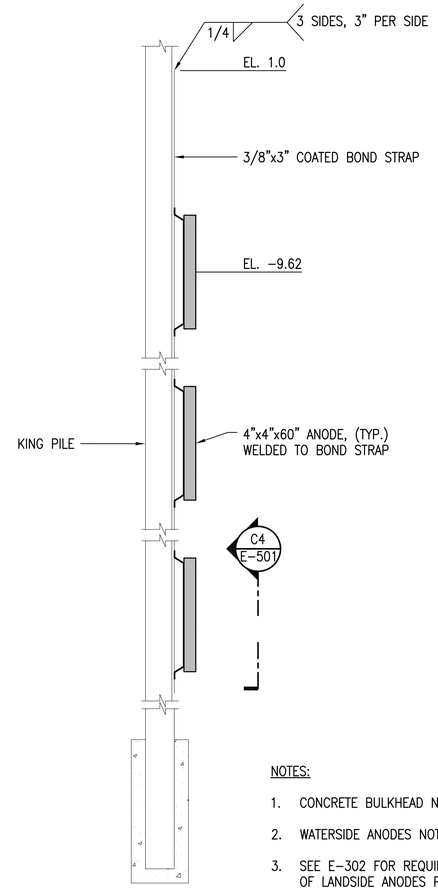

NOTES:

1. CONCRETE BULKHEAD NOT SHOWN.
2. WATERSIDE ANODES NOT SHOWN.
3. SEE E-302 FOR REQUIRED NUMBER OF LANDSIDE ANODES PER KING PILE

SECTION - LANDSIDE ANODES @ KING PILES (B3)

SCALE: NOT TO SCALE E-501

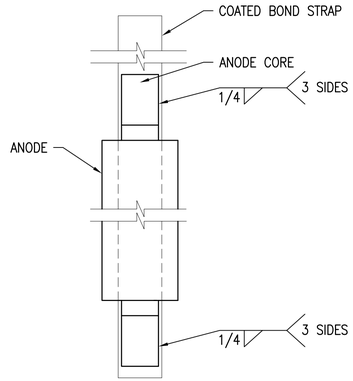

ELEVATION (C4)

SCALE: NOT TO SCALE E-501

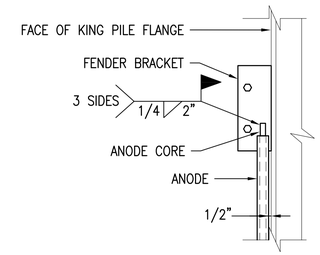

DETAIL (D5)

SCALE: NOT TO SCALE E-501

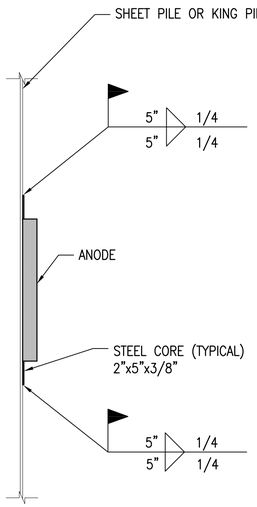

FLUSH MOUNT ANODE INSTALLATION (B2)

SCALE: NOT TO SCALE E-501

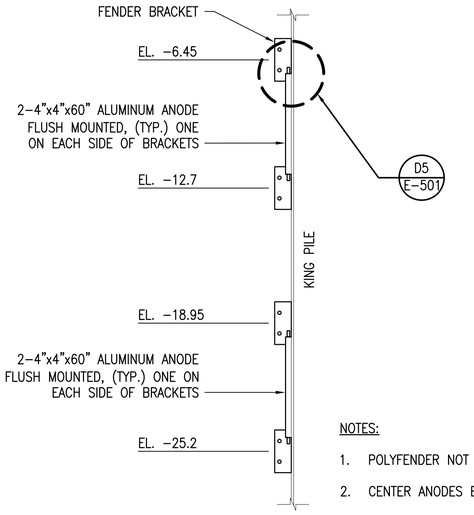

NOTES:

1. POLYFENDER NOT SHOWN.
2. CENTER ANODES BETWEEN BRACKETS.

SECTION WATER SIDE ANODES @ KING PILE WITH RUB STRIPS (B5)

SCALE: NOT TO SCALE E-501

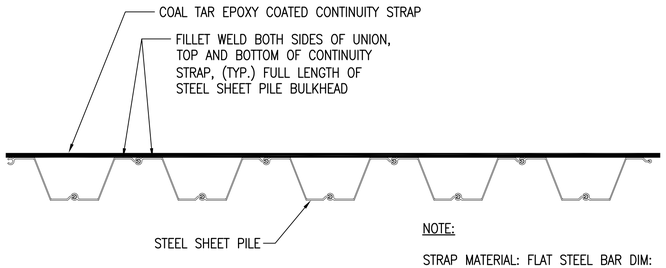

NOTE:

STRAP MATERIAL: FLAT STEEL BAR DIM: 2.000"w x 1/4"tx"L"

CONTINUITY STRAP DETAIL (A2)

SCALE: NOT TO SCALE E-501

APPR	DATE	DESCRIPTION	STM

NACE International
PETER A. LAMB
03/04/2016
Cert# 3571
Cathodic Protection Specialist
SEAL

MN FST
A JOINT VENTURE
A/E INFO

APPROVED
David W. Grunfeld
FOR COMMANDER NAVFAC

ACTIVITY:
PER DOCUMENT FROM PNSY
CODE 980, KITTERY ME

SATISFACTORY TO DATE: 06/09/16

DES MN | DRW HBF | CHK BDS

PM/DM: NATHAN LIBBY

BRANCH MANAGER: NATHAN MAHER

FEAD/PM&E: AMIN BAHROUR

FIRE PROTECTION: N/A

DEPARTMENT OF THE NAVY
NAVAL FACILITIES ENGINEERING COMMAND
PUBLIC WORKS DEPARTMENT - MAINE
PORTSMOUTH NAVAL SHIPYARD

NAVAL FACILITIES ENGINEERING COMMAND – MID-ATLANTIC
NAVAL SHIPYARD - PORTSMOUTH, NH

KITTERY, MAINE

STRUCTURAL REPAIRS
AT BERTHS 11A, 11B AND 11C

CATHODIC PROTECTION DETAILS

EPROJECT NO.: 1356489

CONSTR. CONTR. NO.
N40085-XX-C-XXXX

NAVFAC DRAWING NO.
12716137

SHEET 141 OF 144

E-501 | FP2-16-777

DRAWFORM REVISION: 10 OCTOBER 2014

FILE NAME: S:\1794\Active\179410203\V\TP-104A PNSY Lifting Study\TP-104A PNSY Lifting Study\02 CAD\12 Electrical\FP2-16-777.dwg LAYOUT NAME: CATHODIC PROTECTION DETAILS PLOTTED: Friday, May 13, 2016 - 3:08pm USER: cgoodridge

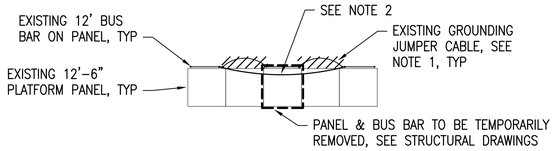

STEP 1 - PANEL & BUS BAR REMOVAL

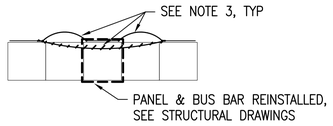

STEP 2 - PANEL & BUS BAR REINSTALLATION

GENERAL NOTES:

1. EXISTING 12'-6" LONG WOODEN PLATFORM PANELS WITH 12' GROUNDING BUS BARS ALONG BERTH 11B & 11C TO BE TEMPORARILY REMOVED DURING CONSTRUCTION FOR FILL INSTALLATION. REFER TO SHEETS S-109, S-110 AND S-111 FOR EXACT LOCATIONS OF BUS BARS TO BE TEMPORARILY REMOVED WITH PLATFORM PANELS.
2. THE WOODEN PLATFORM PANELS BETWEEN BENTS 33 AND 30 WILL BE REMOVED FOR INSTALLATION OF EQUIPMENT PLATFORM AND NOT REPLACED. PROVIDE GROUNDING JUMPER CABLE, TYPICAL TO DETAIL NOTE 2, BETWEEN EXISTING BUS BARS AT BENTS 33 AND 29.
3. FOR PERMANENT EQUIPMENT CONNECTED TO BUS BARS BEING REMOVED OR REPLACED, REMOVE EXISTING GROUNDING JUMPER CABLE AND PROVIDE GROUNDING JUMPER CABLE, TYPICAL TO DETAIL NOTE 2, TO NEAREST BUS BAR TO REMAIN.

BUS BAR DETAIL NOTES:

1. REMOVE EXISTING JUMPER CABLE BETWEEN BUS BARS.
2. PROVIDE TEMPORARY 1#4/0G CABLE BETWEEN BUS BARS. SECURE CABLE TO EACH BUS BAR WITH 3/4"x8" LAG BOLT TO MATCH EXISTING CONNECTIONS. GROUNDING CABLE SHALL BE MILITARY SHIPBOARD CABLE IN ACCORDANCE WITH MIL-915G, BARE COPPER CONDUCTOR WITH SEPARATOR TAPE, BLACK EPR INSULATION AND BLACK NEOPRENE JACKET.
3. ONCE PLATFORM PANEL IS REINSTALLED, REMOVE TEMPORARY GROUNDING CABLE AND PROVIDE GROUNDING CABLE FROM REINSTALLED BUS BAR TO ADJACENT BUS BARS. GROUND CABLE AND CONNECTION TO BUS BARS SHALL BE TYPICAL TO DETAIL NOTE 2.

BUS BAR GROUNDING DETAIL

NOT TO SCALE

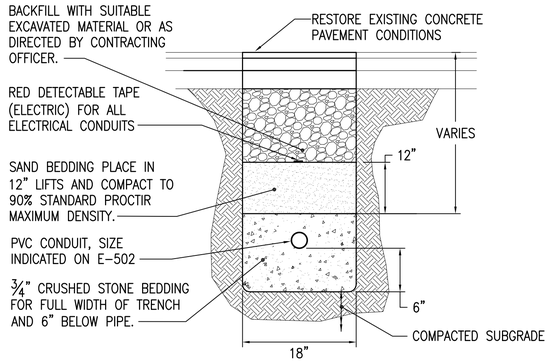

DIRECT BURIED CONDUIT DETAIL

NOT TO SCALE

NOTES:

1. POST SHALL BE CUSTOM FABRICATED FROM 11 GAUGE STAINLESS STEEL. POST SHALL BE 6"Wx6"LX30"T, CAPPED AT TOP, AND COME WITH SUPPORT BASE FOR MOUNTING DIRECTLY TO WOODEN PLATFORM.
2. POST SHALL HAVE (2) WEATHERPROOF WHILE-IN-USE, 20A, L6-20R TWIST LOCK RECEPTACLES, MOUNTED AT TOP OF POST.

RECEPTACLE POST NOTES

NOT TO SCALE

CONDUIT AND WIRE SCHEDULE	
TAG	CONDUIT & WIRING
1	1 1/2"C, 8#6, 1#8G
2	EXISTING DUCT, 8#6, 1#8G
3	25' 3#10 SOOW CORD WITH PLUG TO MATCH RECEPTACLE
4	3/4"C, 4#10, 1#10G
5	3/4"C, 2#10, 1#10G
6	1"C, 2#6, 1#8G
7	1"C, 6#6, 1#8G
8	1"C, 4#6, 1#8G
9	3/4"C, 2#10 (POWER), 3#10 (PHOTOCELL), 1#10G

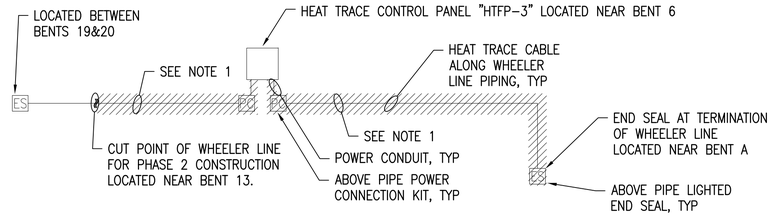

STEP 1 - WHEELER LINE REPOSITIONING - HEAT TRACE REMOVAL

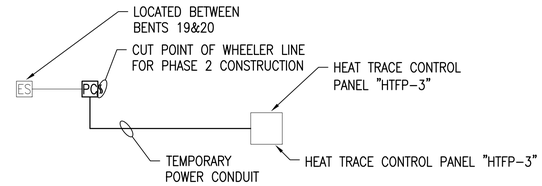

STEP 2 - TEMPORARY HEAT TRACE

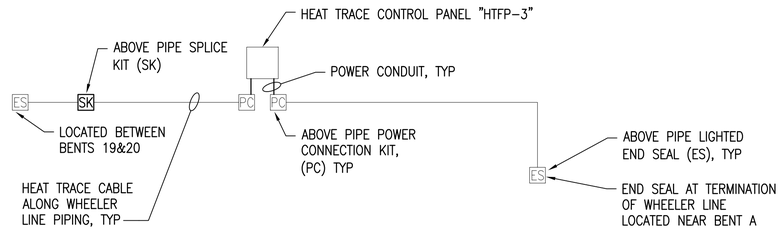

STEP 3 - WHEELER LINE REINSTALLATION - HEAT TRACE REINSTALLATION

WHEELER LINE HEAT TRACING DIAGRAM

NOT TO SCALE

HEAT TRACE NOTES:

1. EXISTING HEAT TRACING EQUIPMENT ON WHEELER LINE BEING REPOSITIONED SHALL REMAIN ON PIPE FOR REUSE.
2. DEMOLISH EQUIPMENT INSTALLED IN STEP 2 PRIOR TO STEP 3.
3. ALL NEW HEAT TRACING EQUIPMENT SHALL MATCH EXISTING MANUFACTURER AND TYPE.
4. ALL NEW POWER CONDUITS & WIRING SHALL MATCH EXISTING SIZE & TYPE.
5. SHUT DOWN "HTFP-3" PRIOR TO ANY WORK BEING PERFORMED ON WHEELER LINE OR ITS HEAT TRACING CABLE.
6. COORDINATE STEPS 1, 2 & 3 WITH WORK BEING DONE ON WHEELER LINE.
7. PROVIDE HEAT TRACING CABLE AS REQUIRED TO MAKE CONNECTIONS.
8. COORDINATE HEAT TRACING WORK WITH MANUFACTURER OF EXISTING HEAT TRACING EQUIPMENT.

HEAT TRACING DIAGRAM LEGEND

PC HEAT TRACE POWER CONNECTION KIT. KIT PROVIDES CONNECTION OF POWER WIRING TO HEAT TRACE WIRING.

SK HEAT TRACE SPLICE CONNECTION KIT. KIT PROVIDES SPLICE POINT FOR HEAT TRACE WIRING, ABOVE PIPING, WITHIN HEAT TRACE WIRING RUN.

ES HEAT TRACE LIGHTED END SEAL. TERMINATES HEAT TRACE WIRING RUN. LIGHT INDICATES IF HEAT TRACE CIRCUIT IS OPERATIONAL OR NOT.

APPR	DATE	DESCRIPTION	SYM

NAVFAC

COMMONWEALTH OF MASSACHUSETTS — BARRY J. SQUIRE — ELECTRICAL — PROFESSIONAL ENGINEER — 05/06/16 — SEAL

MN FST A JOINT VENTURE — A/E INFO

APPROVED (Name and Title): David W. Dunfield
FOR COMMANDER NAVFAC

ACTIVITY: PER DOCUMENT FROM PNSY CODE 980, KITTERY ME

SATISFACTORY TO: DATE: 05/09/16

DES	DPF	DRW	DPF	CHK	BDS

PM/DM: NATHAN LIBBY
BRANCH MANAGER: NATHAN MAHER
FEAD/PM&E: AMN BAHROUR
FIRE PROTECTION: N/A

DEPARTMENT OF THE NAVY
NAVAL FACILITIES ENGINEERING COMMAND
PUBLIC WORKS DEPARTMENT - MAINE
PORTSMOUTH NAVAL SHIPYARD

NAVAL FACILITIES ENGINEERING COMMAND
NAVAL SHIPYARD - PORTSMOUTH, NH
KITTERY, MAINE

STRUCTURAL REPAIRS AT BERTHS 11A, 11B AND 11C

ELECTRICAL DETAILS - SHEET 1 OF 2

EPROJECT NO.: 1356489

CONSTR. CONTR NO.: N40085-XX-C-XXXX

NAVFAC DRAWING NO.: 12716138

SHEET 142 OF 144

E-502 | FP2-16-778

DRAWFORM REVISION: 10 OCTOBER 2014

FILE NAME: S:\1794\Active\179410203\VTP-104A PNSY Lifting Study\TP-104A PNSY Lifting Study\02 CAD\12 Electrical\FP2-16-778.dwg LAYOUT NAME: ELECTRICAL DETAILS - SHEET 1 OF 2 PLOTTED: Friday, May 13, 2016 - 3:08pm USER: cpoodridge

LUMINAIRE SCHEDULE

FIXTURE TYPE	SYMBOL	DESCRIPTION	VOLTAGE	LAMP TYPE	MOUNTING	MINIMUM LUMEN OUTPUT	MAXIMUM WATTAGE	BASIS OF DESIGN	NOTES	LOCATION(S)
A		SURFACE MOUNTED SLIM LED WALLPACK. LUMINAIRE SHALL BE DIE-CAST ALUMINUM, IP66, SUITABLE FOR WET LOCATIONS. FULL CUTOFF, FULLY SHIELDED, BRONZE FINISH. 5100K CCT.	120-277V	LED	SURFACE	1,531	14	RAB SLIM12 OR EQUAL	1	MOUNT ON TOP OF WARNING SIGN SUPPORT, AIMED DOWN AT SIGN, TYPICAL TO EXISTING LUMINAIRES.
B		WALL MOUNTED AREA LUMINAIRE. SEE AREA LUMINAIRE SPECIFICATIONS ON THIS SHEET. IESNA TYPE 4 DISTRIBUTION.	120-277V	LED	SURFACE	20,984	215	PHILIPS ECF-WS-4-215LA641A-NW-UNV-WP-TB-BD OR EQUAL	1 & 2	EXTERIOR OF BUILDING 299, SEE NOTE 3
C		POLE MOUNTED AREA LUMINAIRE; LUMINAIRE: SEE AREA LUMINAIRE SPECIFICATIONS ON THIS SHEET. PROVIDE LUMINAIRE WITH INTEGRAL PHOTOCELL. IESNA TYPE 3 DISTRIBUTION. POLE SPECIFICATIONS: 40' TALL, TAPERED ROUND COMPOSITE WITH ANCHOR BASE, ONE-PIECE ROUND FIBERGLASS REINFORCED COMPOSITE. POLE FINISH: POLYURETHANE COATING WITH 1.5 MIL DRY FILM THICKNESS. POLE COLOR: WHITE.	120-277V	LED	POLE	21,265	215	LUMINAIRE: PHILIPS ECF-1-3-215LA641A-NW-UNV-WP-TB-BD OR EQUAL POLE: PHILIPS TRC-AB-40H-D1-WP OR EQUAL	1 & 2	ADJACENT TO BUILDING 289.

LUMINAIRE SCHEDULE NOTES:

1. LUMINAIRE INSTALLATION SHALL INCLUDE ALL NECESSARY HANGERS, CHANNELS, SUPPORTS AND SUCH EQUIPMENT AS MAY BE REQUIRED TO ALIGN AND PROVIDE INDEPENDENT SUPPORT OF LUMINAIRES.
2. LUMINAIRE PHOTOMETRIC REQUIREMENT: LUMINAIRES MUST PROVIDE 5 LUX (0.5 FOOTCANDLES) MINIMUM MAINTAINED ILLUMINANCE AT ANY POINT ALONG THE WATERFRONT EDGE OF THE PIER IN FRONT OF BUILDING 299 AND ALONG THE WATERFRONT EDGE OF THE PIER BETWEEN 289 AND 299. USING A 0.7 LIGHT LOSS FACTOR.
3. DETAILS FOR ATTACHMENT TO BLDG 299 SHALL MATCH EXISTING EXTERIOR LIGHT ATTACHMENT DETAILS AND AS APPROVED BY THE CONTRACTING OFFICER.

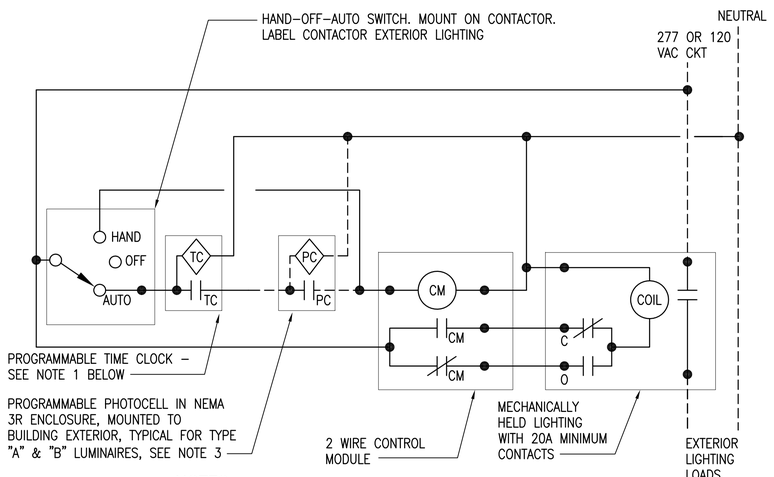

NOTES:

1. CONFIRM WITH ACTIVITY PRIOR TO PROGRAMMING.
2. DEVICES SHOWN SHALL BE MOUNTED ADJACENT TO ENCLOSURE FOR SOURCE PANEL, UNLESS OTHERWISE NOTED.
3. PHOTOCELL FOR TYPE "C" LUMINAIRE SHALL BE INTEGRAL TO LUMINAIRE.

SECURITY LIGHTING - SINGLE PHOTOCELL CONTROLLED DETAIL

NOT TO SCALE

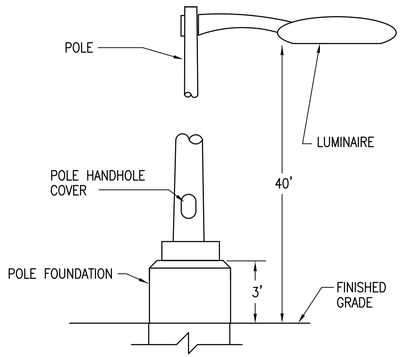

SINGLE LUMINAIRE

POLE AND LUMINAIRE DETAIL

NOT TO SCALE

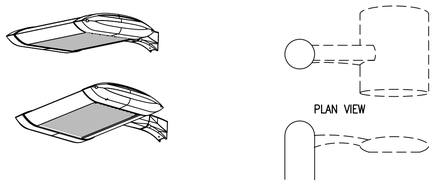

LUMINAIRE REQUIREMENTS:

1. LED LUMINAIRE SPECIFICATIONS: FULL CUTOFF DISTRIBUTION, 4000K COLOR TEMPERATURE, 70 CRI, LIFE: 300,000+ HOUR L70 @ 25°C (77° F). COLOR: WHITE
2. HOUSING – ONE PIECE DIE CAST ALUMINUM HOUSING WITH INTEGRAL ARM AND SEPARATE, SELF RETAINED HINGED, ONE PIECE DIE CAST DOOR FRAME WITH BIRD DETERRENT ATOP HOUSING. LED LIGHT ENGINE RATED IP66. VIBRATION RESISTANCE – ANSI C136.31 3G RATING IN THREE AXES.
3. FINISH – ELECTROSTATICALLY APPLIED, THERMALLY CURED, TRIGLYCIDAL ISOCYANURATE (TGIC) TEXTURED POLYESTER POWDERCOAT FINISH.
4. LENS – INDIVIDUAL LED LENSES SHALL BE NANO OPTIC TO PROVIDE SPECIFIED IESNA DISTRIBUTION TYPE INDICATED IN LUMINAIRE SCHEDULE.
5. ELECTRICAL – MULTI VOLT (120-277), OPEN/SHORT CIRCUIT PROTECTION. 10KA PER ANSI/IEEE C62.41.2.
6. CERTIFICATION – ETL/UL LISTED FOR WET LOCATIONS. ROHS COMPLIANT.
7. FIVE YEAR LIMITED WARRANTY ON FIXTURE.

LED AREA LUMINAIRE DETAIL

NOT TO SCALE

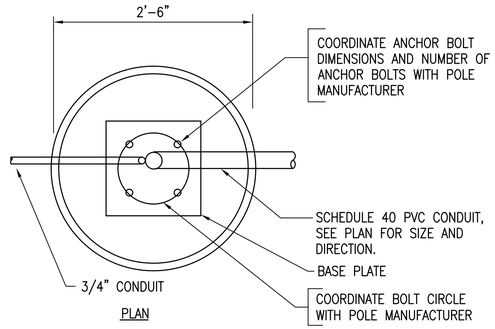

PLAN

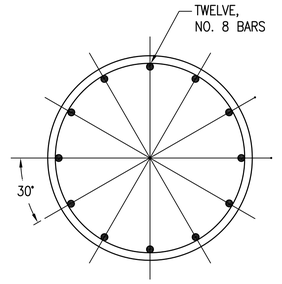

REINFORCING PLAN

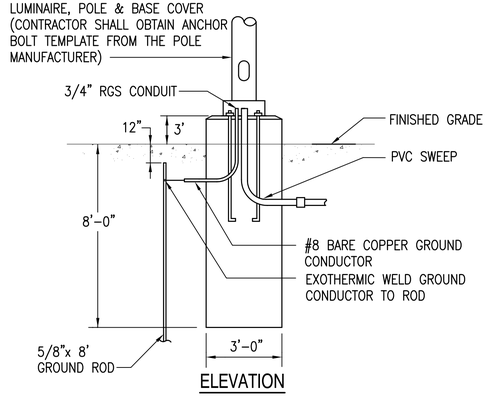

ELEVATION

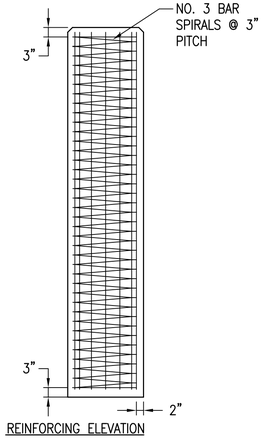

REINFORCING ELEVATION

POLE FOUNDATION NOTES:

1. OPENINGS SHALL BE PROVIDED FOR THE NUMBER AND SIZE OF CONDUITS AS INDICATED ON THE DRAWINGS.
2. PROVIDE GROUND ROD AT EACH POLE FOUNDATION.
3. CONCRETE STRENGTH 4,500 PSI @ 28 DAYS. DENSITY 150 PCF.
4. SEE LIGHTING POLE MANUFACTURER'S DATA FOR THE ANCHOR BOLT DETAILS BEFORE CONSTRUCTION
5. PROVIDE GROUNDING BUSHINGS ON ALL CONDUITS

POLE FOUNDATION & REINFORCING DETAIL

NOT TO SCALE

APPR | DATE | DESCRIPTION | SYM

NAVFAC

COMMONWEALTH OF MASSACHUSETTS – BARRY J. SQUIRE – ELECTRICAL – REGISTERED PROFESSIONAL ENGINEER – 03/04/16 – SEAL

MN FST A JOINT VENTURE – A/E INFO

APPROVED (Navy Official) David W. Trumfield
FOR COMMANDER NAVFAC

ACTIVITY: PER DOCUMENT FROM PNSY CODE 980, KITTERY ME

SATISFACTORY TO DATE: 05/09/16

DES: DPF | DRW: DPF | CHK: BDS

PM/DM: NATHAN LIBBY

BRANCH MANAGER: NATHAN MAHER

FEAD/PM&E: AMIN BAHROUR

FIRE PROTECTION: N/A

DEPARTMENT OF THE NAVY
NAVAL FACILITIES ENGINEERING COMMAND
PUBLIC WORKS DEPARTMENT – MAINE
PORTSMOUTH NAVAL SHIPYARD

NAVAL FACILITIES ENGINEERING COMMAND ~ MID-ATLANTIC
NAVAL SHIPYARD – PORTSMOUTH, NH

KITTERY, MAINE

STRUCTURAL REPAIRS AT BERTHS 11A, 11B AND 11C

ELECTRICAL DETAILS – SHEET 2 OF 2

EPROJECT NO.: 1356489

CONSTR. CONTR. NO. N40085-XX-C-XXXX

NAVFAC DRAWING NO. 12716139

SHEET 143 OF 144

E-503 | FP2-16-779

DRAWFORM REVISION: 10 OCTOBER 2014

FILE NAME: S:\1794\Active\179410203\VP-104A PNSY Lifting Study\VP-104A PNSY Lifting Study\02 CADD\12 Electrical\FP2-16-779.dwg LAYOUT NAME: ELECTRICAL DETAILS – SHEET 2 OF 2 PLOTTED: Friday, May 13, 2016 – 3:08pm USER: cpoodrige

MINI POWER CENTER "MPC-2"											
VOLTAGE (L-N):	120		MAIN TYPE:	MCB		ENCLOSURE:	NEMA 3R, 316 STAINLESS STEEL				
VOLTAGE (L-L):	240		MAIN BREAKER RATING (A):	15		MOUNTING:	SURFACE				
PHASES, WIRES:	1φ,3W		MINIMUM BUS CAPACITY (A):	100		LOCATION:	BERTH 11 WOODEN PLATFORM				
AIC RATING (A):	18,000			-	—						

CKT. NO.	LOAD SERVED	TRIP	POLE	VA-A		VA-B		POLE	TRIP	LOAD SERVED	CKT. NO.
1	RECEPTACLE POST	15	1P	360	360			1P	15	RECEPTACLE POST	2
3	RECEPTACLE POST	15	1P			360	360	1P	15	RECEPTACLE POST	4
5	SPARE	15	1P	0	0			1P	15	SPARE	6
7	SPARE	15	1P			0	0	1P	15	SPARE	8
9	SPARE	15	1P	0	0			1P	15	SPARE	10
11	SPARE	15	1P			0	0	1P	15	SPARE	12
			TOTAL LOAD:	0.720 KVA		0.720 KVA					
						TOTAL CONNECTED LOAD:		1.440KVA		6.00 A	

MINI POWER CENTER NOTES:

1. THE SCHEDULE AND NOTES ARE TYPICAL FOR EACH MINI POWER CENTER, EXCEPT FOR THE NAMES AND THAT "MPC-1" WILL HAVE A SPARE CIRCUIT BREAKER FOR CIRCUIT #4 INSTEAD OF FEEDING RECEPTACLE POST.

2. THE VOLTAGE, PHASE, WIRES AND MAIN BREAKER RATING IN THE SCHEDULE ARE FOR THE SECONDARY SIDE OF THE MINI POWER CENTER. THE PRIMARY SIDE SHALL BE 480V, 1PH, 2W, 15A MCB.

3. THE INTEGRAL TRANSFORMER SHALL BE RATED 3KVA, 1PH, 480V TO 120/240V. TRANSFORMER SHALL HAVE COPPER WINDINGS WITH BOLT-ON LOADCENTER CHASSIS. TRANSFORMER SHALL HAVE 185°C INSULATION WITH 115°C WINDING TEMPERATURE RISE.

4. LOADCENTER SHALL COME WITH COPPER LOADCENTER CHASSIS FOR BOLT-ON BRANCH CIRCUIT BREAKERS. LOADCENTER SHALL COME WITH SEPARATE NEUTRAL AND COPPER BUSSES.

5. ALL BRANCH CIRCUIT BREAKERS SHALL BE GFCI TYPE.

6. PROVIDE STAINLESS STEEL SUPPORT AND BACKPLATE AND MOUNT MINI POWER CENTER TO BACKPLATE.

7. MINI POWER CENTER SHALL BE UL LISTED.

APPR	DATE	DESCRIPTION	STM

NAVFAC

COMMONWEALTH OF MASSACHUSETTS
BARRY E. SQUIRE
ELECTRICAL
No. 39611
REGISTERED
PROFESSIONAL ENGINEER
05/04/16
SEAL

MNFST
A JOINT VENTURE
A/E INFO

APPROVED
Contracting Officer
David W. Grunfeld
FOR COMMANDER NAVFAC

ACTIVITY:
PER DOCUMENT FROM PNSY
CODE 980, KITTERY ME

SATISFACTORY TO DATE: 05/09/16

DES: DPF | DRW: DPF | CHK: BDS

PM/DM: NATHAN LIBBY

BRANCH MANAGER: NATHAN MAHER

HEAD/PM&E: AMIN BAHROUR

FIRE PROTECTION: N/A

DEPARTMENT OF THE NAVY
NAVAL FACILITIES ENGINEERING COMMAND
PUBLIC WORKS DEPARTMENT - MAINE
PORTSMOUTH NAVAL SHIPYARD

NAVAL FACILITIES ENGINEERING COMMAND ~ MID-ATLANTIC
NAVAL SHIPYARD - PORTSMOUTH, NH

KITTERY, MAINE

STRUCTURAL REPAIRS
AT BERTHS 11A, 11B AND 11C

ELECTRICAL SCHEDULES

EPROJECT NO.: 1356489

CONSTR. CONTR. NO.
N40085-XX-C-XXXX

NAVFAC DRAWING NO.
12716140

SHEET 144 OF 144

E-601 | FP2-16-780

DRAWFORM REVISION: 10 OCTOBER 2014

FILE NAME: S:\1794\Active\1794102203\YP-104A PNSY Lifting Study\YP-104A PNSY Lifting Study\02 CADD\12 Electrical\FP2-16-780.dwg LAYOUT NAME: ELECTRICAL SCHEDULES PLOTTED: Friday, May 13, 2016 - 3:08pm USER: cgoodridge