SYMBOLS - POWER PLAN

- START/STOP, MOMENTARY CONTACT PUSHBUTTON SWITCH
- GROUND ROD
- FLOOR RECESSED STATIC GROUND
- $ SWITCH
  3 = 3-WAY
  4 = 4-WAY

RECEPTACLES (NEMA 5-20R UON)

- RECESSED SIMPLEX
- RECESSED DUPLEX S = SWITCHED
- RECESSED QUAD
- DUPLEX, CEILING MTD
- SPECIAL RECEPTACLE 1: NEMA 14-30
- SURFACE SIMPLEX
- SURFACE DUPLEX
- SURFACE QUAD

JUNCTION BOXES

- RECESSED JBOX, WALL MOUNTED
- SURFACE JBOX, WALL MOUNTED
- JBOX RECESSED IN FLOOR
- JBOX MOUNTED ABOVE CEILING (UNLESS OTHERWISE INDICATED)
- MECHANICAL EQUIPMENT CONNECTION

DISCONNECT SWITCHES (NEMA 1, 30A/3P, 480V UON)

- FUSED DISCONNECT SWITCH
- COMBO MOTOR STARTER/DISCONNECT
- MOTOR-RATED SWITCH (120V ONLY)

POWER DEVICES GENERAL INFORMATION

CKT: LP-x — PANELBOARD - CIRCUIT

(OR) J — ANY RECEPTACLE OR JBOX LISTED ABOVE

[EF-x] — EQUIPMENT IDENTIFICATION (JBOXES ONLY)

CASEWORK OR EQIUPMENT

CKT: LP1-1 — PANELBOARD - CIRCUIT "EXIST" INDICATES CONNECTION TO EXISTING CIRCUIT

CONDUIT

- WIRE IN CONDUIT, RUN CONCEALED ABOVE CEILING OR IN WALL (WHEN INDICATED). TICK MARKS INDICATE NUMBER OF HOT AND NEUTRAL CONDUCTORS.
  LONG TICK = HOT
  SHORT TICK = NEUTRAL
  NO TICK = (1) HOT, (1) NEUTRAL
- WIRE IN CONDUIT ROUTE BELOW GRADE OR FLOOR SLAB
- EXISTING WIRE IN CONDUIT TO BE DEMOLISHED AND REPLACED WITH NEW

COMMUNICATIONS GENERAL INFORMATION

V_1 (OR) D_1 — FACEPLATE TYPE (REFER TO COMM DETAILS ON SHEET ET501 FOR FACEPLATE TYPE)

GROUNDING SYMBOLS

- AIR STRIKE TERMINAL
- GROUND ROD
  T INDICATES TEST WELL

SYMBOL MODIFIERS

AC	ABOVE COUNTER
C	RECESSED IN CEILING
F	RECESSED IN FLOOR
GFI	GROUND FAULT CIRCUIT INTERRUPTER
L	LOCAL
IG	ISOLATED GROUND
MS	MASTER SWITCH
P	PILOT LIGHT (INDICATING SWITCH IS ON)
OS	OCCUPANCY SENSOR
S	SWITCHED RECEPTACLE
W	WALL MOUNTED, 48" AFF
WP	WEATHERPROOF IN USE

SPECIAL CALLOUT

- # CAMERA LOCATOR

LIGHTING FIXTURES

- REFER TO FIXTURE SCHEDULE SHEET E-603 FOR FIXTURE TYPE INFORMATION
- 2'X4' FIXTURE, UON
- 1'X4' FIXTURE, UON
- CEILING MOUNTED FIXTURE, UON
- EXIT SIGNS, CEILING: ARROW INDICATES EGRESS
- EXIT SIGNS, WALL: ARROW INDICATES EGRESS
- OS U/I — OCCUPANCY SENSOR, CEILING MOUNTED: SUBSCRIPT INDICATES TYPE
  U - ULTRASONIC SENSING
  U/I - DUAL UNTRASONIC AND INFRARED
  NONE - INFRARED SENSING
- $MS — SWITCH, SUBSCRIPT INDICATES TYPE.
  MS MASTER SWITCH. SEE DETAIL D1 SHEET E-604.
  3 THREE WAY
  VS VACANCY SENSOR. SEE DETAIL B1 SHEET E-604.
  OS OCCUPANCY SENSOR. SEE DETAIL B1 SHEET E-604.
- BUGEYE EMERGENCY FIXTURE

ABBREVIATIONS

A	AMPERES
AC	ALTERNATING CURRENT
AFF	ABOVE FINISHED FLOOR
AIC	AMPERES INTERRUPTING CAPACITY
ATS	ACCEPTANCE TESTING STANDARDS
AV	AUDIO/VIDEO
AWG	AMERICAN WIRE GAUGE
BAS	BUILDING AUTOMATION SYSTEM
C	CONDUIT
CAT	CATEGORY
CATV	CABLE TELEVISION
CCTV	CLOSED CIRCUIT TELEVISION
CL	CENTERLINE
COMM	COMMUNICATIONS
CO	COPIER
DC	DIRECT CURRENT
EGC	EQUIPMENT GROUNDING CONDUCTOR
EIA	ELECTRONICS INDUSTRIES ASSOCIATIONS
EMT	ELECTRICAL METALLIC TUBING
EPO	EMERGENCY POWER OFF
FBO	FURNISHED BY OTHERS
FID	FLIGHT INFORMATION DISPLAY
FO	FIBER OPTIC
FPD	FLAT PANEL DISPLAY
FT	FEET OR FOOT
GFI	GROUND FAULT INTERRUPTER
G OR GND	GROUND
GFR	GROUND FAULT RELAY
GFP	GROUND FAULT PROTECTION
GID	GATE INFORMATION DISPLAY
GRS	GALVANIZED RIGID STEEL CONDUIT
HID	HIGH INTENSITY DISCHARGE
HZ	HERTZ
IDS	INTRUSION DETECTION SYSTEM
IG	ISOLATED GROUND
ITM	INSTANT TICKET MACHINE
K	KILO
KCMIL	THOUSAND CIRCULAR MILS
KV	KILOVOLT AMPERES
KWH	KILOWATT HOURS
MAX	MAXIMUM
MCB	MAIN CIRCUIT BREAKER
MDP	MAIN DISTRIBUTION PANEL
MH	MANHOLE
MLO	MAIN LUGS ONLY
MM	MULTIMODE
MN/PA	MASS NOTIFICATION/PUBLIC ADDRESS
N	NEUTRAL CONDUCTOR
N.C.	NORMALLY CLOSED
NEC	NATIONAL ELECTRICAL CODE
NEMA	NATIONAL ELECTRICAL MANUFACTURER'S ASSOCIATION
NETA	NATIONAL ELECTRICAL TESTING ASSOCIATION
NFPA	NATIONAL FIRE PROTECTION ASSOCIATION
NIC	NOT IN CONTRACT
N.O.	NORMALLY OPEN
NTS	NOT TO SCALE
NUC	NEXT UNIT OF COMPUTING
OC	ON CENTER
P	POLE
PR	PAIR
PVC	POLYVINYL CHLORIDE
RGS	RIGID GALVANIZED STEEL CONDUIT
RMC	RIGID METAL CONDUIT
SCCR	SHORT CIRCUIT CURRENT RATING
SM	SINGLE-MODE
SPD	SURGE PROTECTION DEVICE
SPECS	CONTRACT SPECIFICATIONS
SPST	SINGLE POLE SINGLE THROW
STR	STRAND
TB	TELEPHONE BACKBOARD
TR	TELECOMMUNICATIONS ROOM
TVSS	TRANSIENT VOLTAGE SURGE SUPPRESSION
TYP	TYPICAL
UL	UNDERWRITERS' LABORATORIES
UON	UNLESS OTHERWISE NOTED
UTP	UNSHIELDED TWISTED PAIR
V	VOLTS
VA	VOLT AMPERES
W	WIRE OR WATT
WP	WEATHERPROOF
XFMR	TRANSFORMER
Z	IMPEDANCE

SYM	DESCRIPTION	DATE	APPR

NAVFAC

COMMONWEALTH OF VIRGINIA
JUSTIN C. CASHWELL
Lic. No.047237
5/4/16
PROFESSIONAL ENGINEER
SEAL

BURNS McDONNELL
1305 EXECUTIVE BLVD.
SUITE 160
CHESAPEAKE, VA 23320
A/E INFO.

APPROVED
David W. Grunfeld
FOR COMMANDER NAVFAC / B.L.T.L.

ACTIVITY
PER SAT-TO DOCUMENT FROM GERARD MONTANI (PM&BRANCH HEAD) WITH FEAD AT NAVAL STATION NEWPORT-NEWPORT, RI

SATISFACTORY TO DATE 4/20/16

DES	JCC	DRW	LAW	CHK	KMS
PM / DM	MLW/LEJ				
BRANCH MANAGER					
CHIEF ENG/ARCH		DWG			
FIRE PROTECTION					

DEPARTMENT OF THE NAVY
NAVAL FACILITIES ENGINEERING COMMAND
NORTH IPT
NAVAL FACILITIES ENGINEERING COMMAND ~ MID-ATLANTIC
NAVAL STATION NEWPORT
NEWPORT, RHODE ISLAND

RENOVATION OF NGIS, BUILDING 172

ELECTRICAL SYMBOLS, ABBREVIATIONS AND LEGEND

SCALE: AS NOTED
EPROJECT NO. 13770079
CONSTR. CONTR. NO.
NAVFAC DRAWING NO. 12719538
SHEET 153 OF 200

E-001

DRAWFORM REVISION: 10 MAY 2014

FILE NAME: C:\Revit_Projects\86232-NGISBldg172\Models\MEP\86232_E_jccashwell.rvt
REV/DATE: 5/2/2016 1:40:52 PM

GENERAL NOTES

1. THE ELECTRICAL CONTRACTOR SHALL VISIT THE SITE AND BECOME FAMILIAR WITH THE EXISTING CONDITIONS PRIOR TO COMMENCING WORK.
2. UNLESS INDICATED AS EXISTING, ALL MATERIALS AND LABOR SHALL BE CONSIDERED NEW.
3. ALL CONDUCTORS SHALL BE RUN IN CONDUIT, AND ALL CONDUIT SHALL BE CONCEALED UNLESS OTHERWISE NOTED ON THE DRAWINGS.
4. CONTRACTOR SHALL NOTIFY NAVFAC IF EXISTING OR NEW SWITCHBOARDS AND PANELBOARDS AFFECTED BY THIS PROJECT ARE NOT FIELD MARKED TO WARN QUALIFIED PERSONS OF POTENTIAL ELECTRIC ARC FLASH HAZARD IN ACCORDANCE WITH NFPA 70 AND 70E.
5. ALL SYSTEMS THAT REQUIRE COORDINATION BETWEEN TRADES SHALL BE TO THE SATISFACTION OF THE NAVFAC. ANY DEFICIENCIES, INCONSISTENCIES, OR POORLY COORDINATED INSTALLATIONS SHALL BE CORRECTED BY THE CONTRACTOR AT NO EXTRA COST TO NAVFAC.
6. ALL ELECTRICAL WORK SHALL COMPLY WITH NEC (NFPA 70), NFPA 72, NFPA 101, LOCAL CODES AND ORDINANCES. ALL GROUNDING SHALL COMPLY WITH NFPA 70, ART. 250.
7. PROVIDE A GREEN CONTINUOUS INSULATED EQUIPMENT GROUNDING CONDUCTOR TO ALL ELECTRICAL, TELECOMMUNICATIONS AND SECURITY EQUIPMENT SIZED PER NEC.
8. ARC FAULT PROTECTION SHALL BE PROVIDED IN ACCORDANCE WITH NEC (NFPA 70) ARTICLE 210.22.
9. GROUND CONDUCTORS ARE NOT INDICATED IN BRANCH CIRCUIT RACEWAYS. PROVIDE GROUND CONDUCTORS IN ACCORDANCE WITH NEC AND AS SPECIFIED.
10. LIGHT FIXTURE MOUNTING HEIGHTS ARE MEASURED FROM BOTTOM OF FIXTURE.
11. FOR SWITCHED DUPLEX RECEPTACLES THE TOP RECEPTACLE IS TO BE SWITCHED.

EXISTING CONDITIONS

1. ALL EXISTING EQUIPMENT AND DEVICES TO REMAIN SHALL STAY INTACT AND OPERATIONAL DURING THE CONSTRUCTION PROCESS. IF A DEVICE REQUIRING POWER IS DISTURBED OR INTERRUPTED, RESTORE THE DEVICE TO ITS ORIGINAL OPERATIONAL STATE. ANY DEMOLITION WORK REQUIRING MODIFICATION OF EXISTING ELECTRICAL SYSTEMS SHALL NOT COMPROMISE THE SYSTEMS TO REMAIN. INSTALL NEW CONDUIT AND WIRING WHERE NECESSARY TO RESTORE POWER PER NEC REQUIREMENTS.
2. ALL ELECTRICAL EQUIPMENT AND DEVICES TO BE REMOVED SHALL HAVE CONDUCTORS AND CONDUIT TO THE DEVICE COMPLETELY REMOVED, EXCEPT AS NOTED. ALL COMMUNICATION DEVICES TO BE REMOVED SHALL HAVE CABLES AND CONDUIT TO THE DEVICE COMPLETELY REMOVED. WHERE CONDUIT REMOVAL IS NOT POSSIBLE, CAP CONDUIT AND MAKE SAFE. POWER AND COMMUNICATIONS CONDUITS MAY BE RE-USED WHERE POSSIBLE. WHERE BACKBOXES CAN NOT BE REMOVED, PROVIDE A BLANK COVERPLATE. ALL REMOVED CONDUIT, OLD BOXES, WIRING AND MISCELLANEOUS ELECTRICAL SCRAP SHALL BE REMOVED FROM THE JOB SITE.
3. THE CONTRACTOR SHALL BE RESPONSIBLE TO RESTORE ALL INTERIOR/EXTERIOR WALLS, CEILINGS, FLOORS, AND CONCRETE WORK REQUIRING PATCHING, PLASTERING, PAINTING AND ANY OTHER REPAIRS DUE TO ELECTRICAL WORK TO RESTORE THE ORIGINAL FINISH AND APPEARANCE.
4. ALL VOICE AND DATA COMMUNICATION CABLES SHALL BE INSTALLED IN CONDUIT, CABLE TRAY OR OTHER ACCEPTABLE MEANS APPROVED BY NAVFAC.
5. ALL NEW AND EXISTING PANEL DIRECTORIES AFFECTED BY THIS PROJECT SHALL BE REPLACED WITH NEW TYPED CARD STOCK DIRECTORY THAT INCLUDES THE DATE OF MODIFICATION.
6. ALL EXISTING CABLES NOT TO BE REUSED SHALL BE REMOVED FROM CONDUIT AND CABLE TRAY.

DEMOLITION NOTES

1. ALL ELECTRICAL EQUIPMENT AND DEVICES TO BE REMOVED: COMPLETELY REMOVE ALL CONDUCTORS AND CONDUIT TO THE DEVICE. WHERE CONDUIT REMOVAL IS NOT POSSIBLE, CAP CONDUIT AND MAKE SAFE. WHERE BACKBOXES CAN NOT BE REMOVED PROVIDE A BLANK COVERPLATE. ALL REMOVED CONDUIT, OLD BOXES, WIRING AND MISCELLANEOUS ELECTRICAL SCRAP SHALL BE REMOVED FROM THE PROJECT SITE.
2. THE CONTRACTOR SHALL BE RESPONSIBLE TO RESTORE ALL INTERIOR/EXTERIOR WALLS, CEILINGS, FLOORS, AND CONCRETE WORK REQUIRING PATCHING, PLASTERING, PAINTING AND ANY OTHER REPAIRS DUE TO ELECTRICAL WORK TO RESTORE THE ORIGINAL FINISHES AND APPEARANCE.

LIGHTING SEQUENCE OF OPERATIONS:

1. TYPICAL OCCUPANCY ONLY CONTROL (PUBLIC RESTROOMS AND STORAGE): OCCUPANCY SENSORS SHALL ILLUMINATE ALL LIGHTING IN THE SPACE UPON DETECTION OF A PERSON ENTERING THE SPACE. IF OCCUPANCY SENSORS DETECT NO MOTION, THE LIGHTING SHALL BE TURNED OFF AFTER A SET TIME DELAY. TIME DELAY SHALL BE ADJUSTABLE FROM 3 TO 20 MINTUES, INITIAL SETTING = 5 MINUTES. UTILIZE ULTRASONIC SENSORS IN RESTROOMS AND OTHER SPACES WHERE THE OCCUPANT MAY BE BLOCKED FROM DIRECT LINE OF SIGHT TO THE SENSOR.
2. TYPICAL VACANCY CONTROL:
   USER SHALL MANUALLY ILLUMINATE ALL LIGHTING IN THE SPACE UPON ENTERING. IF OCCUPANCY SENSORS DETECT NO MOTION, THE LIGHTING SHALL BE TURNED OFF AFTER A SET TIME DELAY. TIME DELAY SHALL BE ADJUSTABLE FROM 3 TO 20 MINTUES, INITIAL SETTING = 5 MINUTES. UTILIZE ULTRASONIC SENSORS IN RESTROOMS AND OTHER SPACES WHERE THE OCCUPANT MAY BE BLOCKED FROM DIRECT LINE OF SIGHT TO THE SENSOR.
3. EMERGENCY FIXTURES:
   SHALL OPERATE IN CONJUNCTION WITH THE SURROUNDING FIXTURES UNDER NORMAL CONDITIONS. UPON LOSS OF POWER THE EMERGENCY BATTERY PACKS SHALL SWITCH THE FIXTURE ON FOR ATLEAST 90 MINUTES.
4. MANUAL MASTER OVERRIDE SWITCH (GUEST ROOMS AND SUITES):
   IN GUEST SUITES, A MASTER CONTROL DEVICE SHALL BE WIRED AHEAD OF ALL LOCAL LIGHTING CONTROLS, MANUALLY SHUTTING OFF ALL LIGHTING UPON OCCUPANT EXITING THE ROOM. THIS SHALL INCLUDE THE OVERRIDE OF ALL LIGHTING CIRCUITS AND SPLIT WIRED SWITCHED RECEPTACLES, AS INDICATED. SEE DETAIL D1 "TYPICAL SUITE MASTER CONTROL DIAGRAM" ON SHEET E-604.
5. STAIRWELL LIGHT FIXTURES SHALL ILLUMINATE TO 100% WHEN OCCUPANCY IS DETECTED. IF OCCUPANCY SENSORS DETECT NO MOTION, THE LIGHTING SHALL BE DIMMED TO 50% AFTER A SET TIME DELAY. TIME DELAY SHALL BE ADJUSTABLE FROM 3 TO 20 MINTUES, INITIAL SETTING = 15 MINUTES.

TYPICAL DEVICE MOUNTING DETAIL AND NOTES

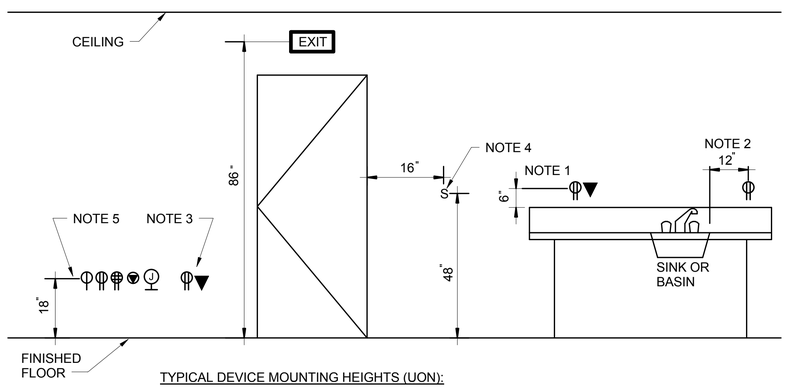

TYPICAL DEVICE MOUNTING HEIGHTS (UON):

REF	REFRIGERATOR, 18" AFF
VM	VENDING MACHINE, 24" AFF
CO	COPIER, 18" AFF
CZ	COMM ZONE CABINET, MOUNT WITHIN CABINET
PR	PRINTER, 46" AFF
FPD	FLAT PANEL DISPLAY, 72" AFF (NOTE 6)
TV	TELEVISION, 72" AFF (NOTE 6)
SB	SMART BOARD, 72" AFF (NOTE 6)
WC	WALL-MOUNTED CLOCK, 96" AFF (NOTE 6)
WF	WATER COOLER (NOTE 7)
AC	ABOVE COUNTER, SEE "DEVICE MOUNTING NOTES", (NOTE 1)

1. COORDINATE ABOVE COUNTER DEVICES AND RECEPTACLES WITH CASEWORK OR COUNTERS SUCH THAT THE DEVICES AND RECEPTACLES ARE LOCATED AT +42" AFF OR 6" ABOVE THE COUNTERTOP OR BACKSPLASH, WHICHEVER IS HIGHER.
2. ALL RECEPTACLES INSTALLED WITHIN 6'-0" OF ANY SINK OF BASIN SHALL HAVE GFI PROTECTION. DO NOT INSTALL RECEPTACLES WITHIN 12" OF THE EDGE OF A SINK OR BASIN.
3. COORDINATE WITH THE COMMUNICATIONS DRAWINGS TO ENSURE THAT A DUPLEX RECEPTACLE IS INSTALLED WITHIN 18" HORIZONTAL TO ALL SIGNAL AND DATA DEVICE LOCATIONS.
4. SWITCHES AND OTHER FLUSH WALL-MOUNTED DEVICES SHALL BE MOUNTED WITHIN 16" OF DOORFRAME. COORDINATE WITH ARCHITECTURAL DRAWINGS FOR DOORS WITH ADJACENT SIDELIGHTS. WHERE DEVICES ARE SHOWN ADJACENT TO THE DOOR ON THE HINGE-SIDE OF THE DOOR, AND THE DOOR SWINGS IN A MANNER THAT SHALL BLOCK THE DEVICE, MOUNT THE DEVICE 12" BEYOND THE DOOR SWING. COORDINATE ROUGH-IN LOCATIONS WITH DIV. 27 AND 28 DEVICES AS WELL. COORDINATE MOUNTING LOCATION WITH OTHER TRADES TO ENSURE A UNIFORM MOUNTING AND AESTHETICALLY-PLEASING APPEARANCE.
5. MOUNTING HEIGHT INDICATED IN LEGEND AND ON THE DRAWINGS SHALL BE THE DISTANCE MEASURED FROM THE CENTER OF THE DEVICE TO THE FINISHED FLOOR.
6. COORDINATE FINAL RECEPTACLE HEIGHT AND LOCATION WITH ARCHITECTURAL/INTERIORS PLANS.
7. COORDINATE FINAL RECEPTACLE HEIGHT AND LOCATION WITH MANUFACTURER REQUIREMENTS.

SYM	DESCRIPTION	DATE	APPR

NAVFAC

COMMONWEALTH OF VIRGINIA
JUSTIN C. CASHWELL
Lic. No.047237
5/4/16
PROFESSIONAL ENGINEER
SEAL

BURNS McDONNELL
1305 EXECUTIVE BLVD.
SUITE 160
CHESAPEAKE, VA 23320
A/E INFO

APPROVED
FOR COMMANDER NAVFAC / B.L.T.L.

ACTIVITY
PER SAT-TO DOCUMENT FROM GERARD MONTANI (PM&BRANCH HEAD) WITH FEAD AT NAVAL STATION NEWPORT-NEWPORT, RI

SATISFACTORY TO DATE 4/20/16

DES JCC	DRW LAW	CHK KMS

PM / DM MLW/LEJ
BRANCH MANAGER
CHIEF ENG/ARCH DWG
FIRE PROTECTION

DEPARTMENT OF THE NAVY
NAVAL FACILITIES ENGINEERING COMMAND
NORTH IPT
NAVAL FACILITIES ENGINEERING COMMAND ~ MID-ATLANTIC
NAVAL STATION NEWPORT
NEWPORT, RHODE ISLAND
NEWPORT, RHODE ISLAND
RENOVATION OF NGIS, BUILDING 172
ELECTRICAL DEMOLITION AND PHASING REQUIREMENTS

SCALE: AS NOTED
EPROJECT NO. 13770079
CONSTR. CONTR. NO.
NAVFAC DRAWING NO. 12719539
SHEET 154 OF 200
E-002

DRAWFORM REVISION: 10 MAY 2014

FILE NAME: C:\Revit_Projects\86232-NGISBldg172\Models\MEP\86232_E_jccashwell.rvt
REV/DATE: 5/2/2016 1:40:52 PM

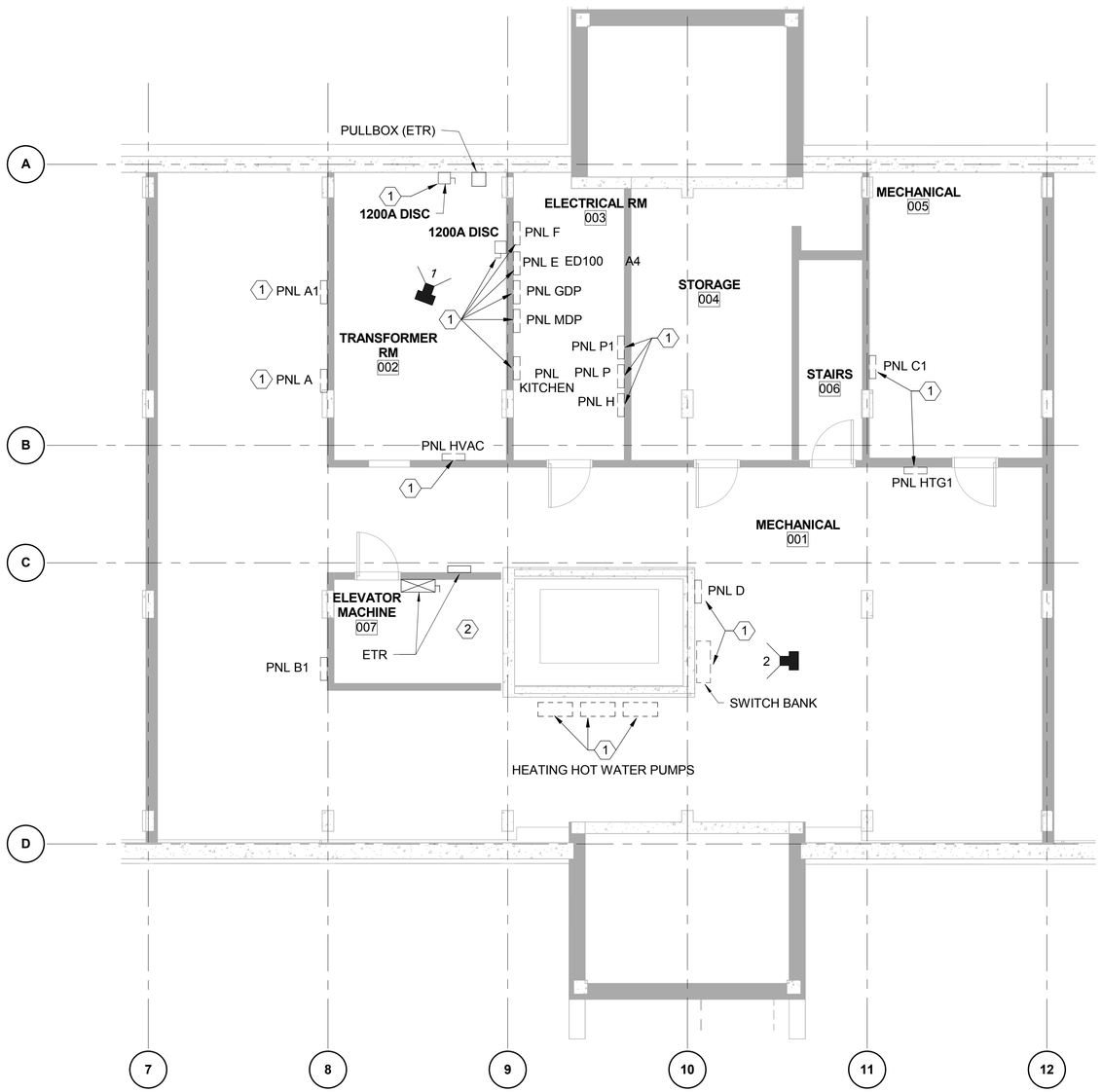

PLAN NORTH

ELECTRICAL DEMOLITION PLAN - BASEMENT

SCALE: 3/16" = 1'-0"

1 BASEMENT DISCONNECT

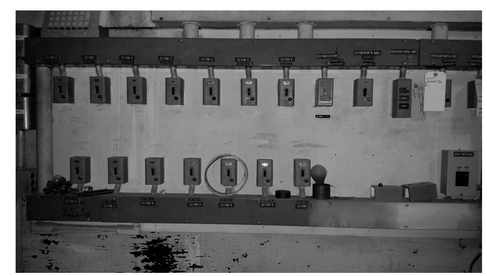

2 SWITCH BANK

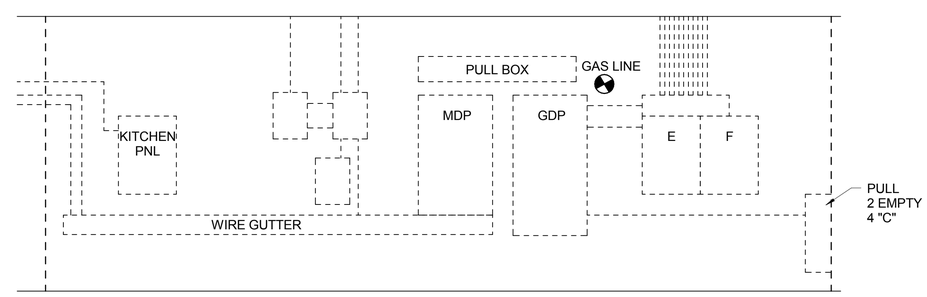

A4 DEMOLITION BASEMENT ELEVATION

SCALE: NOT TO SCALE

GENERAL NOTES:

1. THIS SHEET SHALL READ IN CONJUNCTION WITH ALL OTHER CONTRACT DOCUMENTS.
2. DRAWINGS ARE BASED ON EXISTING BUILDING DOCUMENTS AND FIELD OBSERVATION. CONTRACTOR SHALL FIELD VERIFY EXISTING CONDITIONS PRIOR TO COMMENCMENT OF WORK.
3. SEE E-001 AND E-002 FOR ELECTRICAL LEGEND, ABBREVIATIONS AND GENERAL NOTES.

DEMOLITION NOTES:

1. DEMOLISH EQUIPMENT IN ENTIRETY. REMOVE BRANCH CIRCUIT WIRING AND ASSOCIATED FEEDERS BACK TO SOURCE.
2. ELEVATOR EQUIPMENT IN ELEVATOR MACHINE ROOM IS ALL EXISTING TO REMAIN, INCLUDING SHUNT TRIP BREAKER, PIT LIGHTING, ETC. CONTRACTOR TO REUSE EXISTING CIRCUITING AND PATHWAYS WHEREVER FEASIBLE. CIRCUITS SHALL BE EXTENDED TO PANEL AC-1A, UON.

GRAPHIC SCALE:

3/16" =1'-0" 0' 4' 8' 12'

SYM	DESCRIPTION	DATE	APPR

NAVFAC

COMMONWEALTH OF VIRGINIA
JUSTIN C. CASHWELL
Lic. No.047237
5/4/16
PROFESSIONAL ENGINEER
SEAL

BURNS McDONNELL
1305 EXECUTIVE BLVD.
SUITE 160
CHESAPEAKE, VA 23320
A/E INFO

APPROVED
FOR COMMANDER NAVFAC / B.L.T.L.

ACTIVITY
PER SAT-TO DOCUMENT FROM GERARD MONTANI (PM&BRANCH HEAD) WITH FEAD AT NAVAL STATION NEWPORT NEWPORT, RI

SATISFACTORY TO DATE 4/20/16

DES JCC	DRW LAW	CHK KMS
PM / DM	MLW/LEJ	
BRANCH MANAGER		
CHIEF ENG/ARCH	DWG	
FIRE PROTECTION		

DEPARTMENT OF THE NAVY
NAVAL FACILITIES ENGINEERING COMMAND
NORTH IPT
NAVAL FACILITIES ENGINEERING COMMAND ~ MID-ATLANTIC
NAVAL STATION NEWPORT
NEWPORT, RHODE ISLAND
NEWPORT, RHODE ISLAND
RENOVATION OF NGIS, BUILDING 172
ELECTRICAL DEMOLITION PLAN - BASEMENT

SCALE: AS NOTED
EPROJECT NO. 13770079
CONSTR. CONTR. NO.
NAVFAC DRAWING NO. 12719540
SHEET 155 OF 200
ED100

DRAWFORM REVISION: 10 MAY 2014

FILE NAME: C:\Revit_Projects\86232-NGISB\dg172\Models\MEP\86232_E_jcashwell.rvt
REV/DATE: 5/2/2016 1:41:14 PM

GENERAL NOTES:

1. THIS SHEET SHALL READ IN CONJUNCTION WITH ALL OTHER CONTRACT DOCUMENTS.
2. DRAWINGS ARE BASED ON EXISTING BUILDING DOCUMENTS AND FIELD OBSERVATION. CONTRACTOR SHALL FIELD VERIFY EXISTING CONDITIONS PRIOR TO COMMENCMENT OF WORK.
3. SEE E-001 AND E-002 FOR ELECTRICAL LEGEND, ABBREVIATIONS AND GENERAL NOTES.

DEMOLITION NOTES:

1. DEMOLISH ALL EXISTING ELECTRICAL AND COMMUNICATION DEVICES, LIGHTING, MECHANICAL PTAC UNITS, AND EXHAUST FANS, ALONG WITH ALL ASSOCIATED WIRING BACK TO POINT OF ORIGIN.
2. ALL DISTRIBUTION RISERS / CONDUIT AND CHASES ARE EXISTING TO REMAIN. THESE CONDUIT RISERS ORIGINATE AT THE BASEMENT LEVEL, AND EXISTING SLAB PENETRATIONS WILL BE USED FOR ELECTRICAL DISTRIBUTION DURING RENOVATION.

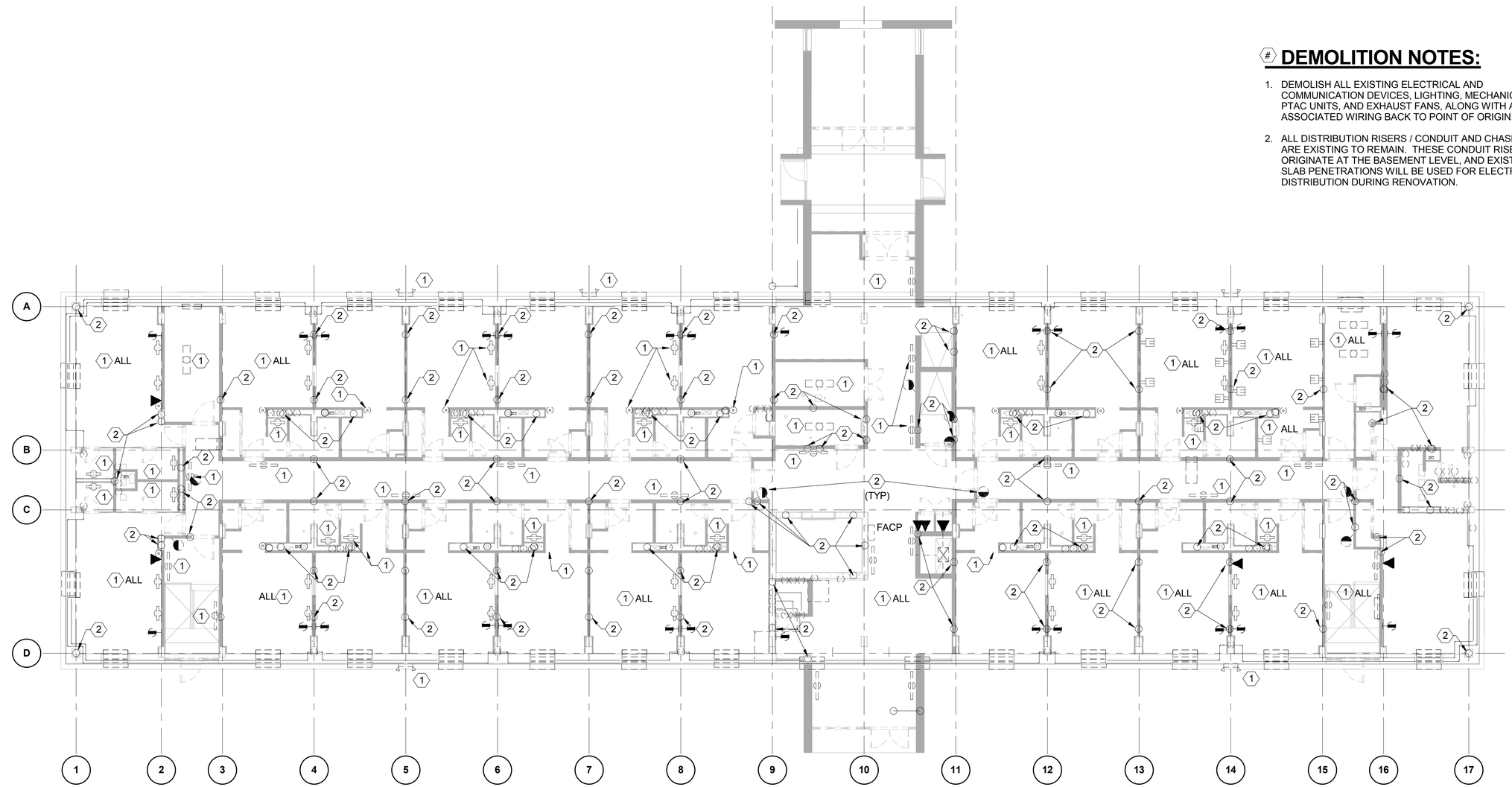

PLAN NORTH

ELECTRICAL DEMOLITION PLAN - 1ST FLOOR

SCALE: 1/8" = 1'-0"

GRAPHIC SCALE:

1/8" =1'-0" 0' 4' 8' 16'

SYM	DESCRIPTION	DATE	APPR

NAVFAC

COMMONWEALTH OF VIRGINIA
JUSTIN C. CASHWELL
Lic. No.047237
5/4/16
PROFESSIONAL ENGINEER
SEAL

BURNS McDONNELL
1305 EXECUTIVE BLVD.
SUITE 160
CHESAPEAKE, VA 23320
A/E INFO

APPROVED
David W. Grunfeld
FOR COMMANDER NAVFAC / B.L.T.L.

ACTIVITY
PER SAT-TO DOCUMENT FROM GERARD MONTANI (PM&BRANCH HEAD) WITH FEAD AT NAVAL STATION NEWPORT-NEWPORT, RI

SATISFACTORY TO DATE 4/20/16

DES	JCC	DRW	LAW	CHK	KMS
PM / DM	MLW/LEJ				
BRANCH MANAGER					
CHIEF ENG/ARCH	DWG				
FIRE PROTECTION					

DEPARTMENT OF THE NAVY
NAVAL FACILITIES ENGINEERING COMMAND
NORTH IPT
NAVAL FACILITIES ENGINEERING COMMAND ~ MID-ATLANTIC
NAVAL STATION NEWPORT
NEWPORT, RHODE ISLAND
NEWPORT, RHODE ISLAND
RENOVATION OF NGIS, BUILDING 172
ELECTRICAL DEMOLITION PLAN - FIRST FLOOR

SCALE: AS NOTED
EPROJECT NO. 13770079
CONSTR. CONTR. NO.
NAVFAC DRAWING NO. 12719541
SHEET 156 OF 200
ED101

DRAWFORM REVISION: 10 MAY 2014

FILE NAME: C:\Revit_Projects\86232-NGISB\dg172\Models\MEP\86232_E_jcashwell.rvt
REV/DATE: 5/2/2016 1:41:16 PM

GENERAL NOTES:

1. THIS SHEET SHALL READ IN CONJUNCTION WITH ALL OTHER CONTRACT DOCUMENTS.
2. DRAWINGS ARE BASED ON EXISTING BUILDING DOCUMENTS AND FIELD OBSERVATION. CONTRACTOR SHALL FIELD VERIFY EXISTING CONDITIONS PRIOR TO COMMENCMENT OF WORK.
3. SEE E-001 AND E-002 FOR ELECTRICAL LEGEND, ABBREVIATIONS AND GENERAL NOTES.

DEMOLITION NOTES:

1. DEMOLISH ALL EXISTING ELECTRICAL AND COMMUNICATION DEVICES, LIGHTING, MECHANICAL PTAC UNITS, AND EXHAUST FANS, ALONG WITH ALL ASSOCIATED WIRING BACK TO POINT OF ORIGIN.
2. ALL DISTRIBUTION RISERS / CONDUIT AND CHASES ARE EXISTING TO REMAIN. THESE CONDUIT RISERS ORIGINATE AT THE BASEMENT LEVEL, AND EXISTING SLAB PENETRATIONS WILL BE USED FOR ELECTRICAL DISTRIBUTION DURING RENOVATION.

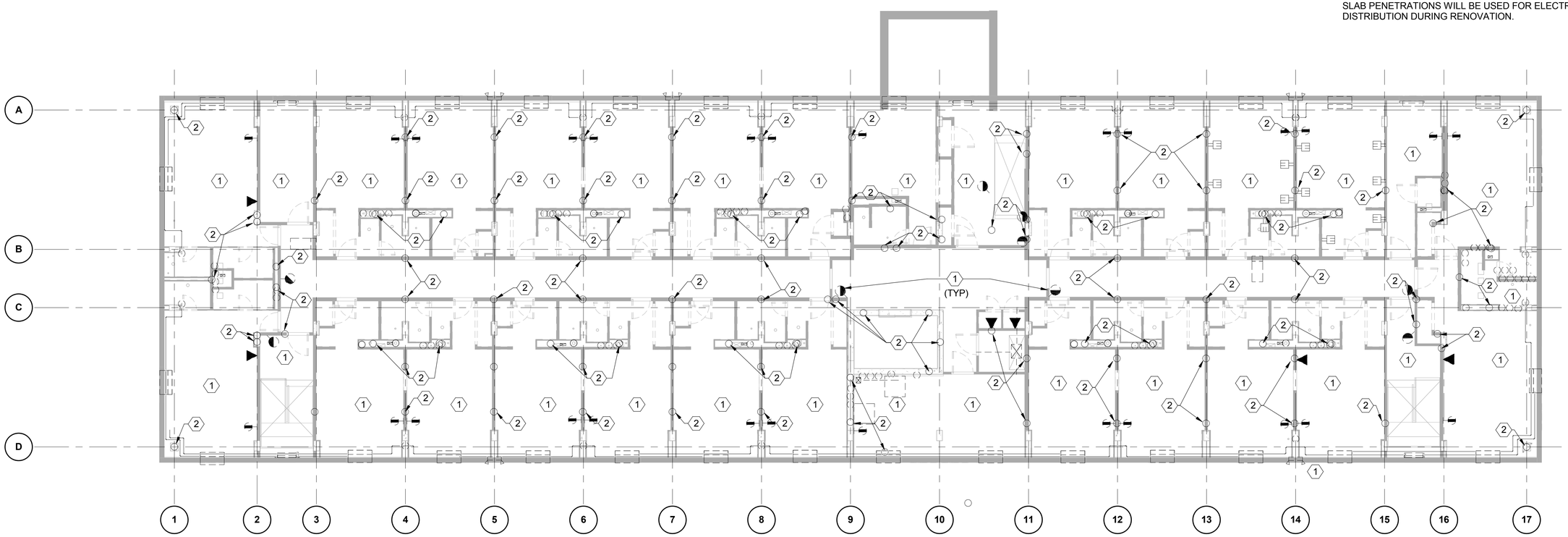

PLAN NORTH

ELECTRICAL DEMOLITION PLAN - 2ND FLOOR

SCALE: 1/8" = 1'-0"

GRAPHIC SCALE:

1/8" =1'-0" 0' 4' 8' 16'

SYM	DESCRIPTION	DATE	APPR

NAVFAC

COMMONWEALTH OF VIRGINIA
JUSTIN C. CASHWELL
Lic. No.047237
5/4/16
PROFESSIONAL ENGINEER
SEAL

BURNS McDONNELL
1305 EXECUTIVE BLVD.
SUITE 160
CHESAPEAKE, VA 23320
A/E INFO

APPROVED
David W. Grunfeld
FOR COMMANDER NAVFAC / B.L.T.L.

ACTIVITY
PER SAT.TO DOCUMENT FROM GERARD MONTANI (PM&BRANCH HEAD) WITH FEAD AT NAVAL STATION NEWPORT-NEWPORT, RI

SATISFACTORY TO DATE 4/20/16

DES JCC	DRW LAW	CHK KMS
PM / DM	MLW/LEJ	
BRANCH MANAGER		
CHIEF ENG/ARCH	DWG	
FIRE PROTECTION		

DEPARTMENT OF THE NAVY
NAVAL FACILITIES ENGINEERING COMMAND
NORTH IPT
NAVAL FACILITIES ENGINEERING COMMAND ~ MID-ATLANTIC
NAVAL STATION NEWPORT
NEWPORT, RHODE ISLAND
NEWPORT, RHODE ISLAND

RENOVATION OF NGIS, BUILDING 172

ELECTRICAL DEMOLITION PLAN - SECOND FLOOR

SCALE: AS NOTED
EPROJECT NO. 13770079
CONSTR. CONTR. NO.
NAVFAC DRAWING NO. 12719542
SHEET 157 OF 200

ED102

DRAWFORM REVISION: 10 MAY 2014

FILE NAME: C:\Revit_Projects\86232-NGISB\dg172\Models\MEP\86232_E_jccashwell.rvt

REV/DATE: 5/2/2016 1:41:18 PM

GENERAL NOTES:

1. THIS SHEET SHALL READ IN CONJUNCTION WITH ALL OTHER CONTRACT DOCUMENTS.
2. DRAWINGS ARE BASED ON EXISTING BUILDING DOCUMENTS AND FIELD OBSERVATION. CONTRACTOR SHALL FIELD VERIFY EXISTING CONDITIONS PRIOR TO COMMENCMENT OF WORK.
3. SEE E-001 AND E-002 FOR ELECTRICAL LEGEND, ABBREVIATIONS AND GENERAL NOTES.

DEMOLITION NOTES:

1. DEMOLISH ALL EXISTING ELECTRICAL AND COMMUNICATION DEVICES, LIGHTING, MECHANICAL PTAC UNITS, AND EXHAUST FANS, ALONG WITH ALL ASSOCIATED WIRING BACK TO POINT OF ORIGIN.
2. ALL DISTRIBUTION RISERS / CONDUIT AND CHASES ARE EXISTING TO REMAIN. THESE CONDUIT RISERS ORIGINATE AT THE BASEMENT LEVEL, AND EXISTING SLAB PENETRATIONS WILL BE USED FOR ELECTRICAL DISTRIBUTION DURING RENOVATION.

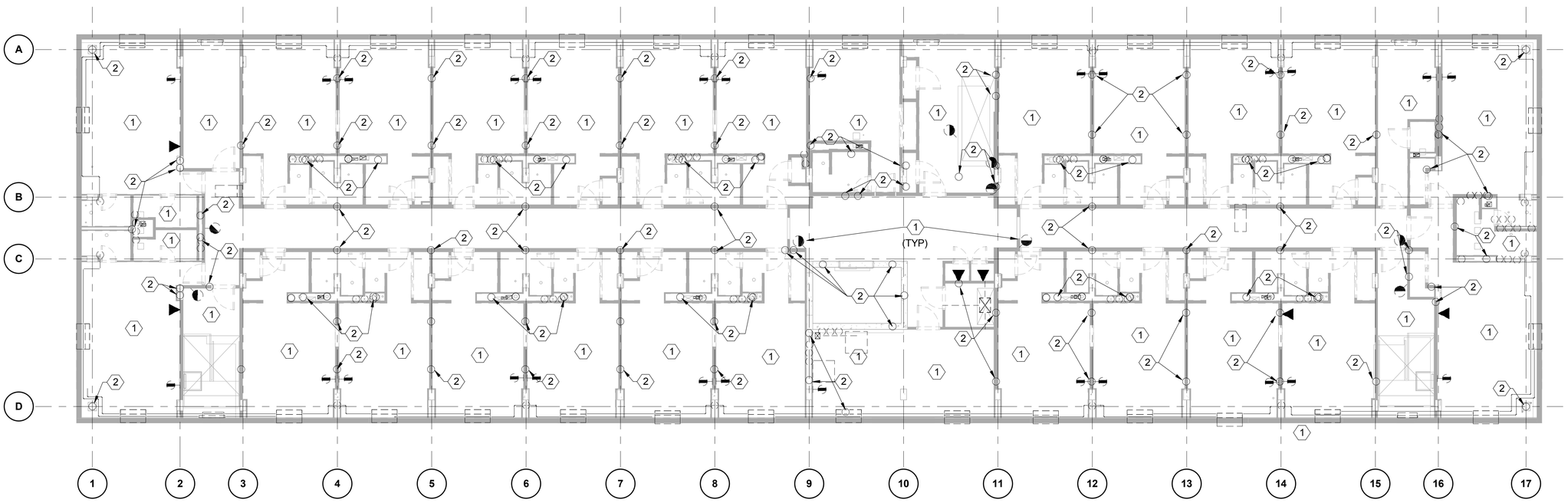

PLAN NORTH

ELECTRICAL DEMOLITION PLAN - 3RD FLOOR

SCALE: 1/8" = 1'-0"

GRAPHIC SCALE:

1/8" =1'-0" 0' 4' 8' 16'

SYM	DESCRIPTION	DATE	APPR

NAVFAC

COMMONWEALTH OF VIRGINIA
JUSTIN C. CASEWELL
Lic. No.047237
5/4/16
PROFESSIONAL ENGINEER
SEAL

BURNS McDONNELL
1305 EXECUTIVE BLVD.
SUITE 160
CHESAPEAKE, VA 23320
A/E INFO

APPROVED
David W. Grunfeld
FOR COMMANDER NAVFAC / B.L.T.L.

ACTIVITY
PER SAT-TO DOCUMENT FROM GERARD MONTANI (PM&BRANCH HEAD) WITH FEAD AT NAVAL STATION NEWPORT NEWPORT, RI

SATISFACTORY TO DATE 4/20/16

DES JCC	DRW LAW	CHK KMS

PM / DM MLW/LEJ
BRANCH MANAGER
CHIEF ENG/ARCH DWG
FIRE PROTECTION

DEPARTMENT OF THE NAVY
NAVAL FACILITIES ENGINEERING COMMAND
NORTH IPT
NAVAL FACILITIES ENGINEERING COMMAND ~ MID-ATLANTIC
NAVAL STATION NEWPORT
NEWPORT, RHODE ISLAND
NEWPORT, RHODE ISLAND
RENOVATION OF NGIS, BUILDING 172
ELECTRICAL DEMOLITION PLAN - THIRD FLOOR

SCALE: AS NOTED
EPROJECT NO. 13770079
CONSTR. CONTR. NO.
NAVFAC DRAWING NO. 12719543
SHEET 158 OF 200
ED103

DRAWFORM REVISION: 10 MAY 2014

FILE NAME: C:\Revit_Projects\86232-NGISB\dg172\Models\MEP\86232_E_jccashwell.rvt
REVDATE: 5/2/2016 1:41:20 PM

GENERAL NOTES:

1. THIS SHEET SHALL READ IN CONJUNCTION WITH ALL OTHER CONTRACT DOCUMENTS.
2. DRAWINGS ARE BASED ON EXISTING BUILDING DOCUMENTS AND FIELD OBSERVATION. CONTRACTOR SHALL FIELD VERIFY EXISTING CONDITIONS PRIOR TO COMMENCMENT OF WORK.
3. SEE E-001 AND E-002 FOR ELECTRICAL LEGEND, ABBREVIATIONS AND GENERAL NOTES.

DEMOLITION NOTES:

1. DEMOLISH ALL EXISTING ELECTRICAL AND COMMUNICATION DEVICES, LIGHTING, MECHANICAL PTAC UNITS, AND EXHAUST FANS, ALONG WITH ALL ASSOCIATED WIRING BACK TO POINT OF ORIGIN.
2. ALL DISTRIBUTION RISERS / CONDUIT AND CHASES ARE EXISTING TO REMAIN. THESE CONDUIT RISERS ORIGINATE AT THE BASEMENT LEVEL, AND EXISTING SLAB PENETRATIONS WILL BE USED FOR ELECTRICAL DISTRIBUTION DURING RENOVATION.

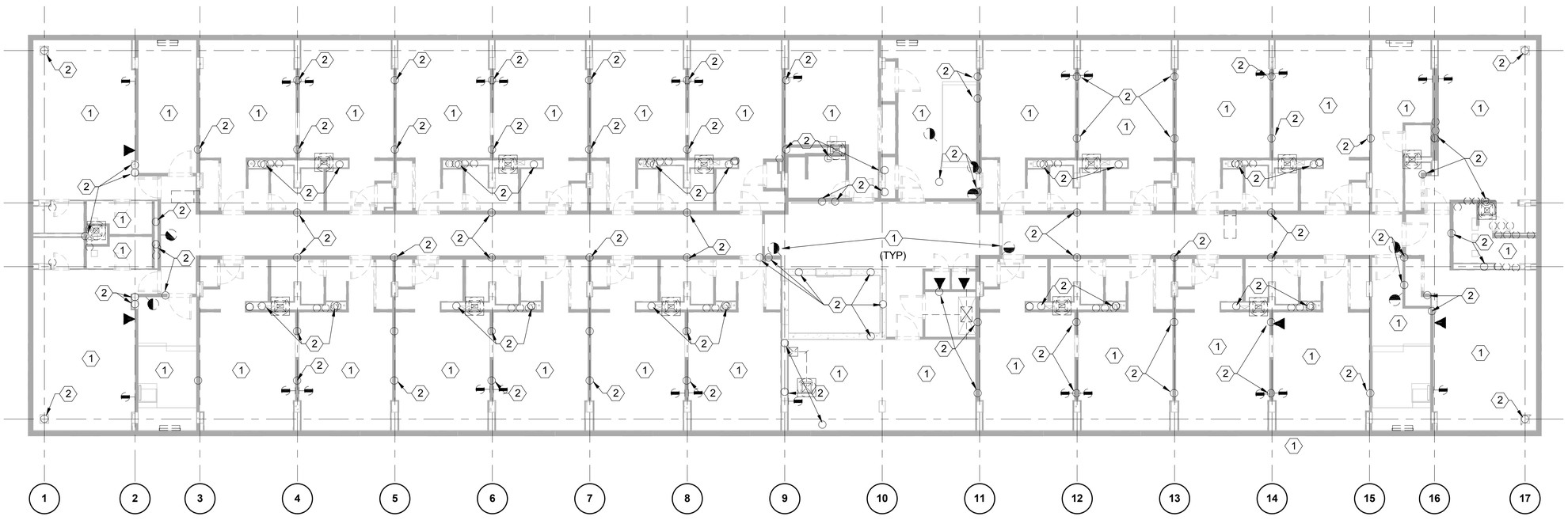

PLAN NORTH

ELECTRICAL DEMOLITION PLAN - 4TH FLOOR

SCALE: 1/8" = 1'-0"

GRAPHIC SCALE:

1/8" =1'-0" 0' 4' 8' 16'

SYM	DESCRIPTION	DATE	APPR

NAVFAC

COMMONWEALTH OF VIRGINIA
JUSTIN C. CASEWELL
Lic. No.047237
5/4/16
PROFESSIONAL ENGINEER
SEAL

BURNS McDONNELL
1305 EXECUTIVE BLVD.
SUITE 160
CHESAPEAKE, VA 23320
A/E INFO

APPROVED
FOR COMMANDER NAVFAC / B.L.T.L.

ACTIVITY
PER SAT-TO DOCUMENT FROM GERARD MONTANI (PM&BRANCH HEAD) WITH FEAD AT NAVAL STATION NEWPORT-NEWPORT, RI

SATISFACTORY TO DATE 4/20/16

DES	DRW	CHK
JCC	LAW	KMS

PM / DM MLW/LEJ
BRANCH MANAGER
CHIEF ENG/ARCH DWG
FIRE PROTECTION

DEPARTMENT OF THE NAVY
NAVAL FACILITIES ENGINEERING COMMAND
NORTH IPT
NAVAL FACILITIES ENGINEERING COMMAND - MID-ATLANTIC
NEWPORT, RHODE ISLAND
NAVAL STATION NEWPORT
NEWPORT, RHODE ISLAND
RENOVATION OF NGIS, BUILDING 172
ELECTRICAL DEMOLITION PLAN - FOURTH FLOOR

SCALE: AS NOTED
EPROJECT NO. 13770079
CONSTR. CONTR. NO.
NAVFAC DRAWING NO. 12719544
SHEET 159 OF 200
ED104

DRAWFORM REVISION: 10 MAY 2014

FILE NAME: C:\Revit_Projects\86232-NGISBldg172\Models\MEP\86232_E_jccashwell.rvt
REVDATE: 5/2/2016 1:41:22 PM

FEEDER SCHEDULE

MARK ◇	PARALLEL RUNS	NO. OF CONDUCTORS	FEEDER WIRE SIZE	GND COND. SIZE	CONDUIT SIZE SEE NOTE 1 BELOW
1	1		PRI FEEDER	SIZE UNKNOWN	
2	2	4	750 KCMIL	#1/0	EXST CONDUIT
3	1	4	750 KCMIL	#1/0	EXST CONDUIT
4	1	4	#2/0	#6	2-1/2"
5	1	4	#4	#8	1-1/2"
6	1	4	#8	#10	1"
7	1	4	#1	#6	2"
8	1	4	#3	#6	1-1/2"
9	1	4	#6	#10	1"

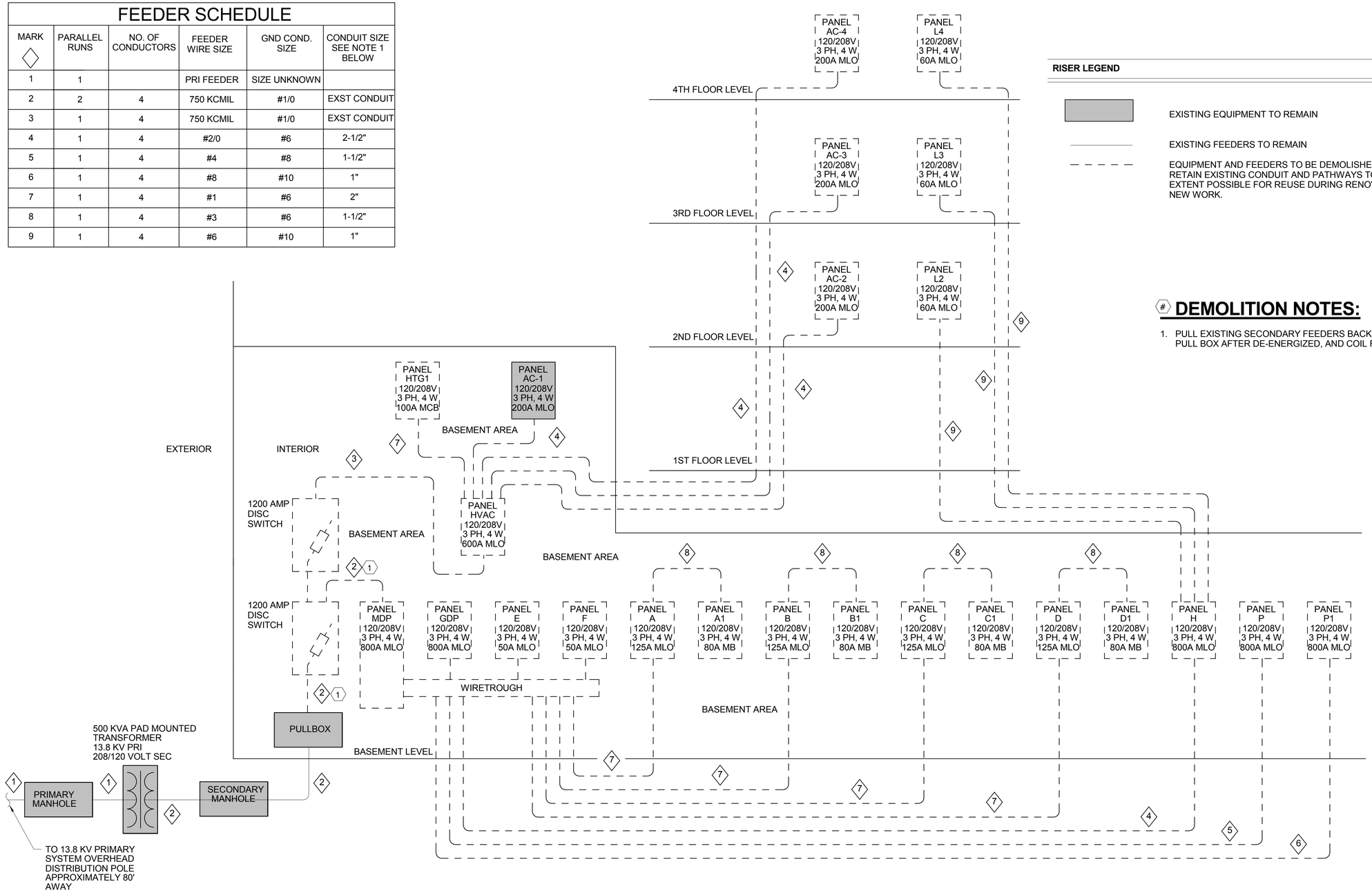

DEMO ELECTRICAL RISER

SCALE: NOT TO SCALE

RISER LEGEND

- EXISTING EQUIPMENT TO REMAIN
- EXISTING FEEDERS TO REMAIN
- EQUIPMENT AND FEEDERS TO BE DEMOLISHED. RETAIN EXISTING CONDUIT AND PATHWAYS TO EVERY EXTENT POSSIBLE FOR REUSE DURING RENOVATION NEW WORK.

DEMOLITION NOTES:

1. PULL EXISTING SECONDARY FEEDERS BACK TO EXISTING PULL BOX AFTER DE-ENERGIZED, AND COIL FOR RE-USE.

SYM	DESCRIPTION	DATE	APPR

NAVFAC

COMMONWEALTH OF VIRGINIA
JUSTIN C. CASHWELL
Lic. No.047237
5/4/16
PROFESSIONAL ENGINEER
SEAL

BURNS McDONNELL
1305 EXECUTIVE BLVD.
SUITE 160
CHESAPEAKE, VA 23320
A/E INFO.

APPROVED
David W. Grunfeld
FOR COMMANDER NAVFAC / B.L.T.L.

ACTIVITY
PER SAT-TO DOCUMENT FROM GERARD MONTANI (PM&BRANCH HEAD) WITH FEAD AT NAVAL STATION NEWPORT-NEWPORT, RI

SATISFACTORY TO DATE 4/20/16

DES JCC	DRW LAW	CHK KMS
PM / DM	MLW/LEJ	
BRANCH MANAGER		
CHIEF ENG/ARCH	DWG	
FIRE PROTECTION		

DEPARTMENT OF THE NAVY
NAVAL FACILITIES ENGINEERING COMMAND
NORTH IPT
NAVAL FACILITIES ENGINEERING COMMAND ~ MID-ATLANTIC
NAVAL STATION NEWPORT
NEWPORT, RHODE ISLAND
NEWPORT, RHODE ISLAND
RENOVATION OF NGIS, BUILDING 172
ELECTRICAL DEMOLITION - RISER DIAGRAM

SCALE: AS NOTED
EPROJECT NO. 13770079
CONSTR. CONTR. NO.
NAVFAC DRAWING NO. 12719545
SHEET 160 OF 200

ED601

DRAWFORM REVISION: 10 MAY 2014

FILE NAME: C:\Revit_Projects\86232-NGISBldg172\Models\MEP86232_E_jccashwell.rvt
REV/DATE: 5/2/2016 1:41:23 PM

GENERAL NOTES:

1. THIS SHEET SHALL READ IN CONJUNCTION WITH ALL OTHER CONTRACT DOCUMENTS.
2. DRAWINGS ARE BASED ON EXISTING BUILDING DOCUMENTS AND FIELD OBSERVATION. CONTRACTOR SHALL FIELD VERIFY EXISTING CONDITIONS PRIOR TO COMMENCMENT OF WORK.
3. SEE E-001 AND E-002 FOR ELECTRICAL LEGEND, ABBREVIATIONS AND GENERAL NOTES. SEE SHEET E-701 - E-704 FOR PANELBOARD SCHEDULES.

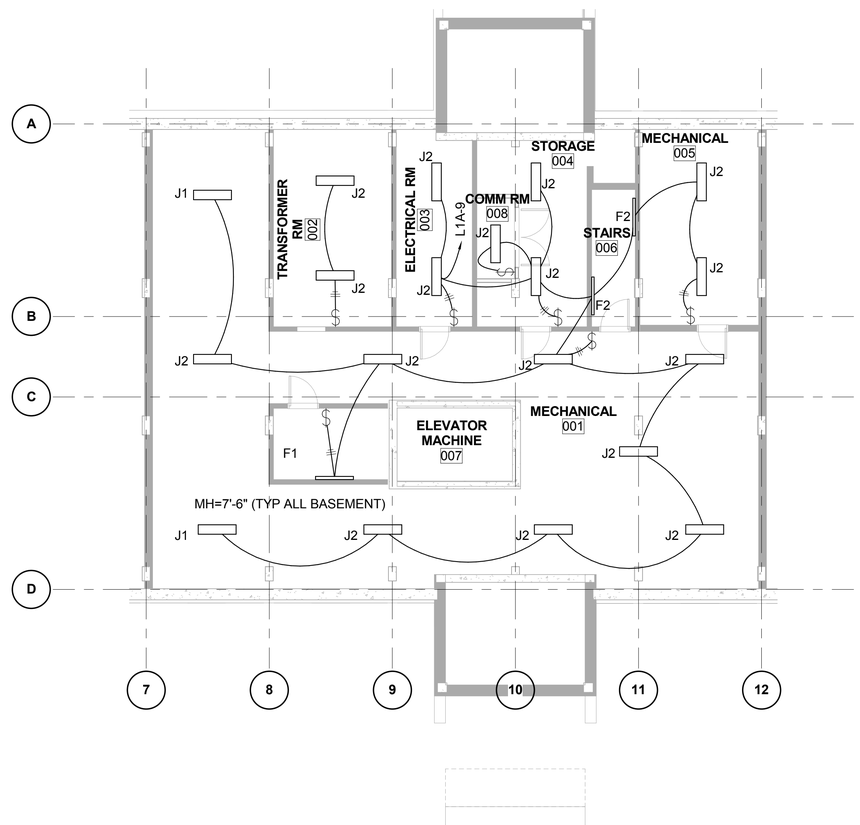

PLAN NORTH

ELECTRICAL NEW WORK PLAN - BASEMENT - LIGHTING

SCALE: 1/8" = 1'-0"

GRAPHIC SCALE:

1/8" =1'-0" 0' 4' 8' 16'

SYM	DESCRIPTION	DATE	APPR

NAVFAC

COMMONWEALTH OF VIRGINIA
JUSTIN C. CASHWELL
Lic. No.047237
5/4/16
PROFESSIONAL ENGINEER
SEAL

BURNS McDONNELL
1305 EXECUTIVE BLVD.
SUITE 160
CHESAPEAKE, VA 23320
A/E INFO

APPROVED
David W. Grunfeld
FOR COMMANDER NAVFAC / B.L.T.L.

ACTIVITY
PER SAT-TO DOCUMENT FROM GERARD MONTANI (PM&BRANCH HEAD) WITH FEAD AT NAVAL STATION NEWPORT, RI

SATISFACTORY TO DATE 4/20/16

DES	DRW	CHK
JCC	LAW	KMS

PM / DM MLW/LEJ
BRANCH MANAGER
CHIEF ENG/ARCH DWG
FIRE PROTECTION

DEPARTMENT OF THE NAVY
NAVAL FACILITIES ENGINEERING COMMAND
NAVAL FACILITIES ENGINEERING COMMAND ~ MID-ATLANTIC
NORTH IPT
NAVAL STATION NEWPORT
NEWPORT, RHODE ISLAND
NEWPORT, RHODE ISLAND

RENOVATION OF NGIS, BUILDING 172

ELECTRICAL NEW WORK PLAN - BASEMENT - LIGHTING

SCALE: AS NOTED
EPROJECT NO. 13770079
CONSTR. CONTR. NO.
NAVFAC DRAWING NO. 12719552
SHEET 167 OF 200
EL100

FILE NAME: C:\Revit_Projects\86232-NGISBldg172\Models\MEP\86232_E_jccashwell.rvt
REVDATE: 5/2/2016 1:41:24 PM

DRAWFORM REVISION: 10 MAY 2014

FIRST FLOOR LIGHTING MODULE SCHEDULE				
ROOM NUMBER	ROOM NAME	DETAIL NUMBER	SHEET NUMBER	LIGHTING CIRCUIT
100-3A	LIVING	4	E-403	L1A-9
100-3B	BEDROOM	4	E-403	L1A-9
100-3C-1	BATH-1	4	E-403	L1A-9
101-1A	LIVING	1	E-403	L1A-9
101-1B	BEDROOM	1	E-403	L1A-9
101-1C	BATH	1	E-403	L1A-9
102-1A	LIVING	1	E-403	L1A-9
102-1B	BEDROOM	1	E-403	L1A-9
102-1C	BATH	1	E-403	L1A-9
103-1A	LIVING	1	E-403	L1A-9
103-1B	BEDROOM	1	E-403	L1A-9
103-1C	BATH	1	E-403	L1A-9
104-1A	LIVING	1	E-403	L1A-9
104-1B	BEDROOM	1	E-403	L1A-9
104-1C	BATH	1	E-403	L1A-9
105-1A	LIVING	1	E-403	L1A-8
105A-1B	BEDROOM	1	E-403	L1A-8
105A-1C	BATH	1	E-403	L1A-8
106-1A	LIVING	3	E-403	L1A-8
106-1B	BEDROOM	3	E-403	L1A-8
106-1C	BATH	3	E-403	L1A-8
107-1A	LIVING	1	E-403	L1A-8
107-1B	BEDROOM	1	E-403	L1A-8
107-1C	BATH	1	E-403	L1A-8
108-1A	LIVING	1	E-403	L1A-8
108-1B	BEDROOM	1	E-403	L1A-8
108-1C	BATH	1	E-403	L1A-8
109-1A	LIVING	1	E-403	L1A-8
109-1B	BEDROOM	1	E-403	L1A-8
109-1C	BATH	1	E-403	L1A-8
110-1A	LIVING	1	E-403	L1A-8
110-1B	BEDROOM	1	E-403	L1A-8
110-1C	BATH	1	E-403	L1A-8
111-1B	BEDROOM	4	E-403	L1A-8
111-1C-1	BATH-1	4	E-403	L1A-8
111-3A	LIVING	4	E-403	L1A-8

GENERAL NOTES:

1. THIS SHEET SHALL READ IN CONJUNCTION WITH ALL OTHER CONTRACT DOCUMENTS.
2. DRAWINGS ARE BASED ON EXISTING BUILDING DOCUMENTS AND FIELD OBSERVATION. CONTRACTOR SHALL FIELD VERIFY EXISTING CONDITIONS PRIOR TO COMMENCMENT OF WORK.
3. SEE E-001 AND E-002 FOR ELECTRICAL LEGEND, ABBREVIATIONS AND GENERAL NOTES. SEE SHEET E-701 - E-704 FOR PANELBOARD SCHEDULES.
4. SEE E-002 FOR LIGHTING SEQUENCE OF OPERATIONS.
5. EXTERIOR LIGHTING FIXTURES CONTROLLED BY PHOTOCELL. SEE E-604 FOR PHOTOCELL CONTROL DIAGRAM.

LEGEND:

INDICATES TYPICAL ROOM LIGHTING LAYOUT. SEE LIGHTING MODULE SCHEDULE SHOWN ON THIS SHEET FOR MORE INFORMATION.

ROOM NUMBER NAMING:

100-3A-1

INDIVIDUAL ROOM DESIGNATION

TYPICAL MODULE NUMBER - SEE DETAIL INDICATED IN MODULE SCHEDULE (THIS SHEET) FOR LIGHT FIXTURE LAYOUT AND CIRCUITING INFORMATION.

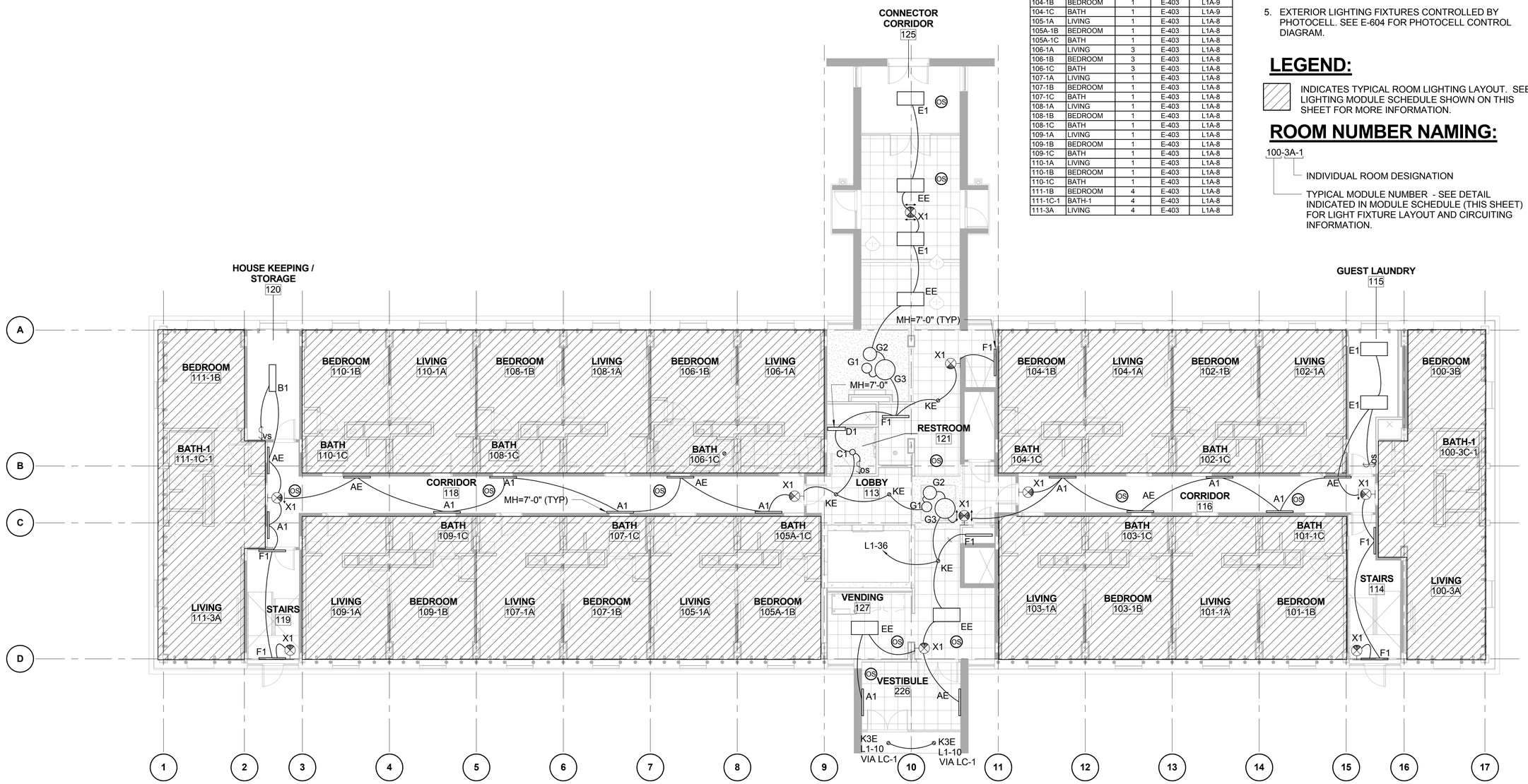

PLAN NORTH

ELECTRICAL NEW WORK PLAN - 1ST FLOOR - LIGHTING

SCALE: 1/8" = 1'-0"

GRAPHIC SCALE:

1/8" =1'-0" 0' 4' 8' 16'

NAVFAC

COMMONWEALTH OF VIRGINIA
JUSTIN C. CASHWELL
Lic. No.047237
5/4/16
PROFESSIONAL ENGINEER
SEAL

BURNS McDONNELL
1305 EXECUTIVE BLVD.
SUITE 160
CHESAPEAKE, VA 23320
A/E INFO

APPROVED
FOR COMMANDER NAVFAC / B.L.T.L.

ACTIVITY
PER SAT-TO DOCUMENT FROM GERARD MONTANI (PM/BRANCH HEAD) WITH FEAD AT NAVAL STATION NEWPORT-NEWPORT, RI

SATISFACTORY TO DATE 4/20/16

DES JCC	DRW LAW	CHK KMS
PM / DM	MLW/LEJ	
BRANCH MANAGER		
CHIEF ENG/ARCH	DWG	
FIRE PROTECTION		

DEPARTMENT OF THE NAVY
NAVAL FACILITIES ENGINEERING COMMAND
NORTH IPT
NAVAL FACILITIES ENGINEERING COMMAND - MID-ATLANTIC
NEWPORT, RHODE ISLAND
NAVAL STATION NEWPORT
NEWPORT, RHODE ISLAND
RENOVATION OF NGIS, BUILDING 172
ELECTRICAL NEW WORK PLAN - 1ST FLOOR - LIGHTING

SCALE: AS NOTED
EPROJECT NO. 13770079
CONSTR. CONTR. NO.
NAVFAC DRAWING NO. 12719553
SHEET 168 OF 200
EL101

DRAWFORM REVISION: 10 MAY 2014

FILE NAME: C:\Revit_Projects\86232-NGISBldg172\Models\MEP\86232_E_jccashwell.rvt
REVDATE: 5/2/2016 1:41:28 PM

SECOND FLOOR LIGHTING MODULE SCHEDULE				
ROOM NUMBER	ROOM NAME	DETAIL NUMBER	SHEET NUMBER	LIGHTING CIRCUIT
200-1C	BATH	4	E-403	L2-14
200-3A	LIVING	4	E-403	L2-14
200-3B	BEDROOM	4	E-403	L2-14
201-1A	LIVING	1	E-403	L2-14
201-1B	BEDROOM	1	E-403	L2-14
201-1C	BATH	1	E-403	L2-14
202-1A	LIVING	1	E-403	L2-14
202-1B	BEDROOM	1	E-403	L2-14
202-1C	BATH	1	E-403	L2-14
203-1A	LIVING	1	E-403	L2-14
203-1B	BEDROOM	1	E-403	L2-14
203-1C	BATH	1	E-403	L2-14
204-1A	LIVING	1	E-403	L2-14
204-1B	BEDROOM	1	E-403	L2-14
204-1C	BATH	1	E-403	L2-14
205-1A	LIVING	1	E-403	L2-13
205-1B	BEDROOM	1	E-403	L2-13
205-1C	BATH	1	E-403	L2-13
206-4A	BEDROOM	2	E-403	L2-13
206-4B	BATH	2	E-403	L2-13
207-1A	LIVING	1	E-403	L2-13
207-1B	BEDROOM	1	E-403	L2-13
207-1C	BATH	1	E-403	L2-13
208-1A	LIVING	1	E-403	L2-13
208-1B	BEDROOM	1	E-403	L2-13
208-1C	BATH	1	E-403	L2-13
209-1A	LIVING	1	E-403	L2-13
209-1B	BEDROOM	1	E-403	L2-13
209-1C	BATH	1	E-403	L2-13
210-1A	LIVING	1	E-403	L2-13
210-1B	BEDROOM	1	E-403	L2-13
210-1C	BATH	1	E-403	L2-13
211-1A	LIVING	4	E-403	L2-13
211-1B	BEDROOM	4	E-403	L2-13
211-1C	BATH	4	E-403	L2-13
212-1A	LIVING	1	E-403	L2-13
212-1B	BEDROOM	1	E-403	L2-13
212-1C	BATH	1	E-403	L2-13

GENERAL NOTES:

1. THIS SHEET SHALL READ IN CONJUNCTION WITH ALL OTHER CONTRACT DOCUMENTS.
2. DRAWINGS ARE BASED ON EXISTING BUILDING DOCUMENTS AND FIELD OBSERVATION. CONTRACTOR SHALL FIELD VERIFY EXISTING CONDITIONS PRIOR TO COMMENCMENT OF WORK.
3. SEE E-001 AND E-002 FOR ELECTRICAL LEGEND, ABBREVIATIONS AND GENERAL NOTES. SEE SHEET E-701 - E-704 FOR PANELBOARD SCHEDULES.
4. SEE E-002 FOR LIGHTING SEQUENCE OF OPERATIONS.
5. EXTERIOR LIGHTING FIXTURES CONTROLLED BY PHOTOCELL. SEE E-604 FOR PHOTOCELL CONTROL DIAGRAM.

LEGEND:

INDICATES TYPICAL ROOM LIGHTING LAYOUT. SEE LIGHTING MODULE SCHEDULE SHOWN ON THIS SHEET FOR MORE INFORMATION.

ROOM NUMBER NAMING:

100-3A-1

INDIVIDUAL ROOM DESIGNATION

TYPICAL MODULE NUMBER - SEE DETAIL INDICATED IN MODULE SCHEDULE (THIS SHEET) FOR LIGHT FIXTURE LAYOUT AND CIRCUITING INFORMATION.

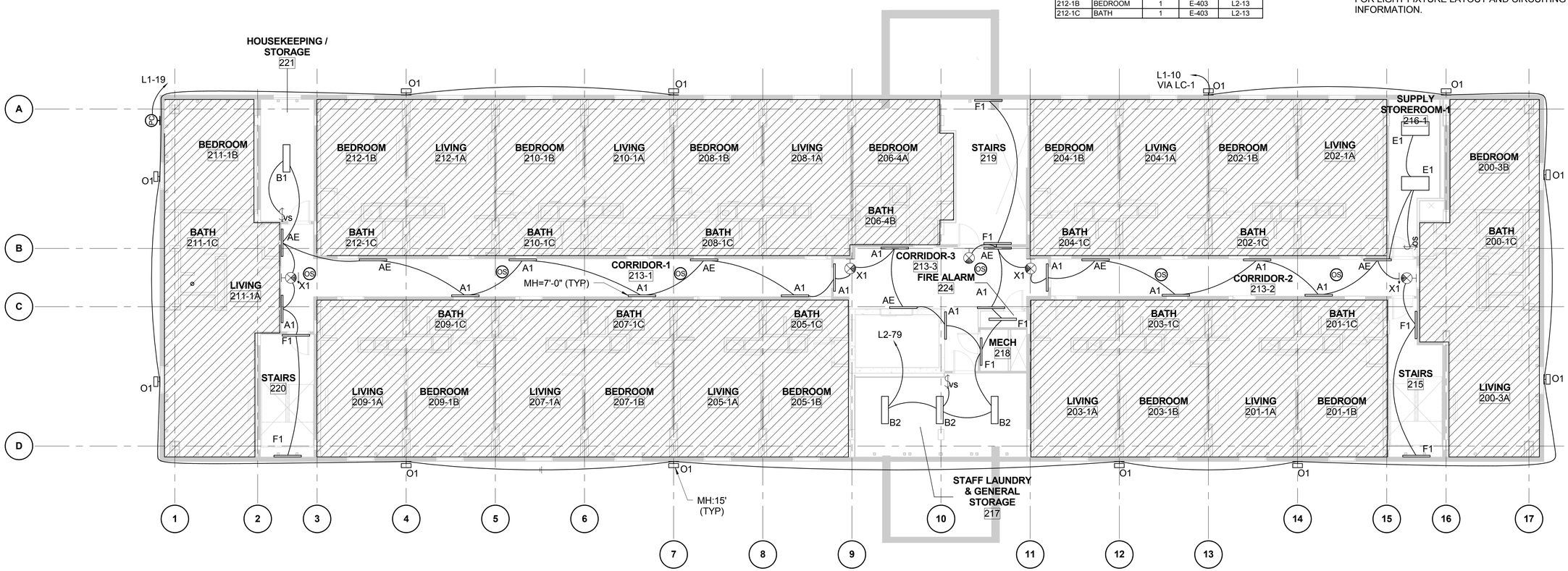

PLAN NORTH

ELECTRICAL NEW WORK PLAN - 2ND FLOOR - LIGHTING

SCALE: 1/8" = 1'-0"

GRAPHIC SCALE:

1/8" =1'-0" 0' 4' 8' 16'

SYM	DESCRIPTION	DATE	APPR

NAVFAC

COMMONWEALTH OF VIRGINIA
JUSTIN C. CASHWELL
Lic. No.047237
5/4/16
PROFESSIONAL ENGINEER
SEAL

BURNS McDONNELL
1305 EXECUTIVE BLVD.
SUITE 160
CHESAPEAKE, VA 23320
A/E INFO

APPROVED
FOR COMMANDER NAVFAC / B.L.T.L.

ACTIVITY
PER SAT-TO DOCUMENT FROM GERARD MONTANI (PM/BRANCH HEAD) WITH FEAD AT NAVAL STATION NEWPORT-NEWPORT, RI

SATISFACTORY TO DATE 4/20/16

DES JCC	DRW LAW	CHK KMS
PM / DM	MLW/LEJ	
BRANCH MANAGER		
CHIEF ENG/ARCH	DWG	
FIRE PROTECTION		

DEPARTMENT OF THE NAVY
NAVAL FACILITIES ENGINEERING COMMAND
NORTH IPT
NAVAL FACILITIES ENGINEERING COMMAND ~ MID-ATLANTIC
NAVAL STATION NEWPORT
NEWPORT, RHODE ISLAND

RENOVATION OF NGIS, BUILDING 172

ELECTRICAL NEW WORK PLAN - 2ND FLOOR - LIGHTING

SCALE: AS NOTED
EPROJECT NO. 13770079
CONSTR. CONTR. NO.
NAVFAC DRAWING NO. 12719554
SHEET 169 OF 200
EL102

DRAWFORM REVISION: 10 MAY 2014

FILE NAME: C:\Revit_Projects\86232-NGISBldg172\Models\MEP\86232_E_jccashwell.rvt
REVDATE: 5/2/2016 1:41:31 PM

THIRD FLOOR LIGHTING MODULE SCHEDULE				
ROOM NUMBER	ROOM NAME	DETAIL NUMBER	SHEET NUMBER	LIGHTING CIRCUIT
300-3A	LIVING	4	E-403	L3-26
300-3B	BEDROOM	4	E-403	L3-26
300-3C-1	BATH-1	4	E-403	L3-26
301-1A	LIVING	1	E-403	L3-26
301-1B	BEDROOM	1	E-403	L3-26
301-1C	BATH	1	E-403	L3-26
302-1A	LIVING	1	E-403	L3-26
302-1B	BEDROOM	1	E-403	L3-26
302-1C	BATH	1	E-403	L3-26
303-1A	LIVING	1	E-403	L3-26
303-1B	BEDROOM	1	E-403	L3-26
303-1C	BATH	1	E-403	L3-26
304-1A	LIVING	1	E-403	L3-26
304-1B	BEDROOM	1	E-403	L3-26
304-1C	BATH	1	E-403	L3-26
305-1A	LIVING	1	E-403	L3-25
305-1B	BEDROOM	1	E-403	L3-25
305-1C	BATH	1	E-403	L3-25
306-4A	BEDROOM	2	E-403	L3-25
306-4B	BATH	2	E-403	L3-25
307-1A	LIVING	1	E-403	L3-25
307-1B	BEDROOM	1	E-403	L3-25
307-1C	BATH	1	E-403	L3-25
308-1A	LIVING	1	E-403	L3-25
308-1B	BEDROOM	1	E-403	L3-25
308-1C	BATH	1	E-403	L3-25
309-1A	LIVING	1	E-403	L3-25
309-1B	BEDROOM	1	E-403	L3-25
309-1C	BATH	1	E-403	L3-25
310-1A	LIVING	1	E-403	L3-25
310-1B	BEDROOM	1	E-403	L3-25
310-1C	BATH	1	E-403	L3-25
311-1A	LIVING	4	E-403	L3-25
311-1C	BATH	4	E-403	L3-25
312-1A	LIVING	1	E-403	L3-25
312-1B	BEDROOM	1	E-403	L3-25
312-1C	BATH	1	E-403	L3-25

GENERAL NOTES:

1. THIS SHEET SHALL READ IN CONJUNCTION WITH ALL OTHER CONTRACT DOCUMENTS.
2. DRAWINGS ARE BASED ON EXISTING BUILDING DOCUMENTS AND FIELD OBSERVATION. CONTRACTOR SHALL FIELD VERIFY EXISTING CONDITIONS PRIOR TO COMMENCMENT OF WORK.
3. SEE E-001 AND E-002 FOR ELECTRICAL LEGEND, ABBREVIATIONS AND GENERAL NOTES. SEE SHEET E-701 - E-704 FOR PANELBOARD SCHEDULES.
4. SEE E-002 FOR LIGHTING SEQUENCE OF OPERATIONS.

LEGEND:

INDICATES TYPICAL ROOM LIGHTING LAYOUT. SEE LIGHTING MODULE SCHEDULE SHOWN ON THIS SHEET FOR MORE INFORMATION.

ROOM NUMBER NAMING:

100-3A-1

INDIVIDUAL ROOM DESIGNATION

TYPICAL MODULE NUMBER - SEE DETAIL INDICATED IN MODULE SCHEDULE (THIS SHEET) FOR LIGHT FIXTURE LAYOUT AND CIRCUITING INFORMATION.

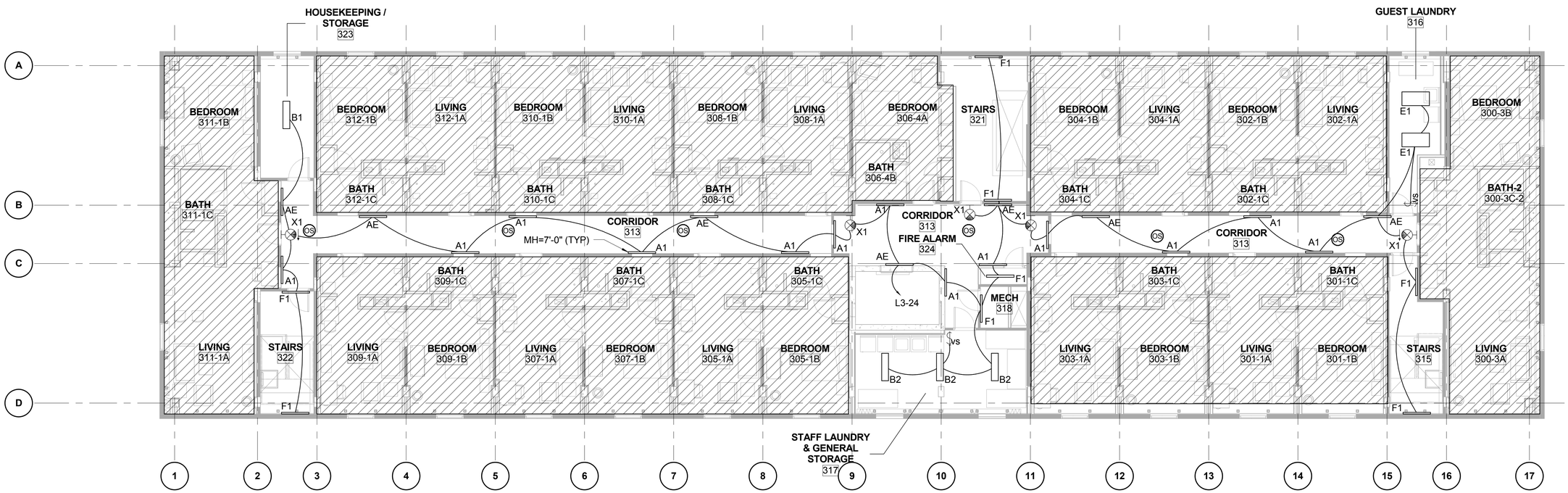

ELECTRICAL NEW WORK PLAN - 3RD FLOOR - LIGHTING

SCALE: 1/8" = 1'-0"

GRAPHIC SCALE:

1/8" =1'-0" 0' 4' 8' 16'

NAVFAC

COMMONWEALTH OF VIRGINIA
JUSTIN C. CASHWELL
Lic. No.047237
5/23/16
PROFESSIONAL ENGINEER

BURNS McDONNELL
1305 EXECUTIVE BLVD.
SUITE 160
CHESAPEAKE, VA 23320

A/E INFO.

APPROVED
David W. Grunfeld
FOR COMMANDER NAVFAC / B.L.T.L.

ACTIVITY
PER SAT-TO DOCUMENT FROM GERARD MONTANI (PM&BRANCH HEAD) WITH FEAD AT NAVAL STATION NEWPORT,NEWPORT, RI

SATISFACTORY TO DATE 4/20/16

DES JCC | DRW LAW | CHK KMS
PM / DM MLW/LEJ
BRANCH MANAGER
CHIEF ENG/ARCH DWG
FIRE PROTECTION

DEPARTMENT OF THE NAVY
NAVAL FACILITIES ENGINEERING COMMAND
NORTH IPT
NAVAL FACILITIES ENGINEERING COMMAND ~ MID-ATLANTIC
NEWPORT, RHODE ISLAND
NAVAL STATION NEWPORT
NEWPORT, RHODE ISLAND
RENOVATION OF NGIS, BUILDING 172
ELECTRICAL NEW WORK PLAN - 3RD FLOOR - LIGHTING

SCALE: AS NOTED
EPROJECT NO. 13770079
CONSTR. CONTR. NO.
NAVFAC DRAWING NO. 12719555
SHEET 170 OF 200
EL103

DRAWFORM REVISION: 10 MAY 2014

FILE NAME: C:\Revit_Projects\86232-NGISBldg172\Models\MEP\86232_E_jccashwell.rvt
REVDATE: 5/23/2016 3:23:00 PM

FIRST FLOOR LIGHTING MODULE SCHEDULE				
ROOM NUMBER	ROOM NAME	DETAIL NUMBER	SHEET NUMBER	LIGHTING CIRCUIT
100-3A	LIVING	4	E-403	L1A-9
100-3B	BEDROOM	4	E-403	L1A-9
100-3C-1	BATH-1	4	E-403	L1A-9
101-1A	LIVING	1	E-403	L1A-9
101-1B	BEDROOM	1	E-403	L1A-9
101-1C	BATH	1	E-403	L1A-9
102-1A	LIVING	1	E-403	L1A-9
102-1B	BEDROOM	1	E-403	L1A-9
102-1C	BATH	1	E-403	L1A-9
103-1A	LIVING	1	E-403	L1A-9
103-1B	BEDROOM	1	E-403	L1A-9
103-1C	BATH	1	E-403	L1A-9
104-1A	LIVING	1	E-403	L1A-9
104-1B	BEDROOM	1	E-403	L1A-9
104-1C	BATH	1	E-403	L1A-9
105-1A	LIVING	1	E-403	L1A-8
105A-1B	BEDROOM	1	E-403	L1A-8
105A-1C	BATH	1	E-403	L1A-8
106-1A	LIVING	3	E-403	L1A-8
106-1B	BEDROOM	3	E-403	L1A-8
106-1C	BATH	3	E-403	L1A-8
107-1A	LIVING	1	E-403	L1A-8
107-1B	BEDROOM	1	E-403	L1A-8
107-1C	BATH	1	E-403	L1A-8
108-1A	LIVING	1	E-403	L1A-8
108-1B	BEDROOM	1	E-403	L1A-8
108-1C	BATH	1	E-403	L1A-8
109-1A	LIVING	1	E-403	L1A-8
109-1B	BEDROOM	1	E-403	L1A-8
109-1C	BATH	1	E-403	L1A-8
110-1A	LIVING	1	E-403	L1A-8
110-1B	BEDROOM	1	E-403	L1A-8
110-1C	BATH	1	E-403	L1A-8
111-1B	BEDROOM	4	E-403	L1A-8
111-1C-1	BATH-1	4	E-403	L1A-8
111-3A	LIVING	4	E-403	L1A-8

GENERAL NOTES:

1. THIS SHEET SHALL READ IN CONJUNCTION WITH ALL OTHER CONTRACT DOCUMENTS.
2. DRAWINGS ARE BASED ON EXISTING BUILDING DOCUMENTS AND FIELD OBSERVATION. CONTRACTOR SHALL FIELD VERIFY EXISTING CONDITIONS PRIOR TO COMMENCMENT OF WORK.
3. SEE E-001 AND E-002 FOR ELECTRICAL LEGEND, ABBREVIATIONS AND GENERAL NOTES. SEE SHEET E-701 - E-704 FOR PANELBOARD SCHEDULES.
4. SEE E-002 FOR LIGHTING SEQUENCE OF OPERATIONS.

LEGEND:

INDICATES TYPICAL ROOM LIGHTING LAYOUT. SEE LIGHTING MODULE SCHEDULE SHOWN ON THIS SHEET FOR MORE INFORMATION.

ROOM NUMBER NAMING:

100-3A-1

INDIVIDUAL ROOM DESIGNATION

TYPICAL MODULE NUMBER - SEE DETAIL INDICATED IN MODULE SCHEDULE (THIS SHEET) FOR LIGHT FIXTURE LAYOUT AND CIRCUITING INFORMATION.

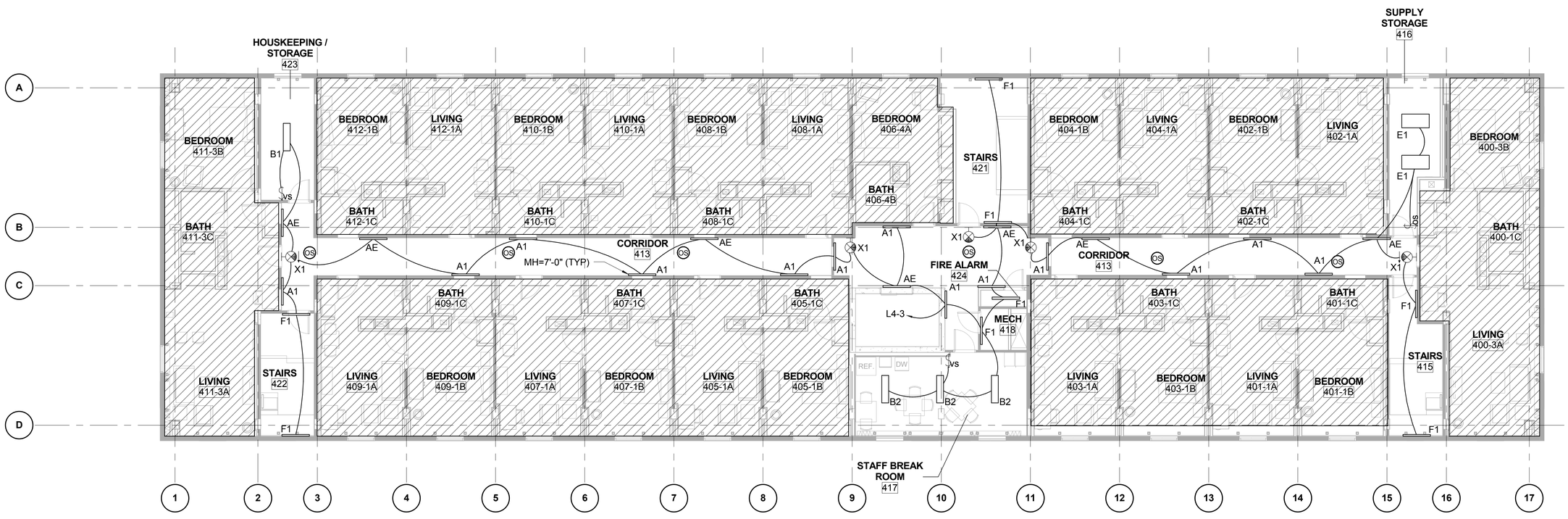

PLAN NORTH

ELECTRICAL NEW WORK PLAN - 4TH FLOOR - LIGHTING

SCALE: 1/8" = 1'-0"

GRAPHIC SCALE:

1/8" =1'-0" 0' 4' 8' 16'

SYM	DESCRIPTION	DATE	APPR

NAVFAC

COMMONWEALTH OF VIRGINIA
JUSTIN C. CASHWELL
Lic. No.047237
5/23/16
PROFESSIONAL ENGINEER

BURNS McDONNELL
1305 EXECUTIVE BLVD.
SUITE 160
CHESAPEAKE, VA 23320

A/E INFO.

APPROVED
David W. Grunfeld
FOR COMMANDER NAVFAC / B.L.T.L.

ACTIVITY
PER SAT-TO DOCUMENT FROM GERARD MONTANI (PM&BRANCH HEAD) WITH FEAD AT NAVAL STATION NEWPORT-NEWPORT, RI

SATISFACTORY TO DATE 4/20/16

DES JCC | DRW LAW | CHK KMS
PM / DM MLW/LEJ
BRANCH MANAGER
CHIEF ENG/ARCH DWG
FIRE PROTECTION

DEPARTMENT OF THE NAVY
NAVAL FACILITIES ENGINEERING COMMAND
NORTH IPT
NAVAL FACILITIES ENGINEERING COMMAND ~ MID-ATLANTIC
NEWPORT, RHODE ISLAND
NAVAL STATION NEWPORT
NEWPORT, RHODE ISLAND
RENOVATION OF NGIS, BUILDING 172
ELECTRICAL NEW WORK PLAN - 4TH FLOOR - LIGHTING

SCALE: AS NOTED
EPROJECT NO. 13770079
CONSTR. CONTR. NO.
NAVFAC DRAWING NO. 12719556
SHEET 171 OF 200
EL104

DRAWFORM REVISION: 10 MAY 2014

FILE NAME: C:\Revit_Projects\86232-NGISBldg172\Models\MEP\86232_E_jccashwell.rvt
REVDATE: 5/23/2016 3:23:01 PM

GENERAL NOTES:

1. THIS SHEET SHALL READ IN CONJUNCTION WITH ALL OTHER CONTRACT DOCUMENTS.
2. DRAWINGS ARE BASED ON EXISTING BUILDING DOCUMENTS AND FIELD OBSERVATION. CONTRACTOR SHALL FIELD VERIFY EXISTING CONDITIONS PRIOR TO COMMENCMENT OF WORK.
3. SEE E-001 AND E-002 FOR ELECTRICAL LEGEND, ABBREVIATIONS AND GENERAL NOTES. SEE SHEET E-701 - E-704 FOR PANELBOARD SCHEDULES.

NEW WORK NOTES:

1. MODIFY EXISTING 2'X2'X2' PULL BOX IN ORDER TO ALLOW ACCESS TO EAST SIDE OF BOX AS INDICATED ON DRAWING TO ALLOW FOR RE-ROUTING OF EXISTING SECONDARY FEEDERS TO NEW MAIN SWITCHBOARD (MSBD).
2. ELEVATOR EQUIPMENT IN ELEVATOR MACHINE ROOM IS ALL EXISTING TO REMAIN, INCLUDING SHUNT TRIP BREAKER, PIT LIGHTING, ETC. CONTRACTOR TO REUSE EXISTING CIRCUITING AND PATHWAYS WHEREVER FEASIBLE. CIRCUITS SHALL BE EXTENDED TO PANEL AC-1A, UON.
3. SHUNT TRIP BREAKER IS EXISTING TO REMAIN. THE

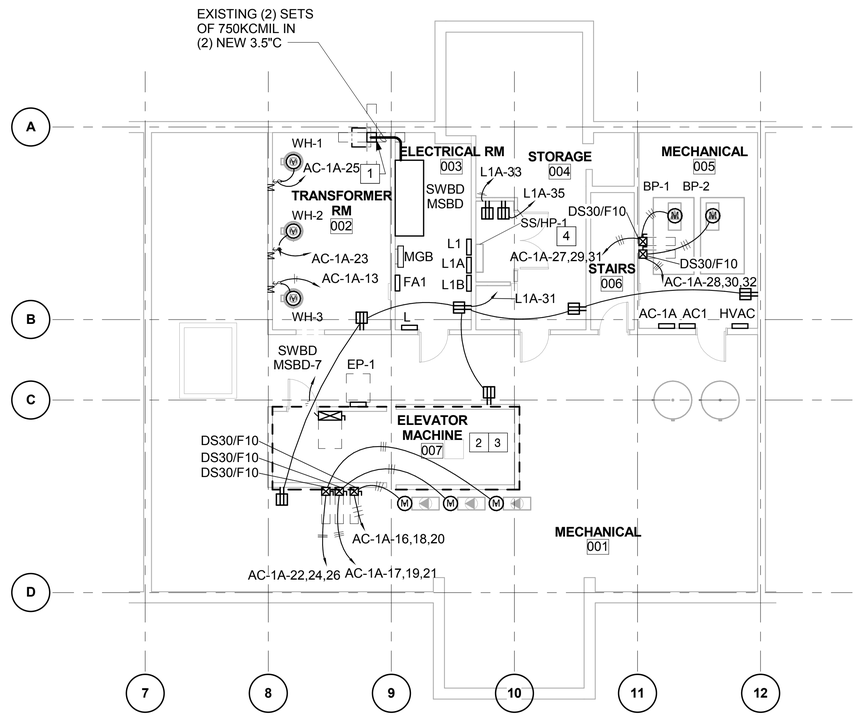

PLAN NORTH

ELECTRICAL NEW WORK PLAN - BASEMENT - POWER

SCALE: 1/8" = 1'-0"

GRAPHIC SCALE:

1/8" =1'-0" 0' 4' 8' 16'

NAVFAC

COMMONWEALTH OF VIRGINIA
JUSTIN C. CASHWELL
Lic. No.047237
5/4/16
PROFESSIONAL ENGINEER
SEAL

BURNS McDONNELL
1305 EXECUTIVE BLVD.
SUITE 160
CHESAPEAKE, VA 23320
A/E INFO.

APPROVED
David W. Grunfeld
FOR COMMANDER NAVFAC / B.L.T.L.

ACTIVITY
PER SAT-TO DOCUMENT FROM GERARD MONTANI (PM&BRANCH HEAD) WITH FEAD AT NAVAL STATION NEWPORT-NEWPORT, RI

SATISFACTORY TO DATE 4/20/16

DES	JCC	DRW	LAW	CHK	KMS

PM / DM MLW/LEJ
BRANCH MANAGER
CHIEF ENG/ARCH DWG
FIRE PROTECTION

DEPARTMENT OF THE NAVY
NAVAL FACILITIES ENGINEERING COMMAND
NORTH IPT
NAVAL FACILITIES ENGINEERING COMMAND ~ MID-ATLANTIC
NAVAL STATION NEWPORT
NEWPORT, RHODE ISLAND
NEWPORT, RHODE ISLAND

RENOVATION OF NGIS, BUILDING 172

ELECTRICAL NEW WORK PLAN - BASEMENT - POWER

SCALE: AS NOTED
EPROJECT NO. 13770079
CONSTR. CONTR. NO.
NAVFAC DRAWING NO. 12719546
SHEET 161 OF 200

EP100

DRAWFORM REVISION: 10 MAY 2014

FILE NAME: C:\Revit_Projects\86232-NGISBldg172\Models\MEP\86232_E_jccashwell.rvt
REVDATE: 5/2/2016 1:41:39 PM

FIRST FLOOR CIRCUITING SCHEDULE

ROOM NUMBER	ROOM NAME	CIRCUIT ID	DESCRIPTION	PANEL	CIRCUIT NUMBER
100-3A	LIVING	M3-LV-CIRC-A	SINK RECEPTACLE	L1A	15
100-3A	LIVING	M3-LV-CIRC-B	MICROWAVE/REFRIGERATOR	L1A	20
100-3A	LIVING	M3-LV-CIRC-E	ROOM AC UNIT	L	12,14
100-3A	LIVING	M3-LV-CIRC-D	LIVING ROOM GENERAL RECPTACLES	L1A	18
100-3A	LIVING	M3-LV-CIRC-C	COFFEE MAKER	L1A	13
100-3B	BEDROOM	M3-BD-CIRC-A	BEDROOM GENERAL RECEPTACLES	L1A	17
100-3B	BEDROOM	M3-BD-CIRC-B	ROOM AC UNIT	L	15,17
100-3C-1	BATH-1	M3-BT-CIRC-A	BATH RECEPTACLE	L1A	22
101-1A	LIVING	M1-LV-CIRC-D	SINK RECEPTACLE	L1A	14
101-1A	LIVING	M1-LV-CIRC-A	LIVING ROOM GENERAL RECPTACLES	L1A	12
101-1A	LIVING	M1-LV-CIRC-B	MICROWAVE/REFRIGERATOR	L1A	7
101-1A	LIVING	M1-LV-CIRC-C	ROOM AC UNIT	AC1	40,42
101-1B	BEDROOM	M1-BD-CIRC-A	BEDROOM GENERAL RECEPTACLES	L1A	11
101-1B	BEDROOM	M1-LV-CIRC-C	ROOM AC UNIT	AC1	40,42
101-1C	BATH	M1-BT-CIRC-A	BATH RECEPTACLE	L1A	16
102-1A	LIVING	M1-LV-CIRC-D	SINK RECEPTACLE	L1A	26
102-1A	LIVING	M1-LV-CIRC-A	LIVING ROOM GENERAL RECPTACLES	L1A	19
102-1A	LIVING	M1-LV-CIRC-B	MICROWAVE/REFRIGERATOR	L1A	24
102-1A	LIVING	M1-LV-CIRC-C	ROOM AC UNIT	AC1	2,4
102-1B	BEDROOM	M1-BD-CIRC-A	BEDROOM GENERAL RECEPTACLES	L1A	21
102-1B	BEDROOM	M1-LV-CIRC-C	ROOM AC UNIT	AC1	2,4
102-1C	BATH	M1-BT-CIRC-A	BATH RECEPTACLE	L1B	11
103-1A	LIVING	M1-LV-CIRC-D	SINK RECEPTACLE	L1A	8
103-1A	LIVING	M1-LV-CIRC-A	LIVING ROOM GENERAL RECPTACLES	L1A	3
103-1A	LIVING	M1-LV-CIRC-B	MICROWAVE/REFRIGERATOR	L1	28
103-1A	LIVING	M1-LV-CIRC-C	ROOM AC UNIT	AC1	36,38
103-1B	BEDROOM	M1-BD-CIRC-A	BEDROOM GENERAL RECEPTACLES	L1A	10
103-1B	BEDROOM	M1-LV-CIRC-C	ROOM AC UNIT	AC1	36,38
103-1C	BATH	M1-BT-CIRC-A	BATH RECEPTACLE	L1A	5
104-1A	LIVING	M1-LV-CIRC-D	SINK RECEPTACLE	L1A	30
104-1A	LIVING	M1-LV-CIRC-A	LIVING ROOM GENERAL RECPTACLES	L1A	23
104-1A	LIVING	M1-LV-CIRC-B	MICROWAVE/REFRIGERATOR	L1A	28
104-1A	LIVING	M1-LV-CIRC-C	ROOM AC UNIT	AC1	5,7
104-1B	BEDROOM	M1-BD-CIRC-A	BEDROOM GENERAL RECEPTACLES	L1A	32
104-1B	BEDROOM	M1-LV-CIRC-C	ROOM AC UNIT	AC1	5,7
104-1C	BATH	M1-BT-CIRC-A	BATH RECEPTACLE	L1A	25
105-1A	LIVING	M1-LV-CIRC-D	SINK RECEPTACLE	L1	41
105-1A	LIVING	M1-LV-CIRC-A	LIVING ROOM GENERAL RECPTACLES	L1	40
105-1A	LIVING	M1-LV-CIRC-B	MICROWAVE/REFRIGERATOR	L1	39
105-1A	LIVING	M1-LV-CIRC-C	ROOM AC UNIT	AC1	17,19
105A-1B	BEDROOM	M1-BD-CIRC-A	BEDROOM GENERAL RECEPTACLES	L1A	6

FIRST FLOOR CIRCUITING SCHEDULE

ROOM NUMBER	ROOM NAME	CIRCUIT ID	DESCRIPTION	PANEL	CIRCUIT NUMBER
105A-1B	BEDROOM	M1-LV-CIRC-C	ROOM AC UNIT	AC1	17,19
105A-1C	BATH	M1-BT-CIRC-A	BATH RECEPTACLE	L1A	2
106-1A	LIVING	M1-LV-CIRC-D	SINK RECEPTACLE	L1A	29
106-1A	LIVING	M1-LV-CIRC-A	LIVING ROOM GENERAL RECPTACLES	L1A	34
106-1A	LIVING	M1-LV-CIRC-B	MICROWAVE/REFRIGERATOR	L1A	27
106-1A	LIVING	M1-LV-CIRC-C	ROOM AC UNIT	AC1	18,20
106-1B	BEDROOM	M1-BD-CIRC-A	BEDROOM GENERAL RECEPTACLES	L1B	12
106-1B	BEDROOM	M1-LV-CIRC-C	ROOM AC UNIT	AC1	18,20
106-1C	BATH	M1-BT-CIRC-A	BATH RECEPTACLE	L1A	36
107-1A	LIVING	M1-LV-CIRC-D	SINK RECEPTACLE	L1	30
107-1A	LIVING	M1-LV-CIRC-A	LIVING ROOM GENERAL RECPTACLES	L1	32
107-1A	LIVING	M1-LV-CIRC-B	MICROWAVE/REFRIGERATOR	L1	33
107-1A	LIVING	M1-LV-CIRC-C	ROOM AC UNIT	AC1	6,8
107-1B	BEDROOM	M1-BD-CIRC-A	BEDROOM GENERAL RECEPTACLES	L1	37
107-1B	BEDROOM	M1-LV-CIRC-C	ROOM AC UNIT	AC1	6,8
107-1C	BATH	M1-BT-CIRC-A	BATH RECEPTACLE	L1	35
108-1A	LIVING	M1-LV-CIRC-D	SINK RECEPTACLE	L1B	3
108-1A	LIVING	M1-LV-CIRC-A	LIVING ROOM GENERAL RECPTACLES	L1B	2
108-1A	LIVING	M1-LV-CIRC-B	MICROWAVE/REFRIGERATOR	L1B	1
108-1A	LIVING	M1-LV-CIRC-C	ROOM AC UNIT	AC1	13,15
108-1B	BEDROOM	M1-BD-CIRC-A	BEDROOM GENERAL RECEPTACLES	L1B	5
108-1B	BEDROOM	M1-LV-CIRC-C	ROOM AC UNIT	AC1	13,15
108-1C	BATH	M1-BT-CIRC-A	BATH RECEPTACLE	L1B	4
109-1A	LIVING	M1-LV-CIRC-D	SINK RECEPTACLE	L1	22
109-1A	LIVING	M1-LV-CIRC-A	LIVING ROOM GENERAL RECPTACLES	L1	20
109-1A	LIVING	M1-LV-CIRC-B	MICROWAVE/REFRIGERATOR	L1	18
109-1A	LIVING	M1-LV-CIRC-C	ROOM AC UNIT	AC1	9,11
109-1B	BEDROOM	M1-BD-CIRC-A	BEDROOM GENERAL RECEPTACLES	L1	24
109-1B	BEDROOM	M1-LV-CIRC-C	ROOM AC UNIT	AC1	9,11
109-1C	BATH	M1-BT-CIRC-A	BATH RECEPTACLE	L1	26
110-1A	LIVING	M1-LV-CIRC-D	SINK RECEPTACLE	L1B	8
110-1A	LIVING	M1-LV-CIRC-A	LIVING ROOM GENERAL RECPTACLES	L1B	7
110-1A	LIVING	M1-LV-CIRC-B	MICROWAVE/REFRIGERATOR	L1B	6
110-1A	LIVING	M1-LV-CIRC-C	ROOM AC UNIT	AC1	14,16
110-1B	BEDROOM	M1-BD-CIRC-A	BEDROOM GENERAL RECEPTACLES	L1B	10
110-1B	BEDROOM	M1-LV-CIRC-C	ROOM AC UNIT	AC1	14,16
110-1C	BATH	M1-BT-CIRC-A	BATH RECEPTACLE	L1B	9
111-1B	BEDROOM	M3-BD-CIRC-A	BEDROOM GENERAL RECEPTACLES	L1	11
111-1B	BEDROOM	M3-BD-CIRC-B	ROOM AC UNIT	HVAC	40,42
111-1C-1	BATH-1	M3-BT-CIRC-A	BATH RECEPTACLE	L1	13
111-3A	LIVING	M3-LV-CIRC-A	SINK RECEPTACLE	L1	14

FIRST FLOOR CIRCUITING SCHEDULE

ROOM NUMBER	ROOM NAME	CIRCUIT ID	DESCRIPTION	PANEL	CIRCUIT NUMBER
111-3A	LIVING	M3-LV-CIRC-B	MICROWAVE/REFRIGERATOR	L1	14
111-3A	LIVING	M3-LV-CIRC-E	ROOM AC UNIT	HVAC	37,39
111-3A	LIVING	M3-LV-CIRC-D	LIVING ROOM GENERAL RECPTACLES	L1	16
111-3A	LIVING	M3-LV-CIRC-C	COFFEE MAKER	L1	15

GENERAL NOTES:

1. THIS SHEET SHALL READ IN CONJUNCTION WITH ALL OTHER CONTRACT DOCUMENTS.
2. DRAWINGS ARE BASED ON EXISTING BUILDING DOCUMENTS AND FIELD OBSERVATION. CONTRACTOR SHALL FIELD VERIFY EXISTING CONDITIONS PRIOR TO COMMENCMENT OF WORK.
3. SEE E-001 AND E-002 FOR ELECTRICAL LEGEND, ABBREVIATIONS AND GENERAL NOTES. SEE SHEET E-701 - E-704 FOR PANELBOARD SCHEDULES.

NEW WORK NOTES:

1. SEE "ENLARGED PLAN TYPICAL SUITE 1ST FLOOR - POWER & TELECOM" SHEET E-401 FOR MORE DETAIL.
2. SEE "ENLARGED PLAN - TYPICAL 1ST FLOOR EXEC SUITE - POWER & TELECOM" SHEET E-401 FOR MORE DETAIL.
3. SEE "BASEMENT POWER PLAN", SHEET EP100 FOR INDOOR COMPONENT OF SSHP-1. INTERCONNECTION TO BE FIELD WIRED BY ELECTRICAL CONTRACTOR.

LEGEND:

INDICATES TYPICAL ROOM POWER AND COMMUNICATIONS LAYOUT. SEE TYPICAL CIRCUITING SCHEDULE SHOWN ON THIS SHEET FOR MORE INFORMATION.

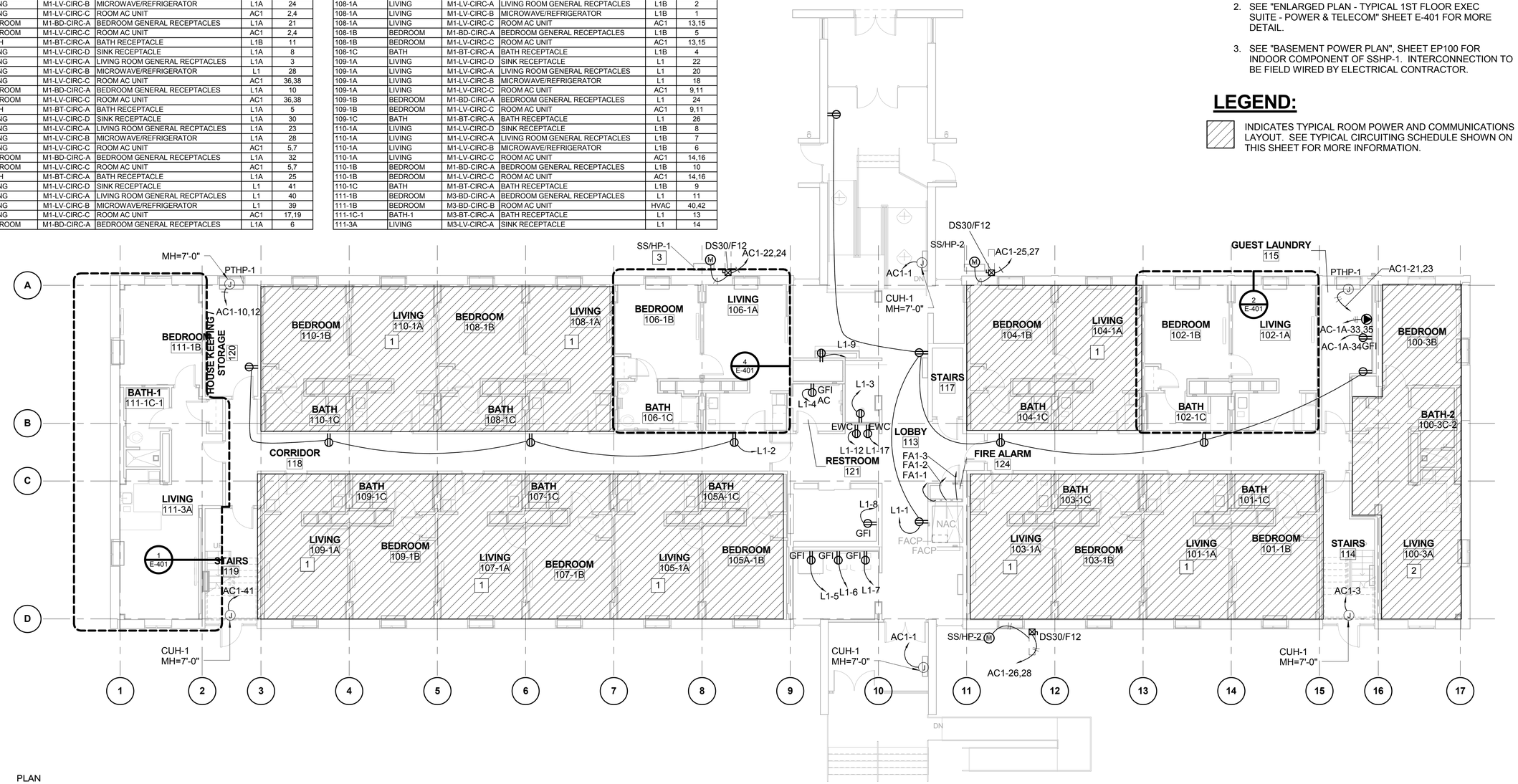

PLAN NORTH

ELECTRICAL NEW WORK PLAN - 1ST FLOOR - POWER

SCALE: 1/8" = 1'-0"

GRAPHIC SCALE:

1/8" =1'-0" 0' 4' 8' 16'

NAVFAC

COMMONWEALTH OF VIRGINIA
JUSTIN C. CASHWELL
Lic. No.047237
5/4/16
PROFESSIONAL ENGINEER
SEAL

BURNS McDONNELL
1305 EXECUTIVE BLVD.
SUITE 160
CHESAPEAKE, VA 23320
A/E INFO

APPROVED
David W. Grunfeld
FOR COMMANDER NAVFAC / B.L.T.L.

ACTIVITY
PER SAT-TO DOCUMENT FROM GERARD MONTANI (P&B/BRANCH HEAD) WITH FEAD AT NAVAL STATION NEWPORT-NEWPORT, RI

SATISFACTORY TO DATE 4/20/16

DES JCC	DRW LAW	CHK KMS
PM / DM	MLW/LEJ	
BRANCH MANAGER		
CHIEF ENG/ARCH	DWG	
FIRE PROTECTION		

DEPARTMENT OF THE NAVY
NAVAL FACILITIES ENGINEERING COMMAND
NORTH IPT
NAVAL FACILITIES ENGINEERING COMMAND ~ MID-ATLANTIC
NAVAL STATION NEWPORT
NEWPORT, RHODE ISLAND
RENOVATION OF NGIS, BUILDING 172
ELECTRICAL NEW WORK PLAN - 1ST FLOOR - POWER

SCALE: AS NOTED
EPROJECT NO. 13770079
CONSTR. CONTR. NO.
NAVFAC DRAWING NO. 12719547
SHEET 162 OF 200
EP101

DRAWFORM REVISION: 10 MAY 2014

FILE NAME: C:\Revit_Projects\86232-NGISBldg172\Models\MEP\86232_E_jccashwell.rvt
REVDATE: 5/2/2016 1:41:42 PM

SECOND FLOOR CIRCUITING SCHEDULE

ROOM NUMBER	ROOM NAME	CIRCUIT ID	DESCRIPTION	PANEL	CIRCUIT NUMBER
200-1C	BATH	M3-BT-CIRC-A	BATH RECEPTACLE	L2	3
200-3A	LIVING	M3-LV-CIRC-A	SINK RECEPTACLE	L2	10
200-3A	LIVING	M3-LV-CIRC-B	MICROWAVE/REFRIGERATOR	L2	5
200-3A	LIVING	M3-LV-CIRC-E	ROOM AC UNIT	HVAC	24,26
200-3A	LIVING	M3-LV-CIRC-D	LIVING ROOM GENERAL RECPTACLES	L2	4
200-3A	LIVING	M3-LV-CIRC-C	COFFEE MAKER	L2	11
200-3B	BEDROOM	M3-BD-CIRC-A	BEDROOM GENERAL RECEPTACLES	L2	1
200-3B	BEDROOM	M3-BD-CIRC-B	ROOM AC UNIT	HVAC	17,19
201-1A	LIVING	M1-LV-CIRC-D	SINK RECEPTACLE	L2	26
201-1A	LIVING	M1-LV-CIRC-A	LIVING ROOM GENERAL RECPTACLES	L2	27
201-1A	LIVING	M1-LV-CIRC-B	MICROWAVE/REFRIGERATOR	L2	28
201-1A	LIVING	M1-LV-CIRC-C	ROOM AC UNIT	AC2	9,11
201-1B	BEDROOM	M1-BD-CIRC-A	BEDROOM GENERAL RECEPTACLES	L2	25
201-1B	BEDROOM	M1-LV-CIRC-C	ROOM AC UNIT	AC2	9,11
201-1C	BATH	M1-BT-CIRC-A	BATH RECEPTACLE	L2	7
202-1A	LIVING	M1-LV-CIRC-D	SINK RECEPTACLE	L2	21
202-1A	LIVING	M1-LV-CIRC-A	LIVING ROOM GENERAL RECPTACLES	L2	23
202-1A	LIVING	M1-LV-CIRC-B	MICROWAVE/REFRIGERATOR	L2	24
202-1A	LIVING	M1-LV-CIRC-C	ROOM AC UNIT	AC2	6,8
202-1B	BEDROOM	M1-BD-CIRC-A	BEDROOM GENERAL RECEPTACLES	L2	12
202-1B	BEDROOM	M1-LV-CIRC-C	ROOM AC UNIT	AC2	6,8
202-1C	BATH	M1-BT-CIRC-A	BATH RECEPTACLE	L2	9
203-1A	LIVING	M1-LV-CIRC-D	SINK RECEPTACLE	L2	32
203-1A	LIVING	M1-LV-CIRC-A	LIVING ROOM GENERAL RECPTACLES	L2	30
203-1A	LIVING	M1-LV-CIRC-B	MICROWAVE/REFRIGERATOR	L2	33
203-1A	LIVING	M1-LV-CIRC-C	ROOM AC UNIT	AC2	29,31
203-1B	BEDROOM	M1-BD-CIRC-A	BEDROOM GENERAL RECEPTACLES	L2	31
203-1B	BEDROOM	M1-LV-CIRC-C	ROOM AC UNIT	AC2	29,31
203-1C	BATH	M1-BT-CIRC-A	BATH RECEPTACLE	L2	29
204-1A	LIVING	M1-LV-CIRC-D	SINK RECEPTACLE	L2	19
204-1A	LIVING	M1-LV-CIRC-A	LIVING ROOM GENERAL RECPTACLES	L2	20
204-1A	LIVING	M1-LV-CIRC-B	MICROWAVE/REFRIGERATOR	L2	22
204-1A	LIVING	M1-LV-CIRC-C	ROOM AC UNIT	AC2	2,4
204-1B	BEDROOM	M1-BD-CIRC-A	BEDROOM GENERAL RECEPTACLES	L2	15
204-1B	BEDROOM	M1-LV-CIRC-C	ROOM AC UNIT	AC2	2,4
204-1C	BATH	M1-BT-CIRC-A	BATH RECEPTACLE	L2	8
205-1A	LIVING	M1-LV-CIRC-D	SINK RECEPTACLE	L2	37
205-1A	LIVING	M1-LV-CIRC-A	LIVING ROOM GENERAL RECPTACLES	L2	42
205-1A	LIVING	M1-LV-CIRC-B	MICROWAVE/REFRIGERATOR	L2	43

SECOND FLOOR CIRCUITING SCHEDULE

ROOM NUMBER	ROOM NAME	CIRCUIT ID	DESCRIPTION	PANEL	CIRCUIT NUMBER
205-1A	LIVING	M1-LV-CIRC-C	ROOM AC UNIT	AC2	33,35
205-1B	BEDROOM	M1-BD-CIRC-A	BEDROOM GENERAL RECEPTACLES	L2	36
205-1B	BEDROOM	M1-LV-CIRC-C	ROOM AC UNIT	AC2	33,35
205-1C	BATH	M1-BT-CIRC-A	BATH RECEPTACLE	L2	34
206-4A	BEDROOM	M4-LV-CIRC-A	LIVING ROOM GENERAL RECPTACLES	L2	6
206-4A	BEDROOM	M4-LV-CIRC-B	COFFEE MAKER	L2	35
206-4A	BEDROOM	M4-LV-CIRC-C	MICROWAVE/REFRIGERATOR	L2	40
206-4A	BEDROOM	M4-LV-CIRC-D	ROOM AC UNIT	AC2	5,7
206-4B	BATH	M4-BT-CIRC-A	BATH RECEPTACLE	L2	78
207-1A	LIVING	M1-LV-CIRC-D	SINK RECEPTACLE	L2	46
207-1A	LIVING	M1-LV-CIRC-A	LIVING ROOM GENERAL RECPTACLES	L2	47
207-1A	LIVING	M1-LV-CIRC-B	MICROWAVE/REFRIGERATOR	L2	48
207-1A	LIVING	M1-LV-CIRC-C	ROOM AC UNIT	AC2	39,41
207-1B	BEDROOM	M1-BD-CIRC-A	BEDROOM GENERAL RECEPTACLES	L2	45
207-1B	BEDROOM	M1-LV-CIRC-C	ROOM AC UNIT	AC2	39,41
207-1C	BATH	M1-BT-CIRC-A	BATH RECEPTACLE	L2	44
208-1A	LIVING	M1-LV-CIRC-D	SINK RECEPTACLE	L2	75
208-1A	LIVING	M1-LV-CIRC-A	LIVING ROOM GENERAL RECPTACLES	L2	76
208-1A	LIVING	M1-LV-CIRC-B	MICROWAVE/REFRIGERATOR	L2	77
208-1A	LIVING	M1-LV-CIRC-C	ROOM AC UNIT	AC2	1,3
208-1B	BEDROOM	M1-BD-CIRC-A	BEDROOM GENERAL RECEPTACLES	L2	41
208-1B	BEDROOM	M1-LV-CIRC-C	ROOM AC UNIT	AC2	1,3
208-1C	BATH	M1-BT-CIRC-A	BATH RECEPTACLE	L2	68
209-1A	LIVING	M1-LV-CIRC-D	SINK RECEPTACLE	L2	51
209-1A	LIVING	M1-LV-CIRC-A	LIVING ROOM GENERAL RECPTACLES	L2	52
209-1A	LIVING	M1-LV-CIRC-B	MICROWAVE/REFRIGERATOR	L2	53
209-1A	LIVING	M1-LV-CIRC-C	ROOM AC UNIT	AC2	40,42
209-1B	BEDROOM	M1-BD-CIRC-A	BEDROOM GENERAL RECEPTACLES	L2	50
209-1B	BEDROOM	M1-LV-CIRC-C	ROOM AC UNIT	AC2	40,42
209-1C	BATH	M1-BT-CIRC-A	BATH RECEPTACLE	L2	49
210-1A	LIVING	M1-LV-CIRC-D	SINK RECEPTACLE	L2	65
210-1A	LIVING	M1-LV-CIRC-A	LIVING ROOM GENERAL RECPTACLES	L2	66
210-1A	LIVING	M1-LV-CIRC-B	MICROWAVE/REFRIGERATOR	L2	67
210-1A	LIVING	M1-LV-CIRC-C	ROOM AC UNIT	L2	62,64
210-1B	BEDROOM	M1-BD-CIRC-A	BEDROOM GENERAL RECEPTACLES	L2	63
210-1B	BEDROOM	M1-LV-CIRC-C	ROOM AC UNIT	L2	62,64
210-1C	BATH	M1-BT-CIRC-A	BATH RECEPTACLE	L2	61
211-1A	LIVING	M3-LV-CIRC-A	SINK RECEPTACLE	L2	71
211-1A	LIVING	M3-LV-CIRC-B	MICROWAVE/REFRIGERATOR	L2	72

SECOND FLOOR CIRCUITING SCHEDULE

ROOM NUMBER	ROOM NAME	CIRCUIT ID	DESCRIPTION	PANEL	CIRCUIT NUMBER
211-1A	LIVING	M3-LV-CIRC-E	ROOM AC UNIT	HVAC	20,22
211-1A	LIVING	M3-LV-CIRC-D	LIVING ROOM GENERAL RECPTACLES	L2	74
211-1A	LIVING	M3-LV-CIRC-C	COFFEE MAKER	L2	73
211-1B	BEDROOM	M3-BD-CIRC-A	BEDROOM GENERAL RECEPTACLES	L2	70
211-1B	BEDROOM	M3-BD-CIRC-B	ROOM AC UNIT	HVAC	13,15
211-1C	BATH	M3-BT-CIRC-A	BATH RECEPTACLE	L2	69
212-1A	LIVING	M1-LV-CIRC-D	SINK RECEPTACLE	L2	58
212-1A	LIVING	M1-LV-CIRC-A	LIVING ROOM GENERAL RECPTACLES	L2	59
212-1A	LIVING	M1-LV-CIRC-B	MICROWAVE/REFRIGERATOR	L2	60
212-1A	LIVING	M1-LV-CIRC-C	ROOM AC UNIT	L2	55,57
212-1B	BEDROOM	M1-BD-CIRC-A	BEDROOM GENERAL RECEPTACLES	L2	56
212-1B	BEDROOM	M1-LV-CIRC-C	ROOM AC UNIT	L2	55,57
212-1C	BATH	M1-BT-CIRC-A	BATH RECEPTACLE	L2	54

GENERAL NOTES:

1. THIS SHEET SHALL READ IN CONJUNCTION WITH ALL OTHER CONTRACT DOCUMENTS.
2. DRAWINGS ARE BASED ON EXISTING BUILDING DOCUMENTS AND FIELD OBSERVATION. CONTRACTOR SHALL FIELD VERIFY EXISTING CONDITIONS PRIOR TO COMMENCMENT OF WORK.
3. SEE E-001 AND E-002 FOR ELECTRICAL LEGEND, ABBREVIATIONS AND GENERAL NOTES. SEE SHEET E-701 - E-704 FOR PANELBOARD SCHEDULES.

NEW WORK NOTES:

1. SEE "ENLARGED PLAN TYPICAL SUITE 2ND THRU 4TH FLOOR - POWER" SHEET E-402 FOR MORE DETAIL.
2. SEE "ENLARGED PLAN - TYPICAL EXEC SUITE 2ND THRU 4TH FLOOR - POWER" SHEET E-402 FOR MORE DETAIL.
3. PROVIDE ADDITIONAL 120V FIRE ALARM CIRCUIT. PROVIDE JUNCTION BOX WITH COVERPLATE AND MAKE CIRCUIT SAFE.

LEGEND:

INDICATES TYPICAL ROOM POWER AND COMMUNICATIONS LAYOUT. SEE TYPICAL CIRCUITING SCHEDULE SHOWN ON THIS SHEET FOR MORE INFORMATION.

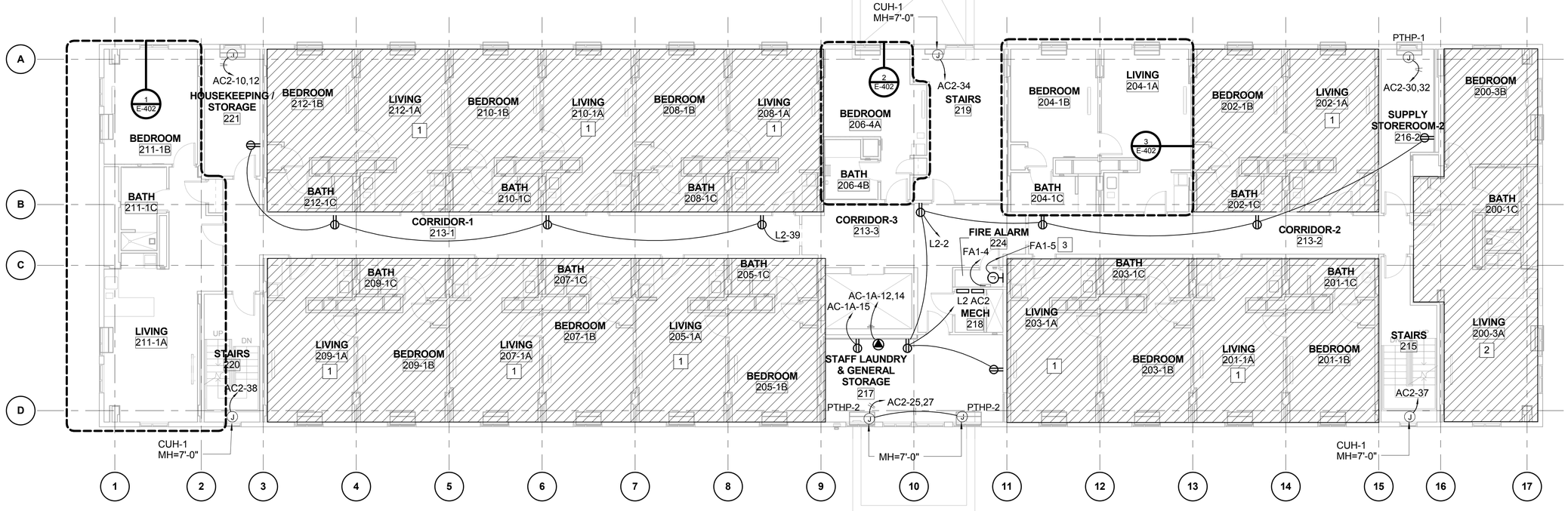

PLAN NORTH

ELECTRICAL NEW WORK PLAN - 2ND FLOOR - POWER

SCALE: 1/8" = 1'-0"

GRAPHIC SCALE:

1/8" =1'-0" 0' 4' 8' 16'

SYM	DESCRIPTION	DATE	APPR

NAVFAC

COMMONWEALTH OF VIRGINIA
JUSTIN C. CASEWELL
Lic. No.047237
5/4/16
PROFESSIONAL ENGINEER
SEAL

BURNS McDONNELL
1305 EXECUTIVE BLVD.
SUITE 160
CHESAPEAKE, VA 23320
A/E INFO

APPROVED
David W. Grunfeld
FOR COMMANDER NAVFAC / B.L.T.L.

ACTIVITY
PER SAT-TO DOCUMENT FROM GERARD MONTANI (PM&BRANCH HEAD) WITH FEAD AT NAVAL STATION NEWPORT NEWPORT, RI

SATISFACTORY TO DATE 4/20/16

DES JCC | DRW LAW | CHK KMS
PM / DM MLW/LEJ
BRANCH MANAGER
CHIEF ENG/ARCH DWG
FIRE PROTECTION

DEPARTMENT OF THE NAVY
NAVAL FACILITIES ENGINEERING COMMAND
NORTH IPT.
NAVAL FACILITIES ENGINEERING COMMAND ~ MID-ATLANTIC
NAVAL STATION NEWPORT
NEWPORT, RHODE ISLAND
NEWPORT, RHODE ISLAND
RENOVATION OF NGIS, BUILDING 172
ELECTRICAL NEW WORK PLAN - 2ND FLOOR - POWER

SCALE: AS NOTED
EPROJECT NO. 13770079
CONSTR. CONTR. NO.
NAVFAC DRAWING NO. 12719548
SHEET 163 OF 200
EP102

DRAWFORM REVISION: 10 MAY 2014

FILE NAME: C:\Revit_Projects\86232-NGISB\dgn172\Models\MEP\86232_E_jccashwell.rvt
REVDATE: 5/2/2016 1:41:45 PM

THIRD FLOOR CIRCUITING SCHEDULE

ROOM NUMBER	ROOM NAME	CIRCUIT ID	DESCRIPTION	PANEL	CIRCUIT NUMBER
300-3A	LIVING	M3-LV-CIRC-A	SINK RECEPTACLE	L3	40
300-3A	LIVING	M3-LV-CIRC-B	MICROWAVE/REFRIGERATOR	L3	39
300-3A	LIVING	M3-LV-CIRC-E	ROOM AC UNIT	HVAC	25,27
300-3A	LIVING	M3-LV-CIRC-D	LIVING ROOM GENERAL RECPTACLES	L3	37
300-3A	LIVING	M3-LV-CIRC-C	COFFEE MAKER	L3	38
300-3B	BEDROOM	M3-BD-CIRC-A	BEDROOM GENERAL RECEPTACLES	L3	42
300-3B	BEDROOM	M3-BD-CIRC-B	ROOM AC UNIT	HVAC	32,34
300-3C-1	BATH-1	M3-BT-CIRC-A	BATH RECEPTACLE	L3	41
301-1A	LIVING	M1-LV-CIRC-D	SINK RECEPTACLE	L3	34
301-1A	LIVING	M1-LV-CIRC-A	LIVING ROOM GENERAL RECPTACLES	L3	33
301-1A	LIVING	M1-LV-CIRC-B	MICROWAVE/REFRIGERATOR	L3	32
301-1A	LIVING	M1-LV-CIRC-C	ROOM AC UNIT	AC3	1,3
301-1B	BEDROOM	M1-BD-CIRC-A	BEDROOM GENERAL RECEPTACLES	L3	36
301-1B	BEDROOM	M1-LV-CIRC-C	ROOM AC UNIT	AC3	1,3
301-1C	BATH	M1-BT-CIRC-A	BATH RECEPTACLE	L3	35
302-1A	LIVING	M1-LV-CIRC-D	SINK RECEPTACLE	L3	45
302-1A	LIVING	M1-LV-CIRC-A	LIVING ROOM GENERAL RECPTACLES	L3	44
302-1A	LIVING	M1-LV-CIRC-B	MICROWAVE/REFRIGERATOR	L3	43
302-1A	LIVING	M1-LV-CIRC-C	ROOM AC UNIT	AC3	6,8
302-1B	BEDROOM	M1-BD-CIRC-A	BEDROOM GENERAL RECEPTACLES	L3	47
302-1B	BEDROOM	M1-LV-CIRC-C	ROOM AC UNIT	AC3	6,8
302-1C	BATH	M1-BT-CIRC-A	BATH RECEPTACLE	L3	46
303-1A	LIVING	M1-LV-CIRC-D	SINK RECEPTACLE	L3	29
303-1A	LIVING	M1-LV-CIRC-A	LIVING ROOM GENERAL RECPTACLES	L3	28
303-1A	LIVING	M1-LV-CIRC-B	MICROWAVE/REFRIGERATOR	L3	27
303-1A	LIVING	M1-LV-CIRC-C	ROOM AC UNIT	AC3	9,11
303-1B	BEDROOM	M1-BD-CIRC-A	BEDROOM GENERAL RECEPTACLES	L3	31
303-1B	BEDROOM	M1-LV-CIRC-C	ROOM AC UNIT	AC3	9,11
303-1C	BATH	M1-BT-CIRC-A	BATH RECEPTACLE	L3	30
304-1A	LIVING	M1-LV-CIRC-D	SINK RECEPTACLE	L3	50
304-1A	LIVING	M1-LV-CIRC-A	LIVING ROOM GENERAL RECPTACLES	L3	49
304-1A	LIVING	M1-LV-CIRC-B	MICROWAVE/REFRIGERATOR	L3	48
304-1A	LIVING	M1-LV-CIRC-C	ROOM AC UNIT	AC3	14,16
304-1B	BEDROOM	M1-BD-CIRC-A	BEDROOM GENERAL RECEPTACLES	L3	52
304-1B	BEDROOM	M1-LV-CIRC-C	ROOM AC UNIT	AC3	14,16
304-1C	BATH	M1-BT-CIRC-A	BATH RECEPTACLE	L3	51
305-1A	LIVING	M1-LV-CIRC-D	SINK RECEPTACLE	L3	23
305-1A	LIVING	M1-LV-CIRC-A	LIVING ROOM GENERAL RECPTACLES	L3	22
305-1A	LIVING	M1-LV-CIRC-B	MICROWAVE/REFRIGERATOR	L3	20

THIRD FLOOR CIRCUITING SCHEDULE

ROOM NUMBER	ROOM NAME	CIRCUIT ID	DESCRIPTION	PANEL	CIRCUIT NUMBER
305-1A	LIVING	M1-LV-CIRC-C	ROOM AC UNIT	AC3	17,19
305-1B	BEDROOM	M1-BD-CIRC-A	BEDROOM GENERAL RECEPTACLES	L3	21
305-1B	BEDROOM	M1-LV-CIRC-C	ROOM AC UNIT	AC3	17,19
305-1C	BATH	M1-BT-CIRC-A	BATH RECEPTACLE	L3	19
306-4A	BEDROOM	M4-LV-CIRC-A	LIVING ROOM GENERAL RECPTACLES	L3	74
306-4A	BEDROOM	M4-LV-CIRC-B	COFFEE MAKER	L3	75
306-4A	BEDROOM	M4-LV-CIRC-C	MICROWAVE/REFRIGERATOR	L3	76
306-4A	BEDROOM	M4-LV-CIRC-D	ROOM AC UNIT	AC3	21,23
306-4B	BATH	M4-BT-CIRC-A	BATH RECEPTACLE	L3	77
307-1A	LIVING	M1-LV-CIRC-D	SINK RECEPTACLE	L3	16
307-1A	LIVING	M1-LV-CIRC-A	LIVING ROOM GENERAL RECPTACLES	L3	15
307-1A	LIVING	M1-LV-CIRC-B	MICROWAVE/REFRIGERATOR	L3	14
307-1A	LIVING	M1-LV-CIRC-C	ROOM AC UNIT	AC3	25,27
307-1B	BEDROOM	M1-BD-CIRC-A	BEDROOM GENERAL RECEPTACLES	L3	18
307-1B	BEDROOM	M1-LV-CIRC-C	ROOM AC UNIT	AC3	25,27
307-1C	BATH	M1-BT-CIRC-A	BATH RECEPTACLE	L3	17
308-1A	LIVING	M1-LV-CIRC-D	SINK RECEPTACLE	L3	53
308-1A	LIVING	M1-LV-CIRC-A	LIVING ROOM GENERAL RECPTACLES	L3	54
308-1A	LIVING	M1-LV-CIRC-B	MICROWAVE/REFRIGERATOR	L3	55
308-1A	LIVING	M1-LV-CIRC-C	ROOM AC UNIT	AC3	29,31
308-1B	BEDROOM	M1-BD-CIRC-A	BEDROOM GENERAL RECEPTACLES	L3	56
308-1B	BEDROOM	M1-LV-CIRC-C	ROOM AC UNIT	AC3	29,31
308-1C	BATH	M1-BT-CIRC-A	BATH RECEPTACLE	L3	57
309-1A	LIVING	M1-LV-CIRC-D	SINK RECEPTACLE	L3	11
309-1A	LIVING	M1-LV-CIRC-A	LIVING ROOM GENERAL RECPTACLES	L3	6
309-1A	LIVING	M1-LV-CIRC-B	MICROWAVE/REFRIGERATOR	L3	4
309-1A	LIVING	M1-LV-CIRC-C	ROOM AC UNIT	AC3	33,35
309-1B	BEDROOM	M1-BD-CIRC-A	BEDROOM GENERAL RECEPTACLES	L3	12
309-1B	BEDROOM	M1-LV-CIRC-C	ROOM AC UNIT	AC3	33,35
309-1C	BATH	M1-BT-CIRC-A	BATH RECEPTACLE	L3	13
310-1A	LIVING	M1-LV-CIRC-D	SINK RECEPTACLE	L3	60
310-1A	LIVING	M1-LV-CIRC-A	LIVING ROOM GENERAL RECPTACLES	L3	59
310-1A	LIVING	M1-LV-CIRC-B	MICROWAVE/REFRIGERATOR	L3	58
310-1A	LIVING	M1-LV-CIRC-C	ROOM AC UNIT	AC3	37,39

THIRD FLOOR CIRCUITING SCHEDULE

ROOM NUMBER	ROOM NAME	CIRCUIT ID	DESCRIPTION	PANEL	CIRCUIT NUMBER
310-1B	BEDROOM	M1-BD-CIRC-A	BEDROOM GENERAL RECEPTACLES	L3	62
310-1B	BEDROOM	M1-LV-CIRC-C	ROOM AC UNIT	AC3	37,39
310-1C	BATH	M1-BT-CIRC-A	BATH RECEPTACLE	L3	61
311-1A	LIVING	M3-LV-CIRC-A	SINK RECEPTACLE	L3	7
311-1A	LIVING	M3-LV-CIRC-B	MICROWAVE/REFRIGERATOR	L3	8
311-1A	LIVING	M3-LV-CIRC-E	ROOM AC UNIT	HVAC	28,30
311-1A	LIVING	M3-LV-CIRC-D	LIVING ROOM GENERAL RECPTACLES	L3	10
311-1A	LIVING	M3-LV-CIRC-C	COFFEE MAKER	L3	9
311-1B	BEDROOM	M3-BD-CIRC-A	BEDROOM GENERAL RECEPTACLES	L3	3
311-1B	BEDROOM	M3-BD-CIRC-B	ROOM AC UNIT	HVAC	21,23
311-1C	BATH	M3-BT-CIRC-A	BATH RECEPTACLE	L3	5
312-1A	LIVING	M1-LV-CIRC-D	SINK RECEPTACLE	L3	65
312-1A	LIVING	M1-LV-CIRC-A	LIVING ROOM GENERAL RECPTACLES	L3	64
312-1A	LIVING	M1-LV-CIRC-B	MICROWAVE/REFRIGERATOR	L3	63
312-1A	LIVING	M1-LV-CIRC-C	ROOM AC UNIT	AC3	34,36
312-1B	BEDROOM	M1-BD-CIRC-A	BEDROOM GENERAL RECEPTACLES	L3	67
312-1B	BEDROOM	M1-LV-CIRC-C	ROOM AC UNIT	AC3	34,36
312-1C	BATH	M1-BT-CIRC-A	BATH RECEPTACLE	L3	66

LEGEND:

INDICATES TYPICAL ROOM POWER AND COMMUNICATIONS LAYOUT. SEE TYPICAL CIRCUITING SCHEDULE SHOWN ON THIS SHEET FOR MORE INFORMATION.

GENERAL NOTES:

1. THIS SHEET SHALL READ IN CONJUNCTION WITH ALL OTHER CONTRACT DOCUMENTS.
2. DRAWINGS ARE BASED ON EXISTING BUILDING DOCUMENTS AND FIELD OBSERVATION. CONTRACTOR SHALL FIELD VERIFY EXISTING CONDITIONS PRIOR TO COMMENCMENT OF WORK.
3. SEE E-001 AND E-002 FOR ELECTRICAL LEGEND, ABBREVIATIONS AND GENERAL NOTES. SEE SHEET E-701 - E-704 FOR PANELBOARD SCHEDULES.

NEW WORK NOTES:

1. SEE "ENLARGED PLAN TYPICAL SUITE 2ND THRU 4TH FLOOR - POWER & TELECOM" SHEET E-402 FOR MORE DETAIL.
2. SEE "ENLARGED PLAN - TYPICAL EXEC SUITE 2ND THRU 4TH FLOOR - POWER & TELECOM" SHEET E-402 FOR MORE DETAIL.
3. SEE "ENLARGED PLAN - TYPICAL STANDARD ROOM 2ND THRU 4TH FLOOR - POWER & TELECOM" SHEET E-402 FOR MORE DETAIL.
4. PROVIDE ADDITIONAL 120V FIRE ALARM CIRCUIT. PROVIDE JUNCTION BOX WITH COVERPLATE AND MAKE CIRCUIT SAFE.

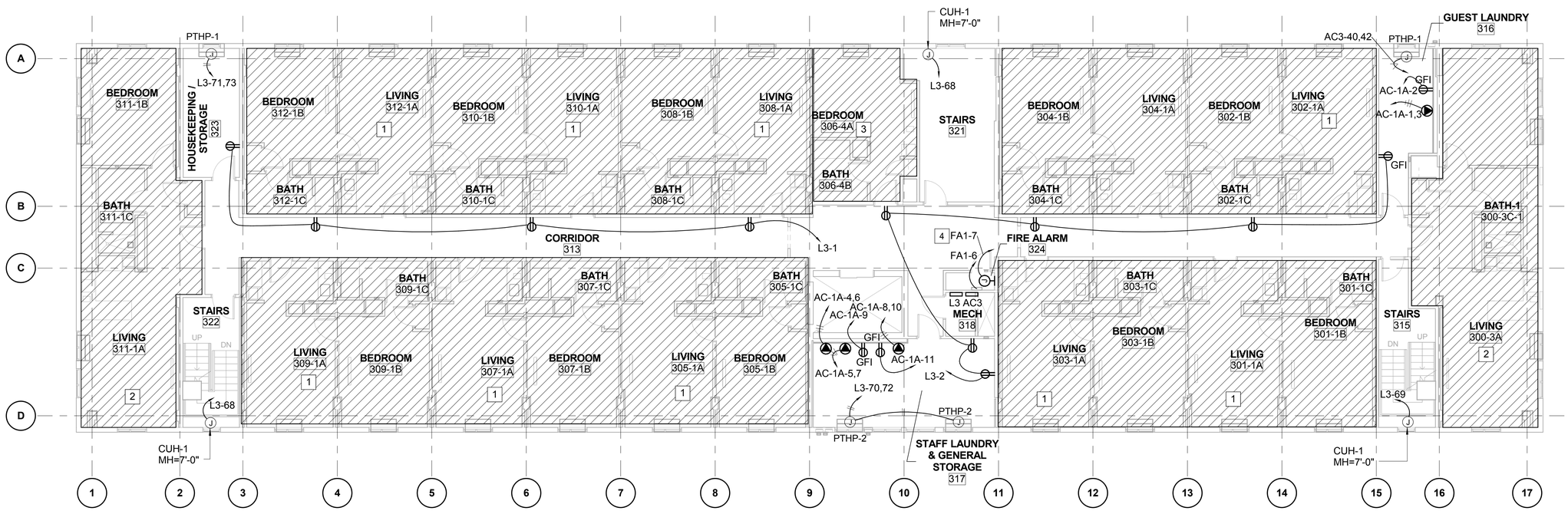

PLAN NORTH

ELECTRICAL NEW WORK PLAN - 3RD FLOOR -POWER

SCALE: 1/8" = 1'-0"

GRAPHIC SCALE:

1/8" =1'-0" 0' 4' 8' 16'

SYM	DESCRIPTION	DATE	APPR

NAVFAC

COMMONWEALTH OF VIRGINIA
JUSTIN C. CASEWELL
Lic. No.047237
5/4/16
PROFESSIONAL ENGINEER
SEAL

BURNS McDONNELL
1305 EXECUTIVE BLVD.
SUITE 160
CHESAPEAKE, VA 23320
A/E INFO

APPROVED
David W. Grunfeld
FOR COMMANDER NAVFAC / B.L.T.L.

ACTIVITY
PER SAT-TO DOCUMENT FROM GERARD MONTANI (PM&BRANCH HEAD) WITH FEAD AT NAVAL STATION NEWPORT-NEWPORT, RI
SATISFACTORY TO DATE 4/20/16

DES JCC | DRW LAW | CHK KMS
PM / DM MLW/LEJ
BRANCH MANAGER
CHIEF ENG/ARCH DWG
FIRE PROTECTION

DEPARTMENT OF THE NAVY
NAVAL FACILITIES ENGINEERING COMMAND
NORTH IPT
NAVAL FACILITIES ENGINEERING COMMAND - MID-ATLANTIC
NEWPORT, RHODE ISLAND
NAVAL STATION NEWPORT
NEWPORT, RHODE ISLAND
RENOVATION OF NGIS, BUILDING 172
ELECTRICAL NEW WORK PLAN - 3RD FLOOR - POWER

SCALE: AS NOTED
EPROJECT NO. 13770079
CONSTR. CONTR. NO.
NAVFAC DRAWING NO. 12719549
SHEET 164 OF 200
EP103

DRAWFORM REVISION: 10 MAY 2014

FILE NAME: C:\Revit_Projects\86232-NGISBldg172\Models\MEP\86232_E_jccashwell.rvt
REVDATE: 5/2/2016 1:41:48 PM

LEGEND:

INDICATES TYPICAL ROOM POWER AND COMMUNICATIONS LAYOUT. SEE TYPICAL CIRCUITING SCHEDULE SHOWN ON THIS SHEET FOR MORE INFORMATION.

GENERAL NOTES:

1. THIS SHEET SHALL READ IN CONJUNCTION WITH ALL OTHER CONTRACT DOCUMENTS.
2. DRAWINGS ARE BASED ON EXISTING BUILDING DOCUMENTS AND FIELD OBSERVATION. CONTRACTOR SHALL FIELD VERIFY EXISTING CONDITIONS PRIOR TO COMMENCMENT OF WORK.
3. SEE E-001 AND E-002 FOR ELECTRICAL LEGEND, ABBREVIATIONS AND GENERAL NOTES. SEE SHEET E-701 - E-704 FOR PANELBOARD SCHEDULES.

NEW WORK NOTES:

1. SEE "ENLARGED PLAN TYPICAL SUITE 2ND THRU 4TH FLOOR - POWER & TELECOM" SHEET E-402 FOR MORE DETAIL.
2. SEE "ENLARGED PLAN - TYPICAL EXEC SUITE 2ND THRU 4TH FLOOR - POWER & TELECOM" SHEET E-402 FOR MORE DETAIL.
3. SEE "ENLARGED PLAN - TYPICAL STANDARD ROOM 2ND THRU 4TH FLOOR - POWER & TELECOM" SHEET E-402 FOR MORE DETAIL.
4. PROVIDE ADDITIONAL 120V FIRE ALARM CIRCUIT. PROVIDE JUNCTION BOX WITH COVERPLATE AND MAKE CIRCUIT SAFE.

FOURTH FLOOR CIRCUITING SCHEDULE

ROOM NUMBER	ROOM NAME	CIRCUIT ID	DESCRIPTION	PANEL	CIRCUIT NUMBER
400-1C	BATH	M3-BT-CIRC-A	BATH RECEPTACLE	L4	49
400-3A	LIVING	M3-LV-CIRC-A	SINK RECEPTACLE	L4	48
400-3A	LIVING	M3-LV-CIRC-B	MICROWAVE/REFRIGERATOR	L4	47
400-3A	LIVING	M3-LV-CIRC-E	ROOM AC UNIT	AC4	23,25
400-3A	LIVING	M3-LV-CIRC-D	LIVING ROOM GENERAL RECPTACLES	L4	45
400-3A	LIVING	M3-LV-CIRC-C	COFFEE MAKER	L4	46
400-3B	BEDROOM	M3-BD-CIRC-A	BEDROOM GENERAL RECEPTACLES	L4	50
400-3B	BEDROOM	M3-BD-CIRC-B	ROOM AC UNIT	AC4	24,26
401-1A	LIVING	M1-LV-CIRC-D	SINK RECEPTACLE	L4	42
401-1A	LIVING	M1-LV-CIRC-A	LIVING ROOM GENERAL RECPTACLES	L4	41
401-1A	LIVING	M1-LV-CIRC-B	MICROWAVE/REFRIGERATOR	L4	40
401-1A	LIVING	M1-LV-CIRC-C	ROOM AC UNIT	AC4	20,22
401-1B	BEDROOM	M1-BD-CIRC-A	BEDROOM GENERAL RECEPTACLES	L4	43
401-1B	BEDROOM	M1-LV-CIRC-C	ROOM AC UNIT	AC4	20,22
401-1C	BATH	M1-BT-CIRC-A	BATH RECEPTACLE	L4	44
402-1A	LIVING	M1-LV-CIRC-D	SINK RECEPTACLE	L4	53
402-1A	LIVING	M1-LV-CIRC-A	LIVING ROOM GENERAL RECPTACLES	L4	52
402-1A	LIVING	M1-LV-CIRC-B	MICROWAVE/REFRIGERATOR	L4	51
402-1A	LIVING	M1-LV-CIRC-C	ROOM AC UNIT	AC4	27,29
402-1B	BEDROOM	M1-BD-CIRC-A	BEDROOM GENERAL RECEPTACLES	L4	54
402-1B	BEDROOM	M1-LV-CIRC-C	ROOM AC UNIT	AC4	27,29
402-1C	BATH	M1-BT-CIRC-A	BATH RECEPTACLE	L4	55
403-1A	LIVING	M1-LV-CIRC-D	SINK RECEPTACLE	L4	37
403-1A	LIVING	M1-LV-CIRC-A	LIVING ROOM GENERAL RECPTACLES	L4	36
403-1A	LIVING	M1-LV-CIRC-B	MICROWAVE/REFRIGERATOR	L4	35
403-1A	LIVING	M1-LV-CIRC-C	ROOM AC UNIT	AC4	19,21
403-1B	BEDROOM	M1-BD-CIRC-A	BEDROOM GENERAL RECEPTACLES	L4	38
403-1B	BEDROOM	M1-LV-CIRC-C	ROOM AC UNIT	AC4	19,21
403-1C	BATH	M1-BT-CIRC-A	BATH RECEPTACLE	L4	39
404-1A	LIVING	M1-LV-CIRC-D	SINK RECEPTACLE	L4	58
404-1A	LIVING	M1-LV-CIRC-A	LIVING ROOM GENERAL RECPTACLES	L4	57

FOURTH FLOOR CIRCUITING SCHEDULE

ROOM NUMBER	ROOM NAME	CIRCUIT ID	DESCRIPTION	PANEL	CIRCUIT NUMBER
404-1A	LIVING	M1-LV-CIRC-B	MICROWAVE/REFRIGERATOR	L4	56
404-1A	LIVING	M1-LV-CIRC-C	ROOM AC UNIT	AC4	28,30
404-1B	BEDROOM	M1-BD-CIRC-A	BEDROOM GENERAL RECEPTACLES	L4	60
404-1B	BEDROOM	M1-LV-CIRC-C	ROOM AC UNIT	AC4	28,30
404-1C	BATH	M1-BT-CIRC-A	BATH RECEPTACLE	L4	59
405-1A	LIVING	M1-LV-CIRC-D	SINK RECEPTACLE	L4	33
405-1A	LIVING	M1-LV-CIRC-A	LIVING ROOM GENERAL RECPTACLES	L4	29
405-1A	LIVING	M1-LV-CIRC-B	MICROWAVE/REFRIGERATOR	L4	28
405-1A	LIVING	M1-LV-CIRC-C	ROOM AC UNIT	AC4	16,18
405-1B	BEDROOM	M1-BD-CIRC-A	BEDROOM GENERAL RECEPTACLES	L4	34
405-1B	BEDROOM	M1-LV-CIRC-C	ROOM AC UNIT	AC4	16,18
405-1C	BATH	M1-BT-CIRC-A	BATH RECEPTACLE	L4	30
406-4A	BEDROOM	M4-LV-CIRC-A	LIVING ROOM GENERAL RECPTACLES	L4	71
406-4A	BEDROOM	M4-LV-CIRC-B	COFFEE MAKER	L4	72
406-4A	BEDROOM	M4-LV-CIRC-C	MICROWAVE/REFRIGERATOR	L4	73
406-4A	BEDROOM	M4-LV-CIRC-D	ROOM AC UNIT	AC4	35,37
406-4B	BATH	M4-BT-CIRC-A	BATH RECEPTACLE	L4	74
407-1A	LIVING	M1-LV-CIRC-D	SINK RECEPTACLE	L4	26
407-1A	LIVING	M1-LV-CIRC-A	LIVING ROOM GENERAL RECPTACLES	L4	25
407-1A	LIVING	M1-LV-CIRC-B	MICROWAVE/REFRIGERATOR	L4	24
407-1A	LIVING	M1-LV-CIRC-C	ROOM AC UNIT	AC4	15,17
407-1B	BEDROOM	M1-BD-CIRC-A	BEDROOM GENERAL RECEPTACLES	L4	27
407-1B	BEDROOM	M1-LV-CIRC-C	ROOM AC UNIT	AC4	15,17
407-1C	BATH	M1-BT-CIRC-A	BATH RECEPTACLE	L4	31
408-1A	LIVING	M1-BD-CIRC-A	BEDROOM GENERAL RECEPTACLES	L4	9
408-1A	LIVING	M1-LV-CIRC-A	LIVING ROOM GENERAL RECPTACLES	L4	7
408-1A	LIVING	M1-LV-CIRC-B	MICROWAVE/REFRIGERATOR	L4	8
408-1A	LIVING	M1-LV-CIRC-C	ROOM AC UNIT	AC4	11,13
408-1B	BEDROOM	M1-BD-CIRC-A	BEDROOM GENERAL RECEPTACLES	L4	11
408-1B	BEDROOM	M1-LV-CIRC-C	ROOM AC UNIT	AC4	11,13
408-1C	BATH	M1-BT-CIRC-A	BATH RECEPTACLE	L4	12

FOURTH FLOOR CIRCUITING SCHEDULE

ROOM NUMBER	ROOM NAME	CIRCUIT ID	DESCRIPTION	PANEL	CIRCUIT NUMBER
409-1A	LIVING	M1-LV-CIRC-D	SINK RECEPTACLE	L4	22
409-1A	LIVING	M1-LV-CIRC-A	LIVING ROOM GENERAL RECPTACLES	L4	21
409-1A	LIVING	M1-LV-CIRC-B	MICROWAVE/REFRIGERATOR	L4	19
409-1A	LIVING	M1-LV-CIRC-C	ROOM AC UNIT	AC4	12,14
409-1B	BEDROOM	M1-BD-CIRC-A	BEDROOM GENERAL RECEPTACLES	L4	23
409-1B	BEDROOM	M1-LV-CIRC-C	ROOM AC UNIT	AC4	12,14
409-1C	BATH	M1-BT-CIRC-A	BATH RECEPTACLE	L4	32
410-1A	LIVING	M1-LV-CIRC-D	SINK RECEPTACLE	L4	63
410-1A	LIVING	M1-LV-CIRC-A	LIVING ROOM GENERAL RECPTACLES	L4	62
410-1A	LIVING	M1-LV-CIRC-B	MICROWAVE/REFRIGERATOR	L4	61
410-1A	LIVING	M1-LV-CIRC-C	ROOM AC UNIT	AC4	31,33
410-1B	BEDROOM	M1-BD-CIRC-A	BEDROOM GENERAL RECEPTACLES	L4	64
410-1B	BEDROOM	M1-LV-CIRC-C	ROOM AC UNIT	AC4	31,33
410-1C	BATH	M1-BT-CIRC-A	BATH RECEPTACLE	L4	65
411-3A	LIVING	M3-LV-CIRC-A	SINK RECEPTACLE	L4	14
411-3A	LIVING	M3-LV-CIRC-B	MICROWAVE/REFRIGERATOR	L4	15
411-3A	LIVING	M3-LV-CIRC-E	ROOM AC UNIT	L4	18,20
411-3A	LIVING	M3-LV-CIRC-D	LIVING ROOM GENERAL RECPTACLES	L4	17
411-3A	LIVING	M3-LV-CIRC-C	COFFEE MAKER	L4	16
411-3B	BEDROOM	M3-BD-CIRC-A	BEDROOM GENERAL RECEPTACLES	L4	13
411-3B	BEDROOM	M3-BD-CIRC-B	ROOM AC UNIT	AC4	8,10
411-3C	BATH	M3-BT-CIRC-A	BATH RECEPTACLE	AC4	9
412-1A	LIVING	M1-LV-CIRC-D	SINK RECEPTACLE	L4	68
412-1A	LIVING	M1-LV-CIRC-A	LIVING ROOM GENERAL RECPTACLES	L4	67
412-1A	LIVING	M1-LV-CIRC-B	MICROWAVE/REFRIGERATOR	L4	66
412-1A	LIVING	M1-LV-CIRC-C	ROOM AC UNIT	AC4	32,34
412-1B	BEDROOM	M1-BD-CIRC-A	BEDROOM GENERAL RECEPTACLES	L4	69
412-1B	BEDROOM	M1-LV-CIRC-C	ROOM AC UNIT	AC4	32,34
412-1C	BATH	M1-BT-CIRC-A	BATH RECEPTACLE	L4	70

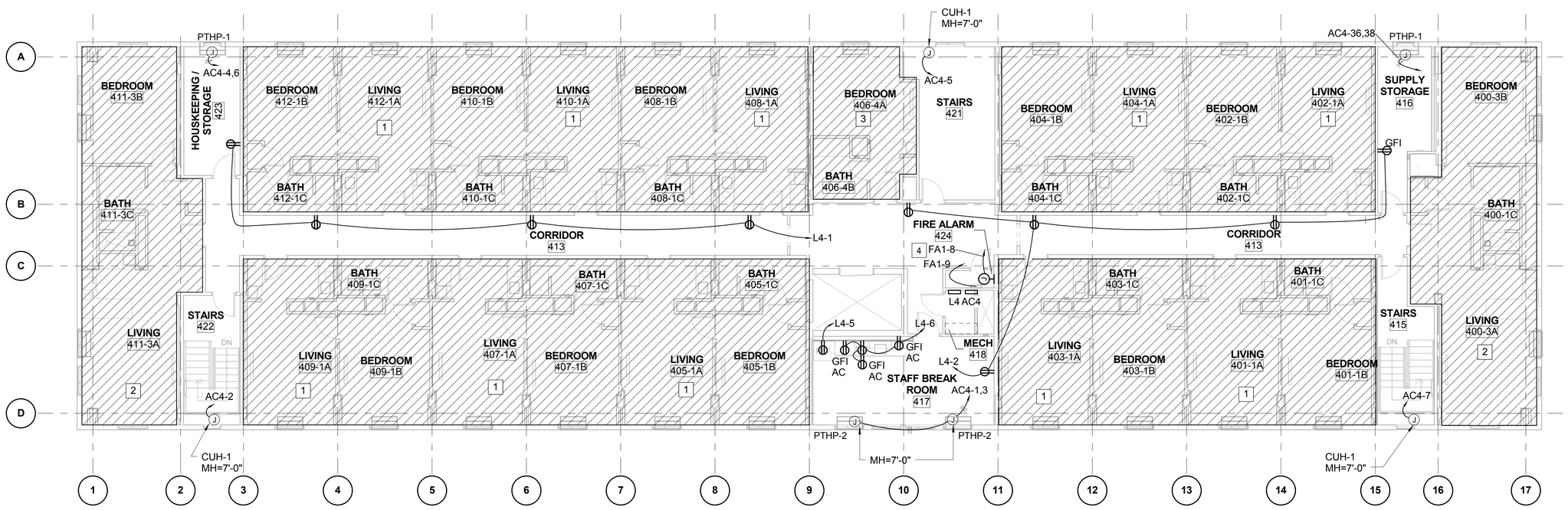

PLAN NORTH

ELECTRICAL NEW WORK PLAN - 4TH FLOOR - POWER

SCALE: 1/8" = 1'-0"

GRAPHIC SCALE:

1/8" =1'-0" 0' 4' 8' 16'

SYM	DESCRIPTION	DATE	APPR

NAVFAC

COMMONWEALTH OF VIRGINIA
JUSTIN C. CASEWELL
Lic. No.047237
5/4/16
PROFESSIONAL ENGINEER
SEAL

BURNS McDONNELL
1305 EXECUTIVE BLVD.
SUITE 160
CHESAPEAKE, VA 23320
A/E INFO

APPROVED
David W. Grunfeld
FOR COMMANDER NAVFAC / B.L.T.L.

ACTIVITY
PER SAT-TO DOCUMENT FROM GERARD MONTANI (PM&BRANCH HEAD) WITH FEAD AT NAVAL STATION NEWPORT NEWPORT, RI

SATISFACTORY TO DATE 4/20/16

DES JCC	DRW LAW	CHK KMS
PM / DM	MLW/LEJ	
BRANCH MANAGER		
CHIEF ENG/ARCH	DWG	
FIRE PROTECTION		

DEPARTMENT OF THE NAVY
NAVAL FACILITIES ENGINEERING COMMAND
NORTH IPT
NAVAL FACILITIES ENGINEERING COMMAND ~ MID-ATLANTIC
NAVAL STATION NEWPORT
NEWPORT, RHODE ISLAND
RENOVATION OF NGIS, BUILDING 172
ELECTRICAL NEW WORK - 4TH FLOOR - POWER

SCALE: AS NOTED
EPROJECT NO. 13770079
CONSTR. CONTR. NO.
NAVFAC DRAWING NO. 12719550
SHEET 165 OF 200
EP104

DRAWFORM REVISION: 10 MAY 2014

FILE NAME: C:\Revit_Projects\86232-NGISB\dg172\Models\MEP\86232_E_jcasheweil.rvt
REV/DATE: 5/2/2016 1:41:51 PM

GENERAL NOTES:

1. THIS SHEET SHALL READ IN CONJUNCTION WITH ALL OTHER CONTRACT DOCUMENTS.
2. DRAWINGS ARE BASED ON EXISTING BUILDING DOCUMENTS AND FIELD OBSERVATION. CONTRACTOR SHALL FIELD VERIFY EXISTING CONDITIONS PRIOR TO COMMENCMENT OF WORK.
3. SEE E-001 AND E-002 FOR ELECTRICAL LEGEND, ABBREVIATIONS AND GENERAL NOTES. SEE SHEET E-701 - E-704 FOR PANELBOARD SCHEDULES.

NEW WORK NOTES:

1. ROUTE CONDUIT AND CONDUCTORS FROM BASEMENT TO DOAS-1 DISONNECT UTILIZING EXISTING ELECTRICAL PATHWAYS. DO NOT CORE DRILL ANY NEW PATHWAYS THROUGH STRUCTURAL SLAB.

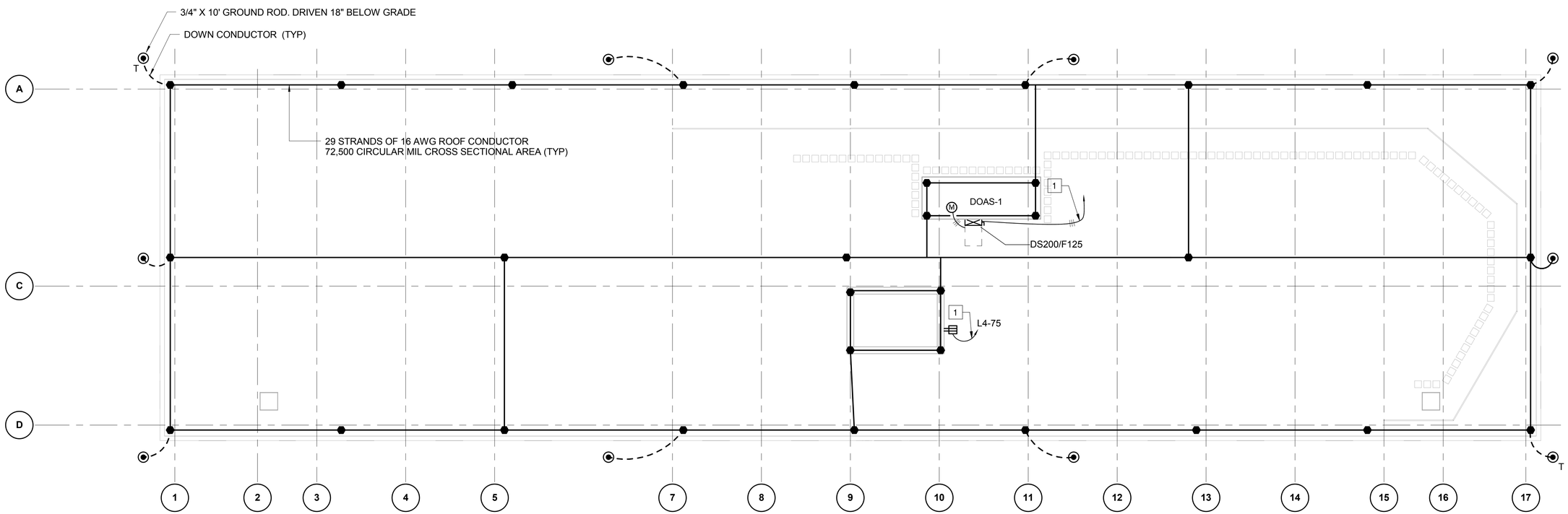

PLAN NORTH

ELECTRICAL NEW WORK PLAN - ROOF - POWER & LIGHTNING PROTECTION

SCALE: 1/8" = 1'-0"

GRAPHIC SCALE:

1/8" =1'-0" 0' 4' 8' 16'

SYM	DESCRIPTION	DATE	APPR

NAVFAC

COMMONWEALTH OF VIRGINIA
JUSTIN C. CASHWELL
Lic. No.047237
5/4/16
PROFESSIONAL ENGINEER
SEAL

BURNS McDONNELL
1305 EXECUTIVE BLVD.
SUITE 160
CHESAPEAKE, VA 23320
A/E INFO

APPROVED
FOR COMMANDER NAVFAC / B.L.T.L.

ACTIVITY
PER SAT-TO DOCUMENT FROM GERARD MONTANI (PM&BRANCH HEAD) WITH FEAD AT NAVAL STATION NEWPORT, NEWPORT, RI

SATISFACTORY TO DATE 4/20/16

DES JCC	DRW LAW	CHK KMS
PM / DM	MLW/LEJ	
BRANCH MANAGER		
CHIEF ENG/ARCH	DWG	
FIRE PROTECTION		

DEPARTMENT OF THE NAVY
NAVAL FACILITIES ENGINEERING COMMAND
NAVAL FACILITIES ENGINEERING COMMAND ~ MID-ATLANTIC
NORTH IPT
NAVAL STATION NEWPORT
NEWPORT, RHODE ISLAND
NEWPORT, RHODE ISLAND

RENOVATION OF NGIS, BUILDING 172

ELECTRICAL NEW WORK PLAN - ROOF - POWER & LIGHTNING PROTECTION

SCALE: AS NOTED
EPROJECT NO. 13770079
CONSTR. CONTR. NO.
NAVFAC DRAWING NO. 12719551
SHEET 166 OF 200
EP105

DRAWFORM REVISION: 10 MAY 2014

FILE NAME: C:\Revit_Projects\86232-NGISBld\g172\Models\MEP\86232_E_jccashwell.rvt
REVDATE: 5/2/2016 1:41:52 PM

ELECTRICAL CIRCUIT DESCRIPTIONS E-401	
CIRCUIT ID	DESCRIPTION
M1-BD-CIRC-A	BEDROOM GENERAL RECEPTACLES
M1-BT-CIRC-A	BATH RECEPTACLE
M1-LV-CIRC-A	LIVING ROOM GENERAL RECPTACLES
M1-LV-CIRC-B	MICROWAVE/REFRIGERATOR
M1-LV-CIRC-C	ROOM AC UNIT
M1-LV-CIRC-D	SINK RECEPTACLE
M3-BD-CIRC-A	BEDROOM GENERAL RECEPTACLES
M3-BD-CIRC-B	ROOM AC UNIT
M3-BT-CIRC-A	BATH RECEPTACLE
M3-LV-CIRC-A	SINK RECEPTACLE
M3-LV-CIRC-B	MICROWAVE/REFRIGERATOR
M3-LV-CIRC-C	COFFEE MAKER
M3-LV-CIRC-D	LIVING ROOM GENERAL RECPTACLES
M3-LV-CIRC-E	ROOM AC UNIT

GENERAL NOTES:

1. THIS SHEET SHALL READ IN CONJUNCTION WITH ALL OTHER CONTRACT DOCUMENTS.
2. DRAWINGS ARE BASED ON EXISTING BUILDING DOCUMENTS AND FIELD OBSERVATION. CONTRACTOR SHALL FIELD VERIFY EXISTING CONDITIONS PRIOR TO COMMENCMENT OF WORK.
3. SEE E-001 AND E-002 FOR ELECTRICAL LEGEND, ABBREVIATIONS AND GENERAL NOTES. SEE SHEET E-701 - E-704 FOR PANELBOARD SCHEDULES.

KEY NOTES:

1. PROVIDE 2-POLE, SINGLE-THROW ROOM MASTER OVERRIDE SWITCH TO CONTROL SPLIT WIRED RECEPTACLES IN GUEST ROOM SUITES AND ASSOCIATED LIGHTING CIRCUITS AS INDICATED ON E-403. SEE E-604 FOR WIRING DIAGRAM.

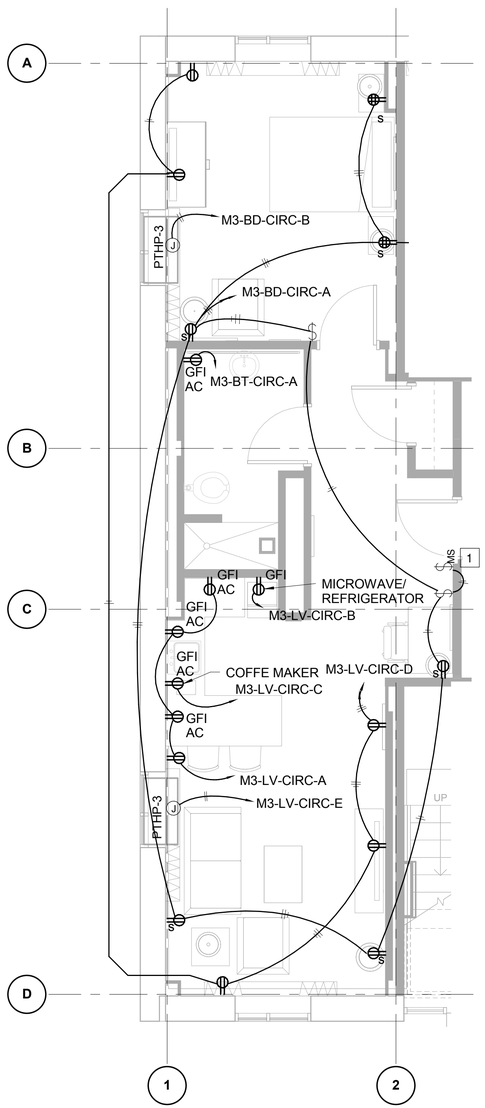

ENLARGED PLAN - TYPICAL MODULE 3
1ST FLOOR - POWER
1 E-401 SCALE: 1/4" = 1'-0"

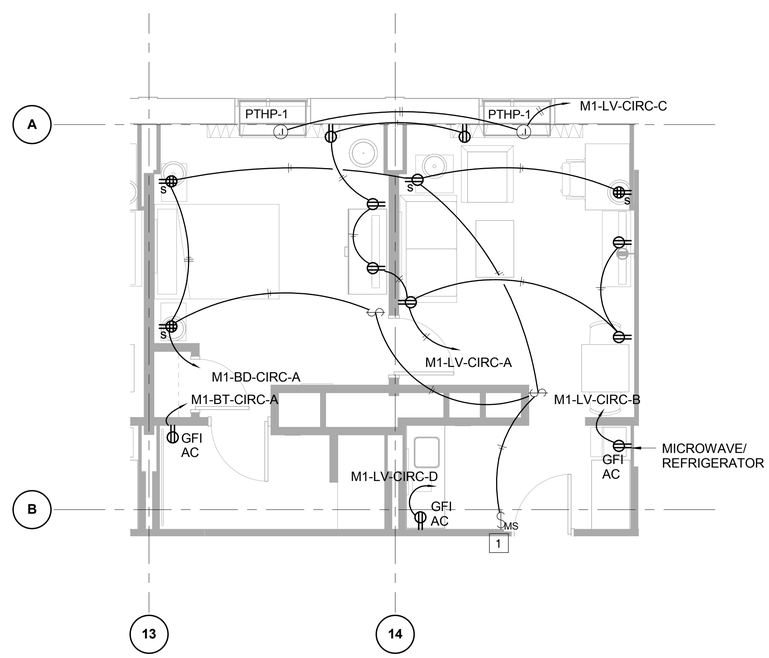

ENLARGED PLAN - TYPICAL MODULE 1
1ST FLOOR - POWER
2 E-401 SCALE: 1/4" = 1'-0"

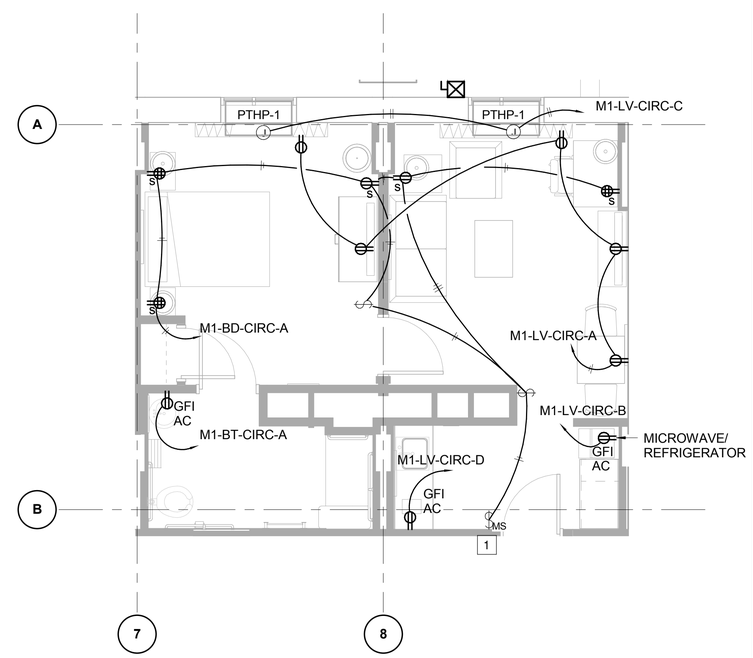

ENLARGED PLANS
TYPICAL MODULE 1 (ABA UNIT) - POWER
4 E-401 SCALE: 1/4" = 1'-0"

SYM	DESCRIPTION	DATE	APPR

NAVFAC

COMMONWEALTH OF VIRGINIA
JUSTIN C. CASHWELL
Lic. No.047237
5/4/16
PROFESSIONAL ENGINEER
SEAL

BURNS McDONNELL
1305 EXECUTIVE BLVD.
SUITE 160
CHESAPEAKE, VA 23320
A/E INFO.

APPROVED
FOR COMMANDER NAVFAC / B.L.T.L.

ACTIVITY
PER SAT-T0 DOCUMENT FROM GERARD MONTANI (PM&BRANCH HEAD) WITH FEAD AT NAVAL STATION NEWPORT, NEWPORT, RI

SATISFACTORY TO DATE 4/20/16

DES JCC	DRW LAW	CHK KMS
PM / DM	MLW/LEJ	
BRANCH MANAGER		
CHIEF ENG/ARCH	DWG	
FIRE PROTECTION		

DEPARTMENT OF THE NAVY
NAVAL FACILITIES ENGINEERING COMMAND
NORTH IPT
NAVAL FACILITIES ENGINEERING COMMAND ~ MID-ATLANTIC
NAVAL STATION NEWPORT
NEWPORT, RHODE ISLAND
NEWPORT, RHODE ISLAND
RENOVATION OF NGIS, BUILDING 172
ENLARGED PLANS

SCALE: AS NOTED
EPROJECT NO. 13770079
CONSTR. CONTR. NO.
NAVFAC DRAWING NO. 12719557
SHEET 172 OF 200
E-401

DRAWFORM REVISION: 10 MAY 2014

FILE NAME: C:\Revit_Projects\86232-NGISB\dg172\Models\MEP\86232_E_jccashwell.rvt
REV/DATE: 5/2/2016 1:40:55 PM

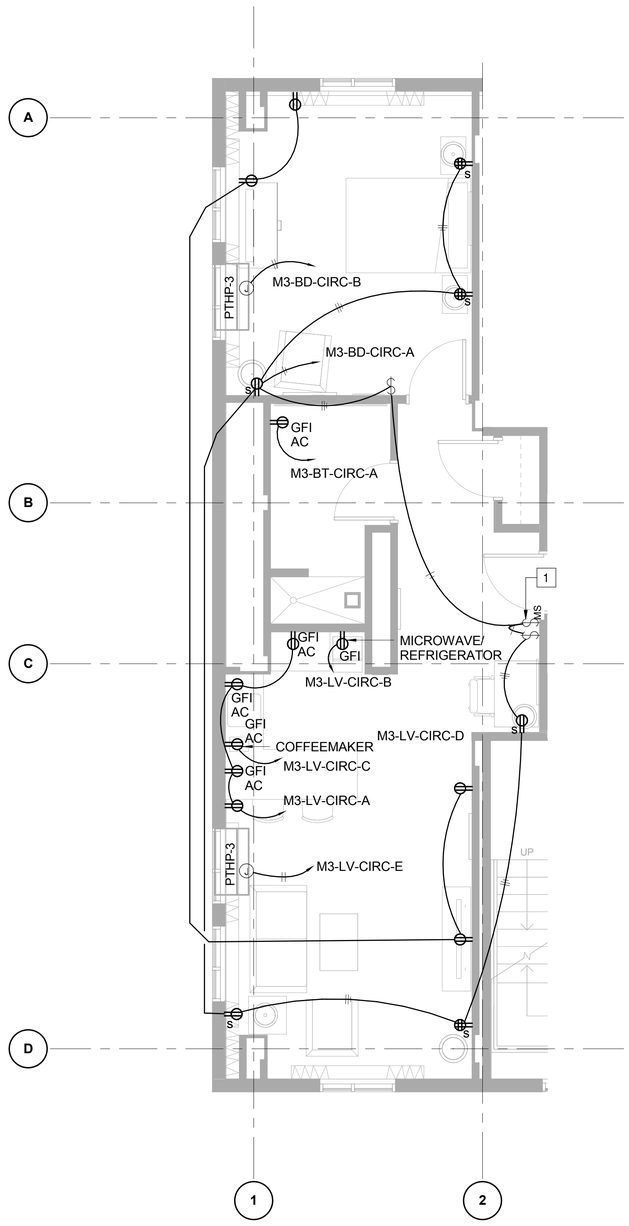

ENLARGED PLAN - TYPICAL MODULE 3
2ND THRU 4TH FLOOR - POWER

1 E-402 SCALE: 1/4" = 1'-0"

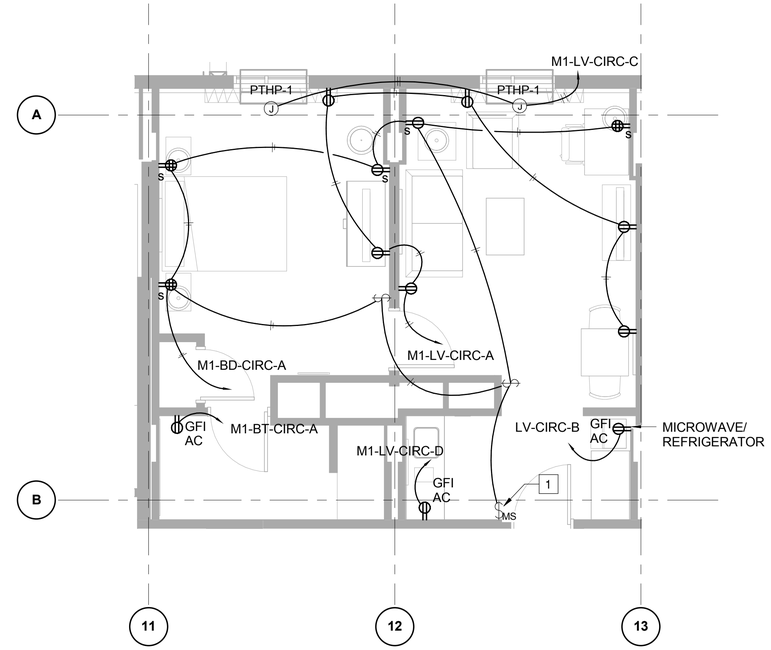

ENLARGED PLAN - TYPICAL MODULE 1
2ND THRU 4TH FLOOR - POWER

3 E-402 SCALE: 1/4" = 1'-0"

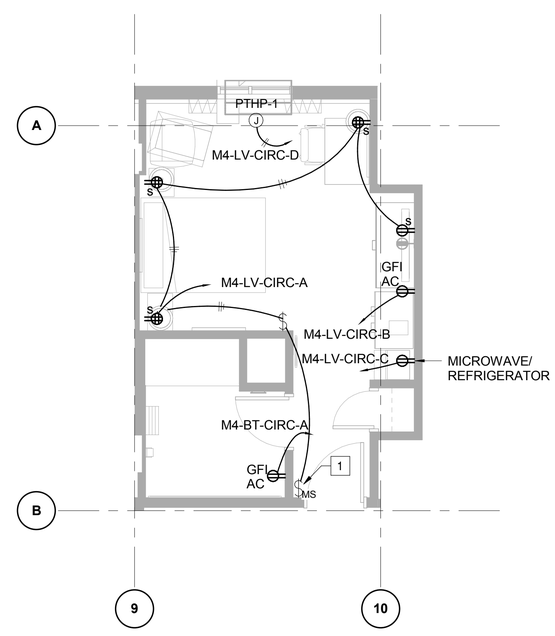

ENLARGED PLAN - TYPICAL MODULE 4
2ND THRU 4TH FLOOR - POWER

2 E-402 SCALE: 1/4" = 1'-0"

GENERAL NOTES:

1. THIS SHEET SHALL READ IN CONJUNCTION WITH ALL OTHER CONTRACT DOCUMENTS.
2. DRAWINGS ARE BASED ON EXISTING BUILDING DOCUMENTS AND FIELD OBSERVATION. CONTRACTOR SHALL FIELD VERIFY EXISTING CONDITIONS PRIOR TO COMMENCMENT OF WORK.
3. SEE E-001 AND E-002 FOR ELECTRICAL LEGEND, ABBREVIATIONS AND GENERAL NOTES. SEE SHEET E-701 - E-704 FOR PANELBOARD SCHEDULES.

KEY NOTES:

1. PROVIDE 2-POLE, SINGLE-THROW ROOM MASTER OVERRIDE SWITCH TO CONTROL SPLIT WIRED RECEPTACLES IN GUEST ROOM SUITES AND ASSOCIATED LIGHTING CIRCUITS AS INDICATED ON E-403. SEE DETAIL D1 SHEET E-604 FOR WIRING DIAGRAM.

ELECTRICAL CIRCUIT DESCRIPTIONS

CIRCUIT ID	DESCRIPTION
M1-BD-CIRC-A	BEDROOM GENERAL RECEPTACLES
M1-BT-CIRC-A	BATH RECEPTACLE
M1-LV-CIRC-A	LIVING ROOM GENERAL RECPTACLES
M1-LV-CIRC-B	MICROWAVE/REFRIGERATOR
M1-LV-CIRC-C	ROOM AC UNIT
M1-LV-CIRC-D	SINK RECEPTACLE
M3-BD-CIRC-A	BEDROOM GENERAL RECEPTACLES
M3-BD-CIRC-B	ROOM AC UNIT
M3-BT-CIRC-A	BATH RECEPTACLE
M3-LV-CIRC-A	SINK RECEPTACLE
M3-LV-CIRC-B	MICROWAVE/REFRIGERATOR
M3-LV-CIRC-C	COFFEE MAKER
M3-LV-CIRC-D	LIVING ROOM GENERAL RECPTACLES
M3-LV-CIRC-E	ROOM AC UNIT
M4-BT-CIRC-A	BATH RECEPTACLE
M4-LV-CIRC-A	LIVING ROOM GENERAL RECPTACLES
M4-LV-CIRC-B	COFFEE MAKER
M4-LV-CIRC-C	MICROWAVE/REFRIGERATOR
M4-LV-CIRC-D	ROOM AC UNIT

SYM	DESCRIPTION	DATE	APPR

NAVFAC

COMMONWEALTH OF VIRGINIA
JUSTIN C. CASHWELL
Lic. No.047237
5/4/16
PROFESSIONAL ENGINEER
SEAL

BURNS McDONNELL
1305 EXECUTIVE BLVD.
SUITE 160
CHESAPEAKE, VA 23320
A/E INFO.

APPROVED
FOR COMMANDER NAVFAC / B.L.T.L.

ACTIVITY
PER SAT-T0 DOCUMENT FROM GERARD MONTANI (PM&BRANCH HEAD) WITH FEAD AT NAVAL STATION NEWPORT-NEWPORT, RI

SATISFACTORY TO DATE 4/20/16

DES	DRW	CHK
JCC	LAW	KMS

PM / DM MLW/LEJ
BRANCH MANAGER
CHIEF ENG/ARCH DWG
FIRE PROTECTION

DEPARTMENT OF THE NAVY
NAVAL FACILITIES ENGINEERING COMMAND
NORTH IPT
NAVAL FACILITIES ENGINEERING COMMAND ~ MID-ATLANTIC
NAVAL STATION NEWPORT
NEWPORT, RHODE ISLAND
NEWPORT, RHODE ISLAND

RENOVATION OF NGIS, BUILDING 172

ENLARGED PLANS

SCALE: AS NOTED
EPROJECT NO. 13770079
CONSTR. CONTR. NO.
NAVFAC DRAWING NO. 12719558
SHEET 173 OF 200

E-402

DRAWFORM REVISION: 10 MAY 2014

FILE NAME: C:\Revit_Projects\86232-NGISBldg172\Models\MEP\86232_E_jccashwell.rvt
REVDATE: 5/2/2016 1:40:57 PM

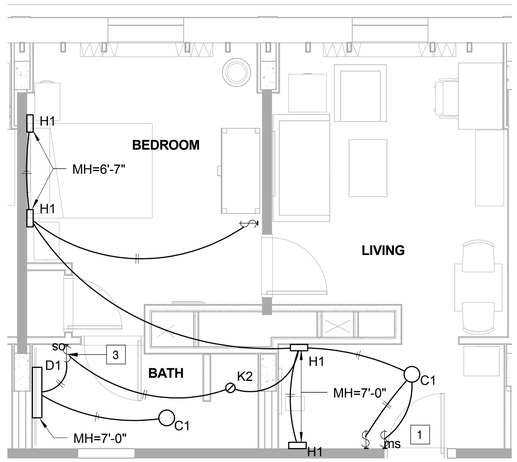

1 E-403 ENLARGED PLAN - TYPICAL MODULE 1 LIGHTING PLAN
SCALE: 1/4" = 1'-0"

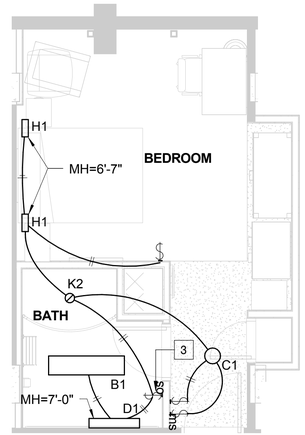

2 E-403 ENLARGED PLAN - TYPICAL MODULE 4 LIGHTING PLAN
SCALE: 1/4" = 1'-0"

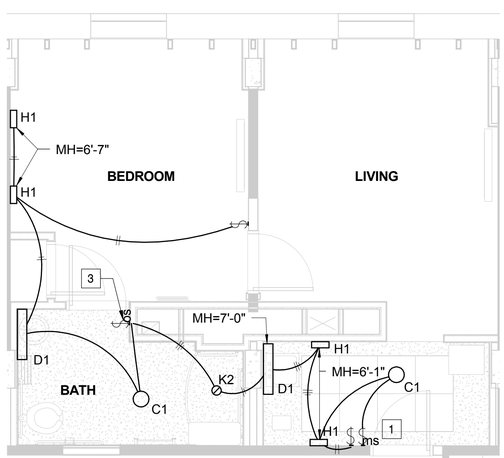

3 E-403 ENLARGED PLAN - TYPICAL MODULE 1 ABA LIGHTING PLAN
SCALE: 1/4" = 1'-0"

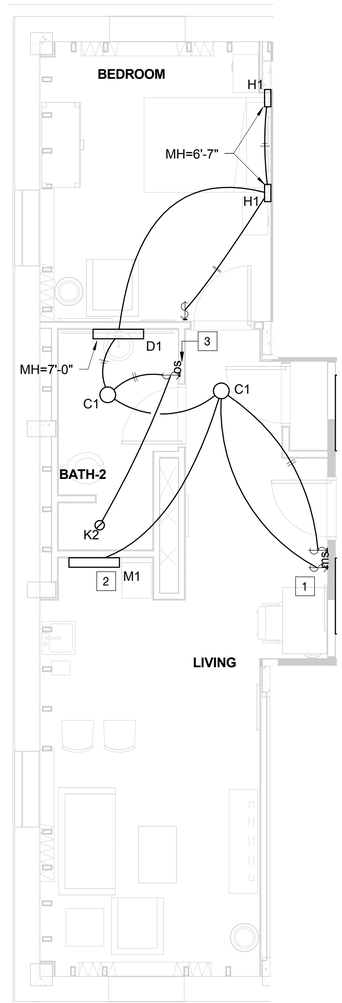

4 E-403 ENLARGED PLAN - TYPICAL MODULE 3 LIGHTING PLAN
SCALE: 1/4" = 1'-0"

GENERAL NOTES:

1. THIS SHEET SHALL READ IN CONJUNCTION WITH ALL OTHER CONTRACT DOCUMENTS.
2. DRAWINGS ARE BASED ON EXISTING BUILDING DOCUMENTS AND FIELD OBSERVATION. CONTRACTOR SHALL FIELD VERIFY EXISTING CONDITIONS PRIOR TO COMMENCMENT OF WORK.
3. SEE LIGHTING SEQUENCE OF OPERATIONS AND CONTROL SHEET E-002 AND LIGHTING CONTROL DIAGRAMS SHEET E-604 FOR MORE DETAIL.
4. TYPICAL LIGHTING LAYOUT FOR MODULE. LIGHTING LAYOUT SHOWS LIGHTING FIXTURE LOCATIONS, SWITCHING CONFIGURATION AND LIGHTING CONTROLS. SEE PLANS FOR PANEL AND CIRCUIT INFORMATION.

NEW WORK NOTES:

1. CONNECT LIGHTING CIRCUIT INTO MASTER OVERRIDE SWITCH. SEE E-401 AND E-402 FOR LOCATION OF MASTER OVERRIDE SWITCH. SEE E-604 FOR WIRING DIAGRAM.
2. MOUNT LIGHT FIXTURE TO UNDERSIDE OF CABINET.
3. PROVIDE DUAL RELAY COMBINATION OCCUPANCY SENSOR AND SWITCH. SEE DETAIL B1 SHEET E-604 FOR MORE DETAIL.

GRAPHIC SCALE:
1/4" =1'-0" 0' 2' 4' 8'

SYM	DESCRIPTION	DATE	APPR

NAVFAC

COMMONWEALTH OF VIRGINIA
JUSTIN C. CASHWELL
Lic. No.047237
5/4/16
PROFESSIONAL ENGINEER
SEAL

BURNS McDONNELL
1305 EXECUTIVE BLVD.
SUITE 160
CHESAPEAKE, VA 23320
A/E INFO

APPROVED
David W. Grunfeld
FOR COMMANDER NAVFAC / B.L.T.L.

ACTIVITY
PER SAT-TO DOCUMENT FROM GERARD MONTANI (PM&BRANCH HEAD) WITH FEAD AT NAVAL STATION NEWPORT, NEWPORT, RI

SATISFACTORY TO DATE 4/20/16

DES JCC	DRW LAW	CHK KMS
PM / DM	MLW/LEJ	
BRANCH MANAGER		
CHIEF ENG/ARCH	DWG	
FIRE PROTECTION		

DEPARTMENT OF THE NAVY
NAVAL FACILITIES ENGINEERING COMMAND
NAVAL FACILITIES ENGINEERING COMMAND ~ MID-ATLANTIC
NORTH IPT
NAVAL STATION NEWPORT
NEWPORT, RHODE ISLAND
RENOVATION OF NGIS, BUILDING 172
ENLARGED PLANS

SCALE: AS NOTED
EPROJECT NO. 13770079
CONSTR. CONTR. NO.
NAVFAC DRAWING NO. 12719559
SHEET 174 OF 200
E-403

DRAWFORM REVISION: 10 MAY 2014

FILE NAME: C:\Revit_Projects\86232-NGISBldg172\Models\MEP\86232_E_jccashwell.rvt
REVDATE: 5/2/2016 1:41:00 PM

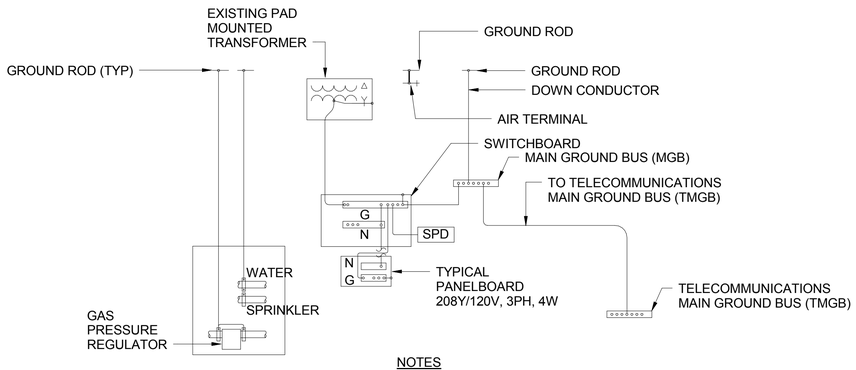

NOTES

1. SIZE ALL GROUND WIRES PER NEC.

C1 TYPICAL GROUNDING DETAIL

SCALE: NOT TO SCALE

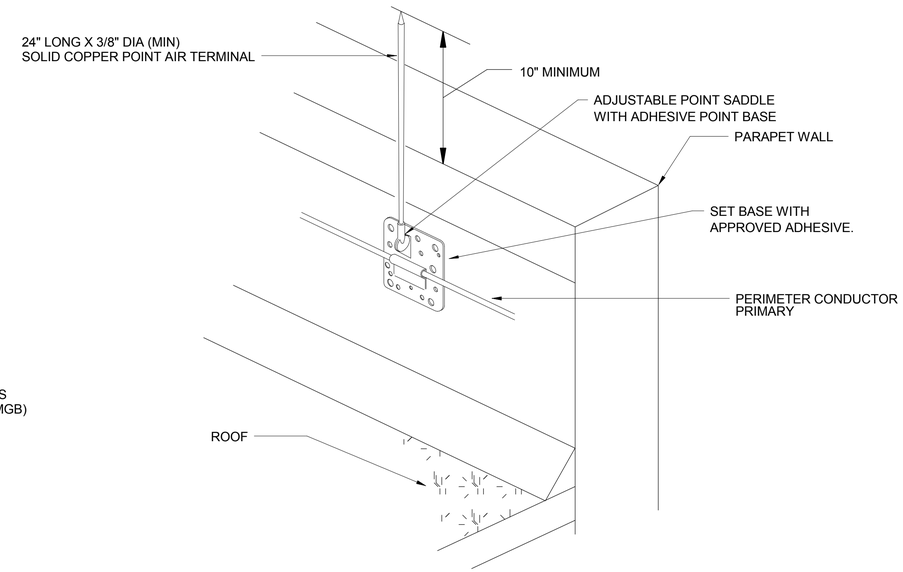

C3 TYPICAL AIR TERMINAL ON PARAPET

SCALE: NOT TO SCALE

SYM	DESCRIPTION	DATE	APPR

NAVFAC

COMMONWEALTH OF VIRGINIA
JUSTIN C. CASHWELL
Lic. No.047237
5/4/16
PROFESSIONAL ENGINEER
SEAL

BURNS McDONNELL
1305 EXECUTIVE BLVD.
SUITE 160
CHESAPEAKE, VA 23320
A/E INFO

APPROVED
David W. Grunfeld
FOR COMMANDER NAVFAC / B.L.T.L.

ACTIVITY
PER SAT-TO DOCUMENT FROM GERARD MONTANI (PM&BRANCH HEAD) WITH FEAD AT NAVAL STATION NEWPORT, NEWPORT, RI

SATISFACTORY TO DATE 4/20/16

DES JCC	DRW LAW	CHK KMS

PM / DM MLW/LEJ
BRANCH MANAGER
CHIEF ENG/ARCH DWG
FIRE PROTECTION

DEPARTMENT OF THE NAVY
NAVAL FACILITIES ENGINEERING COMMAND
NAVAL FACILITIES ENGINEERING COMMAND ~ MID-ATLANTIC
NORTH IPT
NAVAL STATION NEWPORT
NEWPORT, RHODE ISLAND

RENOVATION OF NGIS, BUILDING 172

GENERAL GROUNDING DETAILS

SCALE: AS NOTED
EPROJECT NO. 13770079
CONSTR. CONTR. NO.
NAVFAC DRAWING NO. 12719560
SHEET 175 OF 200

E-501

DRAWFORM REVISION: 10 MAY 2014

FILE NAME: C:\Revit_Projects\86232-NGISBld\g172Models\MEP\86232_E_jccashwell.rvt
REVDATE: 5/2/2016 1:41:01 PM

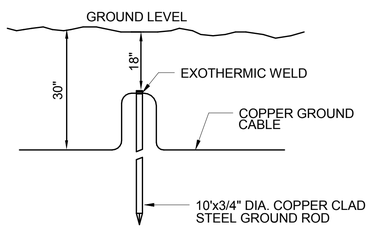

C1 TYPICAL GROUND ROD CONNECTION
SCALE: NOT TO SCALE

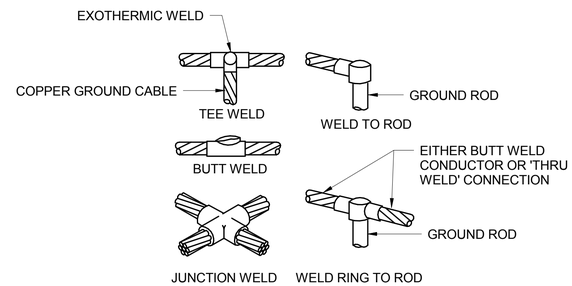

C2 TYPICAL EXOTHERMIC WELDS
SCALE: NOT TO SCALE

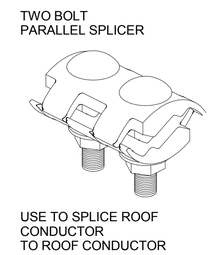

C3 CABLE SPLICE
SCALE: NOT TO SCALE

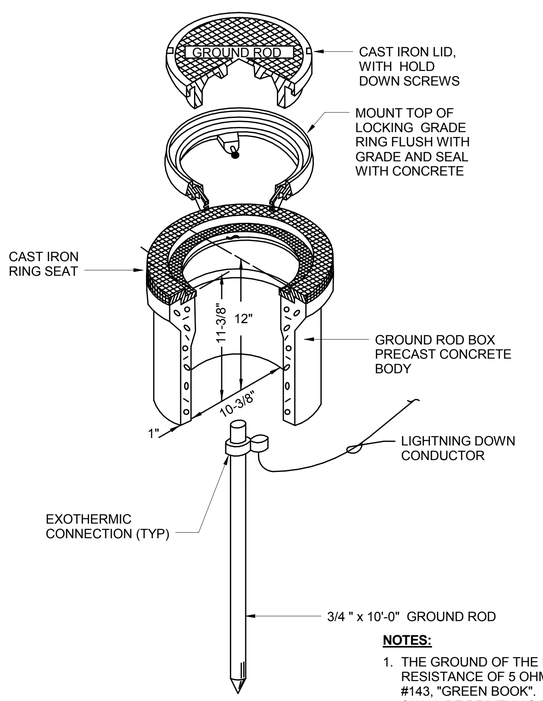

NOTES:

1. THE GROUND OF THE FACILITY SHALL HAVE A RESISTANCE OF 5 OHMS OR LESS PER IEEE STANDARD #143, "GREEN BOOK". ADDITIONAL GROUND RODS SHALL BE DRIVEN AS REQUIRED TO ACHIEVE THE PROPER RESISTANCE.

A1 TYPICAL GROUND TEST WELL
SCALE: NOT TO SCALE

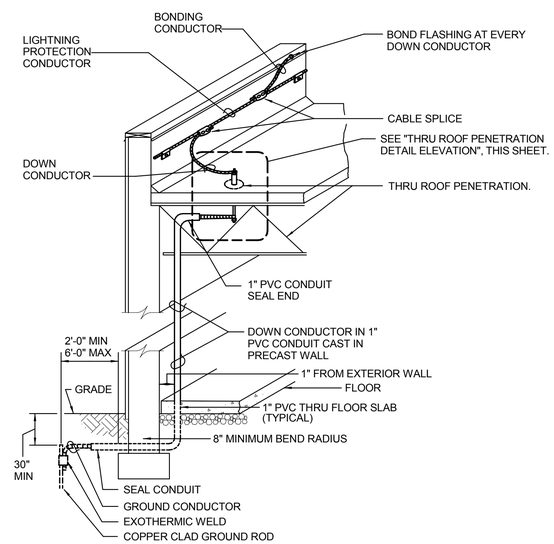

A2 TYPICAL DOWN CONDUCTOR ROUTING DETAIL
SCALE: NOT TO SCALE

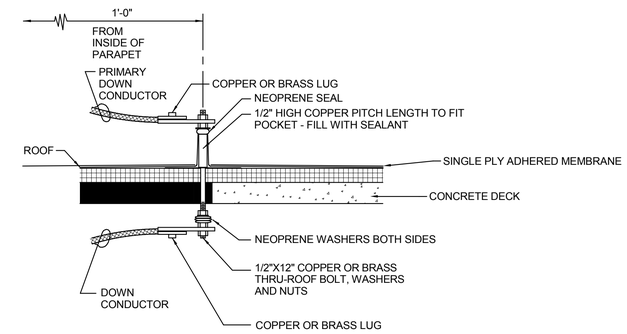

B4 THRU ROOF PENETRATION DETAIL
SCALE: NOT TO SCALE

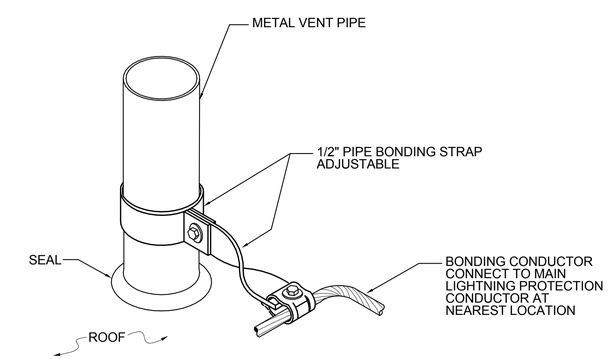

A4 TYPICAL VENT PIPE BONDING DETAIL
SCALE: NOT TO SCALE

SYM	DESCRIPTION	DATE	APPR

NAVFAC

COMMONWEALTH OF VIRGINIA
JUSTIN C. CASHWELL
Lic. No.047237
5/4/16
PROFESSIONAL ENGINEER
SEAL

BURNS McDONNELL
1305 EXECUTIVE BLVD.
SUITE 160
CHESAPEAKE, VA 23320
A/E INFO

APPROVED
FOR COMMANDER NAVFAC / B.L.T.L.

ACTIVITY
PER SAT-TO DOCUMENT FROM GERARD MONTANI (PM&BRANCH HEAD) WITH FEAD AT NAVAL STATION NEWPORT-NEWPORT, RI

SATISFACTORY TO DATE 4/20/16

DES	DRW	CHK
JCC	LAW	KMS

PM / DM MLW/LEJ
BRANCH MANAGER
CHIEF ENG/ARCH DWG
FIRE PROTECTION

DEPARTMENT OF THE NAVY
NAVAL FACILITIES ENGINEERING COMMAND
NORTH IPT
NAVAL FACILITIES ENGINEERING COMMAND ~ MID-ATLANTIC
NAVAL STATION NEWPORT
NEWPORT, RHODE ISLAND
NEWPORT, RHODE ISLAND

RENOVATION OF NGIS, BUILDING 172

GROUNDING DETAILS

SCALE: AS NOTED
EPROJECT NO. 13770079
CONSTR. CONTR. NO.
NAVFAC DRAWING NO. 12719561
SHEET 176 OF 200

E-502

DRAWFORM REVISION: 10 MAY 2014

FILE NAME: C:\Revit_Projects\86232-NGISBldg172\Models\MEP\86232_E_jccashwell.rvt
REVDATE: 5/2/2016 1:41:02 PM

BREAKER AND FEEDER SCHEDULE				
ID	PARALLEL SETS	FEEDER SIZE	CONDUIT	TRIP RATING
1	2	(4) - 750KCMIL, (1) #1/0 GND	EXISTING	1000 A
2	2	(4) - #3/0, (1) #3 GND	2.0"	400 A
3	1	(4) - #3/0, (1) #6 GND	2.0"	150 A
4	1	(4) - #2, (1) #8 GND	1.5"	100 A
5	1	(3) - #1/0, (1) #6, GND	1.0"	150 A
6	2	(4) - #4/0, (1) #2 GND	2.0"	450 A
7	1	(4) - #4/0, (1) #6 GND	2.0"	200 A

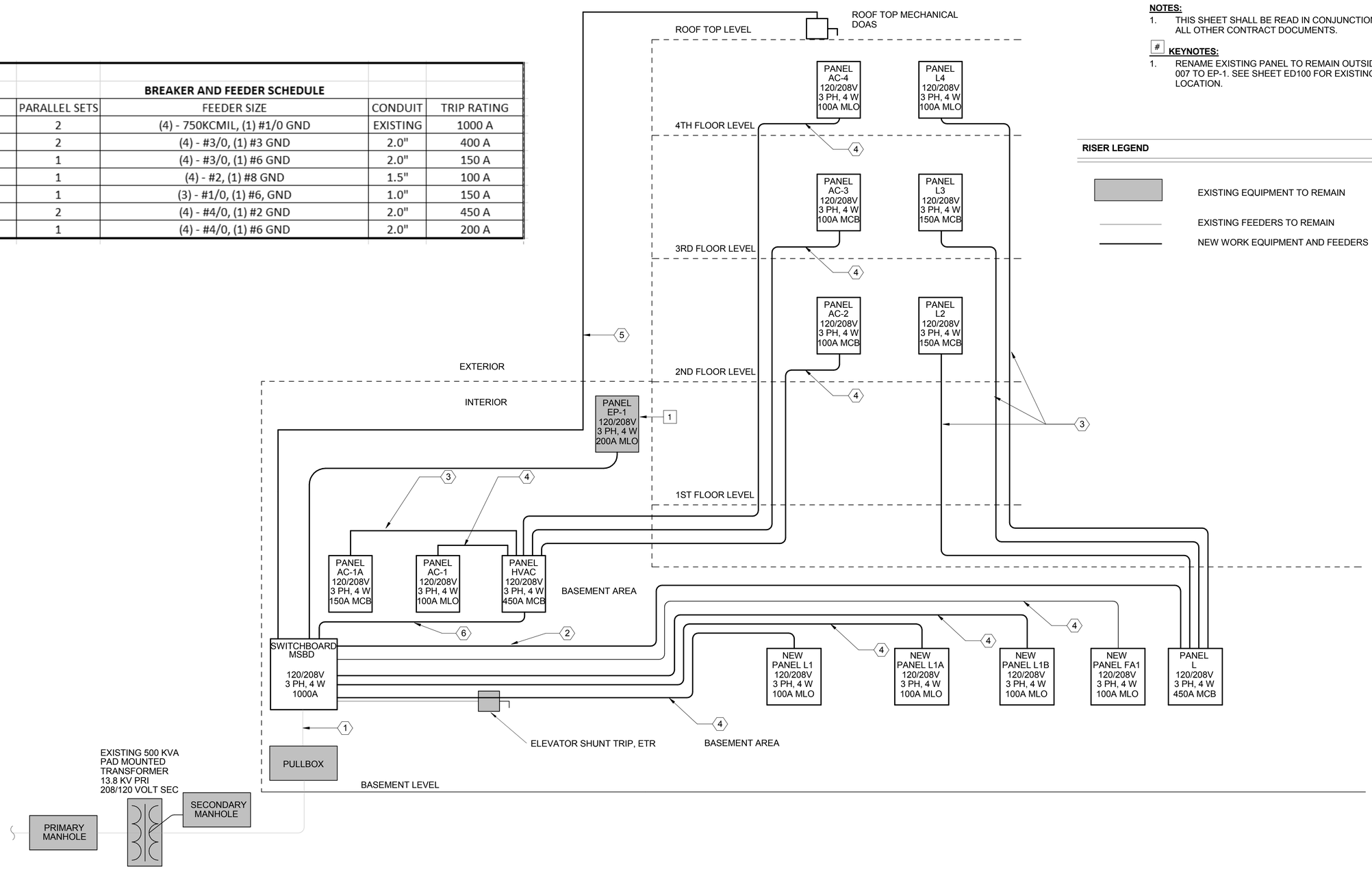

ELECTRICAL RISER

SCALE: NOT TO SCALE

NOTES:

1. THIS SHEET SHALL BE READ IN CONJUNCTION WITH ALL OTHER CONTRACT DOCUMENTS.

 # KEYNOTES:

1. RENAME EXISTING PANEL TO REMAIN OUTSIDE ROOM 007 TO EP-1. SEE SHEET ED100 FOR EXISTING PANEL LOCATION.

RISER LEGEND

- EXISTING EQUIPMENT TO REMAIN
- EXISTING FEEDERS TO REMAIN
- NEW WORK EQUIPMENT AND FEEDERS

SYM	DESCRIPTION	DATE	APPR

NAVFAC

COMMONWEALTH OF VIRGINIA
JUSTIN C. CASHWELL
Lic. No.047237
5/4/16
PROFESSIONAL ENGINEER
SEAL

BURNS McDONNELL
1305 EXECUTIVE BLVD.
SUITE 160
CHESAPEAKE, VA 23320
A/E INFO

APPROVED
Daniel W. Grunfeld
FOR COMMANDER NAVFAC / B.L.T.L.

ACTIVITY
PER SAT-TO DOCUMENT FROM GERARD MONTANI (PM&BRANCH HEAD) WITH FEAD AT NAVAL STATION NEWPORT-NEWPORT, RI

SATISFACTORY TO DATE 4/20/16

DES JCC	DRW LAW	CHK KMS
PM / DM	MLW/LEJ	
BRANCH MANAGER		
CHIEF ENG/ARCH	DWG	
FIRE PROTECTION		

DEPARTMENT OF THE NAVY
NAVAL FACILITIES ENGINEERING COMMAND
NORTH IPT
NAVAL FACILITIES ENGINEERING COMMAND ~ MID-ATLANTIC
NAVAL STATION NEWPORT
NEWPORT, RHODE ISLAND
RENOVATION OF NGIS, BUILDING 172
ELECTRICAL NEW WORK - RISER DIAGRAM

SCALE: AS NOTED
EPROJECT NO. 13770079
CONSTR. CONTR. NO.
NAVFAC DRAWING NO. 12719562
SHEET 177 OF 200
E-601

DRAWFORM REVISION: 10 MAY 2014

FILE NAME: C:\Revit_Projects\86232-NGISBldg172\Models\MEP86232_E_jccashwell.rvt
REV/DATE: 5/2/2016 1:41:03 PM

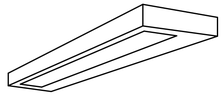

LUMINAIRE REQUIREMENTS:

1. HOUSING - 20 GAUGE FORMED STEEL HOUSING. ADJUSTABLE FOR EASY LEVELING.
2. FINISH - ELECTROSTATICALLY APPLIED POWDER COATED FINISH.
3. LENS - 100% ACRYLIC, FROSTED
4. ELECTRONIC DRIVER - IES LM-80 PERFORMANCE FOR 60,000 HOURS MINIMUM. SOUND RATING "A" WITH LESS THAN 20% THD, MINIMUM 0.9 POWER FACTOR, INHERENT THERMAL PROTECTION, SHORT-CIRCUIT AND OVERLOAD PROTECTION, AND COMPLIES WITH ANSI C62.41 CATEGORY A TRANSIENT PROTECTION. PROVIDE 0-10V DIMMING DRIVER FOR 5-100% DIMMING RANGE OR BI-LEVEL STEP-DIMMING IF INDICATED.
5. CERTIFICATION - UL LISTED AND LABELED
6. OPTICS - 73% UP AND 27% DOWN COMPONENTS
7. PHOTOMETRICS - MINIMUM VALUE OF COEFFICIENT OF UTILIZATION (CU), GIVEN INTERIOR CAVITY REFLECTANCES OF 80-50-20:
7. OPTIONS - EMERGENCY BATTERY PACK. (TYPE AE)

TYPE A1
NOMINAL 24W INPUT/
2,800 LUMENS

RCR	CU
1	0.92
2	0.83
3	0.76
4	0.69

LPW - 116
MINIMUM

LED WALL DIRECT/INDIRECT

REVISED: JANUARY 2014 | LIGHTING PLATE: | TYPE: A1, AE

LUMINAIRE REQUIREMENTS:

1. HOUSING - COLD GAUGE METAL HOUSING. HIGH IMPACT POLYMER PLASTIC END CAPS.
2. FINISH - STEEL REFLECTOR WITH MULTI-STAGE PHOSPHATE BONDING TREATMENT FINISHED WITH HIGH REFLECTANCE (MINIMUM 85%), BAKED WHITE ENAMEL FINISH.
3. LENS - 100% CLEAR ACRYLIC OPTICAL DIFFUSER.
4. ELECTRONIC DRIVER - IES L80 PERFORMANCE FOR 50,000 HOURS MINIMUM. SOUND RATING "A" WITH LESS THAN 20% THD, MINIMUM 0.9 POWER FACTOR, INHERENT THERMAL PROTECTION, SHORT-CIRCUIT AND OVERLOAD PROTECTION, AND COMPLIES WITH ANSI C62.41 CATEGORY A TRANSIENT PROTECTION.
5. CERTIFICATION - UL LISTED.
6. PHOTOMETRICS - MINIMUM VALUE OF COEFFICIENT OF UTILIZATION (CU), GIVEN INTERIOR CAVITY REFLECTANCES OF 80-50-20:

TYPE B1
NOMINAL 45W INPUT/
4,390 LUMENS

RCR	CU
1	1.07
2	0.97
3	0.88
4	0.81

LPW - 97
MINIMUM

LED WRAPAROUND

REVISED: JANUARY 2014 | LIGHTING PLATE: | TYPE: B1

LIGHTING FIXTURE SCHEDULE

FIXTURE SYMBOL	LIGHTING PLATE No.	LAMP TYPE	VOLTAGE	MOUNTING	NOTES
A1	A1	LED	120 V	SURFACE, WALL	1,4
AE	AE	LED	120 V	SURFACE, WALL	4,5
B1	B1	LED	120 V	SURFACE	4
B2	B2	LED	120 V	SURFACE	4
C1	C1	LED	120 V	CEILING, SURFACE	4
D1	D1	LED	120 V	SURFACE, WALL	4
E1	E1	LED	120 V	CEILING, RECESSED	1,4
EE	EE	LED	120 V	CEILING, RECESSED	4,5
F1	F1	LED	120 V	SURFACE, WALL	4,5
F2	F2	LED	120 V	SURFACE, WALL	4,5
G1	G1	LED	120 V	CEILING, SURFACE	1
G2	G2	LED	120 V	CEILING, SURFACE	1
G3	G3	LED	120 V	CEILING, SURFACE	1
H1	H1	LED	120 V	SURFACE, WALL	4
J1	J1	LED	120 V	CEILING,PENDANT	4
J2	J2	LED	120 V	CEILING,PENDANT	4
K2	K2	LED	120 V	CEILING, RECESSED	2,4
K3E	K3E	LED	120 V	CEILING, RECESSED	2,5
KE	KE	LED	120 V	CEILING, RECESSED	5
M1	M1	LED	120 V	SURFACE	
O1	O1	LED	120 V	SURFACE, WALL	2,5
X1	NL-64	LED	120 V	UNIVERSAL	3,4

NOTES:
1. PROVIDE STEP DIMMING BALLAST AS REQUIRED TO FACILITATE INDICATED LIGHTING CONTROLS.
2. UL WET LISTED.
3. PROVIDE DIRECTIONAL ARROWS FOR EXIT SIGNS WHERE INDICATED.
4. COORDINATE FINAL LOCATION AND MOUNTING HEIGHT WITH EQUIPMENT IN THE SPACE. COORDINATE WITH DIV. 23, 26 AND 27 AS APPLICABLE.
5. PROVIDE EMERGENCY BATTERY PACK.
6. PROVIDE FIXTURE WITH INTEGRAL PHOTOCELL

LUMINAIRE REQUIREMENTS:

1. HOUSING - DIE-FORMED STEEL
2. FINISH - PAINTED TO OFFER IDEAL AETHETICS
3. LENS - WHITE OPAL INJECTION MOLDED ACRYLIC
4. ELECTRONIC DRIVER - IES L80 PERFORMANCE FOR 50,000 HOURS MINIMUM. SOUND RATING "A" WITH LESS THAN 20% THD, MINIMUM 0.9 POWER FACTOR, INHERENT THERMAL PROTECTION, SHORT-CIRCUIT AND OVERLOAD PROTECTION, AND COMPLIES WITH ANSI C62.41 CATEGORY A TRANSIENT PROTECTION.
5. CERTIFICATION - UL LISTED AND LABELED
6. PHOTOMETRICS - MINIMUM VALUE OF COEFFICIENT OF UTILIZATION (CU), GIVEN INTERIOR CAVITY REFLECTANCES OF 80-50-20:

TYPE C1
NOMINAL 23W INPUT/
1,887 LUMENS

RCR	CU
1	1.04
2	0.94
3	0.86
4	0.78

LPW - 82
MINIMUM

16" LED DOME

REVISED: JANUARY 2014 | LIGHTING PLATE: | TYPE: C1

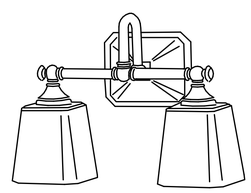

LUMINAIRE REQUIREMENTS:

1. FINISH - OIL RUBBED BRONZE
2. LENS - ETCHED CREAM GLASS.
3. DIMENSIONS - 10.25"H x 14"W x 6"D NOMINAL
4. LAMPS - PROVIDE WITH (2) A21/MEDIUM (E26) LED BULBS WITH A RATED OUTPUT OF 938 LUMENS EACH.
5. CERTIFICATION - UL LISTED AND LABELED FOR DAMP LOCATIONS

DECORATIVE VANITY

REVISED: JANUARY 2014 | LIGHTING PLATE: | TYPE: D1

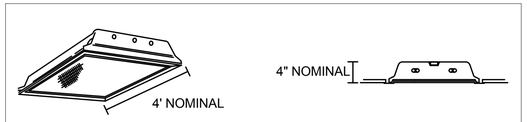

LUMINAIRE REQUIREMENTS:

1. HOUSING - DIE-FORMED, COLD-ROLLED STEEL. WITH REINFORCEMENT RIBS FOR ADDED RIGIDITY.
2. FINISH - MULTI-STAGE PHOSPHATE BONDING TREATMENT FINISHED WITH HIGH REFLECTANCE (MINIMUM 85%), BAKED WHITE ENAMEL FINISH.
3. LENS - 100% IMPACT MODIFIED ACRYLIC, #12 PATTERN MINIMUM OF 0.125" THICK
4. ELECTRONIC DRIVER - IES LM-80 PERFORMANCE FOR 60,000 HOURS MINIMUM. SOUND RATING "A" WITH LESS THAN 20% THD,MINIMUM 0.9 POWER FACTOR, INHERENT THERMAL PROTECTION, SHORT-CIRCUIT AND OVERLOAD PROTECTION, AND COMPLIES WITH ANSI C62.41 CATEGORY A TRANSIENT PROTECTION. PROVIDE 0-10V DIMMING DRIVER FOR 5-100% DIMMING RANGE OR BI-LEVEL STEP-DIMMING IF INDICATED.
5. CERTIFICATION - UL LISTED AND LABELED
6. MOUNTING - SHALL HAVE T-BAR CLIPS FOR MOUNTING TO STANDARD 15/16" AND 9/16" T-GRID CEILING SYSTEMS.
7. PHOTOMETRICS - MINIMUM VALUE OF COEFFICIENT OF UTILIZATION (CU), GIVEN INTERIOR CAVITY REFLECTANCES OF 80-50-20:
8. OPTION - EMERGENCY BATTERY PACK (TYPE EE)

TYPE E1
NOMINAL 40W INPUT/
4,800 LUMENS

RCR	CU
1	1.10
2	1.01
3	0.93
4	0.86

LPW - 120
MINIMUM

RECESSED
2' X 4' LED VOLUMETRIC TROFFER - T-GRID

REVISED: JANUARY 2014 | LIGHTING PLATE: | TYPE: E1, EE

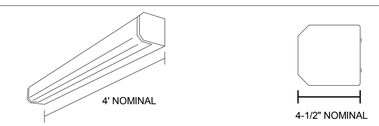

LUMINAIRE REQUIREMENTS:

1. HOUSING - ROLL-FORMED, COLD-ROLLED STEEL WITH OPAQUE INJECTION MOLDED END CAPS.
2. FINISH - HIGHLY REFLECTIVE POLYESTER POWDER COAT WITH SMOOTH, FINISHED EDGES
3. LENS - SMOOTH WHITE FROSTED ACRYLIC
4. ELECTRONIC DRIVER - IES LM-80 PERFORMANCE FOR 60,000 HOURS MINIMUM. SOUND RATING "A" WITH LESS THAN 20% THD, MINIMUM 0.9 POWER FACTOR, INHERENT THERMAL PROTECTION, SHORT-CIRCUIT AND OVERLOAD PROTECTION, AND COMPLIES WITH ANSI C62.41 CATEGORY A TRANSIENT PROTECTION. PROVIDE 0-10V DIMMING DRIVER FOR 5-100% DIMMING RANGE OR BI-LEVEL STEP-DIMMING IF INDICATED.
5. CERTIFICATION - UL LISTED AND LABELED
6. MOUNTING - SURFACE MOUNTED.
7. OPTIONS - LUMINAIRE SHALL HAVE AN INTEGRAL OCCUPANCY SENSOR AND EMERGENCY BATTERY PACK
8. PHOTOMETRICS - MINIMUM VALUE OF COEFFICIENT OF UTILIZATION (CU), GIVEN INTERIOR CAVITY REFLECTANCES OF 80-50-20:

TYPE F1
NOMINAL 43W INPUT/
4,000 LUMENS

RCR	CU
1	1.02
2	0.91
3	0.83
4	0.75

LPW - 93
MINIMUM

TYPE F2
NOMINAL 24W INPUT/
2,000 LUMENS

RCR	CU
1	1.02
2	0.91
3	0.83
4	0.75

LPW - 83
MINIMUM

4' LED STRIP WITH INTEGRAL OCCUPANCY SENSOR

REVISED: JANUARY 2014 | LIGHTING PLATE: | TYPE: F1, F2

SYM	DESCRIPTION	DATE	APPR

NAVFAC

COMMONWEALTH OF VIRGINIA
JUSTIN C. CASHWELL
Lic. No.047237
5/4/16
PROFESSIONAL ENGINEER
SEAL

BURNS McDONNELL
1305 EXECUTIVE BLVD.
SUITE 160
CHESAPEAKE, VA 23320
A/E INFO

APPROVED
David W. Grunfeld
FOR COMMANDER NAVFAC / B.L.T.L.

ACTIVITY
PER SAT-TO DOCUMENT FROM GERARD MONTANI (PM&BRANCH HEAD) WITH FEAD AT NAVAL STATION NEWPORT NEWPORT, RI

SATISFACTORY TO DATE 4/20/16

DES JCC | DRW LAW | CHK KMS
PM / DM MLW/LEJ
BRANCH MANAGER
CHIEF ENG/ARCH DWG
FIRE PROTECTION

DEPARTMENT OF THE NAVY
NAVAL FACILITIES ENGINEERING COMMAND
NORTH IPT
NAVAL FACILITIES ENGINEERING COMMAND ~ MID-ATLANTIC
NAVAL STATION NEWPORT
NEWPORT, RHODE ISLAND
NEWPORT, RHODE ISLAND

RENOVATION OF NGIS, BUILDING 172

LIGHTING FIXTURE SCHEDULE AND PLATES

SCALE: AS NOTED
EPROJECT NO. 13770079
CONSTR. CONTR. NO.
NAVFAC DRAWING NO. 12719563
SHEET 178 OF 200
E-602

DRAWFORM REVISION: 10 MAY 2014

FILE NAME: C:\Revit_Projects\86232-NGISB\dg172\Models\MEP\86232_E_jccashwell.rvt
REVDATE: 5/2/2016 1:41:04 PM

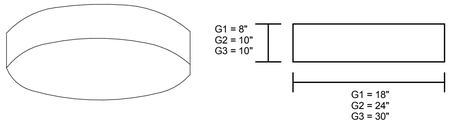

LUMINAIRE REQUIREMENTS:

1. FINISH - STANDARD LAMINATED FABRIC IN A NATURAL COLOR SHADE.
2. LENS - HIGH TRANSMISSION WHITE OPAL ACRYLIC
3. ELECTRONIC DRIVER - IES L80 PERFORMANCE FOR 50,000 HOURS MINIMUM. SOUND RATING "A" WITH LESS THAN 20% THD, MINIMUM 0.9 POWER FACTOR, INHERENT THERMAL PROTECTION, SHORT-CIRCUIT AND OVERLOAD PROTECTION, AND COMPLIES WITH ANSI C62.41 CATEGORY A TRANSIENT PROTECTION.
4. CERTIFICATION - UL LISTED AND LABELED
5. PHOTOMETRICS - MINIMUM VALUE OF COEFFICIENT OF UTILIZATION (CU), GIVEN INTERIOR CAVITY REFLECTANCES OF 80-50-20:

TYPE G1, G2, G3
NOMINAL 36W INPUT/
2,700 LUMENS

RCR	CU
1	0.79
2	0.72
3	0.66
4	0.61

LPW - 75
MINIMUM

LED ROUND DECORATIVE PENDANT

REVISED: JANUARY 2014 | LIGHTING PLATE: TYPE: G1, G2, G3

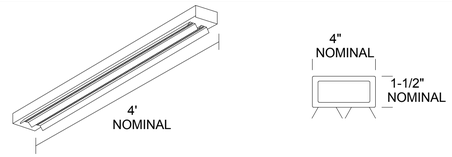

LUMINAIRE REQUIREMENTS:

1. HOUSING - CODE GUAGE STEEL. HOUSING COMPONENTS ACT AS HEAT SINK FOR LED HEAT DISSIPATION.
2. FINISH - MULTI-STAGE PHOSPHATE BONDING TREATMENT FINISHED WITH HIGH REFLECTANCE (MINIMUM 85%), BAKED WHITE ENAMEL FINISH.
3. REFLECTOR - MULTI FACETED SPECULAR ALUMINUM REFLECTOR FOR AISLE LIGHTING AND AREAS WHERE NARROW LIGHTING BEAM SPREAD IS DESIRED.
4. ELECTRONIC DRIVER - IES L80 PERFORMANCE FOR 50,000 HOURS MINIMUM. SOUND RATING "A" WITH LESS THAN 20% THD, MAXIMUM 530mA INPUT CURRENT, AT 120V, MINIMUM 0.9 POWER FACTOR, INHERENT THERMAL PROTECTION, SHORT-CIRCUIT AND OVERLOAD PROTECTION, AND COMPLIES WITH ANSI C62.41 CATEGORY A TRANSIENT PROTECTION. PROVIDE 0-10V DIMMING DRIVER FOR 5-100% DIMMING RANGE OR BI-LEVEL STEP-DIMMING IF INDICATED.
5. CERTIFICATION - UL LISTED AND LABELED
6. PHOTOMETRICS - MINIMUM VALUE OF COEFFICIENT OF UTILIZATION (CU) GIVEN INTERIOR CAVITY REFLECTANCES OF 80-50-20:

TYPE J1
NOMINAL 48W INPUT/
5,300 LUMENS

RCR	CU
1	1.11
2	1.02
3	0.95
4	0.87

LPW - 110
MINIMUM

TYPE J2
NOMINAL 25W INPUT/
2,700 LUMENS

RCR	CU
1	1.11
2	1.02
3	0.95
4	0.87

LPW - 108
MINIMUM

LED LOW BAY

REVISED: AUGUST 2004 | LIGHTING PLATE: TYPE: J1, J2

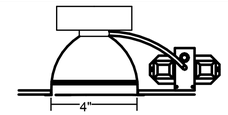

LUMINAIRE REQUIREMENTS:

1. HOUSING - 16 GUAGE GALVANIZED STEEL CONSTRUCTION WITH "DEAD FRONT" DESIGN. LIGHT ENGINE AND DRIVER SHALL BE ACCESSIBLE THROUGH APERATURE.
2. FINISH - MULTI-STAGE PHOSPHATE BONDING TREATMENT FINISHED WITH HIGH REFLECTANCE (MINIMUM 85%), BAKED WHITE ENAMEL FINISH.
3. LENS - 100% IMPACT MODIFIED ACRYLIC.
4. ELECTRONIC DRIVER - IES L80 PERFORMANCE FOR 50,000 HOURS MINIMUM. SOUND RATING "A" WITH LESS THAN 20% THD, MINIMUM 0.9 POWER FACTOR, INHERENT THERMAL PROTECTION, SHORT-CIRCUIT AND OVERLOAD PROTECTION, AND COMPLIES WITH ANSI C62.41 CATEGORY A TRANSIENT PROTECTION. PROVIDE 0-10V DIMMING DRIVER FOR 5-100% DIMMING RANGE OR BI-LEVEL STEP-DIMMING IF INDICATED.
5. CERTIFICATION - UL LISTED AND LABELED.
6. MOUNTING - TELESCOPIC MOUTNING BARS WITH A MAX CEILING THINKCNESS OF 1-1/2".
7. OPTIONS - EMERGENCY BATTERY PACK
8. PHOTOMETRICS - MINIMUM VALUE OF COEFFICIENT OF UTILIZATION (CU), GIVEN INTERIOR CAVITY REFLECTANCES OF 80-50-20:

TYPE KE
NOMINAL 10W INPUT/
850 LUMENS

RCR	CU
1	1.19
2	1.10
3	1.05
4	1.01

LPW - 85
MINIMUM

6" LED DOWNLIGHT

REVISED: JANUARY 2014 | LIGHTING PLATE: TYPE: KE

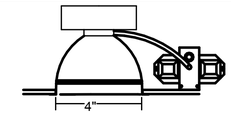

LUMINAIRE REQUIREMENTS:

1. HOUSING - 16 GUAGE GALVANIZED STEEL CONSTRUCTION WITH "DEAD FRONT" DESIGN. LIGHT ENGINE AND DRIVER SHALL BE ACCESSIBLE THROUGH APERATURE.
2. FINISH - MULTI-STAGE PHOSPHATE BONDING TREATMENT FINISHED WITH HIGH REFLECTANCE (MINIMUM 85%), BAKED WHITE ENAMEL FINISH.
3. LENS - 100% IMPACT MODIFIED ACRYLIC.
4. ELECTRONIC DRIVER - IES L80 PERFORMANCE FOR 50,000 HOURS MINIMUM. SOUND RATING "A" WITH LESS THAN 20% THD, MINIMUM 0.9 POWER FACTOR, INHERENT THERMAL PROTECTION, SHORT-CIRCUIT AND OVERLOAD PROTECTION, AND COMPLIES WITH ANSI C62.41 CATEGORY A TRANSIENT PROTECTION. PROVIDE 0-10V DIMMING DRIVER FOR 5-100% DIMMING RANGE OR BI-LEVEL STEP-DIMMING IF INDICATED.
5. CERTIFICATION - UL WET LISTED AND LABELED.
6. MOUNTING - TELESCOPIC MOUTNING BARS WITH A MAX CEILING THINKCNESS OF 1-1/2".
7. OPTIONS - PROVIDE WITH EMERGENCY BATTERY PACK. (TYPE K3E)
8. PHOTOMETRICS - MINIMUM VALUE OF COEFFICIENT OF UTILIZATION (CU), GIVEN INTERIOR CAVITY REFLECTANCES OF 80-50-20:

TYPE K2
NOMINAL 16W INPUT/
1,000 LUMENS

RCR	CU
1	1.09
2	1.00
3	0.92
4	0.85

LPW - 63
MINIMUM

TYPE K3E
NOMINAL 44W INPUT/
2,750 LUMENS

RCR	CU
1	1.09
2	1.00
3	0.92
4	0.85

LPW - 63
MINIMUM

6" WET LISTED LED DOWNLIGHT

REVISED: JANUARY 2014 | LIGHTING PLATE: TYPE: K2, K3E

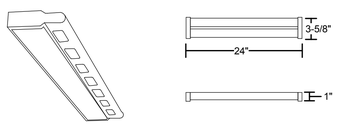

LUMINAIRE REQUIREMENTS:

1. HOUSING - RUGGED LOW PROFILE ALUMINUM HOUSING
2. FINISH - MULTI-STAGE PHOSPHATE BONDING TREATMENT FINISHED WITH HIGH REFLECTANCE (MINIMUM 85%), BAKED WHITE ENAMEL FINISH.
3. LENS - 100% UV STABALIZED ACRYLIC
4. ELECTRONIC DRIVER - IES LM-80 PERFORMANCE FOR 60,000 HOURS MINIMUM. SOUND RATING "A" WITH LESS THAN 20% THD, MINIMUM 0.9 POWER FACTOR, INHERENT THERMAL PROTECTION, SHORT-CIRCUIT AND OVERLOAD PROTECTION, AND COMPLIES WITH ANSI C62.41 CATEGORY A TRANSIENT PROTECTION. PROVIDE 0-10V DIMMING DRIVER FOR 5-100% DIMMING RANGE OR BI-LEVEL STEP-DIMMING IF INDICATED.
5. CERTIFICATION - UL LISTED AND LABELED
6. PHOTOMETRICS - MINIMUM VALUE OF COEFFICIENT OF UTILIZATION (CU) GIVEN INTERIOR CAVITY REFLECTANCES OF 80-50-20:

TYPE M1
NOMINAL 11W INPUT/
472 LUMENS

RCR	CU
1	1.10
2	1.00
3	0.92
4	0.84

LPW - 42
MINIMUM

2' LED UNDERCABINET

REVISED: JANUARY 2014 | LIGHTING PLATE: TYPE: M1

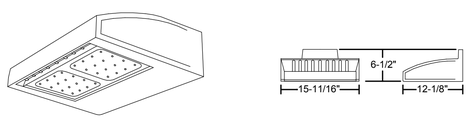

LUMINAIRE REQUIREMENTS:

1. HOUSING - DIE-CAST ALUMINUM WITH INTEGRAL HEAT SINKS.
2. FINISH - TGIC POLYESTER POWDER COAT, BRONZE.
3. OPTICS - DESIGNED TO SHAPE DISTRIBUTION AND MAXIMIZE EFFICIENCY.
4. ELECTRONIC DRIVER - IES LM-80 PERFORMANCE FOR 60,000 HOURS MINIMUM. SOUND RATING "A" WITH LESS THAN 20% THD, MINIMUM 0.9 POWER FACTOR, INHERENT THERMAL PROTECTION, SHORT-CIRCUIT AND OVERLOAD PROTECTION, AND COMPLIES WITH ANSI C62.41 CATEGORY A TRANSIENT PROTECTION.
5. CERTIFICATION - UL LISTED AND LABELED. IP66.
6. PHOTOMETRICS:

TYPE O1
NOMINAL 22W INPUT/
1,800 LUMENS
B0-U0-G1
TYPE II MEDIUM DISTRIBUTION
LPW - 81 MINIMUM

LED EXTERIOR WALL PACK

REVISED: JANUARY 2014 | LIGHTING PLATE: TYPE: O1

LUMINAIRE REQUIREMENTS:

1. HOUSING/TRIM - EXTRUDED ALUMINUM WITH OPTIONAL FINISHES OF SATIN ALUMINUM, WHITE, BLACK, BRASS, BRONZE OR CHROME.
2. PLAQUE - WATER-CLEAR INJECTION-MOLDED ACRYLIC. OPTIONAL MIRROR BACKGROUND ON SINGLE FACE MODELS; STANDARD ON DOUBLE-FACED MODELS.
3. LETTERS/CHEVRONS - MINIMUM 6" HIGH WITH 3/4" STROKE. RED OR GREEN LETTERS AS INDICATED. PROVIDE CHEVRONS AS INDICATED EITHER LEFT, RIGHT OR BOTH DIRECTIONS AS INDICATED.
4. EMERGENCY PACK - SOLID-STATE, CONSTANT-CURRENT TYPE BATTERY CHARGER WITH MAINTENANCE-FREE, NICKEL-CADMIUM BATTERY, AC-ON INDICATOR LAMP AND TEST SWITCH.
5. MOUNTING - UNIVERSAL MOUNTING KIT FOR CEILING, WALL OR END OF FIXTURE MOUNTING.
6. ILLUMINATION - PROVIDED BY RED OR GREEN HIGH-OUTPUT LEDS IN TOP HOUSING. RATED LIFE SHALL BE IN EXCESS OF 20 YEARS.
7. CERTIFICATION - UL LISTED AND LABELED.

EDGE-LIT EXIT SIGN

REVISED: AUGUST 2004 | LIGHTING PLATE: NL-64 | TYPE: X1

SYM	DESCRIPTION	DATE	APPR

NAVFAC

COMMONWEALTH OF VIRGINIA
JUSTIN C. CASHWELL
Lic. No.047237
5/4/16
PROFESSIONAL ENGINEER
SEAL

BURNS McDONNELL
1305 EXECUTIVE BLVD.
SUITE 160
CHESAPEAKE, VA 23320
A/E INFO

APPROVED
David W. Trumfield
FOR COMMANDER NAVFAC / B.L.T.L.

ACTIVITY
PER SAT-TO DOCUMENT FROM GERARD MONTANI (PM&BRANCH HEAD) WITH FEAD AT NAVAL STATION NEWPORT, NEWPORT, RI

SATISFACTORY TO DATE 4/20/16

DES JCC	DRW LAW	CHK KMS
PM / DM	MLW/LEJ	
BRANCH MANAGER		
CHIEF ENG/ARCH	DWG	
FIRE PROTECTION		

DEPARTMENT OF THE NAVY
NAVAL FACILITIES ENGINEERING COMMAND
NORTH IPT
NAVAL FACILITIES ENGINEERING COMMAND ~ MID-ATLANTIC
NAVAL STATION NEWPORT
NEWPORT, RHODE ISLAND
RENOVATION OF NGIS, BUILDING 172
LIGHTING PLATES

SCALE: AS NOTED
EPROJECT NO. 13770079
CONSTR. CONTR. NO.
NAVFAC DRAWING NO. 12719564
SHEET 179 OF 200
E-603

DRAWFORM REVISION: 10 MAY 2014

FILE NAME: C:\Revit_Projects\86232-NGISBldg172\Models\MEP\86232_E_jccashwell.rvt
REVDATE: 5/2/2016 1:41:05 PM

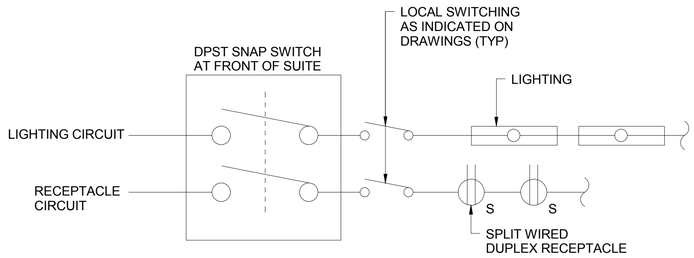

D1 TYPICAL SUITE MASTER CONTROL DIAGRAM1

SCALE: NOT TO SCALE

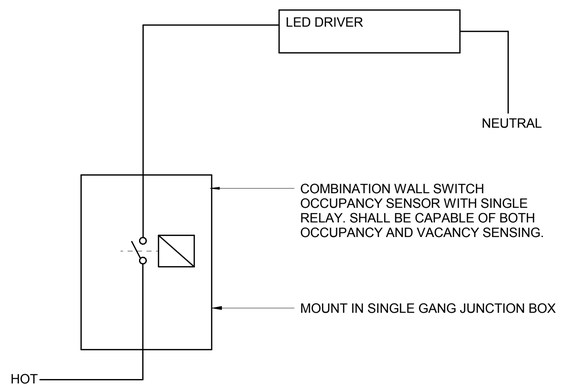

B1 TYPICAL SINGLE RELAY VACANCY/OCCUPANCY CONTROL DIAGRAM

SCALE: NOT TO SCALE

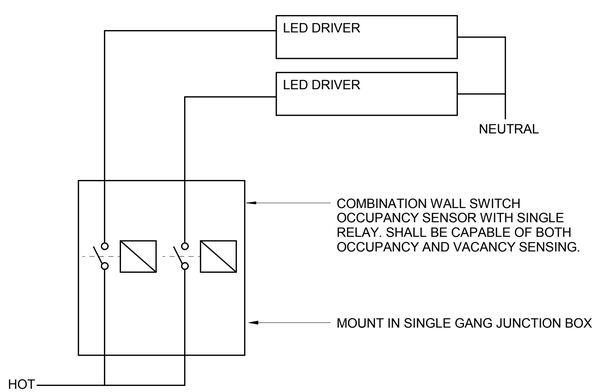

A1 TYPICAL DUAL RELAY VACANCY/OCCUPANCY CONTROL DIAGRAM

SCALE: NOT TO SCALE

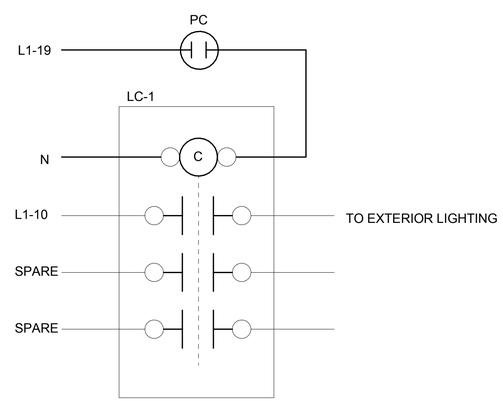

A2 PHOTO CELL LIGHTING CONTACTOR DIAGRAM

SCALE: NOT TO SCALE

SYM	DESCRIPTION	DATE	APPR

NAVFAC

COMMONWEALTH OF VIRGINIA
JUSTIN C. CASHWELL
Lic. No.047237
5/4/16
PROFESSIONAL ENGINEER
SEAL

BURNS McDONNELL
1305 EXECUTIVE BLVD.
SUITE 160
CHESAPEAKE, VA 23320
A/E INFO

APPROVED
David W. Greenfield
FOR COMMANDER NAVFAC / B.L.T.L.

ACTIVITY
PER SAT-TO DOCUMENT FROM GERARD MONTANI (PM&BRANCH HEAD) WITH FEAD AT NAVAL STATION NEWPORT, NEWPORT, RI

SATISFACTORY TO DATE 4/20/16

DES JCC	DRW LAW	CHK KMS

PM / DM MLW/LEJ
BRANCH MANAGER
CHIEF ENG/ARCH DWG
FIRE PROTECTION

DEPARTMENT OF THE NAVY
NAVAL FACILITIES ENGINEERING COMMAND
NAVAL FACILITIES ENGINEERING COMMAND ~ MID-ATLANTIC
NORTH IPT
NEWPORT, RHODE ISLAND
NAVAL STATION NEWPORT
RENOVATION OF NGIS, BUILDING 172
LIGHTING CONTROL DIAGRAMS

SCALE: AS NOTED
EPROJECT NO. 13770079
CONSTR. CONTR. NO.
NAVFAC DRAWING NO. 12719565
SHEET 180 OF 200
E-604

DRAWFORM REVISION: 10 MAY 2014

FILE NAME: C:\Revit_Projects\86232-NGISBldg172Models\MEP\86232_E_jccashwell.rvt
REVDATE: 5/2/2016 1:41:06 PM

SWITCHBOARD: SWBD MSBD

LOCATION: ELECTRICAL RM 003
SUPPLY FROM:
MOUNTING: FLOOR
ENCLOSURE: NEMA 1
VOLTAGE: 120/208 Wye
PHASES: 3
WIRES: 4
A.I.C. RATING: 65000
MAINS TYPE: MCB
MAINS RATING: 1000 A
MCB RATING: 1000 A

NOTES:

CKT	LOAD NAME		POLES	TRIP RATING	FRAME SIZE	Load	COMMENTS
1	L1		3	100 A	400 A	65 A	
2	L1A		3	100 A	400 A	80 A	
3	L1B		3	100 A	400 A	24 A	
4	L		3	450 A	600 A	540 A	
5	HVAC		3	450 A	600 A	426 A	
6	DOAS ROOF		3	150 A	400 A	97 A	
7	Elevator ELEVATOR...		3	150 A	400 A	92 A	
8	PNL EP-1		3	200 A	400 A	0 A	
9	FA1		3	100 A	400 A	3 A	RED LOCKABLE CIRCUIT BREAKER
10	SPACE		--	--	--	0 A	--
11	SPACE		--	--	--	0 A	--
12	SPACE		--	--	--	0 A	--

LOAD CLASSIFICATION	CONNECTED LOAD	DEMAND FACTOR	ESTIMATED...	SWITCHBOARD TOTALS	
Electric Clothes Dryer	30000 VA	65.00%	19500 VA		
HVAC	160123 VA	75.00%	120092 VA	TOTAL CONNECTED LOAD:	478155 VA
HVAC - Heating	600 VA	80.00%	480 VA	TOTAL ESTIMATED DEMAND LOAD:	269048 VA
LIGHTING	110 VA	125.00%	138 VA	TOTAL CONNECTED CURRENT:	1327 A
LTG	15240 VA	50.00%	7620 VA	TOTAL ESTIMATED DEMAND CURRENT:	747 A
Appliance - Dwelling Unit	6600 VA	90.00%	5940 VA		
Elevator	33212 VA	100.00%	33212 VA	DEMAND WITH EXPANSION:	896 A
Receptacle (Hotel)	231720 VA	35.18%	81516 VA		

PANELBOARD: HVAC

LOCATION: MECHANICAL 005
SUPPLY FROM: SWBD MSBD
MOUNTING: SURFACE
ENCLOSURE: NEMA 1
VOLTAGE: 120/208 Wye
PHASE: 3
WIRES: 4
A.I.C. RATING: 65000
MAINS TYPE: MCB
MAINS RATING: 600 A
MCB RATING: 400 A

#	BKR	P	*	LOAD SERVED	WIRE AND CONDUIT	A		B		C		WIRE AND CONDUIT	LOAD SERVED	*	P	BKR	#
1						78 A	45 A										2
3	100	3		AC1	3-#2, 1-#2, 1-#8 - 2"C			74 A	56 A			3-#2, 1-#2, 1-#8 - 2"C	AC2		3	100	4
5										65 A	51 A						6
7						47 A	74 A										8
9	100	3		AC3	3-#2, 1-#2, 1-#8 - 2"C			54 A	86 A			3-#2, 1-#2, 1-#8 - 2"C	AC4		3	100	10
11										47 A	61 A						12
13						7 A	136 A										14
15								7 A	156 A			3-#1/0, 1-#1/0, 1-#6 - 1-1/4"C	AC-1A		3	150	16
17	20	2		HVAC BEDROOM 211-1B	2-#12, 1-#12 - 3/4"C					6 A	135 A						18
19						6 A	7 A										20
21	20	2		HVAC BEDROOM 200-3B	2-#12, 1-#12 - 3/4"C			7 A	7 A			2-#12, 1-#12 - 3/4"C	HVAC LIVING 211-1A		2	20	22
23										7 A	6 A						24
25	20	2		HVAC BEDROOM-2 311-1B-2	2-#12, 1-#12 - 3/4"C	6 A	6 A					2-#12, 1-#12 - 3/4"C	HVAC LIVING 200-3A		2	20	26
27								6 A	7 A								28
29	20	1	--	SPARE	--					0 A	7 A	2-#12, 1-#12 - 3/4"C	HVAC LIVING 311-1A		2	20	30
31	20	1	--	SPARE	--	0 A	6 A										32
33	20	1	--	SPARE	--			0 A	6 A			2-#12, 1-#12 - 3/4"C	HVAC BEDROOM 300-3B		2	20	34
35	20	1	--	SPARE	--					0 A	0 A	--	SPARE	--	1	20	36
37	20	2		HVAC LIVING 111-3A	2-#12, 1-#12 - 3/4"C	7 A	0 A					--	SPARE	--	1	20	38
39								7 A	7 A			2-#12, 1-#12 - 3/4"C	HVAC BEDROOM 111-1B		2	20	40
41	20	1	--	SPARE	--					0 A	7 A						42
					TOTAL LOAD:	50239 VA		56723 VA		46518 VA							
					TOTAL AMPS:	423 A		477 A		388 A							

*** CB TYPE:**
A AFCI
G GFCI
L LOCKABLE
R RED HANDLE

NOTES:

LOAD CLASSIFICATION	CONNECTED LOAD	DEMAND FACTOR	ESTIMATED DEMAND	PANEL TOTALS	
Other	0 VA	0.00%	0 VA		
HVAC	114599 VA	75.00%	85949 VA	TOTAL CONNECTED LOAD:	153479 VA
Receptacle (Hotel)	1680 VA	50.00%	840 VA	TOTAL ESTIMATED DEMAND LOAD:	112709 VA
HVAC - Heating	600 VA	80.00%	480 VA	TOTAL CONNECTED CURRENT:	426 A
				TOTAL ESTIMATED DEMAND...	313 A
				DEMAND WITH EXPANSION:	375 A

PANELBOARD: L

LOCATION: ELECTRICAL RM 003
SUPPLY FROM: SWBD MSBD
MOUNTING: SURFACE
ENCLOSURE: NEMA 1
VOLTAGE: 120/208 Wye
PHASE: 3
WIRES: 4
A.I.C. RATING: 65000
MAINS TYPE: MCB
MAINS RATING: 600 A
MCB RATING: 450 A

#	BKR	P	*	LOAD SERVED	WIRE AND CONDUIT	A		B		C		WIRE AND CONDUIT	LOAD SERVED	*	P	BKR	#
1						178 A	186 A										2
3	150	3		L4	3-#1/0, 1-#1/0, 1-#6 - 1-1/4"C			188 A	171 A			3-#1/0, 1-#1/0, 1-#6 - 1-1/4"C	L3		3	150	4
5										152 A	182 A						6
7	20	1	--	SPARE	--	0 A	0 A					--	SPARE	--	1	20	8
9								186 A	0 A			--	SPARE	--	1	20	10
11	150	3		L2	3-#1/0, 1-#1/0, 1-#6 - 1-1/4"C					190 A	6 A	2-#12, 1-#12 - 3/4"C	HVAC LIVING 100-3A		2	20	12
13						164 A	6 A										14
15	20	2		HVAC BEDROOM 100-3B	2-#12, 1-#12 - 3/4"C			6 A	0 A			--	SPARE	--	1	20	16
17										6 A	0 A	--	SPARE	--	1	20	18
19	20	1	--	SPARE	--	0 A	0 A					--	SPARE	--	1	20	20
21	20	1	--	SPARE	--			0 A	0 A			--	SPARE	--	1	20	22
23	20	1	--	SPARE	--					0 A	0 A	--	SPARE	--	1	20	24
25	20	1	--	SPARE	--	0 A	0 A					--	SPARE	--	1	20	26
27	20	1	--	SPARE	--			0 A	0 A			--	SPARE	--	1	20	28
29	20	1	--	SPARE	--					0 A	0 A	--	SPARE	--	1	20	30
31	20	1	--	SPARE	--	0 A	0 A					--	SPARE	--	1	20	32
33	20	1	--	SPARE	--			0 A	0 A			--	SPARE	--	1	20	34
35	20	1	--	SPARE	--					0 A	0 A	--	SPARE	--	1	20	36
37	20	1	--	SPARE	--	0 A	0 A					--	SPARE	--	1	20	38
39	20	1	--	SPARE	--			0 A	0 A			--	SPARE	--	1	20	40
41	20	1	--	SPARE	--					0 A	0 A	--	SPARE	--	1	20	42
					TOTAL LOAD:	64152 VA		66112 VA		64215 VA							
					TOTAL AMPS:	535 A		551 A		535 A							

*** CB TYPE:**
A AFCI
G GFCI
L LOCKABLE
R RED HANDLE

NOTES:

LOAD CLASSIFICATION	CONNECTED LOAD	DEMAND FACTOR	ESTIMATED DEMAND	PANEL TOTALS	
HVAC	10524 VA	75.00%	7893 VA		
Receptacle (Hotel)	173640 VA	36.91%	64092 VA	TOTAL CONNECTED LOAD:	194663 VA
LTG	10499 VA	50.00%	5250 VA	TOTAL ESTIMATED DEMAND LOAD:	77235 VA
				TOTAL CONNECTED CURRENT:	540 A
				TOTAL ESTIMATED DEMAND...	214 A
				DEMAND WITH EXPANSION:	257 A

PANELBOARD: AC1

LOCATION: MECHANICAL 005
SUPPLY FROM: HVAC
MOUNTING: SURFACE
ENCLOSURE: NEMA 1
VOLTAGE: 120/208 Wye
PHASE: 3
WIRES: 4
A.I.C. RATING: 42000
MAINS TYPE: MLO
MAINS RATING: 100 A
MCB RATING:

#	BKR	P	*	LOAD SERVED	WIRE AND CONDUIT	A		B		C		WIRE AND CONDUIT	LOAD SERVED	*	P	BKR	#
1	20	1		CUH-1 ROOM 226, 113	1-#12, 1-#12, 1-#12 - 3/4"C	1 A	8 A					2-#12, 1-#12 - 3/4"C	HVAC LIVING 102-1A		2	20	2
3	20	1		HVAC STAIR 114	1-#12, 1-#12, 1-#12 - 3/4"C			1 A	8 A								4
5	20	2		HVAC LIVING 104-1A	2-#12, 1-#12 - 3/4"C					8 A	8 A	2-#12, 1-#12 - 3/4"C	HVAC LIVING 107-1A		2	20	6
7						8 A	8 A										8
9	20	2		HVAC LIVING 109-1A	2-#12, 1-#12 - 3/4"C			8 A	4 A			2-#12, 1-#12 - 3/4"C	HVAC HOUSEKEEPING -STORAGE 120		2	20	10
11										8 A	4 A						12
13	20	2		HVAC LIVING 108-1A	2-#12, 1-#12 - 3/4"C	8 A	10 A					2-#12, 1-#12 - 3/4"C	HVAC LIVING 110-1A		2	20	14
15								8 A	10 A								16
17	20	2		HVAC LIVING 105-1A	2-#12, 1-#12 - 3/4"C					8 A	8 A	2-#12, 1-#12 - 3/4"C	HVAC LIVING 106-1A		2	20	18
19						8 A	8 A										20
21	20	2		HVAC GUEST LAUNDRY 115	2-#12, 1-#12 -			4 A	12 A			2-#12, 1-#12 - 3/4"C	SS/HP-1		2	15	22
23										4 A	12 A						24
25	15	2		SS-1	2-#12, 1-#12 -	12 A	12 A					2-#12, 1-#12 -	SS-1		2	20	26
27								12 A	12 A								28
29	20	1	--	SPARE	--					0 A	0 A	--	SPARE	--	1	20	30
31	20	1	--	SPARE	--	0 A	0 A					--	SPARE	--	1	20	32
33	20	1	--	SPARE	--			0 A	0 A			--	SPARE	--	1	20	34
35	20	1	--	SPARE	--					0 A	8 A	2-#12, 1-#12 - 3/4"C	HVAC LIVING 103-1A		2	20	36
37	20	1	--	SPARE	--	0 A	8 A										38
39	20	1	--	SPARE	--			0 A	8 A			2-#12, 1-#12 - 3/4"C	HVAC LIVING 101-1A		2	20	40
41	20	1		Power STAIR 119	1-#12, 1-#12, 1-#12 - 3/4"C					1 A	8 A						42
					TOTAL LOAD:	9314 VA		8880 VA		7806 VA							
					TOTAL AMPS:	79 A		75 A		65 A							

*** CB TYPE:**
A AFCI
G GFCI
L LOCKABLE
R RED HANDLE

NOTES:

LOAD CLASSIFICATION	CONNECTED LOAD	DEMAND FACTOR	ESTIMATED DEMAND	PANEL TOTALS	
HVAC	25759 VA	75.00%	19319 VA		
HVAC - Heating	240 VA	80.00%	192 VA	TOTAL CONNECTED LOAD:	25999 VA
				TOTAL ESTIMATED DEMAND LOAD:	19511 VA
				TOTAL CONNECTED CURRENT:	72 A
				TOTAL ESTIMATED DEMAND...	54 A
				DEMAND WITH EXPANSION:	65 A

SYM	DESCRIPTION	DATE	APPR

NAVFAC

COMMONWEALTH OF VIRGINIA
JUSTIN C. CASHWELL
Lic. No.047237
5/4/16
PROFESSIONAL ENGINEER
SEAL

BURNS McDONNELL
1305 EXECUTIVE BLVD.
SUITE 160
CHESAPEAKE, VA 23320
A/E INFO

APPROVED
FOR COMMANDER NAVFAC / B.L.T.L.

ACTIVITY
PER SAT-TO DOCUMENT FROM GERARD MONTANI (P&BRANCH HEAD) WITH FEAD AT NAVAL STATION NEWPORT-NEWPORT, RI

SATISFACTORY TO DATE 4/20/16

DES	DRW	CHK
JCC	LAW	KMS

PM / DM MLW/LEJ
BRANCH MANAGER
CHIEF ENG/ARCH DWG
FIRE PROTECTION

DEPARTMENT OF THE NAVY
NAVAL FACILITIES ENGINEERING COMMAND
NORTH IPT
NAVAL FACILITIES ENGINEERING COMMAND ~ MID-ATLANTIC
NEWPORT, RHODE ISLAND
NAVAL STATION NEWPORT
NEWPORT, RHODE ISLAND
RENOVATION OF NGIS, BUILDING 172
PANELBOARD SCHEDULES

SCALE: AS NOTED
EPROJECT NO. 13770079
CONSTR. CONTR. NO.
NAVFAC DRAWING NO. 12719566
SHEET 181 OF 200
E-701

DRAWFORM REVISION: 10 MAY 2014

FILE NAME: C:\Revit_Projects\86232-NGISBldg172\Models\MEP\86232_E_jccashwell.rvt
REVDATE: 5/2/2016 1:41:07 PM

PANELBOARD: L1

LOCATION: ELECTRICAL RM 003 **VOLTAGE:** 120/208 Wye **A.I.C. RATING:** 65000
SUPPLY FROM: SWBD MSBD **PHASE:** 3 **MAINS TYPE:** MLO
MOUNTING: SURFACE **WIRES:** 4 **MAINS RATING:** 100 A
ENCLOSURE: NEMA 1 **MCB RATING:**

#	BKR	P	*	LOAD SERVED	WIRE AND CONDUIT	A		B		C		WIRE AND CONDUIT	LOAD SERVED	*	P	BKR	#
1	20	1		REC CIRCULATION 116	1-#6, 1-#6, 1-#6 - 3/4"C	9 A	6 A					1-#12, 1-#12, 1-#12 - 3/4"C	REC CIRCULATION 118		1	20	2
3	20	1	G	ICE MACHINE LOBBY 113	1-#12, 1-#12, 1-#12 - 3/4"C			2 A	2 A			1-#12, 1-#12, 1-#12 - 3/4"C	REC RESTROOM 121		1	20	4
5	20	1	G	VEND LOBBY 113	1-#12, 1-#12, 1-#12 - 3/4"C					2 A	2 A	1-#12, 1-#12, 1-#12 - 3/4"C	VEND LOBBY 113	G	1	20	6
7	20	1	G	VEND LOBBY 113	1-#12, 1-#12, 1-#12 - 3/4"C	2 A	2 A					1-#12, 1-#12, 1-#12 - 3/4"C	ELEV SUMP PUMP	G	1	20	8
9	20	1		REC FIREPLACE	1-#12, 1-#12, 1-#12 -			2 A	3 A			1-#8, 1-#8, 1-#8 -	LTG		1	20	10
11	20	1		REC BEDROOM 111-1B	1-#10, 1-#10, 1-#10 - 3/4"C					11 A	2 A	1-#12, 1-#12, 1-#12 -	REC (Hotel) LOBBY 113		1	20	12
13	20	1		REC BATH-1 111-1C-1	1-#10, 1-#10, 1-#10 - 3/4"C	13 A	16 A					1-#8, 1-#8, 1-#8 - 3/4"C	REC LIVING 111-3A		1	20	14
15	20	1		REC LIVING 111-3A	1-#10, 1-#10, 1-#10 - 3/4"C			10 A	10 A			1-#10, 1-#10, 1-#10 - 3/4"C	REC LIVING 111-3A		1	20	16
17	20	1		REC (Hotel) LOBBY 113	1-#12, 1-#12, 1-#12 -					2 A	10 A	1-#10, 1-#10, 1-#10 - 3/4"C	REC LIVING 109-1A		1	20	18
19	20	1		PE SENSOR	1-#12, 1-#12, 1-#12 - 3/4"C	0 A	2 A					1-#12, 1-#12, 1-#12 - 3/4"C	REC LIVING 109-1A		1	20	20
21	20	1	--	SPARE	--			0 A	9 A			1-#10, 1-#10, 1-#10 - 3/4"C	REC LIVING 109-1A		1	20	22
23	20	1	--	SPARE	--					0 A	9 A	1-#10, 1-#10, 1-#10 - 3/4"C	REC BEDROOM 109-1B		1	20	24
25	20	1	--	SPARE	--	0 A	2 A					1-#12, 1-#12, 1-#12 - 3/4"C	REC BATH 109-1C		1	20	26
27	20	1	--	SPARE	--			0 A	10 A			1-#12, 1-#12, 1-#12 - 3/4"C	REC LIVING 103-1A		1	20	28
29	20	1	--	SPARE	--					0 A	9 A	1-#12, 1-#12, 1-#12 - 3/4"C	REC LIVING 107-1A		1	20	30
31	20	1	--	SPARE	--	0 A	2 A					1-#12, 1-#12, 1-#12 - 3/4"C	REC LIVING 107-1A		1	20	32
33	20	1		REC LIVING 107-1A	1-#12, 1-#12, 1-#12 - 3/4"C			10 A	2 A			1-#12, 1-#12, 1-#12 - 3/4"C	REC		1	20	34
35	20	1		REC BATH 107-1C	1-#12, 1-#12, 1-#12 - 3/4"C					2 A	11 A	1-#1/0, 1-#1/0, 1-#1/0 - 1-1/4"C	LTG 1ST FLR COMMON		1	20	36
37	20	1		REC BEDROOM 107-1B	1-#12, 1-#12, 1-#12 - 3/4"C	9 A	0 A					--	SPARE	--	1	20	38
39	20	1		REC LIVING 105-1A	1-#12, 1-#12, 1-#12 - 3/4"C			10 A	2 A			1-#12, 1-#12, 1-#12 - 3/4"C	REC LIVING 105-1A		1	20	40
41	20	1		REC LIVING 105-1A	1-#12, 1-#12, 1-#12 - 3/4"C					9 A	1 A	1-#12, 1-#12, 1-#12 -	Lighting - Dwelling Unit Room 10...		1	20	42
					TOTAL LOAD:	7200 VA		8344 VA		8056 VA							
					TOTAL AMPS:	60 A		71 A		68 A							

*** CB TYPE:**
A AFCI
G GFCI
L LOCKABLE
R RED HANDLE

NOTES:

LOAD CLASSIFICATION	CONNECTED LOAD	DEMAND FACTOR	ESTIMATED DEMAND	PANEL TOTALS	
LIGHTING	66 VA	125.00%	83 VA		
Receptacle (Hotel)	21780 VA	49.18%	10712 VA	**TOTAL CONNECTED LOAD:**	23603 VA
LTG	1757 VA	50.00%	879 VA	**TOTAL ESTIMATED DEMAND LOAD:**	11673 VA
				TOTAL CONNECTED CURRENT:	66 A
				TOTAL ESTIMATED DEMAND...	32 A
				DEMAND WITH EXPANSION:	39 A

PANELBOARD: AC-1A

LOCATION: MECHANICAL 005 **VOLTAGE:** 120/208 Wye **A.I.C. RATING:** 65000
SUPPLY FROM: HVAC **PHASE:** 3 **MAINS TYPE:** MCB
MOUNTING: SURFACE **WIRES:** 4 **MAINS RATING:** 225 A
ENCLOSURE: NEMA 1 **MCB RATING:** 150 A

#	BKR	P	*	LOAD SERVED	WIRE AND CONDUIT	A		B		C		WIRE AND CONDUIT	LOAD SERVED	*	P	BKR	#
1						24 A	11 A					1-#10, 1-#10, 1-#10 -	Appliance - Dwelling Unit GUES...		1	20	2
3	35	2	G	REC GUEST LAUNDRY 316	2-#10, 1-#10, 1-#10 - 3/4"C			24 A	24 A			2-#10, 1-#10, 1-#10 - 3/4"C	REC STAFF LAUNDRY & GENERAL STORAGE 317	G	2	35	4
5										24 A	24 A						6
7	35	2	G	REC STAFF LAUNDRY & GENERAL STORAGE 317	2-#10, 1-#10, 1-#10 - 3/4"C	24 A	24 A					2-#10, 1-#10, 1-#10 - 3/4"C	Electric Clothes Dryer STAFF LAUNDRY & GENERAL...	G	2	35	8
9	20	1		Appliance - Dwelling Unit STAFF...	1-#12, 1-#12, 1-#12 -			11 A	24 A								10
11	20	1		Appliance - Dwelling Unit STAFF...	1-#12, 1-#12, 1-#12 -					11 A	24 A	2-#10, 1-#10, 1-#10 - 3/4"C	REC STAFF LAUNDRY & GENERAL STORAGE 217	G	2	35	12
13	20	1		WH-1 RM 002	1-#12, 1-#12, 1-#12 -	1 A	24 A										14
15	20	1		REC STAFF LAUNDRY &...	1-#12, 1-#12, 1-#12 -			11 A	8 A								16
17										8 A	8 A	3-#12, 1-#12 -	HVAC MECHANICAL 001		3	20	18
19	20	3		HVAC MECHANICAL 001	3-#12, 1-#12 -	8 A	8 A										20
21								8 A	8 A								22
23	20	1		TRANSFORMER RM 002	1-#12, 1-#12, 1-#12 -					1 A	8 A	3-#12, 1-#12 -	HVAC MECHANICAL 001		3	20	24
25	20	1		TRANSFORMER RM 002	1-#12, 1-#12, 1-#12 -	1 A	8 A										26
27								8 A	8 A								28
29	20	3		HVAC MECHANICAL 005	3-#12, 1-#12 -					8 A	8 A	3-#12, 1-#12 -	HVAC MECHANICAL 005		3	20	30
31						8 A	8 A										32
33	35	2	G	Electric Clothes Dryer GUEST LAUNDRY 115	2-#10, 1-#10, 1-#10 - 3/4"C			24 A	11 A			1-#12, 1-#12, 1-#12 -	Appliance - Dwelling Unit GUES...		1	20	34
35										24 A	0 A	--	SPARE	--	1	20	36
37	20	1	--	SPARE	--	0 A	0 A					--	SPARE	--	1	20	38
39	20	1	--	SPARE	--			0 A	0 A			--	SPARE	--	1	20	40
41	20	1	--	SPARE	--					0 A	0 A	--	SPARE	--	1	20	42
					TOTAL LOAD:	16310 VA		18710 VA		16190 VA							
					TOTAL AMPS:	136 A		156 A		135 A							

*** CB TYPE:**
A AFCI
G GFCI
L LOCKABLE
R RED HANDLE

NOTES:

LOAD CLASSIFICATION	CONNECTED LOAD	DEMAND FACTOR	ESTIMATED DEMAND	PANEL TOTALS	
Other	0 VA	0.00%	0 VA		
HVAC	14610 VA	75.00%	10958 VA	**TOTAL CONNECTED LOAD:**	51210 VA
				TOTAL ESTIMATED DEMAND LOAD:	36398 VA
				TOTAL CONNECTED CURRENT:	142 A
				TOTAL ESTIMATED DEMAND...	101 A
				DEMAND WITH EXPANSION:	121 A

PANELBOARD: L1A

LOCATION: ELECTRICAL RM 003 **VOLTAGE:** 120/208 Wye **A.I.C. RATING:** 65000
SUPPLY FROM: SWBD MSBD **PHASE:** 3 **MAINS TYPE:** MLO
MOUNTING: SURFACE **WIRES:** 4 **MAINS RATING:** 100 A
ENCLOSURE: NEMA 1 **MCB RATING:**

#	BKR	P	*	LOAD SERVED	WIRE AND CONDUIT	A		B		C		WIRE AND CONDUIT	LOAD SERVED	*	P	BKR	#
1	20	1		LTG 1ST FLR ROOMS - EAST	1-#10, 1-#10, 1-#10 - 3/4"C	7 A	2 A					1-#12, 1-#12, 1-#12 - 3/4"C	REC BATH 105A-1C		1	20	2
3	20	1		REC LIVING 103-1A	1-#12, 1-#12, 1-#12 - 3/4"C			2 A	10 A			1-#4, 1-#4, 1-#4 - 3/4"C	LTG 1ST FLR ROOMS - WEST		1	20	4
5	20	1		REC BATH 103-1C	1-#12, 1-#12, 1-#12 - 3/4"C					2 A	9 A	1-#12, 1-#12, 1-#12 - 3/4"C	REC BEDROOM 105A-1B		1	20	6
7	20	1		REC LIVING 101-1A	1-#12, 1-#12, 1-#12 - 3/4"C	10 A	9 A					1-#12, 1-#12, 1-#12 - 3/4"C	REC LIVING 103-1A		1	20	8
9	20	1		LTG BASEMENT	1-#6, 1-#6, 1-#6 - 3/4"C			8 A	9 A			1-#12, 1-#12, 1-#12 - 3/4"C	REC BEDROOM 103-1B		1	20	10
11	20	1		REC BEDROOM 101-1B	1-#12, 1-#12, 1-#12 - 3/4"C					9 A	2 A	1-#12, 1-#12, 1-#12 - 3/4"C	REC LIVING 101-1A		1	20	12
13	20	1		REC LIVING 100-3A	1-#10, 1-#10, 1-#10 - 3/4"C	10 A	9 A					1-#12, 1-#12, 1-#12 - 3/4"C	REC LIVING 101-1A		1	20	14
15	20	1		REC LIVING 100-3A	1-#12, 1-#12, 1-#12 - 3/4"C			6 A	2 A			1-#12, 1-#12, 1-#12 - 3/4"C	REC BATH 101-1C		1	20	16
17	20	1		REC BEDROOM 100-3B	1-#10, 1-#10, 1-#10 - 3/4"C					11 A	10 A	1-#10, 1-#10, 1-#10 - 3/4"C	REC LIVING 100-3A		1	20	18
19	20	1		REC LIVING 102-1A	1-#12, 1-#12, 1-#12 - 3/4"C	2 A	10 A					1-#10, 1-#10, 1-#10 - 3/4"C	REC LIVING 100-3A		1	20	20
21	20	1		REC BEDROOM 102-1B	1-#12, 1-#12, 1-#12 - 3/4"C			9 A	13 A			1-#10, 1-#10, 1-#10 - 3/4"C	REC BATH-1 100-3C-1		1	20	22
23	20	1		REC LIVING 104-1A	1-#12, 1-#12, 1-#12 - 3/4"C					2 A	10 A	1-#12, 1-#12, 1-#12 - 3/4"C	REC LIVING 102-1A		1	20	24
25	20	1		REC BATH 104-1C	1-#12, 1-#12, 1-#12 - 3/4"C	2 A	9 A					1-#12, 1-#12, 1-#12 - 3/4"C	REC LIVING 102-1A		1	20	26
27	20	1		REC LIVING 106-1A	1-#12, 1-#12, 1-#12 - 3/4"C			10 A	10 A			1-#12, 1-#12, 1-#12 - 3/4"C	REC LIVING 104-1A		1	20	28
29	20	1		REC LIVING 106-1A	1-#12, 1-#12, 1-#12 - 3/4"C					9 A	9 A	1-#12, 1-#12, 1-#12 - 3/4"C	REC LIVING 104-1A		1	20	30
31	20	1		Receptacle (Hotel) Room 002,...	1-#10, 1-#10, 1-#10 -	9 A	9 A					1-#12, 1-#12, 1-#12 - 3/4"C	REC BEDROOM 104-1B		1	20	32
33	20	1		Receptacle (Hotel) COMM RM...	1-#12, 1-#12, 1-#12 -			2 A	2 A			1-#12, 1-#12, 1-#12 - 3/4"C	REC LIVING 106-1A		1	20	34
35	20	1		Receptacle (Hotel) COMM RM...	1-#12, 1-#12, 1-#12 -					2 A	2 A	1-#12, 1-#12, 1-#12 - 3/4"C	REC BATH 106-1C		1	20	36
37	20	1	--	SPARE	--	0 A	0 A					--	SPARE	--	1	20	38
39	20	1	--	SPARE	--			0 A	0 A			--	SPARE	--	1	20	40
41	20	1	--	SPARE	--					0 A	0 A	--	SPARE	--	1	20	42
					TOTAL LOAD:	10390 VA		9680 VA		8880 VA							
					TOTAL AMPS:	88 A		82 A		74 A							

*** CB TYPE:**
A AFCI
G GFCI
L LOCKABLE
R RED HANDLE

NOTES:

LOAD CLASSIFICATION	CONNECTED LOAD	DEMAND FACTOR	ESTIMATED DEMAND	PANEL TOTALS	
Other	0 VA	0.00%	0 VA		
LIGHTING	44 VA	125.00%	55 VA	**TOTAL CONNECTED LOAD:**	28958 VA
Lighting - Dwelling Unit	10 VA	100.00%	10 VA	**TOTAL ESTIMATED DEMAND LOAD:**	13925 VA
Receptacle (Hotel)	25920 VA	47.72%	12368 VA	**TOTAL CONNECTED CURRENT:**	80 A
LTG	2984 VA	50.00%	1492 VA	**TOTAL ESTIMATED DEMAND...**	39 A
				DEMAND WITH EXPANSION:	46 A

PANELBOARD: L1B

LOCATION: ELECTRICAL RM 003 **VOLTAGE:** 120/208 Wye **A.I.C. RATING:** 65000
SUPPLY FROM: SWBD MSBD **PHASE:** 3 **MAINS TYPE:** MLO
MOUNTING: SURFACE **WIRES:** 4 **MAINS RATING:** 100 A
ENCLOSURE: NEMA 1 **MCB RATING:**

#	BKR	P	*	LOAD SERVED	WIRE AND CONDUIT	A		B		C		WIRE AND CONDUIT	LOAD SERVED	*	P	BKR	#
1	20	1		REC LIVING 108-1A	1-#12, 1-#12, 1-#12 - 3/4"C	10 A	2 A					1-#12, 1-#12, 1-#12 - 3/4"C	REC LIVING 108-1A		1	20	2
3	20	1		REC LIVING 108-1A	1-#12, 1-#12, 1-#12 - 3/4"C			9 A	2 A			1-#12, 1-#12, 1-#12 - 3/4"C	REC BATH 108-1C		1	20	4
5	20	1		REC BEDROOM 108-1B	1-#12, 1-#12, 1-#12 - 3/4"C					9 A	10 A	1-#12, 1-#12, 1-#12 - 3/4"C	REC LIVING 110-1A		1	20	6
7	20	1		REC LIVING 110-1A	1-#12, 1-#12, 1-#12 - 3/4"C	2 A	9 A					1-#12, 1-#12, 1-#12 - 3/4"C	REC LIVING 110-1A		1	20	8
9	20	1		REC BATH 110-1C	1-#12, 1-#12, 1-#12 - 3/4"C			2 A	9 A			1-#10, 1-#10, 1-#10 - 3/4"C	REC BEDROOM 110-1B		1	20	10
11	20	1		REC BATH 102-1C	1-#12, 1-#12, 1-#12 - 3/4"C					2 A	9 A	1-#12, 1-#12, 1-#12 - 3/4"C	REC BEDROOM 106-1B		1	20	12
13	20	1	--	SPARE	--	0 A	0 A					--	SPARE	--	1	20	14
15	20	1	--	SPARE	--			0 A	0 A			--	SPARE	--	1	20	16
17	20	1	--	SPARE	--					0 A	0 A	--	SPARE	--	1	20	18
19	20	1	--	SPARE	--	0 A	0 A					--	SPARE	--	1	20	20
21	20	1	--	SPARE	--			0 A	0 A			--	SPARE	--	1	20	22
23	20	1	--	SPARE	--					0 A	0 A	--	SPARE	--	1	20	24
25	20	1	--	SPARE	--	0 A	0 A					--	SPARE	--	1	20	26
27	20	1	--	SPARE	--			0 A	0 A			--	SPARE	--	1	20	28
29	20	1	--	SPARE	--					0 A	0 A	--	SPARE	--	1	20	30
31	20	1	--	SPARE	--	0 A	0 A					--	SPARE	--	1	20	32
33	20	1	--	SPARE	--			0 A	0 A			--	SPARE	--	1	20	34
35	20	1	--	SPARE	--					0 A	0 A	--	SPARE	--	1	20	36
37	20	1	--	SPARE	--	0 A	0 A					--	SPARE	--	1	20	38
39	20	1	--	SPARE	--			0 A	0 A			--	SPARE	--	1	20	40
41	20	1	--	SPARE	--					0 A	0 A	--	SPARE	--	1	20	42
					TOTAL LOAD:	2640 VA		2520 VA		3540 VA							
					TOTAL AMPS:	22 A		21 A		30 A							

*** CB TYPE:**
A AFCI
G GFCI
L LOCKABLE
R RED HANDLE

NOTES:

LOAD CLASSIFICATION	CONNECTED LOAD	DEMAND FACTOR	ESTIMATED DEMAND	PANEL TOTALS	
Receptacle (Hotel)	8700 VA	50.00%	4350 VA		
				TOTAL CONNECTED LOAD:	8700 VA
				TOTAL ESTIMATED DEMAND LOAD:	4350 VA
				TOTAL CONNECTED CURRENT:	24 A
				TOTAL ESTIMATED DEMAND...	12 A
				DEMAND WITH EXPANSION:	14 A

SYM	DESCRIPTION	DATE	APPR

NAVFAC

COMMONWEALTH OF VIRGINIA
JUSTIN C. CASHWELL
Lic. No.047237
5/4/16
PROFESSIONAL ENGINEER
SEAL

BURNS McDONNELL
1305 EXECUTIVE BLVD.
SUITE 160
CHESAPEAKE, VA 23320
A/E INFO

APPROVED
David W. Brangfield
FOR COMMANDER NAVFAC / B.L.T.L.

ACTIVITY
PER SAT-TO DOCUMENT FROM GERARD MONTANI (PM&BRANCH HEAD) WITH FEAD AT NAVAL STATION NEWPORT-NEWPORT, RI

SATISFACTORY TO DATE 4/20/16

DES JCC | DRW LAW | CHK KMS
PM / DM MLW/LEJ
BRANCH MANAGER
CHIEF ENG/ARCH DWG
FIRE PROTECTION

DEPARTMENT OF THE NAVY
NAVAL FACILITIES ENGINEERING COMMAND
NORTH IPT

NAVAL FACILITIES ENGINEERING COMMAND ~ MID-ATLANTIC
NEWPORT, RHODE ISLAND

NAVAL STATION NEWPORT

RENOVATION OF NGIS, BUILDING 172

PANELBOARD SCHEDULES

SCALE: AS NOTED
EPROJECT NO. 13770079
CONSTR. CONTR. NO.
NAVFAC DRAWING NO. 12719567
SHEET 182 OF 200
E-702

DRAWFORM REVISION: 10 MAY 2014

FILE NAME: C:\Revit_Projects\86232-NGISBldg172\Models\MEP\86232_E_jccashwell.rvt
REVDATE: 5/2/2016 1:41:09 PM

PANELBOARD: L2

LOCATION: MECH 218 | SUPPLY FROM: L | MOUNTING: SURFACE | ENCLOSURE: NEMA 1
VOLTAGE: 120/208 Wye | PHASE: 3 | WIRES: 4
A.I.C. RATING: 42000 | MAINS TYPE: MCB | MAINS RATING: 225 A | MCB RATING: 150 A

#	BKR	P	*	LOAD SERVED	WIRE AND CONDUIT	A		B		C		WIRE AND CONDUIT	LOAD SERVED	*	P	BKR	#
1	20	1		REC BEDROOM 200-3B	1-#10, 1-#10, 1-#10 - 3/4"C	11 A	9 A					1-#10, 1-#10, 1-#10 - 3/4"C	REC Room 217, 143, 221, 213		1	20	2
3	20	1		REC BATH 200-1C	1-#10, 1-#10, 1-#10 - 3/4"C			13 A	10 A			1-#12, 1-#12, 1-#12 - 3/4"C	REC LIVING 200-3A		1	20	4
5	20	1		REC LIVING 200-3A	1-#12, 1-#12, 1-#12 - 3/4"C					10 A	11 A	1-#12, 1-#12, 1-#12 - 3/4"C	REC BEDROOM 206-4A		1	20	6
7	20	1		REC BATH 201-1C	1-#12, 1-#12, 1-#12 - 3/4"C	2 A	2 A					1-#12, 1-#12, 1-#12 - 3/4"C	REC BATH 204-1C		1	20	8
9	20	1		REC BATH 202-1C	1-#12, 1-#12, 1-#12 - 3/4"C			2 A	6 A			1-#12, 1-#12, 1-#12 - 3/4"C	REC LIVING 200-3A		1	20	10
11	20	1		REC LIVING 200-3A	1-#12, 1-#12, 1-#12 - 3/4"C					10 A	9 A	1-#12, 1-#12, 1-#12 - 3/4"C	REC BEDROOM 202-1B		1	20	12
13	20	1		LTG 2ND FLR ROOMS - WEST	1-#6, 1-#6, 1-#6 - 3/4"C	11 A	7 A					1-#10, 1-#10, 1-#10 - 3/4"C	LTG 2ND FLR ROOMS - EAST		1	20	14
15	20	1		REC BEDROOM 204-1B	1-#12, 1-#12, 1-#12 - 3/4"C			9 A	0 A			--	SPARE	--	1	20	16
17	20	1	--	SPARE	--					0 A	0 A	--	SPARE	--	1	20	18
19	20	1		REC LIVING 204-1A	1-#12, 1-#12, 1-#12 - 3/4"C	9 A	2 A					1-#12, 1-#12, 1-#12 - 3/4"C	REC LIVING 204-1A		1	20	20
21	20	1		REC LIVING 202-1A	1-#12, 1-#12, 1-#12 - 3/4"C			9 A	10 A			1-#12, 1-#12, 1-#12 - 3/4"C	REC LIVING 204-1A		1	20	22
23	20	1		REC LIVING 202-1A	1-#12, 1-#12, 1-#12 - 3/4"C					2 A	10 A	1-#12, 1-#12, 1-#12 - 3/4"C	REC LIVING 202-1A		1	20	24
25	20	1		REC BEDROOM 201-1B	1-#12, 1-#12, 1-#12 - 3/4"C	9 A	9 A					1-#12, 1-#12, 1-#12 - 3/4"C	REC LIVING 201-1A		1	20	26
27	20	1		REC LIVING 201-1A	1-#12, 1-#12, 1-#12 - 3/4"C			2 A	10 A			1-#12, 1-#12, 1-#12 - 3/4"C	REC LIVING 201-1A		1	20	28
29	20	1		REC BATH 203-1C	1-#12, 1-#12, 1-#12 - 3/4"C					2 A	2 A	1-#12, 1-#12, 1-#12 - 3/4"C	REC LIVING 203-1A		1	20	30
31	20	1		REC BEDROOM 203-1B	1-#12, 1-#12, 1-#12 - 3/4"C	9 A	9 A					1-#12, 1-#12, 1-#12 - 3/4"C	REC LIVING 203-1A		1	20	32
33	20	1		REC LIVING 203-1A	1-#12, 1-#12, 1-#12 - 3/4"C			10 A	2 A			1-#12, 1-#12, 1-#12 - 3/4"C	REC BATH 205-1C		1	20	34
35	20	1		REC BEDROOM 206-4A	1-#12, 1-#12, 1-#12 - 3/4"C					8 A	9 A	1-#12, 1-#12, 1-#12 - 3/4"C	REC BEDROOM 205-1B		1	20	36
37	20	1		REC LIVING 205-1A	1-#12, 1-#12, 1-#12 - 3/4"C	9 A	2 A					1-#12, 1-#12, 1-#12 - 3/4"C	REC LAUNDRY RM 216		1	20	38
39	20	1		REC Room 143, 221	1-#12, 1-#12, 1-#12 - 3/4"C			6 A	10 A			1-#12, 1-#12, 1-#12 - 3/4"C	REC BEDROOM 206-4A		1	20	40
41	20	1		REC BEDROOM 208-1B	1-#12, 1-#12, 1-#12 - 3/4"C					9 A	2 A	1-#12, 1-#12, 1-#12 - 3/4"C	REC LIVING 205-1A		1	20	42
43	20	1		REC LIVING 205-1A	1-#12, 1-#12, 1-#12 - 3/4"C	10 A	2 A					1-#12, 1-#12, 1-#12 - 3/4"C	REC BATH 207-1C		1	20	44
45	20	1		REC BEDROOM 207-1B	1-#12, 1-#12, 1-#12 - 3/4"C			9 A	9 A			1-#12, 1-#12, 1-#12 - 3/4"C	REC LIVING 207-1A		1	20	46
47	20	1		REC LIVING 207-1A	1-#12, 1-#12, 1-#12 - 3/4"C					2 A	10 A	1-#12, 1-#12, 1-#12 - 3/4"C	REC LIVING 207-1A		1	20	48
49	20	1		REC BATH 209-1C	1-#12, 1-#12, 1-#12 - 3/4"C	2 A	9 A					1-#12, 1-#12, 1-#12 - 3/4"C	REC BEDROOM 209-1B		1	20	50
51	20	1		REC LIVING 209-1A	1-#10, 1-#10, 1-#10 - 3/4"C			9 A	2 A			1-#12, 1-#12, 1-#12 - 3/4"C	REC LIVING 209-1A		1	20	52
53	20	1		REC LIVING 209-1A	1-#10, 1-#10, 1-#10 - 3/4"C					10 A	2 A	1-#12, 1-#12, 1-#12 - 3/4"C	REC BATH 212-1C		1	20	54
55	20	2		HVAC RM 212-1A, 212-1B	2-#12, 1-#12 - 3/4"C	8 A	9 A					1-#10, 1-#10, 1-#10 - 3/4"C	REC BEDROOM 212-1B		1	20	56
57								8 A	9 A			1-#10, 1-#10, 1-#10 - 3/4"C	REC LIVING 212-1A		1	20	58
59	20	1		REC LIVING 212-1A	1-#12, 1-#12, 1-#12 - 3/4"C					2 A	10 A	1-#10, 1-#10, 1-#10 - 3/4"C	REC LIVING 212-1A		1	20	60
61	20	1		REC BATH 210-1C	1-#12, 1-#12, 1-#12 - 3/4"C	2 A	8 A					2-#12, 1-#12 - 3/4"C	HVAC RM 210-1A, 210-1B		2	20	62
63	20	1		REC BEDROOM 210-1B	1-#12, 1-#12, 1-#12 - 3/4"C			9 A	8 A								64
65	20	1		REC LIVING 210-1A	1-#12, 1-#12, 1-#12 - 3/4"C					9 A	2 A	1-#12, 1-#12, 1-#12 - 3/4"C	REC LIVING 210-1A		1	20	66
67	20	1		REC LIVING 210-1A	1-#12, 1-#12, 1-#12 - 3/4"C	10 A	2 A					1-#12, 1-#12, 1-#12 - 3/4"C	REC BATH 208-1C		1	20	68
69	20	1		REC BATH 211-1C	1-#8, 1-#8, 1-#8 - 3/4"C			13 A	11 A			1-#10, 1-#10, 1-#10 - 3/4"C	REC BEDROOM 211-1B		1	20	70
71	20	1		REC LIVING 211-1A	1-#12, 1-#12, 1-#12 - 3/4"C					6 A	10 A	1-#10, 1-#10, 1-#10 - 3/4"C	REC LIVING 211-1A		1	20	72
73	20	1		REC LIVING 211-1A	1-#10, 1-#10, 1-#10 - 3/4"C	10 A	10 A					1-#10, 1-#10, 1-#10 - 3/4"C	REC LIVING 211-1A		1	20	74
75	20	1		REC LIVING 208-1A	1-#12, 1-#12, 1-#12 - 3/4"C			9 A	2 A			1-#12, 1-#12, 1-#12 - 3/4"C	REC LIVING 208-1A		1	20	76
77	20	1		REC LIVING 208-1A	1-#12, 1-#12, 1-#12 - 3/4"C					10 A	13 A	1-#12, 1-#12, 1-#12 - 3/4"C	REC BATH 206-4B		1	20	78
79	20	1		LTG 2ND FLR COMMON	1-#2, 1-#2, 1-#2 - 1-1/4"C	11 A	0 A					--	SPARE	--	1	20	80
81	20	1	--	SPARE	--			0 A	0 A			--	SPARE	--	1	20	82
83	20	1	--	SPARE	--					0 A	0 A	--	SPARE	--	1	20	84
					TOTAL LOAD:	22346 VA		22864 VA		19740 VA		NOTES:					
					TOTAL AMPS:	190 A		194 A		165 A							

*** CB TYPE:**
A AFCI
G GFCI
L LOCKABLE
R RED HANDLE

LOAD CLASSIFICATION	CONNECTED LOAD	DEMAND FACTOR	ESTIMATED DEMAND	PANEL TOTALS	
HVAC	3248 VA	75.00%	2436 VA		
Receptacle (Hotel)	58200 VA	43.44%	25280 VA	TOTAL CONNECTED LOAD:	64951 VA
LTG	3503 VA	50.00%	1752 VA	TOTAL ESTIMATED DEMAND LOAD:	29468 VA
				TOTAL CONNECTED CURRENT:	180 A
				TOTAL ESTIMATED DEMAND...	82 A
				DEMAND WITH EXPANSION:	98 A

PANELBOARD: L3

LOCATION: MECH 318 | SUPPLY FROM: L | MOUNTING: SURFACE | ENCLOSURE: NEMA 1
VOLTAGE: 120/208 Wye | PHASE: 3 | WIRES: 4
A.I.C. RATING: 42000 | MAINS TYPE: MCB | MAINS RATING: 225 A | MCB RATING: 150 A

#	BKR	P	*	LOAD SERVED	WIRE AND CONDUIT	A		B		C		WIRE AND CONDUIT	LOAD SERVED	*	P	BKR	#
1	20	1		REC CORRIDOR 313	1-#12, 1-#12, 1-#12 - 3/4"C	6 A	9 A					1-#10, 1-#10, 1-#10 - 3/4"C	REC CORRIDOR 313		1	20	2
3	20	1		REC BEDROOM-2 311-1B-2	1-#10, 1-#10, 1-#10 - 3/4"C			11 A	10 A			1-#10, 1-#10, 1-#10 - 3/4"C	REC LIVING 309-1A		1	20	4
5	20	1		REC BATH 311-1C	1-#8, 1-#8, 1-#8 - 3/4"C					13 A	2 A	1-#12, 1-#12, 1-#12 - 3/4"C	REC LIVING 309-1A		1	20	6
7	20	1		REC LIVING 311-1A	1-#12, 1-#12, 1-#12 - 3/4"C	6 A	10 A					1-#10, 1-#10, 1-#10 - 3/4"C	REC LIVING 311-1A		1	20	8
9	20	1		REC LIVING 311-1A	1-#10, 1-#10, 1-#10 - 3/4"C			10 A	10 A			1-#10, 1-#10, 1-#10 - 3/4"C	REC LIVING 311-1A		1	20	10
11	20	1		REC LIVING 309-1A	1-#10, 1-#10, 1-#10 - 3/4"C					9 A	9 A	1-#12, 1-#12, 1-#12 - 3/4"C	REC BEDROOM 309-1B		1	20	12
13	20	1		REC BATH 309-1C	1-#12, 1-#12, 1-#12 - 3/4"C	2 A	10 A					1-#12, 1-#12, 1-#12 - 3/4"C	REC LIVING 307-1A		1	20	14
15	20	1		REC LIVING 307-1A	1-#12, 1-#12, 1-#12 - 3/4"C			2 A	9 A			1-#12, 1-#12, 1-#12 - 3/4"C	REC LIVING 307-1A		1	20	16
17	20	1		REC BATH 307-1C	1-#12, 1-#12, 1-#12 - 3/4"C					2 A	9 A	1-#12, 1-#12, 1-#12 - 3/4"C	REC BEDROOM 307-1B		1	20	18
19	20	1		REC BATH 305-1C	1-#12, 1-#12, 1-#12 - 3/4"C	2 A	10 A					1-#12, 1-#12, 1-#12 - 3/4"C	REC LIVING 305-1A		1	20	20
21	20	1		REC BEDROOM 305-1B	1-#12, 1-#12, 1-#12 - 3/4"C			9 A	2 A			1-#12, 1-#12, 1-#12 - 3/4"C	REC LIVING 305-1A		1	20	22
23	20	1		REC LIVING 305-1A	1-#12, 1-#12, 1-#12 - 3/4"C					9 A	11 A	1-#1, 1-#1, 1-#1 - 1-1/4"C	LTG 3RD FLR COMMON		1	20	24
25	20	1		LTG 3RD FLR ROOMS - WEST	1-#6, 1-#6, 1-#6 - 3/4"C	11 A	7 A					1-#10, 1-#10, 1-#10 - 3/4"C	LTG 3RD FLR ROOMS - EAST		1	20	26
27	20	1		REC LIVING 303-1A	1-#12, 1-#12, 1-#12 - 3/4"C			10 A	2 A			1-#12, 1-#12, 1-#12 - 3/4"C	REC LIVING 303-1A		1	20	28
29	20	1		REC LIVING 303-1A	1-#12, 1-#12, 1-#12 - 3/4"C					9 A	2 A	1-#12, 1-#12, 1-#12 - 3/4"C	REC BATH 303-1C		1	20	30
31	20	1		REC BEDROOM 303-1B	1-#12, 1-#12, 1-#12 - 3/4"C	9 A	10 A					1-#12, 1-#12, 1-#12 - 3/4"C	REC LIVING 301-1A		1	20	32
33	20	1		REC LIVING 301-1A	1-#12, 1-#12, 1-#12 - 3/4"C			2 A	9 A			1-#12, 1-#12, 1-#12 - 3/4"C	REC LIVING 301-1A		1	20	34
35	20	1		REC BATH 301-1C	1-#12, 1-#12, 1-#12 - 3/4"C					2 A	9 A	1-#12, 1-#12, 1-#12 - 3/4"C	REC BEDROOM 301-1B		1	20	36
37	20	1		REC LIVING 300-3A	1-#12, 1-#12, 1-#12 - 3/4"C	10 A	10 A					1-#12, 1-#12, 1-#12 - 3/4"C	REC LIVING 300-3A		1	20	38
39	20	1		REC LIVING 300-3A	1-#12, 1-#12, 1-#12 - 3/4"C			10 A	6 A			1-#12, 1-#12, 1-#12 - 3/4"C	REC LIVING 300-3A		1	20	40
41	20	1		REC BATH-1 300-3C-1	1-#10, 1-#10, 1-#10 - 3/4"C					13 A	11 A	1-#10, 1-#10, 1-#10 - 3/4"C	REC BEDROOM 300-3B		1	20	42
43	20	1		REC LIVING 302-1A	1-#12, 1-#12, 1-#12 - 3/4"C	10 A	2 A					1-#12, 1-#12, 1-#12 - 3/4"C	REC LIVING 302-1A		1	20	44
45	20	1		REC LIVING 302-1A	1-#12, 1-#12, 1-#12 - 3/4"C			9 A	2 A			1-#12, 1-#12, 1-#12 - 3/4"C	REC BATH 302-1C		1	20	46
47	20	1		REC BEDROOM 302-1B	1-#12, 1-#12, 1-#12 - 3/4"C					9 A	10 A	1-#12, 1-#12, 1-#12 - 3/4"C	REC LIVING 304-1A		1	20	48
49	20	1		REC LIVING 304-1A	1-#12, 1-#12, 1-#12 - 3/4"C	2 A	9 A					1-#12, 1-#12, 1-#12 - 3/4"C	REC LIVING 304-1A		1	20	50
51	20	1		REC BATH 304-1C	1-#12, 1-#12, 1-#12 - 3/4"C			2 A	9 A			1-#12, 1-#12, 1-#12 - 3/4"C	REC BEDROOM 304-1B		1	20	52
53	20	1		REC LIVING 308-1A	1-#12, 1-#12, 1-#12 - 3/4"C					9 A	2 A	1-#12, 1-#12, 1-#12 - 3/4"C	REC LIVING 308-1A		1	20	54
55	20	1		REC LIVING 308-1A	1-#12, 1-#12, 1-#12 - 3/4"C	10 A	9 A					1-#12, 1-#12, 1-#12 - 3/4"C	REC BEDROOM 308-1B		1	20	56
57	20	1		REC BATH 308-1C	1-#12, 1-#12, 1-#12 - 3/4"C			2 A	10 A			1-#12, 1-#12, 1-#12 - 3/4"C	REC LIVING 310-1A		1	20	58
59	20	1		REC LIVING 310-1A	1-#12, 1-#12, 1-#12 - 3/4"C					2 A	9 A	1-#12, 1-#12, 1-#12 - 3/4"C	REC LIVING 310-1A		1	20	60
61	20	1		REC BATH 310-1C	1-#12, 1-#12, 1-#12 - 3/4"C	2 A	9 A					1-#12, 1-#12, 1-#12 - 3/4"C	REC BEDROOM 310-1B		1	20	62
63	20	1		REC LIVING 312-1A	1-#10, 1-#10, 1-#10 - 3/4"C			10 A	2 A			1-#12, 1-#12, 1-#12 - 3/4"C	REC LIVING 312-1A		1	20	64
65	20	1		REC LIVING 312-1A	1-#10, 1-#10, 1-#10 - 3/4"C					9 A	2 A	1-#12, 1-#12, 1-#12 - 3/4"C	REC BATH 312-1C		1	20	66
67	20	1		REC BEDROOM 312-1B	1-#10, 1-#10, 1-#10 - 3/4"C	9 A	1 A					1-#12, 1-#12, 1-#12 - 3/4"C	REC STAIRS 321		1	20	68
69	20	1		REC STAIRS 315	1-#12, 1-#12, 1-#12 - 3/4"C			1 A	12 A			2-#12, 1-#12, 1-#12 - 3/4"C	REC LAUNDRY / GENERAL STORAGE 317		2	20	70
71	20	2		HVAC HOUSEKEEPING / STORAGE 323	2-#12, 1-#12 - 3/4"C					4 A	12 A						72
73						4 A	11 A					1-#12, 1-#12, 1-#12 -	Receptacle (Hotel) BEDROOM...		1	20	74
75	20	1		Receptacle (Hotel) BEDROOM...	1-#12, 1-#12, 1-#12 -			8 A	10 A			1-#12, 1-#12, 1-#12 -	Receptacle (Hotel) BEDROOM...		1	20	76
77	20	1		Receptacle (Hotel) BATH 306-4B	1-#12, 1-#12, 1-#12 -					13 A	0 A	--	SPARE	--	1	20	78
79	20	1	--	SPARE	--	0 A	0 A					--	SPARE	--	1	20	80
81	20	1	--	SPARE	--			0 A	0 A			--	SPARE	--	1	20	82
83	20	1	--	SPARE	--					0 A	0 A	--	SPARE	--	1	20	84
					TOTAL LOAD:	22380 VA		20587 VA		21956 VA		NOTES:					
					TOTAL AMPS:	188 A		172 A		185 A							

*** CB TYPE:**
A AFCI
G GFCI
L LOCKABLE
R RED HANDLE

LOAD CLASSIFICATION	CONNECTED LOAD	DEMAND FACTOR	ESTIMATED DEMAND	PANEL TOTALS	
HVAC	3406 VA	75.00%	2555 VA		
Receptacle (Hotel)	58020 VA	43.45%	25208 VA	TOTAL CONNECTED LOAD:	64924 VA
LTG	3498 VA	50.00%	1749 VA	TOTAL ESTIMATED DEMAND LOAD:	29512 VA
				TOTAL CONNECTED CURRENT:	180 A
				TOTAL ESTIMATED DEMAND...	82 A
				DEMAND WITH EXPANSION:	98 A

PANELBOARD: AC2

LOCATION: MECH 218 | SUPPLY FROM: HVAC | MOUNTING: SURFACE | ENCLOSURE: NEMA 1
VOLTAGE: 120/208 Wye | PHASE: 3 | WIRES: 4
A.I.C. RATING: 42000 | MAINS TYPE: MCB | MAINS RATING: 100 A | MCB RATING: 100 A

#	BKR	P	*	LOAD SERVED	WIRE AND CONDUIT	A		B		C		WIRE AND CONDUIT	LOAD SERVED	*	P	BKR	#
1	20	2		HVAC Room 208-1A, 208-1B	2-#12, 1-#12 - 3/4"C	8 A	8 A					2-#12, 1-#12 - 3/4"C	HVAC Room 204-1A, 204-1B		2	20	2
3								8 A	8 A								4
5	20	2		HVAC BEDROOM 206-4A	2-#12, 1-#12 - 3/4"C					4 A	8 A	2-#12, 1-#12 - 3/4"C	HVAC Room 202-1A, 202-1B		2	20	6
7						4 A	8 A										8
9	20	2		HVAC Room 201-1A, 201-1B	2-#12, 1-#12 - 3/4"C			8 A	4 A			2-#12, 1-#12 - 3/4"C	HVAC HOUSEKEEPING / STORAGE 221		2	20	10
11										8 A	4 A						12
13	20	1	--	SPARE	--	0 A	0 A					--	SPARE	--	1	20	14
15	20	1	--	SPARE	--			0 A	0 A			--	SPARE	--	1	20	16
17	20	1	--	SPARE	--					0 A	0 A	--	SPARE	--	1	20	18
19	20	1	--	SPARE	--	0 A	0 A					--	SPARE	--	1	20	20
21	20	1		WASH LAUNDRY RM 216	1-#12, 1-#12, 1-#12 - 3/4"C			2 A	0 A			--	SPARE	--	1	20	22
23											0 A	--	SPARE	--	1	20	24
25	20	2		HVAC - Cooling LAUNDRY / GENERAL STORAGE 218	2-#12, 1-#12 - 3/4"C	12 A	0 A					--	SPARE	--	1	20	26
27								12 A	0 A			--	SPARE	--	1	20	28
29	20	2		HVAC Room 203-1A, 203-1B	2-#12, 1-#12 - 3/4"C					8 A	4 A	2-#12, 1-#12 -	HVAC SUPPLY STOREROOM-1 216-1		2	20	30
31						8 A	4 A										32
33	20	2		HVAC Room 205-1A, 205-1B	2-#12, 1-#12 - 3/4"C			8 A	1 A			1-#12, 1-#12, 1-#12 - 3/4"C	HVAC - Heating CIRCULATION ...		1	20	34
35										8 A							36
37	20	1		HVAC - Heating STAIR 215	1-#12, 1-#12, 1-#12 - 3/4"C	1 A	1 A					1-#12, 1-#12, 1-#12 - 3/4"C	Power STAIR 220		1	20	38
39	20	2		HVAC Room 207-1A, 207-1B	2-#12, 1-#12 - 3/4"C			8 A	8 A			2-#12, 1-#12 - 3/4"C	HVAC Room 209-1A, 209-1B		2	20	40
41										8 A	8 A						42
					TOTAL LOAD:	5387 VA		6725 VA		6090 VA		NOTES:					
					TOTAL AMPS:	45 A		57 A		52 A							

*** CB TYPE:**
A AFCI
G GFCI
L LOCKABLE
R RED HANDLE

LOAD CLASSIFICATION	CONNECTED LOAD	DEMAND FACTOR	ESTIMATED DEMAND	PANEL TOTALS	
HVAC	17842 VA	75.00%	13382 VA		
Receptacle (Hotel)	180 VA	50.00%	90 VA	TOTAL CONNECTED LOAD:	18202 VA
HVAC - Heating	180 VA	80.00%	144 VA	TOTAL ESTIMATED DEMAND LOAD:	13616 VA
				TOTAL CONNECTED CURRENT:	51 A
				TOTAL ESTIMATED DEMAND...	38 A
				DEMAND WITH EXPANSION:	45 A

PANELBOARD: AC3

LOCATION: MECH 318 | SUPPLY FROM: HVAC | MOUNTING: SURFACE | ENCLOSURE: NEMA 1
VOLTAGE: 120/208 Wye | PHASE: 3 | WIRES: 4
A.I.C. RATING: 42000 | MAINS TYPE: MCB | MAINS RATING: 100 A | MCB RATING: 100 A

#	BKR	P	*	LOAD SERVED	WIRE AND CONDUIT	A		B		C		WIRE AND CONDUIT	LOAD SERVED	*	P	BKR	#
1	20	2		HVAC BEDROOM 301-1B	2-#12, 1-#12 - 3/4"C	8 A	0 A					--	SPARE	--	1	20	2
3								8 A	0 A			--	SPARE	--	1	20	4
5	20	1	--	SPARE	--					0 A	8 A	2-#12, 1-#12 - 3/4"C	HVAC BEDROOM 302-1B		2	20	6
7	20	1	--	SPARE	--	0 A	8 A										8
9	20	2		HVAC LIVING 303-1A	2-#12, 1-#12 - 3/4"C			8 A	0 A			--	SPARE	--	1	20	10
11										8 A	0 A	--	SPARE	--	1	20	12
13	20	1	--	SPARE	--	0 A	8 A					2-#12, 1-#12 - 3/4"C	HVAC BEDROOM 304-1B		2	20	14
15	20	1	--	SPARE	--			0 A	8 A								16
17	20	2		HVAC LIVING 305-1A	2-#12, 1-#12 - 3/4"C					8 A	0 A	--	SPARE	--	1	20	18
19						8 A	0 A					--	SPARE	--	1	20	20
21	20	2		HVAC BEDROOM 306-4A	2-#12, 1-#12, 1-#12 -			4 A	0 A			--	SPARE	--	1	20	22
23										4 A	0 A	--	SPARE	--	1	20	24
25	20	2		HVAC LIVING 307-1A	2-#12, 1-#12 - 3/4"C	8 A	0 A					--	SPARE	--	1	20	26
27								8 A	0 A			--	SPARE	--	1	20	28
29	20	2		HVAC LIVING 308-1A	2-#12, 1-#12 - 3/4"C					8 A	0 A	--	SPARE	--	1	20	30
31						8 A	0 A					--	SPARE	--	1	20	32
33	20	2		HVAC LIVING 309-1A	2-#12, 1-#12 - 3/4"C			8 A	8 A			2-#12, 1-#12 - 3/4"C	HVAC BEDROOM 312-1B		2	20	34
35										8 A	8 A						36
37	20	2		HVAC LIVING 310-1A	2-#12, 1-#12 - 3/4"C	8 A	0 A					--	SPARE	--	1	20	38
39								8 A	4 A			2-#12, 1-#12 -	HVAC GUEST LAUNDRY 316		2	20	40
41											4 A						42
					TOTAL LOAD:	5684 VA		6496 VA		5684 VA		NOTES:					
					TOTAL AMPS:	47 A		54 A		47 A							

*** CB TYPE:**
A AFCI
G GFCI
L LOCKABLE
R RED HANDLE

LOAD CLASSIFICATION	CONNECTED LOAD	DEMAND FACTOR	ESTIMATED DEMAND	PANEL TOTALS	
HVAC	17864 VA	75.00%	13398 VA		
				TOTAL CONNECTED LOAD:	17864 VA
				TOTAL ESTIMATED DEMAND LOAD:	13398 VA
				TOTAL CONNECTED CURRENT:	50 A
				TOTAL ESTIMATED DEMAND...	37 A
				DEMAND WITH EXPANSION:	45 A

NAVFAC

COMMONWEALTH OF VIRGINIA
JUSTIN C. CASHWELL
Lic. No.047237
5/4/16
PROFESSIONAL ENGINEER
SEAL

BURNS McDONNELL
1305 EXECUTIVE BLVD.
SUITE 160
CHESAPEAKE, VA 23320
A/E INFO

APPROVED
David Greenfield
FOR COMMANDER NAVFAC / B.L.T.L.

ACTIVITY
PER SAT-TO DOCUMENT FROM GERARD MONTANI (PM&BRANCH HEAD) WITH FEAD AT NAVAL STATION NEWPORT-NEWPORT, RI
SATISFACTORY TO DATE 4/20/16

DES JCC	DRW LAW	CHK KMS
PM / DM	MLW/LEJ	
BRANCH MANAGER		
CHIEF ENG/ARCH	DWG	
FIRE PROTECTION	DPS	

DEPARTMENT OF THE NAVY
NAVAL FACILITIES ENGINEERING COMMAND
NAVAL FACILITIES ENGINEERING COMMAND ~ MID-ATLANTIC
NORTH IPT NEWPORT, RHODE ISLAND
NAVAL STATION NEWPORT NEWPORT, RHODE ISLAND

RENOVATION OF NGIS, BUILDING 172

PANELBOARD SCHEDULES

SCALE: AS NOTED
EPROJECT NO. 13770079
CONSTR. CONTR. NO.
NAVFAC DRAWING NO. 12719568
SHEET 183 OF 200

E-703

DRAWFORM REVISION: 10 MAY 2014

FILE NAME: C:\Revit_Projects\86232-NGIS\Bldg172\Models\MEP86232_E_jccashwell.rvt
REVDATE: 5/2/2016 1:41:11 PM

PANELBOARD: L4

LOCATION: MECH 418
SUPPLY FROM: L
MOUNTING: SURFACE
ENCLOSURE: NEMA 1
VOLTAGE: 120/208 Wye
PHASE: 3
WIRES: 4
A.I.C. RATING: 42000
MAINS TYPE: MCB
MAINS RATING: 225 A
MCB RATING: 150 A

#	BKR	P	*	LOAD SERVED	WIRE AND CONDUIT	A		B		C		WIRE AND CONDUIT	LOAD SERVED	*	P	BKR	#
1	20	1		REC HOUSKEEPING /...	1-#12, 1-#12, 1-#12 - 3/4"C	6 A	8 A					1-#10, 1-#10, 1-#10 - 3/4"C	REC Space 230		1	20	2
3	20	1		LTG 4TH FLR COMMON	1-#2, 1-#2, 1-#2 - 3/4"C			11 A	7 A			1-#10, 1-#10, 1-#10 - 3/4"C	LTG 4TH FLR ROOMS - EAST		1	20	4
5	20	1		REC BREAK ROOM / GENERA...	1-#12, 1-#12, 1-#12 - 3/4"C					2 A	6 A	1-#12, 1-#12, 1-#12 - 3/4"C	REC BREAK ROOM / GENERA...		1	20	6
7	20	1		REC LIVING 408-1A	1-#12, 1-#12, 1-#12 - 3/4"C	2 A	10 A					1-#12, 1-#12, 1-#12 - 3/4"C	Power LIVING 408-1A		1	20	8
9	20	1		REC LIVING 408-1A	1-#12, 1-#12, 1-#12 - 3/4"C			9 A	11 A			1-#6, 1-#6, 1-#6 - 3/4"C	LTG 4TH FLR ROOMS - WEST		1	20	10
11	20	1		REC BEDROOM 408-1B	1-#12, 1-#12, 1-#12 - 3/4"C					9 A	2 A	1-#12, 1-#12, 1-#12 - 3/4"C	REC BATH 408-1C		1	20	12
13	20	1		REC BEDROOM 411-3B	1-#10, 1-#10, 1-#10 - 3/4"C	11 A	6 A					1-#12, 1-#12, 1-#12 - 3/4"C	REC LIVING 411-3A		1	20	14
15	20	1		REC LIVING 411-3A	1-#10, 1-#10, 1-#10 - 3/4"C			10 A	10 A			1-#10, 1-#10, 1-#10 - 3/4"C	REC LIVING 411-3A		1	20	16
17	20	1		REC LIVING 411-3A	1-#10, 1-#10, 1-#10 - 3/4"C					10 A	7 A	2-#12, 1-#12 - 3/4"C	HVAC LIVING 411-3A	2	20		18
19	20	1		REC LIVING 409-1A	1-#10, 1-#10, 1-#10 - 3/4"C	10 A	7 A										20
21	20	1		REC LIVING 409-1A	1-#12, 1-#12, 1-#12 - 3/4"C			2 A	9 A			1-#10, 1-#10, 1-#10 - 3/4"C	REC LIVING 409-1A		1	20	22
23	20	1		REC BEDROOM 409-1B	1-#12, 1-#12, 1-#12 - 3/4"C					9 A	10 A	1-#12, 1-#12, 1-#12 - 3/4"C	REC LIVING 407-1A		1	20	24
25	20	1		REC LIVING 407-1A	1-#12, 1-#12, 1-#12 - 3/4"C	2 A	9 A					1-#12, 1-#12, 1-#12 - 3/4"C	REC LIVING 407-1A		1	20	26
27	20	1		REC BEDROOM 407-1B	1-#12, 1-#12, 1-#12 - 3/4"C			9 A	10 A			1-#12, 1-#12, 1-#12 - 3/4"C	REC LIVING 405-1A		1	20	28
29	20	1		REC LIVING 405-1A	1-#12, 1-#12, 1-#12 - 3/4"C					2 A	2 A	1-#12, 1-#12, 1-#12 - 3/4"C	REC BATH 405-1C		1	20	30
31	20	1		REC BATH 407-1C	1-#12, 1-#12, 1-#12 - 3/4"C	2 A	2 A					1-#12, 1-#12, 1-#12 - 3/4"C	REC BATH 409-1C		1	20	32
33	20	1		REC LIVING 405-1A	1-#12, 1-#12, 1-#12 - 3/4"C			9 A	9 A			1-#12, 1-#12, 1-#12 -	REC BEDROOM 405-1B		1	20	34
35	20	1		REC LIVING 403-1A	1-#12, 1-#12, 1-#12 - 3/4"C					10 A	2 A	1-#12, 1-#12, 1-#12 - 3/4"C	REC LIVING 403-1A		1	20	36
37	20	1		REC LIVING 403-1A	1-#12, 1-#12, 1-#12 - 3/4"C	9 A	9 A					1-#12, 1-#12, 1-#12 - 3/4"C	REC BEDROOM 403-1B		1	20	38
39	20	1		REC BATH 403-1C	1-#12, 1-#12, 1-#12 - 3/4"C			2 A	10 A			1-#12, 1-#12, 1-#12 - 3/4"C	REC LIVING 401-1A		1	20	40
41	20	1		REC LIVING 401-1A	1-#12, 1-#12, 1-#12 - 3/4"C					2 A	9 A	1-#12, 1-#12, 1-#12 - 3/4"C	REC LIVING 401-1A		1	20	42
43	20	1		REC BEDROOM 401-1B	1-#12, 1-#12, 1-#12 - 3/4"C	9 A	2 A					1-#12, 1-#12, 1-#12 - 3/4"C	REC BATH 401-1C		1	20	44
45	20	1		REC LIVING 400-3A	1-#12, 1-#12, 1-#12 - 3/4"C			10 A	10 A			1-#12, 1-#12, 1-#12 - 3/4"C	REC LIVING 400-3A		1	20	46
47	20	1		REC LIVING 400-3A	1-#12, 1-#12, 1-#12 - 3/4"C					10 A	6 A	1-#12, 1-#12, 1-#12 - 3/4"C	REC LIVING 400-3A		1	20	48
49	20	1		REC BATH 400-1C	1-#10, 1-#10, 1-#10 - 3/4"C	13 A	11 A					1-#10, 1-#10, 1-#10 - 3/4"C	REC BEDROOM 400-3B		1	20	50
51	20	1		REC LIVING 402-1A	1-#12, 1-#12, 1-#12 - 3/4"C			10 A	2 A			1-#12, 1-#12, 1-#12 - 3/4"C	REC LIVING 402-1A		1	20	52
53	20	1		REC LIVING 402-1A	1-#12, 1-#12, 1-#12 - 3/4"C					9 A	9 A	1-#12, 1-#12, 1-#12 - 3/4"C	REC BEDROOM 402-1B		1	20	54
55	20	1		REC BATH 402-1C	1-#12, 1-#12, 1-#12 - 3/4"C	2 A	10 A					1-#12, 1-#12, 1-#12 - 3/4"C	REC LIVING 404-1A		1	20	56
57	20	1		REC LIVING 404-1A	1-#12, 1-#12, 1-#12 - 3/4"C			2 A	9 A			1-#12, 1-#12, 1-#12 - 3/4"C	REC LIVING 404-1A		1	20	58
59	20	1		REC BATH 404-1C	1-#12, 1-#12, 1-#12 - 3/4"C					2 A	9 A	1-#12, 1-#12, 1-#12 - 3/4"C	REC BEDROOM 404-1B		1	20	60
61	20	1		REC LIVING 410-1A	1-#12, 1-#12, 1-#12 - 3/4"C	10 A	2 A					1-#12, 1-#12, 1-#12 -	REC LIVING 410-1A		1	20	62
63	20	1		REC LIVING 410-1A	1-#12, 1-#12, 1-#12 -			9 A	9 A			1-#10, 1-#10, 1-#10 - 3/4"C	REC BEDROOM 410-1B		1	20	64
65	20	1		REC BATH 410-1C	1-#12, 1-#12, 1-#12 - 3/4"C					2 A	10 A	1-#10, 1-#10, 1-#10 - 3/4"C	REC LIVING 412-1A		1	20	66
67	20	1		REC LIVING 412-1A	1-#12, 1-#12, 1-#12 - 3/4"C	2 A	9 A					1-#10, 1-#10, 1-#10 - 3/4"C	REC LIVING 412-1A		1	20	68
69	20	1		REC BEDROOM 412-1B	1-#10, 1-#10, 1-#10 - 3/4"C			9 A	2 A			1-#12, 1-#12, 1-#12 - 3/4"C	REC BATH 412-1C		1	20	70
71	20	1		REC BEDROOM 406-4A	1-#12, 1-#12, 1-#12 - 3/4"C					11 A	8 A	1-#12, 1-#12, 1-#12 - 3/4"C	REC BEDROOM 406-4A		1	20	72
73	20	1		REC BEDROOM 406-4A	1-#12, 1-#12, 1-#12 - 3/4"C	10 A	13 A					1-#12, 1-#12, 1-#12 - 3/4"C	REC BATH 406-4B		1	20	74
75	20	1		REC	1-#12, 1-#12, 1-#12 -			2 A	0 A			--	SPARE	--	1	20	76
77	20	1	--	SPARE	--					0 A	0 A	--	SPARE	--	1	20	78
79	20	1	--	SPARE	--	0 A	0 A					--	SPARE	--	1	20	80
81	20	1	--	SPARE	--			0 A	0 A			--	SPARE	--	1	20	82
83	20	1	--	SPARE	--					0 A	0 A	--	SPARE	--	1	20	84

	A	B	C
TOTAL LOAD:	21428 VA	22697 VA	18248 VA
TOTAL AMPS:	183 A	193 A	152 A

*** CB TYPE:**
A AFCI
G GFCI
L LOCKABLE
R RED HANDLE

NOTES:

LOAD CLASSIFICATION	CONNECTED LOAD	DEMAND FACTOR	ESTIMATED DEMAND	PANEL TOTALS	
HVAC	1456 VA	75.00%	1092 VA		
Receptacle (Hotel)	57420 VA	43.48%	24968 VA	**TOTAL CONNECTED LOAD:**	62374 VA
LTG	3498 VA	50.00%	1749 VA	**TOTAL ESTIMATED DEMAND LOAD:**	27809 VA
				TOTAL CONNECTED CURRENT:	173 A
				TOTAL ESTIMATED DEMAND...	77 A
				DEMAND WITH EXPANSION:	93 A

PANELBOARD: AC4

LOCATION: MECH 418
SUPPLY FROM: HVAC
MOUNTING: SURFACE
ENCLOSURE: NEMA 1
VOLTAGE: 120/208 Wye
PHASE: 3
WIRES: 4
A.I.C. RATING: 42000
MAINS TYPE: MCB
MAINS RATING: 100 A
MCB RATING: 100 A

#	BKR	P	*	LOAD SERVED	WIRE AND CONDUIT	A		B		C		WIRE AND CONDUIT	LOAD SERVED	*	P	BKR	#
1	20	2		HVAC - Cooling BREAK ROOM / GENERAL STORAGE 417	2-#12, 1-#12 - 3/4"C	12 A	1 A					1-#12, 1-#12, 1-#12 - 3/4"C	REC STAIRS 422		1	20	2
3								12 A	4 A			2-#12, 1-#12 - 3/4"C	HVAC HOUSKEEPING / STORAGE 423		2	20	4
5	20	1		HVAC - Heating STAIRS 421	1-#12, 1-#12, 1-#12 - 3/4"C					1 A	4 A						6
7	20	1		HVAC - Heating STAIRS 415	1-#12, 1-#12, 1-#12 - 3/4"C	1 A	7 A					2-#12, 1-#12 - 3/4"C	HVAC BEDROOM 411-3B		2	20	8
9	20	1		REC BATH 411-3C	1-#8, 1-#8, 1-#8 - 3/4"C			13 A	7 A								10
11	20	2		HVAC - Cooling LIVING 408-1A	2-#12, 1-#12 - 3/4"C					8 A	8 A	2-#12, 1-#12 - 3/4"C	HVAC BEDROOM 409-1B		2	20	12
13						8 A	8 A										14
15	20	2		HVAC Room 407-1A, 407-1B	2-#12, 1-#12 - 3/4"C			8 A	8 A			2-#12, 1-#12 - 3/4"C	HVAC Room 405-1A, 405-1B		2	20	16
17										8 A	8 A						18
19	20	2		HVAC Room 403-1A, 403-1B	2-#12, 1-#12 - 3/4"C	8 A	8 A					2-#12, 1-#12 - 3/4"C	HVAC Room 401-1A, 401-1B		2	20	20
21								8 A	8 A								22
23	20	2		HVAC LIVING 400-3A	2-#12, 1-#12 - 3/4"C					6 A	6 A	2-#12, 1-#12 - 3/4"C	HVAC BEDROOM 400-3B		2	20	24
25						6 A	6 A										26
27	20	2		HVAC Room 402-1A, 402-1B	2-#12, 1-#12 - 3/4"C			8 A	8 A			2-#12, 1-#12 - 3/4"C	HVAC Room 404-1A, 404-1B		2	20	28
29										8 A	8 A						30
31	20	2		HVAC Room 410-1A, 410-1B	2-#12, 1-#12 - 3/4"C	8 A	8 A					2-#12, 1-#12 - 3/4"C	HVAC Room 412-1A, 412-1B		2	20	32
33								8 A	8 A								34
35	20	2		HVAC BEDROOM 406-4A	2-#12, 1-#12 - 3/4"C					4 A	4 A	2-#12, 1-#12, 1-#12 -	HVAC SUPPLY STORAGE 416		2	20	36
37						4 A	4 A										38
39	20	1	--	SPARE	--			0 A	0 A			--	SPARE	--	1	20	40
41	20	1	--	SPARE	--					0 A	0 A	--	SPARE	--	1	20	42

	A	B	C
TOTAL LOAD:	8946 VA	10337 VA	7357 VA
TOTAL AMPS:	77 A	88 A	61 A

*** CB TYPE:**
A AFCI
G GFCI
L LOCKABLE
R RED HANDLE

NOTES:

LOAD CLASSIFICATION	CONNECTED LOAD	DEMAND FACTOR	ESTIMATED DEMAND	PANEL TOTALS	
HVAC	24960 VA	75.00%	18720 VA		
Receptacle (Hotel)	1500 VA	50.00%	750 VA	**TOTAL CONNECTED LOAD:**	26640 VA
HVAC - Heating	180 VA	80.00%	144 VA	**TOTAL ESTIMATED DEMAND LOAD:**	19614 VA
				TOTAL CONNECTED CURRENT:	74 A
				TOTAL ESTIMATED DEMAND...	54 A
				DEMAND WITH EXPANSION:	65 A

PANELBOARD: FA1

LOCATION: ELECTRICAL RM 003
SUPPLY FROM: SWBD MSBD
MOUNTING: SURFACE
ENCLOSURE: NEMA 1
VOLTAGE: 120/208 Wye
PHASE: 3
WIRES: 4
A.I.C. RATING: 22000
MAINS TYPE: MLO
MAINS RATING: 100 A
MCB RATING:

#	BKR	P	*	LOAD SERVED	WIRE AND CONDUIT	A		B		C		WIRE AND CONDUIT	LOAD SERVED	*	P	BKR	#
1	20	1	R	FACP FIRE ALARM 124	1-#12, 1-#12, 1-#12 - 3/4"C	1 A	1 A					1-#12, 1-#12, 1-#12 - 3/4"C	NAC FIRE ALARM 124	R	1	20	2
3	20	1	R	FTS FIRE ALARM 124	1-#12, 1-#12, 1-#12 - 3/4"C			1 A	1 A			1-#12, 1-#12, 1-#12 - 3/4"C	NAC FIRE ALARM 224	R	1	20	4
5	20	1	R	Power FIRE ALARM 224	1-#12, 1-#12, 1-#12 - 3/4"C					2 A	1 A	1-#12, 1-#12, 1-#12 - 3/4"C	NAC FIRE ALARM 324	R	1	20	6
7	20	1	R	Power FIRE ALARM 324	1-#12, 1-#12, 1-#12 - 3/4"C	2 A	2 A					1-#12, 1-#12, 1-#12 - 3/4"C	Power FIRE ALARM 424	R	1	20	8
9	20	1	R	NAC FIRE ALARM 424	1-#12, 1-#12, 1-#12 - 3/4"C			1 A	0 A			--	SPARE	--	1	20	10
11	20	1	--	SPARE	--					0 A	0 A	--	SPARE	--	1	20	12
13	20	1	--	SPARE	--	0 A	0 A					--	SPARE	--	1	20	14
15	20	1	--	SPARE	--			0 A	0 A			--	SPARE	--	1	20	16
17	20	1	--	SPARE	--					0 A	0 A	--	SPARE	--	1	20	18
19	20	1	--	SPARE	--	0 A	0 A					--	SPARE	--	1	20	20
21	20	1	--	SPARE	--			0 A	0 A			--	SPARE	--	1	20	22
23	20	1	--	SPARE	--					0 A	0 A	--	SPARE	--	1	20	24
25	20	1	--	SPARE	--	0 A	0 A					--	SPARE	--	1	20	26
27	20	1	--	SPARE	--			0 A	0 A			--	SPARE	--	1	20	28
29	20	1	--	SPARE	--					0 A	0 A	--	SPARE	--	1	20	30

	A	B	C
TOTAL LOAD:	560 VA	300 VA	280 VA
TOTAL AMPS:	5 A	3 A	2 A

*** CB TYPE:**
A AFCI
G GFCI
L LOCKABLE
R RED HANDLE

NOTES:

LOAD CLASSIFICATION	CONNECTED LOAD	DEMAND FACTOR	ESTIMATED DEMAND	PANEL TOTALS	
Power	540 VA	100.00%	540 VA		
				TOTAL CONNECTED LOAD:	540 VA
				TOTAL ESTIMATED DEMAND LOAD:	540 VA
				TOTAL CONNECTED CURRENT:	1 A
				TOTAL ESTIMATED DEMAND...	1 A
				DEMAND WITH EXPANSION:	2 A

SYM	DESCRIPTION	DATE	APPR

NAVFAC

COMMONWEALTH OF VIRGINIA
JUSTIN C. CASHWELL
Lic. No.047237
5/4/16
PROFESSIONAL ENGINEER
SEAL

BURNS McDONNELL
1305 EXECUTIVE BLVD.
SUITE 160
CHESAPEAKE, VA 23320
A/E INFO.

APPROVED
David W. Grunfeld
FOR COMMANDER NAVFAC / B.L.T.L.

ACTIVITY
PER SAT-TO DOCUMENT FROM GERARD MONTANI (PM&BRANCH HEAD) WITH FEAD AT NAVAL STATION NEWPORT-NEWPORT, RI
SATISFACTORY TO DATE 4/20/16

DES	JCC	DRW	LAW	CHK	KMS
PM / DM	MLW/LEJ				
BRANCH MANAGER					
CHIEF ENG/ARCH		DWG			
FIRE PROTECTION					

DEPARTMENT OF THE NAVY
NAVAL FACILITIES ENGINEERING COMMAND
NORTH IPT
NAVAL FACILITIES ENGINEERING COMMAND ~ MID-ATLANTIC
NAVAL STATION NEWPORT
NEWPORT, RHODE ISLAND

RENOVATION OF NGIS, BUILDING 172

PANELBOARD SCHEDULES

SCALE: AS NOTED
EPROJECT NO. 13770079
CONSTR. CONTR. NO.
NAVFAC DRAWING NO. 12719569
SHEET 184 OF 200

E-704

DRAWFORM REVISION: 10 MAY 2014

FILE NAME: C:\Revit_Projects\86232-NGISBldg172\Models\MEP\86232_E_jccashwell.rvt
REV/DATE: 5/2/2016 1:41:12 PM