REVISION				
SYM	DESCRIPTION	PREP'D BY	DATE	APPROVED

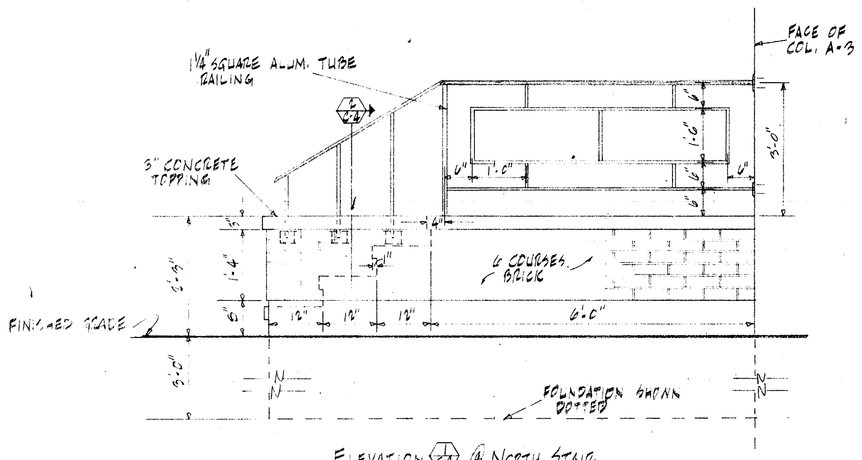

ELEVATION 2/C-4 @ NORTH STAIR
3/4" = 1'-0"

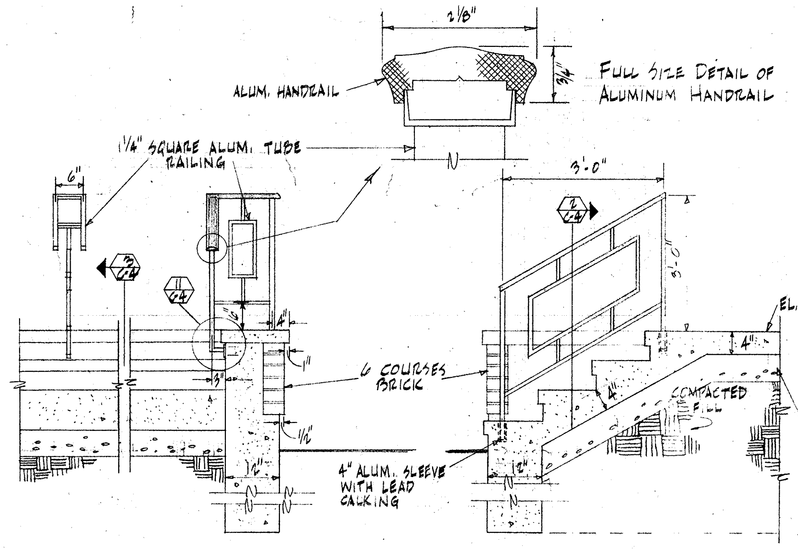

SECTION 3/C-4
3/4" = 1'-0"

SECTION 4/C-4
3/4" = 1'-0"

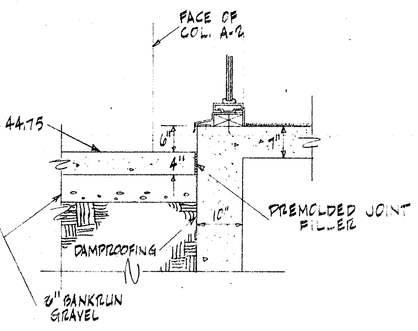

SECTION 4/C-4 @ WINDOW WALL
3/4" = 1'-0"

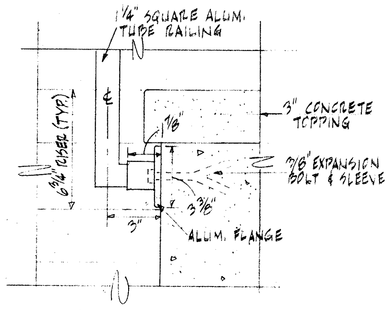

DETAIL 4/C-4
3" = 1'-0"

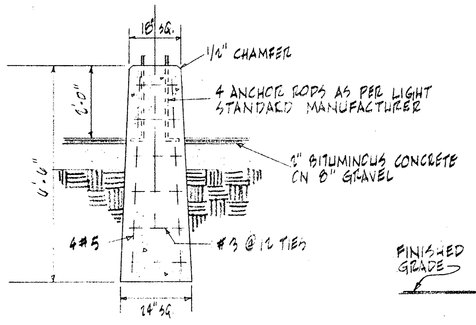

LIGHT STANDARD FOOTING FOR FIXTURE TYPE "N"

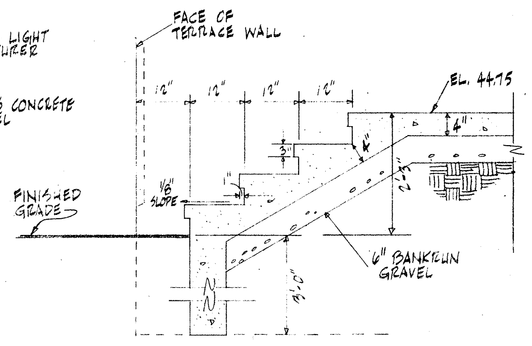

SECTION 5/C-4 @ TERRACE STAIRS
3/4" = 1'-0"

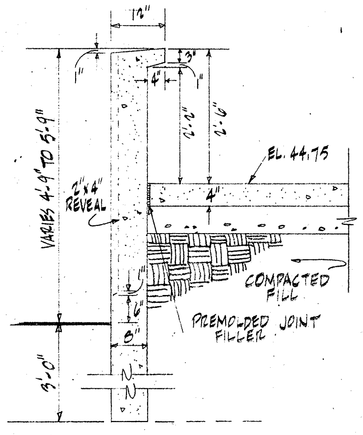

TYPICAL SECTION 7/C-4 @ TERRACE WALL
3/4" = 1'-0"

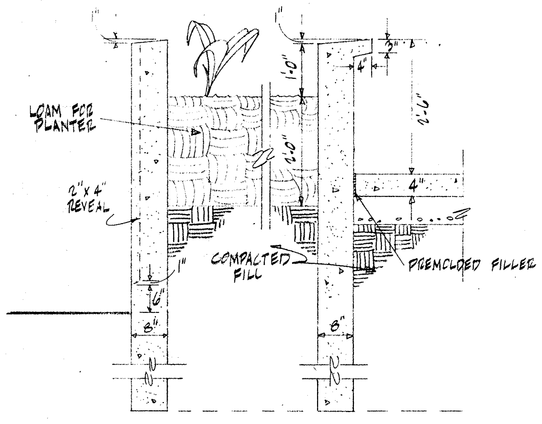

TYPICAL SECTION 6/C-4 @ PLANTER
3/4" = 1'-0"

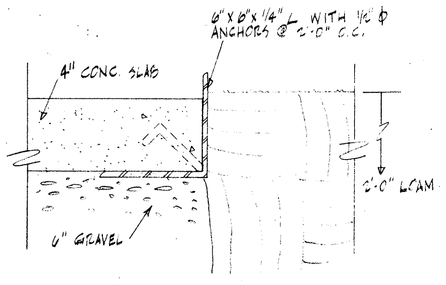

SECTION 5/C-4 @ TERRACE LEVEL PLANTER
3" = 1'-0"

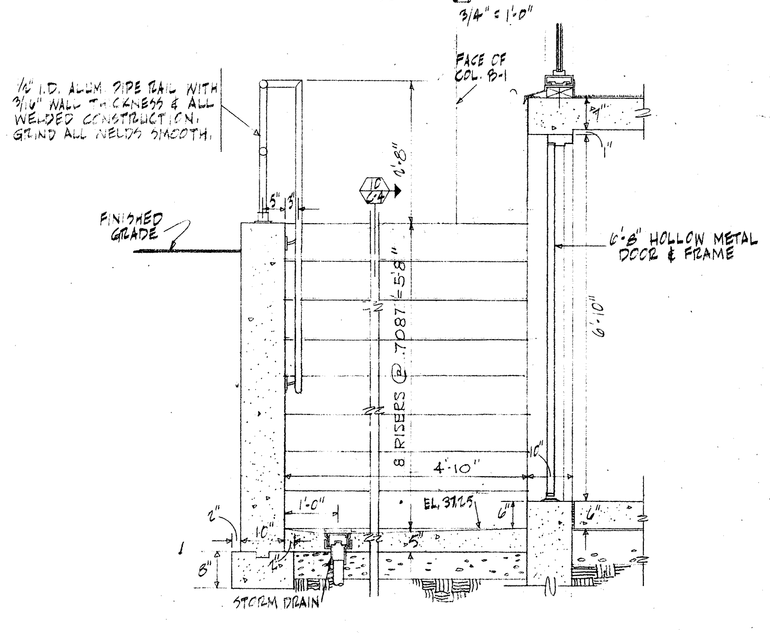

SECTION 1/C-4 @ STAIR WELL TO MECHANICAL ROOM
3/4" = 1'-0"

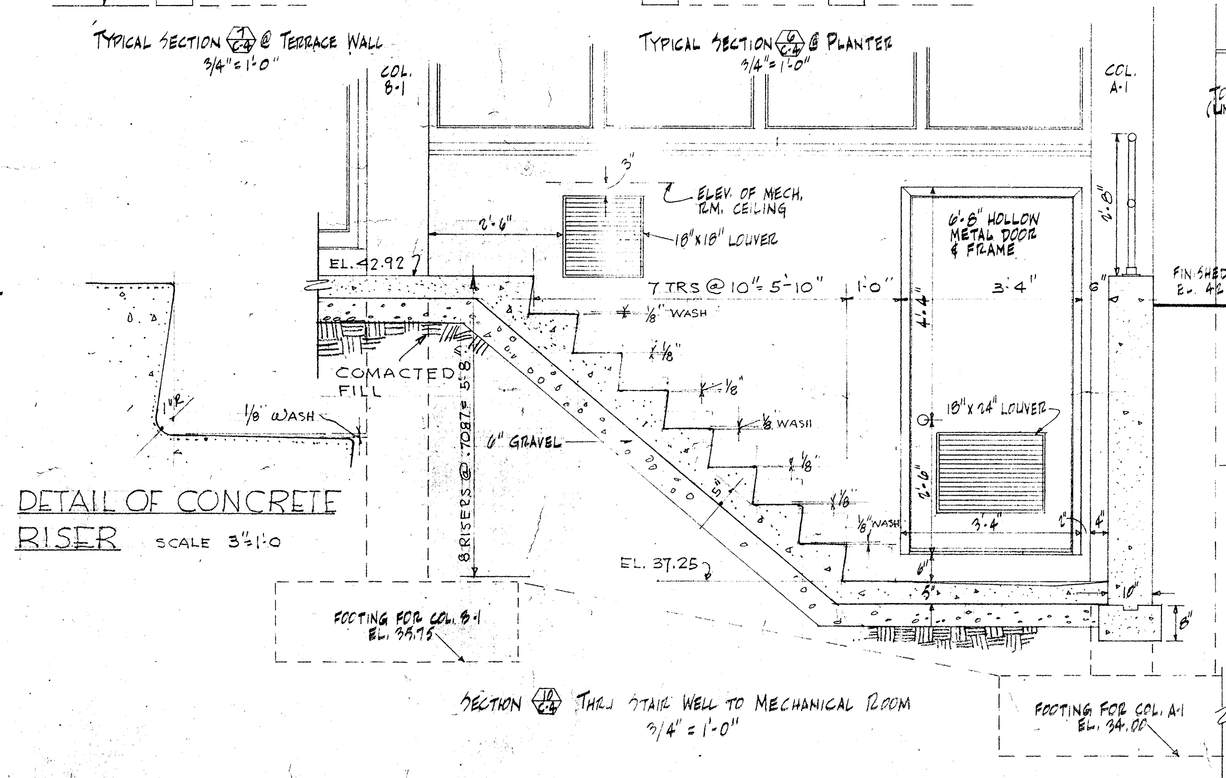

DETAIL OF CONCRETE RISER
SCALE 3" = 1'-0

SECTION 2/C-4 THRU STAIR WELL TO MECHANICAL ROOM
3/4" = 1'-0"

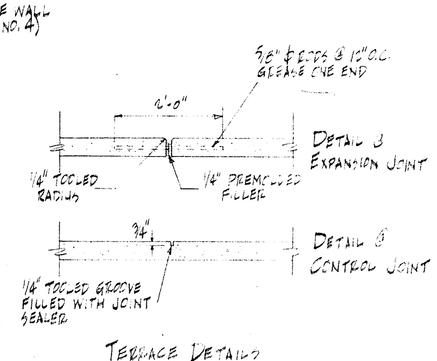

TERRACE DETAILS
3/4" = 1'-0"

GRAPHIC SCALES
3/4" = 1'-0"
3" = 1'-0"

EFD NO. NBN-245		DEPARTMENT OF THE NAVY NAVAL FACILITIES ENGINEERING COMMAND NORTHEAST DIVISION BOSTON, MASS.
DES CIRILLO	FIRE PROT HOLBROOK	
DRG GRANSFIELD	SAF ENGR HOLBROOK	NAVAL SCHOOL COMMAND NEWPORT R.I.
CHK	SAN ENGR	WAVES B.O.Q. SITE DETAILS CIVIL C-4
SUP		
PROJ ENGR J.A. CIRILLO		
DIRECTOR OCONNELL		
APPROVED DATE CFD FOR COMMANDER NEDC	CODE IDENT NO 80091	SIZE F
	SCALE GRAPHIC	SPEC 90540/80
		FED DRAWING NO. CONST. CONTR. NO N62472-80-B-0013
		SHEET 4 OF 4-1

PWC Dwg. No. 18015-187