REVISION				
SYM	DESCRIPTION	PREP'D BY	DATE	APPROVED

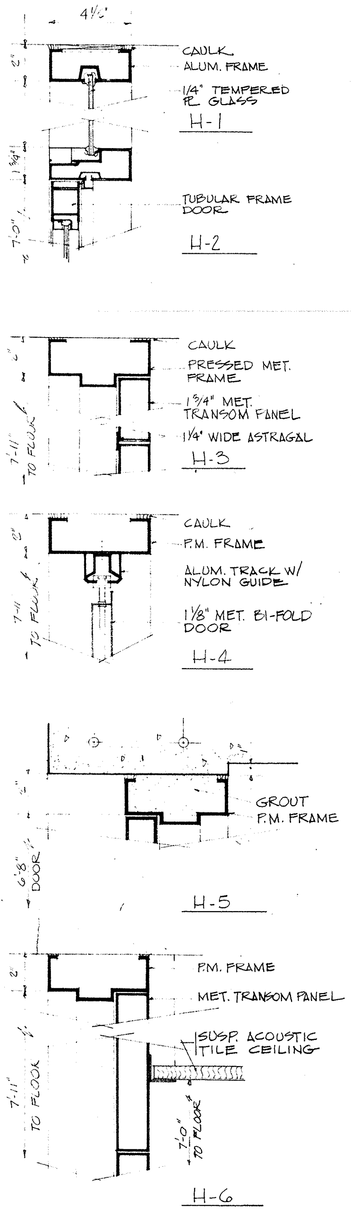

DOOR SCHEDULE

NO.	DOOR SIZE	DOOR TYPE	LABEL	FRAME TYPE	FRAME DEPTH	FRAME HEAD	LINTEL	THRES-HOLD	REMARKS
1	PR. 2'-6" x 7'-0"	AL-1	-	J-4	4 1/2"	H-2, H-7	-	T-1	
2	PR. 3'-0" x 6'-10"	AL-2	-	5/A-8	4 1/2"	7/A-8	-	6/A-8	
3	3'-0" x 7'-0"	HM-1	B	J-3	5 3/4"	H-3	-	T-2	1 1/2 HR. FIRE RATING
4	3'-0" x 7'-0"	AL-3	-	2/A-15	4 1/2"	H-1, H-2	-	T-1	2/A-15 3/A-15
5	2'-6" x 7'-0"	HM-1	-	J-1	5 5/8"	H-3	-	T-6	
6	2'-6" x 7'-0"	HM-1	-	J-2, J-6	5 5/8"	H-3	-	T-3	
7	2'-6" x 7'-0"	HM-1	-	J-2	5 5/8"	H-3	-	T-3	
8	2'-6" x 7'-0"	HM-1	-	J-2	5 5/8"	H-3	-	T-3	
9	2'-2" x 6'-8"	HM-1	-	J-2	5 5/8"	H-6	-	T-4	
10	2'-2" x 6'-8"	HM-1	-	J-1	5 7/8"	H-6	-	T-4	
11	2'-2" x 6'-8"	HM-1	-	J-1	5 7/8"	H-6	-	T-4	
12	3'-0" x 8'-0"	BF-2	-	J-7	5 5/8"	H-4	-	T-8	
13	3'-0" x 7'-0"	HM-2	-	J-1	5 7/8"	H-3	-	T-5	
14	3'-0" x 7'-0"	HM-1	B	J-1	5 7/8"	H-3	-	T-6	1 HR. FIRE RATING
15	4'-0" x 8'-0"	BF-1	-	J-7	5 5/8"	H-4	-	T-9	
16	2'-2" x 6'-8"	HM-1	-	J-2	5 5/8"	H-6	-	T-4	
17	3'-0" x 7'-0"	HM-1	B	J-1	5 7/8"	H-3	-	T-2	1 HR. FIRE RATING
18	2'-6" x 7'-0"	HM-1	B	J-1	5 7/8"	H-3	-	T-2	1 HR. " "
19	3'-0" x 7'-0"	HM-1	B	J-3	5 3/4"	H-3	-	T-2	1½ HR. " "
20	3'-0" x 7'-0"	AL-3	-	4/A-15	4 1/2"	H-1, H-2	-	T-1	3/A-15
21	3'-0" x 7'-0"	HM-1	B	J-3	5 3/4"	H-3	-	T-2	1½ HR. FIRE RATING
22	3'-0" x 7'-0"	HM-1	B	J-1	5 7/8"	H-3	-	T-2	1 HR. " "
23	3'-0" x 7'-0"	HM-1	B	J-1, J-6	5 7/8"	H-3	-	T-5	1 HR. " "
24	2'-6" x 7'-0"	HM-1	B	J-1	5 7/8"	H-3	-	T-2	1 HR. " "
25	3'-0" x 7'-0"	HM-1	B	J-1	5 7/8"	H-3	-	T-2	1 HR. " "
26	3'-0" x 7'-0"	HM-1	B	J-3	5 3/4"	H-3	-	T-2	1½ HR. " "
27	3'-0" x 6'-8"	HM-3	-	J-5	5 3/4"	H-5	-	T-7	

NOTES:

1) FRAMES AT MASONRY & CONCRETE WALLS SHALL BE GROUT FILLED.
2) LABELLED RATING MUST INCLUDE METAL TRANSOM PANEL.

FINISH SCHEDULE

	MARK	SPACE TITLE	FLOOR MATERIAL	FLOOR FINISH	BASE MATERIAL	WALLS MATERIAL	WALLS FINISH	CEILING MATERIAL	CEILING FINISH	HGT.	REMARKS
			1 CONCRETE	2 GREY CERAMIC	3 CONCRETE WITH CARPET BY GOVT.	4 VINYL ASBESTOS TILE	5 RUBBER MAT	6	7	8	
			9	10 4" BLACK VINYL	11 PASTEL YELLOW CERAMIC TILE	12 4" PAINTED BLACK	13 NONE	14	15	16	
			17 GYPSUM WALLBOARD	18 MASONRY BLOCKS	19 KATCH PASTEL YELLOW CERAMIC TILE	20 CONCRETE	21	22	23	24	
			25 PAINTED	26 CONCRETE	27 SUSPENDED ACOUSTIC TILE	28	29	30 PAINTED	31 FLOOR TO FINISHED CEIL.	32	
B2 UNIT	A	LIVING ROOM / BEDROOM		4		8		12		16 17 18 19	8'-1"
	B	BATH	2		9			12•	14	16 18■ 19	7'-0"
	C	CLOSET		4	11			12	15	16 17 18 19	8'-1"
	B01	MECHANICAL RM.	1		11				15	16 17 19	6'-11"
	117	SDO/ASDO BED ROOM		4		8		12		16 17 19	8'-1"
	118	MAA OFFICE		4		8		12		16 17 19	8'-1"
	119	MASTER OF ARMS		4		8		12		16 17 19	8'-1"
	120	SDO/ASDO TOILET	2		9			12•	14	16 18■	7'-0"
	121	MENS TOILET	2		9			12•	14	16 18■	7'-0"
	122	LAUNDRY PICK-UP		4		8		12		16 17 19	8'-1"
	123	TELEPHONE RM		4		8		12		16 17 19	8'-1"
	124	VEND. MACHINE RM		4		8		12		16 17 19	8'-1"
	125	WOMENS TOILET	2		9			12•	14	16 18■	7'-0"
	126	LOBBY		3		8		12		16 17 19	8'-1"
	127	LOUNGE		3		8		12		16 17 19	8'-1"
	128	VESTIBULE	1	5		8		12		16 17 19	9'-10"
	129	STORAGE RM.	1		10			12		16 17 19	8'-1"
	130	CLEANING GEAR	1		10			12		16 17 19	8'-1"
	131	CORRIDOR		3		8		12		16 17 19	8'-1"
	-23	STORAGE & FAN RM	1		10			12		16 17 19	8'-1"
	-24	LOUNGE		3		8		12		16 17 18 19	8'-1" 7'-0" CLEAR HEADROOM UNDER SUSPENDED BEAMS AS SHOWN ON DRWG NO. 1,297,661
	-25	CORRIDOR		3		8		12		16 17 18 19	8'-1"
	-26	STORAGE & LAUNDRY RM	1		10			12•		16 17 18■ 19	8'-1"
	-27	CLEANING GEAR	1		10			12		16 17 18■ 19	8'-1"
		STAIR NO 1	1		10			13	15	16 17 19	—
		STAIR NO 2	1		10			13	15	16 17 19	—

• WATER RESISTENT GYPSUM WALLBOARD ■ PLASTIC FACED ACOUSTIC TILE

NOTES:

1. ALL ROOMS & CORRIDOR CEILINGS ON 5TH FLOOR SHALL BE SUSPENDED ACOUSTIC TILE.
2. GOVT. SHALL FURNISH CONTRACTOR A COLOR SCHEDULE OF 4 BASIC SCHEMES AT A LATER DATE.
3. REFER TO FLOOR PLAN FOR LOCATION OF 5/8" GYPSUM WALLBOARD ON STEEL STUD.

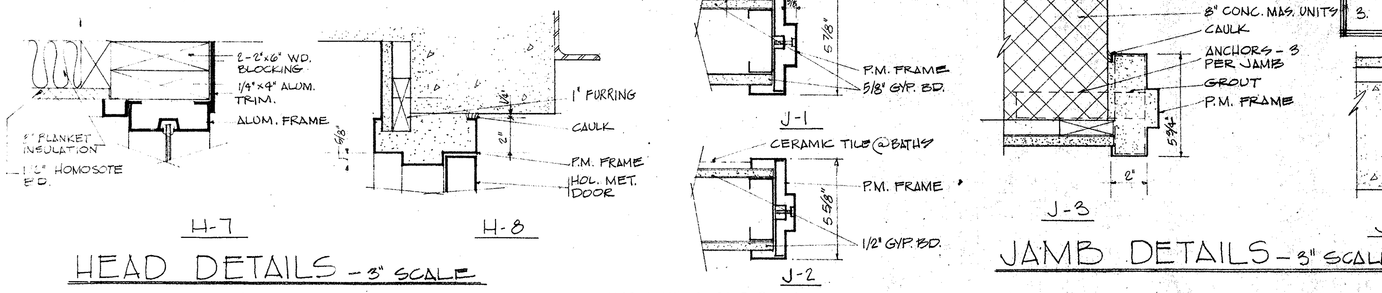

HEAD DETAILS - 3" SCALE

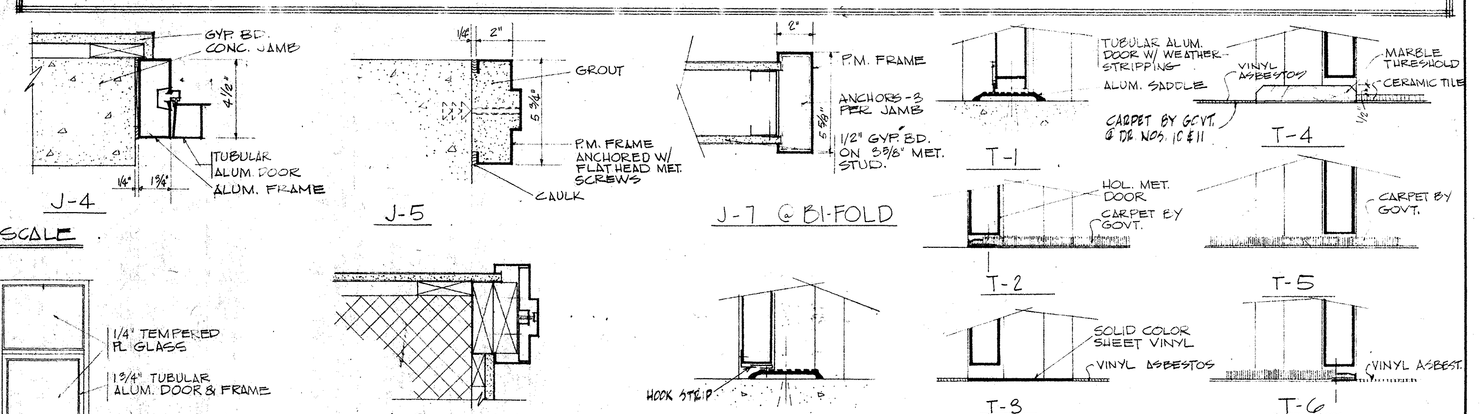

JAMB DETAILS - 3" SCALE

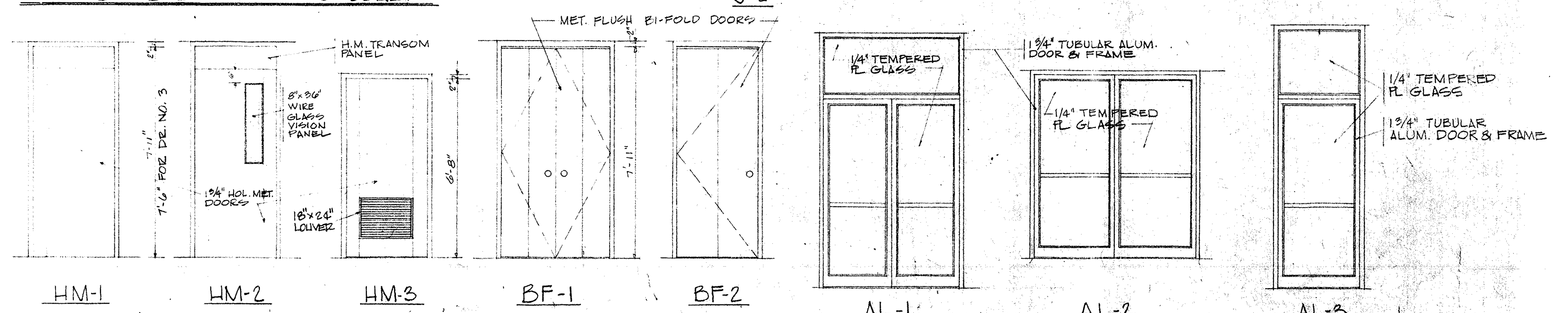

DOOR ELEVATIONS (SEE SCHEDULE FOR SIZES)

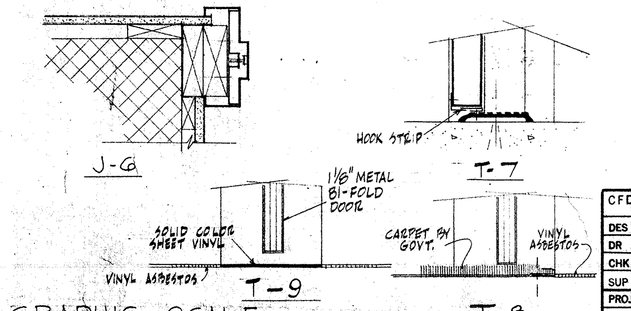

THRESHOLD DETAILS - 3" SCALE

GRAPHIC SCALE

3/8" = 1'-0"
3" = 1'-0"

CFD NO. NBN-245		DEPARTMENT OF THE NAVY NAVAL FACILITIES ENGINEERING COMMAND NORTHEAST DIVISION BOSTON, MASS.	
DES CIRILLO	FIRE PROT HOLBROOK	NAVAL SCHOOL COMMAND NEWPORT, R.I.	
DR CIRILLO	SAF ENGR HOLBROOK	WAVES B.O.Q.	
CHK	SAN ENGR	DOOR/FINISH SCHEDULE & DETAILS	
SUP		ARCHITECTURAL A-12	
PROJ ENGR. J.A. CIRILLO			
DIRECTOR G. COMINELLI			
APPROVED C.S. Hatch Jr. FOR THE COMMANDER	DATE 9/22/69	CODE IDENT NO 80091	SIZE F
		FEC DRAWING NO. 1297672	
		CONST. CONTR. NO. N62464-68-C-0108	
		SCALE GRAPHIC	SPEC 90596/68
		SHEET 16 OF 41	

PWC Dwg. No. 18027-187