NOTES

1. PIPING & FIXTURES SHALL BE PROVIDED FOR INTERMEDIATE FLOORS AS REQUIRED FOR A COMPLETE INSTALLATION IN ACCORDANCE WITH APPLICABLE BID ITEMS AS FOLLOW:
   a. BID ITEM 1 - 4 STORY BLDG. 152'-4" LG.
   b. BID ITEM 2 - 5 STORY BLDG. 152'-4" LG.
   c. BID ITEM 3A - 5 STORY BLDG. 165'-8" LG.
   d. BID ITEM 3B - 4 STORY BLDG. 165'-8" LG.
2. PIPING ARRGT FOR INTERMEDIATE FLOORS IS SIMILAR TO THAT SHOWN FOR 2ND FLR. UNLESS NOTED OTHERWISE
3. (A) FOR "LEGEND" KITCHEN UNITS SEE FEC DWG. NO. 1,297,685.
4. (B) DO NOT PROVIDE KITCHEN UNITS INCLUDING BRANCH WATER, VENT & SANITARY PIPING IN ROOMS 115A & 116A (1ST FL.) & ROOMS 03A & 04A (2ND THRU 5TH FLRS).

REVISION				
SYM	DESCRIPTION	PREP'D BY	DATE	APPROVED
A	ADDED PIPING FOR KITCHEN UNITS & NOTE NO. 3	LEVENTHAL	9-15-69	E.J.M
B	NOTES, NEW KITCHEN UNITS & PIPING ADDED; NEW & FUTURE KITCHEN UNITS DELETED; AMEND. NO. 3	SHANNON	12-1-69	

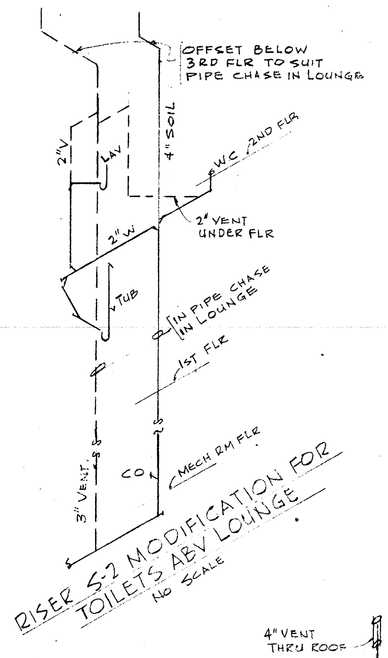

RISER S-2 MODIFICATION FOR TOILETS ABV LOUNGE
NO SCALE

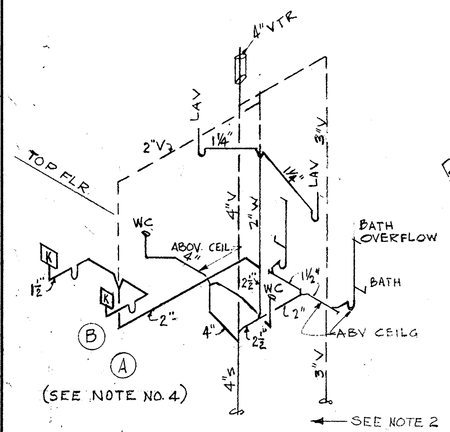

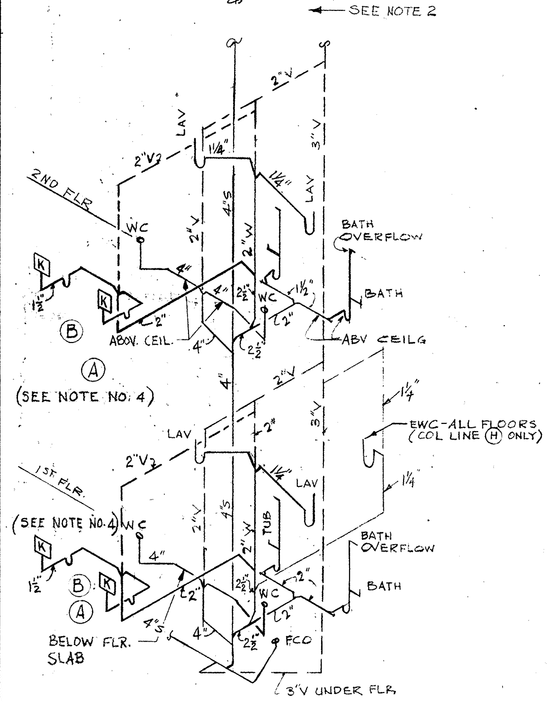

RISER S-1
TYPICAL FOR LR/BR UNITS
WITH BACK-TO-BACK TOILETS
NO SCALE
(SEE NOTE 1)

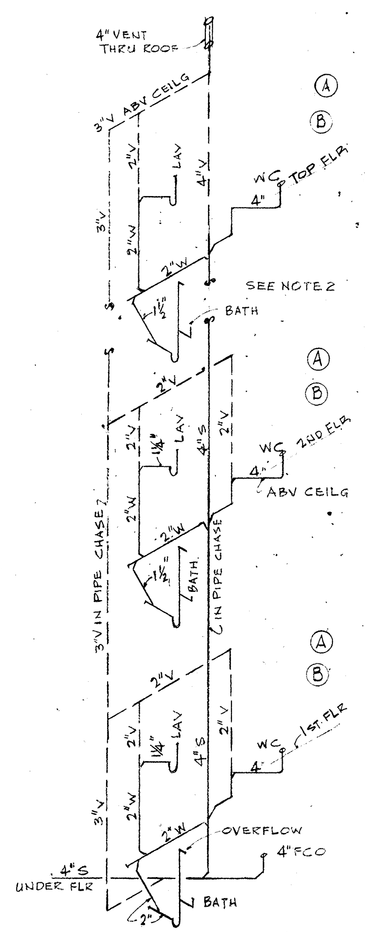

RISER S-2
TYPICAL FOR LR/BR UNITS
W/O BACK-TO-BACK TOILETS
NO SCALE
(SEE NOTE 1)

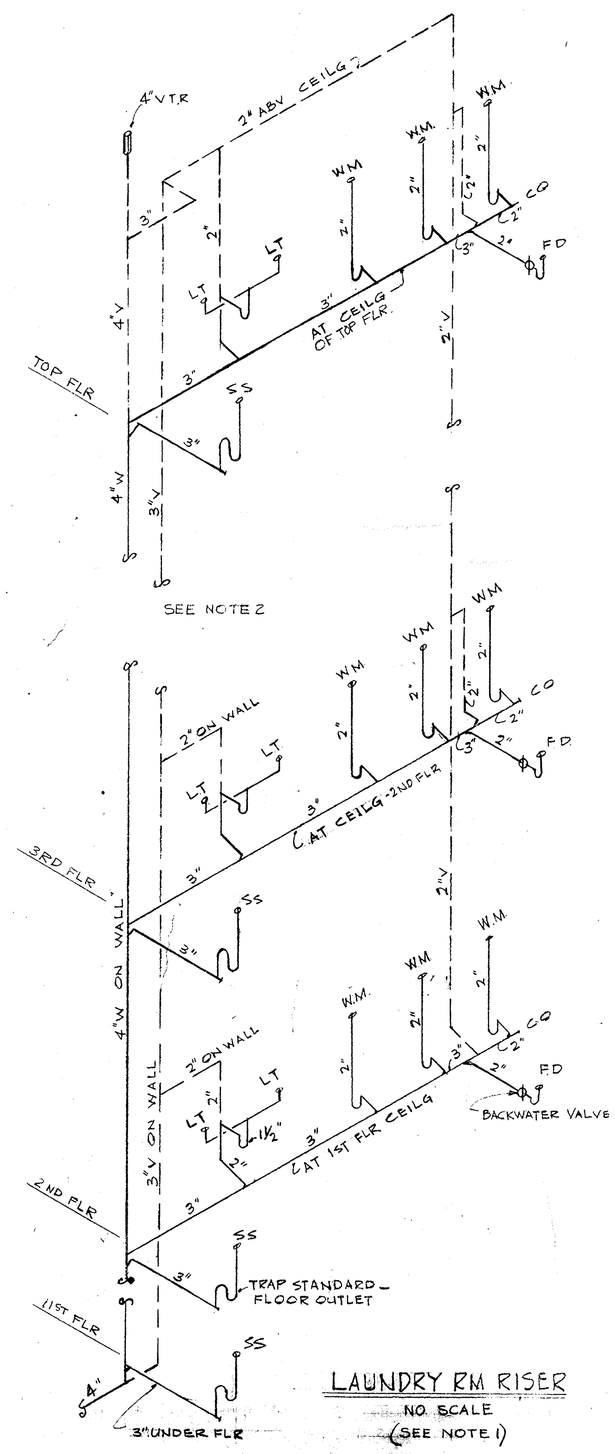

LAUNDRY RM RISER
NO SCALE
(SEE NOTE 1)

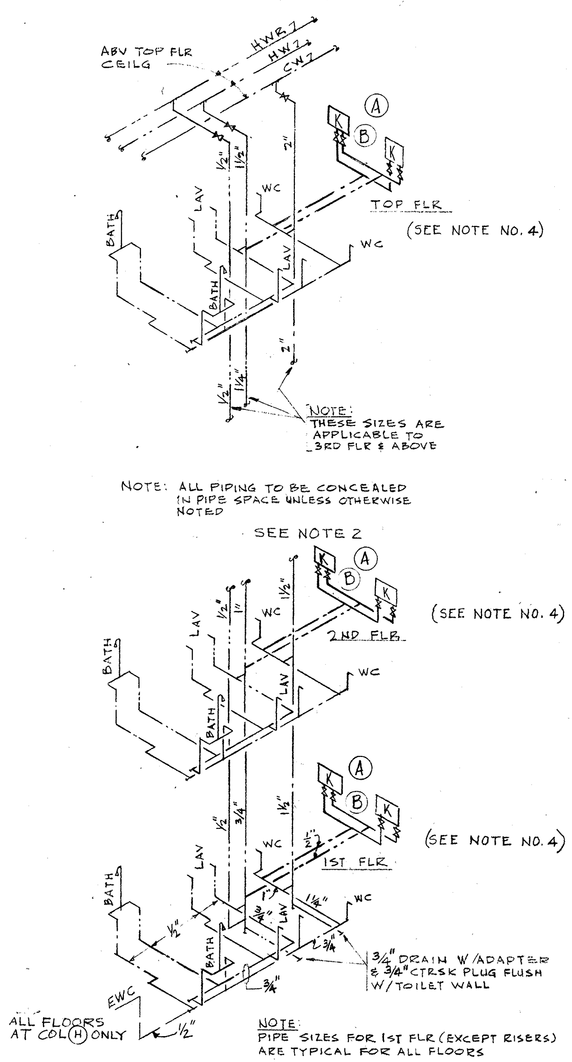

RISER W-1
TYPICAL FOR LR/BR UNITS
W/BACK-TO-BACK TOILETS
NO SCALE
(SEE NOTE 1)

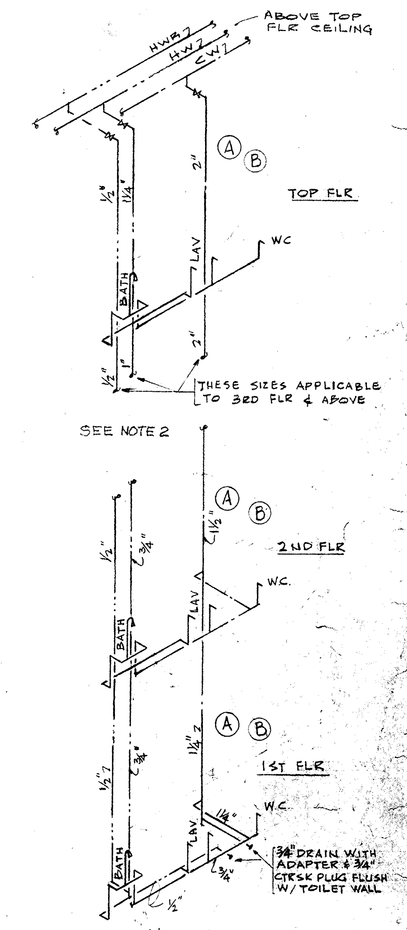

RISER W-2
TYPICAL FOR LR/BR UNITS
W/O BACK-TO-BACK TOILETS
NO SCALE
SEE NOTE 1

PWC DWG. NO. 18043-187

DIVISION NO.		DEPARTMENT OF THE NAVY — BUREAU OF YARDS & DOCKS — NORTHEAST DIVISION, BOSTON, MASS.
DES HPM	FIRE PROT HOLBROOK	NAVAL SCHOOL COMMAND NEWPORT, R.I.
DR HPM	SAF ENGR HOLBROOK	WAVES B.O.Q.
CHK	SAN ENGR	RISER DIAGRAMS WATER & WASTE
SUP E.J.M.		
PROJ ENGR J.A. CIRILLO		
DIRECTOR O'CONNELL		
APPROVED (DIRECTOR FOR CHIEF OF BUREAU)	DATE 4/12/71	

CODE IDENT NO	SIZE	F.E.C. DRAWING NO.
80091	F	1,297,688
SCALE	SPEC 90596/68	CONST CONTR NO. N62461-68-C-0102 SHEET 32 OF 41

SATISFACTORY TO

DATE