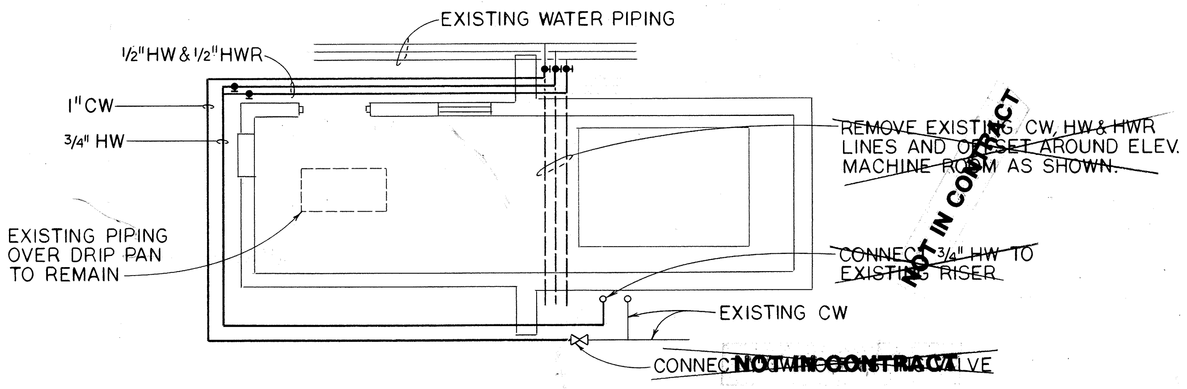

BASEMENT MECHANICAL PLAN
SCALE: 1/4" = 1'-0"

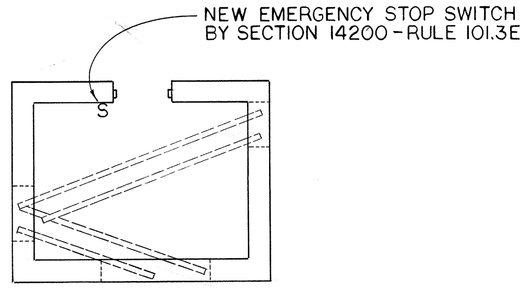

SHEAVE ROOM PLAN
SCALE: 1/4" = 1'-0"

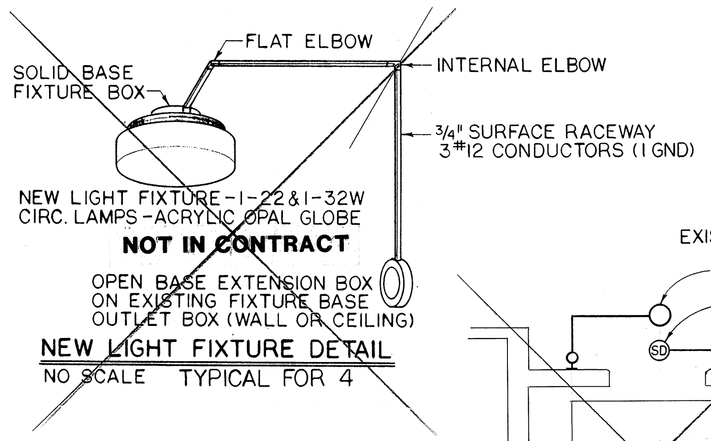

NEW LIGHT FIXTURE DETAIL
NO SCALE TYPICAL FOR 4

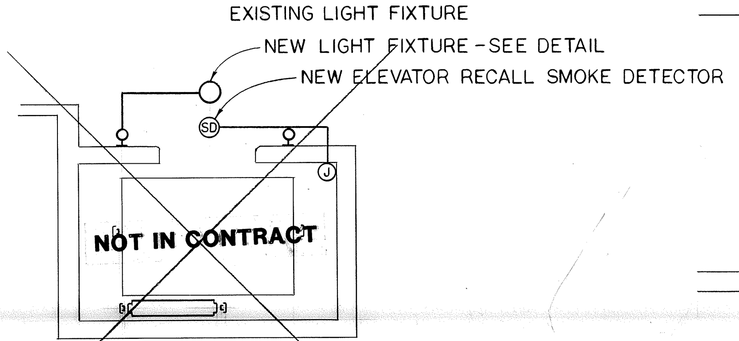

TYPICAL FLOOR PLAN
SCALE: 1/4" = 1'-0"

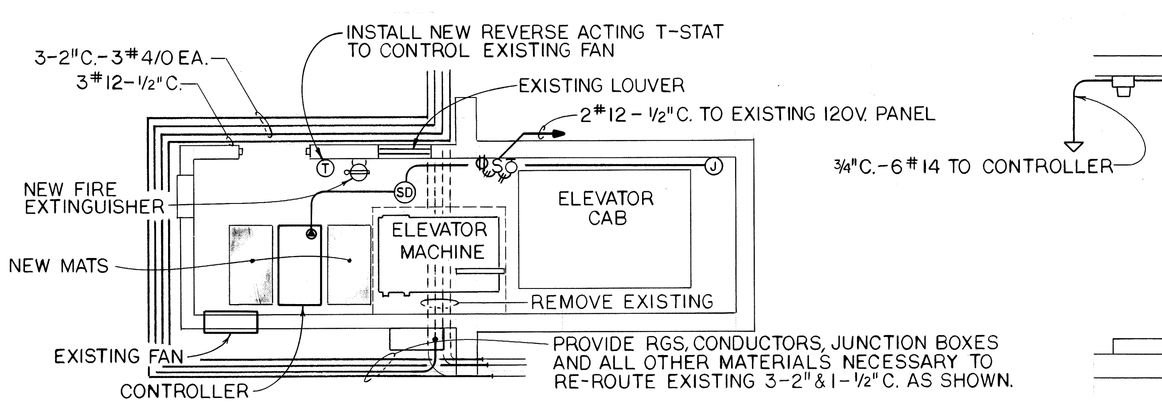

BASEMENT PLAN
SCALE: 1/4" = 1'-0"

BLDG./ELEV. NO. 172
PASSENGER TYPE - 3500LBS. - 300FPM
MFG. - PAYNE NO. 107485
4 FLOORS - 4 STOPS - FRONT
CAR PLATFORM INSIDE:
4'-8" x 7'-8 1/2" - AREA: 35.7 S.F.
CAR DOOR OPENING - 4'-6"
HORIZONTAL SLIDING DOORS
TYPE OF MACHINE - W.G.T.

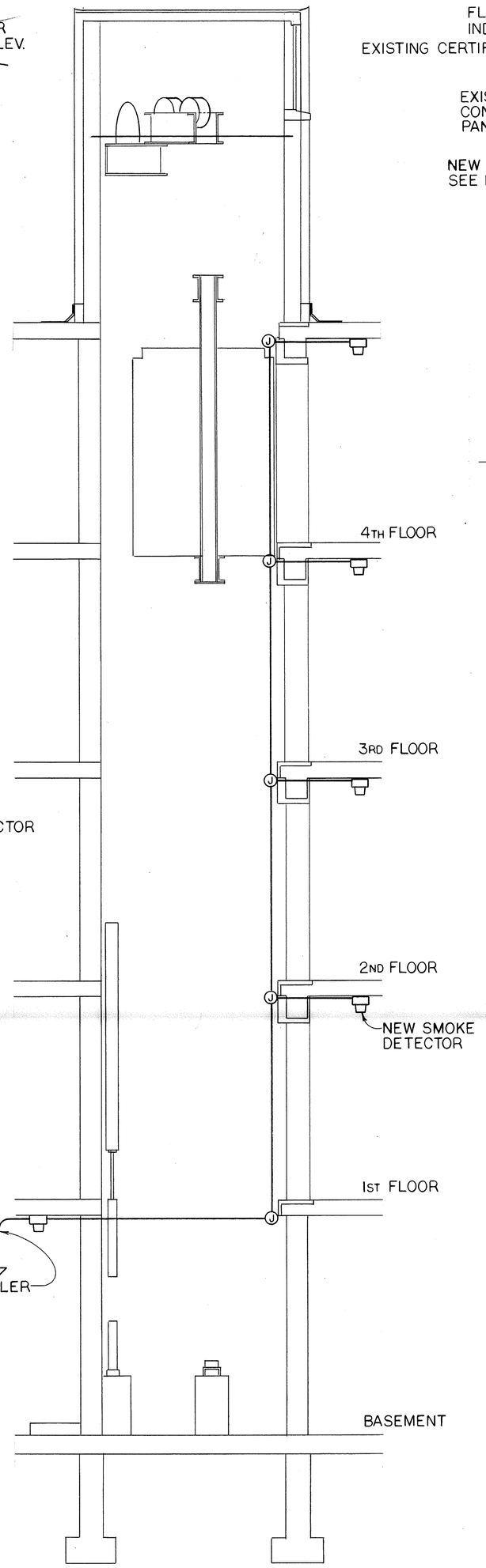

SECTION THRU SHAFT
SCALE: 1/4" = 1'-0"

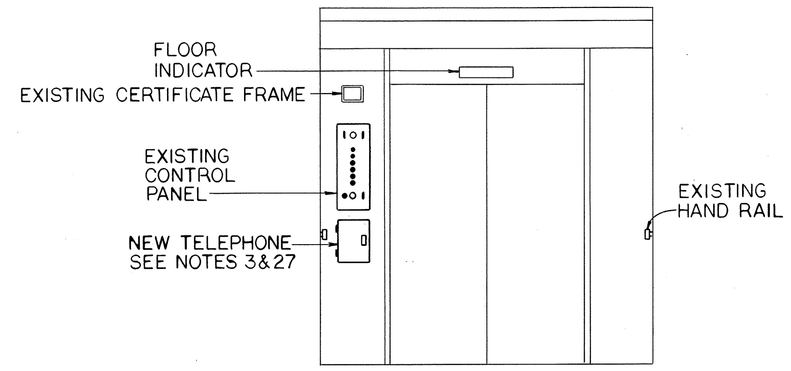

FRONT INTERIOR ELEVATION
SCALE: 1/2" = 1'-0"

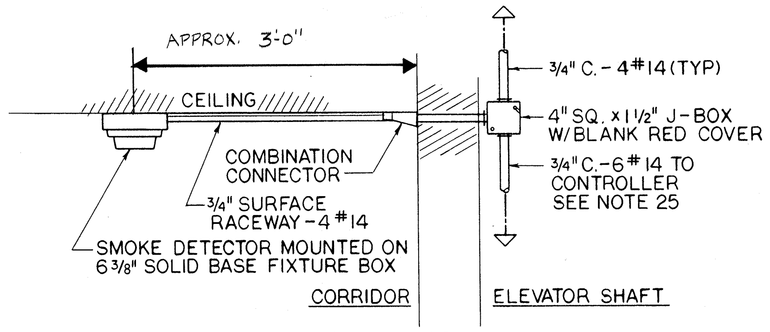

SMOKE DETECTOR DETAIL
NO SCALE TYPICAL FOR 5

SCOPE OF WORK

1. ELEVATORS 172, 442, 444 AND 678
RULE 112.5: PROVIDE A SOLID STATE LIGHT RAY DEVICE PROJECTING AT LEAST TWO RAYS AT 5-INCH AND 29-INCH HEIGHTS ACROSS THE CAR ENTRANCE IN THE SPACE BETWEEN THE CAR AND THE HORIZONTAL SLIDING HOISTWAY DOORS.

2. ~~ELEVATOR 443~~
RULE 112.5: ~~REPAIR EXISTING LIGHT RAY DEVICE.~~ NOT IN CONTRACT

3. ELEVATORS 172, 442, 443, 444 AND 678
RULE 211.1(2): PROVIDE TWO-WAY COMMUNICATION BETWEEN EACH ELEVATOR AND A POINT OUTSIDE THE HOISTWAY, CONSISTING OF A TELEPHONE HANDSET, INTEGRAL CABINET IN THE CAR OPERATING PANEL AND WIRED CONNECTION TO THE BUILDING TELEPHONE SYSTEM(S).

4. INSTALL AUTO DIALER, WIRING TO CAR, CAR HANDSET AND CONDUIT TO BLDG'S TELEPHONE CABLE ENTRANCE CABINET

5. ~~ELEVATORS 172, 442, 443, 444 AND 678~~
RULE 1206.2F: ~~PROVIDE A 2½ LB. CLASS "C" FIRE EXTINGUISHER IN EACH MACHINE ROOM, WALL MOUNTED CONVENIENT TO THE ACCESS DOOR, CONFORMING TO THE REQUIREMENTS OF NFPA 10.~~ NOT IN CONTRACT

6. ELEVATORS 172 AND 678
NFPA 72E: PROVIDE A SMOKE DETECTOR AT THE TOP OF EACH HOISTWAY CONNECTED TO THE EXISTING BUILDING FIRE ALARM SYSTEM AT THE NEAREST EXISTING MANUAL OF AUTOMATIC DETECTOR.

7. ELEVATORS 444
RULE 106.1E: PROVIDE A LIGHTING FIXTURE, SWITCH AND CONVENIENCE OUTLET IN EACH ELEVATOR PIT, LOCATE ADJACENT TO THE EXISTING PIT STOP SWITCH.

8. ~~ELEVATORS 442 AND 678~~
RELOCATE THE EXISTING ~~PIT LIGHT SWITCH TO THE PRESENT PIT STOP~~ SWITCH. NOT IN CONTRACT

9. ELEVATORS 172 AND 442
RULE 111.10: PROVIDE UNLOCKING DEVICES FOR ALL HOISTWAY DOORS.

10. ELEVATOR 172
RULE 101.3E: PROVIDE A STOP SWITCH IN THE OVERHEAD MACHINERY SPACE.

11. ELEVATORS 442, 443 AND 444
RULE 211.3, 3A, 3B, 3C: PROVIDE FIRE FIGHTERS SERVICE FOR EACH ELEVATOR.

12. ~~ELEVATORS 442, 443, 444 AND 678~~
~~RULE 101.3D (1), (B), (C) AND (D): MODIFY EACH ACCESS DOOR TO MACHINE ROOMS TO BE SELF-CLOSING AND SELF-LOCKING AND EQUIPPED WITH A SPRING-TYPE LOCK ARRANGED TO PERMIT THE DOORS TO BE OPENED FROM THE INSIDE WITHOUT A KEY.~~ NOT IN CONTRACT

SEE SHEET 2 FOR CONTINUATION

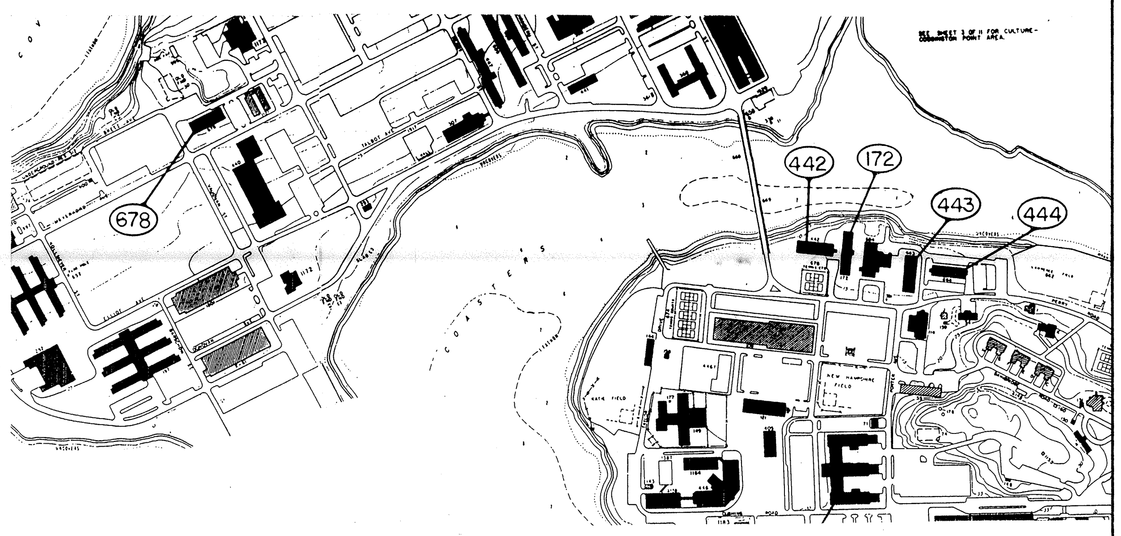

LOCATION PLAN - PROJECT M

5 4 3 2 1 0 5 10
GRAPHIC SCALE

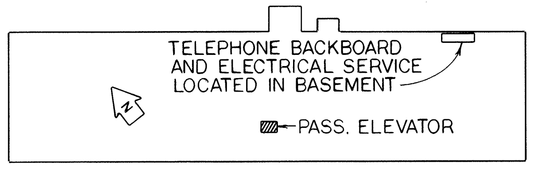

KEY PLAN

JOHN P. LEGNOS
No. 2356
REGISTERED
PROFESSIONAL ENGINEER

LEGNOS AND CRAMER, INC.
CONSULTING ENGINEERS
248 FARMINGTON AVE. - HARTFORD, CT. 06105

NETC DWG. No. 27547-271 NETC SK. No.	Department of the Navy — Naval Facilities Engineering Command NAVAL EDUCATION AND TRAINING CENTER NEWPORT, RHODE ISLAND	
DSGN: PFC DR: RJH BR:	ELEVATOR MODIFICATIONS BLDG. 172	
DR: PFC 6/1/89 APPROVED: DATE 6-14-89		
SATISFACTORY TO: 5/17/89 DATE: 5/17/89	SIZE F / CODE IDENT. No.	NAVFAC DRAWING No. 2122380
	SCALE	CONST. CONTR. No N62472-88-C-1629 SPEC: / SHEET 1 OF 4

23 MAR 89