REVISION				
SYM	ZONE	DESCRIPTION	DATE	APPROVED

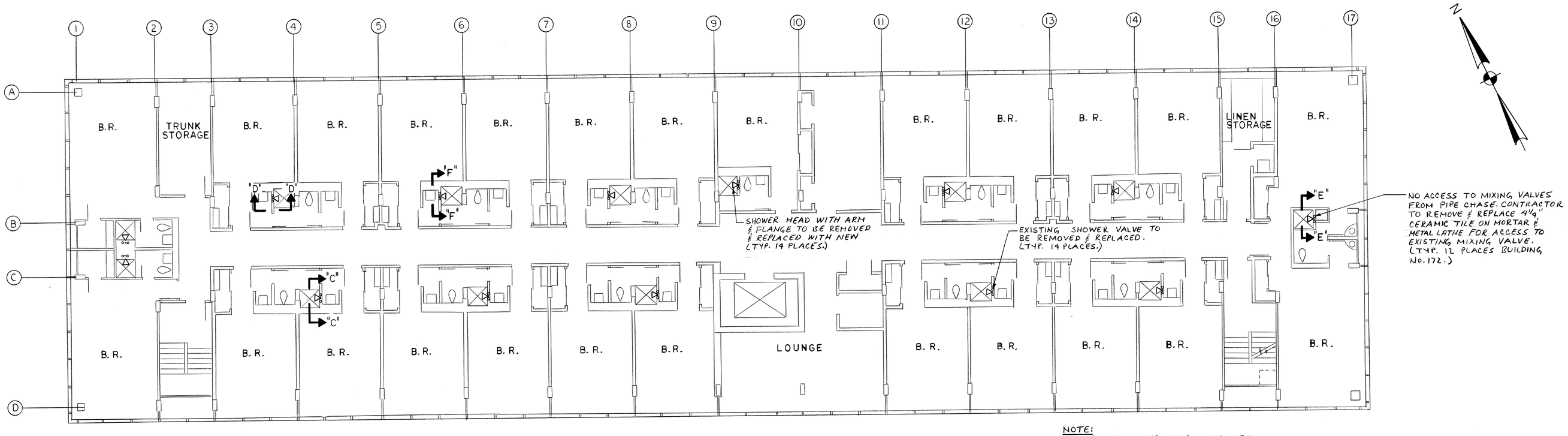

NOTE:
HOT & COLD WATER RISER SHUT-OFF VALVE IN CRAWL SPACE BELOW 1st FLOOR.

TYPICAL FIRST THRU FOURTH FLOORS
BUILDING 172
SCALE: 1/8"=1'-0"

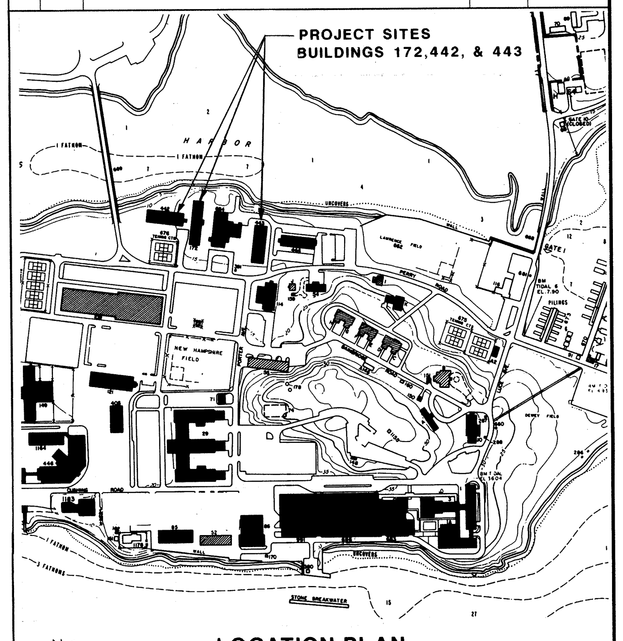

LOCATION PLAN
NO SCALE

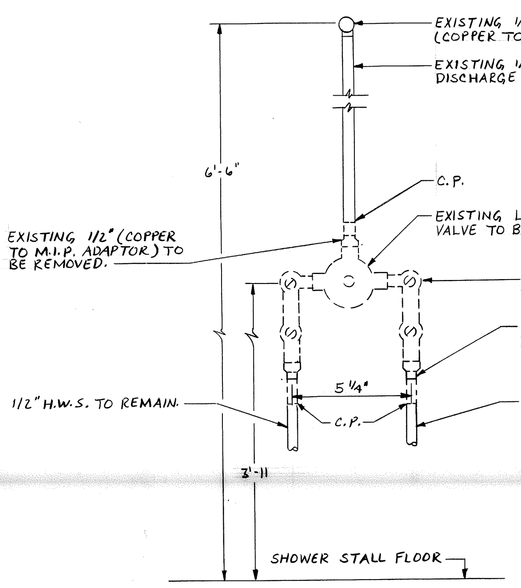

SECTION "C-C"
SCALE: 3" = 1'-0"

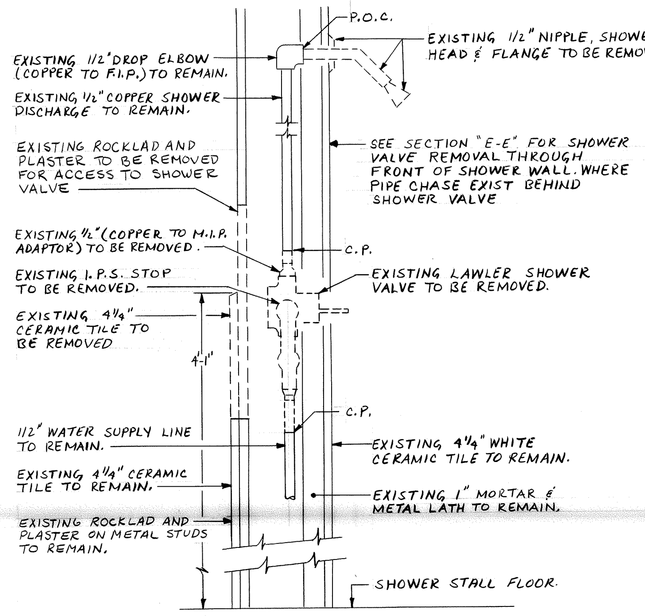

SECTION "D-D"
SCALE: 3" = 1'-0"

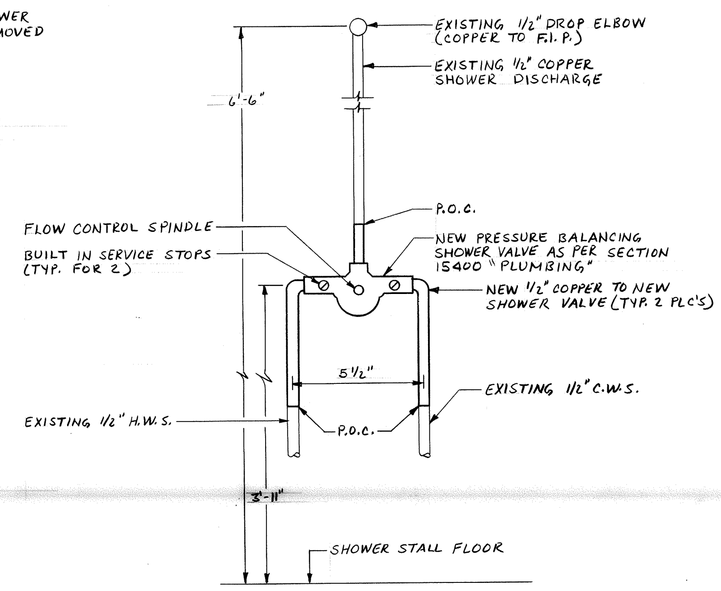

SECTION "C-C"
SCALE: 3" = 1'-0"

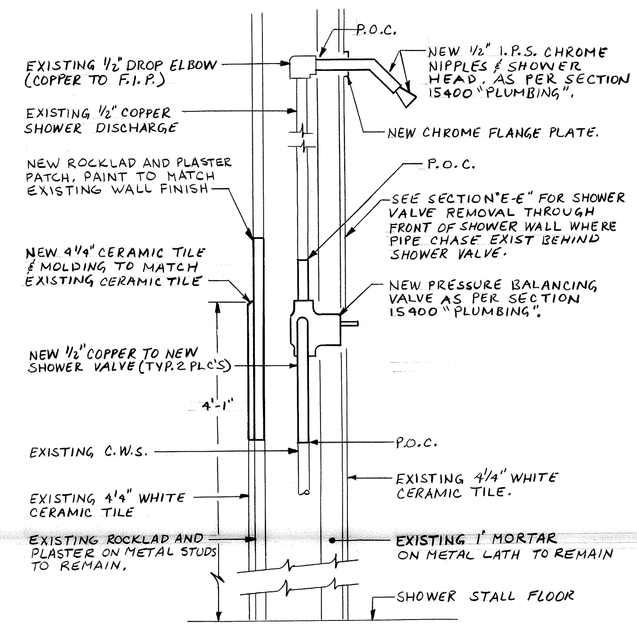

SECTION "D-D"
SCALE: 3" = 1'-0"

LEGEND

————	EXISTING WORK
————	NEW WORK
- - - - - -	WORK TO BE REMOVED
P.O.C.	POINT OF CONNECTION
C.P.	CUT POINT
C.W.S.	COLD WATER SUPPLY
H.W.S.	HOT WATER SUPPLY
BR	BEDROOM
M.I.P.	MALE IRON PIPE
F.I.P.	FEMALE IRON PIPE
I.P.S.	IRON PIPE SIZE
△	SHOWER VALVE & HEAD
O—O	SHOWER MIXING VALVE

DEMOLITION WORK - BUILDING 172

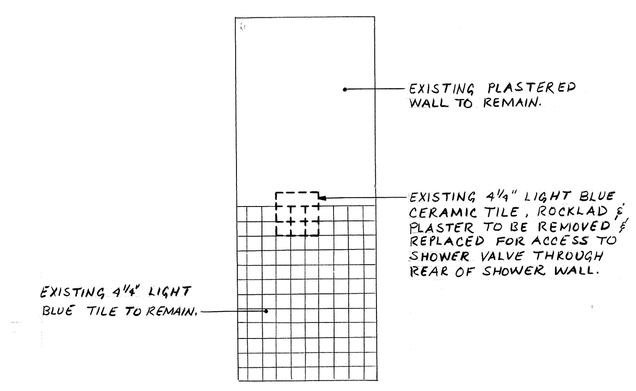

SECTION "F-F"
SCALE: 1/2" = 1'-0"

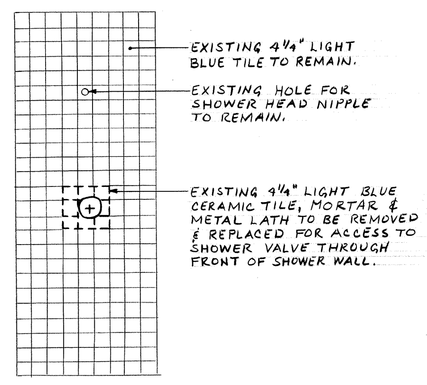

SECTION "E-E"
SCALE: 1/2" = 1'-0"

NEW WORK - BUILDING 172

GRAPHIC SCALES

1/8" = 1'-0" 0 5' 10' 15' 20' 25' 30'

1/2" = 1'-0" 0 1' 2' 3' 4' 5' 6' 7' 8'

DANIEL C. RAICHE
No. 1472
REGISTERED PROFESSIONAL ENGINEER

NETC DWG. NO. 27464-270	DEPARTMENT OF THE NAVY — NAVAL FACILITIES ENGINEERING COMMAND
NETC SK. NO.	NAVAL EDUCATION AND TRAINING CENTER NEWPORT, RHODE ISLAND
DSGN S.B.	
DR. R.A.	REPLACE SHOWERS IN BUILDING NOS. 172,442,443, & 447 BUILDING 172 FLOOR PLANS AND SECTIONS DEMOLITION AND NEW WORK PLUMBING
BR.	
DIR.	
APPROVED / DATE 6-12-89	
SATISFACTORY TO / DATE 6-1-89	SIZE F · CODE IDENT NO. 80091 · NAVFAC DRAWING NO. 2,096,172
	CONSTR. CONTR. NO. N62472-89-C-1611
	SCALE AS NOTED · SPEC. 04-89-1611 · SHEET 2 OF 3