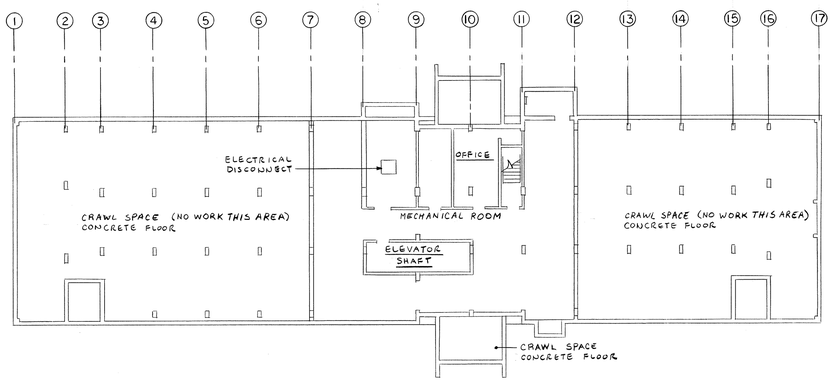

BASEMENT PLAN

SCALE: 1/16"=1'-0"

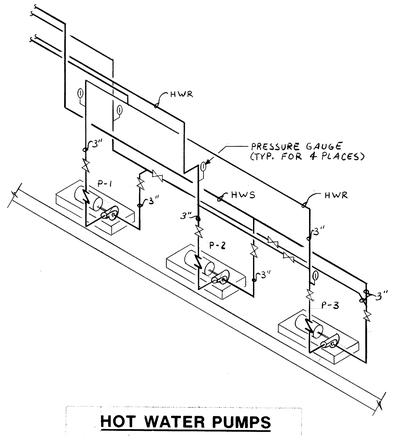

HOT WATER PUMPS

ISOMETRIC SECTION "A-A"

NO SCALE

EXISTNG PIPING INSULATION THICKNESS (INCHES) SCHEDULE BUILDING NO. 172					
	TUBE AND PIPE SIZE (INCHES)				
SERVICE	1/4 - 1 1/4	1 1/2 - 3	3 1/2 - 8	EQUIPMENT	
DOMESTIC WATER (HOT OR COLD)	1.0	1.0	-----	-----	
HEATING HOT WATER	1.0	1.0	1.5	-----	
CONDENSATE RETURN (201 F TO 250 F)	1.0	1.5	2.0	-----	
STEAM PIPING (251 F TO 351 F)	1.0	2.0	2.5	----	
ROOF DRAINS	-----	1.0	-----	-----	
HEAT EXCHANGERS	-----	-----	-----	2.0	
EXPANSION TANKS	-----	-----	-----	NONE	
AIR SEPERATOR	-----	-----	-----	2.0	

REVISION

SYM	ZONE	DESCRIPTION	DATE	APPROVED
1		ASBUILT 6-11-91	1-27-98	MD.

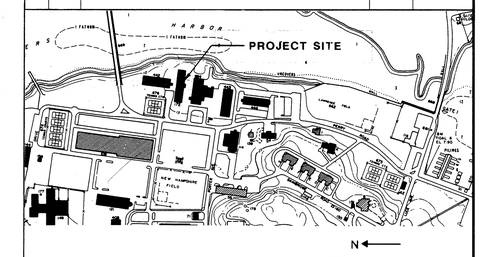

LOCATION PLAN

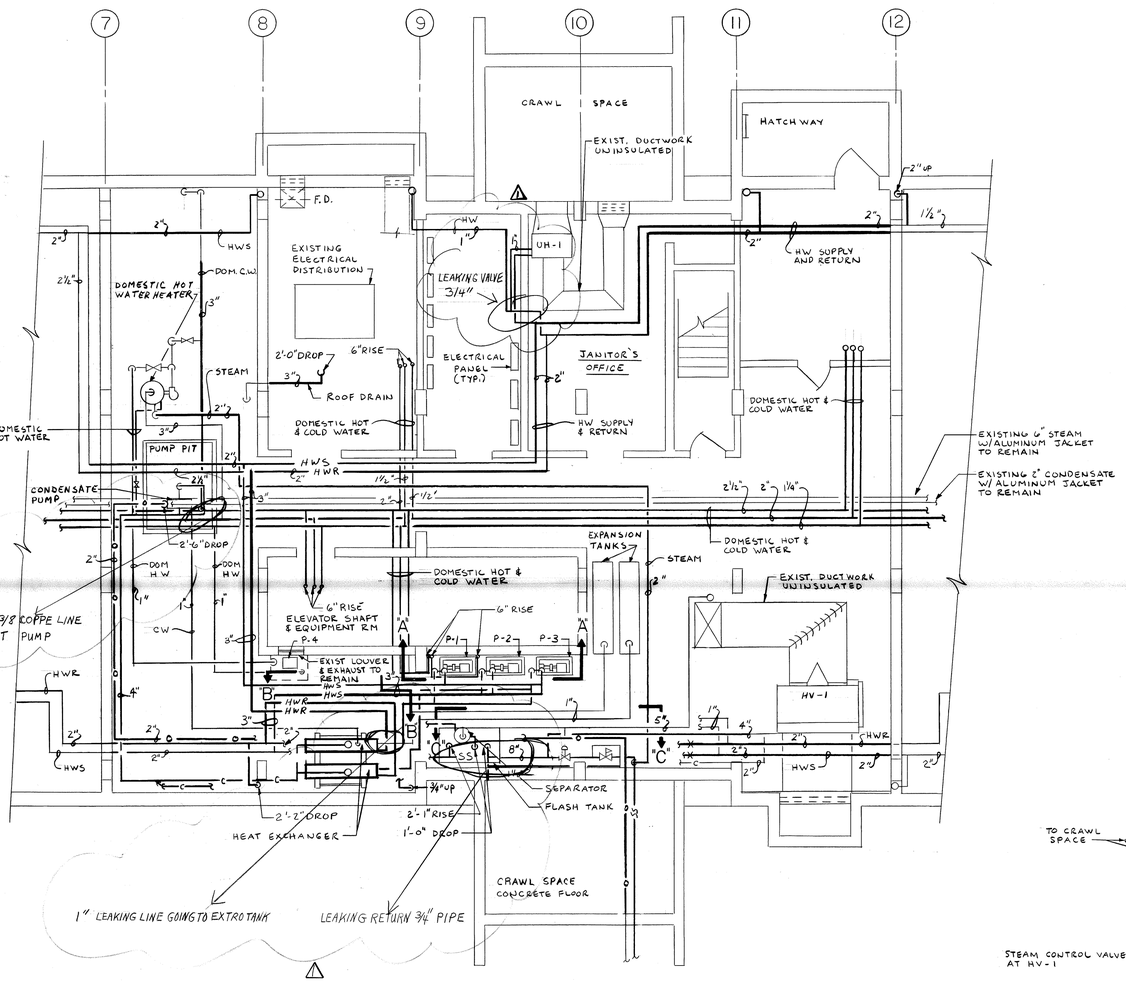

MECHANICAL ROOM

SCALE: 3/16"=1'-0"

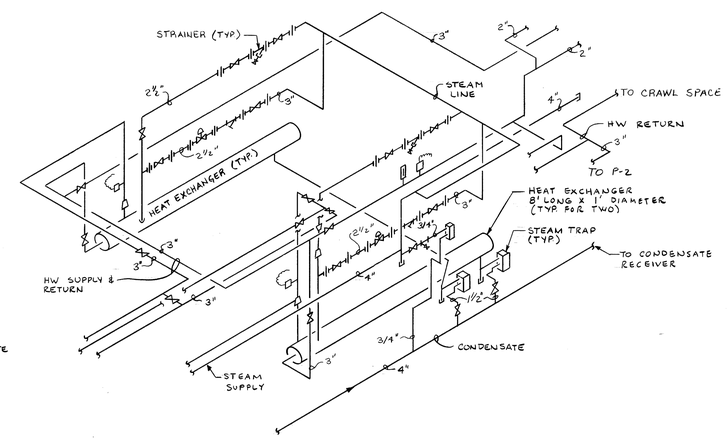

ISOMETRIC SECTION "B-B"

NO SCALE

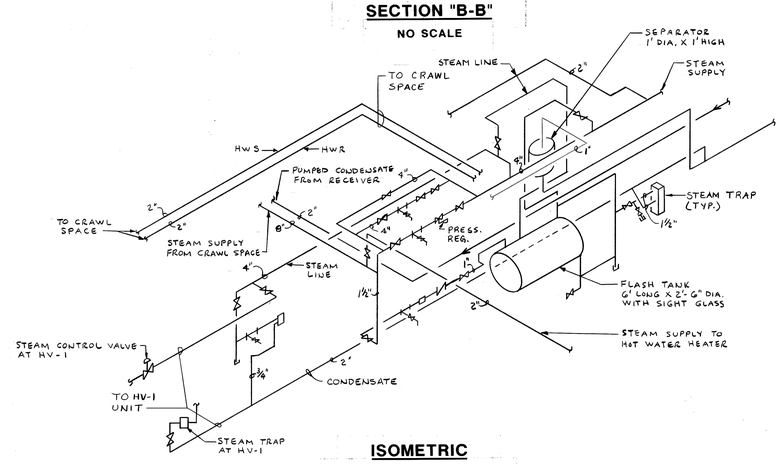

ISOMETRIC SECTION "C-C"

NO SCALE

LEGEND

———	ASBESTOS INSULATION ON EXISTING PIPING TO BE REMOVED & NEW INSULATION TO BE INSTALLED
———	EXISTING TO REMAIN
SS	STEAM SUPPLY
C	CONDENSATE
HWR	HOT WATER RETURN
HWS	HOT WATER SUPPLY
F.D.	FIRE DAMPER
O	CONDENSATE PUMP DISCHARGE
P-1	HOT WATER PUMP
HV-1	HEATING VENTILATING UNIT
	BALANCING VALVE
	CONTROL VALVE
	GATE VALVE
	UNION
	THERMOMETER
	CONTROL SENSOR

GENERAL NOTES

1. ALL ASBESTOS INSULATION REMOVED SHALL BE REPLACED WITH NEW INSULATION AS SPECIFIED.
2. CONTRACTOR TO VERIFY IN FIELD WITH CONTRACTING OFFICER THE EXACT LOCATION OF ASBESTOS INSULATION.
3. ALL EXISTING ASBESTOS PIPE INSULATION SHALL BE REMOVED AS SPECIFIED IN SECTION 02080 "REMOVAL AND DISPOSAL OF ASBESTOS MATERIALS".
4. ALL EXISTING STRAINERS AND VALVES SHALL BE INSULATED AS SPECIFIED.
5. ALL WORK SHALL BE SCHEDULED AND COORDINATED WITH THE CONTRACTING OFFICER TO AVOID INTERFERENCE WITH NORMAL WORK SCHEDULE OF OCCUPANTS.
6. MECHANICAL ROOM SHALL BE CLEANED AND VACUUMED IN ACCORDANCE WITH SECTION 02080 "REMOVAL AND DISPOSAL OF ASBESTOS MATERIAL".
7. **CONTRACTOR TO VERIFY ALL FIELD CONDITIONS, INCLUDING** LOCATION OF EXISTING PIPING AND VALVES TO BE INSULATED, BEFORE STARTING WORK.
8. INSULATION OF EXISTING DUCTWORK NOT REQUIRED UNDER THIS CONTRACT.
9. ELEVATOR MACHINE ROOM - SEAL AND SECURE EXISTING EXHAUST FAN AND LOUVER. SECURE ELEVATOR AND PROVIDE FULL CONTAINMENT TECHNIQUES FOR ELEVATOR MECHANICAL ROOM AND ELEVATOR SHAFT TO GUARANTEE THAT ASBESTOS CONTAMINATION WILL BE CONTAINED IN THE ASBESTOS CONTROL AREA AND NOT INFILTRATE OCCUPIED AREAS CONNECTED BY EXISTING ELEVATOR SHAFT.
10. EXISTING HEATING AND DOMESTIC HOT WATER SYSTEMS - ASBESTOS REMOVAL WORK WILL BE ALLOWED BETWEEN 8:00 AM AND 4:30 PM.
11. BUILDING SHALL BE OCCUPIED DURING THE CONTRACT PERIOD.

GRAPHIC SCALES

1/16" = 1'-0" 0 5' 10' 20' 30' 40' 50' 60'

1/4" = 1'-0" 0 5' 10' 15'

DANIEL C. RAICHE No. 11472 REGISTERED PROFESSIONAL ENGINEER

NETC DWG. NO. / NETC SK. NO.	27654-272
DSGN	R.P.D.
DR.	R.B.
BR.	
DIR	
APPROVED	DATE
SATISFACTORY TO	
DATE	

DEPARTMENT OF THE NAVY — NAVAL FACILITIES ENGINEERING COMMAND

NAVAL EDUCATION AND TRAINING CENTER
NEWPORT, RHODE ISLAND

ASBESTOS REMOVAL IN BUILDING NO. 172

PLANS AND DETAILS

MECHANICAL

SIZE	CODE IDENT NO.	NAVFAC DRAWING NO.
F	80091	2,133,567
SCALE: AS NOTED		CONSTR. CONTR. NO. N62472-91-C-16
		SHEET 1 OF 1

04-90-1649

04-91-1616 (eng)