REVISION				
SYM	ZONE	DESCRIPTION	DATE	APPROVED
		AS BUILT 12-29-93	4-10-98	MD

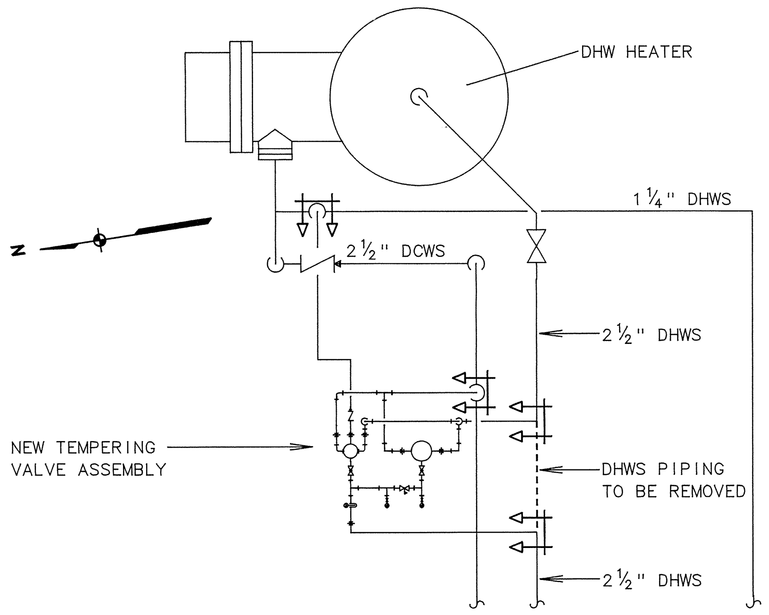

BUILDING 442 PIPING PLAN

SCALE: 3/4" = 1'-0"

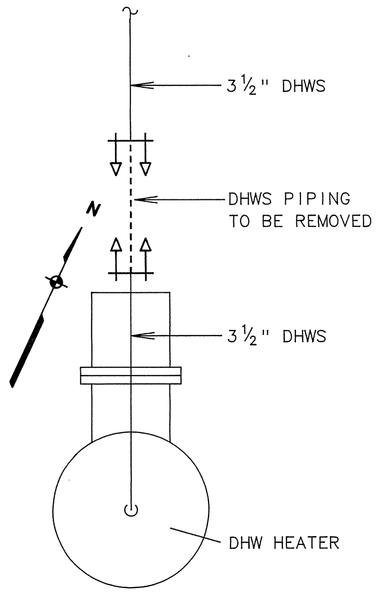

BUILDING 447 REMOVAL PLAN

SCALE: 3/4" = 1'-0"

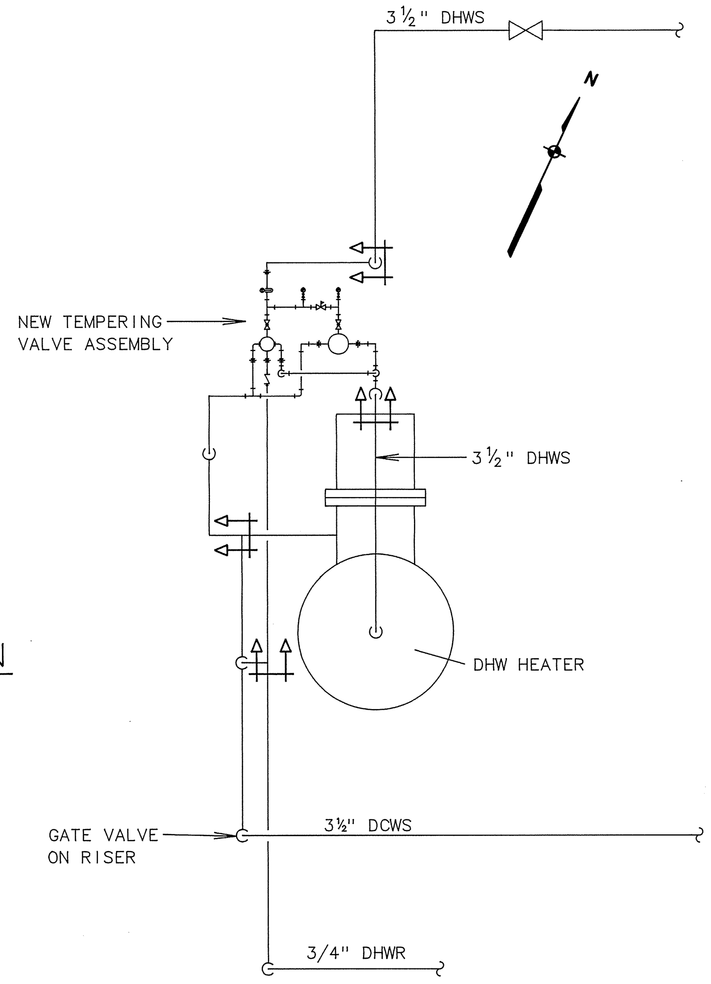

BUILDING 447 PIPING PLAN

SCALE: 3/4" = 1'-0"

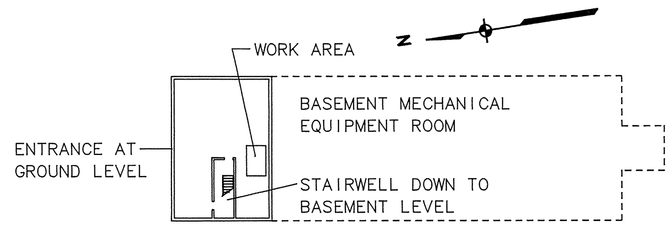

BUILDING 442 KEY PLAN

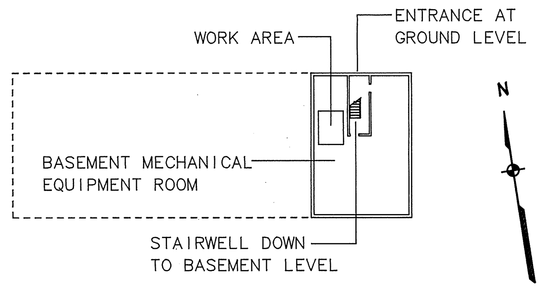

BUILDING 443 KEY PLAN

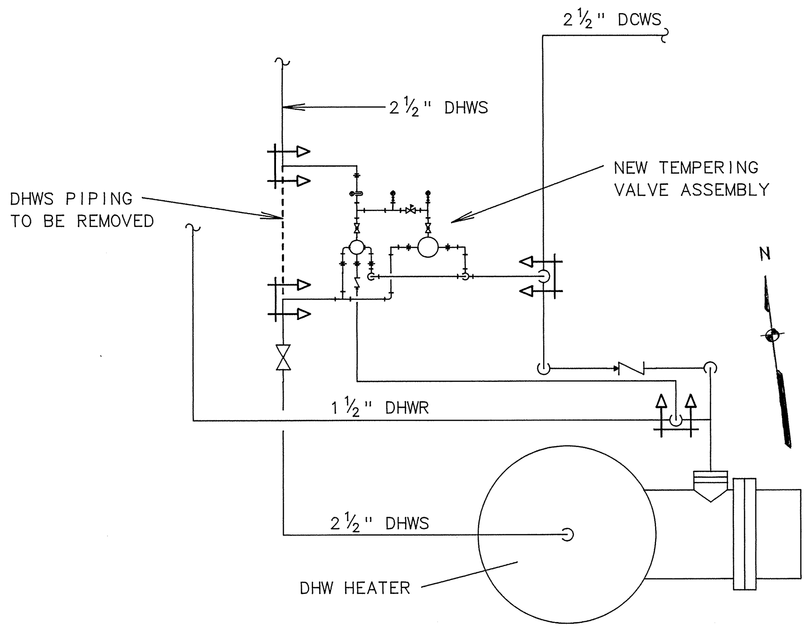

BUILDING 443 PIPING PLAN

SCALE: 3/4" = 1'-0"

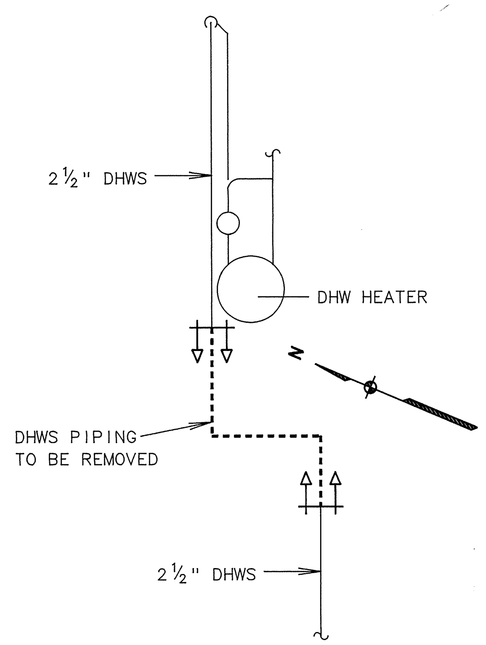

BUILDING 678 REMOVAL PLAN

SCALE: 3/4" = 1'-0"

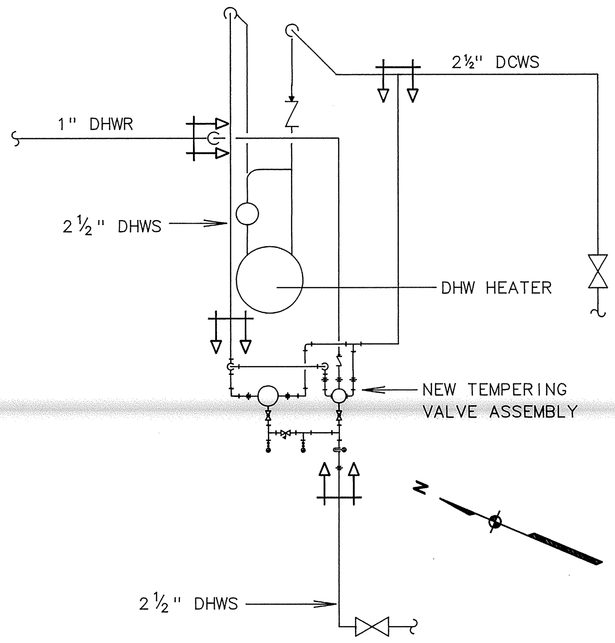

BUILDING 678 PIPING PLAN

SCALE: 3/4" = 1'-0"

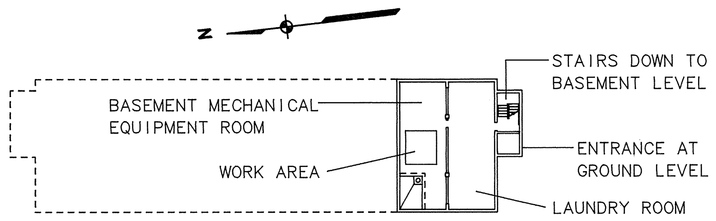

BUILDING 444 KEY PLAN

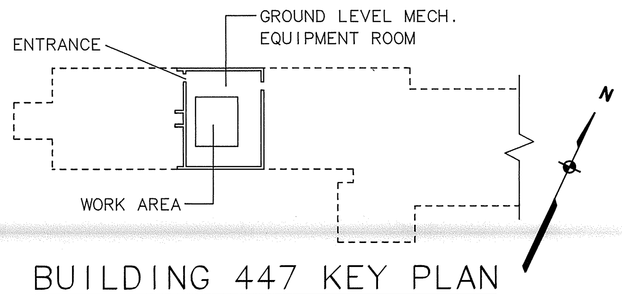

BUILDING 447 KEY PLAN

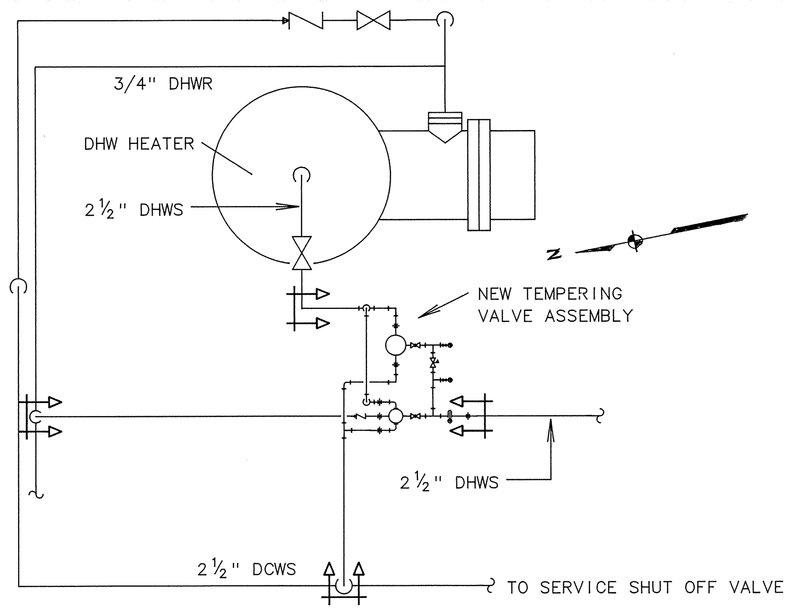

BUILDING 444 PIPING PLAN

SCALE: 3/4" = 1'-0"

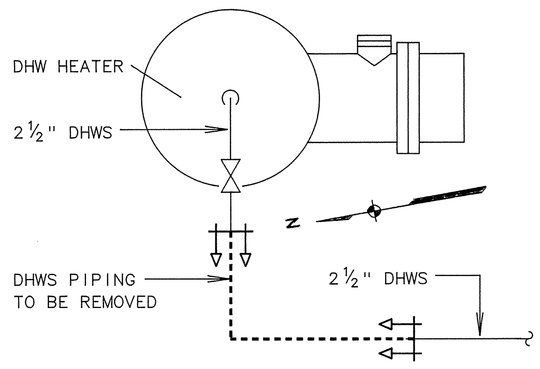

BUILDING 444 REMOVAL PLAN

SCALE: 3/4" = 1'-0"

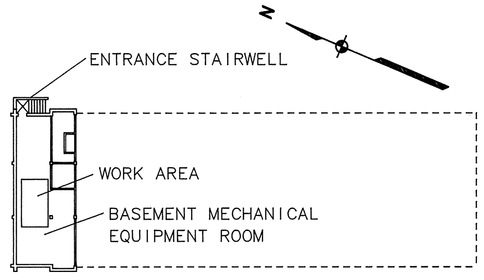

BUILDING 678 KEY PLAN

NOTES:

1. FOR SYMBOL LEGEND AND FLOW CAPACITIES SEE DRAWING P-1
2. PROVIDE NEW CHECK VALVE AND GLOBE VALVE FOR DHWR PIPING AS SHOWN IN SCHEMATIC ON DRAWING P-1.

CHECK SCALE BEFORE USING

3/4"=1'-0"

0 1' 2' 4'

PEN J. FANG
REGISTERED PROFESSIONAL ENGINEER No. 3566

ENGITEK, INC.
Consulting Engineers & Architects
1370 Plainfield Street
Cranston, Rhode Island 02919

NETC DWG. NO. 29464-291
NETC SK. NO.
DSGN. JMS
DR. JMS
BR. [illegible] PE
DIR. [illegible] PE 7/27/92
APPROVED [illegible] 10/2/92
DATE
SATISFACTORY TO [illegible] for 43
DATE 7-20-92

DEPARTMENT OF THE NAVY — NAVAL FACILITIES ENGINEERING COMMAND
NAVAL EDUCATION AND TRAINING CENTER
NEWPORT, RHODE ISLAND

PROVIDE DOMESTIC HOT WATER TEMPERING DEVICES FOR BUILDINGS 172, 441, 442, 443, 444, 447, AND 678

ADDITIONAL PLAN VIEWS

SIZE	CODE IDENT. NO.	NAVFAC DRAWING NO.	DIS. SH. NO.
F	80091	2149507	P-2
SCALE: AS NOTED		CONSTR. CONTR. NO. N62472-92-C-1672	
		SPEC. 04-92-1672	SHEET 2 OF 2