| REVISION | | | | |
|---|---|---|---|---|
| SYM | ZONE | DESCRIPTION | DATE | APPROVED |
| 1 | | AS BUILT 12-29-93 | 4-10-98 | MD |

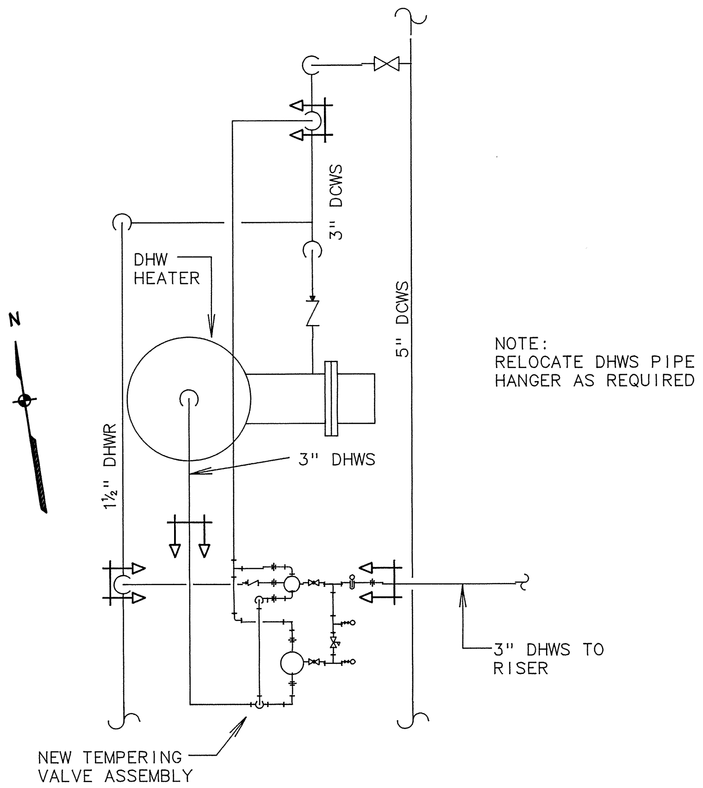


## BUILDING 172 PIPING PLAN

SCALE: 3/4" = 1'-0"

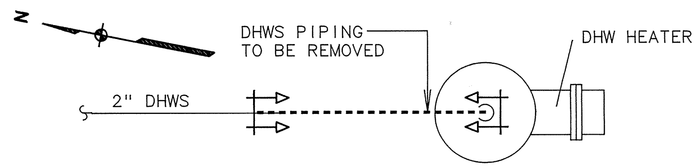


## BUILDING 441 REMOVAL PLAN

SCALE: 3/4" = 1'-0"

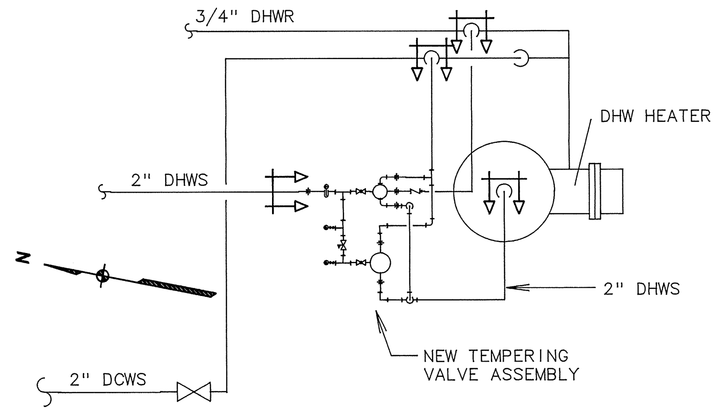


## BUILDING 441 PIPING PLAN

SCALE: 3/4" = 1'-0"

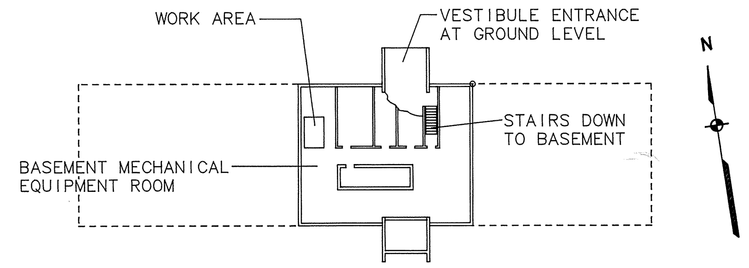


## BUILDING 172 KEY PLAN

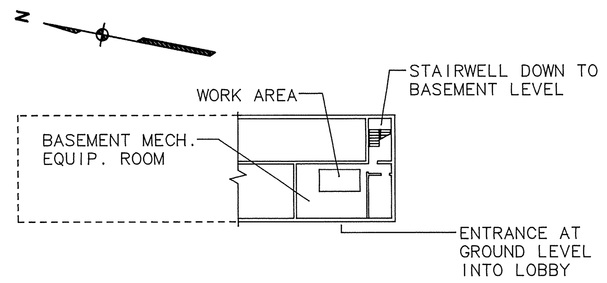


## BUILDING 441 KEY PLAN

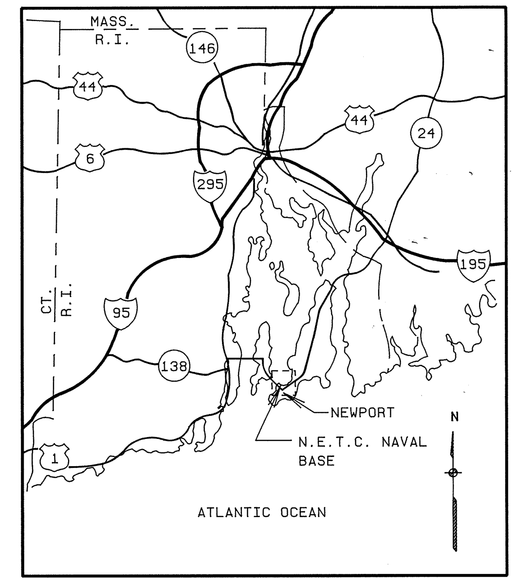


## VICINITY MAP

NO SCALE

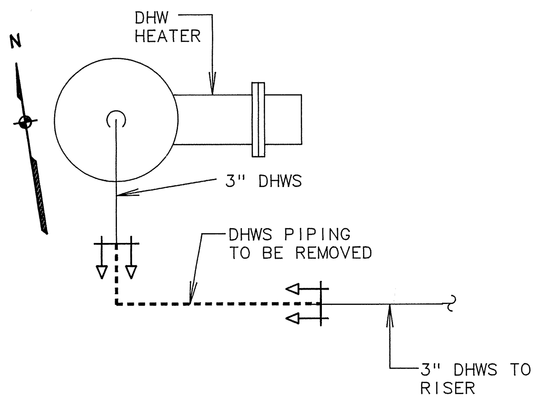


## BUILDING 172 REMOVAL PLAN

SCALE: 3/4" = 1'-0"

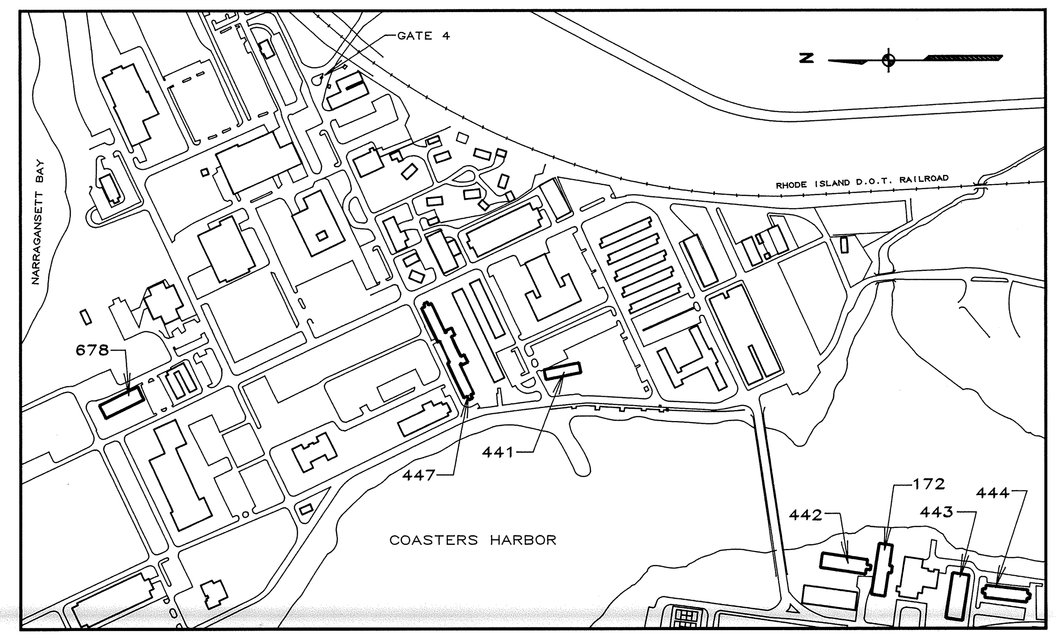


## LOCATION MAP

NO SCALE

| FLOW CAPACITIES | | |
|---|---|---|
| GPM MIN FLOW | GPM MAX FLOW | BUILDING NUMBERS |
| 2 | 22 | 441 |
| 2 | 41 | 172 |
| 3 | 48 | 442, 443, 444, 678 |
| 3 | 38 | 447 |

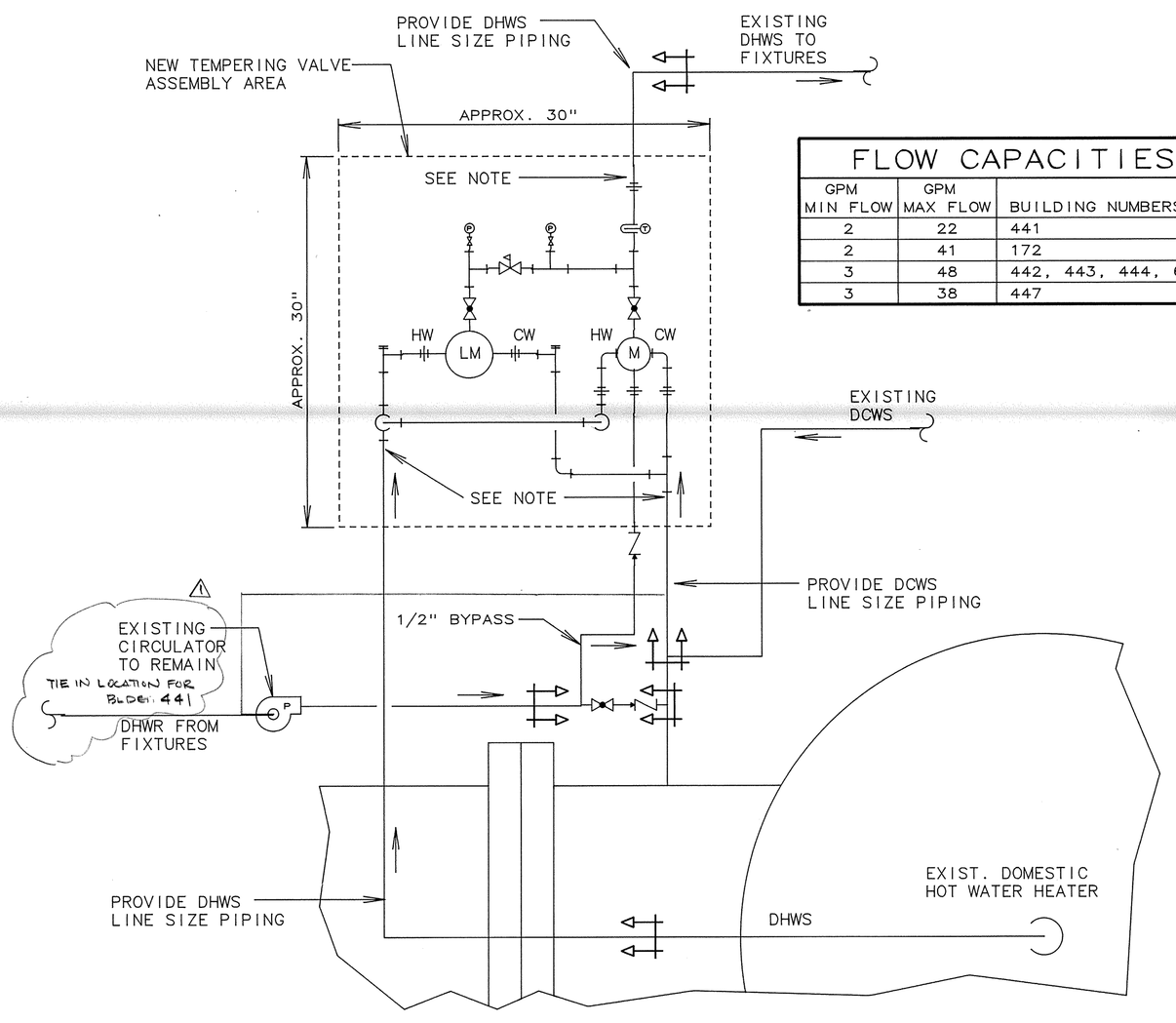


NOTE:

INSTALL PIPING AT FULL DCWS AND DHWS LINE SIZE ALL THE WAY TO THE INLET OF THE NEW TEMPERING VALVE ASSEMBLY.

## TYPICAL PIPING SCHEMATIC

NO SCALE

### SYMBOL LEGEND

- PIPING TO BE REMOVED
- GLOBE VALVE
- GATE VALVE
- CHECK VALVE
- PRESSURE REDUCING VALVE
- NEW WORK CONNECTION POINT (ARROW POINTS TOWARD NEW WORK)
- PIPING UNION
- PRESSURE GAUGE
- ANGLE STAINER CHECK VALVE
- (LM) LARGE THERMOSTATIC MIXING VALVE
- (M) SMALL THERMOSTATIC MIXING VALVE
- DCWS DOMESTIC COLD WATER SUPPLY
- DHWS DOMESTIC HOT WATER SUPPLY
- DHWR DOMESTIC HOT WATER RETURN
- THERMOMETER

CHECK SCALE BEFORE USING

3/4"=1'-0"

0 1' 2' 4'

PEN J. FANG
No. 3566
REGISTERED PROFESSIONAL ENGINEER

ENGITEK, INC.
Consulting Engineers & Architects
1370 Plainfield Street
Cranston, Rhode Island 02919

NETC DWG. NO. 29463-291
NETC SK. NO.
DSGN. JMS
DR. JMS
BR. [illegible]
DIR. [illegible] PE 7/27/92
APPROVED [illegible] DATE 10/2/92
SATISFACTORY TO [illegible] for 43
DATE 7-20-92

DEPARTMENT OF THE NAVY — NAVAL FACILITIES ENGINEERING COMMAND
NAVAL EDUCATION AND TRAINING CENTER
NEWPORT, RHODE ISLAND

PROVIDE DOMESTIC HOT WATER TEMPERING DEVICES FOR BUILDINGS 172, 441, 442, 443, 444, 447, AND 678

PIPING SCHEMATIC AND PLAN VIEWS

| SIZE | CODE IDENT. NO. | NAVFAC DRAWING NO. | DIS. SH. NO. |
|---|---|---|---|
| F | 80091 | 2149506 | P-1 |

CONSTR. CONTR. NO. N62472-92-C-1672

SCALE: AS NOTED — SPEC. 04-92-1672 — SHEET 1 OF 2

| REVISION | | | | |
|---|---|---|---|---|
| SYM | ZONE | DESCRIPTION | DATE | APPROVED |
| | | AS BUILT 12-29-93 | 4-10-98 | MD |

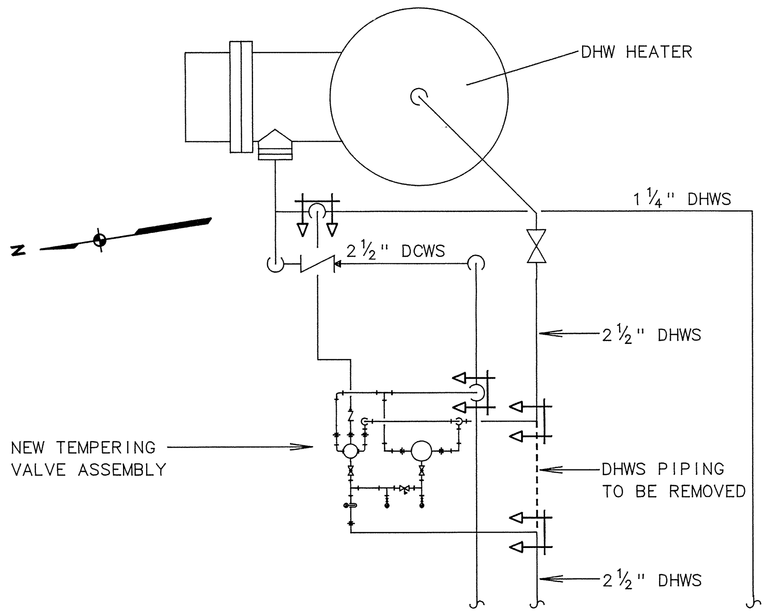


## BUILDING 442 PIPING PLAN

SCALE: 3/4" = 1'-0"

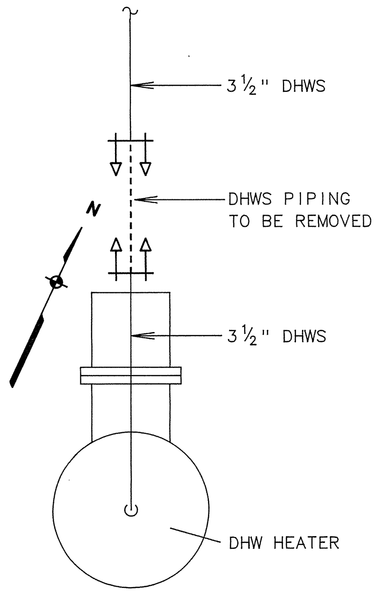


## BUILDING 447 REMOVAL PLAN

SCALE: 3/4" = 1'-0"

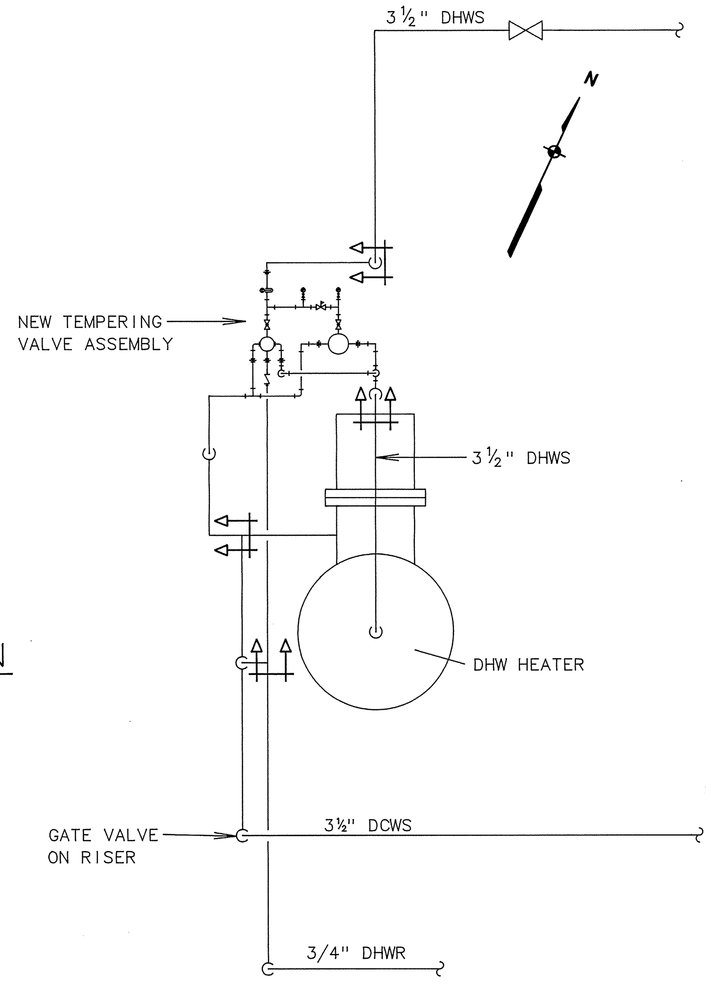


## BUILDING 447 PIPING PLAN

SCALE: 3/4" = 1'-0"

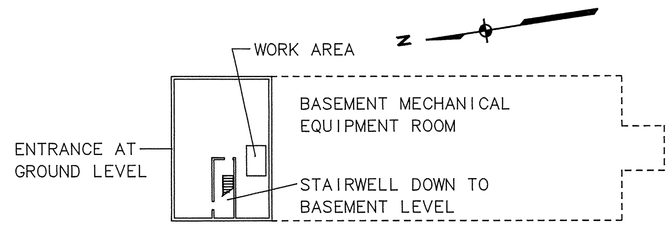


## BUILDING 442 KEY PLAN

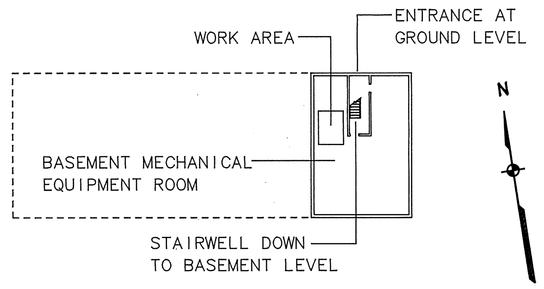


## BUILDING 443 KEY PLAN

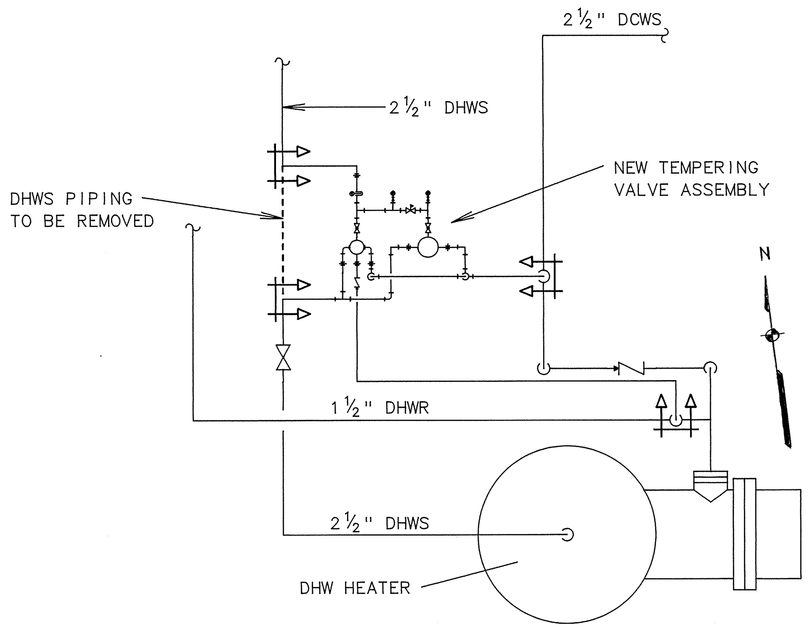


## BUILDING 443 PIPING PLAN

SCALE: 3/4" = 1'-0"

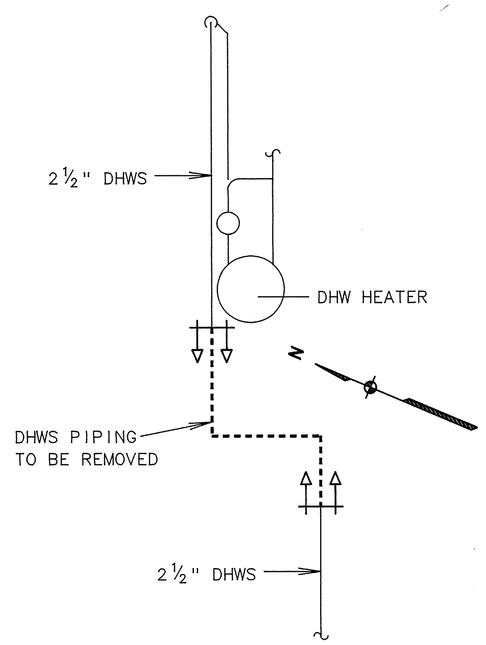


## BUILDING 678 REMOVAL PLAN

SCALE: 3/4" = 1'-0"

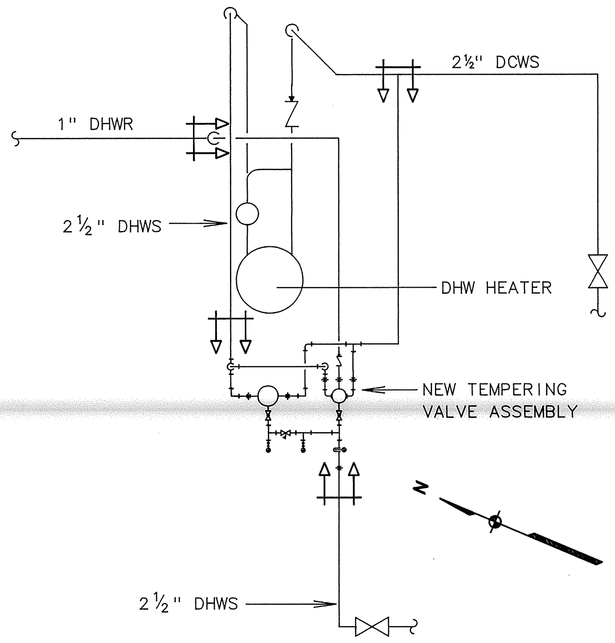


## BUILDING 678 PIPING PLAN

SCALE: 3/4" = 1'-0"

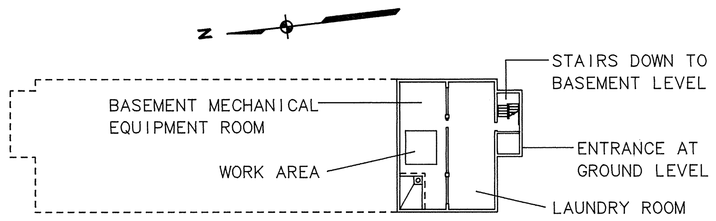


## BUILDING 444 KEY PLAN

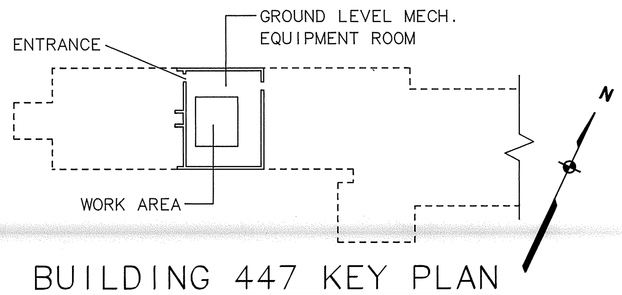


## BUILDING 447 KEY PLAN

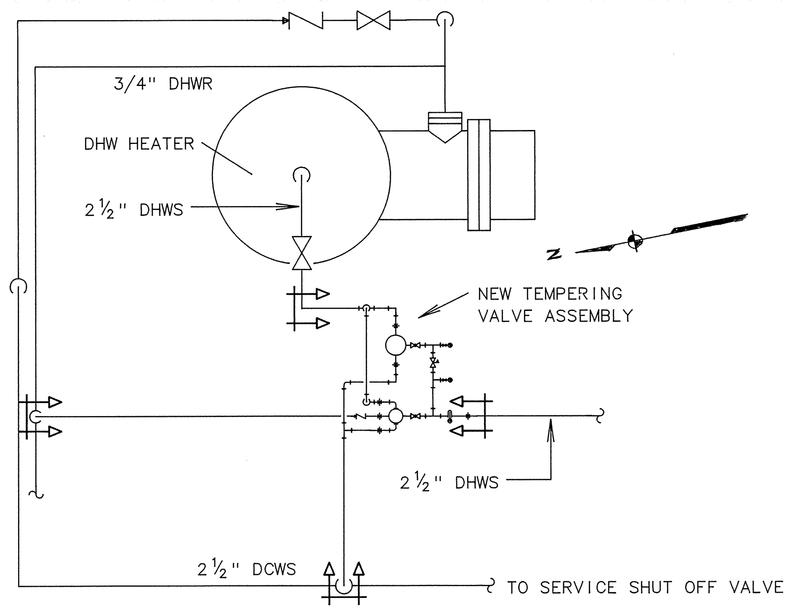


## BUILDING 444 PIPING PLAN

SCALE: 3/4" = 1'-0"

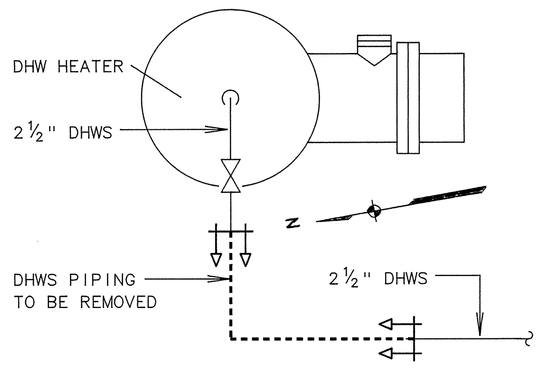


## BUILDING 444 REMOVAL PLAN

SCALE: 3/4" = 1'-0"

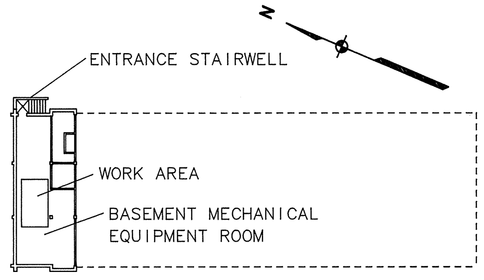


## BUILDING 678 KEY PLAN

NOTES:

1. FOR SYMBOL LEGEND AND FLOW CAPACITIES SEE DRAWING P-1
2. PROVIDE NEW CHECK VALVE AND GLOBE VALVE FOR DHWR PIPING AS SHOWN IN SCHEMATIC ON DRAWING P-1.

CHECK SCALE BEFORE USING

3/4"=1'-0"

0 1' 2' 4'

PEN J. FANG
REGISTERED PROFESSIONAL ENGINEER No. 3566

ENGITEK, INC.
Consulting Engineers & Architects
1370 Plainfield Street
Cranston, Rhode Island 02919

NETC DWG. NO. 29464-291
NETC SK. NO.
DSGN. JMS
DR. JMS
BR. [illegible] PE
DIR. [illegible] PE 7/27/92
APPROVED [illegible] 10/2/92
DATE
SATISFACTORY TO [illegible] for 43
DATE 7-20-92

DEPARTMENT OF THE NAVY — NAVAL FACILITIES ENGINEERING COMMAND
NAVAL EDUCATION AND TRAINING CENTER
NEWPORT, RHODE ISLAND

PROVIDE DOMESTIC HOT WATER TEMPERING DEVICES FOR BUILDINGS 172, 441, 442, 443, 444, 447, AND 678

ADDITIONAL PLAN VIEWS

| SIZE | CODE IDENT. NO. | NAVFAC DRAWING NO. | DIS. SH. NO. |
|---|---|---|---|
| F | 80091 | 2149507 | P-2 |
| SCALE: AS NOTED | | CONSTR. CONTR. NO. N62472-92-C-1672 | |
| | | SPEC. 04-92-1672 | SHEET 2 OF 2 |