INDIVIDUAL HEATING CONTROLS
BUILDING NO.'S 172, 444, AND 678

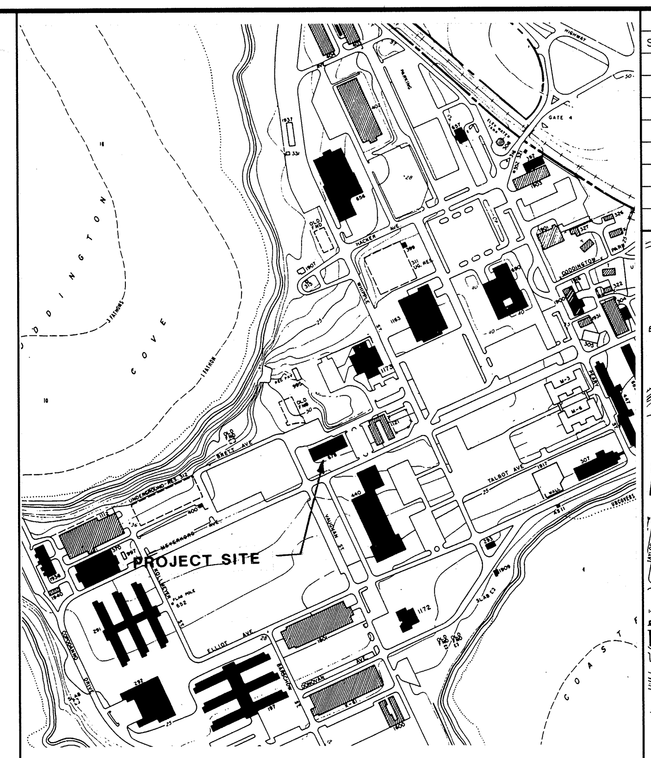

SITE PLAN
BUILDING NO. 678

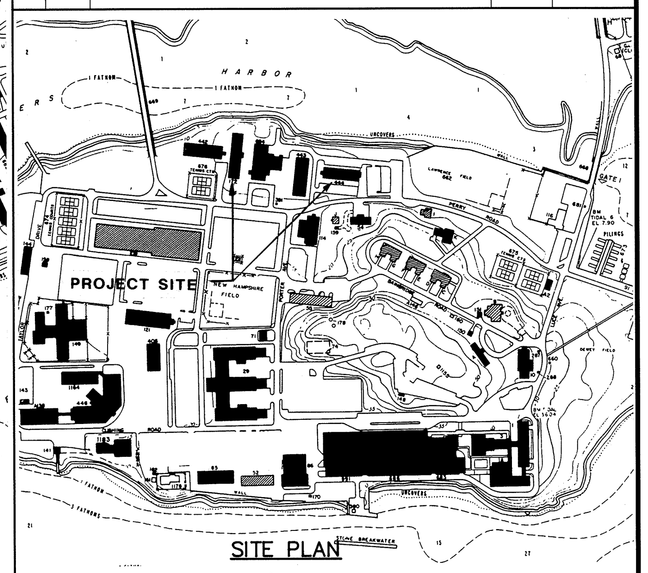

SITE PLAN
BUILDING NO.'S 172 AND 444

REVISIONS

SYM	ZONE	DESCRIPTION	DATE	APPROVED

DRAWING LIST

TITLE:	NETC DWG. NO.	NAVFAC DWG. NO.
1. TITLE SHEET	29,302-290	2,149,645
2. DEMOLITION AND REMOVAL AND NEW WORK DETAILS BUILDING NO. 172	29,303-290	2,149,646
3. DEMOLITION AND REMOVAL, NEW WORK, BUILDING NO. 172, MECHANICAL	29,304-290	2,149,647
4. RISER DIAGRAM AND DETAILS BUILDING NO. 172	29,305-290	2,149,648
5. SECTIONS AND DETAILS, BUILDING NO. 172	29,306-290	2,149,649
6. BUILDING NO. 444 FLOOR PLANS MECHANICAL/ELECTRICAL	29,307-290	2,149,650
7. RADIATION RISER DIAGRAM EAST ELEVATION AND DETAILS BUILDING NO. 444	29,308-290	2,149,651
8. RADIATION RISER DIAGRAM WEST ELEVATION AND DETAILS BUILDING NO. 444	29,309-290	2,149,652
9. FIN RADIATION DETAILS AND MECHANICAL ROOM PLAN BUILDING NO. 444	29,310-290	2,149,653
10. BUILDING NO. 678 DEMOLITION AND REMOVAL MECHANICAL	29,311-290	2,149,654
11. HEATING RISER DIAGRAMS EAST AND WEST ELEVATIONS BUILDING NO. 678	29,312-290	2,149,655
12. BUILDING NO. 678 1ST, 2ND, 3RD, 4TH, AND 5TH NEW WORK	29,313-290	2,149,656
13. MECHANICAL ROOM, ELEVATIONS, AND DETAILS MECHANICAL/ELECTRICAL	29,314-290	2,149,657

LEGEND

	NEW WORK
	EXISTING TO REMAIN
	EXISTING TO BE REMOVED
T	THERMOSTAT
	MOTORIZED CONTROL VALVE
	DIRECTION OF FLOW
	SHUT-OFF VALVE
	BALANCING COCK
	90° ELBOW
	TEE
S-1	SUPPLY RISER
R-1	RETURN RISER
A	AUTOMATIC AIR VENT
	RADIATION
V	CONTROL VALVE
J	JUNCTION BOX
P.O.C.	POINT OF CONNECTION
C.P.	CUT POINT
	FLOW INDICATOR AND BALANCING VALVE
1A	OPPOSITE HAND DETAIL
1	SEE DETAIL FOR FIN RADIATION
	UNION
A	SEE EXISTING FIN RADIATION SCHEDULE
S	SUPPLY
R	RETURN
R-1	RISER #
	CONTROL VALVE
	CONDUIT AND WIRE RUN

GENERAL NOTES

1. RELATIVE LOCATIONS AND ELEVATIONS OF EXISTING MECHANICAL AND ELECTRICAL FEATURES OF THE BUILDINGS ARE SHOWN IN ACCORDANCE WITH LATEST PLANS AND AVAILABLE ENGINEERING INFORMATION. THE CONTRACTOR SHALL VERIFY EFFECTED BUILDING FEATURES BEFORE COMMENCING WORK.
2. THE CONTRACTOR SHALL BE RESPONSIBLE FOR ALL CUTTING, PATCHING, AND PAINTING THE CONTRACTOR SHALL REPAIR DAMAGED SURFACES INCLUDING PAINTING OF DAMAGED COVERS, AS A RESULT OF CONTRACTOR WORK TO MATCH EXISTING.
3. CONTRACTOR TO DRAIN, VENT, AND REFILL HOT WATER SYSTEMS OF BUILDING NO'S. 172, 444, AND 678 AFTER COMPLETION OF ALL MECHANICAL WORK AND PIPING CONNECTIONS.
4. CONTRACTOR SHALL LEAK TEST ENTIRE SYSTEM AFTER PIPING AND MECHANICAL INSTALLATION IN ALL BUILDINGS AND BEFORE INSTALLATION OF PIPE INSULATION WHERE REQUIRED OR INDICATED.
5. ALL WORK SCHEDULES SHALL BE APPROVED BY THE CONTRACTING OFFICER BEFORE COMMENCING WORK TO AVOID INTERFERENCE WITH NORMAL WORK SCHEDULE OR OCCUPANTS AND PROVISIONS FOR NORMAL HEATING, ELECTRICAL, AND MISSCELLANEOUS UTILITY SERVICES.
6. ANY COVERS, PIPING, VALVING, FIN RADIATION OR HARDWARE DAMAGED DURING THE PERFORMANCE OF CONTRACT WORK SHALL BE REPLACEED WITH NEW ITEMS AT NO ADDITIONAL COST TO THE GOVERNMENT.
7. PIPING AS SHOWN IS DIAGRAMMATIC ONLY. CONTRACTOR SHALL DETERMINE EXACT LOCATION OF RUNS, VALVE LOCATIONS AND CONNECTIONS TO SUIT FIELD CONDITIONS.
8. ALL MATERIALS PROVIDED BY THE CONTRACTOR SHALL BE NEW.
9. CONTRACTOR TO COORDINATE INSTALLATION OF EQUIPMENT TO AVOID INTERFERENCE WITH EXISTING PIPING, ELECTRICAL CONDUITS, STRUCTURAL AND ARCHITECTURAL FEATURES OF THE BUILDING.
10. CONTRACT TO COORDINATE FINAL LOCATION OF ALL THERMOSTATS, CONTROL VALVES, FAN COIL UNITS, COVERS, FIN RADIATION, ETC. WITH CONTRACTING OFFICER FOR FINAL APPROVAL.
11. INSUALTE PIPING UNDE COVER AS SPECIFIED IN SECTION 15250 "INSULATION OF MECHANICAL SYSTEMS" UP TO THE SUPPLY AND RETURN SHUT-OFF VALVES, UNDER COVER, AND AS INDICATED.
12. BEFORE COMMENCING WORK, THE CONTRACTOR SHALL INSPECT ALL EXISTING HOT WATER SYSTEMS FOR LEAKS. CONTRACTOR SHALL NOTIFY CONTRACTING OFFICER OF ANY SYSTEM LEAKS PRIOR TO START OF WORK.
13. CONTRACTOR SHALL BE RESPONSIBLE FOR REPAIRS TO EXISTING SYSTEMS IF LEAKS OCCUR AFTER OR DURING SYSTEM TEST.
14. CONTRACTOR TO UTILIZE SURFACE METAL RACEWAY FOR ALL ELECTRICAL RUNS EXPOSED IN ROOMS. RACEWAY SHALL BEAR THE LABEL OF THE UNDERWRITER'S LABORATORIES INCORPORATED AND SHALL BE SECURELY SUPPORTED BY MANUFACTURER APPROVED METHODS.
15. CONTRACTOR SHALL PROTECT ALL FURNITURE, WALL FINISHES, CARPETING, TELEVISIONS, OR ELECTRONIC EQUIPMENT, ETC. FROM DAMAGE. ALL ROOM FURNISHINGS MUST REMAIN IN ROOM DURING CONTRACT. ALL FURNISHINGS SHALL BE COVERED WITH 1 LAYER 6 MIL PLASTIC SHEET, FURNISHED BY CONTRACTOR. CONTRACTOR IS RESPONSIBLE FOR ALL DAMAGE TO FURNISHINGS INCLUDING DAMAGE TO FLOORS OR WALLS THAT MIGHT BE CAUSED BY CONSTRUCTION.
16. CONTRACTOR SHALL COVER ALL EXISTING CARPETING WITH 1 LAYER 6 MIL PLASTIC SHEET FURNISHED BY THE CONTRACTOR. IN ADDITION, SUPPLY ONE SHEET OF 3/4" PLYWOOD OVER PLASTIC SHEET WHERE CUTTING AND THREADING, BRAZING, ETC. WILL OCCUR.

E. MICHAEL SWEENEY
No. 4290
REGISTERED PROFESSIONAL ENGINEER

NETC DWG. NO. / NETC SK. NO. 29,302-290
DSGN: R.P.D
DR. R.P.D.
BR. J. Beukema P.E.
DIR.
APPROVED DATE 4/20/92
SATISFACTORY TO Wm J Lebeau
DATE 3-31-92

DEPARTMENT OF THE NAVY — NAVAL FACILITIES ENGINEERING COMMAND
NAVAL EDUCATION AND TRAINING CENTER
NEWPORT, RHODE ISLAND

INDIVIDUAL HEATING CONTROLS BLDG. NOS. 172, 444, AND 678

TITLE SHEET

SIZE	CODE IDENT NO.	NAVFAC DRAWING NO.
F	80091	2,149,645

CONSTR. CONTR. NO. N62472-91-C-1700
SCALE: AS NOTED — SPEC. 04-91-1700 — SHEET 1 OF 13

REVISIONS				
SYM	ZONE	DESCRIPTION	DATE	APPROVED

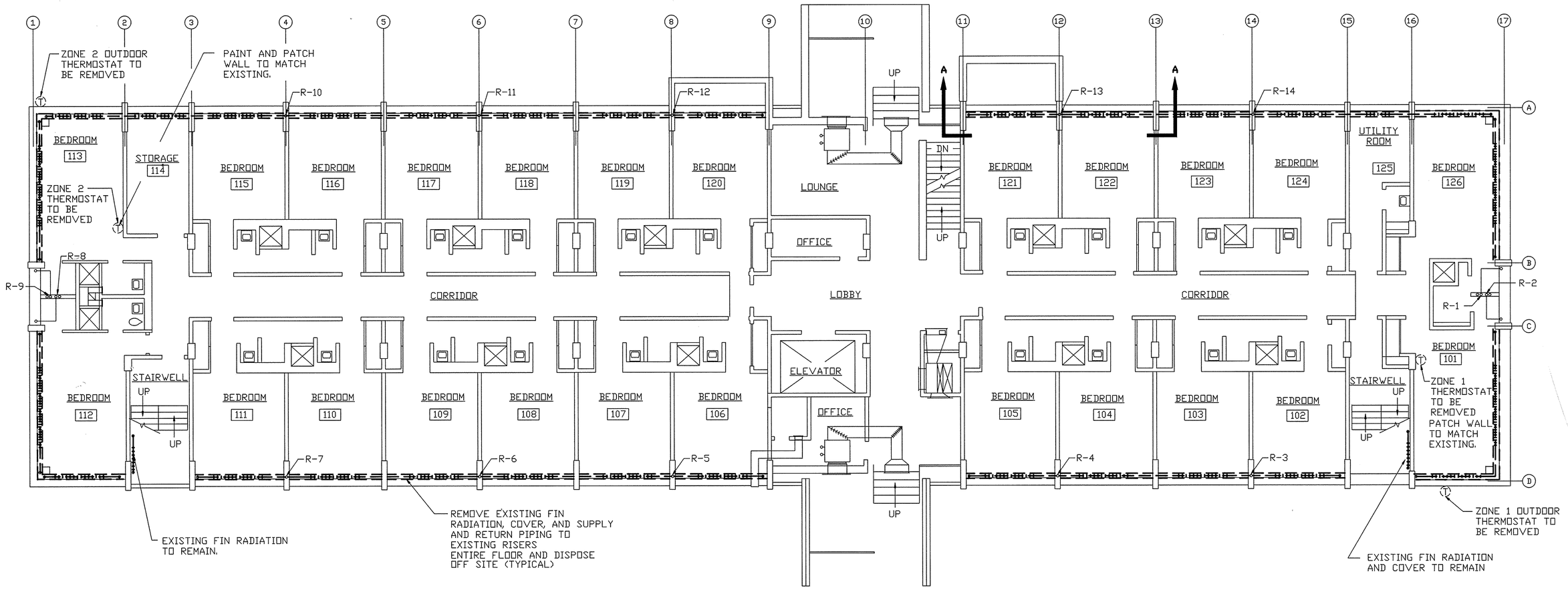

FIRST FLOOR PLAN - DEMOLITION

SCALE: 1/8"=1'-0"

NEW PANEL 'PPD' BUILDING NO. 172
120/208 VOLT 3 PHASE 4 WIRE
LUGS ONLY: 200AMP 15,000 I.C. SYSMETRICAL
LOCATION: BASEMENT AS INDICATED
MOUNTING: FLUSH

CIRCUIT NUMBER	BREAKER POLES	BREAKER AMPERE TRIP	DESCRIPTION	H.P.	KW.	AMPERES A	AMPERES B	AMPERES C	WIRE SIZE	ROOM NUMBERS
1	1	20	FAN COIL UNITS		.75	4.62	4.62	4.62	12	101, 126, 112, 113
2	1	20	FAN COIL UNITS		.625	3.85	3.85	3.85	12	102, 103, 104, 105
3.	1	20	FAN COIL UNITS		.75	4.62	4.62	4.62	12	106, 107, 108, 109, 110, 111
4.	1	20	FAN COIL UNITS		.875	5.39	5.39	5.39	12	114, 115, 116, 117, 118, 119, 120
5.	1	20	FAN COIL UNITS		.625	3.85	3.85	3.85	12	121, 122, 123, 124, 125
6.	1	20	FAN COIL UNITS		.875	5.39	5.39	5.39	12	201, 202, 203, 204, 205, STWELL
7.	1	20	FAN COIL UNITS		.875	5.39	5.39	5.39	12	206, 207, 208, 209, 210
8.	1	20	FAN COIL UNITS		.875	5.39	5.39	5.39	12	211, STRWELL, 212, 213, 214
9.	1	20	FAN COIL UNITS		.875	5.39	5.39	5.39	12	215, 216, 217, 218, 219, 220
10.	1	20	FAN COIL UNITS		.75	4.62	4.62	4.62	12	STRWELL, 222, 223, 224, 225
11.	1	20	FAN COIL UNITS		.375	2.31	2.31	2.31	12	226, 227
12.	1	20	FAN COIL UNITS		.875	5.39	5.39	5.39	12	301, 302, 303, 304, 305, STWELL
13.	1	20	FAN COIL UNITS		.875	5.39	5.39	5.39	12	306, 307, 308, 309, 300
14.	1	20	FAN COIL UNITS		.875	5.39	5.39	5.39	12	311, STRWELL, 312, 313, 314
15.	1	20	FAN COIL UNITS		.875	5.39	5.39	5.39	12	315, 316, 317, 318, 319, 320
16.	1	20	FAN COIL UNITS		.75	4.62	4.62	4.62	12	STRWELL, 322, 323, 324, 325
17.	1	20	FAN COIL UNITS		.375	2.31	2.31	2.31	12	326, 327
18.	1	20	FAN COIL UNITS		.875	5.39	5.39	5.39	12	401, 402, 403, 404, 405, STWELL
18.	1	20	FAN COIL UNITS		.875	5.39	5.39	5.39	12	406, 407, 408, 409, 400
20.	1	20	FAN COIL UNITS		.875	5.39	5.39	5.39	12	411, STRWELL, 412, 413, 414
21.	1	20	FAN COIL UNITS		.875	5.39	5.39	5.39	12	415, 416, 417, 418, 419, 420
22.	1	20	FAN COIL UNITS		.75	4.62	4.62	4.62	12	STRWELL, 422, 423, 424, 425
23.	1	20	FAN COIL UNITS		.375	2.31	2.31	2.31	12	426, 427
24.	1	20	SPARE							
			TOTALS		17.25	105.49	105.49	105.49		

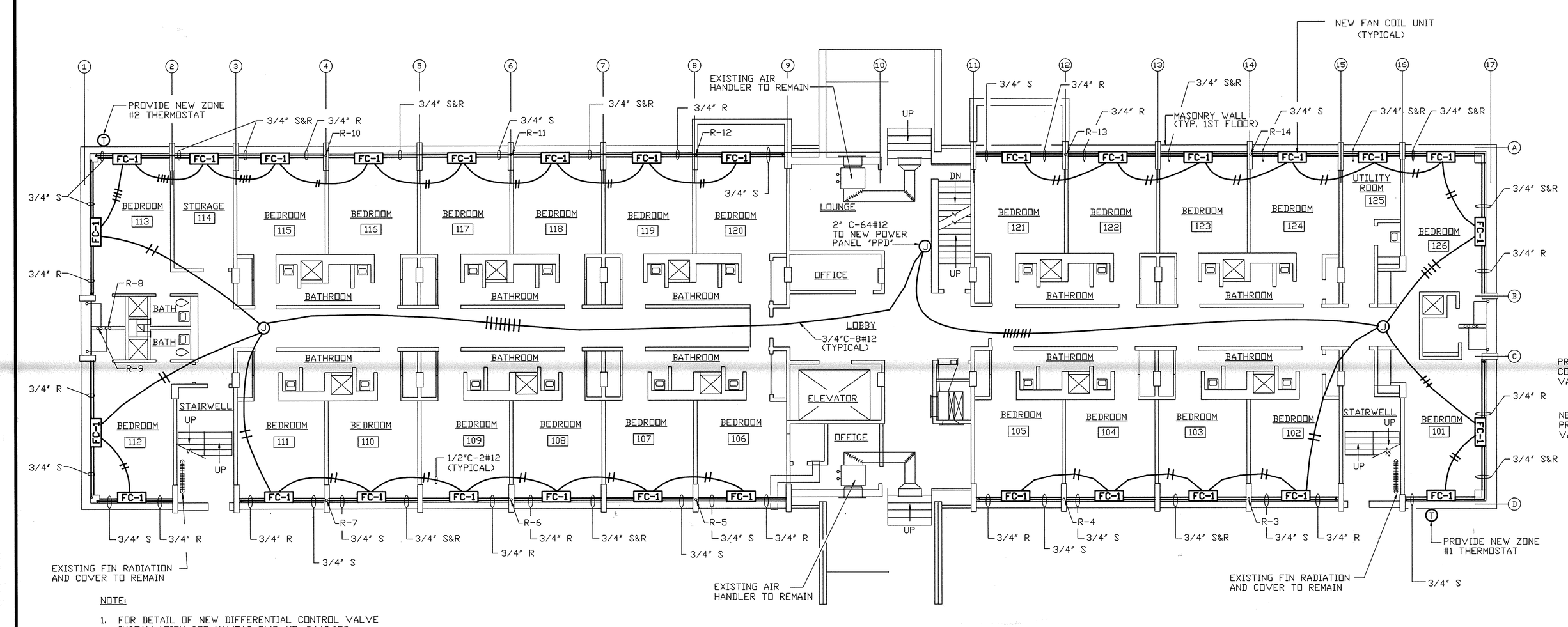

FIRST FLOOR PLAN - NEW WORK

SCALE: 1/8"=1'-0"

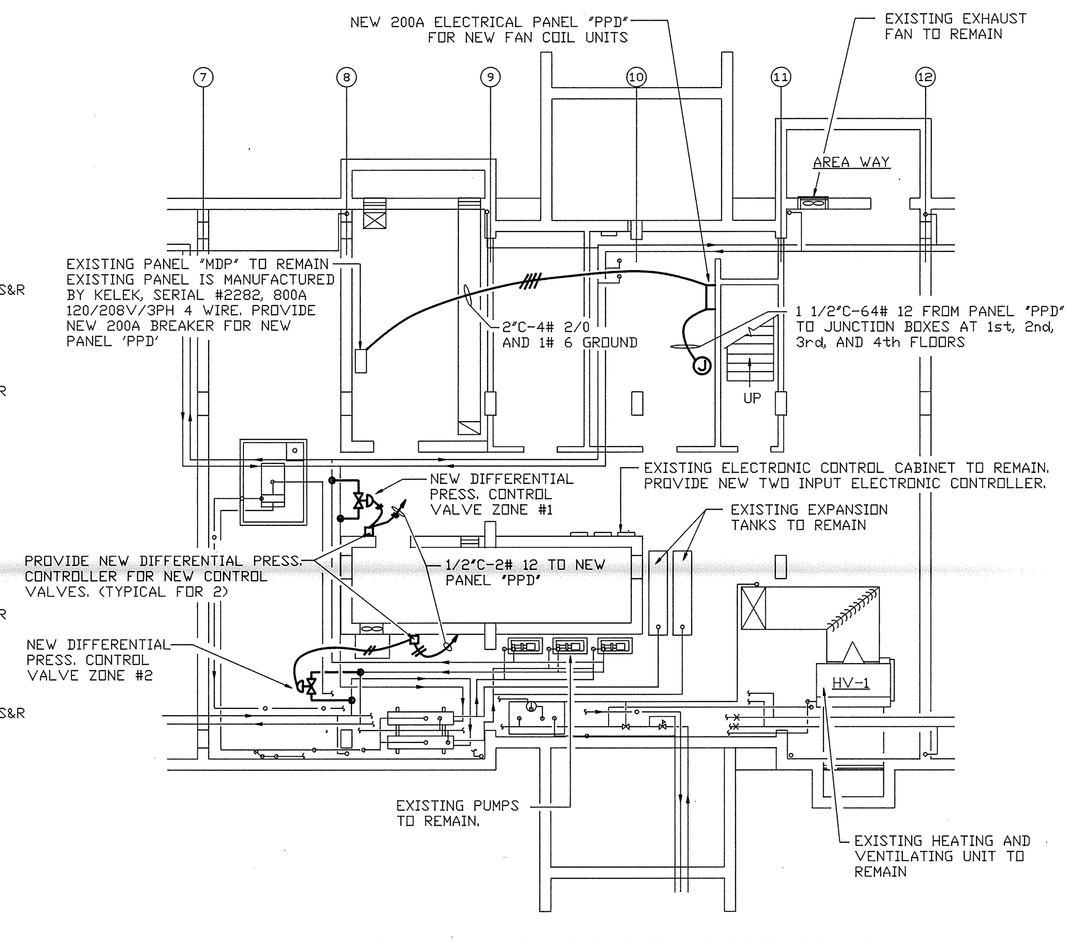

PARTIAL BASEMENT FLOOR PLAN

SCALE: 1/8"=1'-0"

GRAPHIC SCALES

1/8"=1'-0" 0 5 10 15 20 25 30

NOTE:

1. FOR DETAIL OF NEW DIFFERENTIAL CONTROL VALVE INSTALLATION SEE NAVFAC DWG. NO. 2,149,653.
2. FOR SCHEMATIC WIRING DIAGRAM OF NEW DIFFERENTIAL CONTROL VALVE SEE NAVFAC DWG. NO. 2,149,648.
3. SEE PANEL SCHEDULE THIS SHEET FOR CIRCUITING OF NEW FAN COIL UNITS.
4. PROVIDE 1#12 GROUND WIRE TO EACH THERMOSTAT AND CONTROL VALVE LOCATION.
5. CORE DRILL REINFORCED CONCRETE FLOORS FOR CONDUIT RUN BETWEEN FLOORS.
6. ALL FLOORS HAVE PLASTERED CEILINGS ON CONCRETE.
7. SEE NAVFAC DWG. NO. 2,149,648 FOR FAN COIL (FC-1) DETAIL.

E. MICHAEL SWEENEY No. 4240 REGISTERED PROFESSIONAL ENGINEER

NETC DWG. NO. / NETC SK. NO.	29,303-290
DSGN:	R.P.D.
DR:	T.N.
BR:	J. Belveau P.E.
DIR:	
APPROVED / DATE	4/20/92
SATISFACTORY	
DATE	3-31-92

DEPARTMENT OF THE NAVY — NAVAL FACILITIES ENGINEERING COMMAND

NAVAL EDUCATION AND TRAINING CENTER
NEWPORT, RHODE ISLAND

INDIVIDUAL HEATING CONTROLS BLDG. NO'S. 172, 444, AND 678
DEMOLITION, REMOVAL, AND NEW WORK, BUILDING NO. 172
MECHANICAL

SIZE	CODE IDENT NO.	NAVFAC DRAWING NO.
F	80091	2,149,646
SCALE: AS NOTED	SPEC. 04-91-1700	CONSTR. CONTR. NO. N62472-91-C-1700 — SHEET 2 OF 13

REVISIONS				
SYM	ZONE	DESCRIPTION	DATE	APPROVED

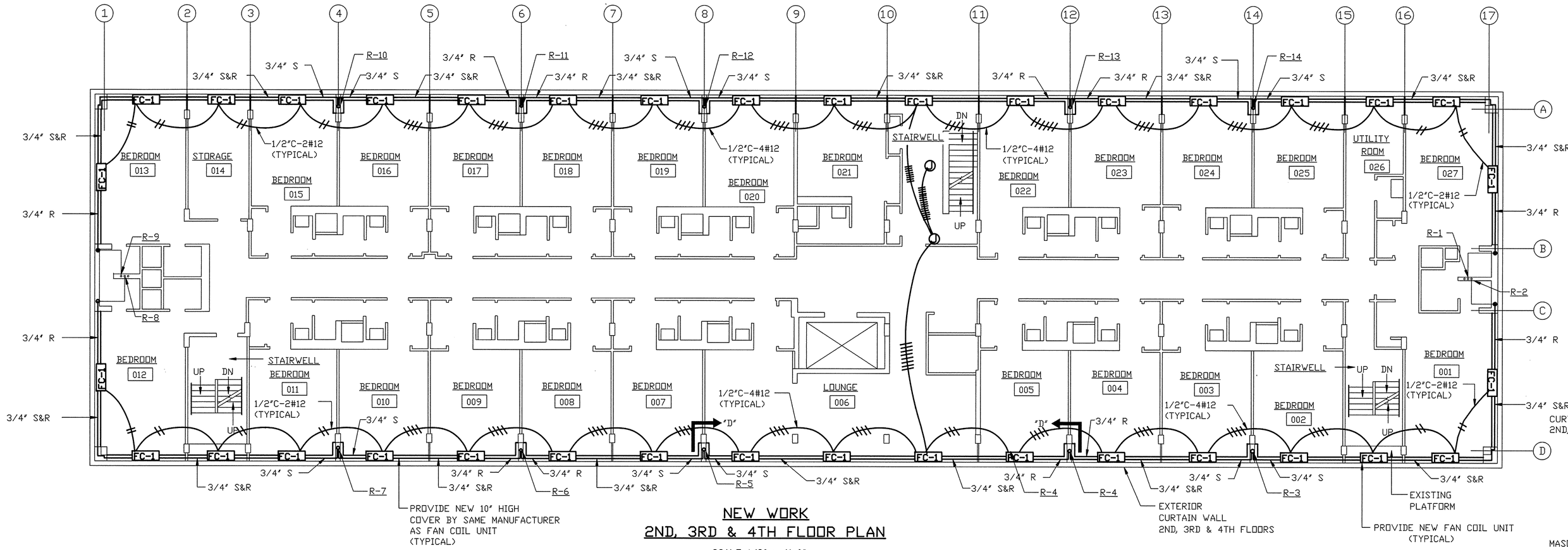

NEW WORK
2ND, 3RD & 4TH FLOOR PLAN

SCALE 1/8" = 1'-0"

NOTE:

1. SEE NEW PANEL 'PPD' SCHEDULE ON NAVFAC DWG. NO. 2,149,646 FOR CIRCUITING OF NEW FAN COIL UNITS.

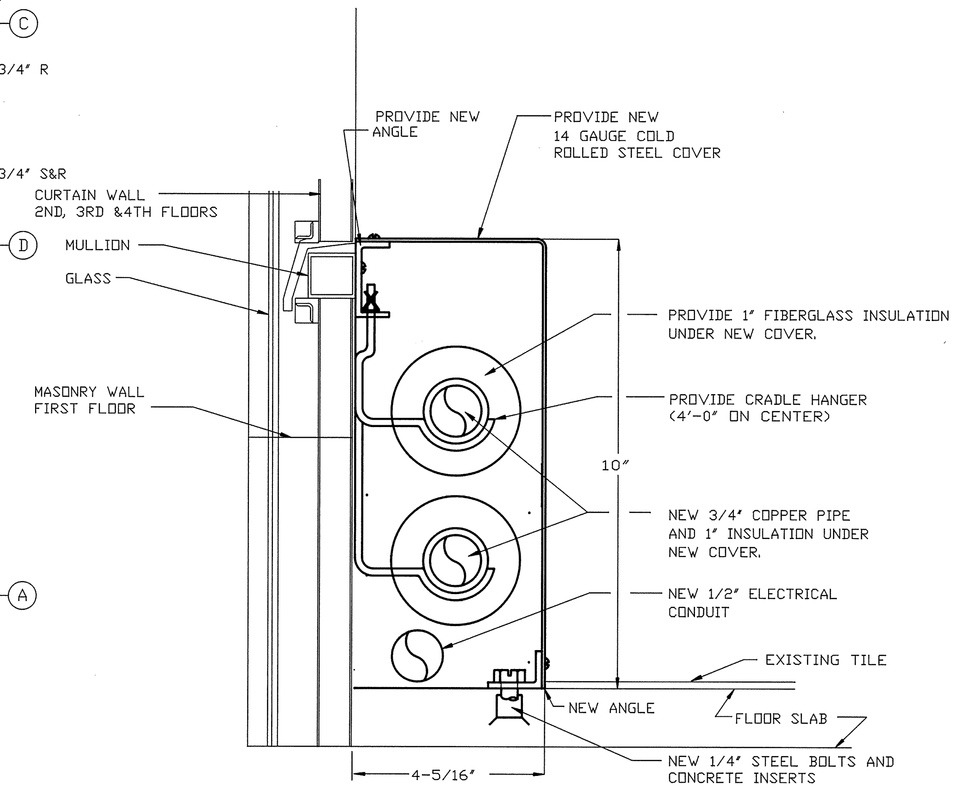

NEW BLANK COVER DETAIL
BUILDING NO. 172

NOT TO SCALE

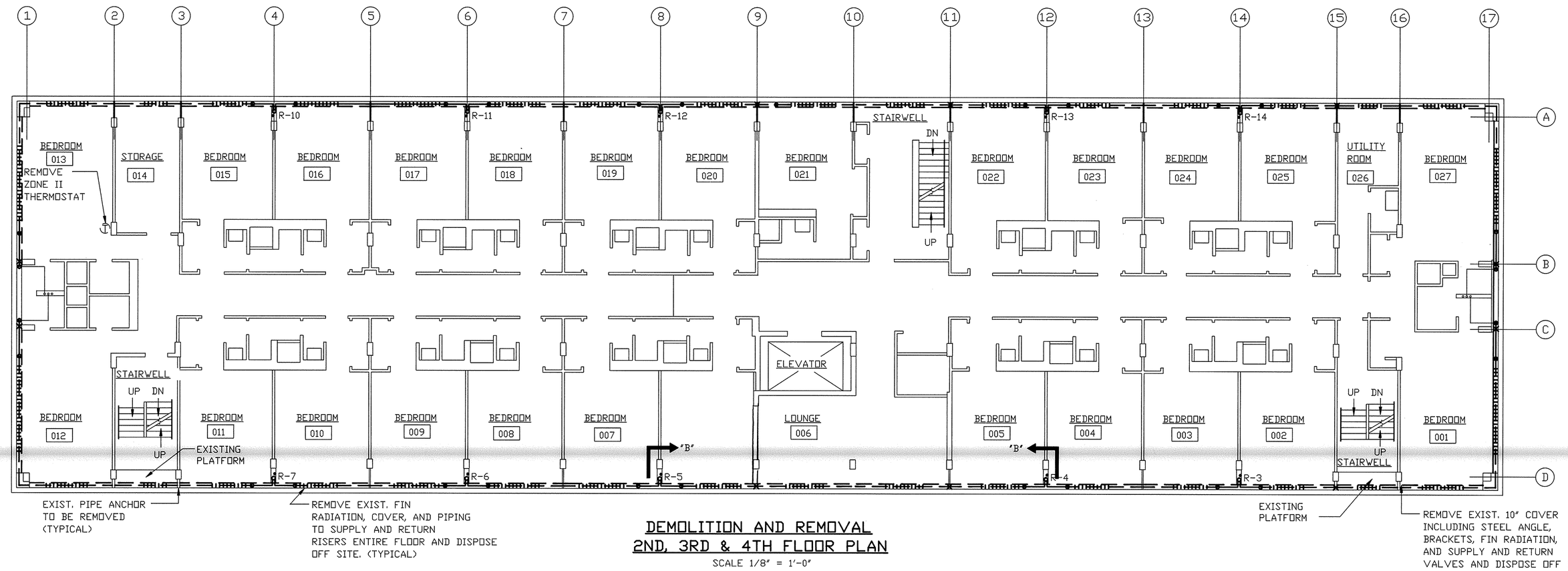

DEMOLITION AND REMOVAL
2ND, 3RD & 4TH FLOOR PLAN

SCALE 1/8" = 1'-0"

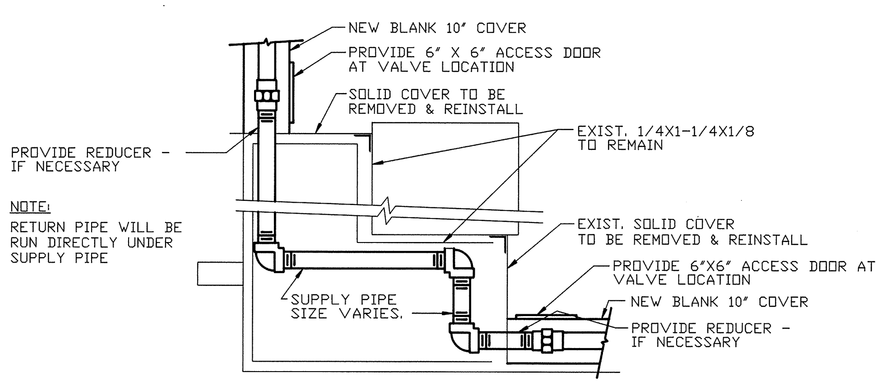

NOTE:
RETURN PIPE WILL BE RUN DIRECTLY UNDER SUPPLY PIPE

TYPICAL CORNER
2ND, 3RD & 4TH FLOORS

NOT TO SCALE

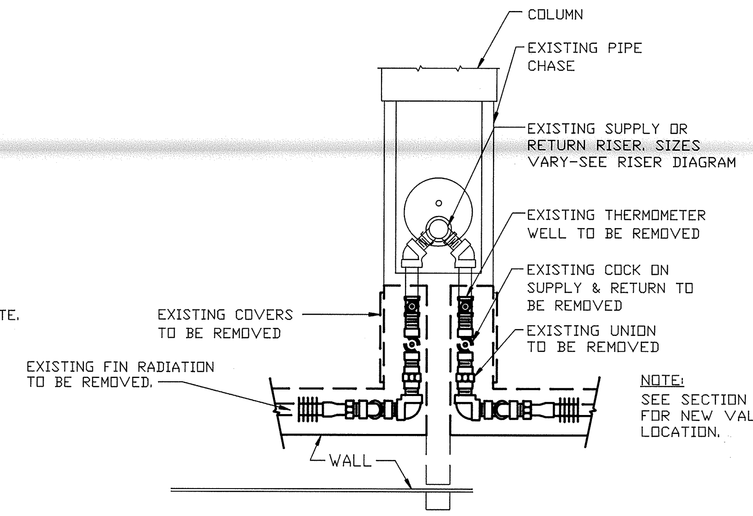

NOTE:
SEE SECTION 'D-D' FOR NEW VALVE LOCATION.

TYPICAL DEMO. RADIATION DETAIL AT RISER
2ND, 3RD, & 4TH FLOORS

NOT TO SCALE

E. MICHAEL SWEENEY
No. 4240
REGISTERED PROFESSIONAL ENGINEER

NETC DWG. NO. / NETC SK. NO.	29,304-290
DSGN	R.P.D.
DR.	S.B.
BR.	
DIR.	
APPROVED	DATE 4/20/92
SATISFACTORY TO	
DATE	3-31-92

DEPARTMENT OF THE NAVY — NAVAL FACILITIES ENGINEERING COMMAND
NAVAL EDUCATION AND TRAINING CENTER
NEWPORT, RHODE ISLAND

INDIVIDUAL HEATING CONTROLS BLD'G. NOS. 172, 444, 678
DEMOLITION REMOVAL AND NEW WORK DETAILS
BUILDING NO. 172

SIZE	CODE IDENT NO.	NAVFAC DRAWING NO.
F	80091	2,149,647
SCALE: AS NOTED		CONSTR. CONTR. NO. N62472-91-C-1700
		SPEC. 04-91-1700 — SHEET 3 OF 13

REVISIONS				
SYM	ZONE	DESCRIPTION	DATE	APPROVED

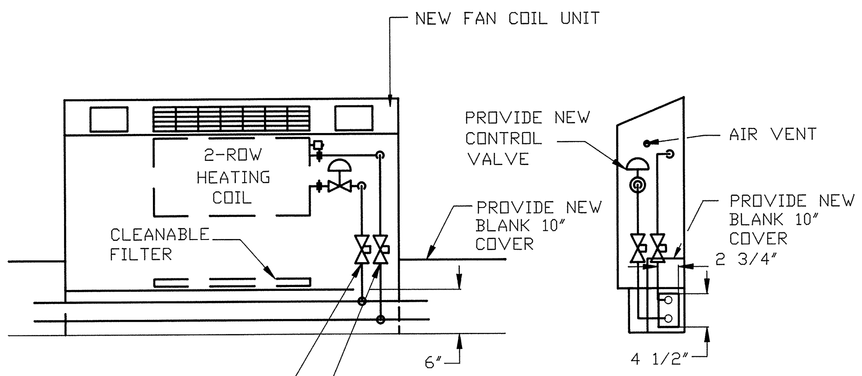

NOTE:
1. PROVIDE THREE SPEED FAN MOTOR RATED 115V/1 PH/60 HZ, 105 WATTS
2. PROVIDE UNIT MOUNTED THERMOSTAT WITH REMOTE BULB, 1-SPDT ACTION
3. PROVIDE UNIT MOUNTED TWO-WAY VALVE, SHUT-OFF, AND BALANCING VALVE.
4. 300 CFM, 11,500 BTU/HR @ .9 GPM

FC-1
TYPICAL FANCOIL UNIT - BUILDING NO. 172

SCALE: 1"= 1'- 0"

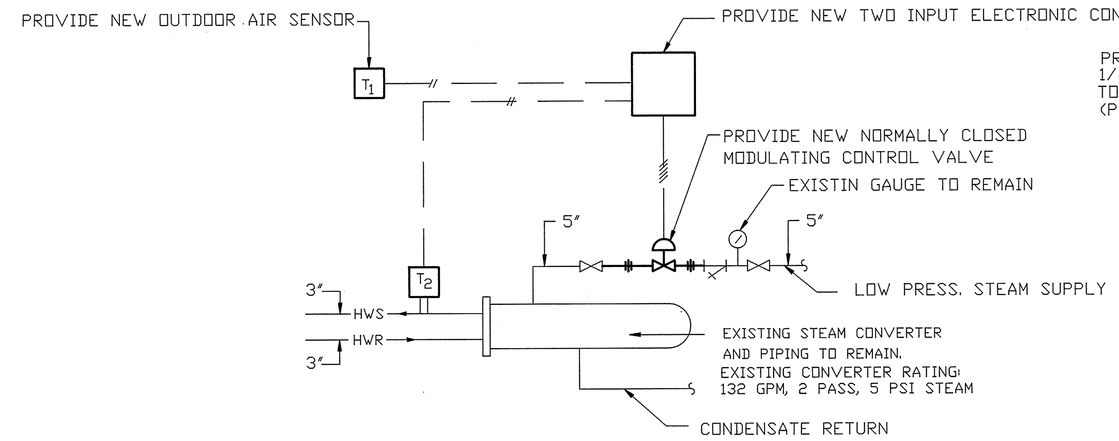

BUILDING NO. 172 CONVERTER TEMPERATURE CONTROL SCHEMATIC (TYPICAL FOR TWO)

NO SCALE

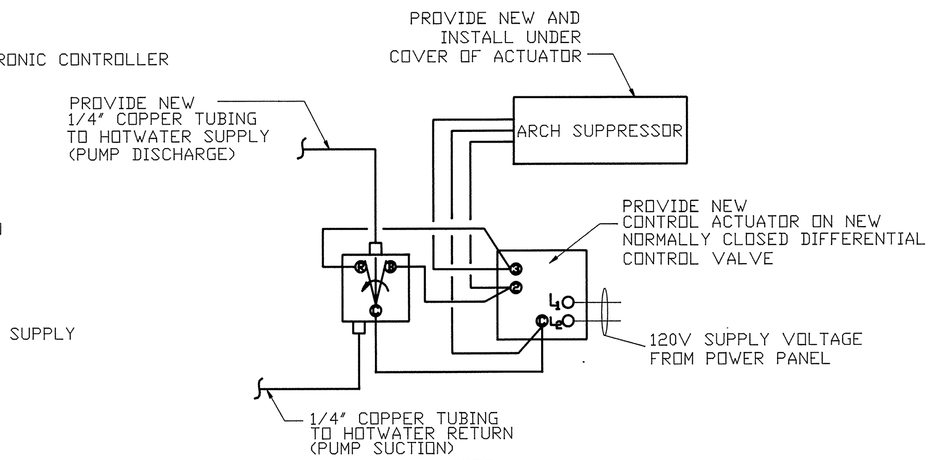

NOTES:
1. R - CONTACT MAKES ON PRESSURE INCREASE.
2. 2 - ROTATES CW OR CLOSES VALVE
3. 3 - ROTATES CCW OR OPENS VALVE.
4. DIFFERENTIAL CONTROL RANGE - 0 TO 60 PSI DIFFERENTIAL - 2 PSI.
5. MOUNT DIFFERENTIAL PRESSURE SWITCH ON BRACKET DESIGNED FOR DEVICE. MOUNT BRACKET ON WALL AS INDICATED.

DIFFERENTIAL PRESSURE CONTROL SCHEMATIC

NO SCALE

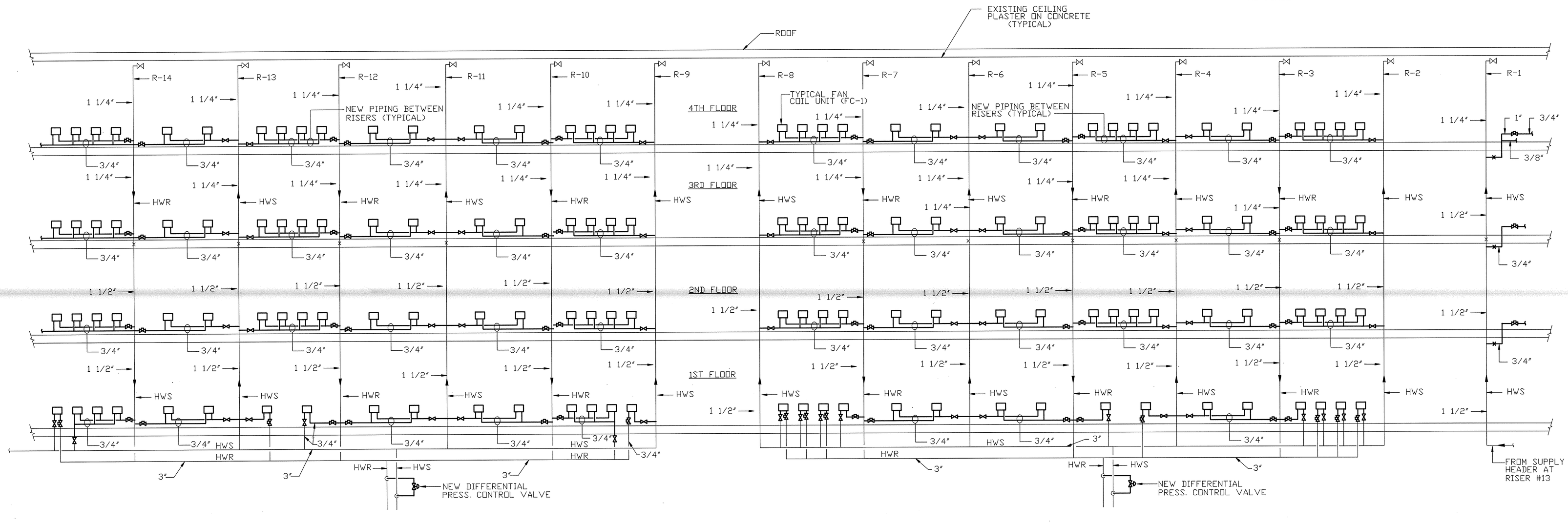

NOTE:
1. ALL RISERS ARE EXISTING AND TO REMAIN.
2. PROVIDE NEW FITTINGS FOR BRANCH LINES TO NEW AND EXISTING HEATING AND EQUIPMENT.

FAN COIL RISER DIAGRAM BUILDING NO. 172

NO SCALE

E. MICHAEL SWEENEY No. 4240 REGISTERED PROFESSIONAL ENGINEER

NETC DWG. NO. / NETC SK. NO.	29,305-290
DSGN	R.P.D.
DR.	T.N.
DR.	
DIR.	
APPROVED	DATE 4/20/92
SATISFACTORY TO	
DATE	3-31-92

DEPARTMENT OF THE NAVY NAVAL FACILITIES ENGINEERING COMMAND
NAVAL EDUCATION AND TRAINING CENTER
NEWPORT, RHODE ISLAND

INDIVIDUAL HEATING CONTROLS BUILDING NOS. 172, 444, AND 678

RISER DIAGRAM AND DETAILS BUILDING NO. 172

SIZE	CODE IDENT NO.	NAVFAC DRAWING NO.
F	80091	2,149,648
SCALE: AS NOTED	SPEC. 04-91-1700	CONSTR. CONTR. NO. N62472-91-C-1700 SHEET 4 OF 13

REVISIONS				
SYM	ZONE	DESCRIPTION	DATE	APPROVED

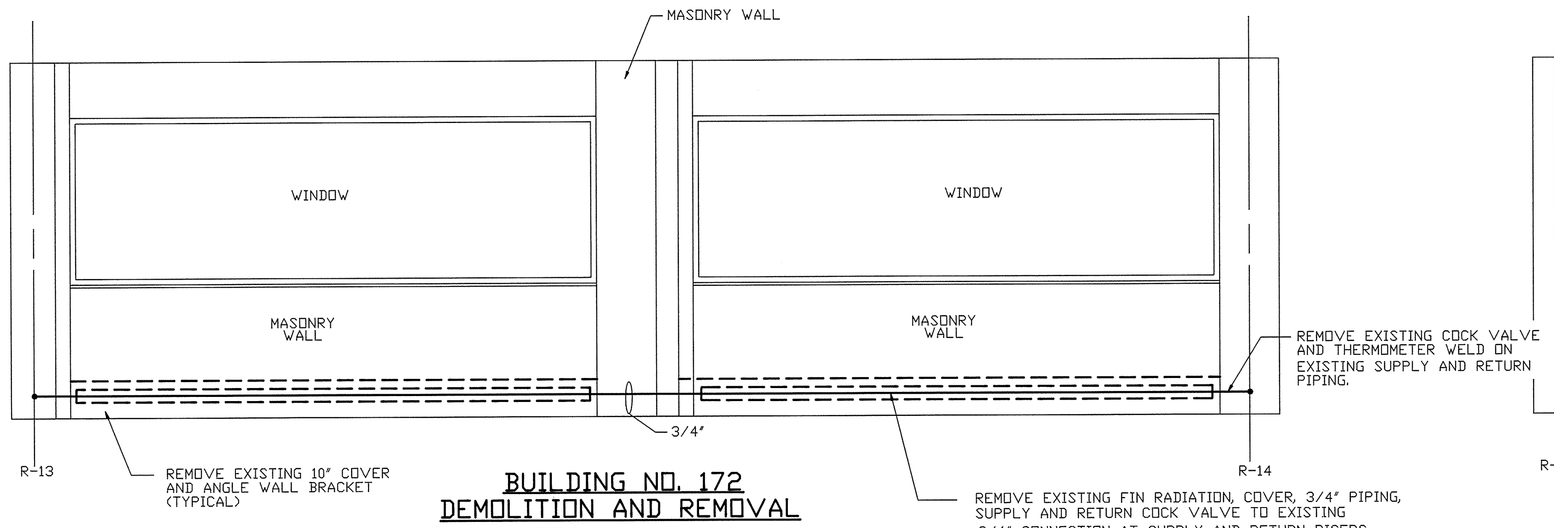

BUILDING NO. 172
DEMOLITION AND REMOVAL
SECTION A-A

SCALE: 1/2" = 1'- 0"

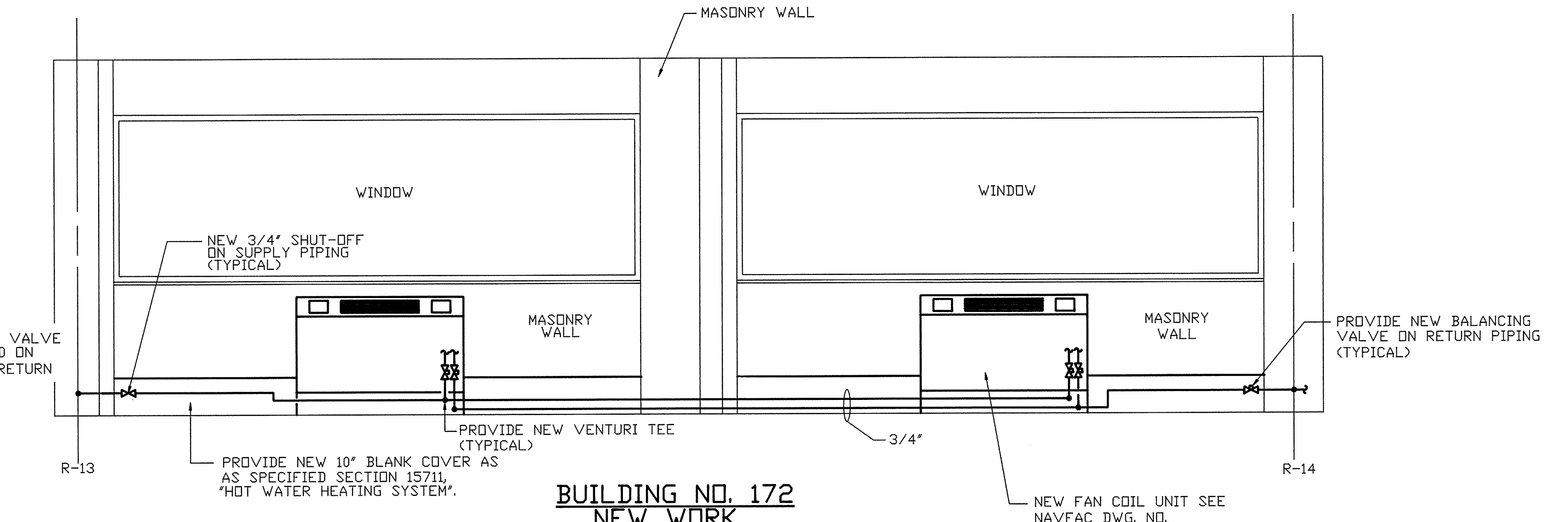

BUILDING NO. 172
NEW WORK
SECTION C-C

SCALE: 1/2" = 1'- 0"

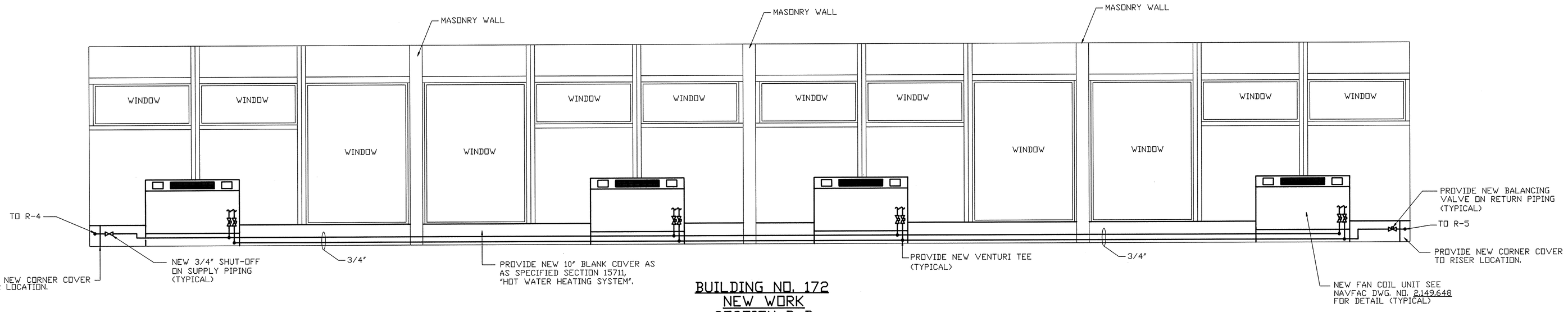

BUILDING NO. 172
NEW WORK
SECTION D-D

SCALE: 1/2" = 1'- 0"

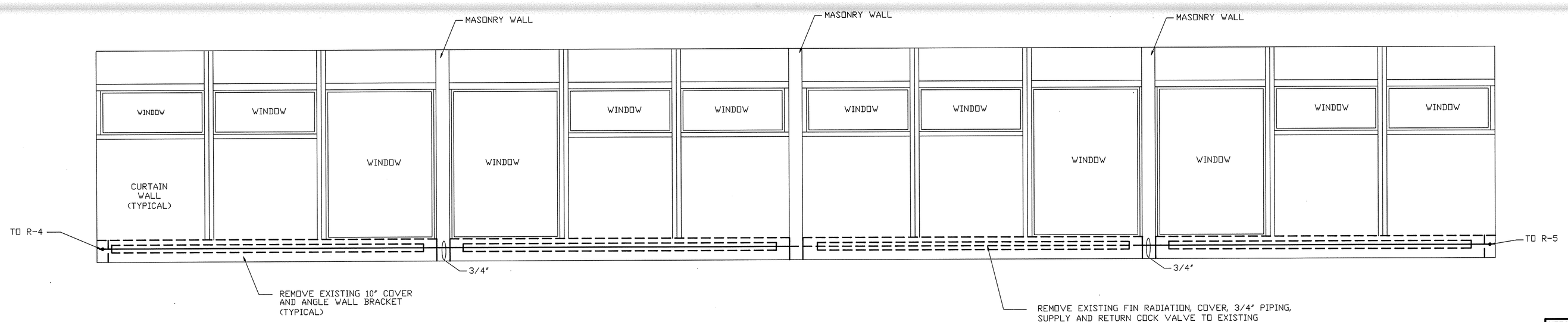

BUILDING NO. 172
DEMOLITION AND REMOVAL
SECTION B-B

SCALE: 1/2" = 1'- 0"

GRAPHIC SCALE

1/2" = 1'- 0" 0 1' 2' 3' 4' 5' 6' 7' 8'

E. MICHAEL SWEENEY
No. 8240
REGISTERED PROFESSIONAL ENGINEER

NETC DWG. NO. / NETC SK. NO. 29,306-290	DEPARTMENT OF THE NAVY — NAVAL FACILITIES ENGINEERING COMMAND NAVAL EDUCATION AND TRAINING CENTER NEWPORT, RHODE ISLAND
DSGN R.P.D.	INDIVIDUAL HEATING CONTROLS BLDG. NO.S. 172, 444, AND 678 SECTIONS AND DETAILS BUILDING NO. 172 MECHANICAL
DR. T.N.	
BR.	
DIR.	
APPROVED: DATE 4/20/92	
SATISFACTORY TO: DATE 3-31-92	SIZE F · CODE IDENT NO. 80091 · NAVFAC DRAWING NO. 2,149,649
	CONSTR. CONTR. NO. N62472-91-C-1700
	SCALE: AS NOTED · SPEC. 04-91-1700 · SHEET 5 OF 13

REVISIONS				
SYM	ZONE	DESCRIPTION	DATE	APPROVED

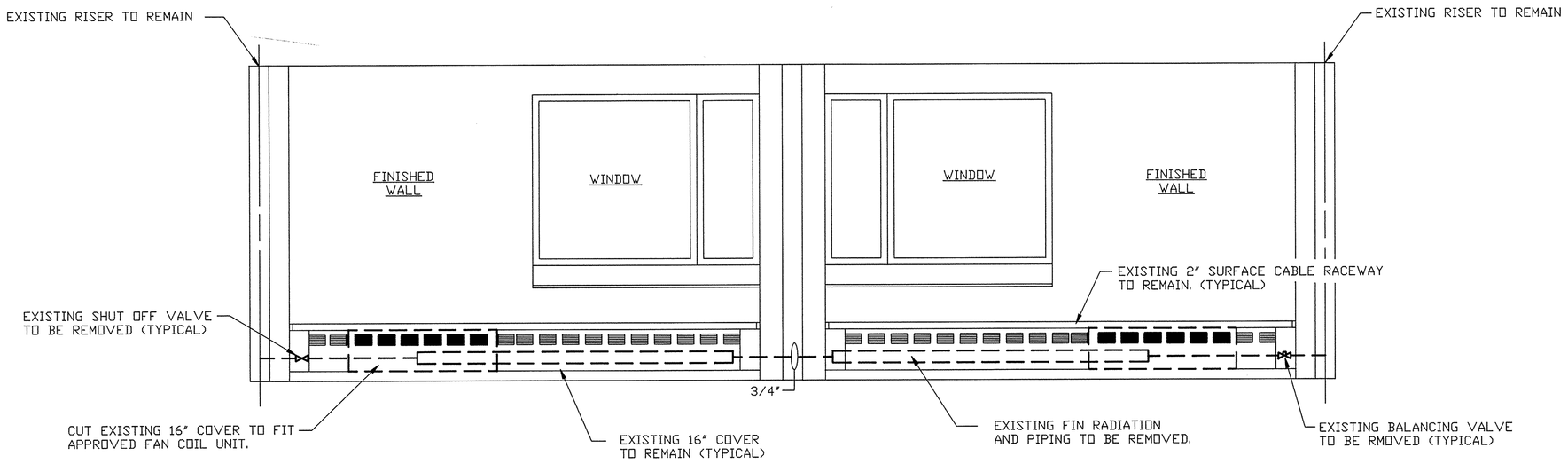

BUILDING NO. 678
DEMOLITION AND REMOVAL
SECTION E-E

SCALE: 1/2"= 1'- 0"

NOTE:

1. FOR DETAIL OF NEW DIFFERENTIAL CONTROL VALVE INSTALLATION SEE NAVFAC DWG. NO. 2,149,653.
2. FOR DETAIL OF NEW DIFFERENTIAL CONTROL VALVE WIRING DIAGRAM SEE NAVFAC DWG. NO. 2,149,648.

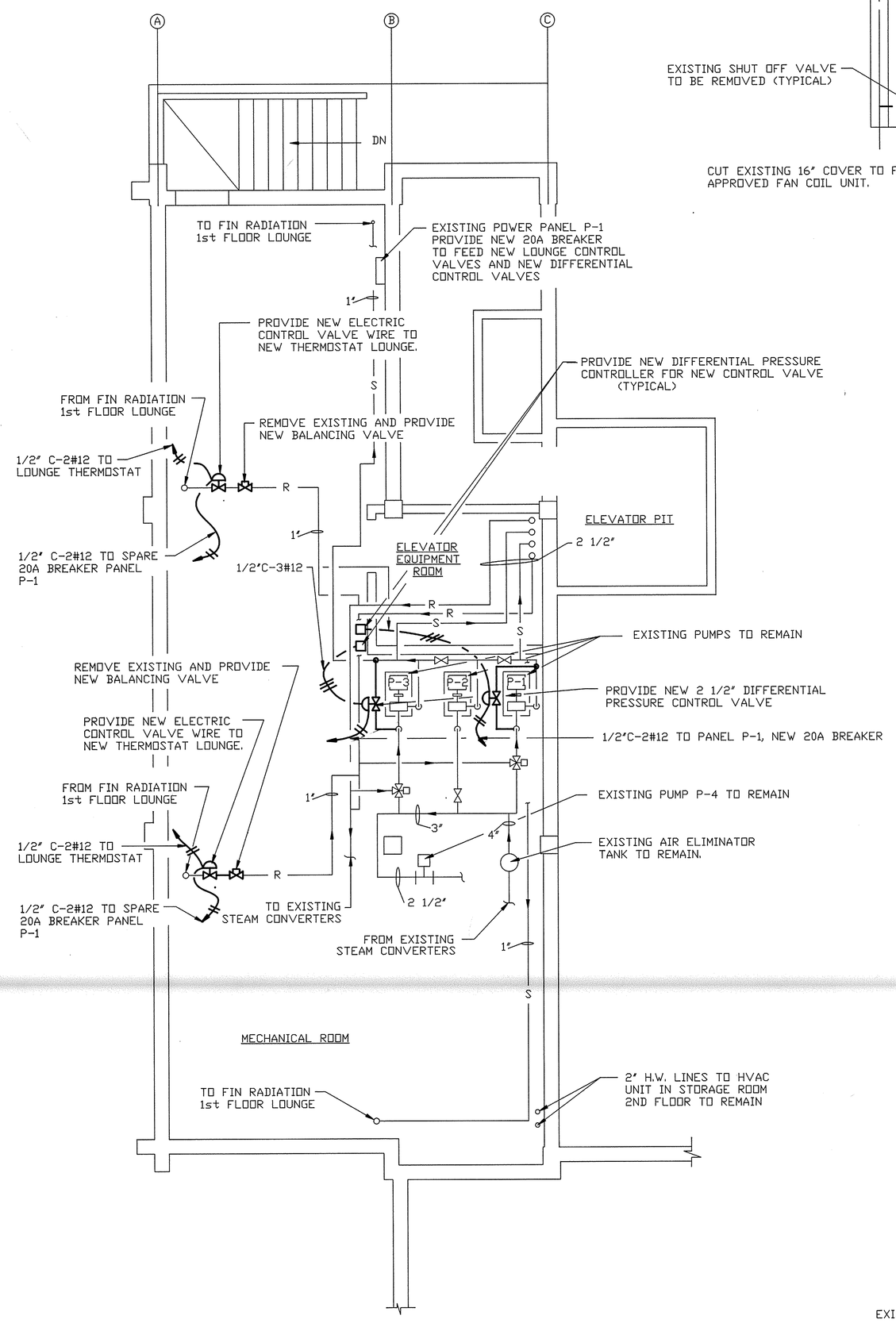

MECHANICAL ROOM PLAN

SCALE: 1/4"= 1'- 0"

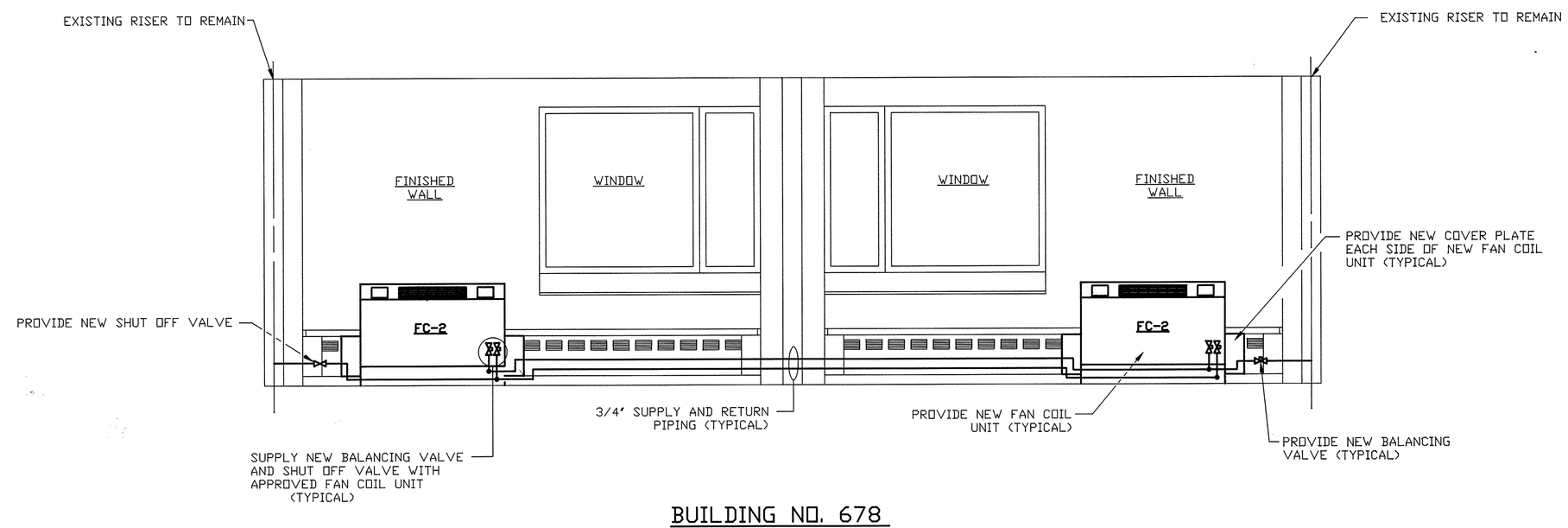

BUILDING NO. 678
NEW WORK
SECTION F-F

SCALE: 1/2"= 1'- 0"

NOTES:

1. NEW HOT WATER SUPPLY AND RETURN PIPING SHALL BE RUN UNDER EXISTING COVER. SUPPLY 3/16" STEEL ROD HANGER EVERY 4' TO SUPPORT NEW SUPPLY AND RETURN PIPING. EXISTING COVER IS MANUFACTURED BY DUNHAM-BUSH TYPE FFT (TYPICAL FOR ALL COVER IN BUILDING NO. 678)

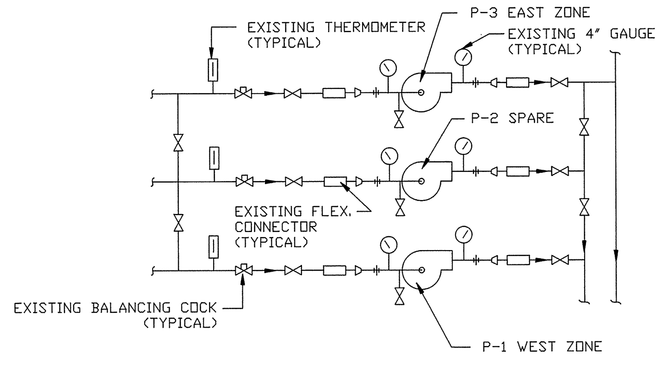

EXISTING PUMP PIPING SCHEMATIC
TYPICAL FOR BUILDING NO. 678
(FOR USE WITH BUILDING BALANCE)

NO SCALE

EXISTING PUMP SCHEDULE

SYMBOL	GPM	HEAD FT	RPM	HP	REMARKS
P-1	60	30'	1750	1	WEST ZONE
P-2	60	30'	1750	1	SPARE
P-3	60	30'	1750	1	EAST ZONE

NOTE:

EXISTING PUMP SCHEDULE IS GIVEN FOR SYSTEM BALANCE. EXISTING PUMPS, GAUGES, THERMOMETERS AND VALVES ARE TO REMAIN.

GRAHIC SCALE

SCALE: 1/4" = 1'- 0" 0 5' 10' 15'

SCALE: 1/2" = 1'- 0" 0 1' 2' 3' 4' 5' 6' 7' 8'

E. MICHAEL SWEENEY No. 4240 REGISTERED PROFESSIONAL ENGINEER

NETC DWG. NO. 29,314-290 NETC SK. NO.	DEPARTMENT OF THE NAVY NAVAL FACILITIES ENGINEERING COMMAND NAVAL EDUCATION AND TRAINING CENTER NEWPORT, RHODE ISLAND
DSGN: R.P.D. DR.: R.P.D. BR.: J. Bowen P.E. DIR. APPROVED DATE 4/20/92	INDIVIDUAL HEATING CONTROLS BLDG. NO.'S 172, 444, AND 678 MECHANICAL ROOM, ELEVATIONS, AND DETAILS MECHANICAL/ELECTRICAL
SATISFACTORY TO DATE 3/31/92	SIZE F · CODE IDENT NO. 80091 · NAVFAC DRAWING NO. 2,149,657 CONSTR. CONTR. NO. N62472-91-C-1700 SCALE: AS NOTED · SPEC. 04-91-1700 · SHEET 13 OF 13