REPAIRS AND ALTERATIONS TO BUILDING 678, CP

DEPARTMENT OF THE NAVY — NAVAL FACILITIES ENGINEERING COMMAND

NAVAL EDUCATION AND TRAINING CENTER

NEWPORT, RHODE ISLAND

CONTRACT NO: #N62472-93-C-1996

LOCATION PLAN

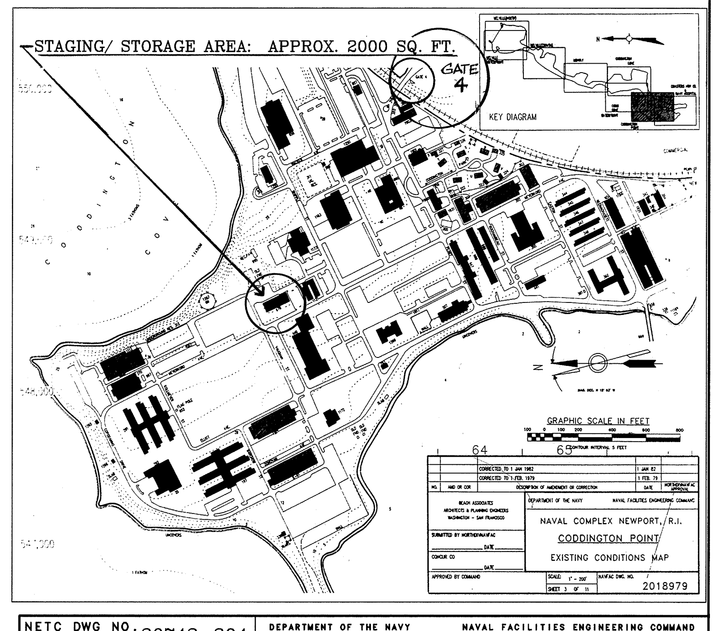

THE LAWRENCE ASSOCIATES
ARCHITECTS / PLANNERS, P.C.
1075 TOLLAND TURNPIKE. MANCHESTER, CONNECTICUT. 06040
(203) 643-2161

APPLIED THERMODYNAMICS ASSOCIATES INC.
CONSULTING ENGINEERS, MECHANICAL & ELECTRICAL
MANSFIELD CENTER, CONNECTICUT. 06250
(203) 456-4554

MOLLEUR & LUCERO
ELEVATOR CONSULTANTS
WALLINGFORD, CONNECTICUT 06492
(203) 294-9824

NETC DWG NO. 30742-304 NETC SK NO.	DEPARTMENT OF THE NAVY — NAVAL FACILITIES ENGINEERING COMMAND NAVAL EDUCATION AND TRAINING CENTER NEWPORT, RHODE ISLAND
DES. AH	REPAIRS AND ALTERATIONS TO: BUILDING #678
DR. RBF	
BR.	
DIR.	
APPROVED / DATE	DWG TITLE: COVER SHEET
SATISFACTORY TO / DATE 11-22-94	SIZE F — CODE IDENT NO. 80091 — NAVFAC DRAWING NO. 2171427
	CONSTR. CONTR. NO. N62472-93-C-1996
	SCALE AS SHOWN — SPEC. 93-C-1996 — SHEET 1 OF 44

REVISIONS			
SYMBOL	DESCRIPTION	DATE	APPR.

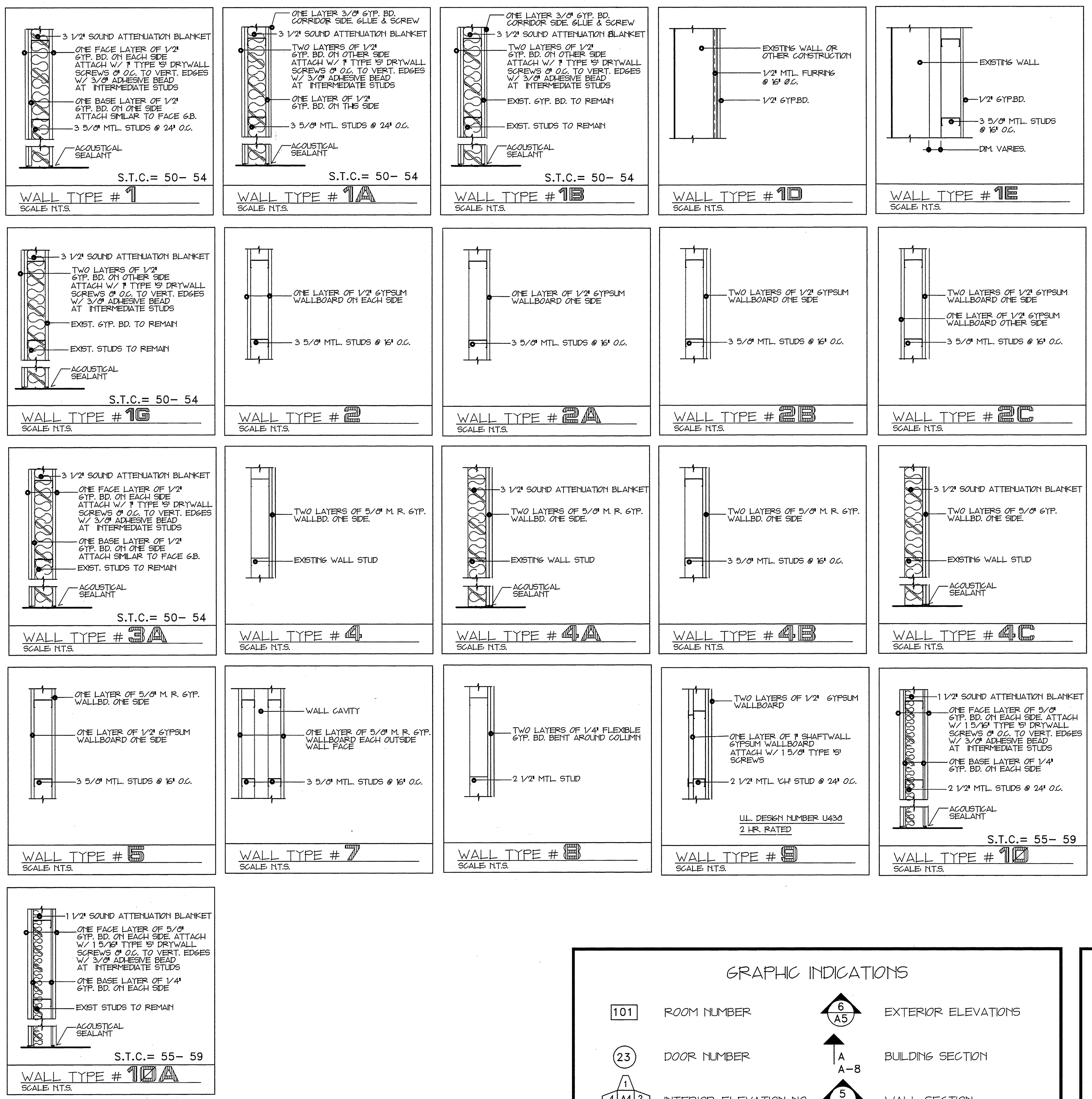

PARTITION TYPES

SEE DRAWING A-5 FOR EXTENT OF SOUND ATTENUATION IN PARTITIONS.

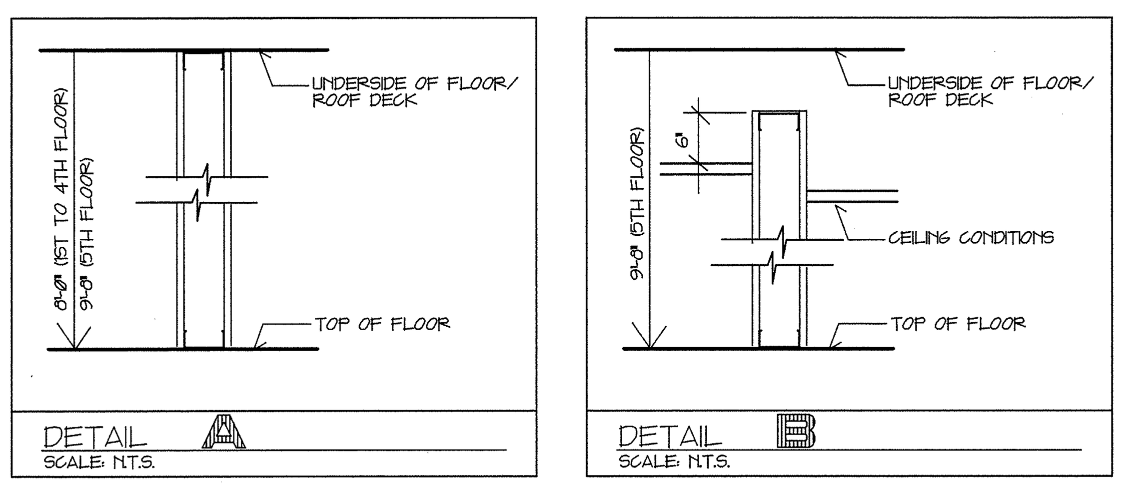

PARTITION TYPES (CROSS SECTION)

PARTITION NOTE:

PROVIDE SOLID WOOD BLOCKING FOR ALL WALL MOUNTED ACCESSORIES & EQUIPMENT.

SIGNAGE:

TYPICAL

1.) ALL DOORS FACING CORRIDOR EXCEPT UNIT DOORS

PROVIDE ONE 2" H. X 12" W. SIGN. ALLOW 10 CHARACTERS PER SIGN. ACTUAL MESSAGE SHALL BE PROVIDED BEFORE SUBMISSION OF SHOP DRAWINGS.

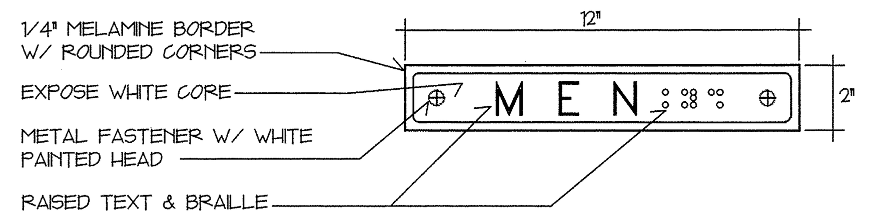

2.) SIGNS AT UNIT DOORS

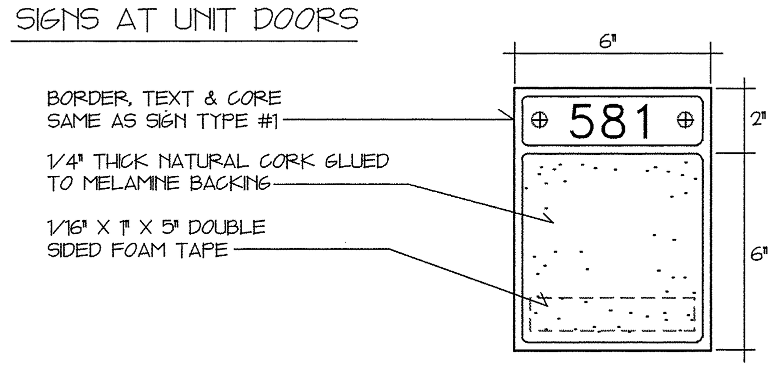

3.) SPECIAL PURPOSE AND DIRECTIONAL SIGNS

PROVIDE 20 ADDITIONAL 2" H. X 12" W. SIGNS WITH 10 CHARACTERS EACH FOR SIGNS SUCH AS "PHONES", "VENDING MACHINES" ETC.

EXTERIOR SIGNS

4.) PROVIDE ONE 12" W. X 18" H. EMBOSSED STEEL MEETING THE ANSI 117.1 REQUIREMENTS MOUNTED ON 8' LONG U-CHANNEL WITH BAKED ENAMEL FINISH. DRIVE CHANNEL INTO THE GROUND 3'-6". HEIGHT OF SIGN SHALL BE 4'-6" ABOVE PAVEMENT.

5.) PROVIDE ONE DIRECTIONAL SIGN 12" X 12" WITH THE INTERNATIONAL SYMBOL FOR ACCESSIBILITY AND A DIRECTIONAL ARROW POINTING TOWARDS THE RAMP. MOUNT IN A VISIBLE LOCATION ON THE BUILDING WALL AS DIRECTED BY THE OWNER.

GENERAL NOTE:

1. ALL REFERENCES TO 'NEW' WORK HAVE BEEN USED ON A LIMITED BASIS ON THE DRAWINGS. WHERE IT DOES NOT SAY 'EXISTING' THE CONTRACTOR SHALL ASSUME IT TO MEAN THAT THE ITEM OR CONDITION IS 'NEW' AND SHALL PROVIDE THE SAME. HOWEVER IN A FEW INSTANCES THE REFERENCES TO 'NEW' HAVE BEEN USED FOR CLARITY.

GRAPHIC INDICATIONS

- 101 — ROOM NUMBER
- 23 — DOOR NUMBER
- 1 / 4 A4 2 / 3 — INTERIOR ELEVATION NO.
- B — WINDOW TYPE
- 12 / A14 — DETAIL NUMBER
- A — MATCH LINE
- 6 / A5 — EXTERIOR ELEVATIONS
- A / A-8 — BUILDING SECTION
- 5 / A7 — WALL SECTION
- 1 / A — COLUMN GRID LINES
- CONTROL POINT
- 10 — PARTITION TYPE

MATERIALS LEGEND

- CONCRETE
- CONCRETE BLOCK
- BRICK
- STONE
- COMPACTED GRAVEL
- CRUSHED STONE
- BITUMINOUS PAVING
- UNDISTURBED SOIL
- METAL
- GYPSUM BOARD
- PLYWOOD
- WOOD FRAMING- THROUGH MEMBER
- WOOD FRAMING- INTERRUPTED MEMBER
- FINISH WOOD
- BATT INSULATION
- ACOUSTICAL INSULATION
- RIGID INSULATION
- CERAMIC/QUARRY TILE
- BUILT-UP ROOFING
- ACOUSTICAL TILE
- PLASTIC LAMINATE
- CARPETING

ABBREVIATION LIST

Abbr.	Meaning	Abbr.	Meaning	Abbr.	Meaning
&	AND	F.A.	FIRE ALARM	OV.	OVERALL
∠	ANGLE	F.C.	FIRE CODE	O.C.	ON CENTER
@	AT	F.D.	FLOOR DRAIN	O.D.	OUTSIDE DIAMETER
℄	CENTERLINE	FND.	FOUNDATION	O.H.	OVERHEAD
ø	DIAMETER OR ROUND	F.E.	FIRE EXTINGUISHER	OPNG.	OPENING
#	POUND OR NUMBER	F.E.C.	FIRE EXTINGUISHER CABINET	OPP.	OPPOSITE
A/C	AIR CONDITIONER	F.H.C.	FIRE HOSE CABINET	PL.	PLATE
ACOUS.	ACOUSTICAL	FIN.	FINISH	PL.LAM.	PLASTIC LAMINATE
A.D.	AREA DRAIN	FL.	FLOOR	PLYWD.	PLYWOOD
ADJ.	ADJUSTABLE	FLASH.	FLASHING	PR.	PAIR
A.F.F.	ABOVE FINISH FLOOR	FLUOR.	FLUORESCENT	PREF.	PREFINISHED
AGGR.	AGGREGATE	F.R.	FIRE RETARDANT	PT.	POINT OR PAINT
AL.	ALUMINUM	F.S.P.	FIRE STAND PIPE	P.T.	PRESSURE TREATED
APPROX.	APPROXIMATELY	FT.	FOOT OR FEET	PTD.	PAINTED
ARCH.	ARCHITECTURAL	FTG.	FOOTING	P.T.M.	PATCH TO MATCH
B.C.	BLOCK COURSE	FURR.	FURRING	PTN.	PARTITION
BD.	BOARD	GA.	GAUGE	Q.T.	QUARRY TILE
BITUM.	BITUMINOUS	GALV.	GALVANIZED	R.	RISER
B.F.E.	BOTTOM OF FOOTING ELEVATION	G.B.	GRAB BAR	RAD.	RADIUS
BLDG.	BUILDING	GL.	GLASS	R.D.	ROOF DRAIN
BLK.	BLOCK	GYP.	GYPSUM	REF.	REFLECTED
BLKG.	BLOCKING	H.B.	HOSE BIBB	REFR.	REFRIGERATOR
BM.	BEAM	H.C.	HOLLOW CORE	REINF.	REINFORCED
B.N.	BULLNOSE	HDWD.	HARDWOOD	REQ'D.	REQUIRED
BOT.	BOTTOM	HDWE.	HARDWARE	RESIL.	RESILIENT
B.T.F.	BEAT TO FIT	H.M.	HOLLOW METAL	RM.	ROOM
CAB.	CABINET	HORIZ.	HORIZONTAL	R.O.	ROUGH OPENING
C.B.	CATCH BASIN	HR.	HOUR	R.W.L.	RAIN WATER LEADER
CEM.	CEMENT	HT.	HEIGHT	S.C.	SOLID CORE
CER.	CERAMIC	HVAC	HEATING, VENTILATING AND AIR CONDITIONING	SCHED.	SCHEDULE
C.I.	CAST IRON	I.D.	INSIDE DIAMETER	SECT.	SECTION
C.J.	CONTROL JOINT	IN.	INCH	S.H.	SHOWER HEAD
CLG.	CEILING	INSUL.	INSULATION	SIM.	SIMILAR
CLKG.	CAULKING	INT.	INTERIOR	SPEC.	SPECIFICATION
CLO.	CLOSET	I.P.S.	IRON PIPE SECTION	SQ.	SQUARE
CLR.	CLEAR	JAN.	JANITOR	S.S.	STAINLESS STEEL
CMU	CONCRETE MASONRY UNIT	JT.	JOINT	STA.	STATION
COL.	COLUMN	KIT.	KITCHEN	STD.	STANDARD
CONC.	CONCRETE	LAB.	LABORATORY	STL.	STEEL
CONSTR.	CONSTRUCTION	LAM.	LAMINATE	STOR.	STORAGE
CONT.	CONTINUOUS	LAV.	LAVATORY	STRUCT.	STRUCTURAL
CORR.	CORRIDOR	LT.	LIGHT	SUSP.	SUSPENDED
C.U.H.	CABINET UNIT HEATER	MATL.	MATERIAL	T	TOILET
DBL.	DOUBLE	MAX.	MAXIMUM	TEL.	TELEPHONE
D.F.	DRINKING FOUNTAIN	M.C.	MEDICINE CABINET	T&G	TONGUE & GROOVE
DET.	DETAIL	MDO	MEDIUM DENSITY OVERLAY	THK.	THICK
DIA.	DIAMETER	MECH.	MECHANICAL	T.B.S.E.	TOP OF BRICK SHELF ELEVATION
DIM.	DIMENSION	MEMB.	MEMBRANE	T.S.E.	TOP OF STEEL ELEVATION
DN.	DOWN	M.E.P.	MECHANICAL, ELECTRICAL, PLUMBING	T.W.E.	TOP OF WALL ELEVATION
DWG.	DRAWING	MFR.	MANUFACTURER	TYP.	TYPICAL
EA.	EACH	MH.	MANHOLE	U.O.N.	UNLESS OTHERWISE NOTED
E.J.	EXPANSION JOINT	MIN.	MINIMUM	UR.	URINAL
EL.	ELEVATION	MISC.	MISCELLANEOUS	VERT.	VERTICAL
ELEC.	ELECTRICAL	M.O.	MASONRY OPENING	V.E.S.	VITREOUS EPOXY SURFACING
ELEV.	ELEVATOR	M.R.	MOISTURE RETARDANT	V.W.C.	VINYL WALL COVERING
EMER.	EMERGENCY	MTD.	MOUNTED	W/	WITH
ENCL.	ENCLOSURE	MTL.	METAL	W.C.	WATER CLOSET
EQ.	EQUAL	N.I.C.	NOT IN CONTRACT	WD.	WOOD
EQT.	EQUIPMENT	NO.	NUMBER	W/O	WITHOUT
E.W.	EACH WAY	NOM.	NOMINAL	WP.	WATERPROOF
E.W.C.	ELECTRIC WATER COOLER	N.T.S.	NOT TO SCALE	WT.	WEIGHT
EXST.	EXISTING			W.W.M.	WELDED WIRE MESH
EXT.	EXTERIOR				
E.I.F.S.	EXTERIOR INSULATION FINISH SYSTEMS				

LIST OF DRAWINGS

NAVFAC DWG. NO.	SHEET NO.		TITLE
2171427	1	1 OF 44	TITLE SHEET
2171428	L-1	2 OF 44	SITE PLAN (TEST BORING INFO ONLY)
2171429	A-1	3 OF 44	INFORMATION SHEET, WALL TYPES, BATHROOM FIXTURE SCHEDULE
2171430	A-2	4 OF 44	DEMOLITION PLANS
2171431	A-3	5 OF 44	DEMOLITION ELEVATIONS & SECTIONS
2171432	A-4	6 OF 44	FLOOR PLANS
2171433	A-5	7 OF 44	REFLECTED CEILING PLANS & DETAILS
2171434	A-6	8 OF 44	ENLARGED PLANS
2171435	A-7	9 OF 44	INTERIOR ELEVATIONS
2171436	A-8	10 OF 44	EXTERIOR ELEVATIONS
2171437	A-9	11 OF 44	WALL SECTIONS & DETAILS
2171438	A-10	12 OF 44	PLAN DETAILS
2171439	A-11	13 OF 44	SECTIONS, DETAILS, MILLWORK
2171440	A-12	14 OF 44	WINDOW DETAILS
2171441	A-13	15 OF 44	WINDOW DETAILS
2171442	A-14	16 OF 44	DOOR SCHEDULE, DETAILS
2171443	AS-1	17 OF 44	ASBESTOS REMOVAL NOTES
2171444	AS-2	18 OF 44	ASBESTOS REMOVAL PLANS
2171445	SU-1	19 OF 44	SITE UTILITIES PLAN
2171446	FP-1	20 OF 44	FIRE PROTECTION PLANS
2171447	FP-2	21 OF 44	FIRE PROTECTION RISER DIAGRAM
2171448	P-1	22 OF 44	PLUMBING DEMOLITION
2171449	P-2	23 OF 44	PLUMBING PLANS, SCHEDULE
2171450	P-3	24 OF 44	PLUMBING PLANS, RISER DIAGRAMS
2171451	M-1	25 OF 44	HVAC DEMOLITION PLANS, VENTILATION DEMOLITION, RISER DIAGRAMS
2171452	M-2	26 OF 44	HEATING RISER DEMOLITION DIAGRAM
2171453	M-3	27 OF 44	HVAC 1ST FLOOR PLAN, DETAILS
2171454	M-4	28 OF 44	HVAC FLOOR PLANS, CORRIDOR VENTILATION SECTION
2171455	M-5	29 OF 44	MECH. ROOM DEMOLITION PLAN, PLAN, DETAILS
2171456	M-6	30 OF 44	MECH. ROOM VENTILATION DEMOLITION PLAN, VENTILATION PLAN
2171457	M-7	31 OF 44	MECH. ROOM PIPING DEMOLITION DETAIL, PIPING DETAIL
2171458	M-8	32 OF 44	HEATING RISER DIAGRAMS
2171459	M-9	33 OF 44	EXHAUST RISER DIAGRAMS
2171460	M-10	34 OF 44	DDC SYSTEM ARCHITECTURE DIAGRAM
2171461	M-11	35 OF 44	HVAC UNIT PLANS, SECTIONS, DETAILS
2171462	M-12	36 OF 44	HVAC SCHEDULES
2171463	E-1	37 OF 44	ELECTRICAL DEMOLITION PLANS
2171464	E-2	38 OF 44	MECH. ROOM ELECTRICAL DEMOLITION PLAN, ELECTRICAL PLAN
2171465	E-3	39 OF 44	1ST FLOOR LIGHTING, POWER, FIRE ALARM PLANS
2171466	E-4	40 OF 44	POWER & LIGHTING PLANS, DETAILS
2171467	E-5	41 OF 44	UNIT ELECTRICAL PLANS, DETAILS
2171468	E-6	42 OF 44	ELECTRICAL DIAGRAMS
2171469	E-7	43 OF 44	LIGHTING FIXTURE INFORMATION
2171470	E-8	44 OF 44	CABLE T.V. RISER DIAGRAMS

TOILET ACCESSORIES SCHEDULE

GENERAL NOTES:
1. All accessories for the handicapped shall be mounted as shown.
2. Toilet accessories shown below are for each room.

NO.	ROOM NAME	MIRROR 24" X 36"	MEDICINE CABINET WITH MIRROR	TOILET TISSUE HOLDER	COMBINATION PAPER TOWEL HOLDER/ WASTE RECEPTACLE UNIT	SOAP DISPENSER	SANITARY NAPKIN DISPENSER/ DISPOSAL	GRAB BARS	TOWEL BARS	ROBE HOOK	ASH TRAY	SHOWER CURTAIN RODS	SHOWER CURTAIN AND HOOKS
06	TYP. BATHROOMS UNIT A, B AND OPPOSITES		o	o					2			o	o
119	H.C. TOILET (WOMEN)	o		o	o	o	o	o		o			
120	H.C. TOILET (MEN)	o		o	o	o		o		o			

STATE OF CONNECTICUT · ANWAR HOSSAIN · NO. 6399 · LICENSED ARCHITECT
STATE OF CONNECTICUT · THE LAWRENCE ASSOCIATES ARCHITECTS/PLANNERS, P.C. · NO. 79 · CORPORATE PRACTICE OF ARCHITECTURE

THE LAWRENCE ASSOCIATES
ARCHITECTS / PLANNERS, P.C.
1075 TOLLAND TURNPIKE, MANCHESTER, CONNECTICUT, 06040
(203) 643-2161

NETC DWG NO. / NETC SK NO.	30744-304
DES.	AH
DR.	RBF
BR.	[signature] RA 12/5/94
DIR.	
APPROVED / DATE	[signature] PE 12/12/94
SATISFACTORY TO	[signature]
DATE	1/12/94

DEPARTMENT OF THE NAVY — NAVAL FACILITIES ENGINEERING COMMAND
NAVAL EDUCATION AND TRAINING CENTER
NEWPORT, RHODE ISLAND

REPAIRS AND ALTERATIONS TO:
BUILDING #678

DWG TITLE: INFORMATIONAL SHEET / TOILET ACCESSORY SCHED.

SIZE	CODE IDENT NO.	NAVFAC DRAWING NO.
F	80091	2171429
SCALE: AS SHOWN	SPEC. 93-C-1996	CONSTR. CONTR. NO. N62472-93-C-1996

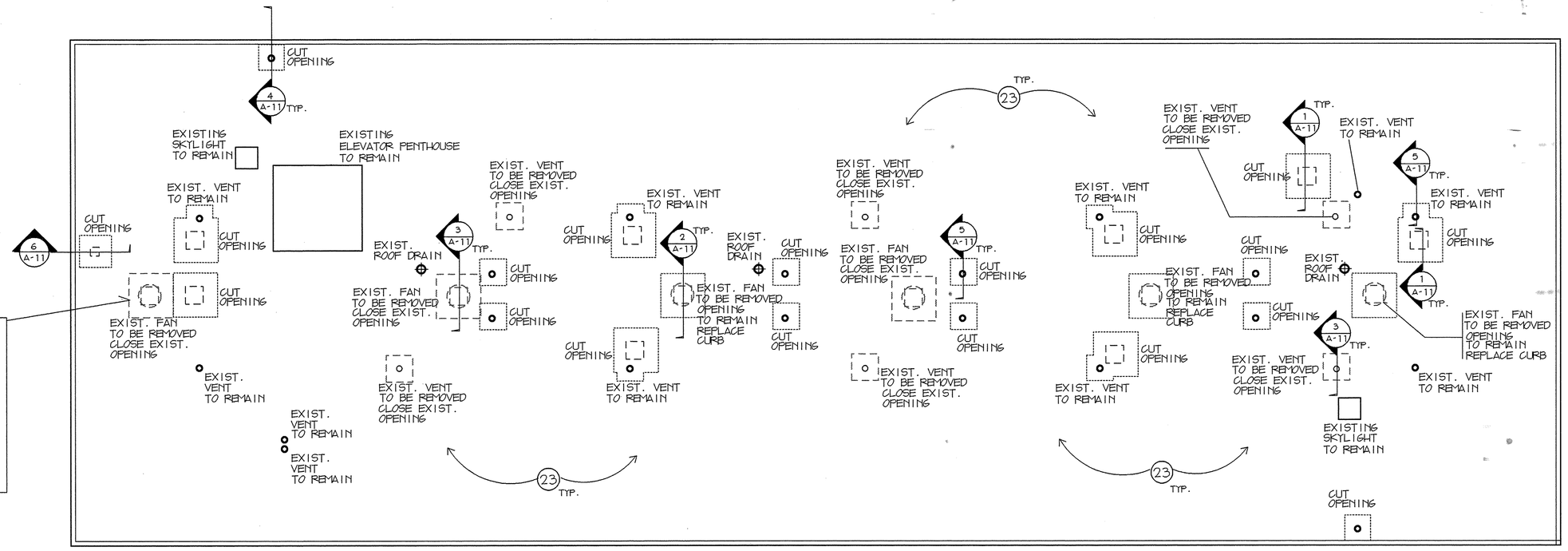

NOTE:
REMOVE ROOFING MATERIAL TO 18" BEYOND EDGE OF OPENING (TYPICAL).
IN CASES WHERE CUTTING BACK ROOFING MATERIAL DISTURBS OTHER EXIST. ROOF PENETRATIONS, THE ROOFING MATERIAL AROUND THE DISTURBED PENETRATION SHALL LIKEWISE BE REMOVED TO 18" AND REINSTALLED ACCORDING TO THE DETAILS ON SHEET A-11.

ROOF DEMOLITION PLAN
SCALE 1/8" = 1'-0"

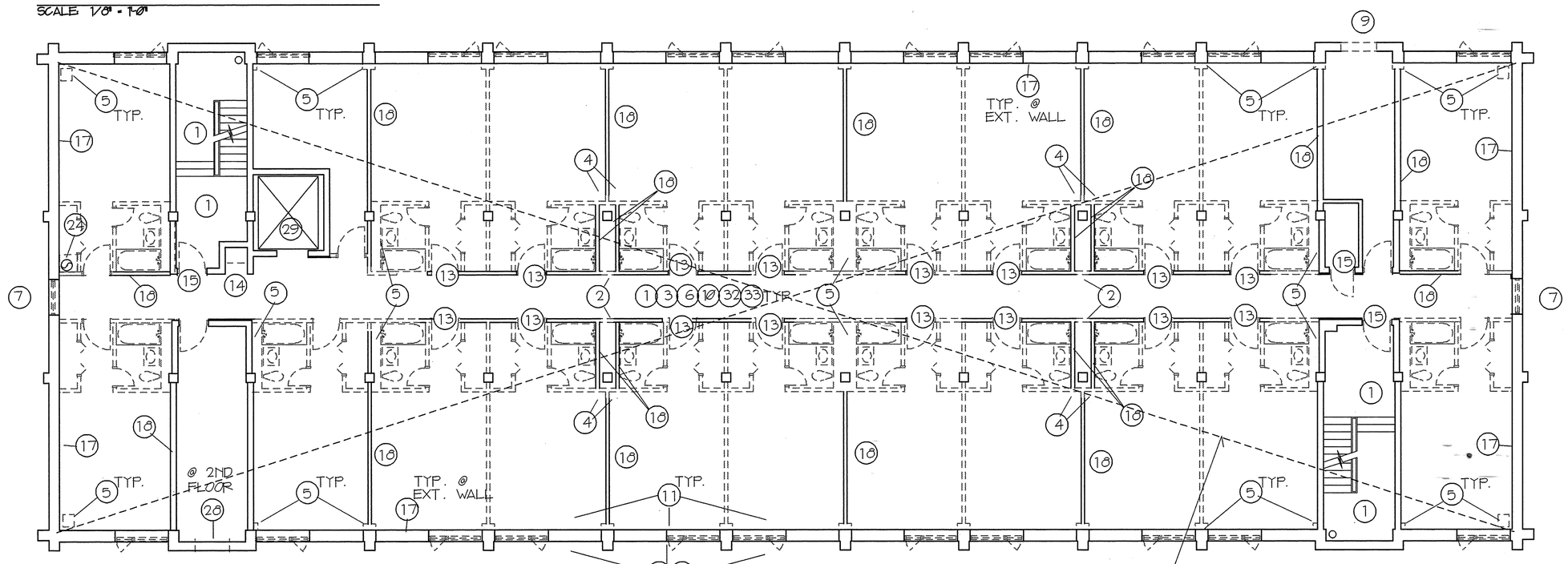

2ND, 3RD, 4TH, 5TH FLOOR DEMOLITION PLAN
SCALE 1/8" = 1'-0"

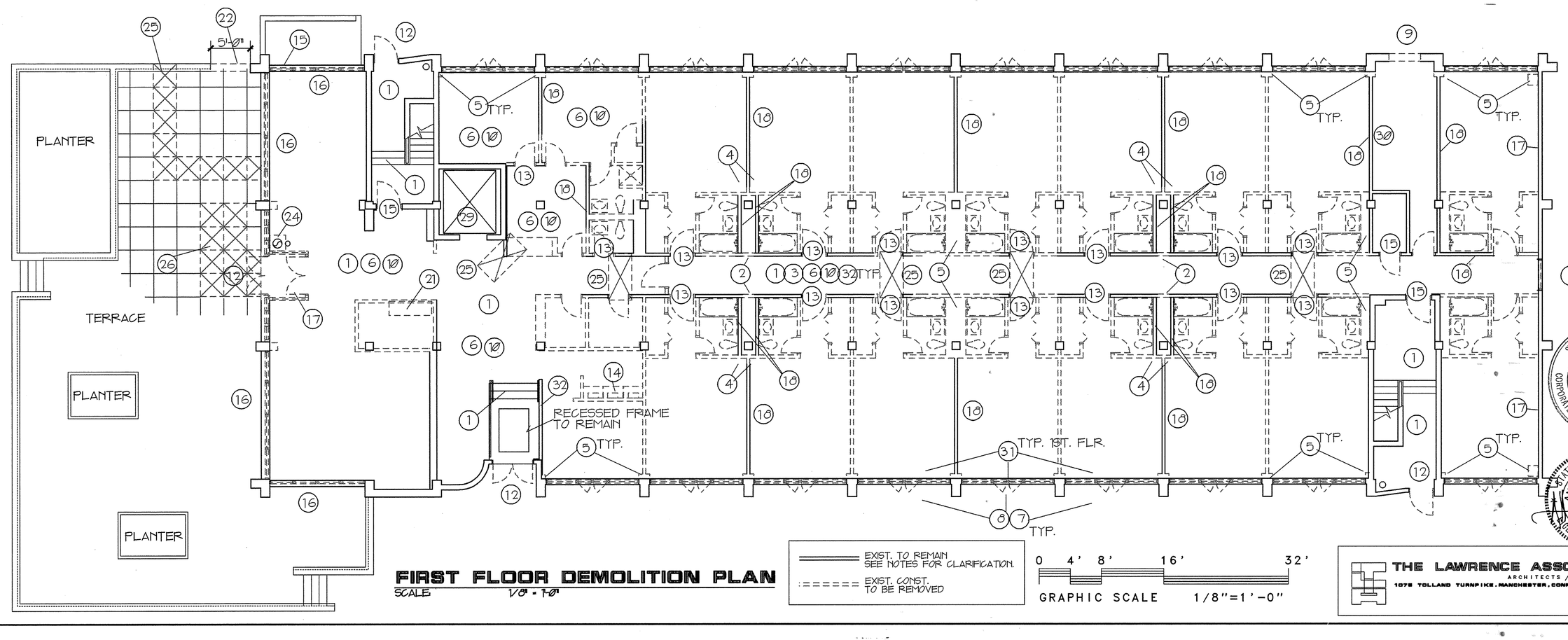

FIRST FLOOR DEMOLITION PLAN
SCALE 1/8" = 1'-0"

EXIST. TO REMAIN SEE NOTES FOR CLARIFICATION.
EXIST. CONST. TO BE REMOVED

0 4' 8' 16' 32'
GRAPHIC SCALE 1/8"=1'-0"

THE LAWRENCE ASSOCIATES
ARCHITECTS / PLANNERS, P.C.
1078 TOLLAND TURNPIKE, MANCHESTER, CONNECTICUT 06040
(203) 643-2181

REVISIONS

SYMBOL	DESCRIPTION	DATE	APPR.

DEMOLITION AND RECONSTRUCTION NOTES:

1. REMOVE EXISTING FLOOR FINISH (V.A.T., CERAMIC TILE, STAIR TREADS & RISERS). MECHANICALLY GRIND HIGH SPOTS. DO NOT REMOVE ABRASIVE NOSING. (FLASH PATCH THE ENTIRE AREA TO OBTAIN A SUBSTRATE THAT WILL BE SUITABLE TO RECEIVE FINISH FLOORING SYSTEM)

2. REMOVE EXISTING ACCESS PANEL. (ENLARGE OPENING. PROVIDE ADDITIONAL FRAMING AS REQUIRED TO INSTALL 1Ø" WIDE BY 4Ø" HIGH FIRE-RATED DOOR. PATCH ANY DISTURBED AREAS TO MATCH SURROUNDING CONSTRUCTION)

3. REMOVE ALL SURFACE MOUNTED ITEMS, INCLUDING ELECTRICAL AND MECHANICAL ITEMS FROM THE CORRIDOR WALLS. SEE MECH/ELEC. PLANS FOR DETAILS. (INSTALL 1/4" GYPSUM BOARD OVER EXISTING WALL WITH ADHESIVE RECOMMENDED BY THE MANUFACTURER. APPLY THREE COATS OF TAPE AND SPACKLE)

4. REMOVE EXISTING GYPSUM BOARD. EXISTING METAL STUDS IN THE CHASE WALLS TO REMAIN. SEE DRAWING A-9 FOR RE-CONSTRUCTION DETAILS.

5. REMOVE EXISTING CHASE WALL. SEE MECHANICAL AND ELECTRICAL DRAWINGS FOR DEMOLITION. FILL ALL FLOOR PENETRATIONS. GRIND HIGH SPOTS AND FLASHPATCH LOW SPOTS TO RECEIVE FLOORING AS DESCRIBED IN NOTE #1 ABOVE.

6. REMOVE EXISTING SUSPENDED CEILING CONSTRUCTION INCLUDING SUSPENSION SYSTEM IN ENTIRE BUILDING. SEE MECHANICAL AND ELECTRICAL DRAWINGS FOR OTHER DEMOLITION.

7. REMOVE ALL EXISTING EXTERIOR WINDOWS AND SPANDREL PANELS. CHECK OPENING FOR PARALLEL AND PERPENDICULAR ALIGNMENT. SHIM OPENINGS IF THERE IS MORE THAN 1/2" OF DEVIATION IN ANY DIRECTION. TAKE FIELD MEASUREMENTS ACCURATELY PRIOR TO SUBMITTING SHOP DRAWINGS FOR WINDOWS.

8. CUT OPENING IN THE EXISTING DRY-VIT FOR NEW LOUVERS IN A MANNER TO OBTAIN SHARP AND CLEAN EDGES. OUTSIDE DIMENSION OF THE OPENING SHALL PROVIDE A MINIMUM OVERLAP OF 1/2" BY THE FLANGE OF PTAC LOUVER HOUSING. CAULK AROUND THE OPENING.

9. SAW CUT NEW OPENING IN EXISTING REINFORCED CONCRETE WALL. REMOVE DEMOLITION MATERIAL WITHOUT CAUSING HAZARD DOWN BELOW. PROVIDE SCAFFOLDING AND PROTECTION. INSTALL WINDOWS AND LOUVERS AS SHOWN.

10. REMOVE EXISTING CARPET AND BASE. REMOVE LEFT OVER CARPET AND/OR CARPET GLUE BY SCRAPPING, OR OTHER MECHANICAL MEANS, DOWN TO THE EXISTING CONCRETE DECK. GRIND HIGH SPOTS AND FLASH PATCH LOW SPOTS. INSTALL CARPET AS DESCRIBED IN NOTE #1 ABOVE.

11. REMOVE EXISTING CONST. FROM FLOOR TO WINDOW SILL. WIDTH OF THE OPENING SHALL BE ADEQUATE TO ACCOMMODATE THE PTAC UNITS. CUT OPENING IN THE EXISTING METAL STUD CONSTRUCTION. REFRAME OPENING AS SHOWN. PROVIDE WOOD BLOCKING ON ALL FOUR SIDES OF THE OPENING. INSTALL PTAC UNITS AS SHOWN.

12. REMOVE EXISTING DOOR, FRAME & THRESHOLD. REPAIR ALL DISTURBED SURFACES TO MATCH EXISTING.

13. EXISTING DOORS AND METAL FRAME TO BE REMOVED. OPENING TO BE FILLED IN WITH GYP. BD. CONSTRUCTION TO MATCH EXISTING WALL.

14. REMOVE EXISTING TELEPHONE COUNTER.

15. REMOVE EXISTING DOOR AND BUTTS. EXISTING METAL FRAME IS TO REMAIN. PREPARE FRAME TO RECEIVE NEW DOOR AND HARDWARE.

16. REMOVE EXISTING WINDOW WALL CONSTRUCTION. CHECK OPENING FOR PARALLEL AND PERPENDICULAR ALIGNMENT. SHIM OPENING IF THERE IS MORE THAN 1/2" DEVIATION IN ANY DIRECTION. INFILL OPENING WITH WINDOW & WALL CONSTRUCTION.

17. ADD NEW 1/2" LAYER GYP. BD. ON 7/8" FURRING CHANNEL ON TOP OF EXISTING.

18. REMOVE EXISTING GYP. BD. (REFER TO WALL TYPE SCHEDULE FOR EXTENT OF REMOVAL OF WALL). EXIST. WALL STUDS TO REMAIN. SEE WALL TYPE SCHEDULE FOR RECONSTRUCTION.

19. REMOVE EXISTING CURTAINS, AND CURTAIN TRACK.

20. SEE MECHANICAL & ELECTRICAL DRAWINGS FOR RELATED DEMOLITION.

21. REMOVE MAIL BOXES.

22. SAW CUT AND REMOVE EXISTING CONCRETE WALL & CAP FOR NEW RAMP.

23. REMOVE ALL EXISTING ROOF CURBS. SEE MECH. & ELEC. DRAWINGS FOR ADDITIONAL REMOVAL AND FOR LOCATIONS OF CORE DRILLING AND OTHER OPENINGS THROUGH THE EXISTING CONCRETE ROOF/ FLOOR DECKS. COORDINATE PRECISE SIZE AND LOCATION OF ROOF OPENINGS IN FIELD. WHERE NOTED, CLOSE THE ROOF OPENING AND RE-ROOF. OTHERWISE INSTALL CURBS.

24. CUT HOLE IN CONCRETE FLOOR. SEE MECHANICAL DRAWINGS FOR SIZE.

25. SAW CUT AND REMOVE CONCRETE. SEE MECHANICAL DRAWINGS FOR EXTENT. POUR 4" CONC. SLAB ON 6" OF COMPACTED GRAVEL.

26. SAW CUT AND REMOVE CONC. PAVEMENT AS REQUIRED FOR HANDICAPPED RAMP

28. REMOVE EXISTING LOUVER. PREPARE FOR INSTALLATION OF LOUVER.

29. SEE SPECIFICATIONS FOR EXTENT OF ELEVATOR DEMOLITION AND RECONSTRUCTION.

31. CUT OPENING IN THE EXISTING METAL STUD CONSTRUCTION. REFRAME OPENING AS SHOWN. PROVIDE WOOD BLOCKING ON ALL FOUR SIDES OF THE OPENING. INSTALL PTAC UNITS AS SHOWN (2) PER RESIDENTIAL UNIT.

32. REMOVE GYP. BD. FROM ROOM SIDE OF ALL EXIST. WALLS IN CORRIDOR. STUDS AND GYP. BD. ON CORRIDOR SIDE TO REMAIN. ADD SOUND ATTENUATION BLANKET AND NEW GYP. BD. AS NOTED ON WALL TYPE SCHEDULE.

33. REMOVE EXIST. SUSPENDED ACOUSTICAL CEILING ON FIFTH FLOOR.

STATE OF CONNECTICUT — THE LAWRENCE ASSOCIATES — ARCHITECTS / PLANNERS, P.C. — CERTIFICATE OF CORPORATE PRACTICE OF ARCHITECTURE — NO. 79

STATE OF CONNECTICUT — ANWAR HOSSAIN — LICENSED ARCHITECT — NO. 6909

NETC DWG NO. 30745-304 NETC SK NO.	DEPARTMENT OF THE NAVY — NAVAL FACILITIES ENGINEERING COMMAND NAVAL EDUCATION AND TRAINING CENTER NEWPORT, RHODE ISLAND
DES. AH	REPAIRS AND ALTERATIONS TO:
DR. RBF	BUILDING #678
BR. [illegible] 12/5/94 DIR.	
APPROVED [illegible] PE 12/5/94 DATE	DWG TITLE DEMOLITION FLOOR PLANS DEMOLITION/ RECONSTRUCTION NOTES
SATISFACTORY TO [illegible]	SIZE F — CODE IDENT NO. 80091 — NAVFAC DRAWING NO. 2171430
DATE 11-22-94	CONSTR. CONTR. NO. N62472-93-C-1996
SCALE AS SHOWN	SPEC. 93-C-1996 — SHEET A-2 — 4 OF 44

REVISIONS			
SYMBOL	DESCRIPTION	DATE	APPR.

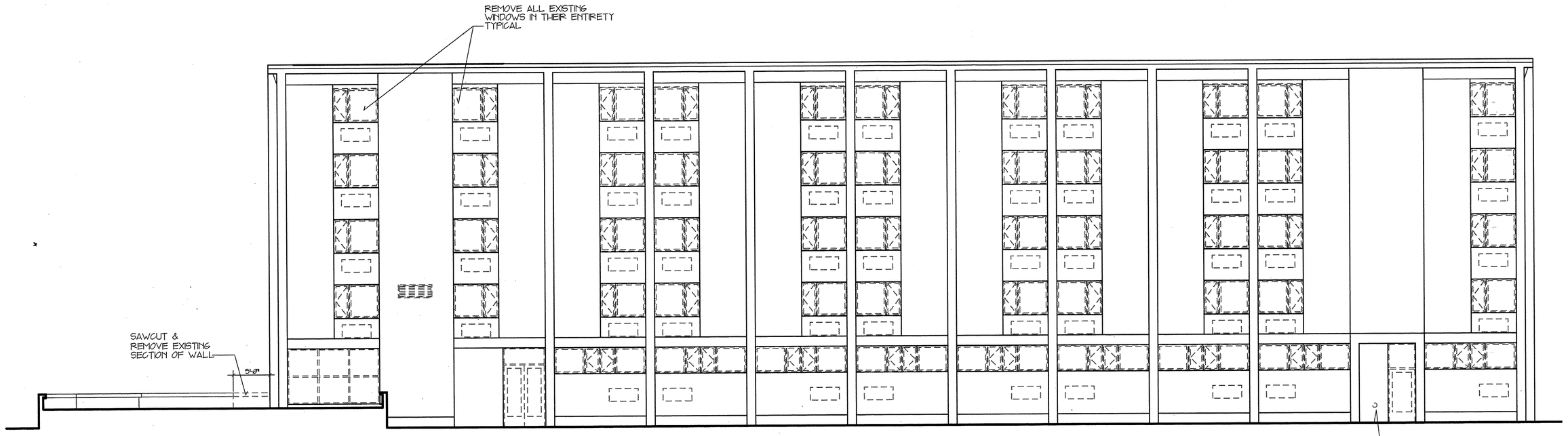

WEST EXTERIOR DEMOLITION ELEVATION

SCALE: 1/8" = 1'-0"

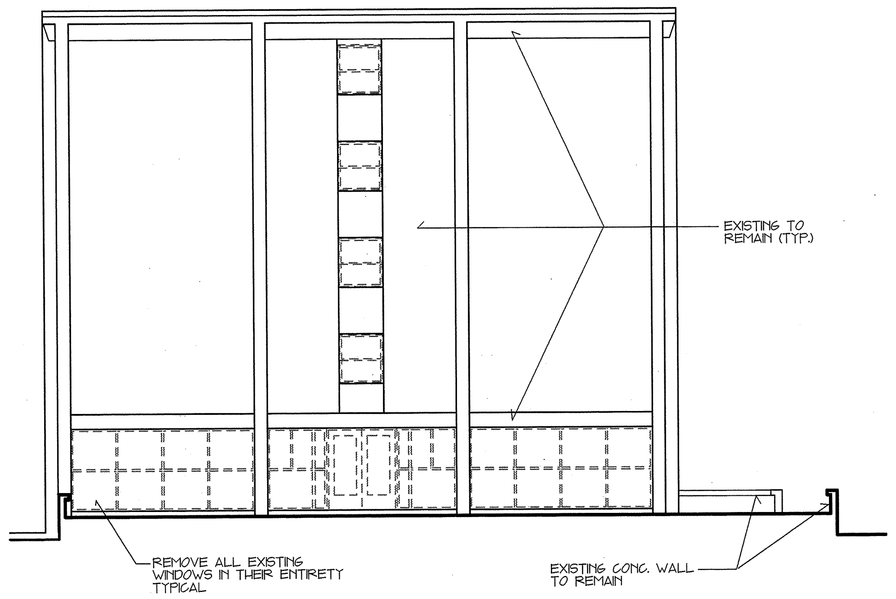

NORTH EXTERIOR DEMOLITION ELEVATION

SCALE: 1/8" = 1'-0"

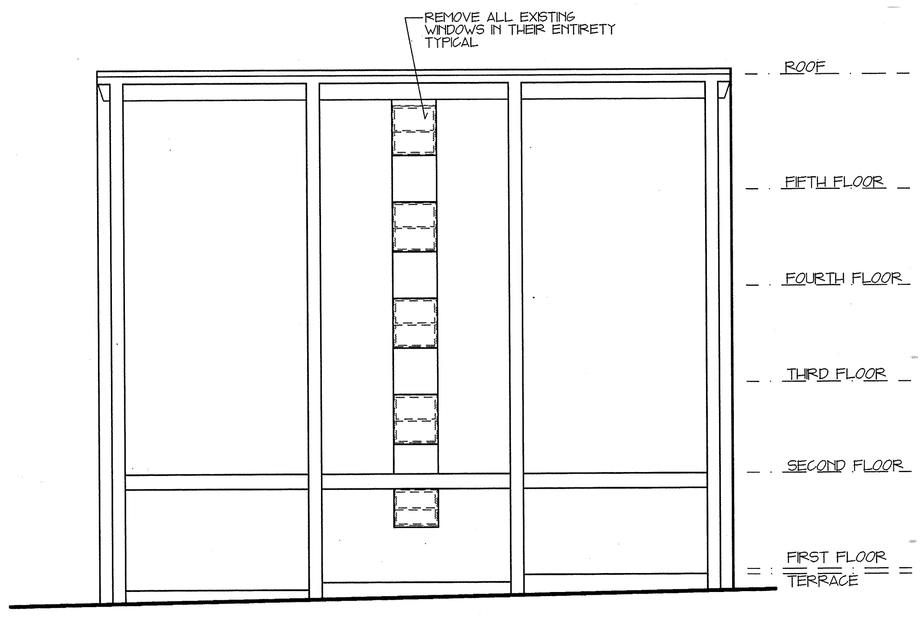

SOUTH EXTERIOR DEMOLITION ELEVATION

SCALE: 1/8" = 1'-0"

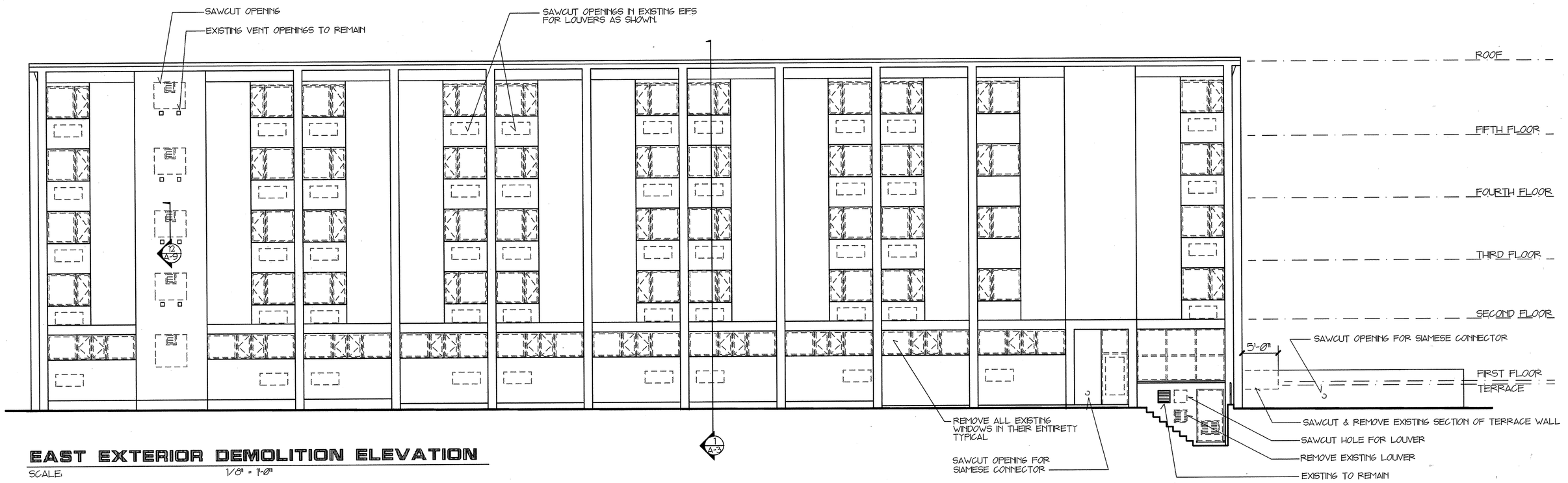

EAST EXTERIOR DEMOLITION ELEVATION

SCALE: 1/8" = 1'-0"

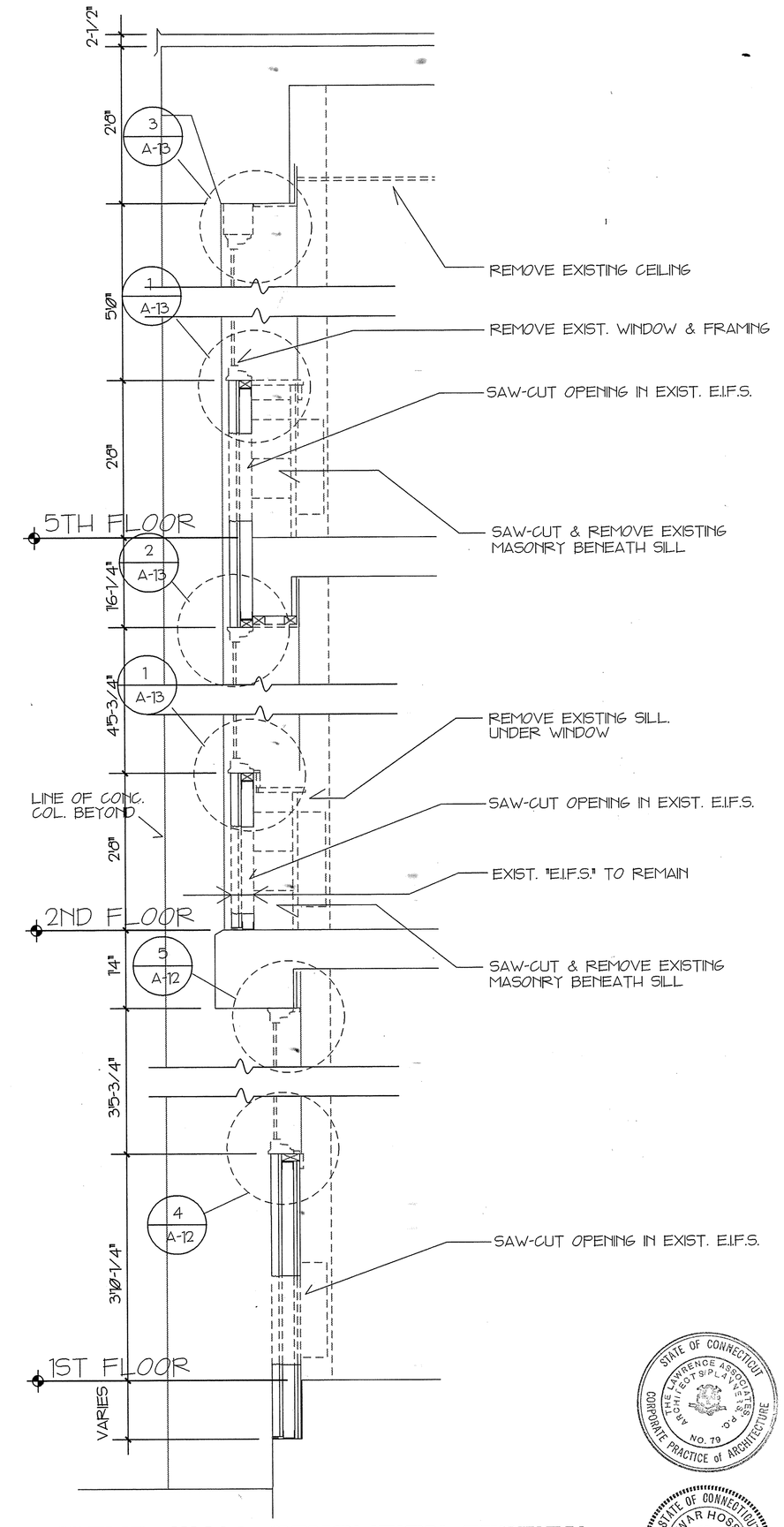

1 A-3 TYP. WALL DEMOLITION SECTION

SCALE: 3/4" = 1'-0"

0 6" 1' 2' 4' GRAPHIC SCALE 3/4"=1'

0 4' 8' 16' 32' GRAPHIC SCALE 1/8"=1'-0"

THE LAWRENCE ASSOCIATES
ARCHITECTS / PLANNERS, P.C.
1075 TOLLAND TURNPIKE, MANCHESTER, CONNECTICUT 06040
(203) 643-2161

NETC DWG NO. / NETC SK NO.	30746-304
DES.	AH
DR.	RBF
BR.	J. Galeshaw, KA 12/5/94
DIR.	
APPROVED	K. Nelson PE 12/12/94
SATISFACTORY TO	Noel E. Martin
DATE	11-22-94

DEPARTMENT OF THE NAVY — NAVAL FACILITIES ENGINEERING COMMAND
NAVAL EDUCATION AND TRAINING CENTER
NEWPORT, RHODE ISLAND

REPAIRS AND ALTERATIONS TO:
BUILDING #678

DWG TITLE: EXTERIOR ELEVATION DEMOLITION WALL SECTION DEMOLITION

SIZE	CODE IDENT NO.	NAVFAC DRAWING NO.
F	80091	2171431
		CONSTR. CONTR. NO. N62472-93-C-1996
SCALE AS SHOWN		SPEC. 93-C-1996 — SHEET A-3 5 OF 44

STATE OF CONNECTICUT — THE LAWRENCE ASSOCIATES ARCHITECTS/PLANNERS, P.C. — NO. 79 — CORPORATE PRACTICE of ARCHITECTURE

STATE OF CONNECTICUT — ANWAR HOSSAIN — NO. 6399 — LICENSED ARCHITECT

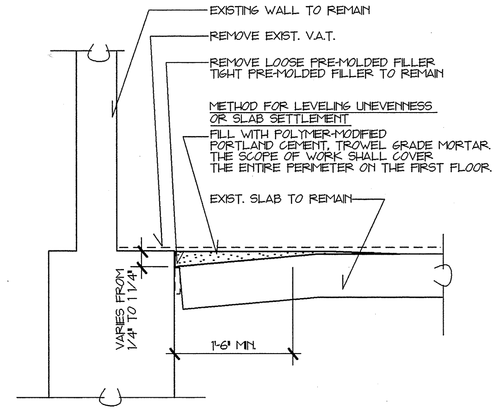

1 A-4 **DETAIL OF SLAB REPAIR**
SCALE: N.T.S.

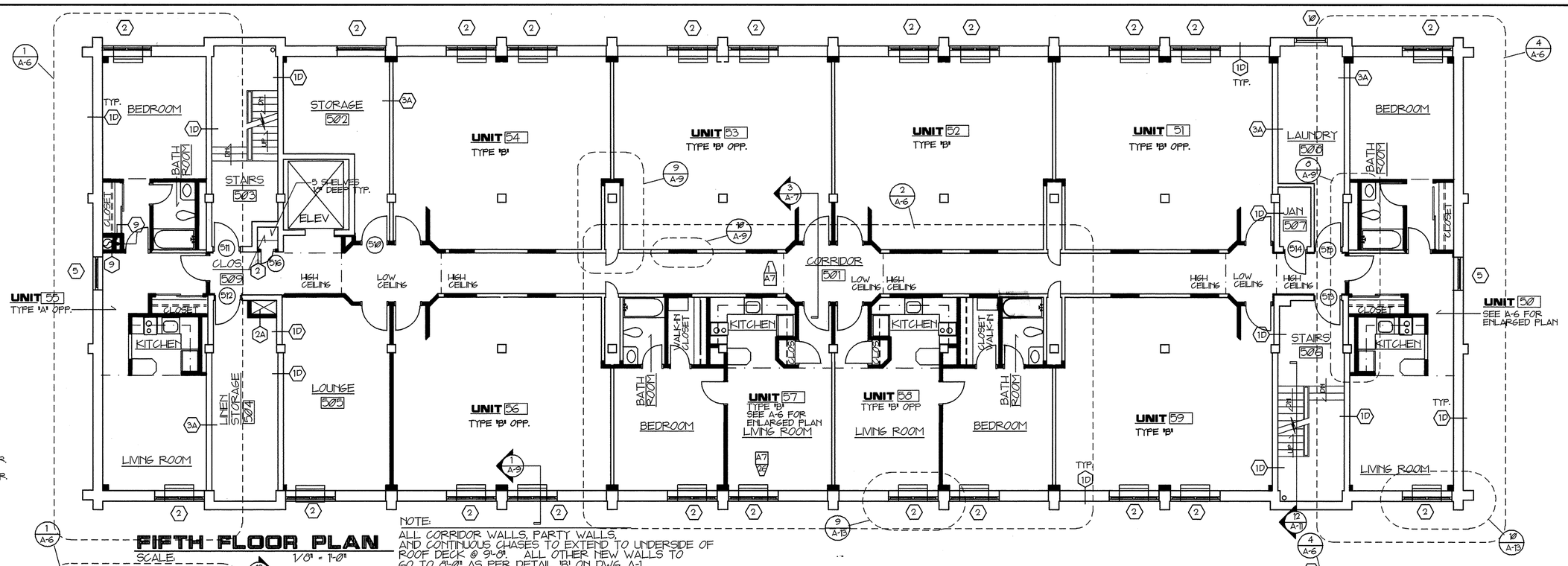

FIFTH FLOOR PLAN
SCALE: 1/8" = 1'-0"

NOTE:
ALL CORRIDOR WALLS, PARTY WALLS, AND CONTINUOUS CHASES TO EXTEND TO UNDERSIDE OF ROOF DECK @ 9'-0". ALL OTHER NEW WALLS TO GO TO 8'-0" AS PER DETAIL 'B' ON DWG. A-1.

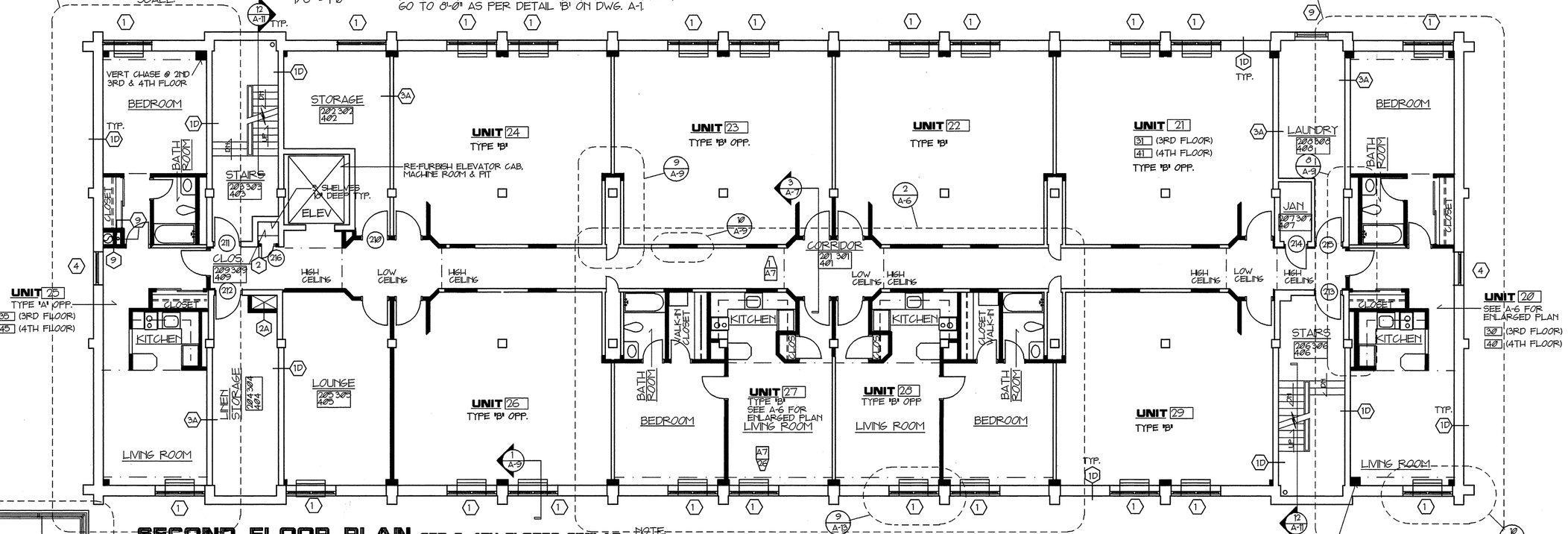

SECOND FLOOR PLAN 3RD & 4TH FLOORS SIMILAR
SCALE: 1/8" = 1'-0"

NOTE:
ALL NEW WALLS SHALL EXTEND TO UNDERSIDE OF DECK AS PER DETAIL 'A' ON DWG. A-1

NOTES:

1. TOPSOIL, REGRADE AND SEED ALL AREAS DISTURBED BY CONSTRUCTION.
2. PROTECT EXISTING STORM PIPE DURING EXCAVATION AND POURING OF FOOTING.

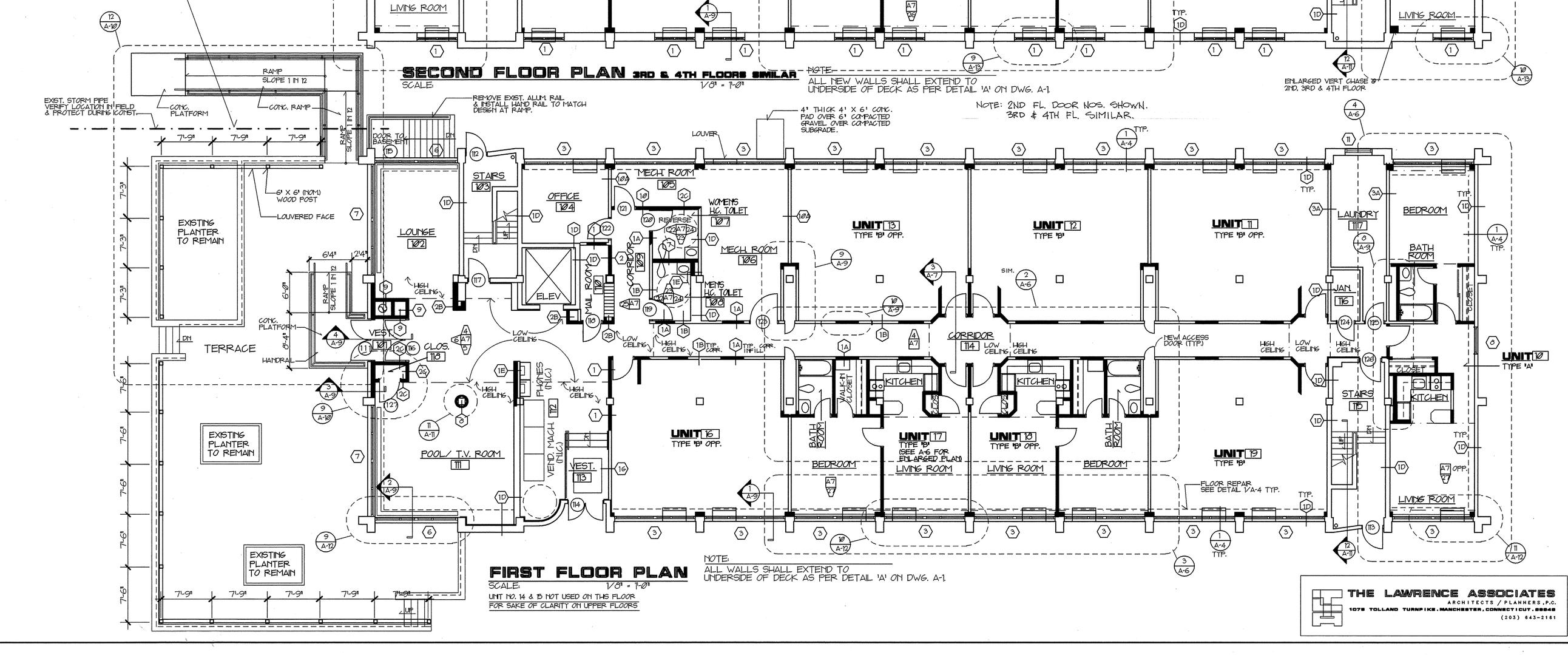

FIRST FLOOR PLAN
SCALE: 1/8" = 1'-0"
UNIT NO. 14 & 15 NOT USED ON THIS FLOOR FOR SAKE OF CLARITY ON UPPER FLOORS

NOTE:
ALL WALLS SHALL EXTEND TO UNDERSIDE OF DECK AS PER DETAIL 'A' ON DWG. A-1

NOTE: 2ND FL. DOOR NOS. SHOWN. 3RD & 4TH FL. SIMILAR.

REVISIONS

SYMBOL	DESCRIPTION	DATE	APPR.

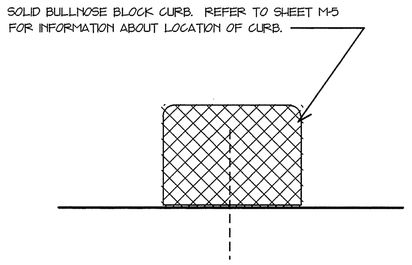

BASEMENT CURB DETAIL
SCALE: N.T.S.

ROOM FINISH SCHEDULE

	NO.	ROOM NAME	FLOOR: HARDWOOD CONCRETE	FLOOR: VINYL COMP. TILE	FLOOR: CERAMIC TILE	FLOOR: QUARRY TILE	FLOOR: SHEET VINYL	FLOOR: RUBBER TREADS	FLOOR: RUBBER RISERS	FLOOR: RUBBER MAT	BASE: VINYL	BASE: CERAMIC TILE	BASE: WOOD	BASE: CARPET	WALLS: FIBERGLASS EPOXY	WALLS: STORAGE	WALLS: CERAMIC TILE	WALLS: PAINT	WALLS: VINYL WALL COVERING	CEILING: ACOUSTICAL CEILING TILE	CEILING: GYP. BOARD OR M.R. GYPSUM BOARD	CEILING: PAINT	CEILING: TEXTURE FINISH	RATING (IN MIN.)	REMARKS
TYPICAL ALL FLOORS	01	LIVING ROOM			•									•							•		•		
	02	CLOSET			•									•						•	•				
	03	KITCHEN					•				•									•	•				1
	04	BEDROOM			•									•						•	•		•		
	05	WALK-IN CLOSET			•									•						•					
	06	BATHROOM		•								•						•	•	•					2
	07	ENTRY HALLWAY			•									•						•	•				
FIRST FLOOR	101	VESTIBULE		•	•							•							•	•					
	102	LOUNGE			•									•						•	•	•				
	103	STAIR	•					•	•		•								•				•		*
	104	OFFICE				•								•					•			•	•		
	105	MECH. ROOM	•									•							•				•		
	106	MECH. ROOM	•									•							•				•		
	107	H.C. TOILET		•									•						•		•				2
	108	H.C. TOILET		•									•						•		•				2
	109	CORRIDOR				•								•					•	•	•	•	•		
	110	MAIL ROOM	•									•							•		•				
	111	POOL/ T.V. ROOM			•									•					•	•	•	•	•		
	112	VENDING MACHINES			•									•					•		•				
	113	VESTIBULE	•						•	•									•	•	•	•	•		
	114	CORRIDOR				•								•					•	•	•	•	•		
	115	STAIRS	•									•							•				•		
	116	JANITOR	EXISTING TO REMAIN																						
	117	LAUNDRY	•									•							•				•		
	118	CLOSET			•									•					•		•				
2ND TO 5TH FLOORS	201 301 401	CORRIDOR			•									•					•	•	•	•	•		
	202 302 402	STORAGE	•									•							•		•				
	203 303 403	STAIRS	•									•							•						*
	204 304 404	LINEN STORAGE	•									•							•		•				
	205 305 405	LOUNGE			•									•					•	•					
	206 306 406	STAIRS	•									•							•				•		*
	207 307 407	JANITOR	EXISTING TO REMAIN																						
	208 308 408	LAUNDRY	•									•							•				•		
	209 309 409	CLOSET			•									•					•		•				

* PAINT TREADS, RISERS, STRINGERS, AND HANDRAILS. DO NOT PAINT OVER ABRASIVE NOSING. V.C.T. IS AT STAIR LANDINGS ONLY.

1. COLOR OF VINYL FLOOR IN KITCHEN TO BE SELECTED BY ARCHITECT. ONLY ONE COLOR TO BE USED.
2. COLOR OF CERAMIC TILE IN BATHROOM TO BE SELECTED BY ARCHITECT. ONLY ONE COLOR TO BE USED.

NORTH

STATE OF CONNECTICUT — THE LAWRENCE ASSOCIATES ARCHITECTS PLANNERS P.C. — CORPORATE PRACTICE OF ARCHITECTURE — NO. 79

STATE OF CONNECTICUT — ANWAR HOSAIN — NO. 6999 — LICENSED ARCHITECT

KEY:
NEW WALL
EXISTING WALL

0 4' 8' 16 32'
GRAPHIC SCALE 1/8"=1'

NETC DWG NO. / NETC SK NO.	30747-304
DES.	AH
DR.	RBF
BR.	12/7/94
DIR.	
APPROVED / DATE	12/8/94
SATISFACTORY TO	
DATE	11-22-94

DEPARTMENT OF THE NAVY — NAVAL FACILITIES ENGINEERING COMMAND
NAVAL EDUCATION AND TRAINING CENTER
NEWPORT, RHODE ISLAND

REPAIRS AND ALTERATIONS TO:
BUILDING #678

DWG TITLE: FLOOR PLANS / ROOM FINISH SCHEDULE

SIZE	CODE IDENT NO.	NAVFAC DRAWING NO.
F	80091	2171432
		CONSTR. CONTR. NO. N62472-93-C-1996
SCALE AS SHOWN		SPEC. 93-C-1996 SHEET A-4 6 of 44

THE LAWRENCE ASSOCIATES
ARCHITECTS / PLANNERS, P.C.
1075 TOLLAND TURNPIKE, MANCHESTER, CONNECTICUT 06040
(203) 643-2161

REVISIONS			
SYMBOL	DESCRIPTION	DATE	APPR.

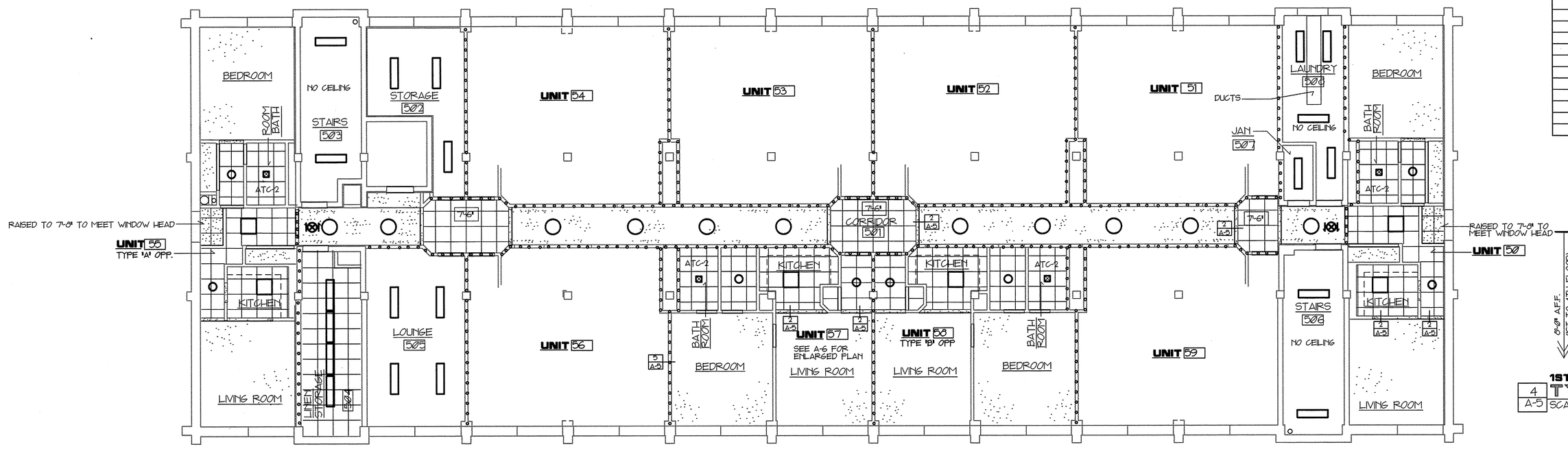

5TH FLOOR REFLECTED CEILING PLAN

SCALE 1/8" = 1'-0"

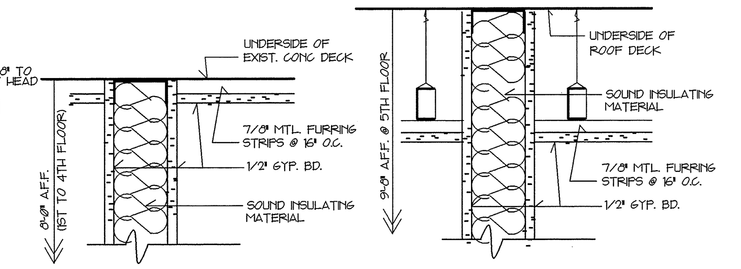

1ST TO 4TH FLOOR
4 / A-5 **TYP. CEILING DTL.** SCALE N.T.S.

5TH FLOOR
5 / A-5 **TYP. CEILING DTL.** SCALE N.T.S.

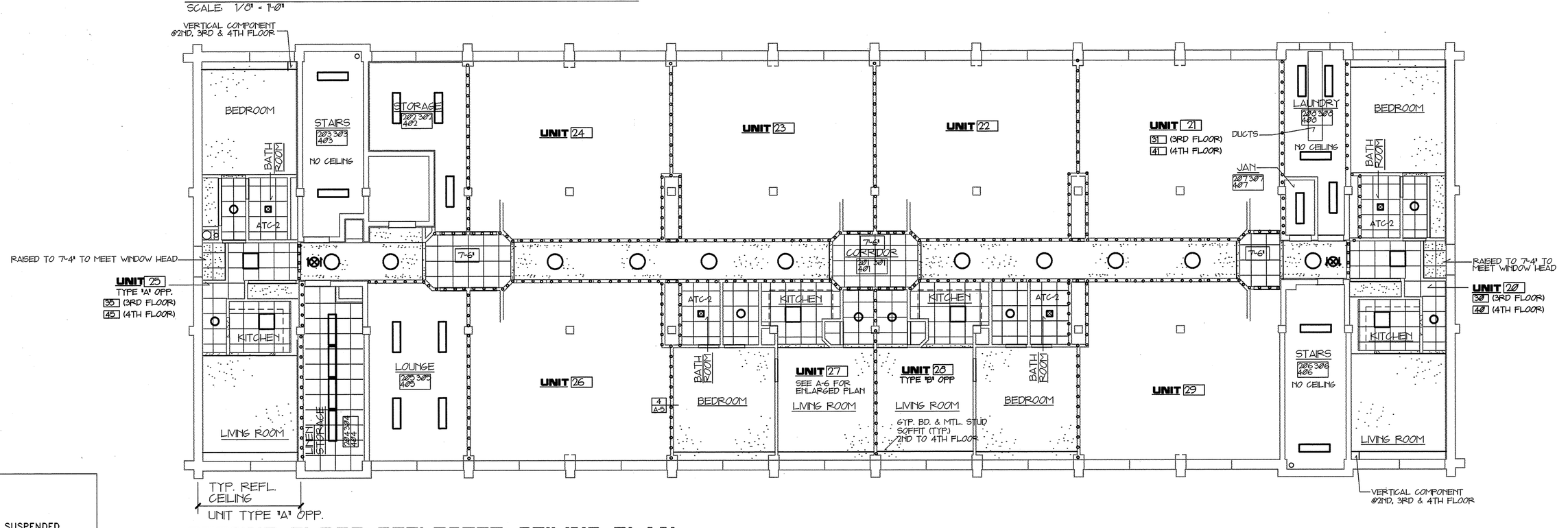

SECOND FLOOR REFLECTED CEILING PLAN 3RD & 4TH FLOOR SIMILAR

SCALE 1/8" = 1'-0"

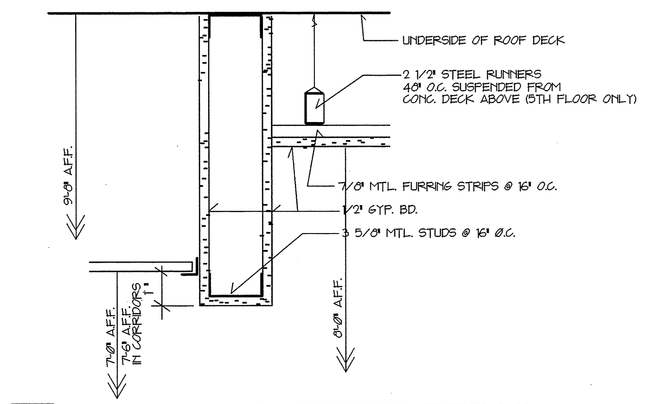

2 / A-5 **TYP. CEILING SOFFIT DETAIL** 5TH FLOOR SCALE N.T.S.

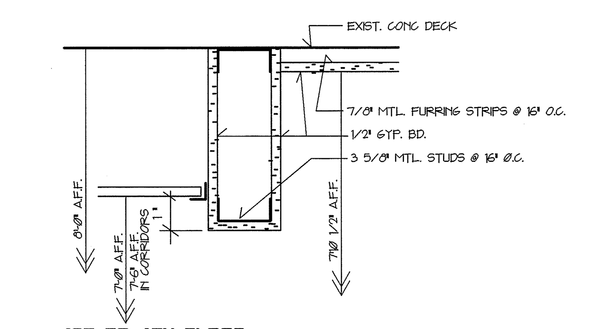

1ST TO 4TH FLOOR
1 / A-5 **TYP. CEILING SOFFIT DETAIL** SCALE N.T.S.

NOTES:

1. UNLESS NOTED OTHERWISE ALL 2X2 SUSPENDED CEILINGS ARE TO BE TYPE " ATC-1".
2. EXCEPT AS NOTED, ALL CEILING HEIGHTS ARE:

1ST TO 4TH FLOOR:
2X2 SUSPENDED CEILINGS: 7'0"
GYPSUM BOARD CEILINGS: 7'10 1/2"

5TH FLOOR
2X2 SUSPENDED CEILINGS: 7'0"
GYPSUM BOARD CEILINGS: 8'0"

LEGEND:

- 2 X 4 SURFACE MOUNTED LIGHTS
- 1 X 4 SURFACE MOUNTED LIGHTS
- 2 X 2 SURFACE MOUNTED LIGHTS
- LARGE ROUND SURFACE MOUNTED LIGHTS
- SMALL ROUND SURFACE MOUNTED LIGHTS
- SMALL SQUARE SURFACE MOUNTED LIGHTS
- SMALL AIR DIFFUSER
- CEILING MOUNTED LIGHTED EMERGENCY EXIT SIGN
- WALLS W/ SOUND ATTENUATION. SEE DRAWING A-1 FOR DETAILS.

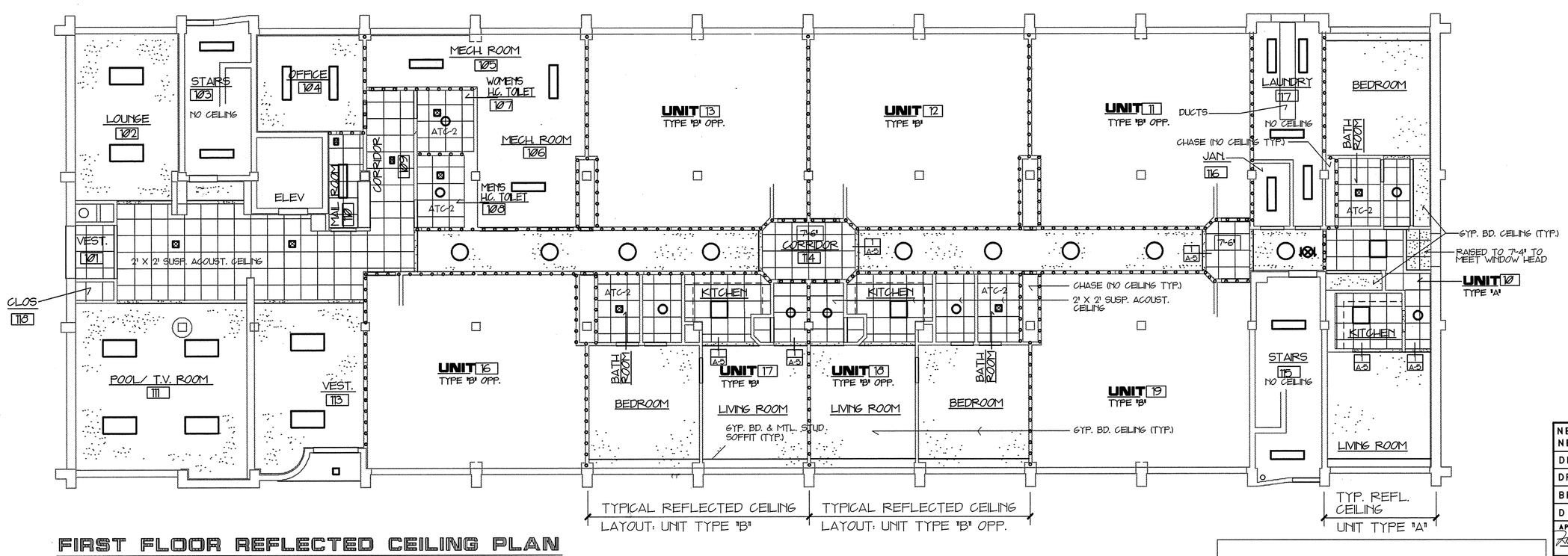

FIRST FLOOR REFLECTED CEILING PLAN

SCALE 1/8" = 1'-0"

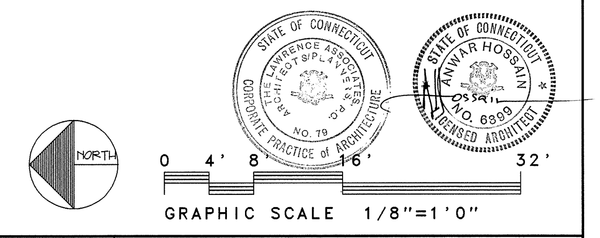

NETC DWG NO. 30748-304 NETC SK NO.	DEPARTMENT OF THE NAVY — NAVAL FACILITIES ENGINEERING COMMAND NAVAL EDUCATION AND TRAINING CENTER NEWPORT, RHODE ISLAND	
DES. AH	REPAIRS AND ALTERATIONS TO: BUILDING #678	
DR. RBF		
BR.		
DIR.		
APPROVED / DATE	DWG TITLE: REFLECTED CEILING PLANS CEILING DETAILS	
SATISFACTORY TO / DATE 11-22-91	SIZE F / CODE IDENT NO. 80091	NAVFAC DRAWING NO. 2171433
	CONSTR. CONTR. NO. N62472-93-C-1996	
	SCALE AS SHOWN / SPEC. 93-C-1998	SHEET A-5 7 OF 44

THE LAWRENCE ASSOCIATES
ARCHITECTS / PLANNERS, P.C.
1075 TOLLAND TURNPIKE, MANCHESTER, CONNECTICUT 06040
(203) 643-2161

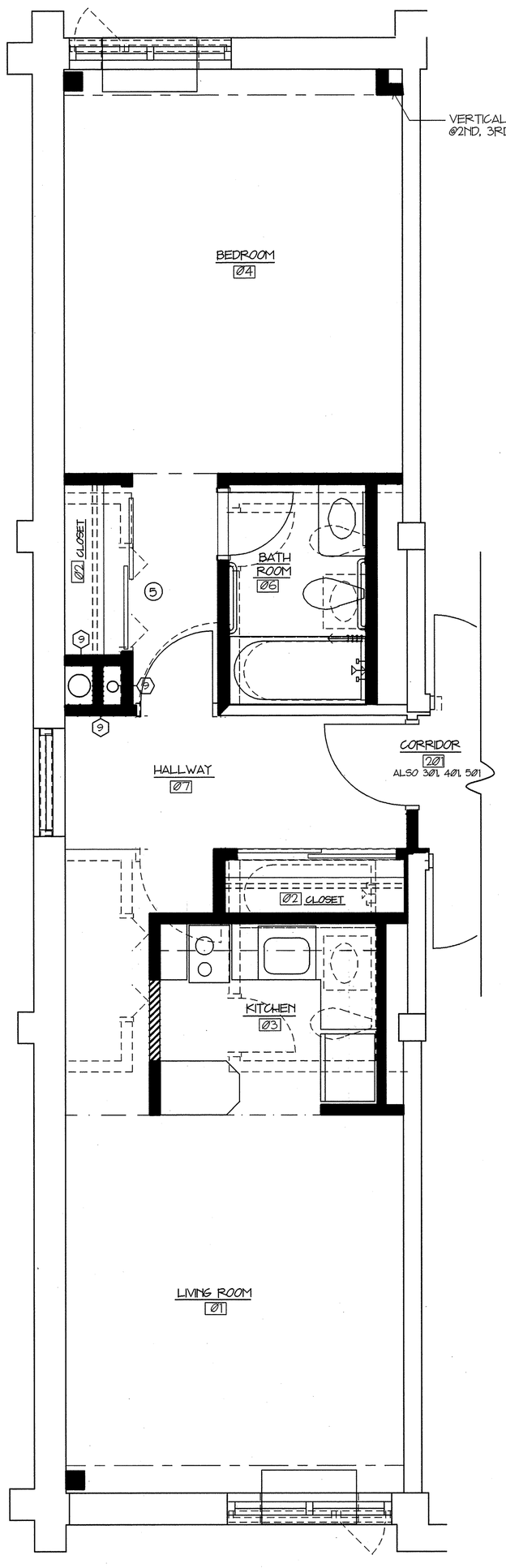

1 A-6 **FLOOR PLAN UNIT TYPE 'A' OPP. 2ND TO 5TH FLR. (1ST SIM.)**
SCALE 3/8" = 1'-0"

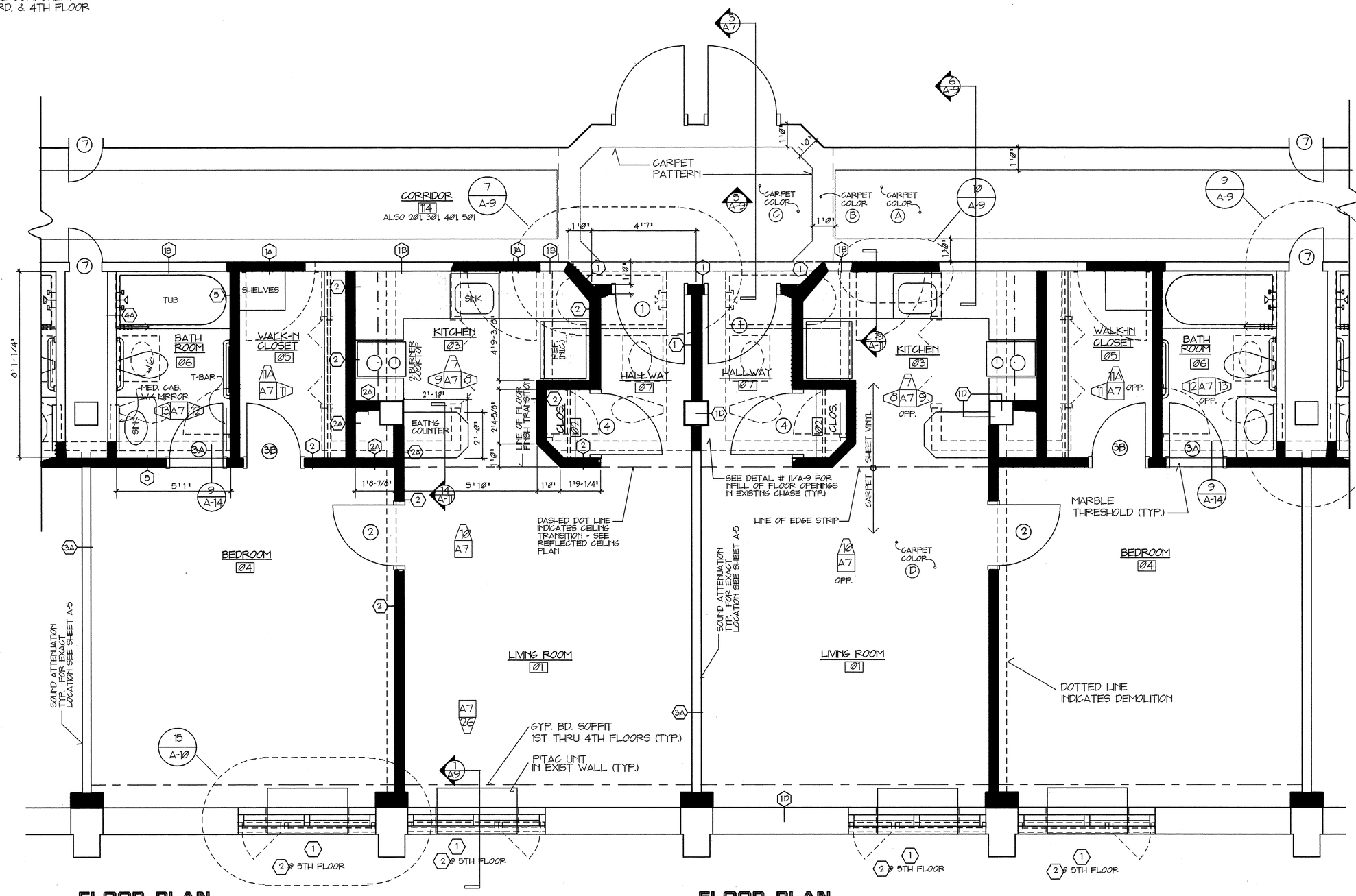

2 A-6 **FLOOR PLAN UNIT TYPE "B" @ 2ND TO 5TH FLOORS**
SCALE 3/8" = 1'-0"

FLOOR PLAN UNIT TYPE "B" OPPOSITE: 2ND THRU 5TH FLOORS

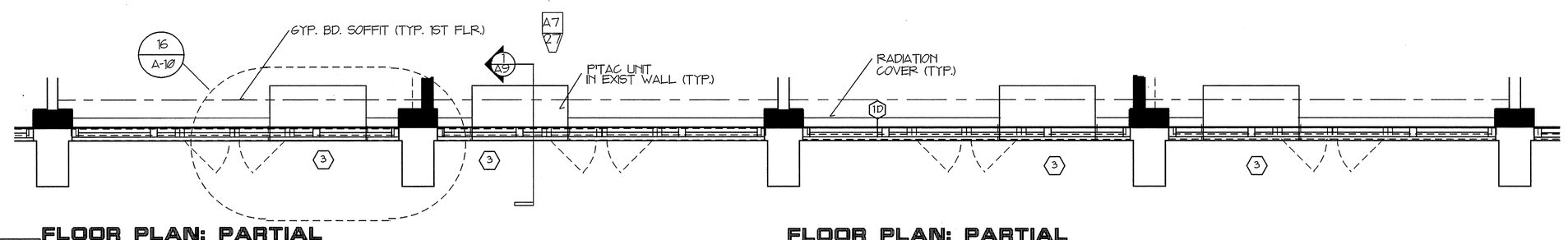

3 A-6 **FLOOR PLAN: PARTIAL UNIT TYPE "B" @ 1ST FLOOR**
SCALE 3/8" = 1'-0"

FLOOR PLAN: PARTIAL UNIT TYPE "B" OPPOSITE: 1ST FLOOR

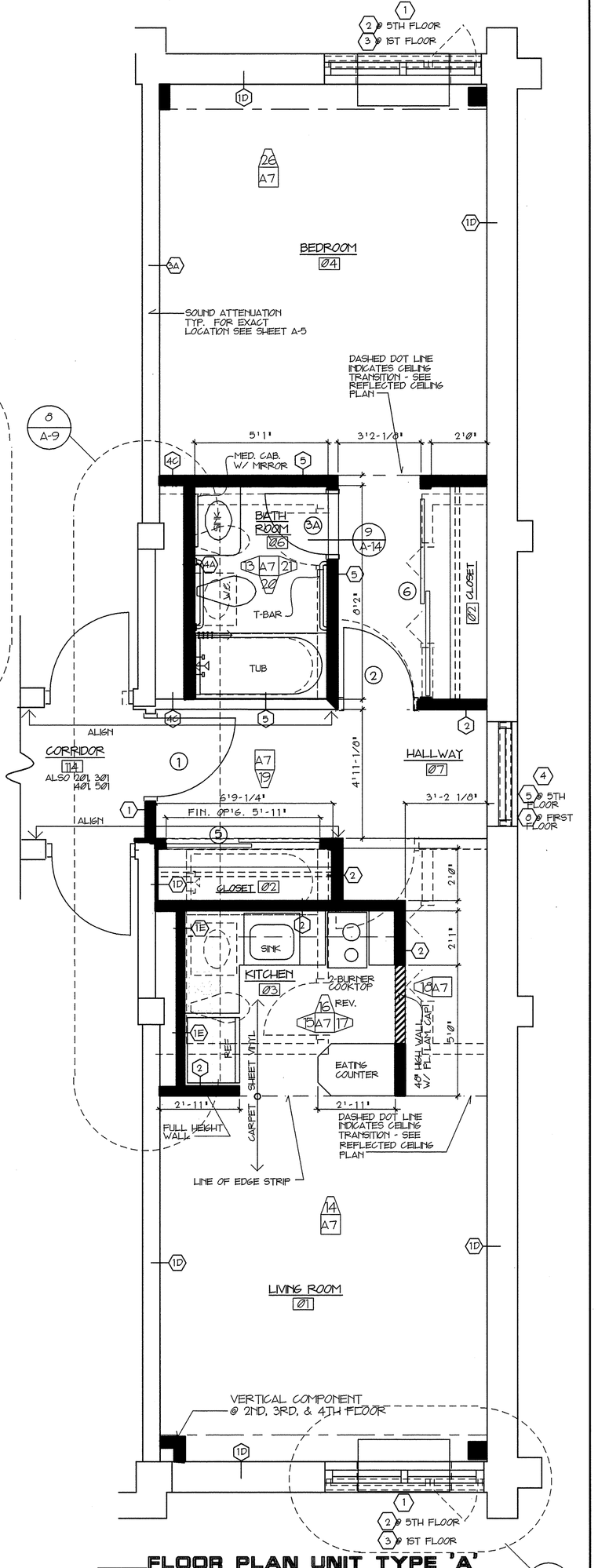

4 A-6 **FLOOR PLAN UNIT TYPE 'A' 2ND TO 5TH FLR. (1ST SIM.)**
SCALE 3/8" = 1'-0"
11/A-12 @ 1ST FLR.

KEY:

- EXISTING WALL TO REMAIN
- DEMOLITION
- NEW WALL
- NEW HALF-HEIGHT WALL

NOTE:
ALL DIMENSIONS ARE FACE TO FACE OF GYP. BD. FOR EXISTING & NEW WALLS.

REVISIONS

SYMBOL	DESCRIPTION	DATE	APPR.

STATE OF CONNECTICUT — LAWRENCE ASSOCIATES ARCHITECTS / PLANNERS, P.C. — CORPORATE PRACTICE OF ARCHITECTURE NO. 79

STATE OF CONNECTICUT — ANWAR HOSSAIN — NO. 6399 — LICENSED ARCHITECT

NORTH — 0 1' 2' 4' 8' — GRAPHIC SCALE 3/8"=1'

THE LAWRENCE ASSOCIATES
ARCHITECTS / PLANNERS, P.C.
1078 TOLLAND TURNPIKE, MANCHESTER, CONNECTICUT 06040
(203) 643-2151

NETC DWG NO. 30749-304	DEPARTMENT OF THE NAVY — NAVAL FACILITIES ENGINEERING COMMAND
NETC SK NO.	NAVAL EDUCATION AND TRAINING CENTER, NEWPORT, RHODE ISLAND
DES. AH	REPAIRS AND ALTERATIONS TO: BUILDING #678
DR. RBF	
BR.	
DIR.	
APPROVED H.C. Selkow PE 12/12/96 DATE	DWG TITLE: ENLARGED PLANS
SATISFACTORY TO Noel E. Martin DATE 11-22-96	SIZE F; CODE IDENT NO. 80091; NAVFAC DRAWING NO. 2171434; CONSTR. CONTR. NO. N62472-93-C-1996
SCALE AS SHOWN	SPEC. 93-C-1996; SHEET A-6 8 OF 44

REVISIONS			
SYMBOL	DESCRIPTION	DATE	APPR.

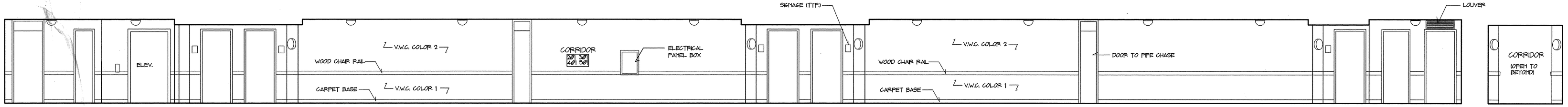

CORRIDOR ELEVATION
2ND TO 5TH FLOOR

TYP. CORRIDOR SECTION
AT APT. ENTRIES

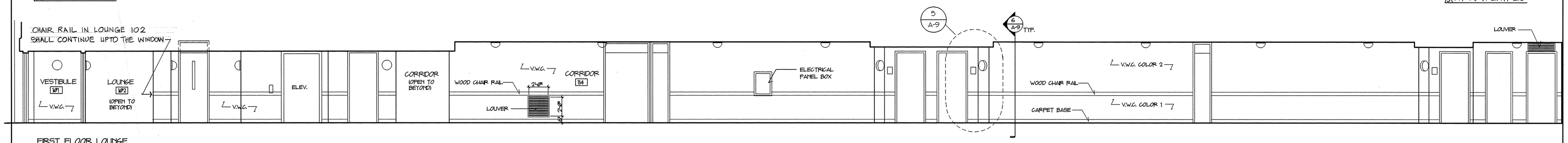

FIRST FLOOR LOUNGE
T.V. ROOM & CORRIDOR

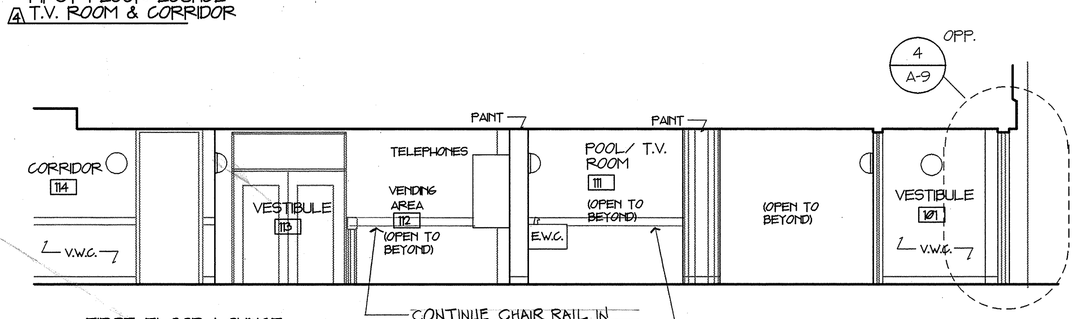

FIRST FLOOR LOUNGE
POOL ROOM & CORRIDOR

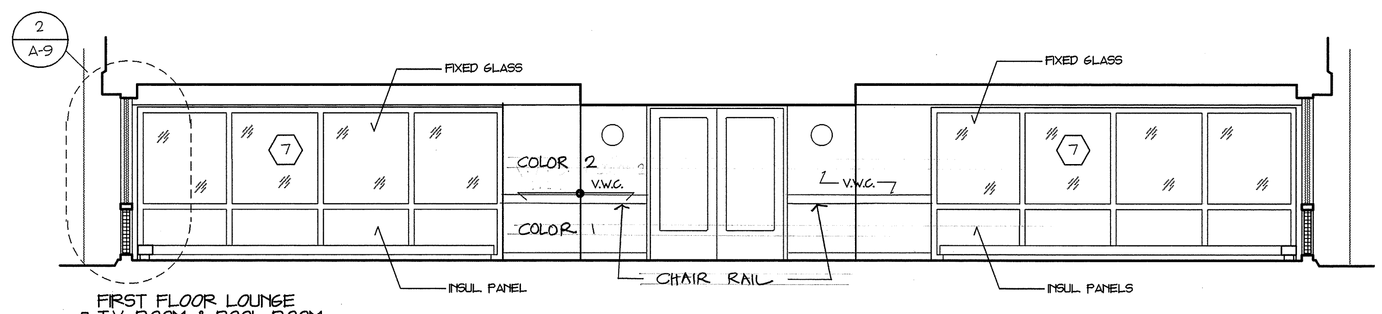

FIRST FLOOR LOUNGE
T.V. ROOM & POOL ROOM

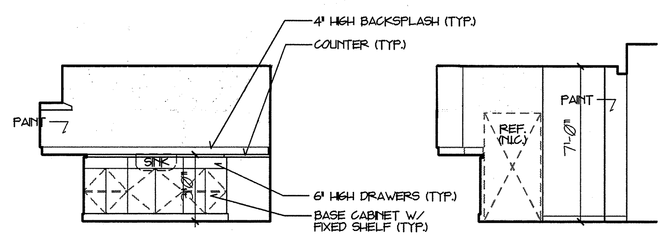

UNIT TYPE 'B'
KITCHEN RM. #03

UNIT TYPE 'B'
KITCHEN RM. #03

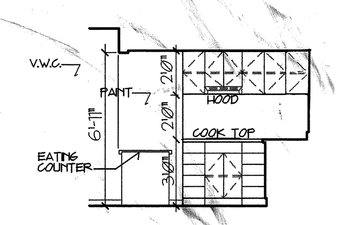

UNIT TYPE 'B'
KITCHEN RM. #03

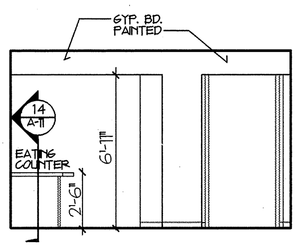

UNIT TYPE 'B'
LIVING ROOM #01

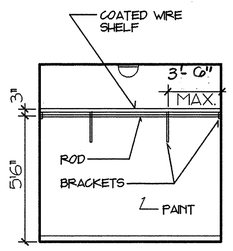

UNIT TYPE 'B'
WALK-IN
CLOSET RM. #05

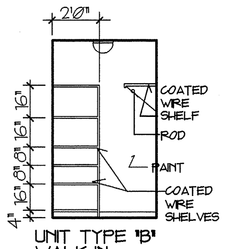

UNIT TYPE 'B'
WALK-IN
CLOSET RM. #05

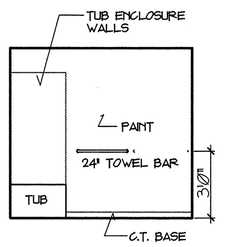

UNIT TYPE 'B'
BATH ROOM #06

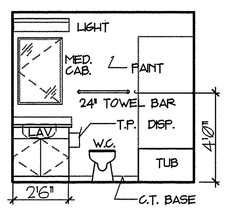

UNIT TYPE 'A', 'B'
BATH ROOM #06

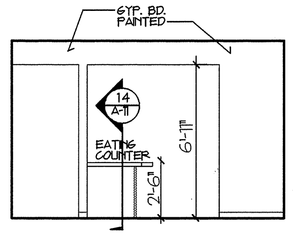

UNIT TYPE 'A'
LIVING ROOM #01

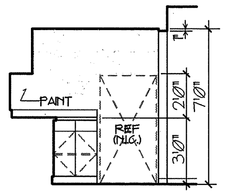

UNIT TYPE 'A'
KITCHEN RM. #03

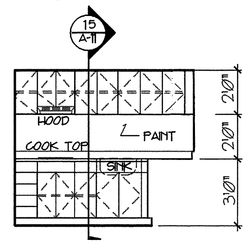

UNIT TYPE 'A'
KITCHEN RM. #03

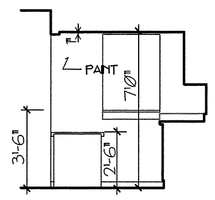

UNIT TYPE 'A'
KITCHEN RM. #03

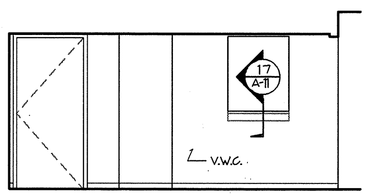

UNIT TYPE 'A'
HALLWAY RM. #07

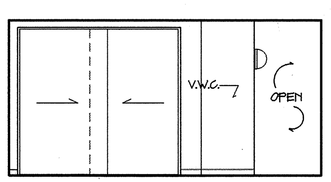

UNIT TYPE 'A'
HALLWAY RM. #07

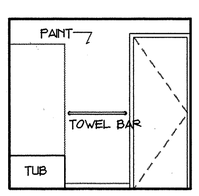

UNIT TYPE 'A'
BATH ROOM #06

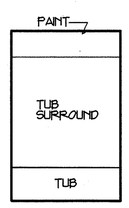

UNIT TYPE 'A'
BATH ROOM #06

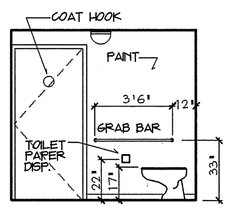

HANDICAPPED
ACCESS. BATHROOM
AT FIRST FLOOR

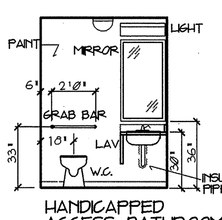

HANDICAPPED
ACCESS. BATHROOM
AT FIRST FLOOR

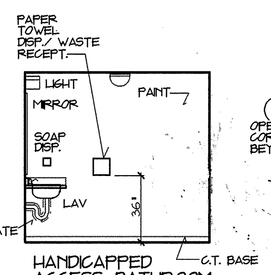

HANDICAPPED
ACCESS. BATHROOM
AT FIRST FLOOR

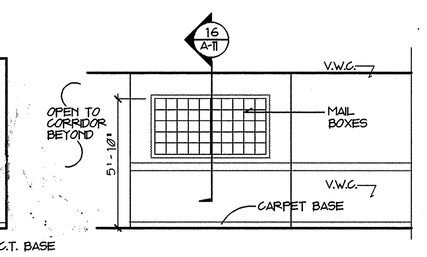

MAIL BOXES

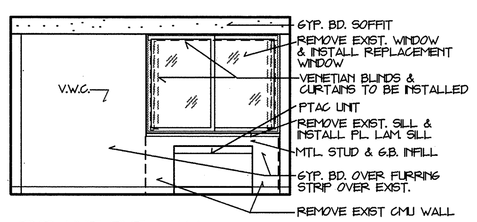

TYP. UNIT EXT. WALL
@ 2ND TO 4TH FLOORS

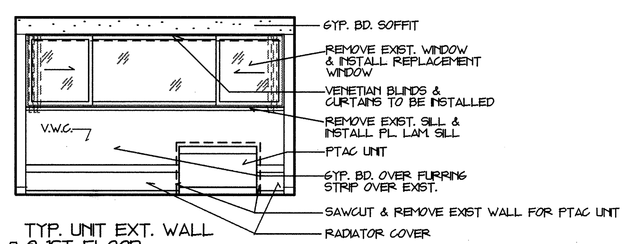

TYP. UNIT EXT. WALL
@ 1ST FLOOR

STATE OF CONNECTICUT — THE LAWRENCE ASSOCIATES ARCHITECTS & PLANNERS, P.C. — CORPORATE PRACTICE OF ARCHITECTURE — NO. 79

STATE OF CONNECTICUT — ANWAR HOSSAIN — NO. 8859 — LICENSED ARCHITECT

GRAPHIC SCALE 1/4"=1'
0 2' 4' 8' 16'

THE LAWRENCE ASSOCIATES
ARCHITECTS / PLANNERS, P.C.
1078 TOLLAND TURNPIKE, MANCHESTER, CONNECTICUT 06040
(203) 643-2161

NETC DWG NO. 30750-304 NETC SK NO.	DEPARTMENT OF THE NAVY — NAVAL FACILITIES ENGINEERING COMMAND NAVAL EDUCATION AND TRAINING CENTER NEWPORT, RHODE ISLAND		
DES. AH	REPAIRS AND ALTERATIONS TO: BUILDING #678		
DR. RBF			
BR.			
DIR.			
APPROVED / DATE	DWG TITLE INTERIOR ELEVATIONS		
SATISFACTORY TO DATE 11-22-94	SIZE F	CODE IDENT NO. 80091	NAVFAC DRAWING NO. 2171435
			CONSTR. CONTR. NO. N62472-93-C-1998
	SCALE AS SHOWN	SPEC. 93-C-1998	SHEET A-7 9 of 44

REVISIONS			
SYMBOL	DESCRIPTION	DATE	APPR.

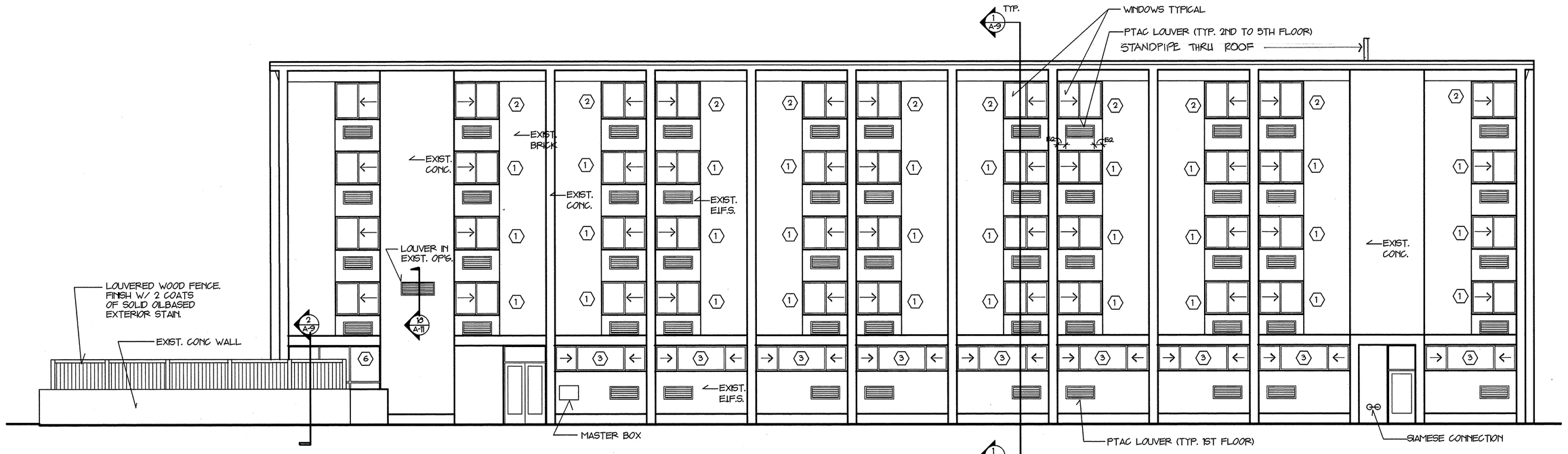

WEST EXTERIOR ELEVATION

SCALE 1/8" = 1'-0"

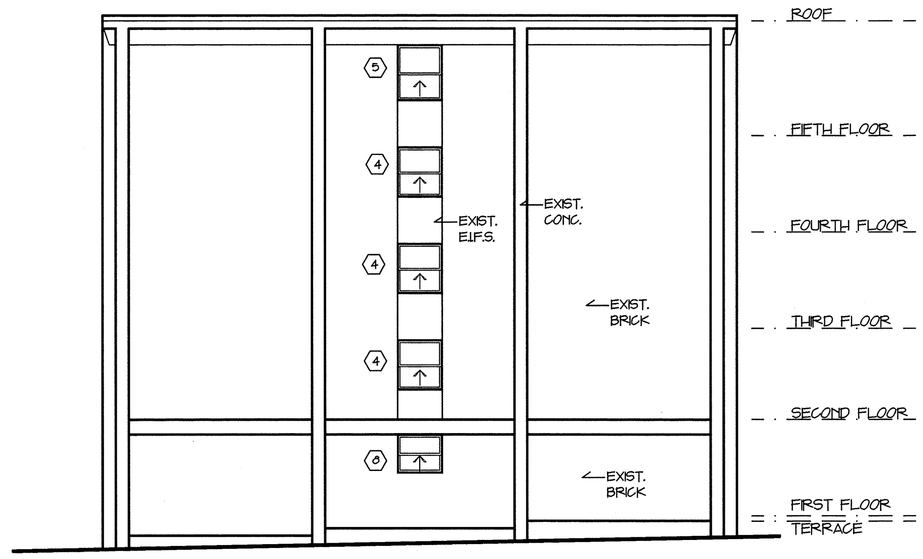

SOUTH EXTERIOR ELEVATION

SCALE 1/8" = 1'-0"

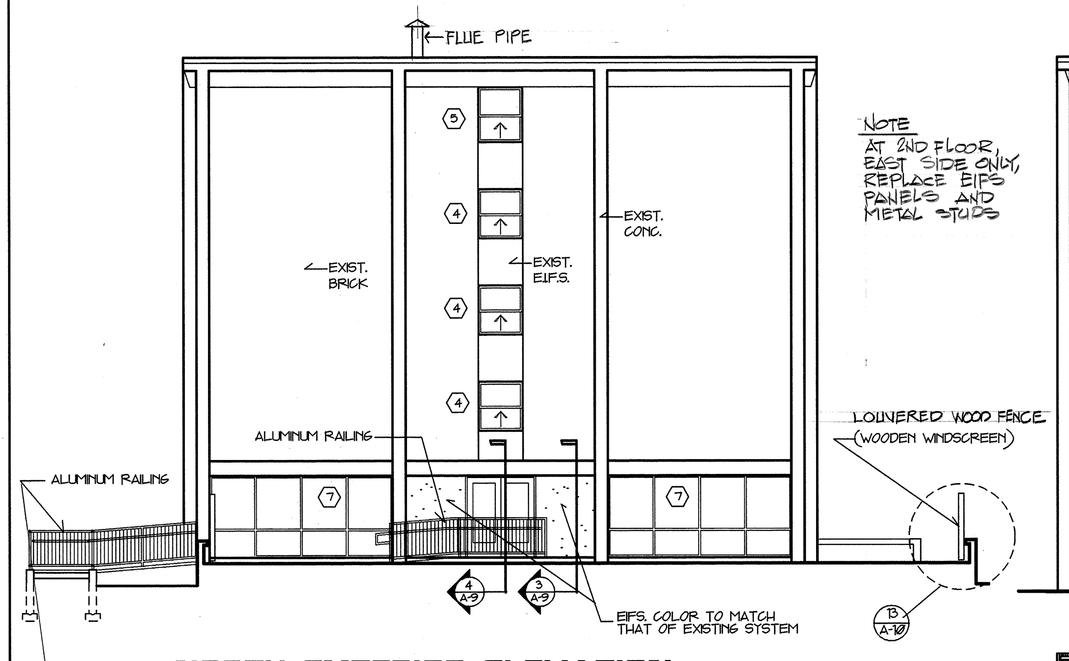

NOTE
AT 2ND FLOOR EAST SIDE ONLY, REPLACE EIFS PANELS AND METAL STUDS

LOUVERED WOOD FENCE (WOODEN WINDSCREEN)

NORTH EXTERIOR ELEVATION

SCALE 1/8" = 1'-0"

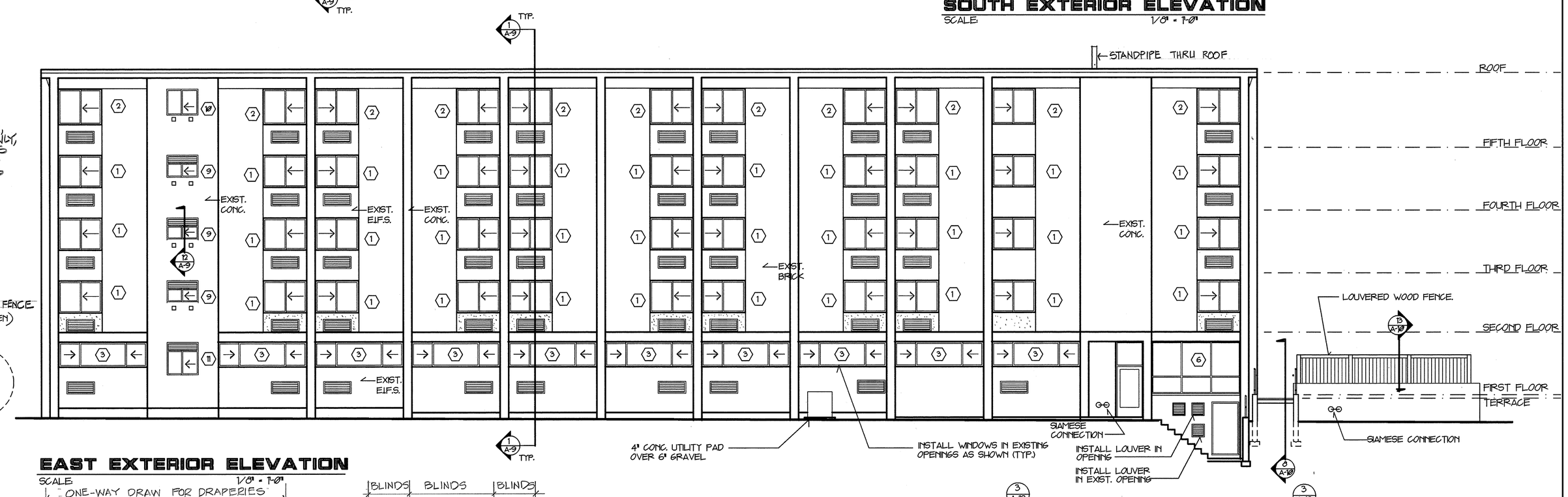

EAST EXTERIOR ELEVATION

SCALE 1/8" = 1'-0"

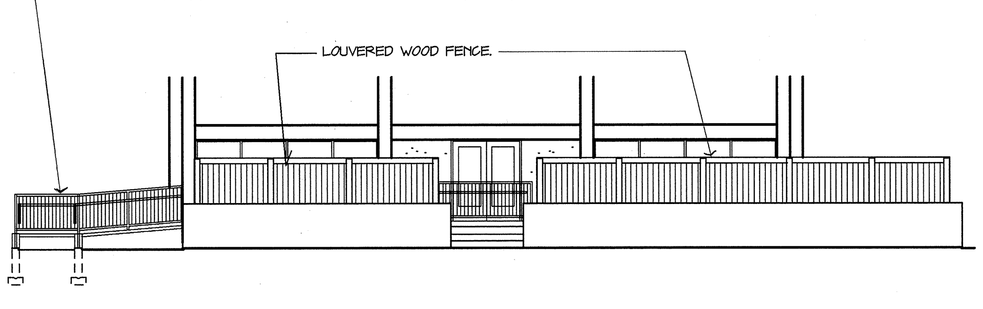

PARTIAL NORTH ELEVATION OF LOW WALL

SCALE 1/8" = 1'-0"

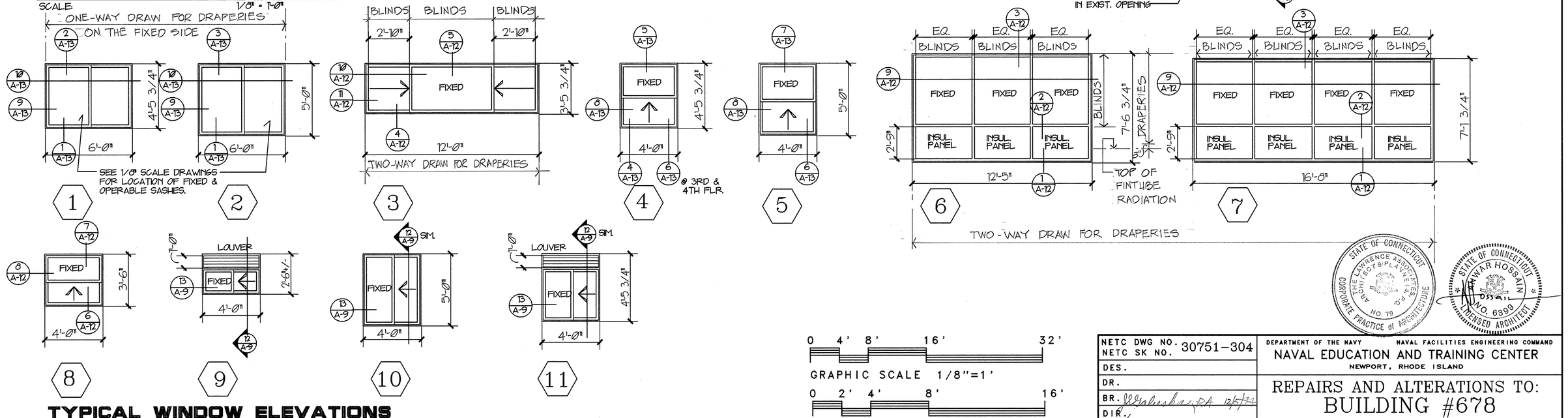

TYPICAL WINDOW ELEVATIONS

VIEWED FROM OUTSIDE

SCALE 1/4" = 1'-0"

NOTE: PROVIDE BLINDS & CURTAINS AT ALL WINDOWS EXCEPT WINDOW TYPES 9, 10, & 11.

0 4' 8' 16' 32'
GRAPHIC SCALE 1/8"=1'

0 2' 4' 8' 16'
GRAPHIC SCALE 1/4"=1'

THE LAWRENCE ASSOCIATES
ARCHITECTS / PLANNERS, P.C.
1078 TOLLAND TURNPIKE, MANCHESTER, CONNECTICUT 06040
(203) 643-2181

NETC DWG NO. 30751-304 NETC SK NO.	DEPARTMENT OF THE NAVY — NAVAL FACILITIES ENGINEERING COMMAND NAVAL EDUCATION AND TRAINING CENTER NEWPORT, RHODE ISLAND		
DES.	REPAIRS AND ALTERATIONS TO: BUILDING #678		
DR.			
BR.			
DIR.			
APPROVED / DATE 12/12/94	DWG TITLE: EXTERIOR ELEVATIONS WINDOW ELEVATIONS		
SATISFACTORY TO / DATE 11-22-94	SIZE: F	CODE IDENT NO.: 80091	NAVFAC DRAWING NO.: 2171436
		CONSTR. CONTR. NO.	N62472-93-C-1996
	SCALE: AS SHOWN	SPEC. 93-C-1996	SHEET A-8 10 OF 44

REVISIONS			
SYMBOL	DESCRIPTION	DATE	APPR.

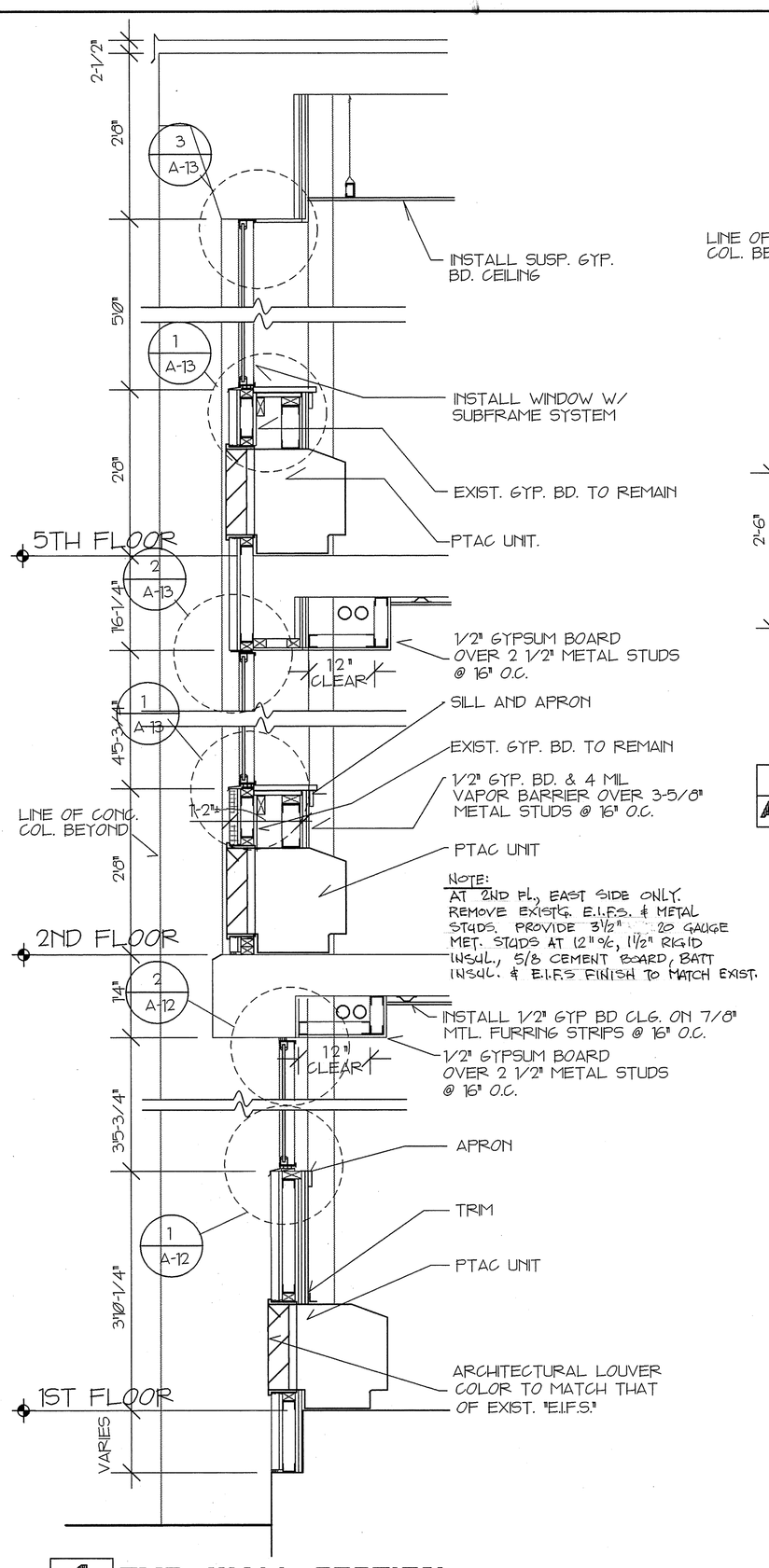

1 TYP. WALL SECTION
A-9 SCALE: 3/4" = 1'-0"

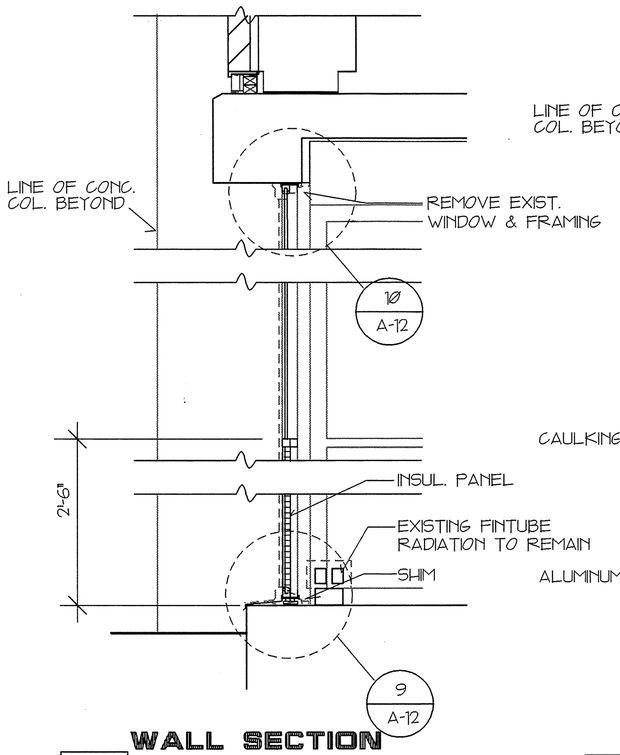

WALL SECTION @ LOUNGE
2 A-9 SCALE: 3/4" = 1'-0"

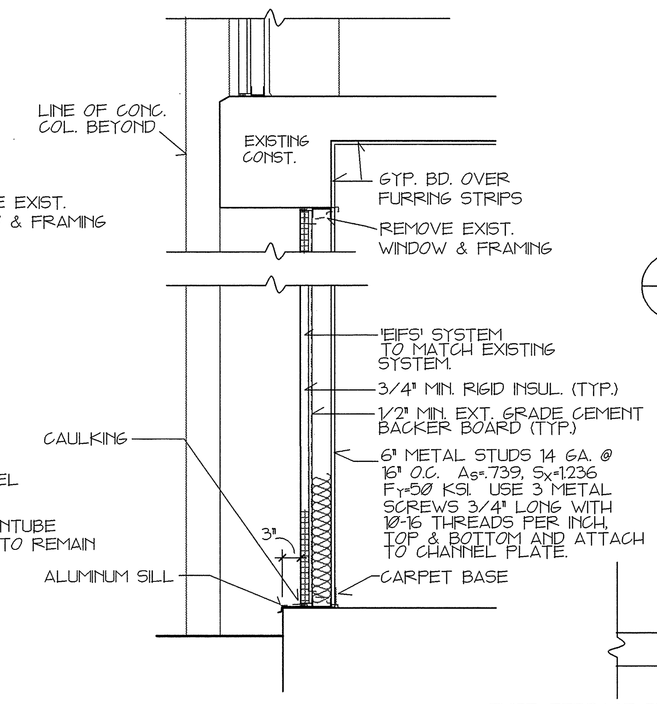

WALL SECTION @ NORTH ENTRY
3 A-9 SCALE: 3/4" = 1'-0"

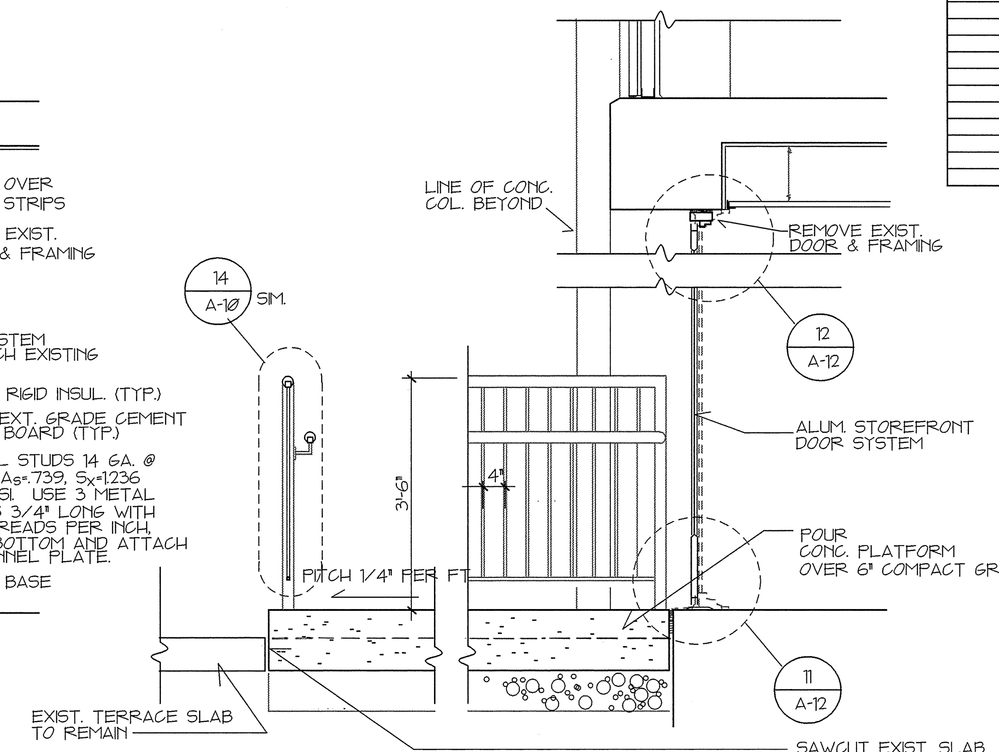

4 NORTH ENTRY
A-9 SCALE: 3/4" = 1'-0"

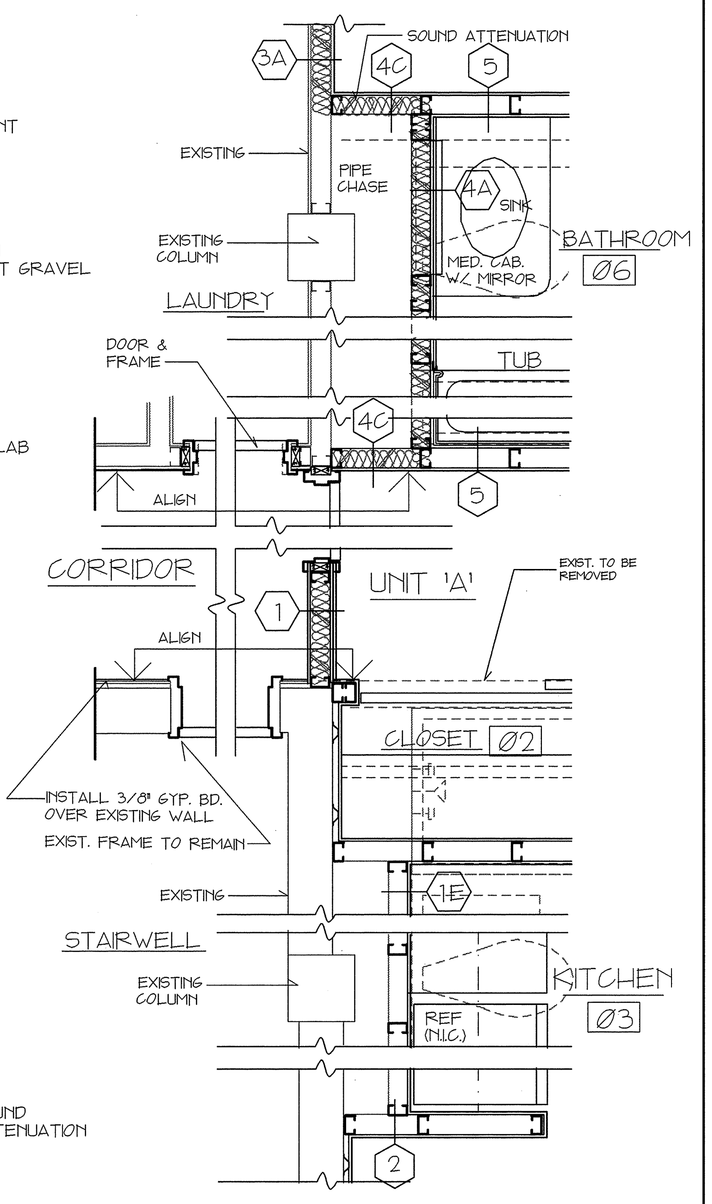

PLAN DTL. @ END OF HALLWAY
8 A-9 SCALE: 3/4" = 1'-0"

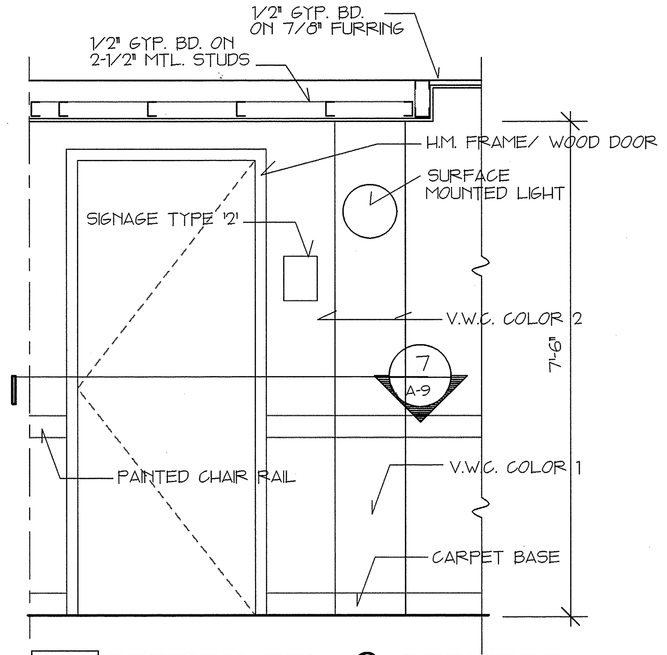

5 SECTION DTL. @ CORRIDOR
A-9 SCALE: 3/4" = 1'-0"

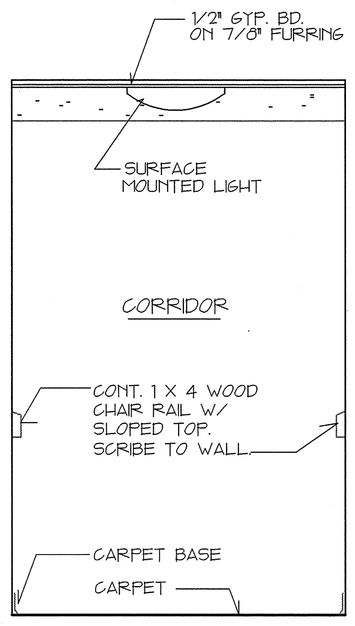

6 SECTION DTL. @ CORRIDOR
A-9 SCALE: 3/4" = 1'-0"

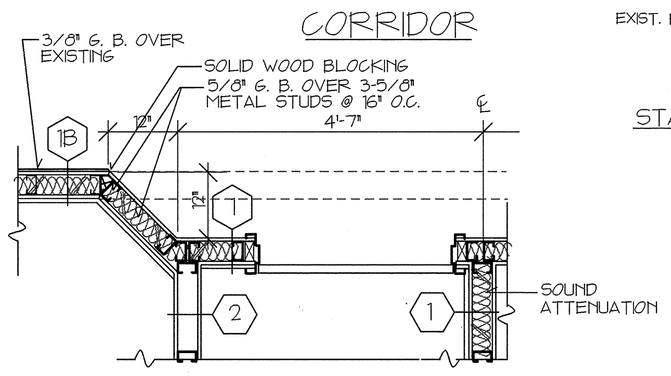

7 PLAN DTL. @ CORRIDOR
A-9 SCALE: 3/4" = 1'-0"

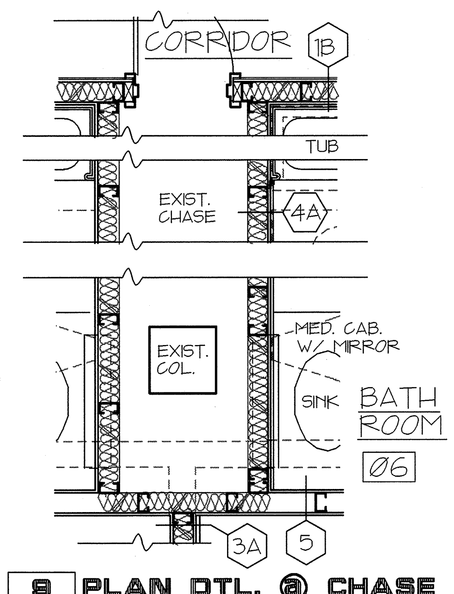

9 PLAN DTL. @ CHASE
A-9 SCALE: 3/4" = 1'-0"

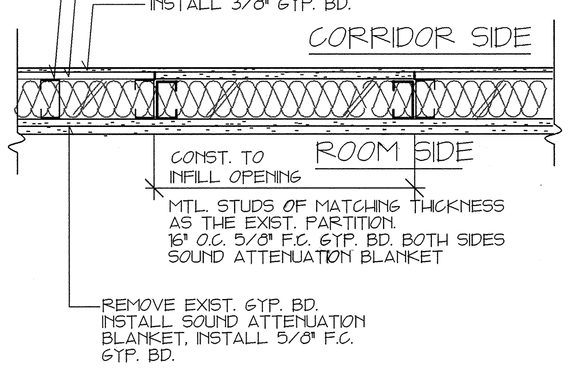

10 TYP. WALL INFILL DETAIL
A-9 SCALE: 1 1/2" = 1'-0"

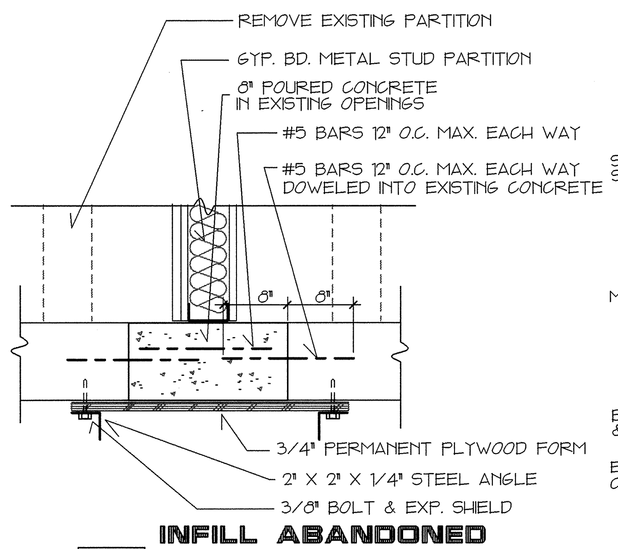

INFILL ABANDONED FLOOR OPENINGS
11 A-9 SCALE: 1 1/2" = 1'-0"

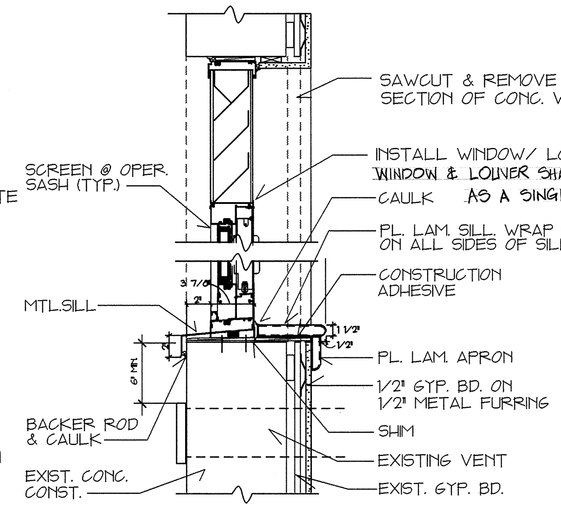

12 WINDOW @ LAUNDRY
A-9 SCALE: 3" = 1'-0"

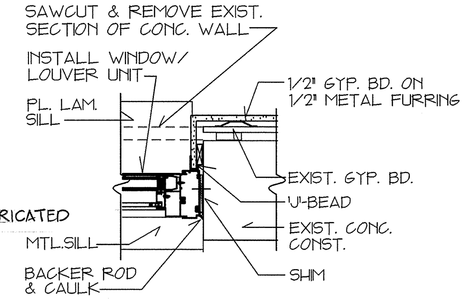

13 WINDOW @ LAUNDRY
A-9 SCALE: 3" = 1'-0"

STATE OF CONNECTICUT — THE LAWRENCE ASSOCIATES CORPORATE PRACTICE OF ARCHITECTURE — NO. 79

STATE OF CONNECTICUT — ANWAR HOSAIN — NO. 6999 — LICENSED ARCHITECT

0 6" 1' 2' 4'
GRAPHIC SCALE 3/4" = 1'

0 3" 6" 1' 2'
GRAPHIC SCALE 1-1/2" = 1'

THE LAWRENCE ASSOCIATES
ARCHITECTS / PLANNERS, P.C.
1079 TOLLAND TURNPIKE, MANCHESTER, CONNECTICUT, 06040
(203) 643-2181

NETC DWG NO. 30752-304 NETC SK NO.	DEPARTMENT OF THE NAVY — NAVAL FACILITIES ENGINEERING COMMAND NAVAL EDUCATION AND TRAINING CENTER NEWPORT, RHODE ISLAND		
DES. AH	REPAIRS AND ALTERATIONS TO: BUILDING #678		
DR. RBF			
BR.			
DIR.			
APPROVED / DATE 12/12/94	DWG TITLE WALL SECTIONS & DETAILS		
SATISFACTORY TO / DATE 11-22-94	SIZE F / CODE IDENT NO. 80091	NAVFAC DRAWING NO. 2171437	
		CONSTR. CONTR. NO. N62472-93-C-1996	
	SCALE AS SHOWN	SPEC. 93-C-1996	SHEET A-9 11 OF 44

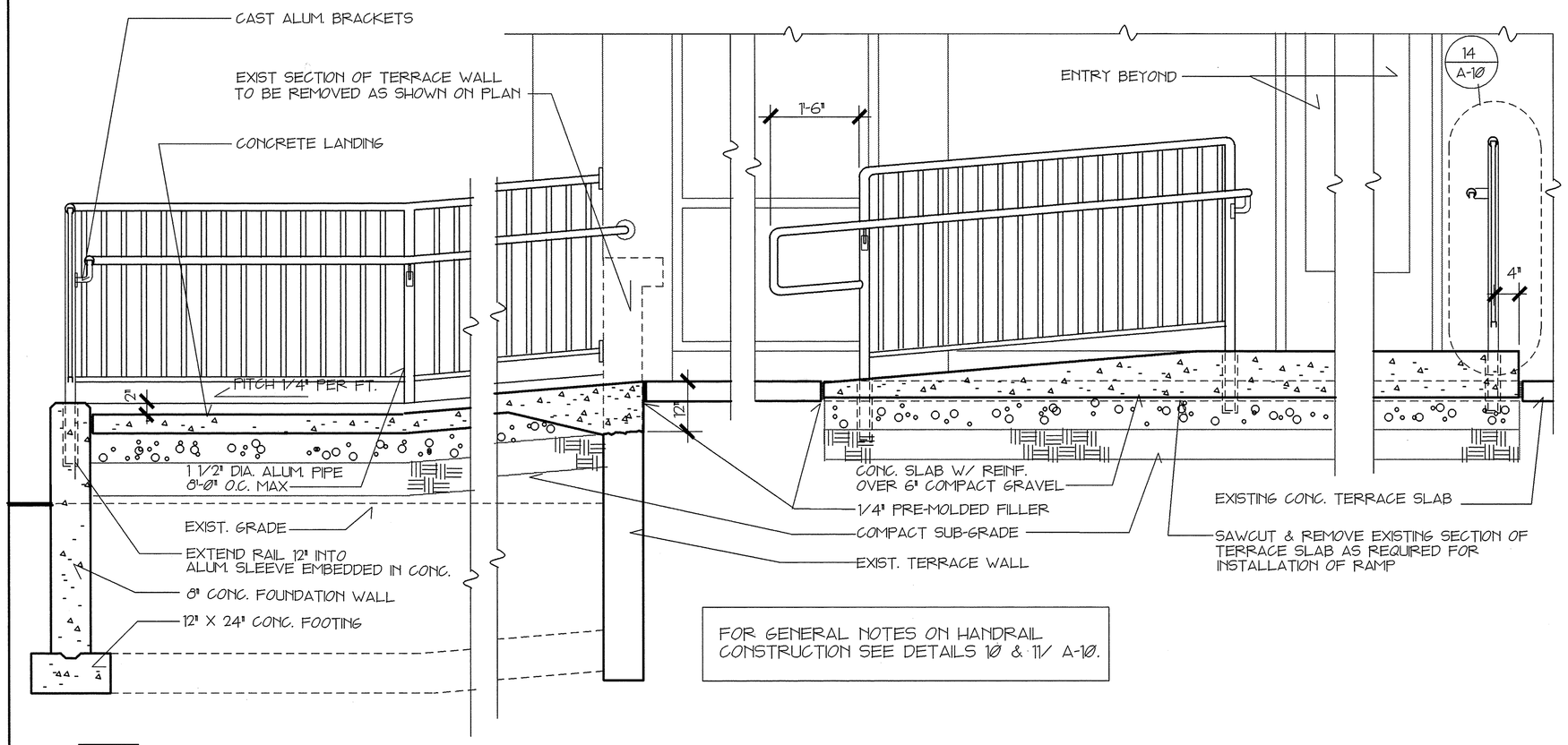

FOR GENERAL NOTES ON HANDRAIL CONSTRUCTION SEE DETAILS 10 & 11/ A-10.

8 / A-10 H.C. RAMPS SECTION
SCALE: 3/4"=1'-0"

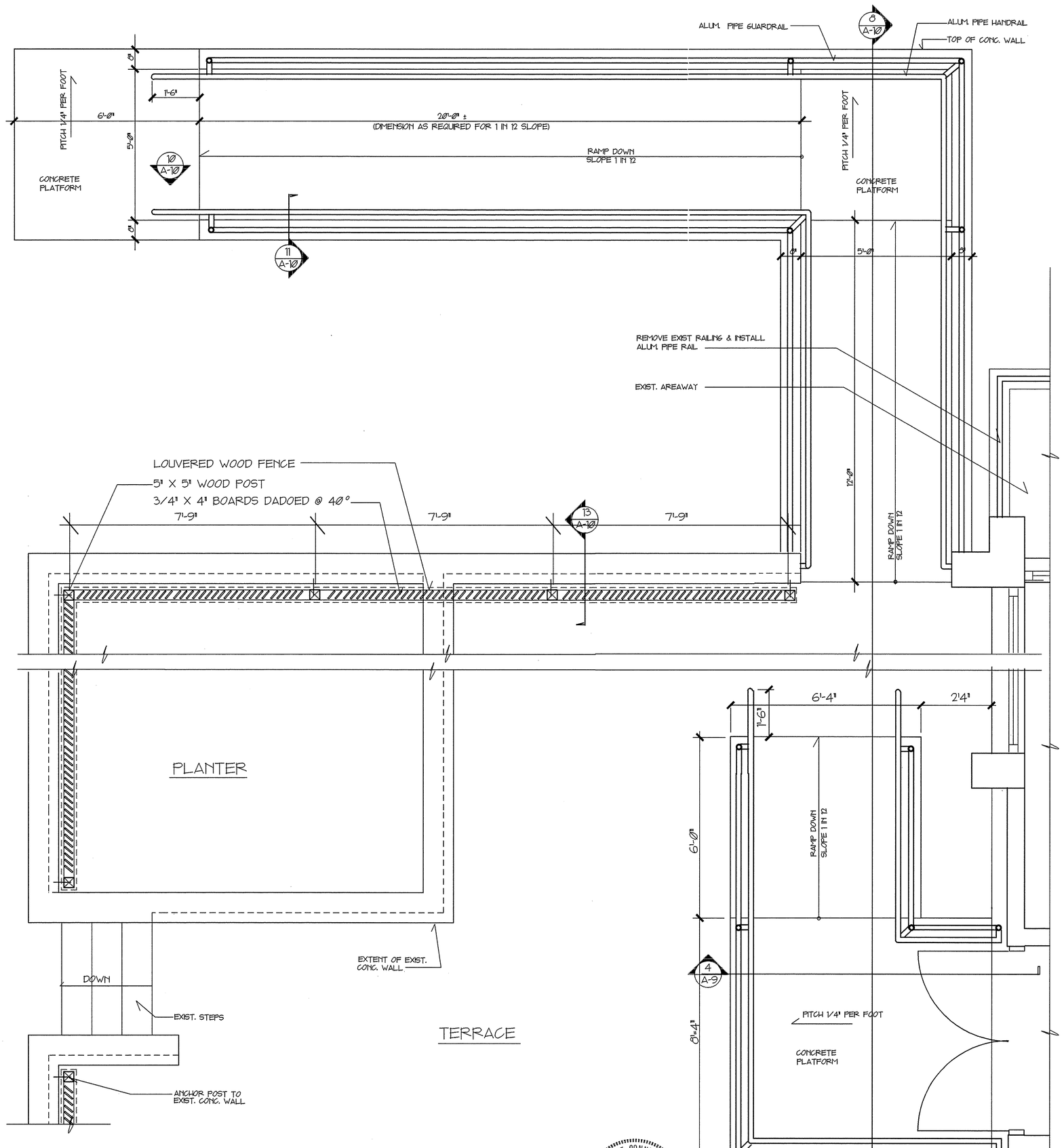

12 / A-10 H.C. RAMPS
SCALE: 1/2"=1'-0"

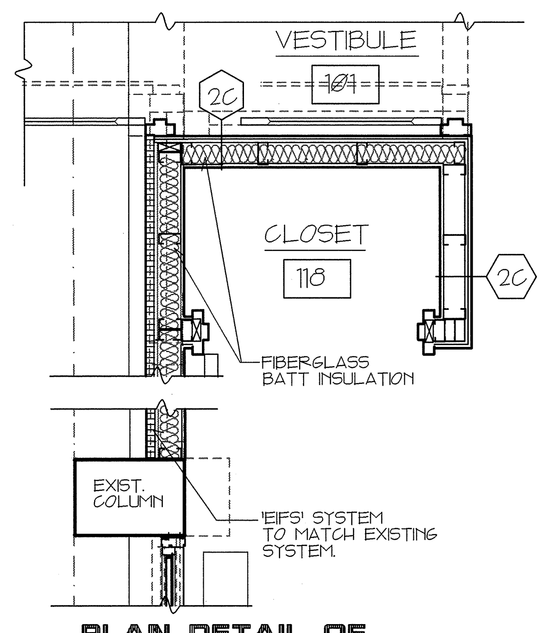

9 / A-10 PLAN DETAIL OF NORTH ENTRY CHASE
SCALE: 3/4" = 1'-0"

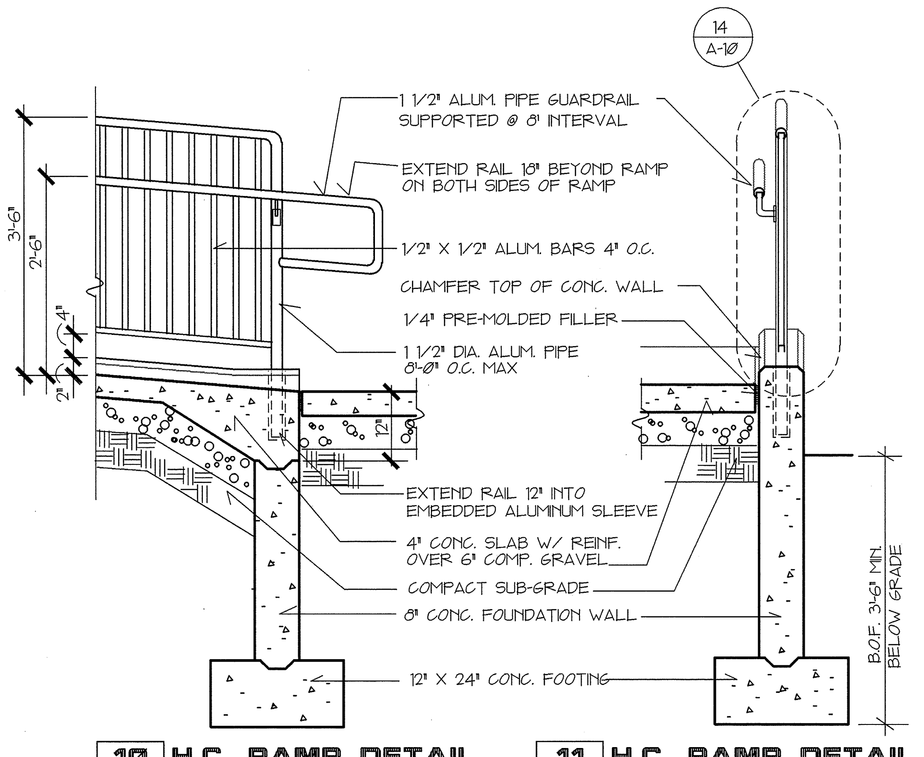

10 / A-10 H.C. RAMP DETAIL
SCALE: 3/4"=1'-0"

11 / A-10 H.C. RAMP DETAIL
SCALE: 3/4"=1'-0"

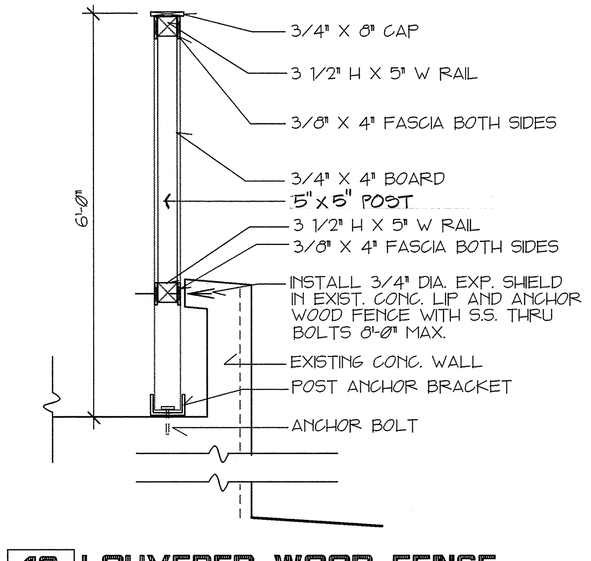

13 / A-10 LOUVERED WOOD FENCE
SCALE: 3/4" = 1'-0"

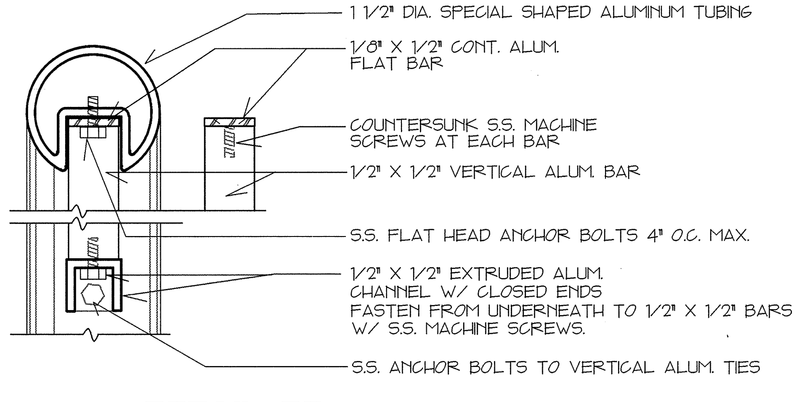

14 / A-10 DETAIL OF ALUMINUM HANDRAIL
SCALE: FULL SIZE

STATE OF CONNECTICUT — THE LAWRENCE ASSOCIATES ARCHITECTS & ENGINEERS, P.C. — CORPORATE PRACTICE of ARCHITECTURE — NO. 79

STATE OF CONNECTICUT — ANWAR HOSSAIN — NO. 6609 — LICENSED ARCHITECT

0 1' 2' 4'
GRAPHIC SCALE 1/2"=1'-0"

0 1" 2" 4"
GRAPHIC SCALE FULL SIZE

0 6" 1' 2' 4'
GRAPHIC SCALE 3/4"=1'

THE LAWRENCE ASSOCIATES
ARCHITECTS / PLANNERS, P.C.
1075 TOLLAND TURNPIKE, MANCHESTER, CONNECTICUT 06040
(203) 643-2161

REVISIONS

SYMBOL	DESCRIPTION	DATE	APPR.

NETC DWG NO. 30753-304
NETC SK NO.
DES. AH
DR. RBF
BR. 12/12/94
DIR.
APPROVED 12/12/94
SATISFACTORY TO
DATE 11-22-94

DEPARTMENT OF THE NAVY — NAVAL FACILITIES ENGINEERING COMMAND
NAVAL EDUCATION AND TRAINING CENTER
NEWPORT, RHODE ISLAND

REPAIRS AND ALTERATIONS TO:
BUILDING #678

DWG TITLE: WALL SECTIONS & DETAILS

SIZE	CODE IDENT NO.	NAVFAC DRAWING NO.
F	80091	2171438
		CONSTR. CONTR. NO. N62472-93-C-1996
SCALE AS SHOWN		SPEC. 93-C-1996 SHEET A-10 12 of 44

REVISIONS			
SYMBOL	DESCRIPTION	DATE	APPR.

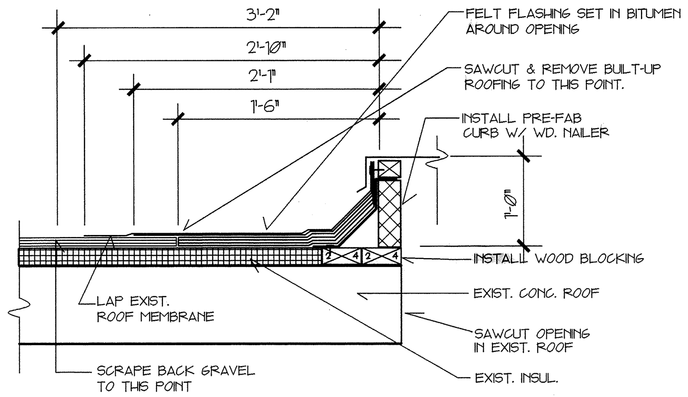

1 NEW ROOF OPENING
A-11 SCALE: 1-1/2"=1'-0"

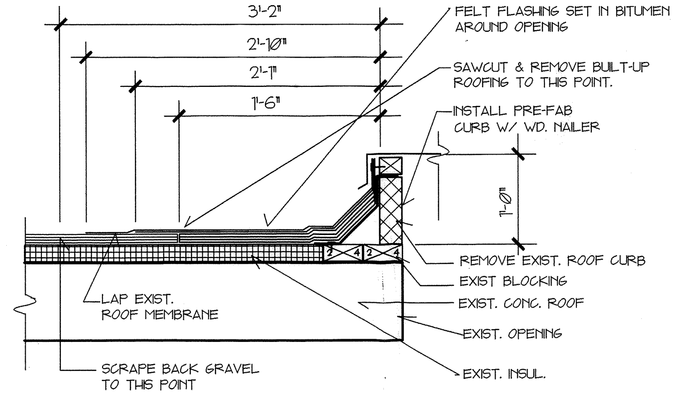

2 REPLACEMENT OF ROOF CURB @ EXIST. OP'G.
A-11 SCALE: 1-1/2"=1'-0"

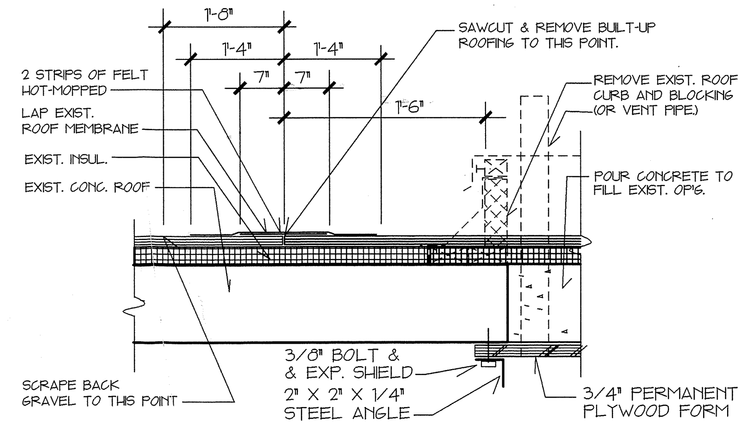

3 CLOSURE OF ROOF OP'G.
A-11 SCALE: 1-1/2"=1'-0"

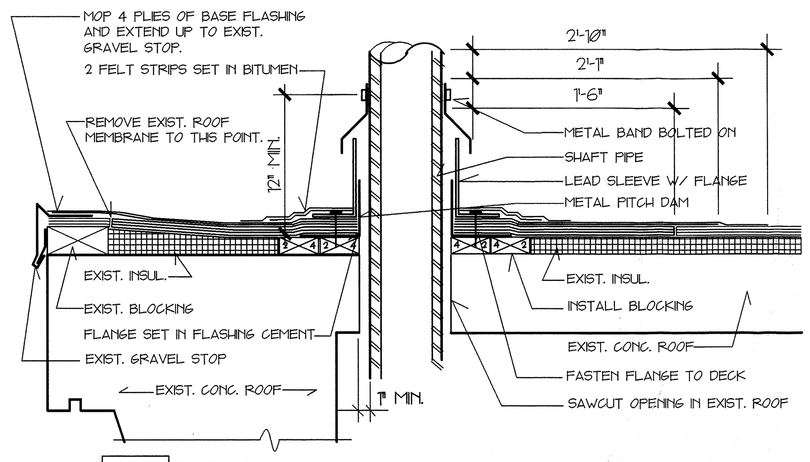

4 NEW STANDPIPE ROOF OPENING
A-11 SCALE: 1-1/2"=1'-0"

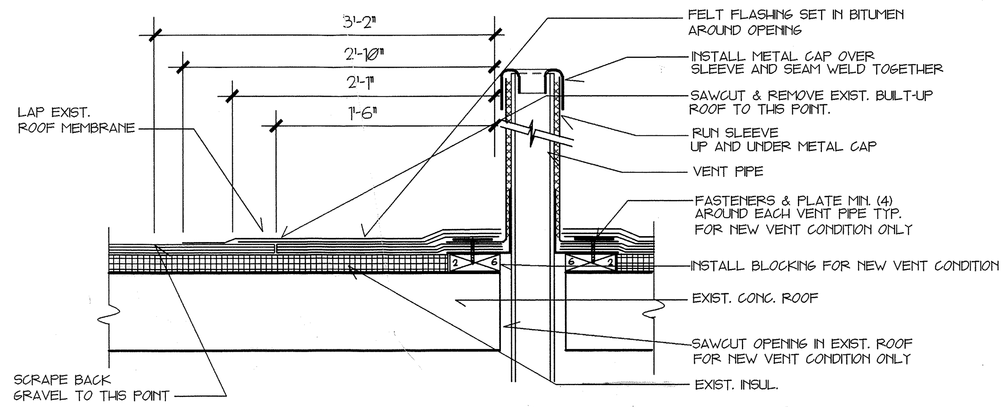

5 NEW/ EXISTING VENT PIPE OPENING
A-11 SCALE: 1-1/2"=1'-0"

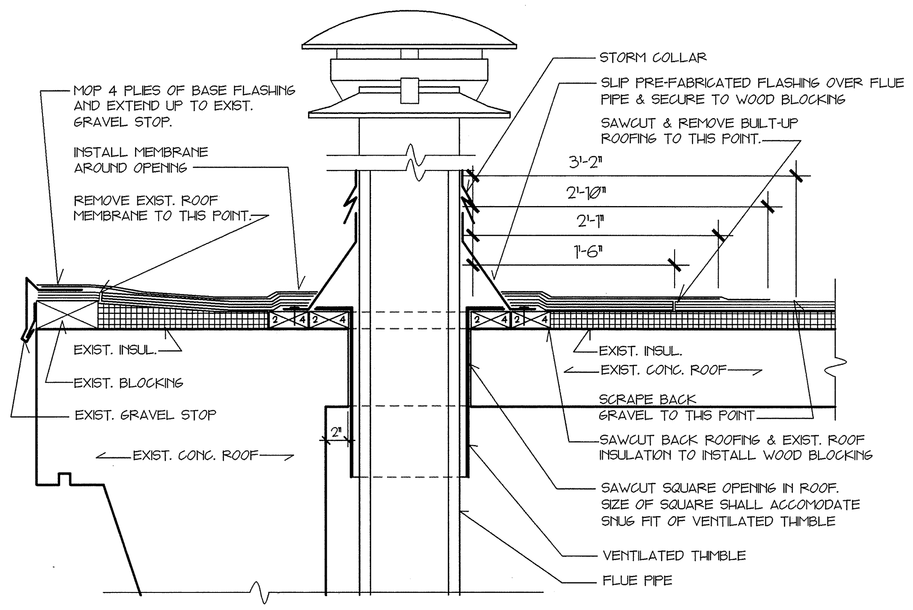

6 FLUE PIPE PENETRATION DETAIL
A-11 SCALE: 1-1/2"=1'-0"

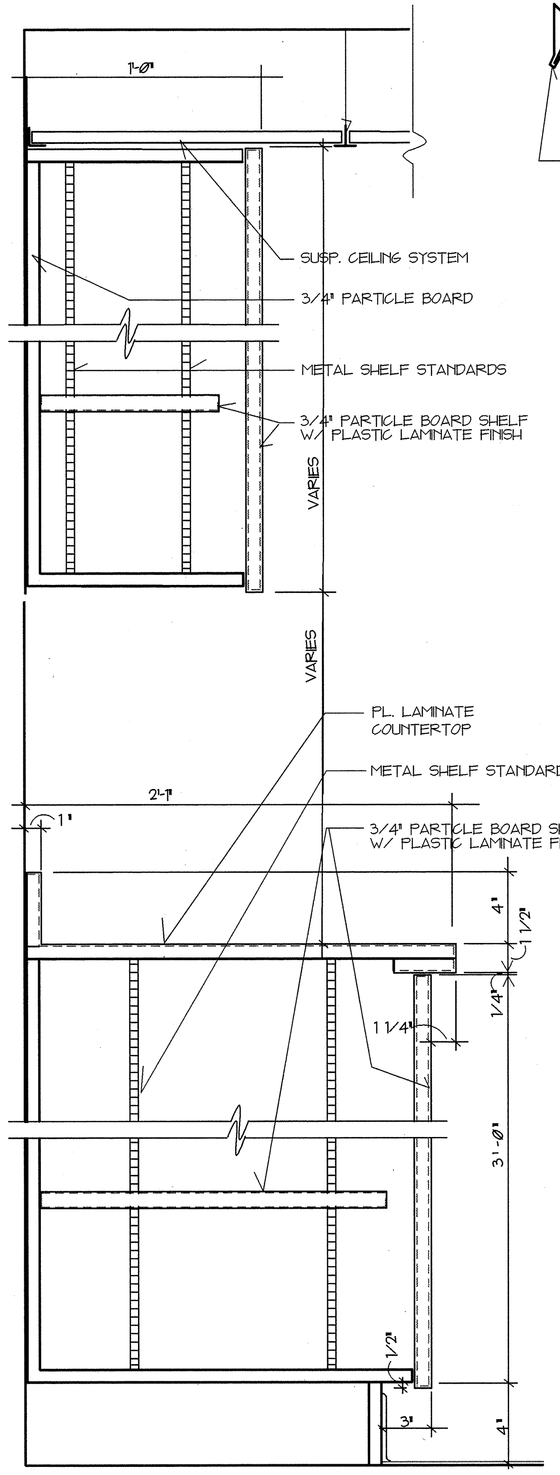

15 SECT. @ KIT. CABINETS
A-11 SCALE: 3"=1'-0"

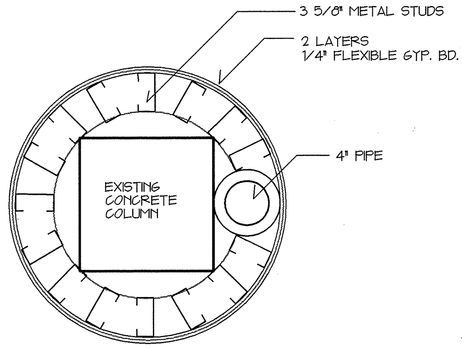

COLUMN IN POOL/T.V. ROOM
11 A-11 SCALE: 1-1/2"=1'-0"

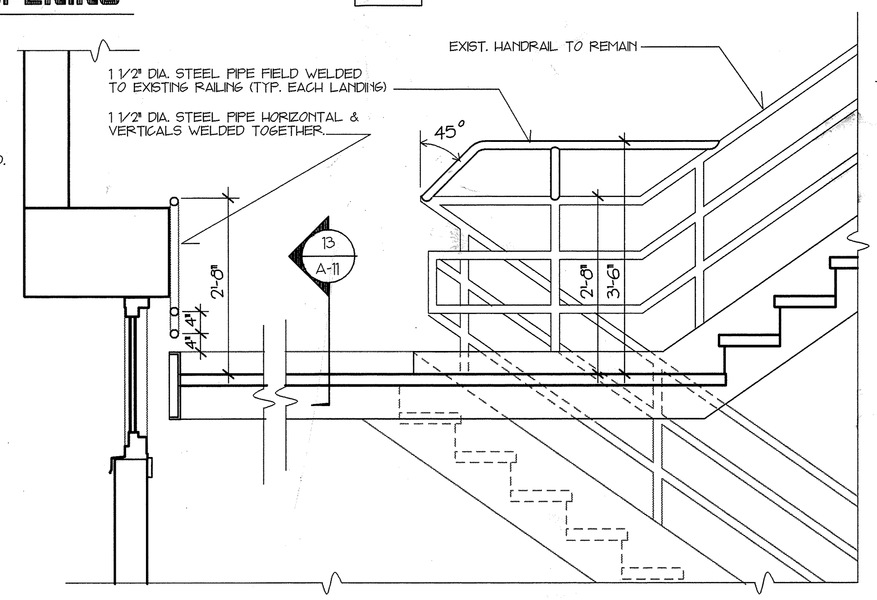

12 RAILING IN EXIST. STAIRWELLS
A-11 SCALE: 3/4"=1'-0"

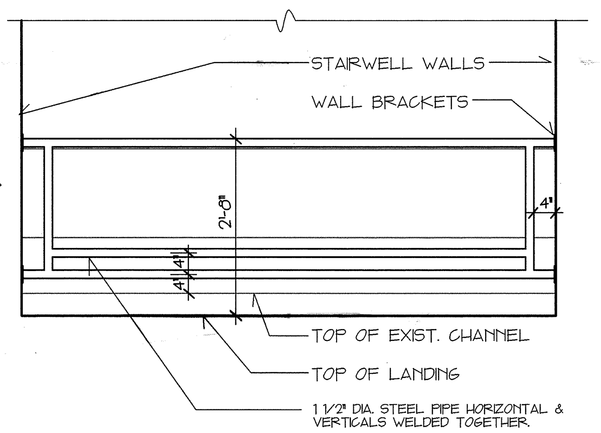

13 ELEVATION OF RAILING IN EXIST. STAIRWELLS
A-11 SCALE: 3/4"=1'-0"

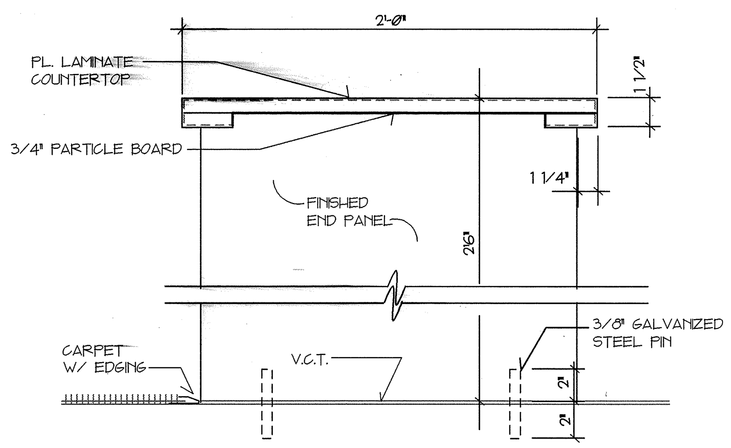

14 SECTION @ EATING COUNTER
A-11 SCALE: 3"=1'-0"

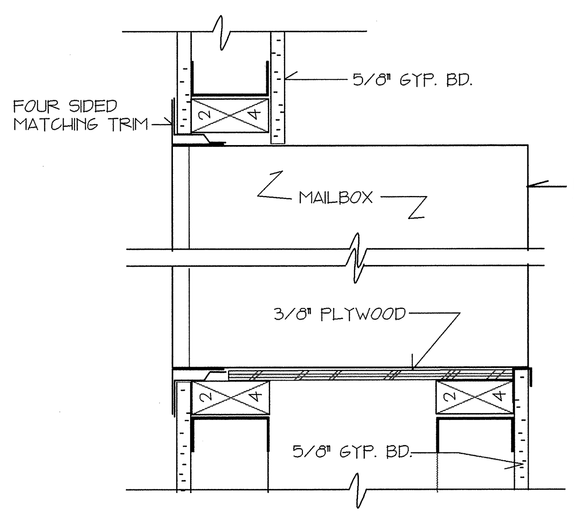

MAIL BOXES
- INSIDE DIM. EACH BOX: 6"W X 5"H X 13 1/2" D
- DOOR SIZE EACH BOX: 6 13/32"W X 5 3/16"H
- TYPE: REAR LOADING
- CONSTRUCTION: 1/4" THICK ALUM. PLATE DOORS, ALL OTHER CONSTRUCTION 1/8" THICK ALUM. PLATE
- ARRANGEMENT: 10 BOXES WIDE BY 5 BOXES HIGH
- LETTERING: DOORS SHALL BE ENGRAVED WITH 1" HIGH 3 DIGIT NUMBERS
- LOCKS: 2 KEY SYSTEM
- FINISH: BRUSHED ALUMINUM

16 MAILBOX DETAIL
A-11 SCALE: 3" = 1'-0"

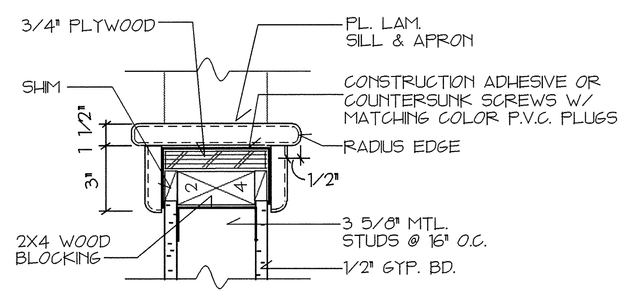

17 WOOD CAP DETAIL
A-11 SCALE: 3" = 1'-0"

0 6" 1' 2' 4'
GRAPHIC SCALE 3/4"=1'

0 3" 6" 1' 2'
GRAPHIC SCALE 1-1/2"=1'

STATE OF CONNECTICUT — THE LAWRENCE ASSOCIATES ARCHITECTS/PLANNERS P.C. — CORPORATE PRACTICE of ARCHITECTURE — NO. 70

STATE OF CONNECTICUT — NAVAR HOSSAIN — NO. 6999 — LICENSED ARCHITECT

THE LAWRENCE ASSOCIATES
ARCHITECTS / PLANNERS, P.C.
1079 TOLLAND TURNPIKE, MANCHESTER, CONNECTICUT 06040
(203) 643-2161

NETC DWG NO. 30754-304 NETC SK NO.	DEPARTMENT OF THE NAVY — NAVAL FACILITIES ENGINEERING COMMAND NAVAL EDUCATION AND TRAINING CENTER NEWPORT, RHODE ISLAND
DES. AH DR. RBF BR. 12/5/96 DIR.	REPAIRS AND ALTERATIONS TO: BUILDING #678
APPROVED DATE 12/12/96	DWG TITLE ROOF DETAILS SECTIONS & DETAILS
SATISFACTORY TO DATE	SIZE F — CODE IDENT NO. 80091 — NAVFAC DRAWING NO. 2171439
	CONSTR. CONTR. NO. N62472-93-C-1996
SCALE AS SHOWN	SPEC. 93-C-1996 — SHEET A-1 113 OF 44

REVISIONS			
SYMBOL	DESCRIPTION	DATE	APPR.

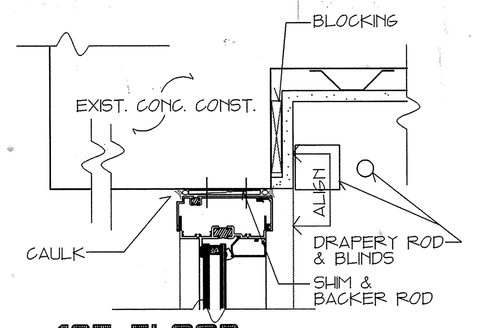

3 1ST FLOOR HEAD DTL. @ WINDOWWALL
A-12 SCALE: 3" = 1'-0"

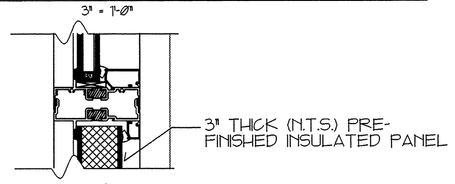

2 1ST FLOOR HOR. MULLION DETAIL @ WINDOWWALL
A-12 SCALE: 3" = 1'-0"

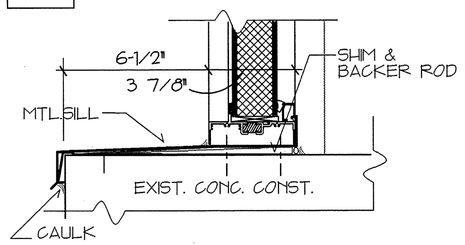

1 1ST FLOOR SILL DTL. @ WINDOWWALL
A-12 SCALE: 3" = 1'-0"

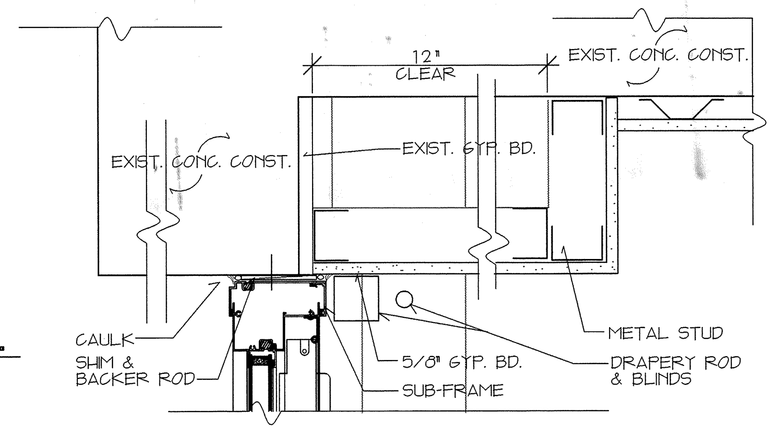

5 HEAD DTL. @ 1ST FLOOR
A-12 SCALE: 3" = 1'-0"

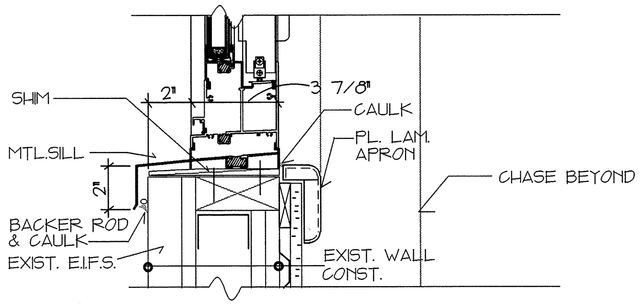

4 SILL DTL. @ 1ST FLOOR
A-12 SCALE: 3" = 1'-0"

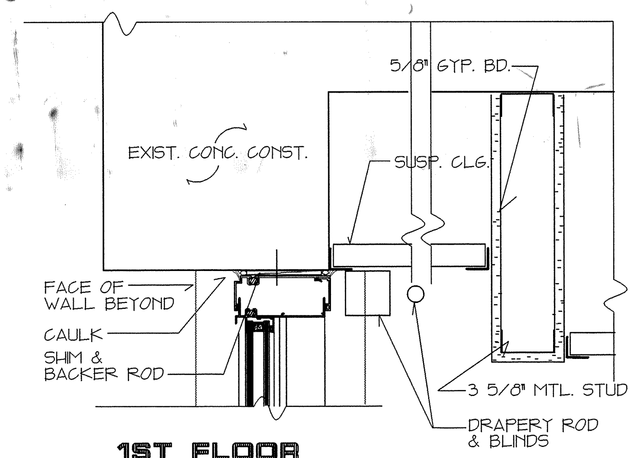

7 1ST FLOOR DOUBLE-HUNG HEAD DETAIL
A-12 SCALE: 3" = 1'-0"

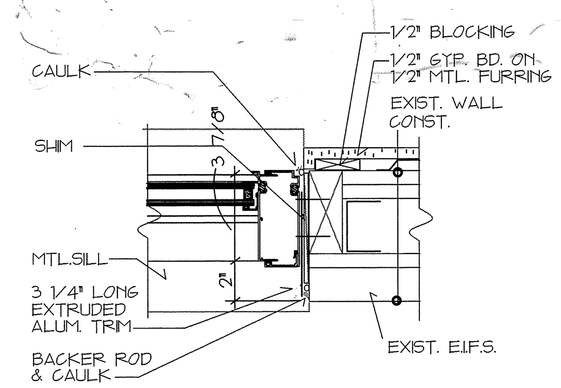

8 1ST FLOOR DOUBLE-HUNG JAMB DETAIL
A-12 SCALE: 3" = 1'-0"

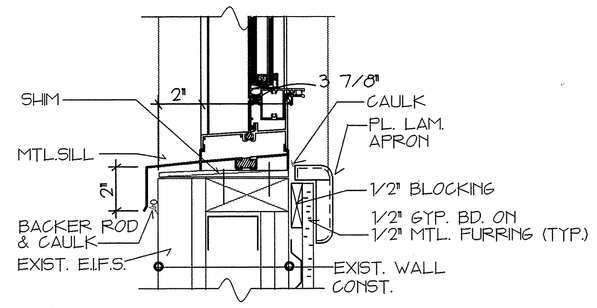

6 1ST FLOOR DOUBLE-HUNG SILL DETAIL
A-12 SCALE: 3" = 1'-0"

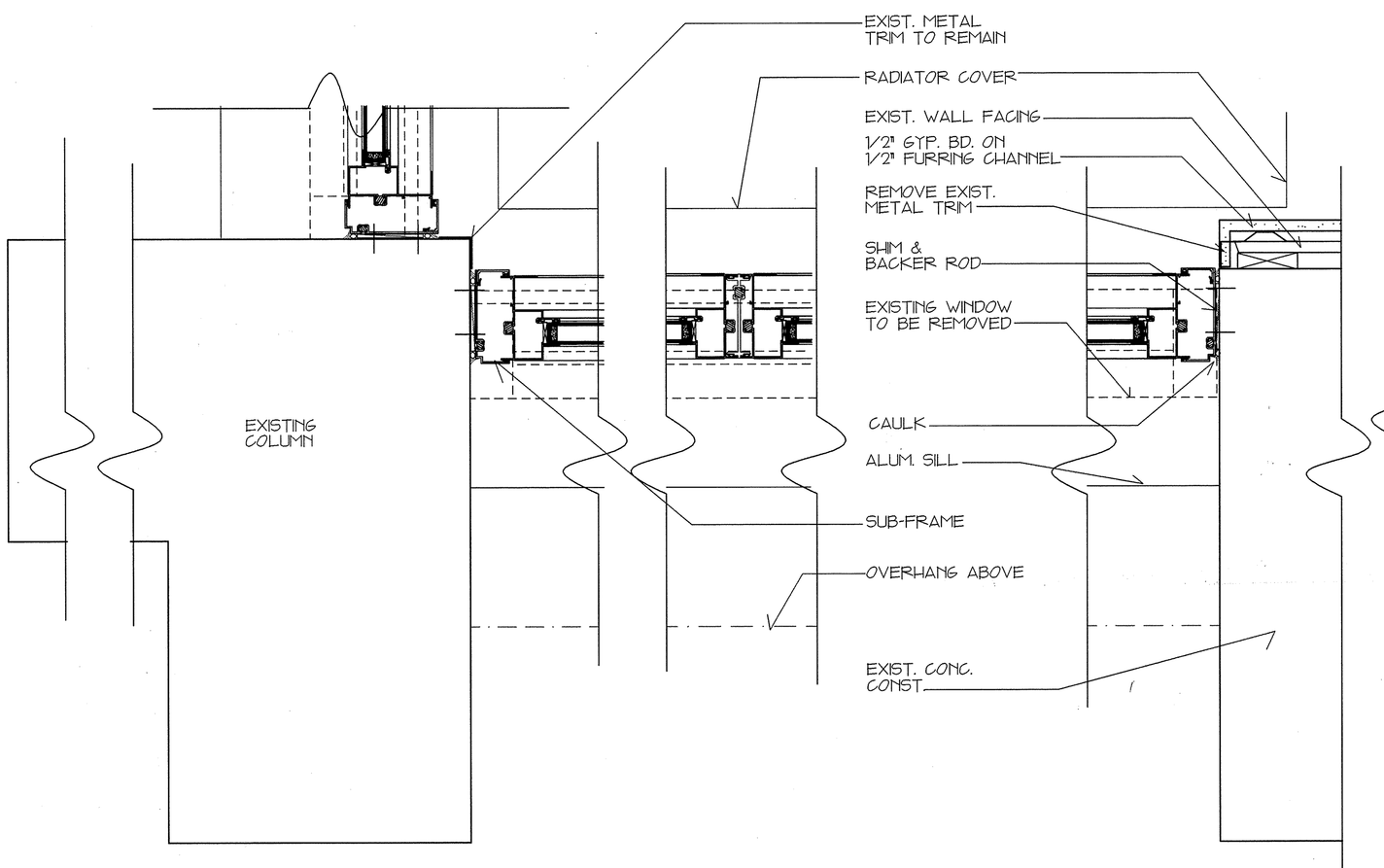

9 PLAN DETAIL OF NORTH WINDOW WALL CORNER @ 1ST FLOOR
A-12 SCALE: 3" = 1'-0"

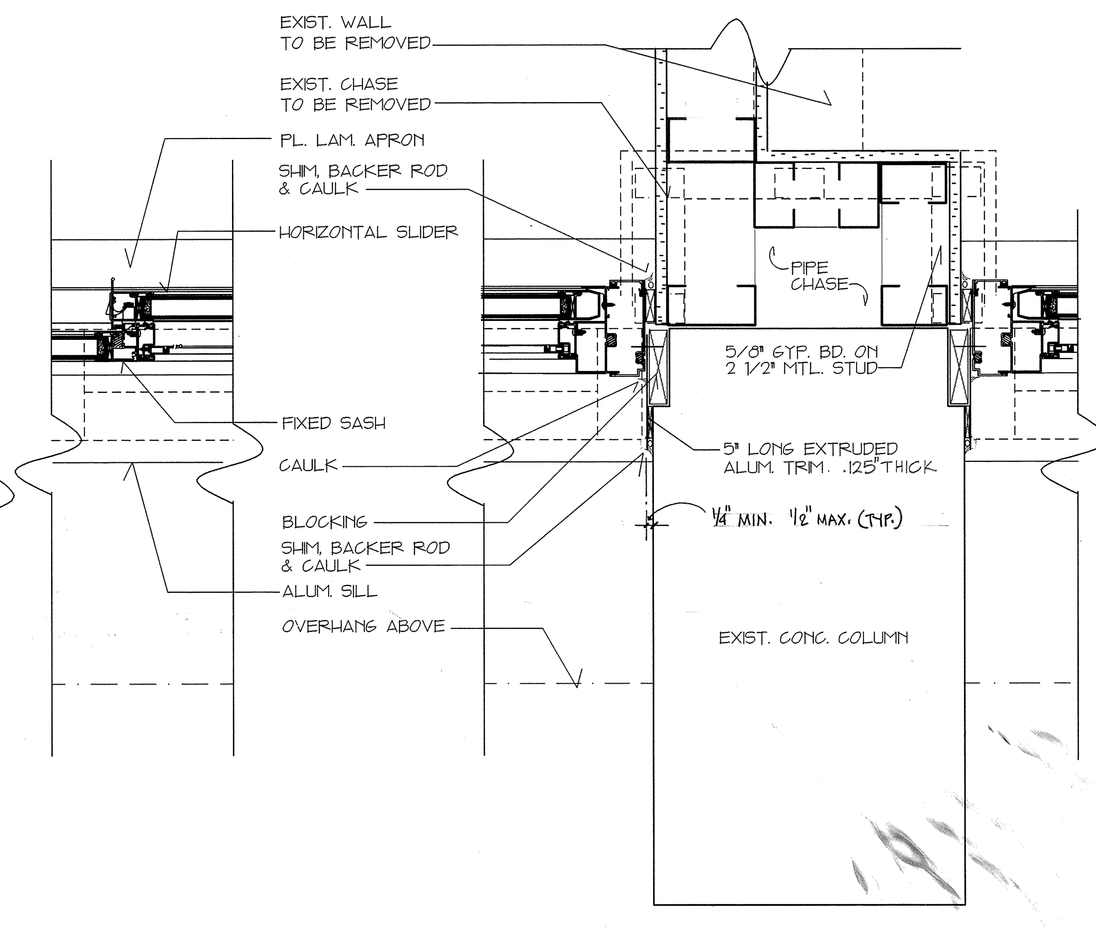

10 PLAN DETAIL OF 1ST FLOOR TYP. APT. WINDOW
A-12 SCALE: 3" = 1'-0"

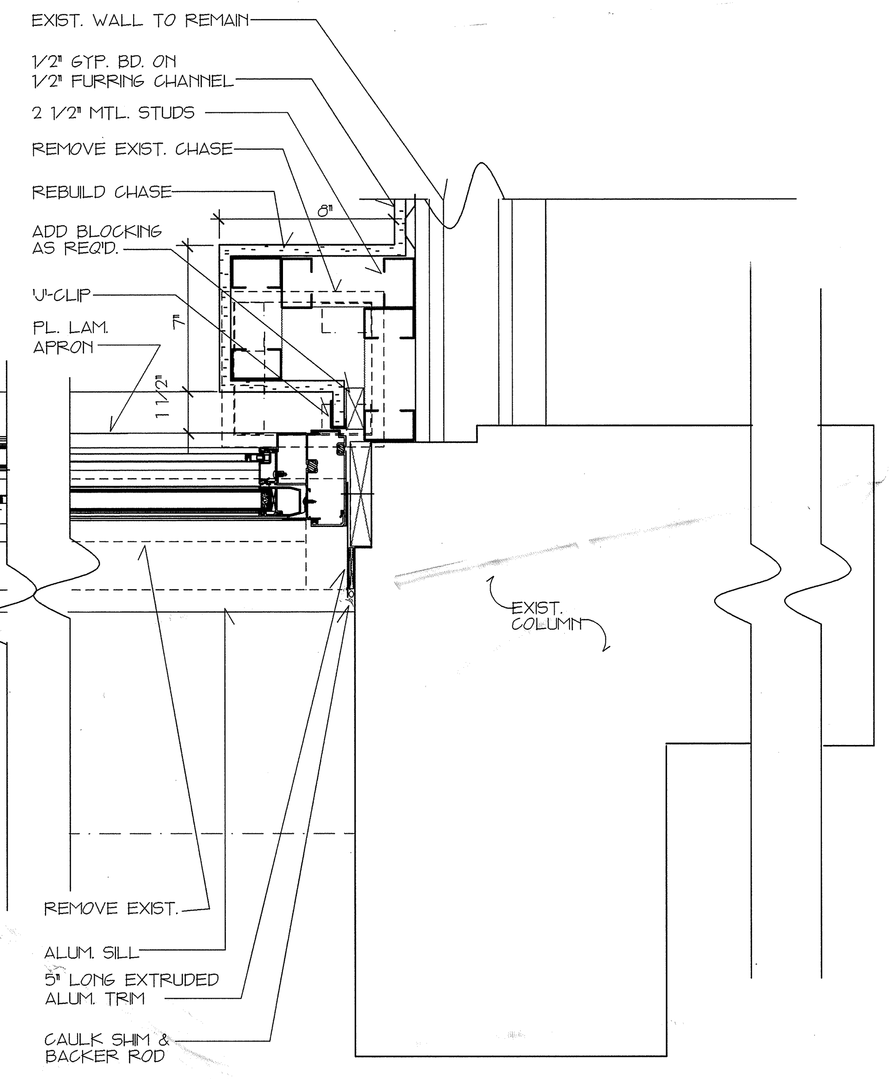

11 PLAN DETAIL OF SOUTH CORNER @ 1ST FLOOR
A-12 SCALE: 3" = 1'-0"

STATE OF CONNECTICUT — ANWAR HOSSAIN — LICENSED ARCHITECT — NO. 6890

0 3" 6" 12"
GRAPHIC SCALE 3"=1'

THE LAWRENCE ASSOCIATES
ARCHITECTS / PLANNERS, P.C.
1078 TOLLAND TURNPIKE, MANCHESTER, CONNECTICUT 06040
(203) 643-2181

NETC DWG NO. 30755-304 NETC SK NO.	DEPARTMENT OF THE NAVY — NAVAL FACILITIES ENGINEERING COMMAND NAVAL EDUCATION AND TRAINING CENTER NEWPORT, RHODE ISLAND	
DES. AH DR. RBF BR.	REPAIRS AND ALTERATIONS TO: BUILDING #678	
DIR.	DWG TITLE: WINDOW DETAILS	
APPROVED / DATE 12/12/94		
SATISFACTORY TO / DATE 1-22-94	SIZE: F — CODE IDENT NO.: 80091	NAVFAC DRAWING NO. 2171440
	CONSTR. CONTR. NO. N62472-93-C-1996	
	SCALE: AS SHOWN — SPEC. 93-C-1996	SHEET A-12 14 OF 44

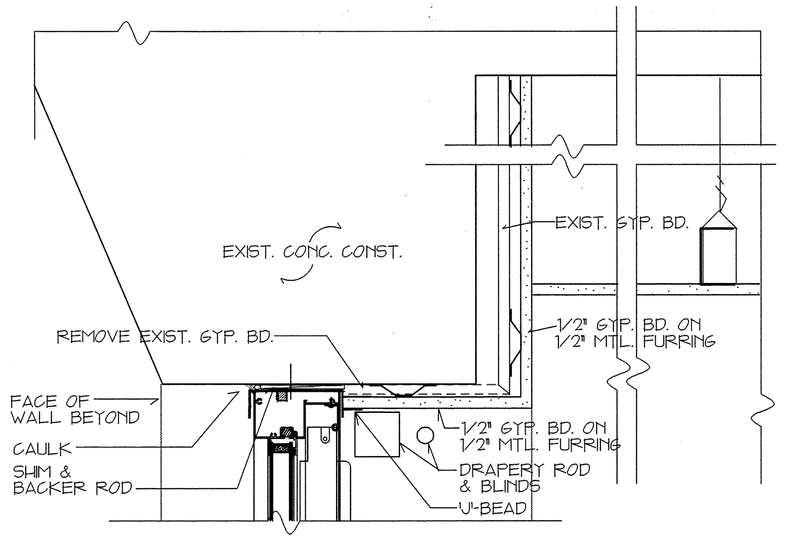

3 HEAD DETAIL @ 5TH FLOOR
A-13 SCALE: 3" = 1'-0"

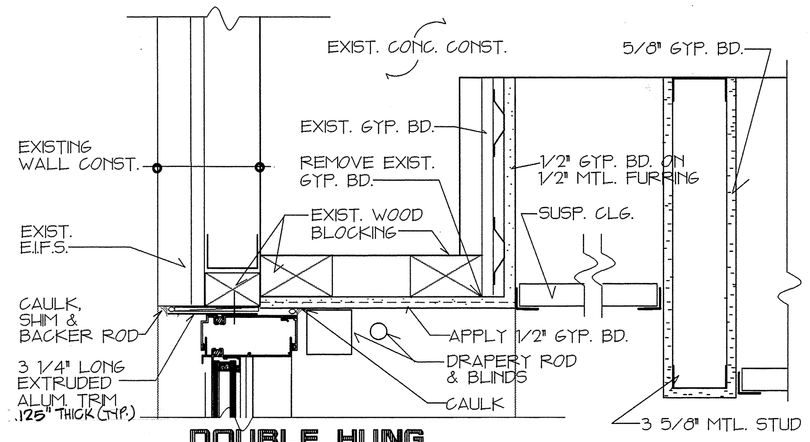

5 DOUBLE HUNG HEAD DTL. @ 2ND TO 4TH FLOOR
A-13 SCALE: 3" = 1'-0"

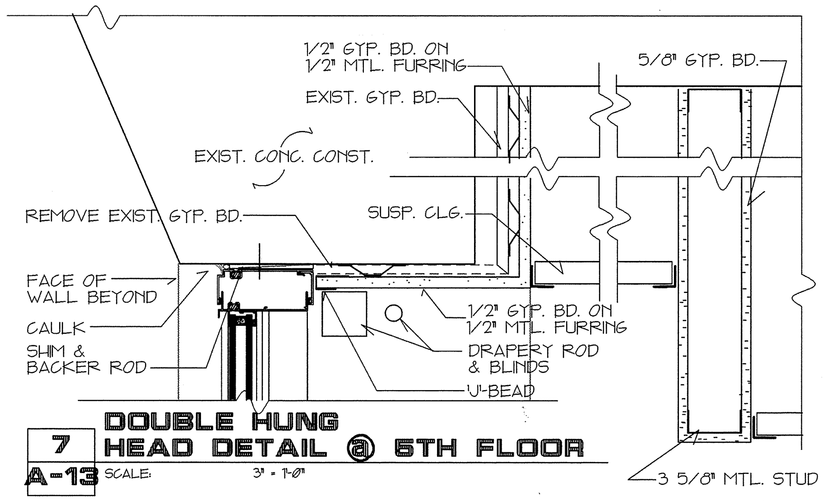

7 DOUBLE HUNG HEAD DETAIL @ 5TH FLOOR
A-13 SCALE: 3" = 1'-0"

REVISIONS			
SYMBOL	DESCRIPTION	DATE	APPR.

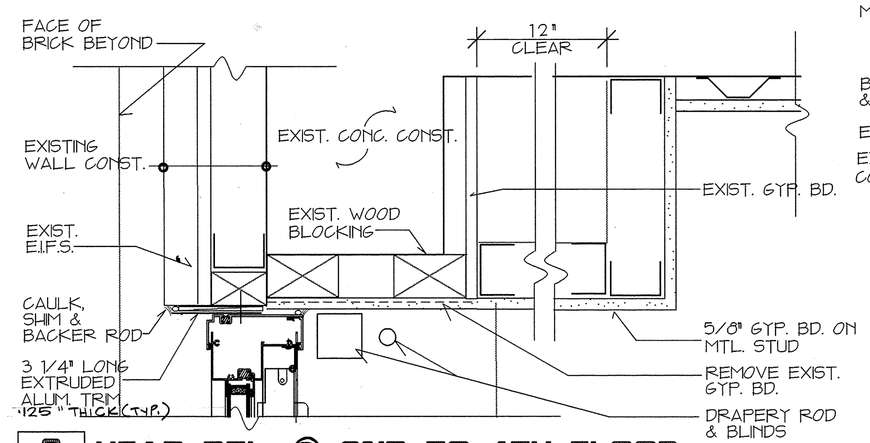

2 HEAD DTL. @ 2ND TO 4TH FLOOR
A-13 SCALE: 3" = 1'-0"

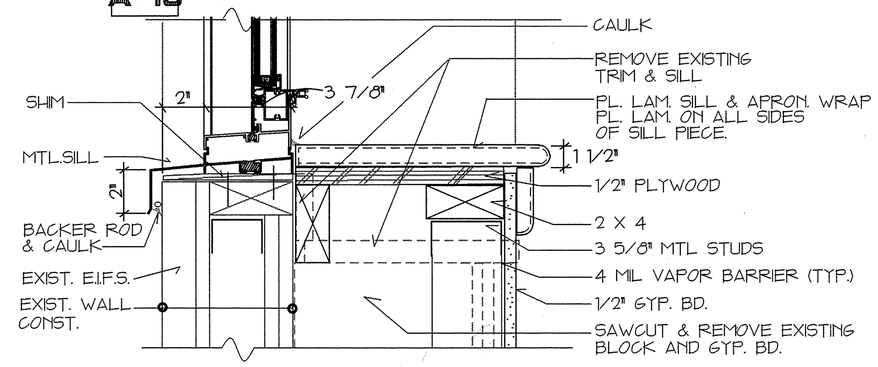

4 DOUBLE HUNG SILL DTL. @ 2ND FLOOR
A-13 SCALE: 3" = 1'-0"

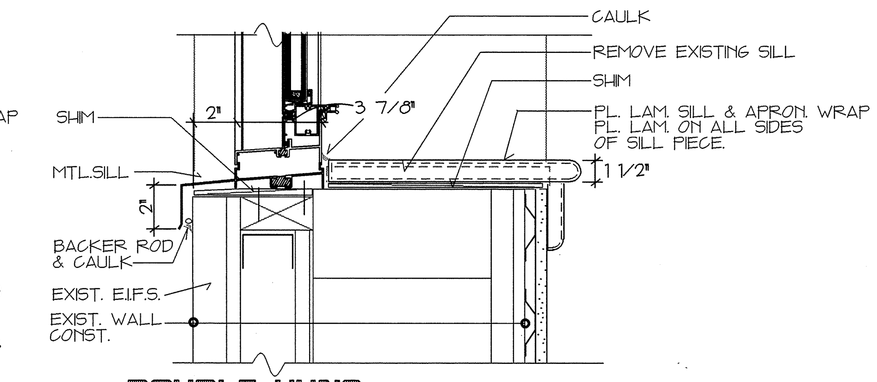

6 DOUBLE HUNG SILL DTL. @ 3RD TO 5TH FLOOR
A-13 SCALE: 3" = 1'-0"

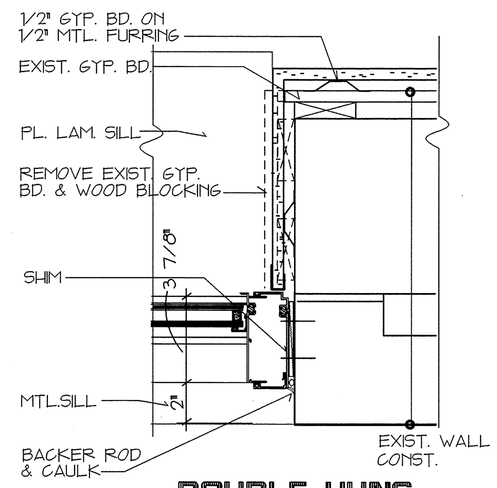

8 DOUBLE HUNG JAMB DETAIL
A-13 SCALE: 3" = 1'-0"

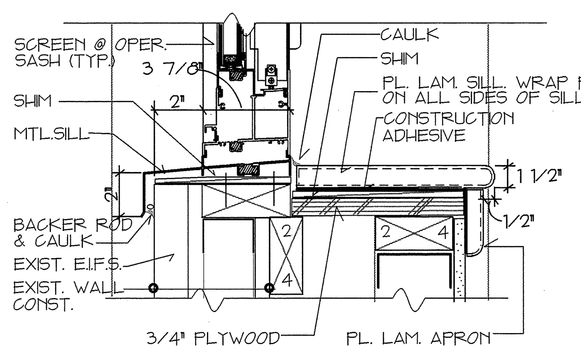

1 SILL DTL. @ 2ND TO 5TH FLOOR
A-13 SCALE: 3" = 1'-0"

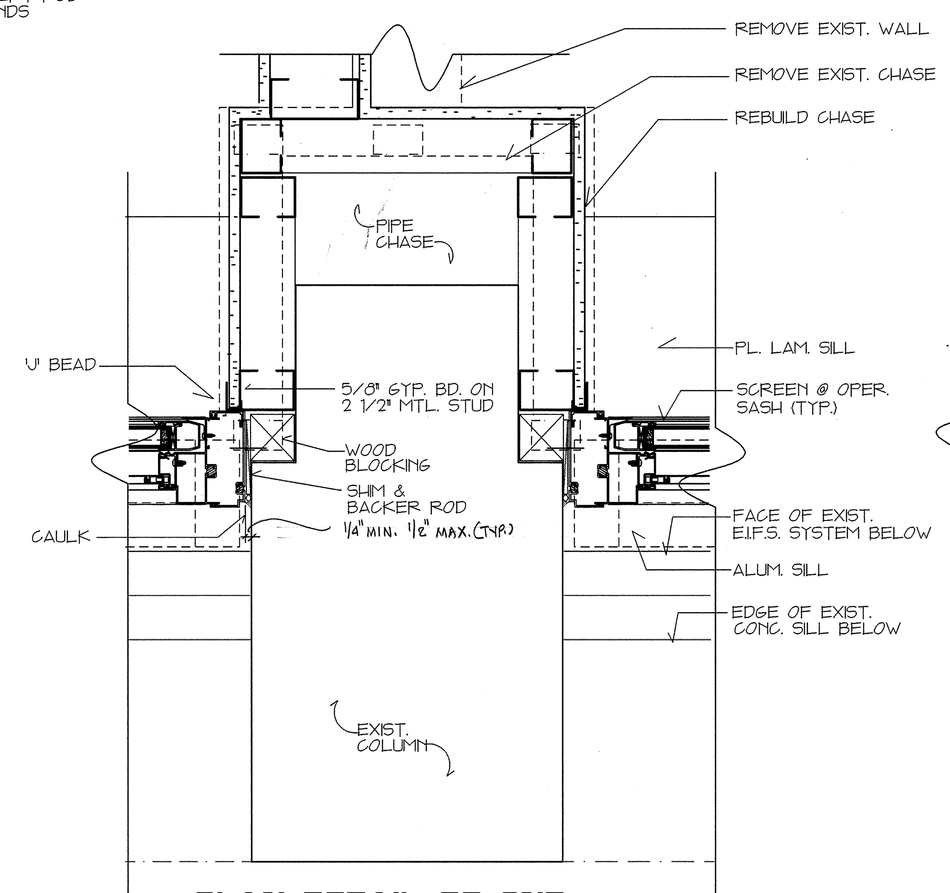

9 PLAN DETAIL OF 2ND THRU 5TH FLOOR TYP. WINDOW
A-13 SCALE: 3" = 1'-0"

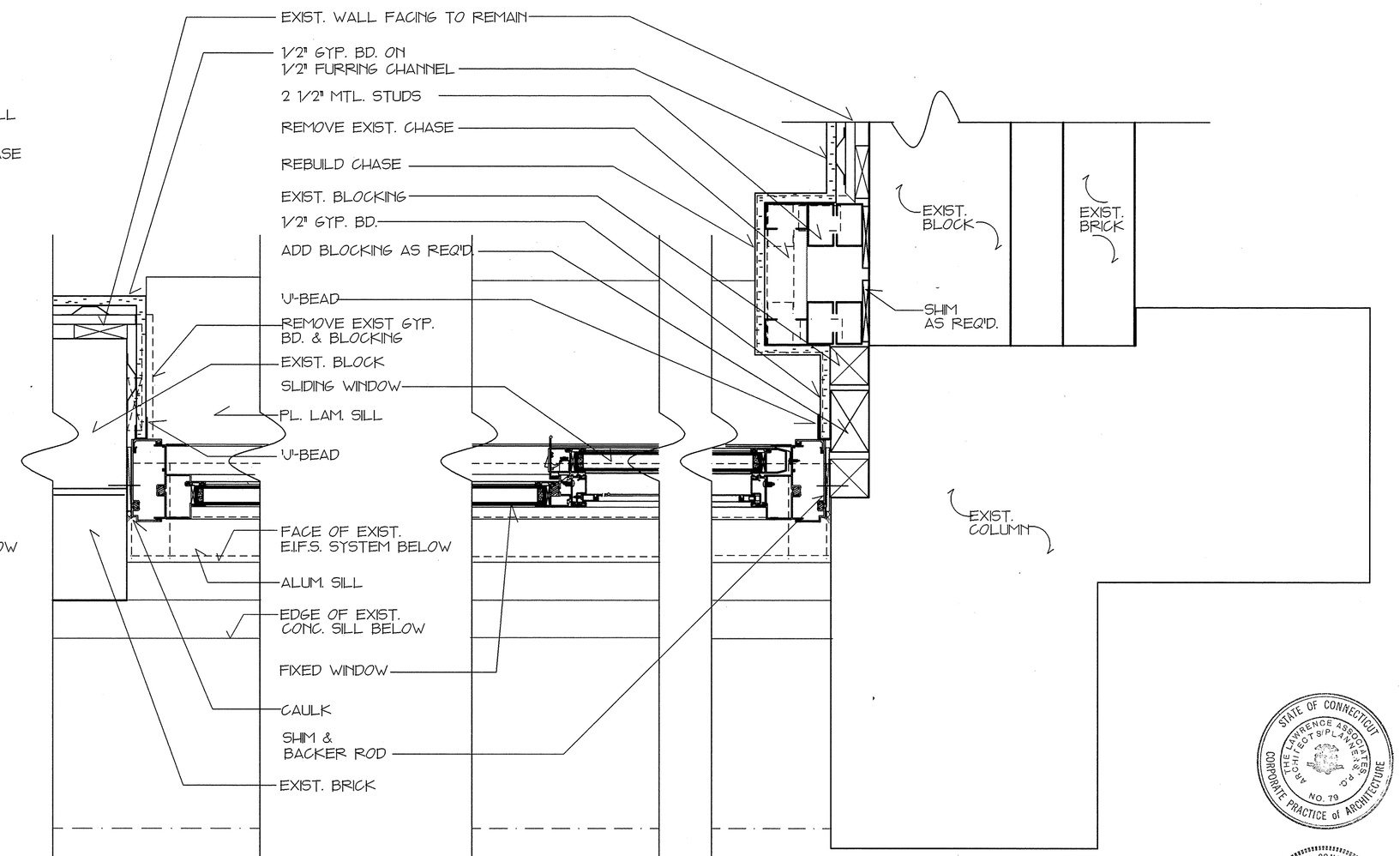

10 PLAN DETAIL OF TYP. CORNER @ 2ND THRU 5TH FLOOR SOUTH WALL
A-13 SCALE: 3" = 1'-0"

0 3" 6" 12"
GRAPHIC SCALE 3"=1'

THE LAWRENCE ASSOCIATES
ARCHITECTS / PLANNERS, P.C.
1075 TOLLAND TURNPIKE, MANCHESTER, CONNECTICUT 06040
(203) 643-2181

NETC DWG NO. 30756-304 NETC SK NO.	DEPARTMENT OF THE NAVY — NAVAL FACILITIES ENGINEERING COMMAND NAVAL EDUCATION AND TRAINING CENTER NEWPORT, RHODE ISLAND
DES. AH DR. RBF BR.	REPAIRS AND ALTERATIONS TO: BUILDING #678
DIR.	
APPROVED / DATE	DWG TITLE: WINDOW DETAILS
SATISFACTORY TO / DATE	SIZE F — CODE IDENT NO. 80091 — NAVFAC DRAWING NO. 2171441
	CONSTR. CONTR. NO. N62472-93-C-1996
SCALE AS SHOWN	SPEC. 93-C-1996 — SHEET A-13 15 OF 44

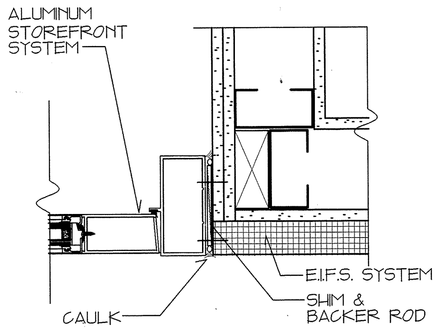

2 A-14 ALUM. DOOR JAMB
SCALE: 3" = 1'-0"

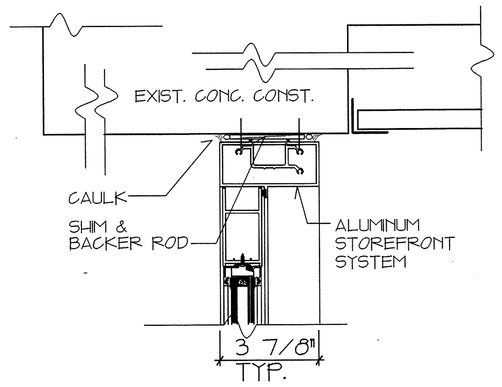

4 A-14 ALUM. DOOR HEAD DTL.
SCALE: 3" = 1'-0"

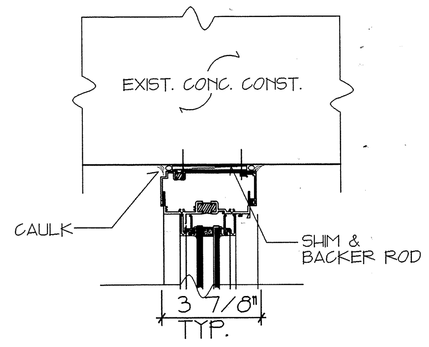

6 A-14 TRANSOM HEAD DTL.
SCALE: 3" = 1'-0"

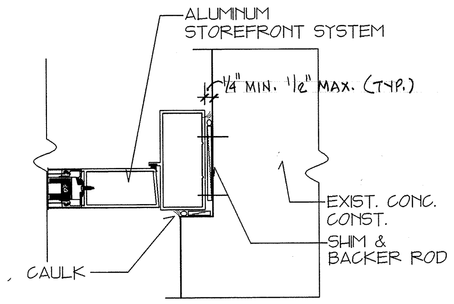

1 A-14 ALUM. DOOR JAMB
SCALE: 3" = 1'-0"

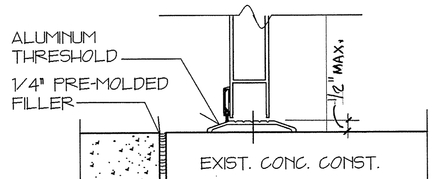

3 A-14 ALUM. DOOR THRESHOLD DTL.
SCALE: 3" = 1'-0"

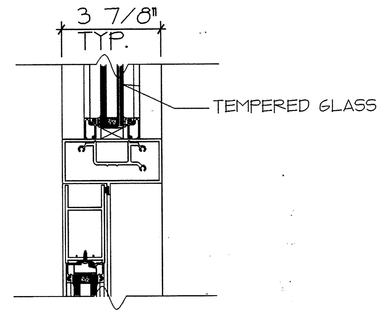

5 A-14 TRANSOM MULLION
SCALE: 3" = 1'-0"

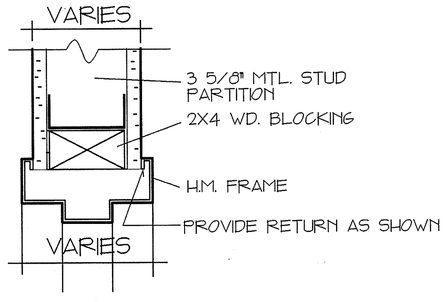

7 A-14 H. M. HEAD/JAMB DTL.
SCALE: 3" = 1'-0"

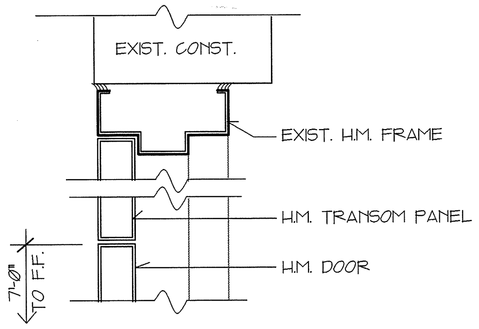

8 A-14 H. M. HEAD W/ TRANSOM PANEL
SCALE: 3" = 1'-0"

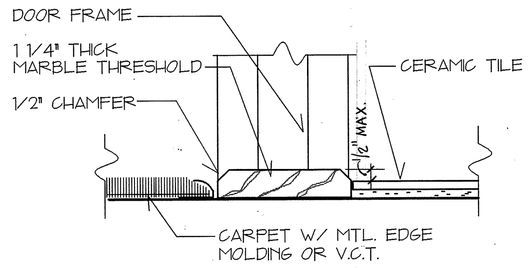

9 A-14 SILL DTL. @ UNIT BATH & H.C. TOILET
SCALE: 3" = 1'-0"

REVISIONS			
SYMBOL	DESCRIPTION	DATE	APPR.

DOOR SCHEDULE

	OPENG	LOCATION ROOM TO ROOM	DOORS TYPE	WIDE	HIGH	THICK	MAT'L	FIN.	FRAMES SIZE	TYPE	HEAD	JAMB	MAT'L	FIN.	DOORS/FRAMES SILL	W'STR.	LABEL	REMARKS
AFT. UNITS	1	CORR. TO UNIT	A	3'-0"	6'-8"	1-3/4"	S.C. WD	STAIN	6 1/0"	1			H.M.	PTD	1	-	45	
	2	TO BEDROOM	A	2'-0"	6'-8"	1-3/4"	S.C. WD	STAIN	5-5/0"	1			H.M.	PTD	-	-	-	
	3A	B.R. TO BATH	A	2'-4"	6'-8"	1-3/4"	S.C. WD	STAIN	5 3/4"	1			H.M.	PTD	3			
	3B	B.R. TO CLOSET	A	2'-4"	6'-8"	1-3/4"	S.C. WD	STAIN	5-5/0"	1			H.M.	PTD	-	-	-	
	4	TO CLOSET	A	3'-0"	6'-8"	1-3/4"	S.C. WD	STAIN	5-5/0"	-			H.M.	PTD	-	-	-	
	5	TO CLOSET	A	PR. 3'0"	6'-8"	1-1/0"	S.C. WD	STAIN	NO	DOOR	FRAME				-	-	-	
	6	TO CLOSET	A	PR. 4'0"	6'-8"	1-1/0"	S.C. WD	STAIN	NO	DOOR	FRAME				-	-	-	
	7	CORR. TO CHASE	A	1'-6"	7'-0"	1 3/4"	MTL.	PTD.	5-7/0"	1			H.M.	PTD			45	-W/ TRANSOM PANEL. DTL. #6/A-14
FIRST FLOOR	111	EXT. TO VEST.	D	PR3'-0"	6'-0"	1-3/4"	ALUM	-	4-1/2"	2			ALUM	-	2	-	-	
	112	EXT. TO STAIR	D	3'-0"	7'-0"	1-3/4"	ALUM	-	4-1/2"	3			ALUM	-	2	-	-	
	113	EXT. TO STAIR	D	3'-0"	7'-0"	1-3/4"	ALUM	-	4-1/2"	3			ALUM	-	2	-	-	
	114	EXT. TO VEST.	D	PR2'-6"	7'-0"	1-3/4"	ALUM	-	4-1/2"	4			ALUM	-	2	-	-	
	115	EXT. TO BSMT.	A	3'-0"	6'-8"	1-3/4"	H.M.	PTD.	EXISTING	TO REMAIN					2	-	-	
	116	VEST. TO LOUNGE	D	PR3'-0"	6'-0"	1-3/4"	ALUM	-	4-1/2"	2			ALUM	-	2	-	-	
	117	LOUNGE TO STAIR	F	3'-0"	7'-0"	1-3/4"	H.M.	PTD	EXISTING	TO REMAIN					1	-	90	EXIST. H.M. ASSUMED TO BE 90 MIN. -W/ TRANSOM PANEL. DTL. #6/A-14
	118	CORR. TO MAIL	A	2'-0"	7'-0"	1-3/4"	S.C. WD	STAIN	5 3/0"	1			H.M.	PTD	1	-	-	
	119	CORR. TO H.C.	A	3'-0"	7'-0"	1-3/4"	S.C. WD	STAIN	6 1/2"	1			H.M.	PTD	3			
	120	CORR. TO H.C.	A	3'-0"	7'-0"	1-3/4"	S.C. WD	STAIN	6 1/2"	1			H.M.	PTD	3			
	121	CORR. TO MECH.	A	3'-0"	7'-0"	1-3/4"	S.C. WD	STAIN	5 1/4"	1			H.M.	PTD	1	-	-	
	122	CORR. TO OFFICE	G	3'-0"	7'-0"	1-3/4"	S.C. WD	STAIN	5-5/0"	1			H.M.	PTD	1	-	-	
	123	CORR. TO MECH.	A	4'-0"	7'-0"	1-3/4"	H.M.	PTD	6 1/2"	1			H.M.	PTD	1	-	45	
	124	CORR. TO JAN.	A	2'-6"	7'-0"	1-3/4"	S.C. WD	STAIN	EXISTING	TO REMAIN					1	-	45	EXIST. H.M. ASSUMED TO BE 45 MIN.
	125	CORR. TO LAUNDRY	A	3'-0"	7'-0"	1-3/4"	H.M.	PTD	EXISTING	TO REMAIN					1	-	45	EXIST. H.M. ASSUMED TO BE 45 MIN.
	126	CORR. TO STAIR	F	3'-0"	7'-0"	1-3/4"	H.M.	PTD	EXISTING	TO REMAIN					1	-	90	EXIST. H.M. ASSUMED TO BE 90 MIN. -W/ TRANSOM PANEL. DTL. #6/A-14
	127	CORR. TO CLOS.	A	2'-6"	7'-0"	1-3/4"	S.C. WD	STAIN	6 1/0"	1			H.M.	PTD	1	-	-	
2ND TO 5TH FLOOR	210 310 410 510	CORR. TO STOR.	A	3'-0"	7'-0"	1-3/4"	S.C. WD	STAIN	EXISTING	TO REMAIN					1	-	45	EXIST. H.M. ASSUMED TO BE 45 MIN.
	211 311 411 511	CORR. TO STAIR	F	3'-0"	7'-0"	1-3/4"	H.M.	PTD	EXISTING	TO REMAIN					1	-	90	EXIST. H.M. ASSUMED TO BE 90 MIN.
	212 312 412 512	CORR. TO LINEN	A	3'-0"	7'-0"	1-3/4"	S.C. WD	STAIN	EXISTING	TO REMAIN					1	-	45	EXIST. H.M. ASSUMED TO BE 45 MIN.
	213 313 413 513	CORR. TO STAIR	F	3'-0"	7'-0"	1-3/4"	H.M.	PTD	EXISTING	TO REMAIN					1	-	90	EXIST. H.M. ASSUMED TO BE 90 MIN. -W/ TRANSOM PANEL. DTL. #6/A-14
	214 314 414 514	CORR. TO JAN.	A	2'-6"	7'-0"	1-3/4"	S.C. WD	STAIN	EXISTING	TO REMAIN					1	-	45	EXIST. H.M. ASSUMED TO BE 45 MIN.
	215 315 415 515	CORR. TO LAUNDRY	A	3'-0"	7'-0"	1-3/4"	S.C. WD	STAIN	EXISTING	TO REMAIN					1	-	45	EXIST. H.M. ASSUMED TO BE 45 MIN.
	216 316 416 516	CORR. TO CLOS.	A	1'-6"	7'-0"	1-3/4"	S.C. WD	STAIN	5 5/0"	1			H.M.	PTD	1	-	-	

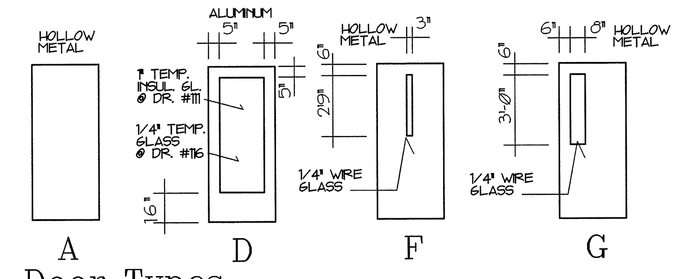

Door Types

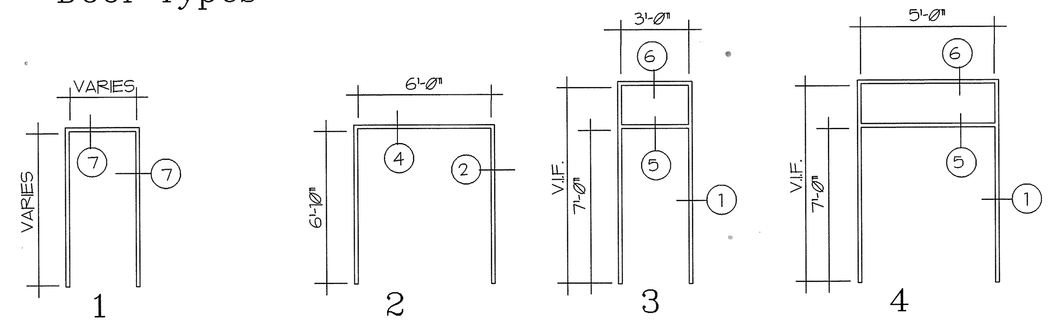

HOLLOW METAL

ALUMINUM

Frame Types

0 3" 6" 12"
GRAPHIC SCALE 3"=1'

0 2' 4' 8' 16'
GRAPHIC SCALE 1/4"=1'

THE LAWRENCE ASSOCIATES
ARCHITECTS / PLANNERS, P.C.
1075 TOLLAND TURNPIKE, MANCHESTER, CONNECTICUT 06040
(203) 643-2161

NETC DWG NO. / NETC SK NO. 30757-304	DEPARTMENT OF THE NAVY — NAVAL FACILITIES ENGINEERING COMMAND NAVAL EDUCATION AND TRAINING CENTER NEWPORT, RHODE ISLAND	
DES. AH DR. RBF BR. DIR.	REPAIRS AND ALTERATIONS TO: BUILDING #678	
APPROVED / DATE	DWG TITLE: DOOR SCHEDULE AND DETAILS	
SATISFACTORY TO / DATE 11-22-94	SIZE: F / CODE IDENT NO.: 80091	NAVFAC DRAWING NO.: 2171442
	CONSTR. CONTR. NO. N62472-93-C-1996	
	SCALE: AS SHOWN / SPEC. 93-C-1996	SHEET A-14 16 OF 44

NOTE 1. WORKER SHALL PROCEED NAKED INTO SHOWER STILL WEARING RESPIRATOR.

NOTE 2. THIS DRAWING IS SCHEMATIC AND THE CONTRACTOR SHALL SUBMIT PLANS FOR THE DECONTAMINATION ENCLOSURE.

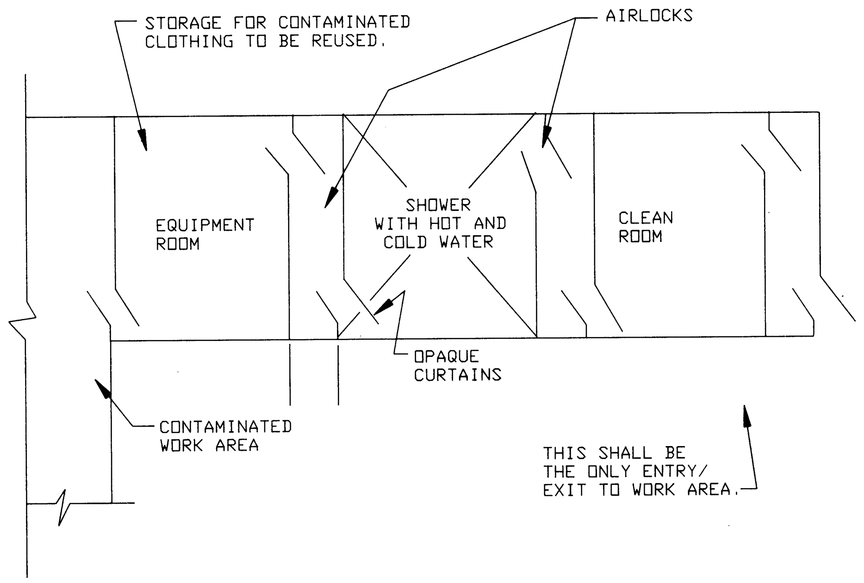

1/1 WORKER DECONTAMINATION ENCLOSURE
(NOT TO SCALE)

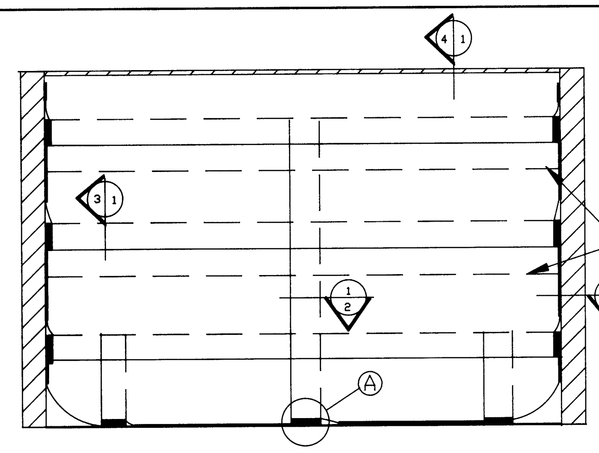

TYPICAL ROOM CROSS SECTION

DETAILS NOT TO SCALE

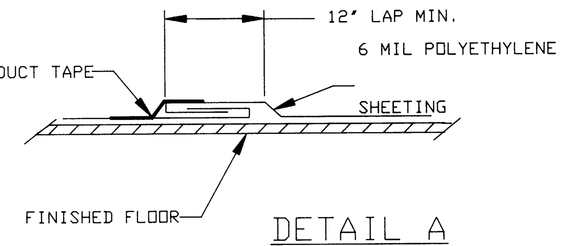

DETAIL A

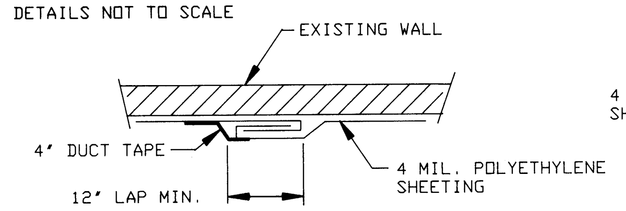

SECTION 1/2
TYP. VERTICAL LAP

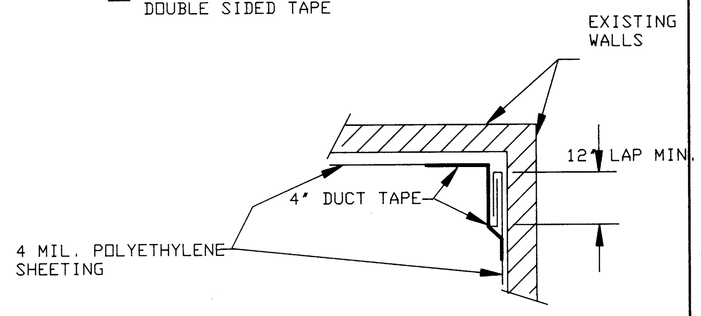

SECTION 1/1
TYPICAL CORNER

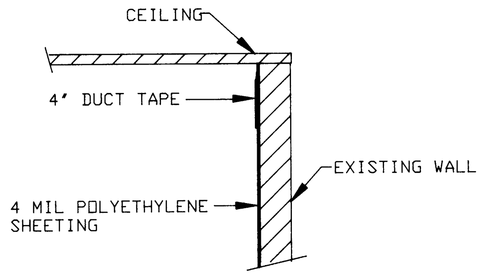

SECTION 4/1
TYP. HEAD DETAIL

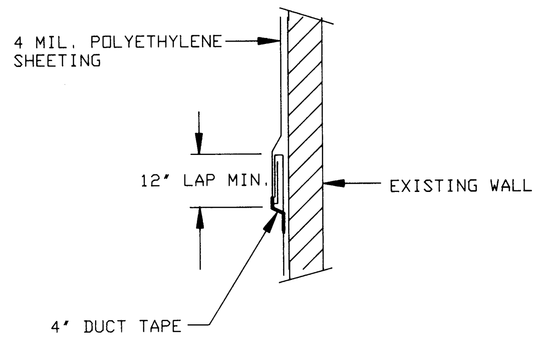

SECTION 3/1
TYP. HORIZONTAL LAP

3/1 DETAILS - WORK AREA PROTECTION
(NOT TO SCALE)

NOTE 1. WORKER IN CONTAMINATED AREA SHALL WASH ACM CONTAINING BAGS IN WASH ROOM, (CONTAMINATED WATER SHALL BE FILTERED BEFORE BEING DISCHARGED INTO DRAINS), THEN REACH INTO AIRLOCK AND PLACE CLEANED BAG INTO SECOND BAG HELD BY WORKER IN HOLDING AREA. WORKER IN HOLDING AREA MUST WEAR RESPIRATOR PROTECTION AND PROTECTIVE CLOTHING. NEITHER WORKER MAY ENTER AIRLOCK.

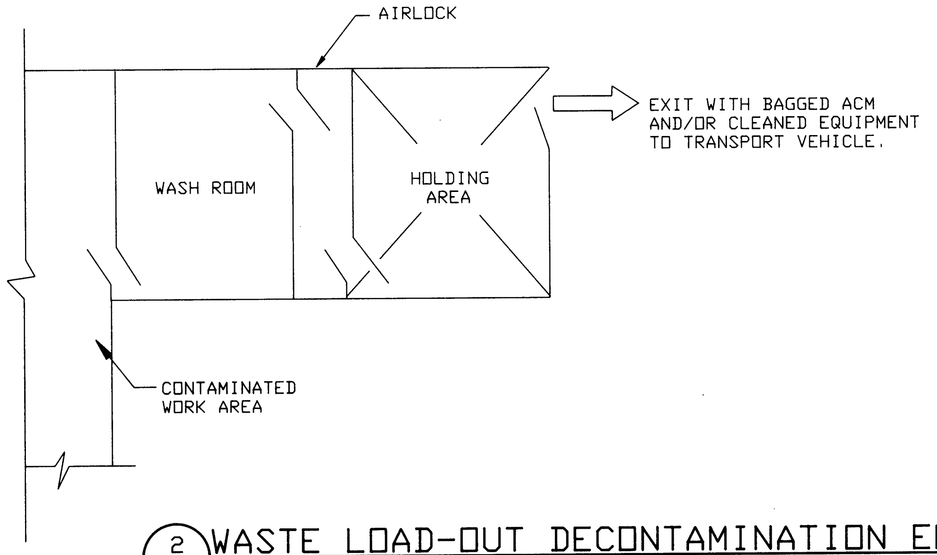

2/1 WASTE LOAD-OUT DECONTAMINATION ENCLOSURE
NOT TO SCALE

NEGATIVE AIR PRESSURE DEVICES SHALL BE PROVIDED WITHIN EACH WORK AREA TO PROVIDE A MINIMUM OF 0.08" WATER NEGATIVE PRESSURE MEASURED ACROSS THE CONTAINMENT SYSTEM AND A MINIMUM OF 8 AIR CHANGES PER HOUR. REQUIREMENTS SHALL BE COMPUTED AS FOLLOWS:

$$CFM = \frac{\text{FLOOR AREA} \times \text{HEIGHT} \times 8}{60}$$

CFM SHALL BE ACTUAL CFM, NOT MACHINE NAMEPLATE CFM. EXCESSIVE NEGATIVE PRESSURE (GREATER THAN 0.15" WATER) MAY BE RELIEVED USING A MAKE-UP AIR DUCT WITH ADJUSTABLE DAMPER. CONTAINMENT SYSTEMS SHALL BE FABRICATED TO WITHSTAND 0.20" DIFFERENTIAL PRESSURE. DISCHARGE CFM AND NEGATIVE AIR PRESSURE VALVES SHALL BE VERIFIED BY AIR SAMPLING PROFESSIONAL BEFORE WORK BEGINS.

ASBESTOS ABATEMENT SYMBOL TABLE

SYMBOL	DESCRIPTION	SYMBOL	DESCRIPTION
a	FIXED BARRIER CONSTRUCTED OF PLYWOOD SHEETING OVER WOOD FRAME AND 6 MIL PLASTIC USED TO SEAL OFF LARGE OPENINGS SUCH AS CORRIDORS WHERE THERE IS NO DOOR. EMERGENCY EGRESS DOOR MAY BE REQUIRED. FOR DOORWAYS, DOOR MUST BE LOCKED TO GENERAL PUBLIC, COVERED BY PLASTIC TAPED TO DOORFRAME. IF DESIGNATED EMERGENCY EGRESS POINT, ENSURE PANIC BAR IS OPERATIONAL AT ALL TIMES.		ASBESTOS CONTAMINATED AND ASBESTOS CONTAINING FLOOR TILE AND MASTIC
		EX	AIR FILTRATION DEVICE (SEE SPECIFICATION FOR APPLICATION GUIDELINES.)
			ASBESTOS CONTAINING TEXTURED CEILING PLASTER
		#3	SAMPLE LOCATIONS
b	FIXED DOUBLE LAYER OF PLASTIC USED TO CONTAIN ASBESTOS. NO ACCESS, EMERGENCY EGRESS ONLY.	#3A	SPLIT SAMPLE, SAME LOCATION AS BASE NUMBERED SAMPLE
	FLUORESCENT LIGHT FIXTURES		PLASTIC CONTAINMENT BARRIER, TYPE INDICATED BY LETTER CODE
	AREAS TO BE CONTAINED TO CONNECT ISOLATED ABATEMENT AREAS.		

REVISIONS

SYM	ZONE	DESCRIPTION	DATE	APPR.

ASBESTOS SAMPLE RESULTS

SAMPLE #	TYPE OF MATERIAL	LOCATION OF MATERIAL	ASBESTOS CONTENT
9413-01	FL TL & MAS	5TH FLOOR STAIR LANDING	< 1%
9413-02	FL TL & MAS	1ST FLOOR MAIN DESK	10%
9413-03	FL TL & MAS	ROOM 110	10%
9413-04	FL TL & MAS	ELEVATOR	< 1%
9413-05	PIPE ELBOW	5TH FLOOR LAUNDRY ROOM	< 1%
9413-06	PIPE ELBOW	5TH FLOOR STAIR LANDING	< 1%
9413-07	CEIL PLASTER	CORRIDOR OUTSIDE ROOM 110	15%
9413-08	CEIL PLASTER	3RD FLOOR LAUNDRY	15%
9413-09	2 X 4 PANEL	ROOM 110 BATHROOM	< 1%
9413-10	WALL PLASTER	ROOM 110 SOUTH WALL	< 1%
9413-A	FLOOR TILE	1ST FLOOR MAIN DESK	2%
9413-11	CEIL PANEL	1ST FLOOR MEN'S BATHROOM	< 1%
9413-12	CEIL PANEL	1ST FLOOR MEN'S BATHROOM	< 1%
9413-13	CEIL PLASTER	1ST FLOOR LOUNGE	< 1%
9413-14	FLOOR TILE	OOD BEDROOM, 1ST FLOOR	< 1%
9413-15	FLOOR TILE	1ST FLOOR MAIN DESK	10%
9413-16	TILE MASTIC	1ST FLOOR MAIN DESK	10%
9413-17	FLOOR TILE	1ST FLOOR ENTRY	< 1%
9413-18	CEIL PLASTER	2ND FLOOR LAUNDRY	< 1%
9413-19	FLOOR TILE	3RD FLOOR LANDING	< 1%
9413-20	FL TL MASTIC	3RD FLOOR LANDING	15%
9413-21	CEIL PLASTER	4TH FLOOR LANDING	< 1%
9413-22	FLOOR TILE	ROOM 402	< 1%
9413-23	FLOOR TILE	ROOM 408	< 1%
9413-24	FLOOR TILE	ELEVATOR	< 1%
9413-25	FL TL MASTIC	ELEVATOR	5%
9413-26	FLOOR TILE	ELEVATOR	2%
9413-27	CEIL PLASTER	1ST FLOOR LOUNGE	3%
9413-27A	CEIL PLASTER	1ST FLOOR LOUNGE	< 1%
9413-27B	CEIL PLASTER	1ST FLOOR LOUNGE	1%-2%
9413-28	CEIL PLASTER	2ND FLOOR CORRIDOR	3%
9413-28A	CEIL PLASTER	2ND FLOOR CORRIDOR	< 1%
9413-28B	CEIL PLASTER	2ND FLOOR CORRIDOR	1%-2%
9413-29	CEIL PLASTER	1ST FLOOR LOUNGE	< 1%
9413-30	CEIL PLASTER	ROOM 112	< 1%
9413-31	CEIL PLASTER	1ST FLOOR CORRIDOR	< 1%
9413-32	CEIL PLASTER	1ST FLOOR TV ROOM	5%
9413-33	CEIL PLASTER	1ST FLOOR CORRIDOR	5%
9413-34	CEIL PLASTER	3RD FLOOR LOUNGE	5%
9413-35	CEIL PLASTER	3RD FLOOR CORRIDOR	5%
9413-36	CEIL PLASTER	2ND FLOOR CORRIDOR	5%
9413-37	ROOF TAR	SOUTH END OF ROOF	< 1%
9413-38	FELT PAPER	CURB, SOUTH ROOF, CENTER	< 1%
9413-39	ROOF TAR	NORTH END OF ROOF	< 1%
9413-40	FELT PAPER	CURB, NORTH ROOF, CENTER	< 1%

STATE OF CONNECTICUT DAVID M. CARTER No. 14118 LICENSED PROFESSIONAL ENGINEER

APPLIED THERMODYNAMICS ASSOCIATES, INC.
CONSULTING ENGINEERS
203-456-4554
10 HIGGINS HIGHWAY - SUITE 10 MANSFIELD CENTER, CT 06250

NETC DWG.NO.	30758 - 304
NETC SK.NO.	
DSGN.	RTS
DR.	JMC
BR.	DRJ
DIR.	
APPROVED	DATE
SATISFACTORY TO	
DATE	11-22-94

DEPARTMENT OF THE NAVY — NAVAL FACILITIES ENGINEERING COMMAND

NAVAL EDUCATION AND TRAINING CENTER
NEWPORT, RI.

REPAIR AND MODIFICATIONS TO:
BUILDING #678

DWG TITLE: HAZARDOUS MATERIALS DETAIL SHEET

SIZE	CODE IDENT NO.	NAVFAC DRAWING NO.
F	80091	2171443
		CONSTR CONTR. NO. N62472-93-C-1996
SCALE: AS SHOWN		SPEC. / SHEET AS1 OF 44

ATA REF: E:\9413\9413AS1 08/10/94 14:07

REVISIONS				
SYM	ZONE	DESCRIPTION	DATE	APPR.

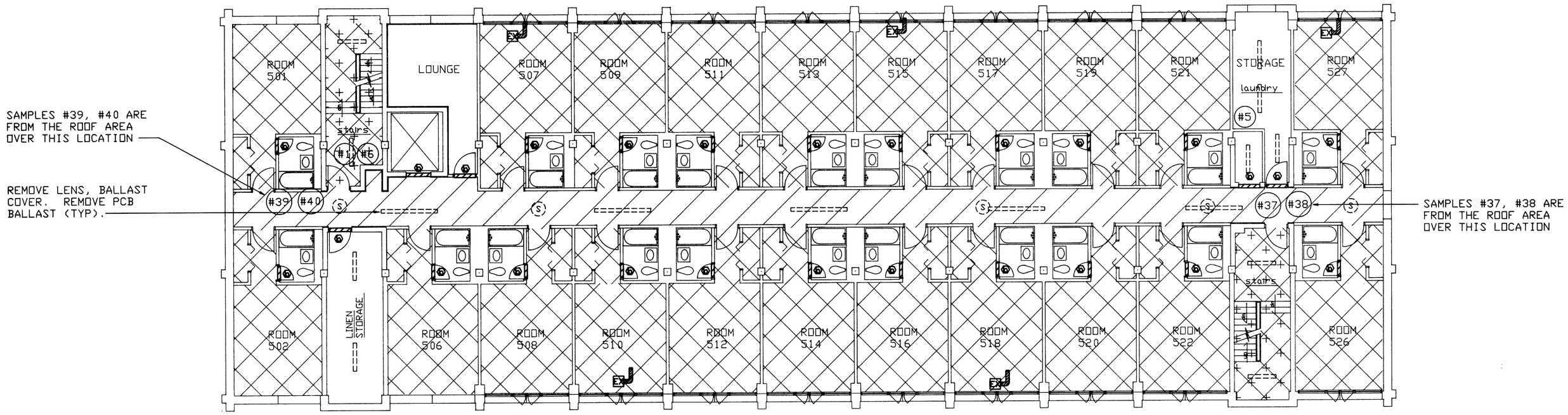

FIFTH FLOOR
SCALE: 1/8" = 1'-0"

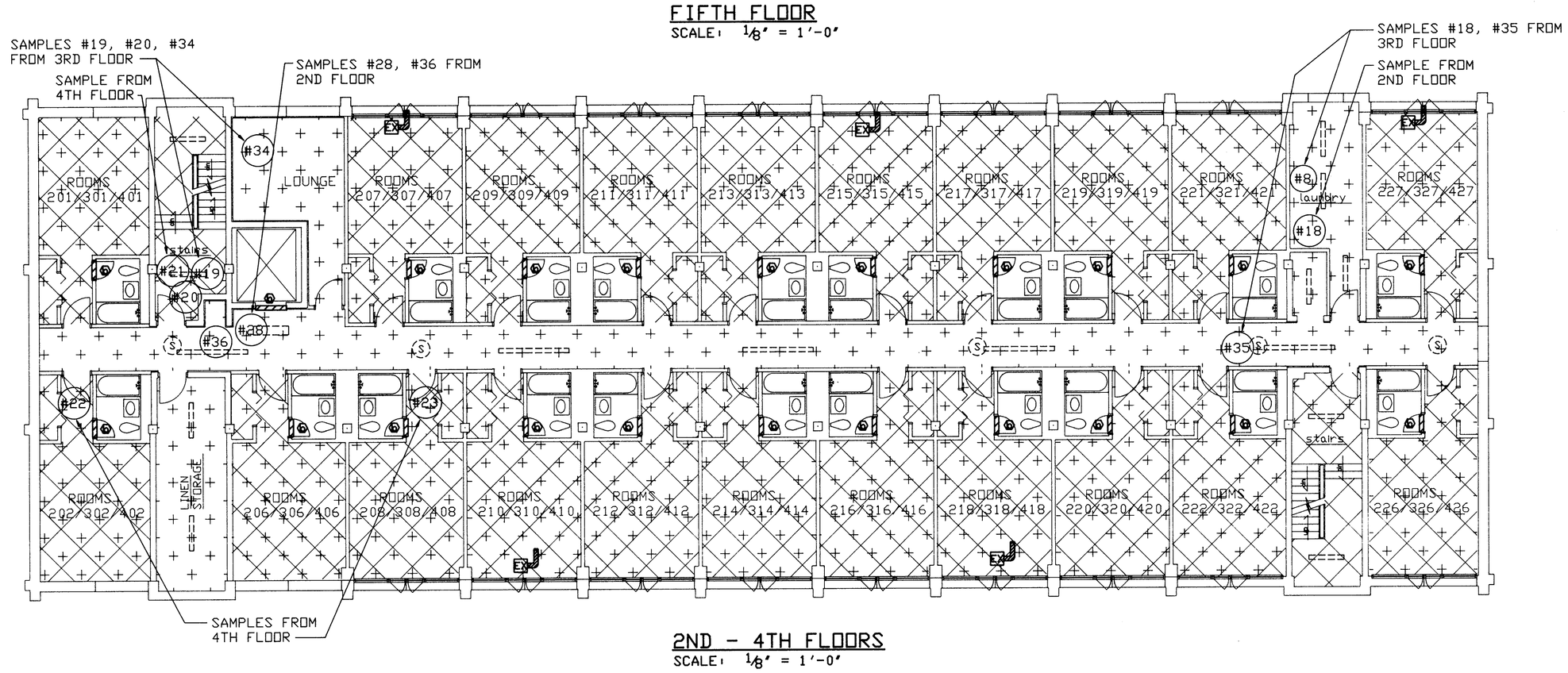

2ND - 4TH FLOORS
SCALE: 1/8" = 1'-0"

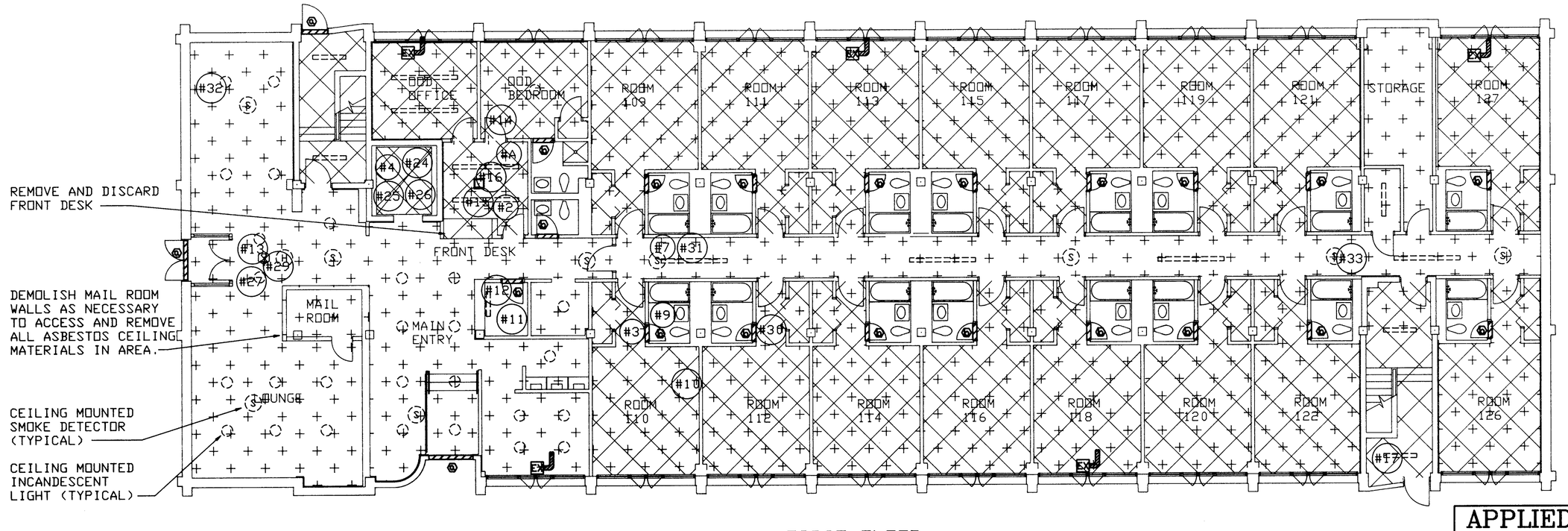

FIRST FLOOR
SCALE: 1/8" = 1'-0"

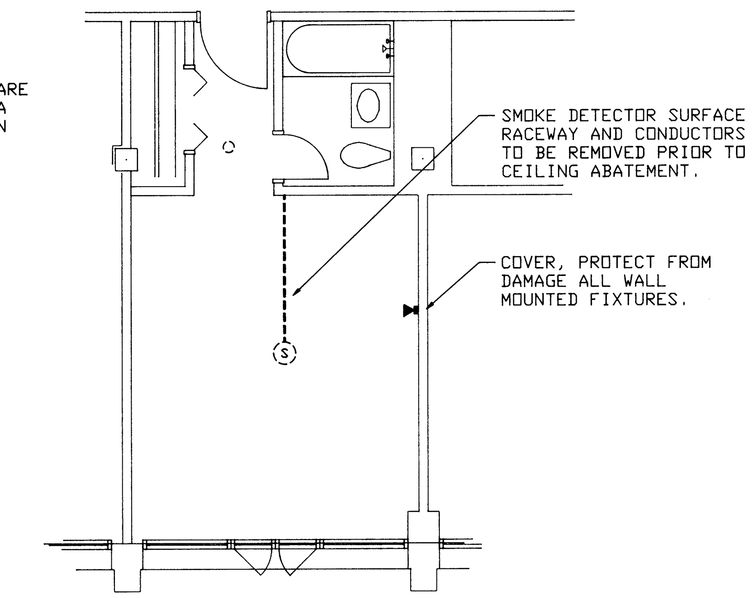

ATA REF: C:\9413\SHELLRM 04/13/94 14:49 (NG 1)

1 / AS2 TYPICAL ROOM PLAN
SCALE: 1/4" = 1'-0"

NOTES

1. TEXTURED CEILING PLASTER IN THE BUILDING TESTED POSITIVE FOR ASBESTOS (SEE SAMPLE LIST, DWG. AS1). THE ABATEMENT OF ALL TEXTURED CEILING PLASTER IN THE BUILDING IS REQUIRED. FLOOR TILES AND MASTIC TESTED POSITIVE FOR ASBESTOS. REMOVE ALL FLOOR TILE, FLOOR TILE MASTIC, FLOOR BASE AND FLOOR BASE ADHESIVES IN CONTAINMENT.

2. DISCONNECT ALL ELECTRICAL CIRCUITS TO ENSURE SAFE WORK AREA CONDITIONS. COORDINATE WITH THE NAVAL FACILITIES ENGINEERING TO SHUT OFF ELECTRICITY AND OTHER UTILITIES AS NECESSARY. REMOVE ALL LIGHT FIXTURE COVERS IN AREAS TO BE ABATED. REMOVE ALL PCB CONTAINING BALLLASTS, STORE IN A 55 GAL. DRUM. ALL BALLASTS IN FLUORESCENT LIGHT FIXTURES ARE ASSUMED TO CONTAIN PCB MATERIALS UNLESS THE BALLAST LABEL SPECIFICALLY STATES THERE ARE NO PCB'S IN IT. DO NOT REMOVE FIXTURES FROM THE CEILING UNTIL FULL CONTAINMENT IS ERECTED. FLUORESCENT FIXTURES LOCATED ON DRAWINGS.

3. ERECT NO MORE THAN FIVE CONTAINMENTS, ONE PER FLOOR, FOR ASBESTOS ABATEMENT. CONSTRUCT THE CONTAINMENT BARRIERS AS SHOWN ON THE DRAWINGS AND AS REQUIRED BY APPROPRIATE SPECIFICATION SECTIONS. COVER ALL FIXTURES TO REMAIN WITH TWO LAYERS 6 MIL PLASTIC. IN AREAS WHERE 2 X 4 CEILING PANELS ARE FOUND (BATHROOMS, ALL OF 5TH FLOOR), ERECT A TOP TO THE CONTAINMENT OF 2 LAYERS 4 MIL PLASTIC BELOW THE CEILING TILES. ESTABLISH NEGATIVE AIR IN THE CONTAINMENT, EXHAUST ALL NEGATIVE AIR MACHINES TO THE OUTSIDE AIR. AFTER THE CONTAINMENT IS INSPECTED BY THE PROJECT COORDINATOR OR AUTHORIZED REPRESENTATIVE, BEGIN ABATEMENT.

4. REMOVE ALL LIGHT FIXTURES FROM CEILINGS TO BE ABATED. REMOVE ALL OTHER CEILING MOUNTED AND FLOOR MOUNTED FIXTURES THAT WILL OBSTRUCT ABATEMENT OF FLOORS AND CEILINGS.

5. REMOVE ALL FLOOR TILE, FLOOR BASE, FLOOR TILE MASTIC AND FLOOR BASE ADHESIVES.

6. CAREFULLY SCRAPE ALL TEXTURED CEILING PLASTER FROM CONCRETE DECK SURFACES. DO NOT DAMAGE THE CONCRETE DECK. WET MISTING OF THE CONTAINMENT IS REQUIRED. SCRAPE ALL PLASTER FROM PIPES, WALLS AND OTHER AREAS WHERE OVERSPRAY OF TEXTURED PLASTER IS FOUND.

7. PLACE ALL ASBESTOS MATERIALS IN BAGS OR CONTAINERS, PROPERLY LABELED PER SPECIFICATION. DISPOSE OF ASBESTOS AND PCB'S AS REQUIRED BY THE SPECIFICATION.

8. NO REWORK IS REQUIRED, EXCEPT TO REPAIR DAMAGES TO THE BUILDING. THE CONTRACTOR SHALL REPAIR ALL DAMAGES TO THE FACILITY TO CONDITIONS EQUAL TO OR BETTER THAN PRIOR TO THE ABATEMENT PROJECT. CONTRACTOR SHALL NOTE ALL PRE-EXISTING DAMAGES TO THE BUILDING PRIOR TO ABATEMENT, AND REPAIR ALL DAMAGES NOT ON THIS LIST AFTER ABATEMENT IS COMPLETE.

J.M. Gall

STATE OF CONNECTICUT · JAMES MICHAEL GALLIGAN · No. 14118 · LICENSED PROFESSIONAL ENGINEER

NORTH

SCALE IN FEET
8 0 8 16

APPLIED THERMODYNAMICS ASSOCIATES, INC.
CONSULTING ENGINEERS
203-456-4554
10 HIGGINS HIGHWAY - SUITE 10 MANSFIELD CENTER, CT 06250

NETC DWG.NO. 30759 - 304	DEPARTMENT OF THE NAVY — NAVAL FACILITIES ENGINEERING COMMAND
NETC SK.NO.	NAVAL EDUCATION AND TRAINING CENTER, NEWPORT, RI.
DSGN. RTS	
DR. JMC	REPAIR AND MODIFICATIONS TO: BUILDING #678
BR. DRJ	
DIR.	
APPROVED / DATE	DWG TITLE: HAZARDOUS MATERIALS ABATEMENT
SATISFACTORY TO / DATE 11-22-94	SIZE F · CODE IDENT NO. 80091 · NAVFAC DRAWING NO. 2171444
	SCALE: AS SHOWN · CONSTR CONTR. NO. N62472-93-C-1996 · SPEC. · SHEET AS2 12 OF 44

ATA REF: E:\9413\9413AS2 08/11/94 08:34

REVISIONS				
SYM	ZONE	DESCRIPTION	DATE	APPR.

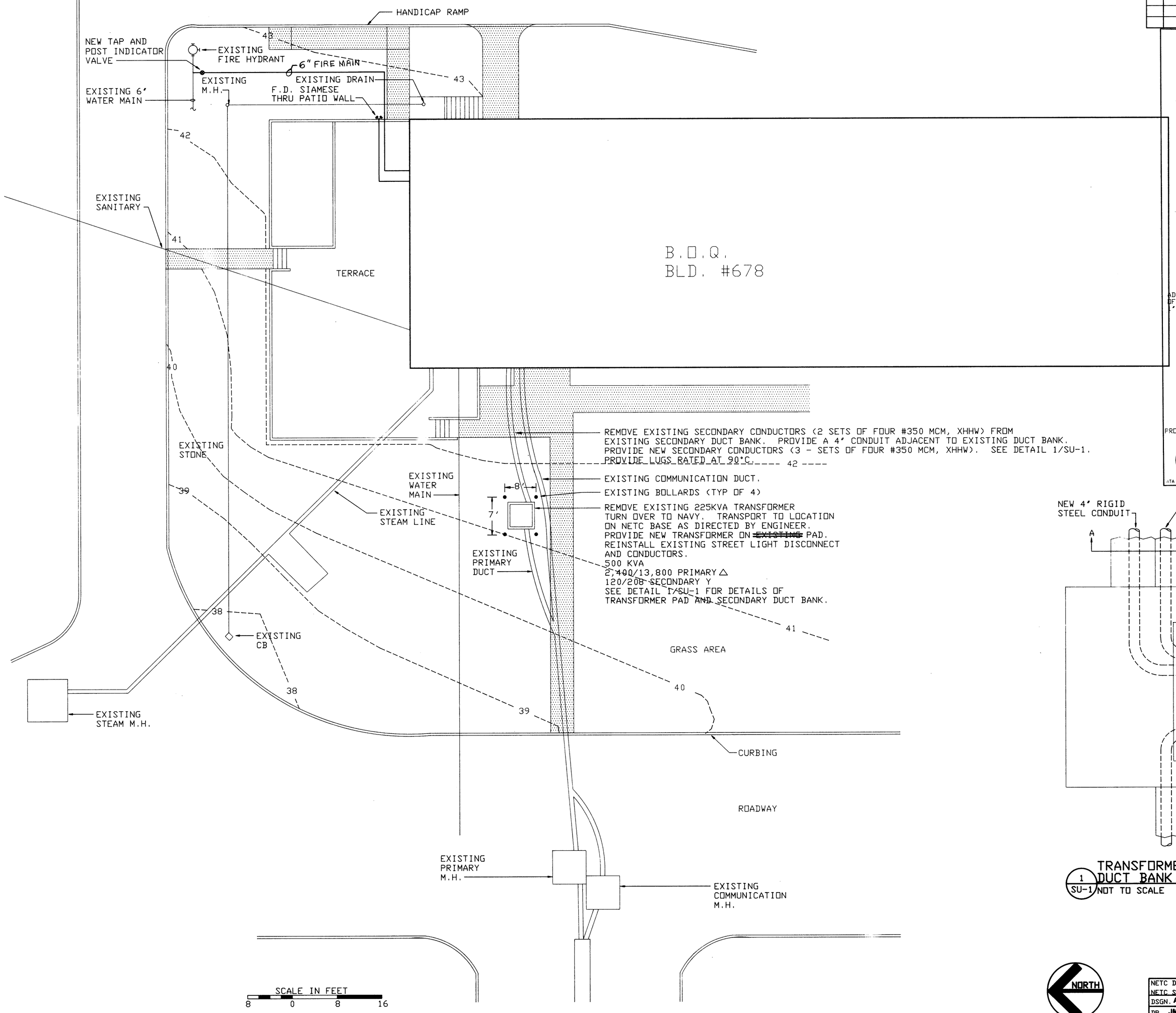

ATA REF: E:\9413\SITE 06/05/94 09:23 (NG 1)

ELECTRICAL SITE PLAN

SCALE: 1' = 10'-0'

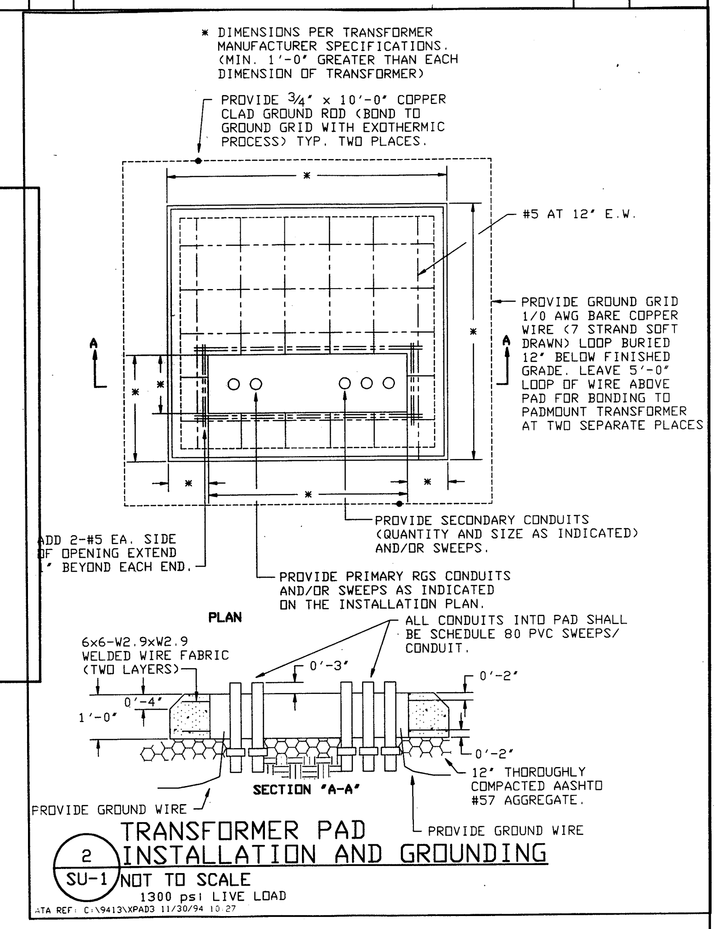

2 / SU-1 TRANSFORMER PAD INSTALLATION AND GROUNDING

NOT TO SCALE

1300 psi LIVE LOAD

ATA REF: C:\9413\XPAD3 11/30/94 10:27

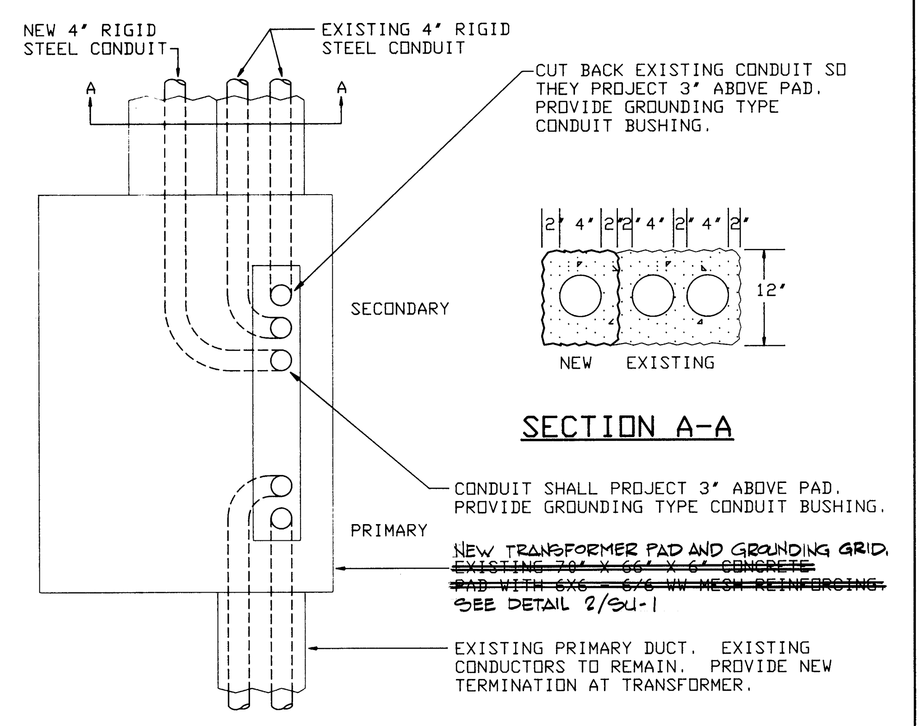

1 / SU-1 TRANSFORMER PAD AND DUCT BANK DETAIL

NOT TO SCALE

DRA

STATE OF CONNECTICUT DAVID R. JACKSON No. 9109 LICENSED PROFESSIONAL ENGINEER

NORTH

NETC DWG.NO. 30760 - 304	DEPARTMENT OF THE NAVY	NAVAL FACILITIES ENGINEERING COMMAND	
NETC SK.NO.	NAVAL EDUCATION AND TRAINING CENTER NEWPORT, RI.		
DSGN. ALP	REPAIR AND MODIFICATIONS TO: BUILDING #678		
DR. JMC			
BR. DRJ			
DIR.			
APPROVED DATE	DWG TITLE ELECTRICAL SITE UTILITIES PLAN		
SATISFACTORY TO	SIZE F	CODE IDENT NO. 80091	NAVFAC DRAWING NO. 2171445
DATE 11-22-94	SCALE: AS SHOWN	SPEC.	CONSTR CONTR. NO. N62472-93-C-1996 SHEET SU-1 19 OF 44

APPLIED THERMODYNAMICS ASSOCIATES, INC.
CONSULTING ENGINEERS
203-456-4554
10 HIGGINS HIGHWAY - SUITE 10 MANSFIELD CENTER, CT 06250

ATA REF: C:\9413\9413SU1 08/11/94 09:59

REVISIONS				
SYM	ZONE	DESCRIPTION	DATE	APPR.

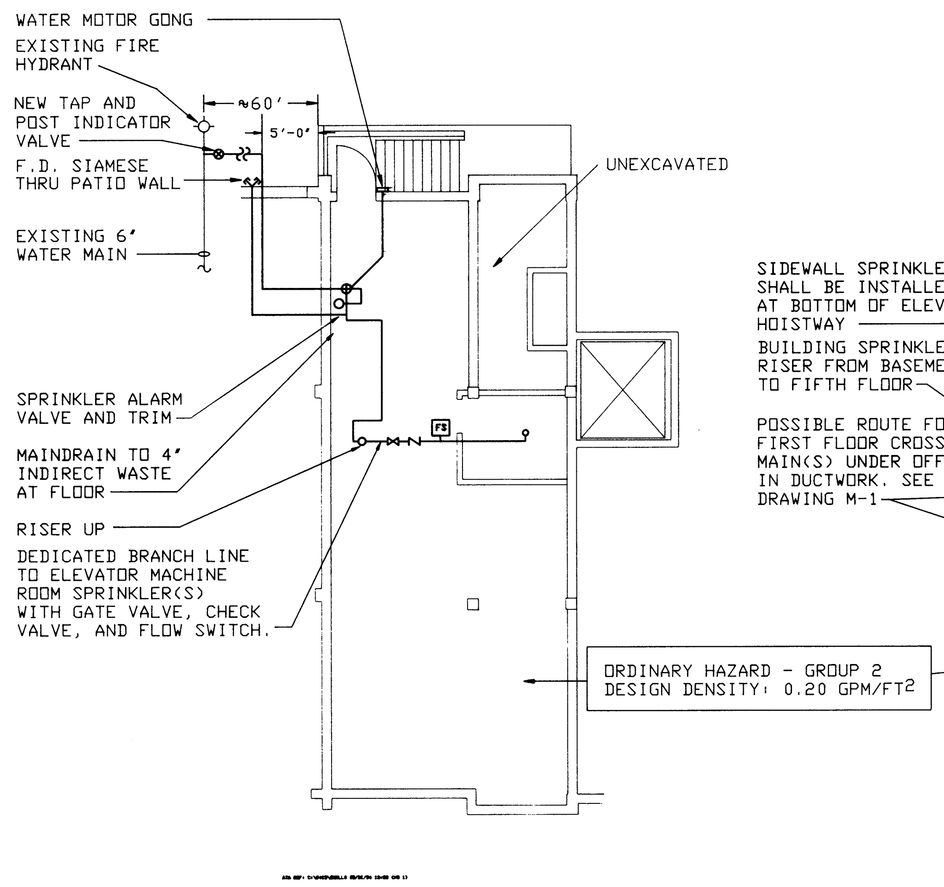

BASEMENT FIRE PROTECTION PLAN

SCALE: 1/8" = 1'-0"

SCALE IN FEET
8 0 8 16

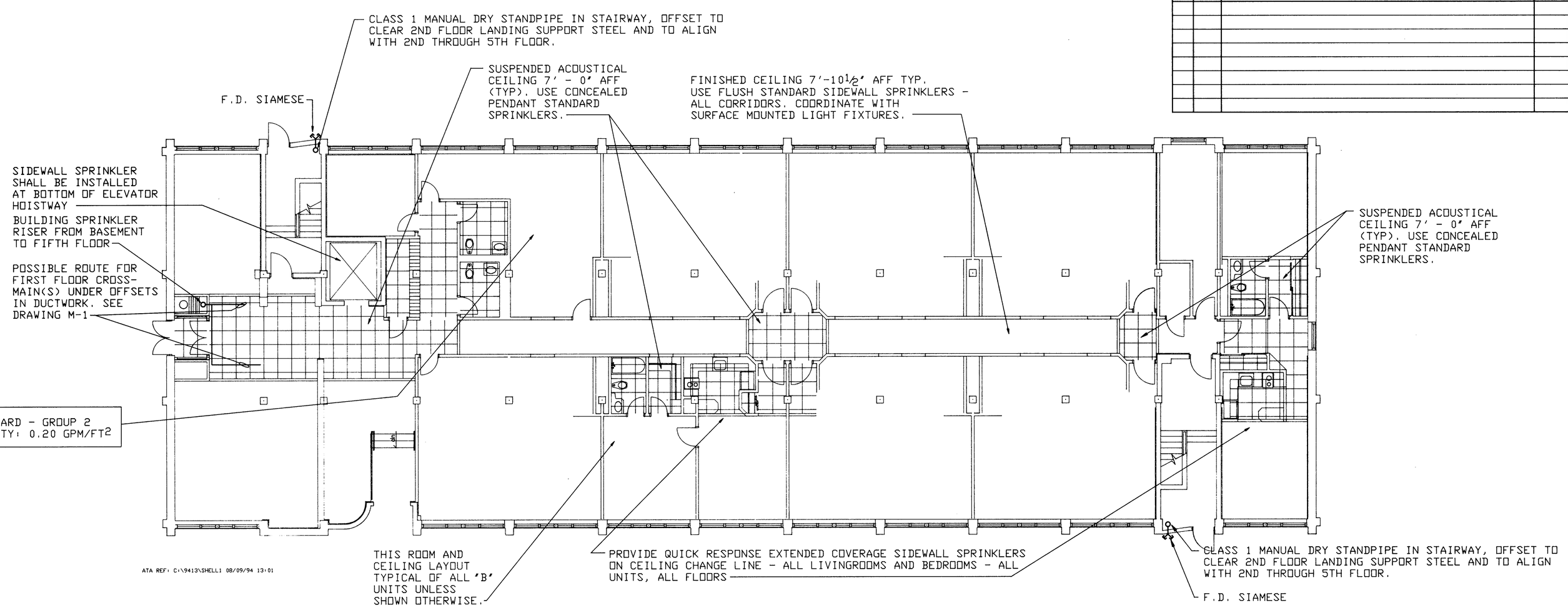

ATA REF: C:\9413\SHELL1 08/09/94 13:01

FIRST FLOOR FIRE PROTECTION PLAN

SCALE: 1/8" = 1'-0"

SCALE IN FEET
8 0 8 16

FLOORS 1,2,3,4,5
LIGHT HAZARD EXCEPT AS NOTED.
DESIGN DENSITY: 0.10 GPM/FT2
NOTE: THE DISTANCE BETWEEN LINES SHALL NOT EXCEED THAT PERMITTED BY NFPA 13 FOR ORDINARY HAZARD OCCUPANCIES. THE DISTANCE BETWEEN SPRINKLERS ON LINES SHALL BE APPROXIMATELY THE SAME AS THE DISTANCE BETWEEN LINES.

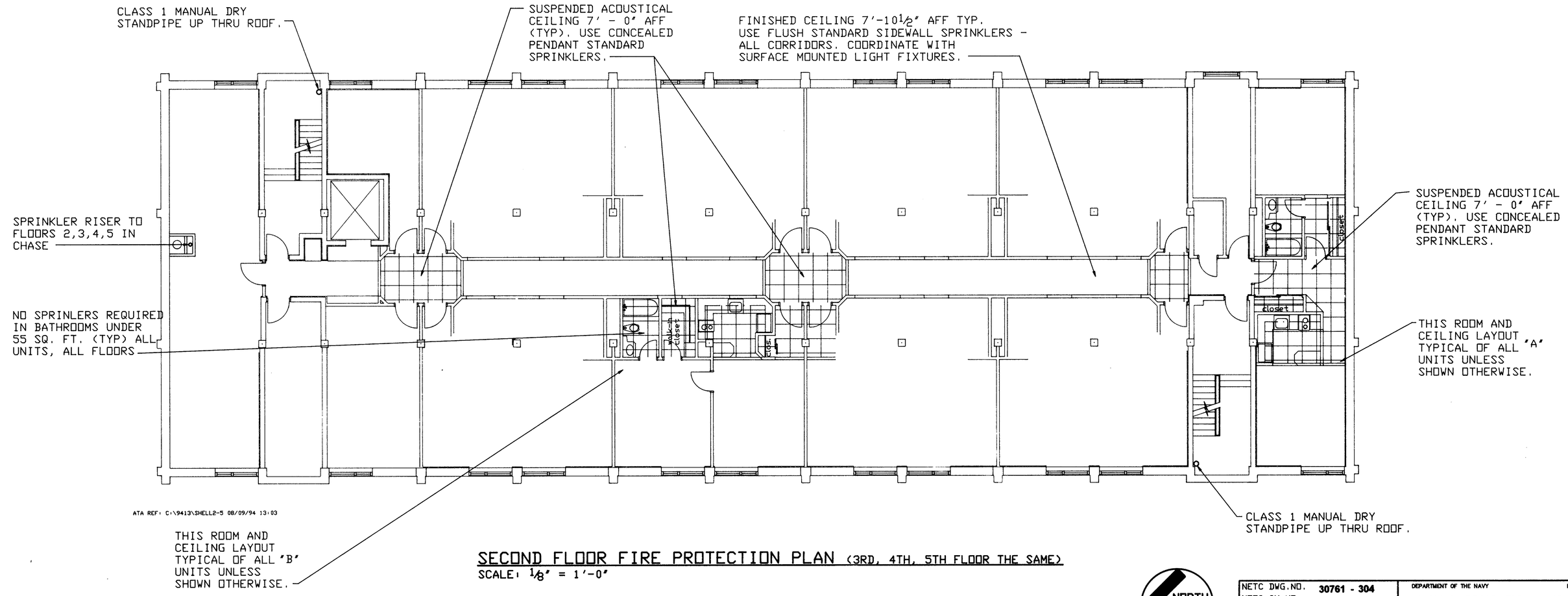

ATA REF: C:\9413\SHELL2-5 08/09/94 13:03

SECOND FLOOR FIRE PROTECTION PLAN (3RD, 4TH, 5TH FLOOR THE SAME)

SCALE: 1/8" = 1'-0"

SCALE IN FEET
8 0 8 16

NORTH

STATE OF CONNECTICUT — DAVID R. FAGNOU — No. 9102 — LICENSED PROFESSIONAL ENGINEER

APPLIED THERMODYNAMICS ASSOCIATES, INC.
CONSULTING ENGINEERS
203-456-4554
10 HIGGINS HIGHWAY - SUITE 10 MANSFIELD CENTER, CT 06250

NETC DWG.NO.	30761 - 304
NETC SK.NO.	
DSGN.	KAH
DR.	KAH
BR.	DRJ
DIR.	
APPROVED	DATE
SATISFACTORY TO	
DATE	11-22-94

DEPARTMENT OF THE NAVY — NAVAL FACILITIES ENGINEERING COMMAND

NAVAL EDUCATION AND TRAINING CENTER
NEWPORT, RI.

REPAIR AND MODIFICATIONS TO:
BUILDING #678

DWG TITLE: FIRE PROTECTION PLAN VIEWS

SIZE	CODE IDENT NO.	NAVFAC DRAWING NO.
F	80091	2171446
		CONSTR CONTR. NO. N62472-93-C-1996
SCALE: AS SHOWN		SPEC.
		SHEET 22 FP-1 OF 44

ATA REF: C:\9413\9413FP1 10/18/94 16:24

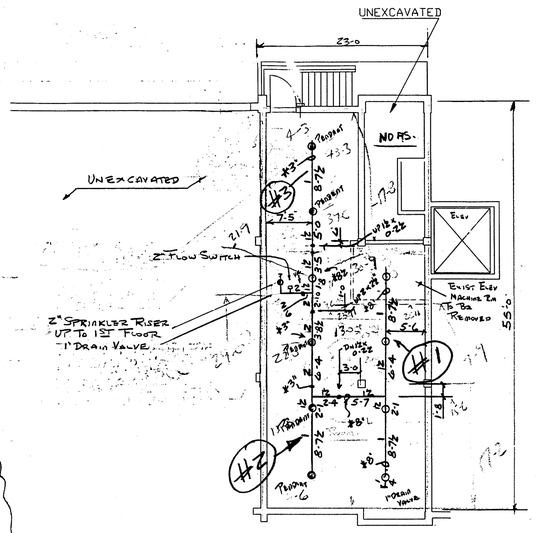

BASEMENT AREA 1/8" = 1'-0 (10)

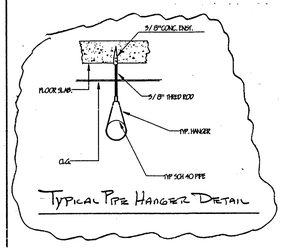

TYPICAL PIPE HANGER DETAIL

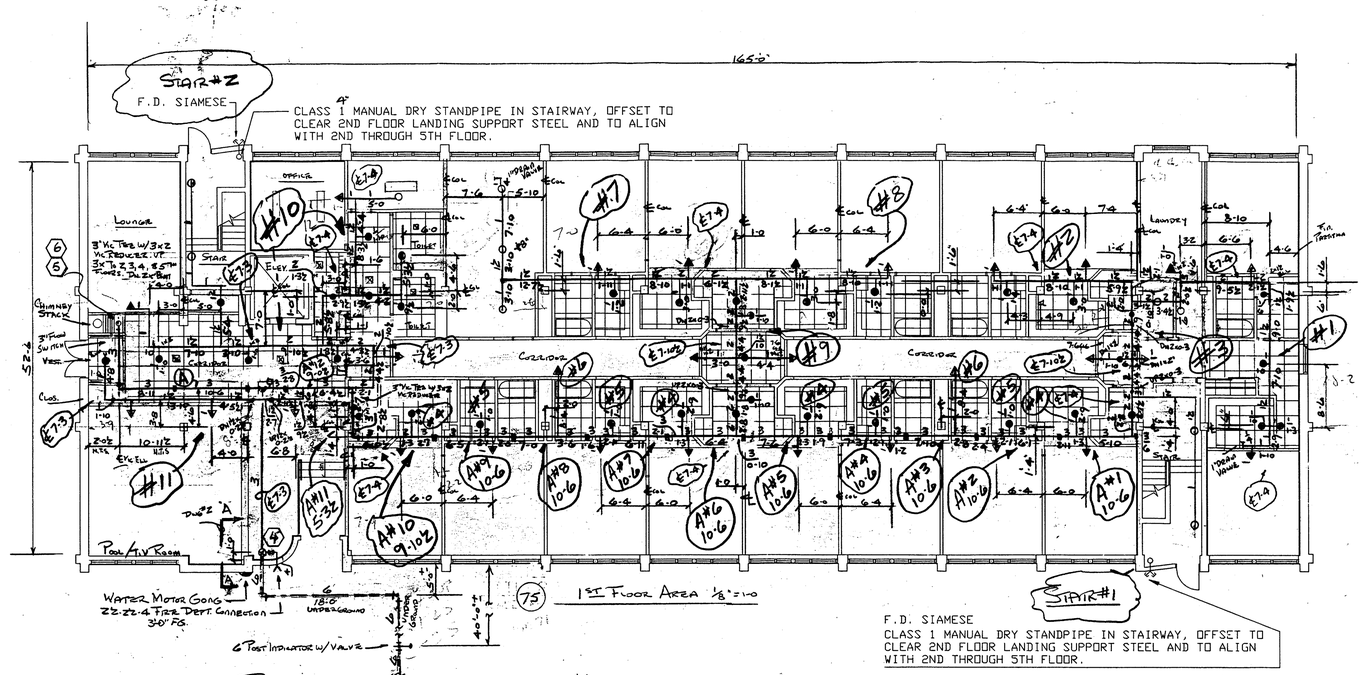

(75) 1ST FLOOR AREA 1/8" = 1'-0

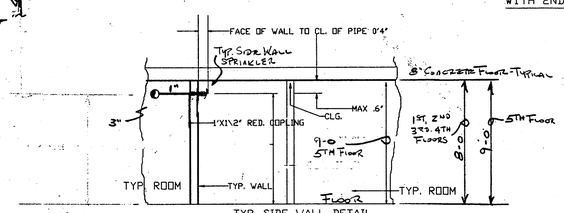

TYP. SIDE WALL DETAIL
No Scale

AS-BUILT DRAWINGS

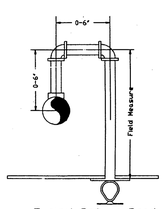

Typical Return Bend
IF REQUIRED

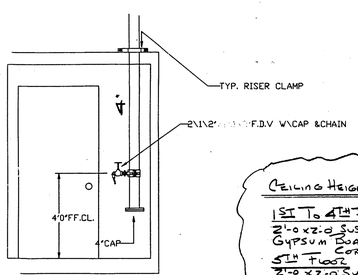

TYP FDV DETAIL

CEILING HEIGHTS ARE AS FOLLOWS

1ST TO 4TH FLOORS:
2'-0 x 2'-0 SUSPENDED CEILINGS - 7'-0"
GYPSUM BOARD CEILINGS - 7'-10½
CORRIDOR TASSAGE 7'-6

5TH FLOOR
2'-0 x 2'-0 SUSPENDED CEILING - 7'-0"
GYPSUM BOARD CEILING 8'-0"
CORRIDOR TASSAGE 7'-6"

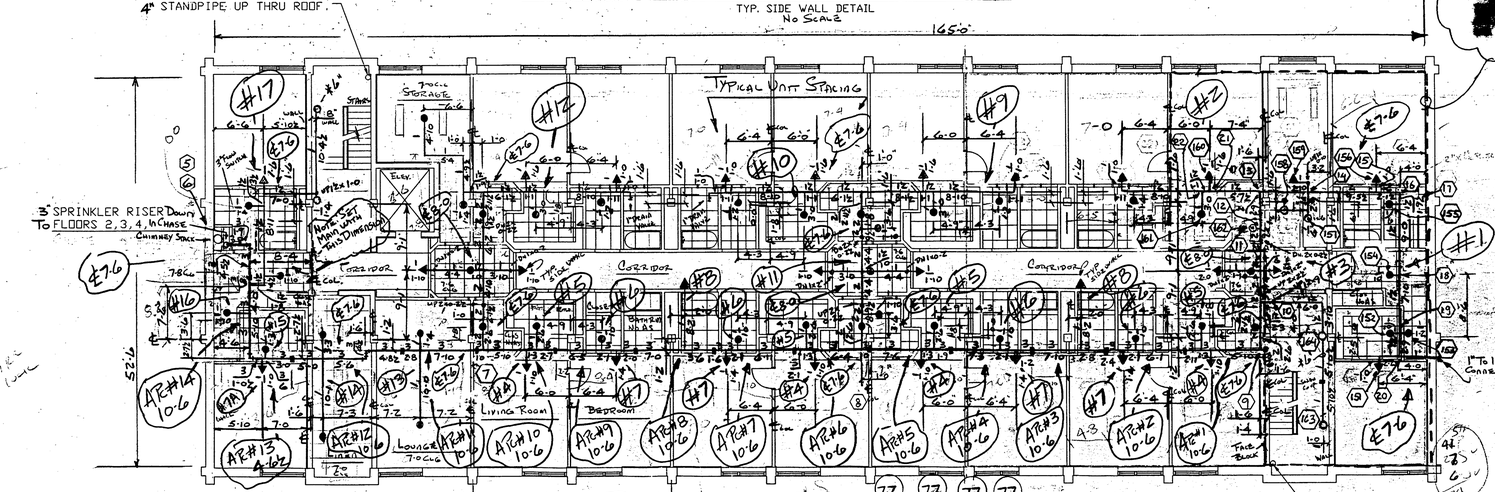

NOTE: TYPICAL UNIT FLOOR PLAN
No Sprinklers Required In Bathrooms Under 55 Square Feet
No Sprinklers Required In Closets Under 24 Square Feet

(77) (77) (77) (77) 2ND (3RD, 4TH, 5TH FLOOR THE SAME)

SCALE 1/8" = 1'-0

AS-BUILT DRAWINGS

SEE DWG #2 FOR NOTES

NETC DWG. NO. 30761A-304

HYDRAULIC DESIGN CRITERIA	SYSTEM DESIGN CRITERIA
DENSITY: .10	1) TYP OF HAZARD: Light Haz.
REMOTE AREA: 1500	2) DEFLECTOR DISTANCE 6" TO 12"
K.FACTOR: 5.6 HEAD SIZE: ½"	3) PIPE SCHEDULE USE Sch 10 Blk 40 Fitt.
HOSE ALLOWANCE: 100	4) SPRINKLER AREA 1500 SQ.FT.
WATER SUPPLY	5) TYP OF CONSTRUCTION Concrete
STATIC: PSI. 90	6) NUMBER OF SPRINKLER CALCULATED 74
RESIDUAL: PSI. 75	7) MAXIMUM SPACING ALLOWED 15' SYSTEM# 1 SYSTEM#
WATER FLOWING: GPM. 1110	8) PIPE SCHEDULE HYDRAULICALLY Sch 40 Ab 10
SIZE OF SUPPLY: 8" CI	9) END SPRINKLER PRESSURE 4.22 FLOW 11.50
DATE OF TEST: 4/9/96 BY: Fire Dept.	10) TOTAL SYSTEM PRESSURE 80.74 FLWO 242.75
	11) LOCATION REF # 3 SYSTEM# SYSTEM#

ELECTRIC FIRE PUMP

HEAD P.S.I	HEAD FEET	PUMP MODEL	MOTOR RPM	MAX.BHP	UL.HP.	FM.HP.	VOLT R.	NO.REF

DIESEL FIRE PUMP

HEAD P.S.I	HEAD FEET	PUMP	MODEL	MOTOR RPM	MAX.BHP	UL.HP.	FM.HP.	VOLT R.	NO.REF

ABBREVIATIONS

CONTRACT RESPONSIBILITIES			
ITEM	F.P.C.	Others	

HANGERS

SYMBOL	DESCRIPTION
	SEE THIS DWG.

NUMBER OF SPRINKLER

TOTAL THIS SHEET: 393 TOTAL THIS JOB: 393

SYMBOL	DEGREE	DESCRIPTION	SIZE	NO REQ
●	165°	Chrome Pendent	½	204
▲	165°	Extended Coverage Quick Response Sidewall	½	145
⊖	165°	Upright	½	44
		Total		393

CITYCO
Fire Protection Engineering
P.O.Box 5840, Providence, RI 02903
Tel. (401) 944-6622
Fax (401) 521-4777

REPAIRS & ALTERATIONS TO BUILDING # 678
NEWPORT RHODE ISLAND
CONTRACT # N62472-93-C-1996

CONTRACT WITH: AFLUSI 39 CLOAK SWAN ROAD, ROOT 5 SMITHFIELD RI.

SYSTEM TYPE	NO.	DATE	REVISIONS
WET	1	7/26/96	ADDED SIDEWALL SPRINKLERS IN CORRIDORS
DRY	2	7/26/96	ADDED UPRIGHT SPRINKLERS IN STAIRWAYS
DELUGE	3	10/17/96	REVISE AS-BUILT DWG. TO REFLECT SAF CHANGES
PREACTION	4	7/1/96	CHANGED UNDER GROUND LOCATION INTO BUILDING

APPROVED BY: FM: ☐ FDP: ■ UL: ☐ ISO: ☐

SCALE: 1/8" = 1'-0
DRAWN BY: TOM
CHECKED BY: MJC
DATE: 5/21/96
TOTAL SPRKS ON JOB: 393
SHEET # 1 OF 2
JOB # 67B100010TIA

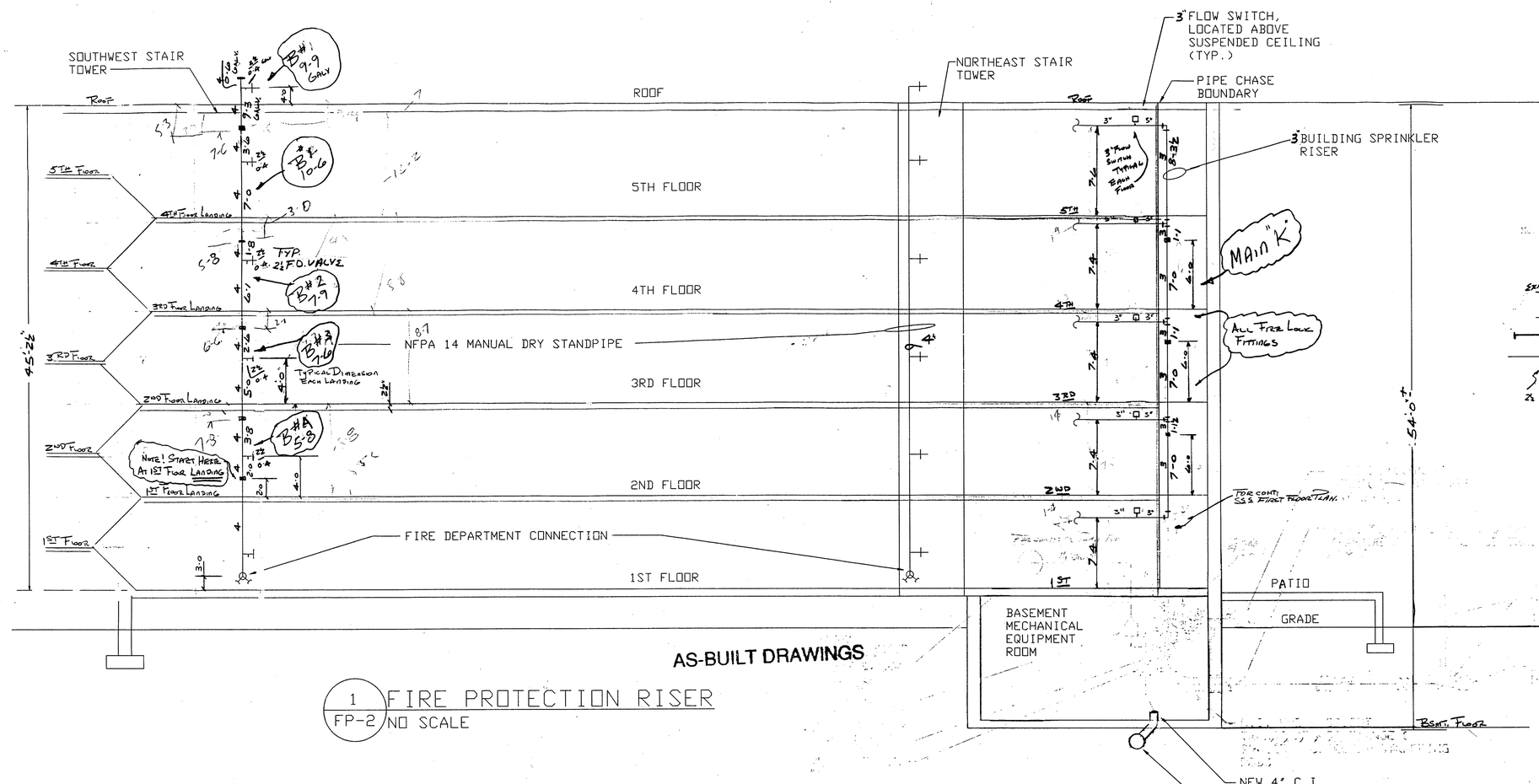

1 / FP-2 FIRE PROTECTION RISER
NO SCALE

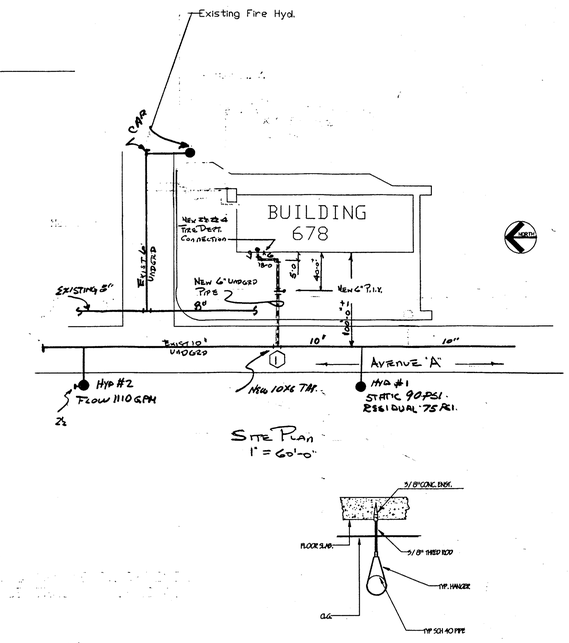

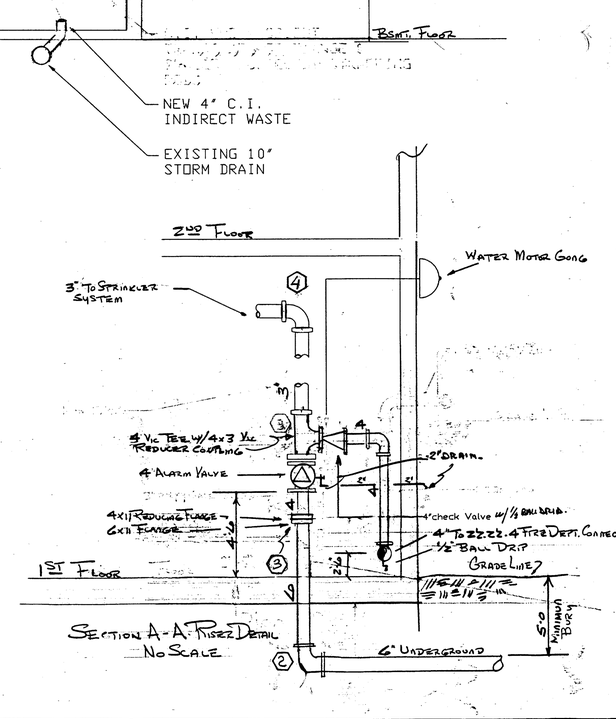

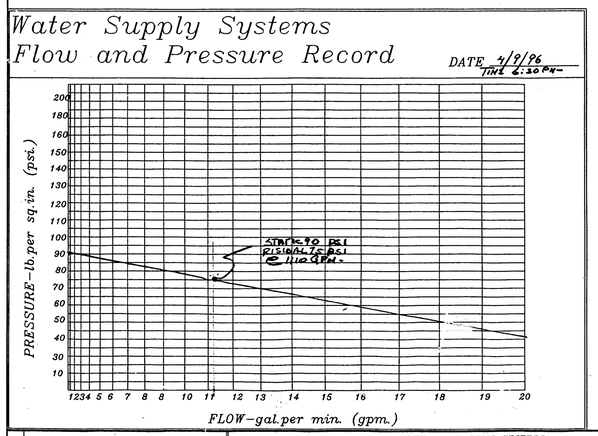

NOTES

* DENOTES DISTANCE FROM DECK TO ℄ PIPE

℄ DENOTE DISTANCE FROM FLOOR TO ℄ PIPE

All pipes 2" and smaller to be Sch. 40 W/screwed fittings.

All pipes 2/1/2" and larger to be Sch.10 W/grooved fittings.

This system is designed, installed and tested in accordance W/NFPA #13, and all state codes.

All the systems have been hydraulically calculated. This symbol denotes a hydraulic ⑤ reference point.

The fire protection system shown on this plan has been designed & is to be installed in accordance with all applicable standards of the national fire codes published by the National Fire Protection Association, latest edition.

All hangars and locations to be in accordance with NFPA pamphlet No. 13.

Unless otherwise noted, high degree temperature sprinkler heads to be installed in accordance with NFPA pamphlet No. 13.

HYDRAULIC DESIGN CRITERIA	SYSTEM DESIGN CRITERIA
DENSITY: .10	1) TYP OF HAZARD light Haz.
REMOTE AREA: 1500	2) DEFLECTOR DISTANCE 4" To 10"
K.FACTOR: 5.6 HEAD SIZE: 1/2"	3) PIPE SCHEDULE USE SCH 40 AH 10 PIPE
HOSE ALLOWANCE: 100	4) SPRINKLER AREA 1500 SQ.F.
WATER SUPPLY	5) TYP OF CONSTRUCTION concrete
STATIC: PSI. 90	6) NUMBER OF SPRINKLER CALCULATED 9
RESIDUAL: PSI. 75	7) MAXIMUM SPACING ALLOWED 15' SYSTEM# 1 SYSTEM#
WATER FLOWING: GPM. 1110	8) PIPE SCHEDULE HYDRAULICALLY SCH 40 & 10
SIZE OF SUPPLY:	9) END SPRINKLER PRESSURE 4.22 PSI
DATE OF TEST: 4/9/96 BY: City Co F.D.S.P.	10) TOTAL SYSTEM PRESSURE 90.14 PSI FLW 242.85 GPM
	11) LOCATION RE #3 SYSTEM# 1 SYSTEM#

ELECTRIC FIRE PUMP

HEAD P.S.I	HEAD FEET	PUMP MODEL	MOTOR RPM	MAX.BHP	UL.HP.	FM.HP.	VOLT R.	NO.REF

DIESEL FIRE PUMP

HEAD P.S.I	HEAD FEET	PUMP	MODEL	MOTOR RPM	MAX.BHP	UL.HP.	FM.HP.	VOLT R.	NO.REF

ABBREVIATIONS

CONTRACT RESPONSIBILITIES			
ITEM	F.P.C.	others	

HANGERS	
SYMBOL	DESCRIPTION
	See detail on sheet 1 of 2

NUMBER OF SPRINKLER

TOTAL THIS SHEET: 0 TOTAL THIS JOB: 393

SYMBOL	DEGREE	DESCRIPTION	SIZE	NO.USED

CITY CO
Fire Protection Engineering
P.O.Box 5840, Providence, RI 02903
Tel. (401) 944-6622
Fax (401) 521-4777

REPAIRS & ALTERATIONS TO BLDG #678
NEWPORT, RHODE ISLAND
CONTRACT # N62472-93-C-1996
AFLUZI 39 SWAN ROAD.
CONTRACT WITH: ROUTS & SMITH FLO. R.I.

SYSTEM TYPE: WET / DRY / DELUGE / PREACTION / APPROVED BY: IRI ☐ ISO ☐ FM ☐ FDP ☐

NO.	DATE	REVISIONS
1	7/16/96	- See Revisions on Dwg #1
2	7/16	Hydr. Calc/Blue Sheet
3	11/14	See Revisions on Dwg #1

NETC DWG. NO. 30761B-304

SCALE:	As Noted
DRAWN BY:	Pitz
CHECKED BY:	RJC
DATE:	4/15/96
TOTAL SPKRS ON JOB:	393
SHEET #	2 of 2
JOB #	678/000 WT.1A

REVISIONS				
SYM	ZONE	DESCRIPTION	DATE	APPR.

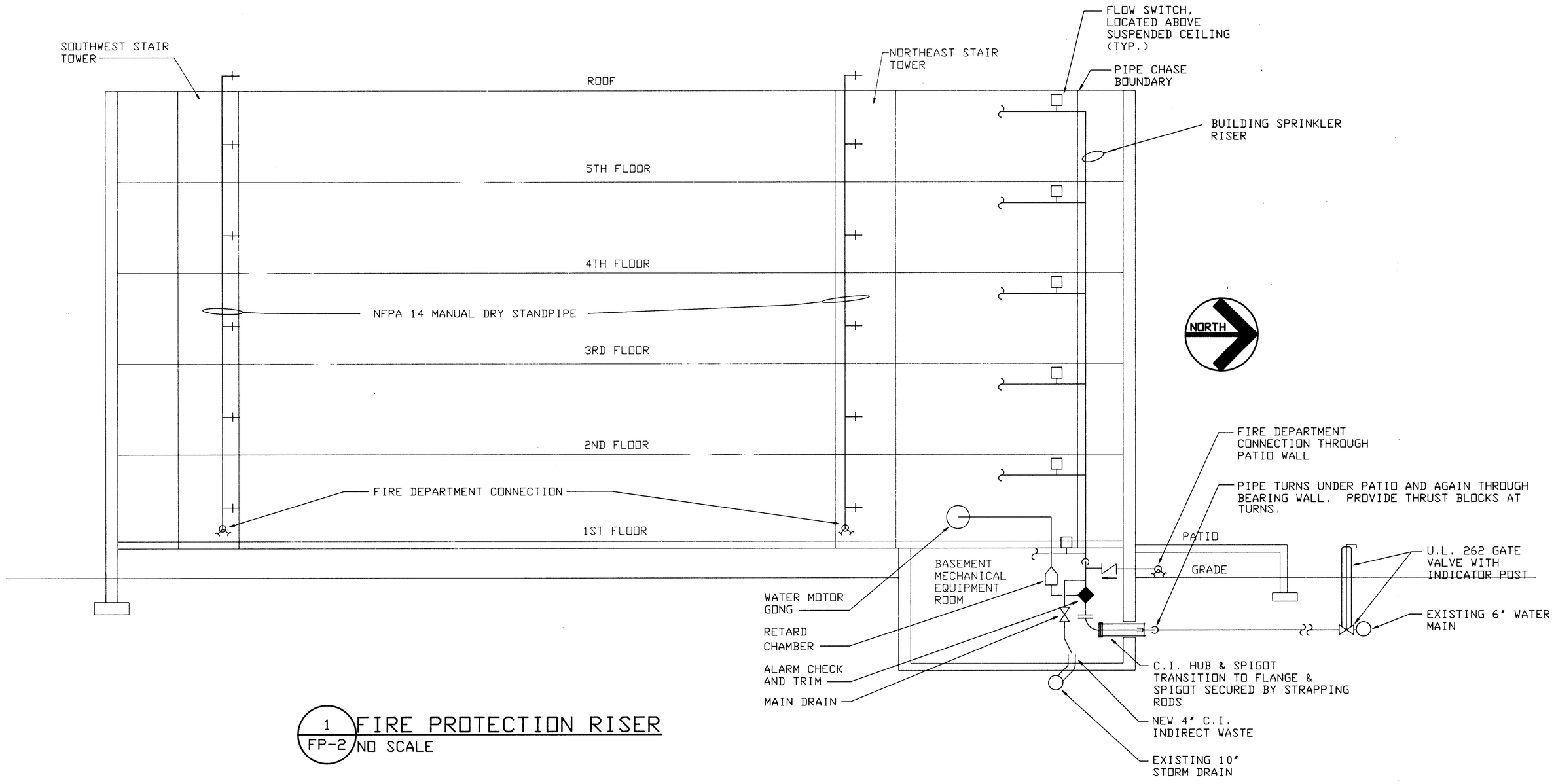

1 / FP-2 FIRE PROTECTION RISER
NO SCALE

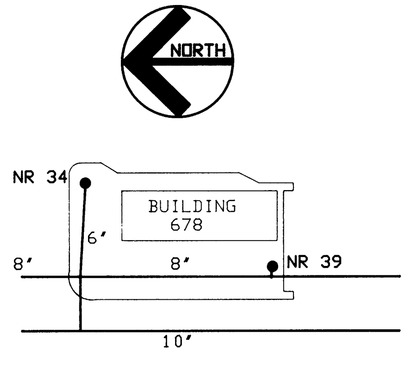

TEST DATA - FIRE PUMPS OFF LINE		
DATE: 4-8-94 TIME: 10:15 AM	TEST #1	TEST #2
PRESSURE HYDRANT	NR 34	NR 39
FLOW HYDRANT	NR 39	NR 34
STATIC PRESSURE	80 PSI	80 PSI
RESIDUAL PRESSURE	36 PSI	25 PSI
FLOW	630 GPM	690 GPM

TEST DATA - FIRE PUMPS ON LINE		
DATE: TBD TIME: TBD	TEST #1	TEST #2
PRESSURE HYDRANT	NR 34	NR 39
FLOW HYDRANT	NR 39	NR 34
STATIC PRESSURE	TBD	TBD
RESIDUAL PRESSURE	TBD	TBD
FLOW	TBD	TBD

TBD = TO BE DETERMINED WHEN NETC FIREPUMP PROJECT IS COMPLETE AND FIREPUMPS CAN BE OPERATED.

2 / FP-2 SITE PLAN AND HYDRANT FLOW TEST DATA
SCALE: 1"=100'

DRJ

STATE OF CONNECTICUT DAVID R. JACKSON No. 9102 LICENSED PROFESSIONAL ENGINEER

APPLIED THERMODYNAMICS ASSOCIATES, INC.
CONSULTING ENGINEERS
203-456-4554
10 HIGGINS HIGHWAY - SUITE 10 MANSFIELD CENTER, CT 06250

NETC DWG.NO. 30762 - 304	DEPARTMENT OF THE NAVY — NAVAL FACILITIES ENGINEERING COMMAND
NETC SK.NO.	NAVAL EDUCATION AND TRAINING CENTER, NEWPORT, RI.
DSGN. DRJ	
DR. DRJ	REPAIR AND MODIFICATIONS TO: BUILDING #678
BR. DRJ	
DIR.	
APPROVED / DATE	DWG TITLE: FIRE PROTECTION RISER AND SCHEDULES
SATISFACTORY TO	SIZE F; CODE IDENT NO. 80091; NAVFAC DRAWING NO. 2171447
DATE 11-22-94	SCALE: AS SHOWN; CONSTR CONTR. NO. N62472-93-C-1996; SPEC.; SHEET FP-2 OF 44

ATA RDF: C:\9413\9413FP2 08/10/94 16:45

REVISIONS				
SYM	ZONE	DESCRIPTION	DATE	APPR.

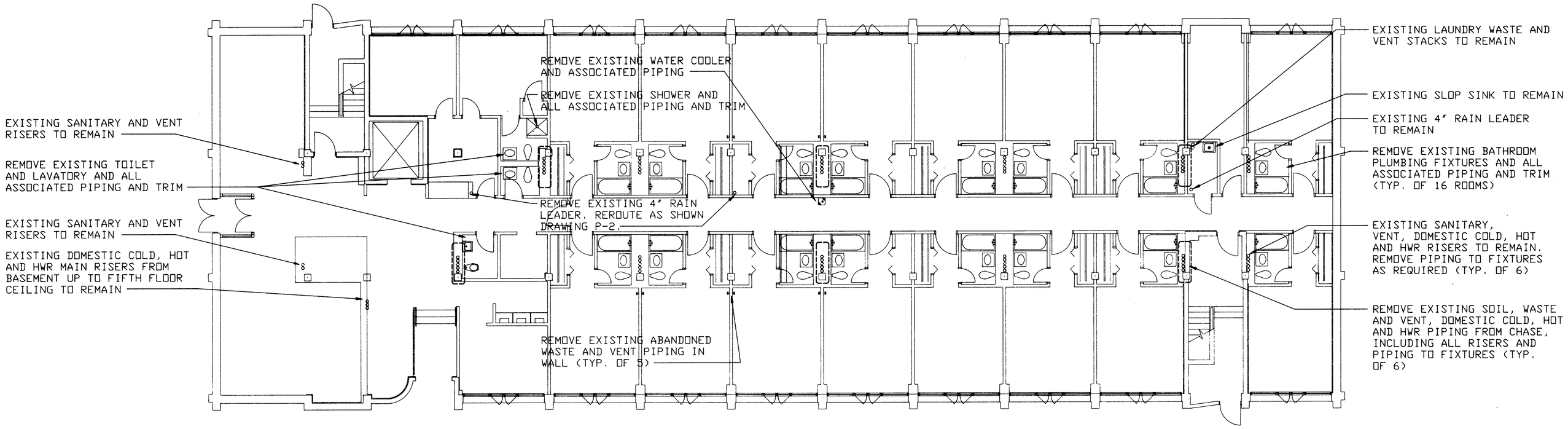

ATA REF: C:\9413\SHELL1D 04/14/94 13:51 (NG 1)

FIRST FLOOR PLUMBING DEMOLITION PLAN

SCALE: 1/8" = 1'-0"

SCALE IN FEET
8 0 8 16

NOTE:
ALL EXISTING SOIL AND WASTE PIPING TO REMAIN SHALL BE SNAKED AND CLEANED OF ANY BUILD-UP PRIOR TO INSTALLATION OF NEW PIPING.

PLUMBING ABBREVIATIONS LIST	
C	COLD
FD	FLOOR DRAIN
H	HOT
HWH	HOT WATER HEATER
HWR	HOT WATER RECIRCULATION
IW	INDIRECT WASTE
SS	SOIL STACK
SV	STACK VENT
V	VENT
VS	VENT STACK
W	WASTE
WC	WATER CLOSET
WCO	WALL CLEAN OUT
WS	WASTE STACK

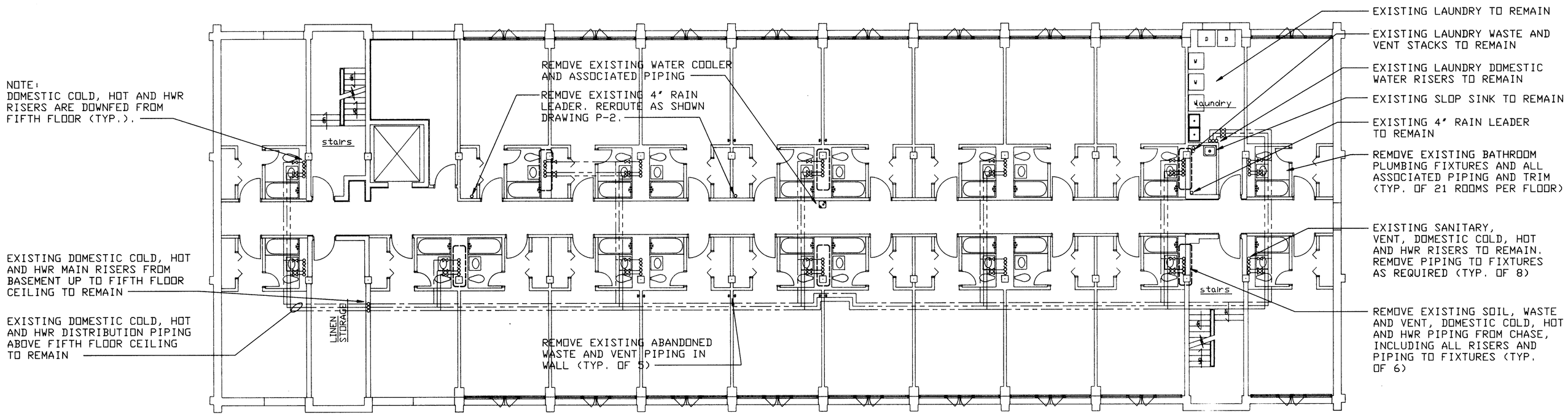

ATA REF: C:\9413\SHELL2SD 05/31/94 11:42 (NG 1)

SECOND FLOOR PLUMBING DEMOLITION PLAN (3RD, 4TH, 5TH FLOOR THE SAME)

SCALE: 1/8" = 1'-0"

SCALE IN FEET
8 0 8 16

PLUMBING SYMBOL TABLE	
SYMBOL	DESCRIPTION
	BALL VALVE OR FIXTURE STOP
	SHOCK ARRESTER
	WATER METER
	FIXTURE TRAP
	WALL CLEANOUT
	FLOOR CLEAN OUT
	PIPE TURNING DOWN
	PIPE TURNING UP
	TEE W/ PIPE TURNING UP
	TEE W/ PIPE TURNING DOWN
	SOIL & WASTE PIPE
	VENT PIPE
	COLD WATER PIPE
	DOMESTIC HOT WATER PIPE
	DOMESTIC HOT WATER RETURN

NORTH

APPLIED THERMODYNAMICS ASSOCIATES, INC.
CONSULTING ENGINEERS
203-456-4554
10 HIGGINS HIGHWAY - SUITE 10 MANSFIELD CENTER, CT 06250

NETC DWG.NO. 30763 - 304	DEPARTMENT OF THE NAVY — NAVAL FACILITIES ENGINEERING COMMAND
NETC SK.NO.	NAVAL EDUCATION AND TRAINING CENTER, NEWPORT, RI.
DSGN. KAH	REPAIR AND MODIFICATIONS TO: BUILDING #678
DR. KAH	
BR. DRJ	
DIR.	
APPROVED DATE	DWG TITLE: PLUMBING DEMOLITION
SATISFACTORY TO	SIZE F — CODE IDENT NO. 80091 — NAVFAC DRAWING NO. 2171448
DATE 11-22-94	CONSTR CONTR. NO. N62472-93-C-1996
	SCALE: AS SHOWN — SPEC. — SHEET P-1 OF 44

STATE OF CONNECTICUT — DAVID R. KAY — No. 9105 — LICENSED PROFESSIONAL ENGINEER

ATA REF: C:\9413\9413P1 08/10/94 14:13

REVISIONS				
SYM	ZONE	DESCRIPTION	DATE	APPR.

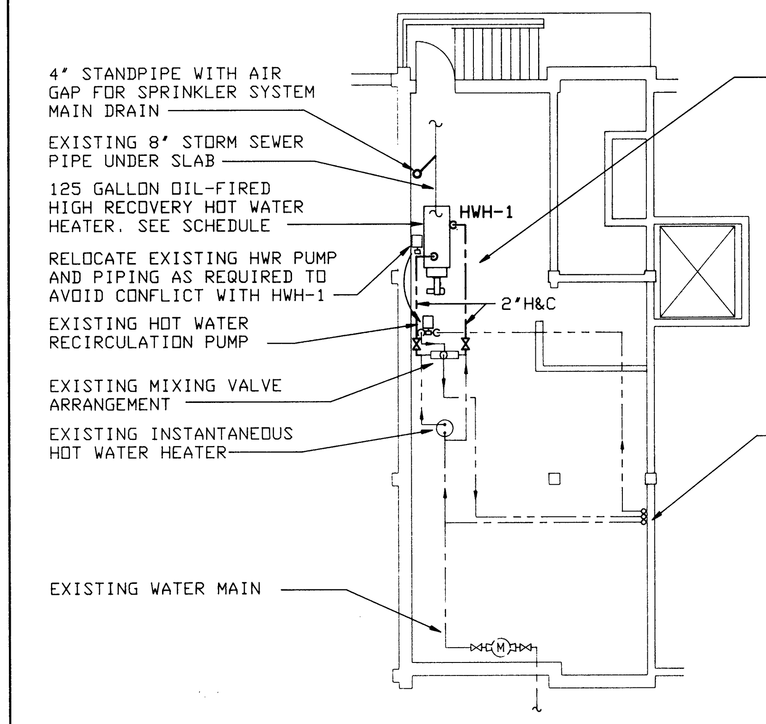

BASEMENT PLUMBING PLAN

SCALE: 1/8' = 1'-0'

SCALE IN FEET 8 0 8 16

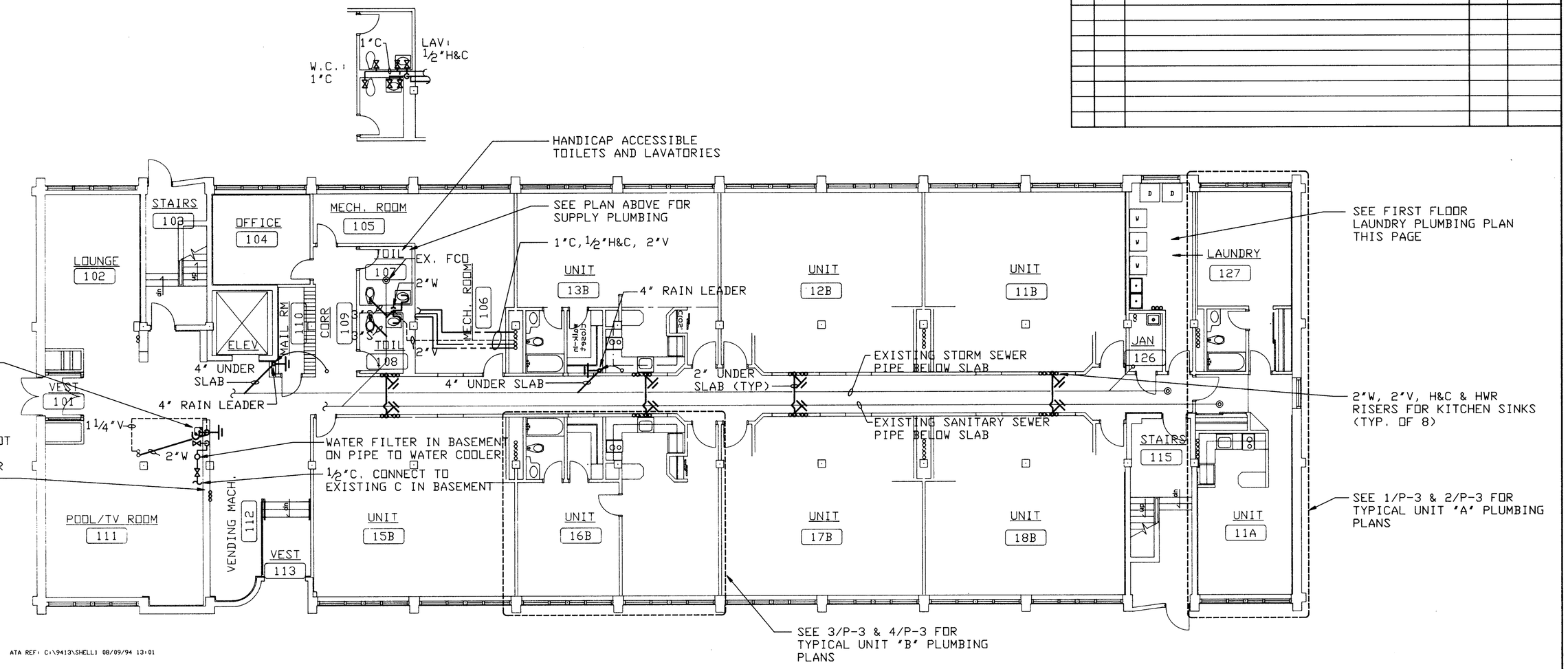

ATA REF: C:\9413\SHELL1 08/09/94 13:01

FIRST FLOOR PLUMBING PLAN

SCALE: 1/8' = 1'-0'

SCALE IN FEET 8 0 8 16

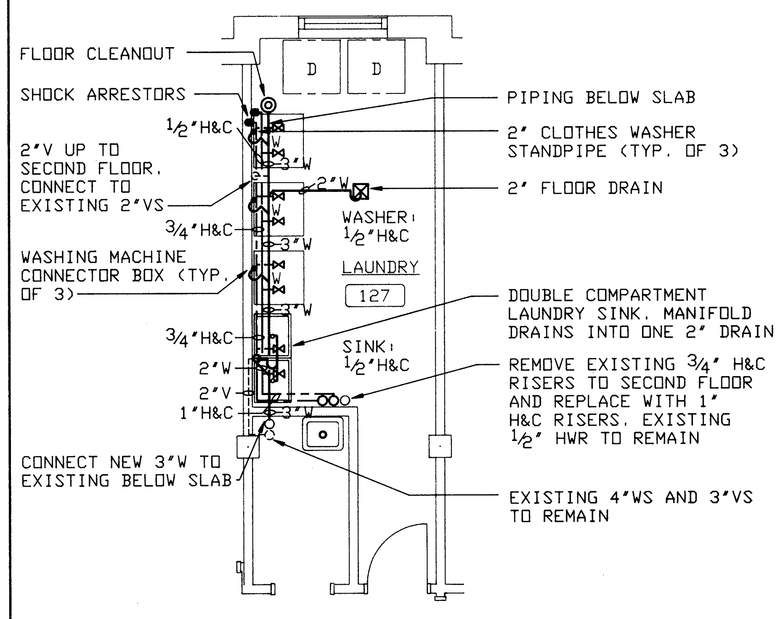

FIRST FLOOR LAUNDRY PLUMBING PLAN

SCALE: 1/4' = 1'-0'

SCALE IN FEET 8 0 8 16

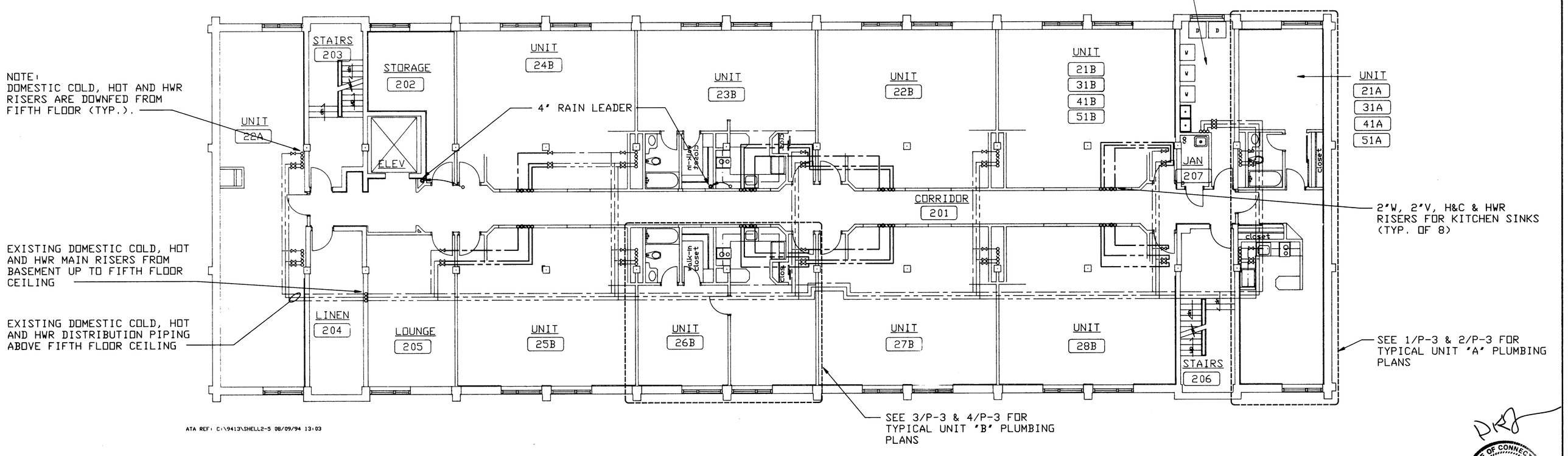

ATA REF: C:\9413\SHELL2-5 08/09/94 13:03

SECOND FLOOR PLUMBING PLAN (3RD, 4TH, 5TH FLOOR THE SAME)

SCALE: 1/8' = 1'-0'

SCALE IN FEET 8 0 8 16

HORIZONTAL HOT WATER HEATER SCHEDULE

TAG	TANK SIZE (GALLONS)	REC. RATE (GPH) (40°F-140°F)	BTU/HR INPUT	GPH #2 OIL	STANDBY HEAT LOSS BTU/HR	MOTOR HP	V/Ø
HWH-1	125	1000	1,000,000	7.2	380	3/4	115/1Ø

NORTH

APPLIED THERMODYNAMICS ASSOCIATES, INC.
CONSULTING ENGINEERS
203-456-4554
10 HIGGINS HIGHWAY - SUITE 10 MANSFIELD CENTER, CT 06250

NETC DWG.NO. 30764 - 304
NETC SK.NO.
DSGN. KAH
DR. KAH
BR. DRJ
DIR.
APPROVED DATE
SATISFACTORY TO
DATE 11-22-94

DEPARTMENT OF THE NAVY — NAVAL FACILITIES ENGINEERING COMMAND
NAVAL EDUCATION AND TRAINING CENTER
NEWPORT, RI.

REPAIR AND MODIFICATIONS TO: BUILDING #678

DWG TITLE: PLUMBING PLAN VIEWS AND SCHEDULES

SIZE F | CODE IDENT NO. 80091 | NAVFAC DRAWING NO. 2171449
CONSTR CONTR. NO. N62472-93-C-1996
SCALE: AS SHOWN | SPEC. | SHEET 23 P-2 OF 44

STATE OF CONNECTICUT — DAVID R. ALCHUSHIN — No. 9102 — LICENSED PROFESSIONAL ENGINEER

ATA REF: C:\9413\9413P2 10/19/94 08:18

REVISIONS				
SYM	ZONE	DESCRIPTION	DATE	APPR.

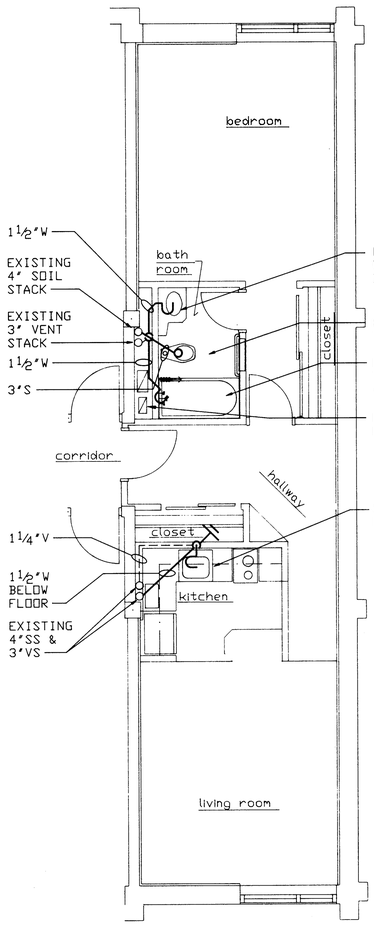

ATA REF: C:\9413\SHELLA 08/09/94 12:56

1 P-3 TYPICAL DRAINAGE PLUMBING PLAN - UNIT A
SCALE: ¼" = 1'-0"

SCALE IN FEET 4 0 4 8

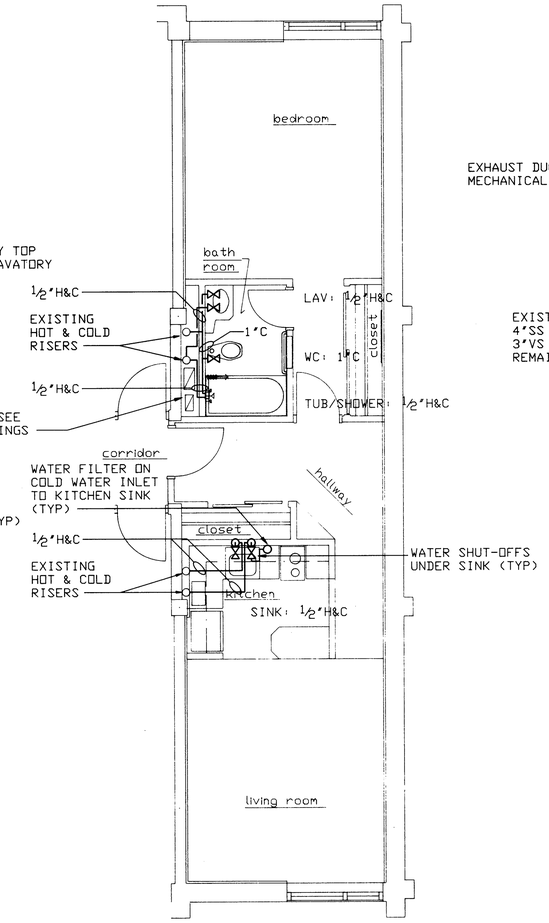

ATA REF: C:\9413\SHELLA 08/09/94 12:56

2 P-3 TYPICAL SUPPLY PLUMBING PLAN - UNIT A
SCALE: ¼" = 1'-0"

SCALE IN FEET 4 0 4 8

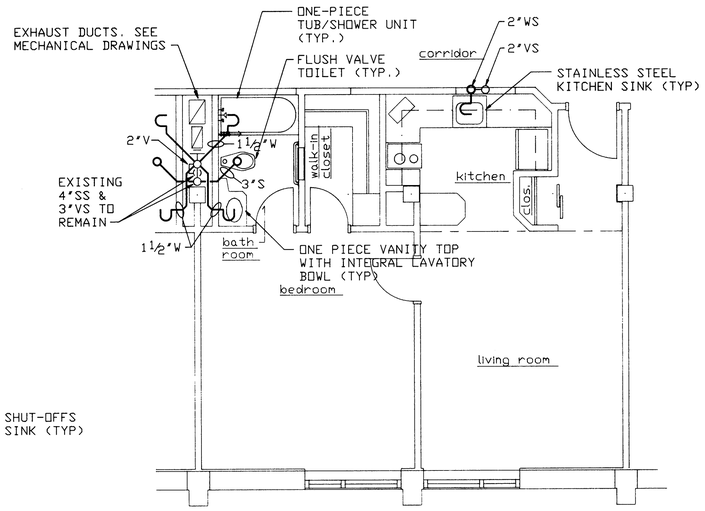

ATA REF: C:\9413\SHELLB 08/09/94 12:56

3 P-3 TYPICAL DRAINAGE PLUMBING PLAN - UNIT B
SCALE: ¼" = 1'-0"

SCALE IN FEET 4 0 4 8

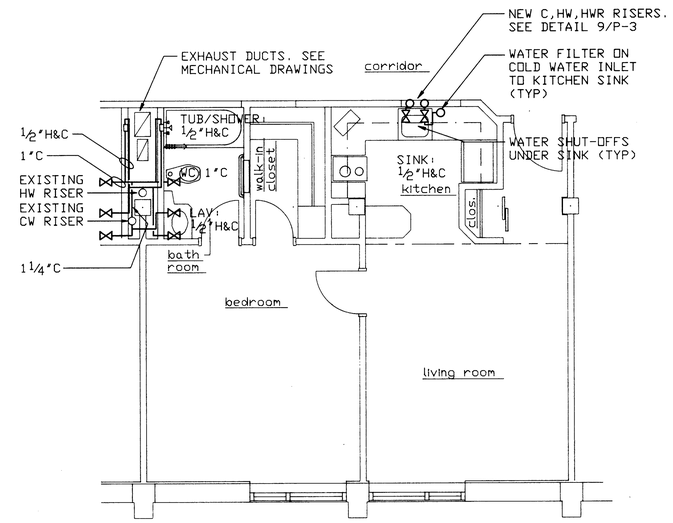

ATA REF: C:\9413\SHELLB 08/09/94 12:56

4 P-3 TYPICAL SUPPLY PLUMBING PLAN - UNIT B
SCALE: ¼" = 1'-0"

SCALE IN FEET 4 0 4 8

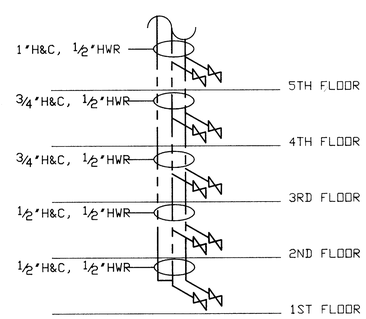

9 P-3 TYPICAL KITCHEN SUPPLY RISER - UNIT B
NOT TO SCALE

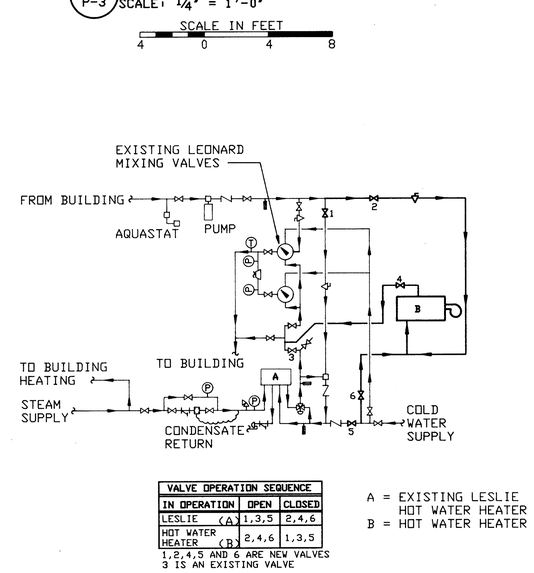

VALVE OPERATION SEQUENCE		
IN OPERATION	OPEN	CLOSED
LESLIE (A)	1,3,5	2,4,6
HOT WATER HEATER (B)	2,4,6	1,3,5

1,2,4,5 AND 6 ARE NEW VALVES
3 IS AN EXISTING VALVE

A = EXISTING LESLIE HOT WATER HEATER
B = HOT WATER HEATER

10 P-3 DOMESTIC HOT WATER SCHEMATIC
NOT TO SCALE

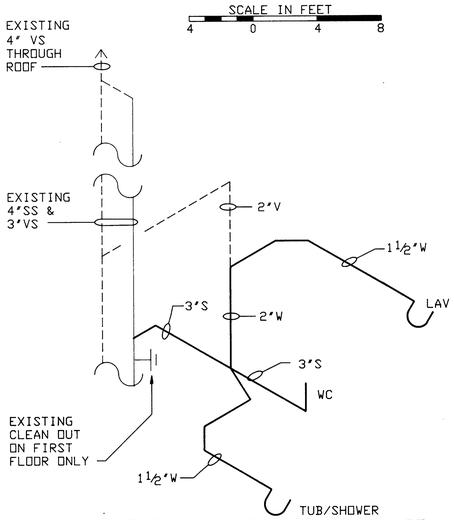

5 P-3 TYPICAL BATHROOM DRAINAGE RISER - UNIT A
NOT TO SCALE

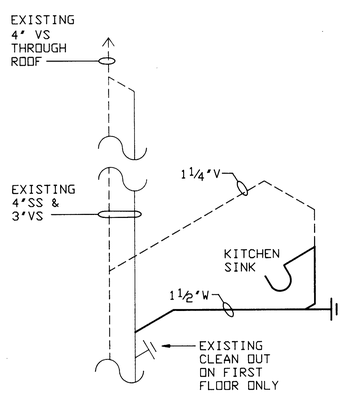

6 P-3 TYPICAL KITCHEN DRAINAGE RISER - UNIT A
NOT TO SCALE

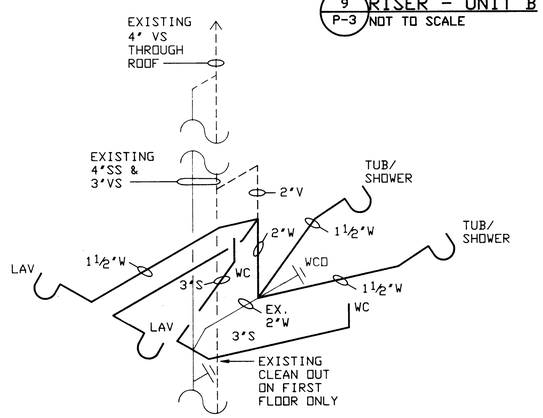

7 P-3 TYPICAL BATHROOM DRAINAGE RISER - UNIT B
NOT TO SCALE

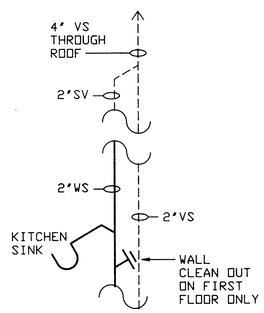

8 P-3 TYPICAL KITCHEN DRAINAGE RISER - UNIT B
NOT TO SCALE

APPLIED THERMODYNAMICS ASSOCIATES, INC.
CONSULTING ENGINEERS
203-456-4554
10 HIGGINS HIGHWAY - SUITE 10 MANSFIELD CENTER, CT 06250

NETC DWG.NO. 30765 - 304	DEPARTMENT OF THE NAVY — NAVAL FACILITIES ENGINEERING COMMAND
NETC SK.NO.	NAVAL EDUCATION AND TRAINING CENTER NEWPORT, RI.
DSGN. KAH	
DR. KAH	REPAIR AND MODIFICATIONS TO: BUILDING #678
BR. DRJ	
DIR.	
APPROVED / DATE 12/12/94	DWG TITLE: PLUMBING TYPICAL ROOM PLANS AND RISERS
SATISFACTORY TO / DATE 11-22-94	SIZE F · CODE IDENT NO. 80091 · NAVFAC DRAWING NO. 2171450
	SCALE: AS SHOWN · CONSTR CONTR. NO. N62472-93-C-1996
	SPEC. · SHEET P-3 OF 41

ATA REF: C:\9413\9413P3 10/18/94 16:33

REVISIONS				
SYM	ZONE	DESCRIPTION	DATE	APPR.

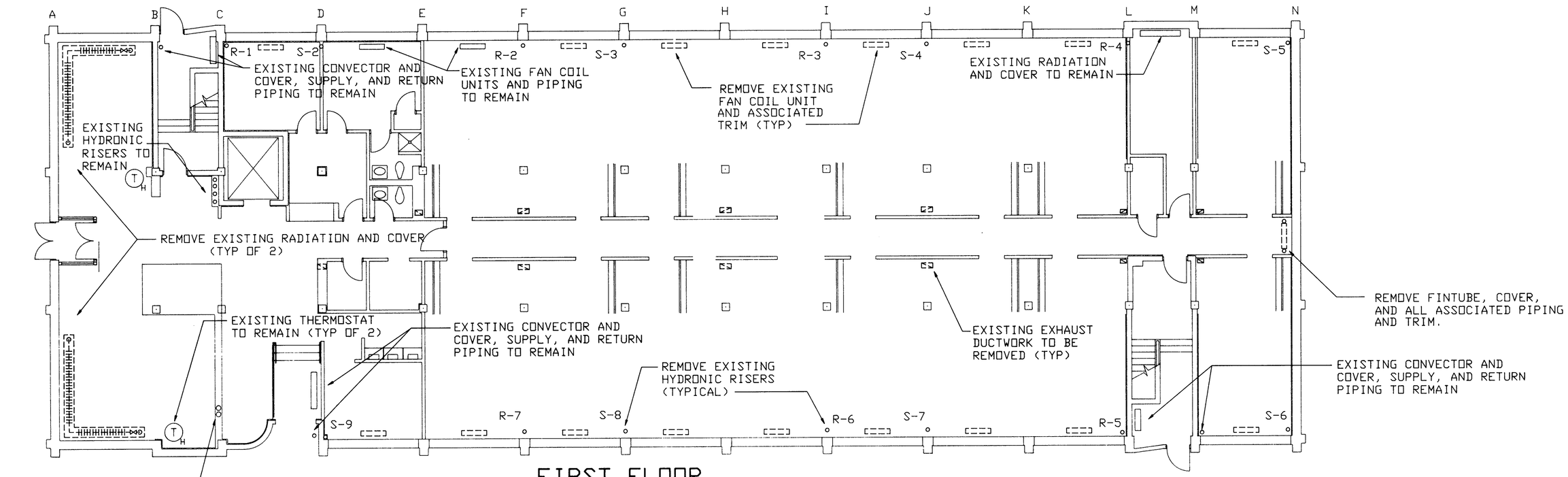

FIRST FLOOR DEMOLITION PLAN

SCALE : 1/8" = 1' - 0"

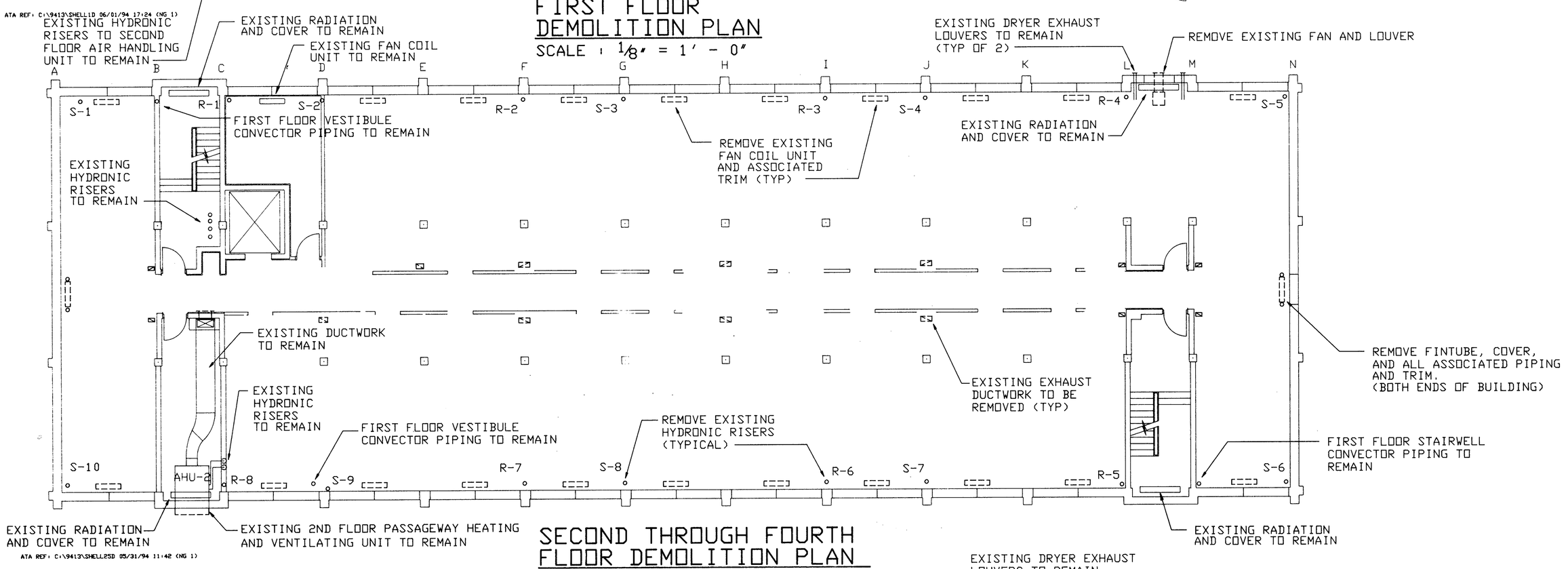

SECOND THROUGH FOURTH FLOOR DEMOLITION PLAN

SCALE: 1/8" = 1'-0"

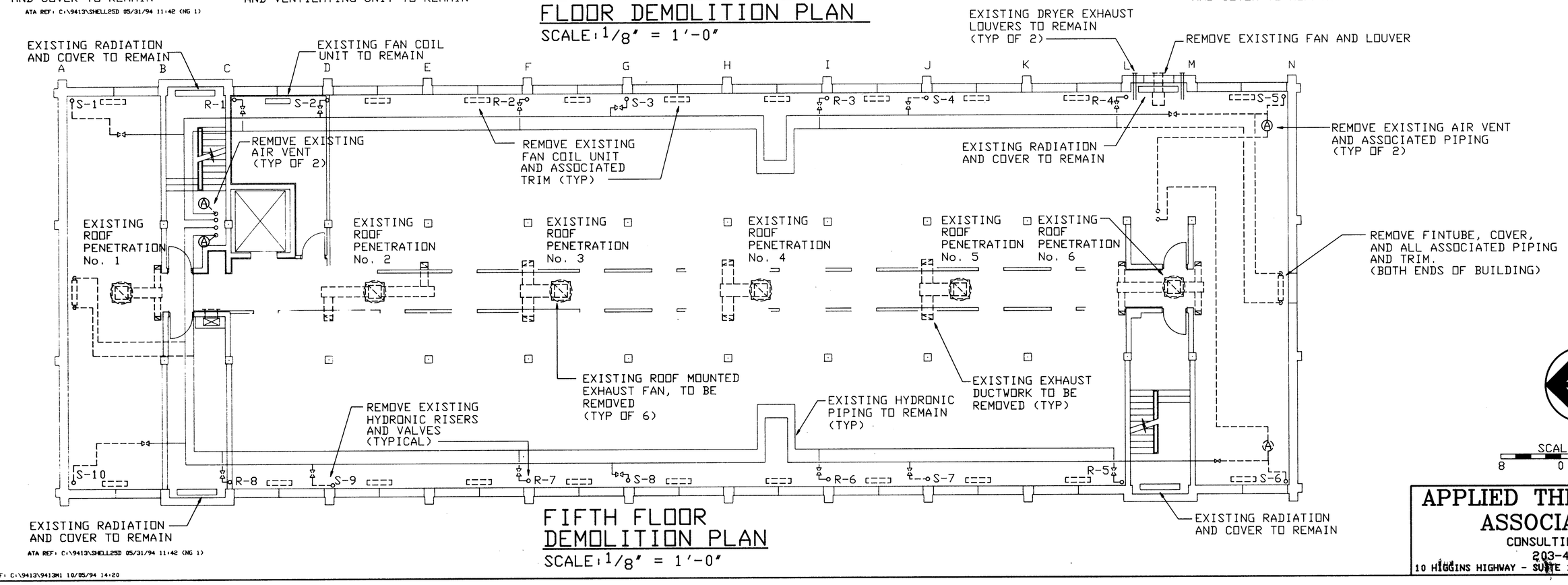

FIFTH FLOOR DEMOLITION PLAN

SCALE: 1/8" = 1'-0"

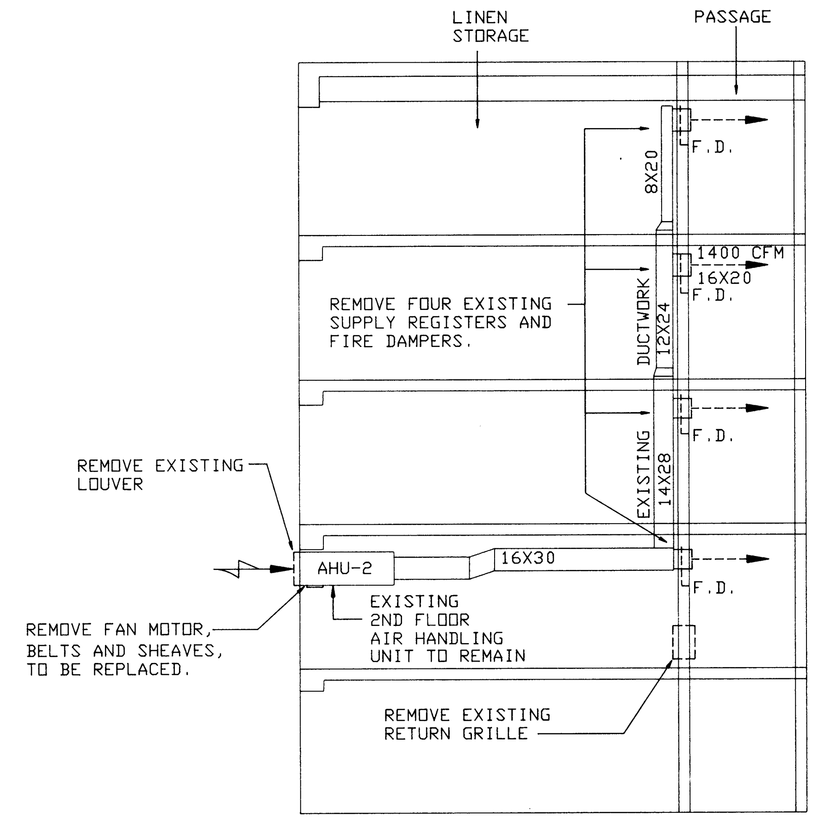

CORRIDOR VENTILATION DEMOLITION ELEVATION

SCALE: 1/8" = 1'-0"

MECHANICAL DEMOLITION NOTES:

1. REMOVE ALL BRANCH PIPING, VALVES, AND FITTINGS AS SHOWN
2. REMOVE ALL EXISTING FAN COIL UNITS AND RADIATION AND COVERS EXCEPT AS NOTED
3. REMOVE ALL EXISTING DUCTWORK AS NOTED
4. REMOVE ALL EXISTING ROOFTOP EXHAUST FANS AND CURBS
   - A. EXISTING ROOF PENETRATION No.1 : NOT TO BE REUSED
   - B. EXISTING ROOF PENETRATION No.2 : NOT TO BE REUSED
   - C. EXISTING ROOF PENETRATION No.3 : TO BE REUSED
   - D. EXISTING ROOF PENETRATION No.4 : NOT TO BE REUSED
   - E. EXISTING ROOF PENETRATION No.5 : TO BE REUSED
   - F. EXISTING ROOF PENETRATION No.6 : TO BE REUSED

LEGEND	
LINETYPE	DESCRIPTION
———	EXISTING TO REMAIN
- - - - - -	TO BE REMOVED

STATE OF CONNECTICUT DAVID R. JACKSON LICENSED PROFESSIONAL ENGINEER LIC. 9192

NORTH

SCALE IN FEET 8 0 8 16

APPLIED THERMODYNAMICS ASSOCIATES, INC.
CONSULTING ENGINEERS
203-456-4554
10 HIGGINS HIGHWAY - SUITE 10 MANSFIELD CENTER, CT 06250

NETC DWG. NO.	30766 - 304
NETC SK. NO.	
DSGN.	DLS
DR.	DLS
BR.	DRJ
DIR.	
APPROVED	DATE
SATISFACTORY TO	
DATE	11-22-94

DEPARTMENT OF THE NAVY — NAVAL FACILITIES ENGINEERING COMMAND

NAVAL EDUCATION AND TRAINING CENTER
NEWPORT, RI.

REPAIR AND MODIFICATIONS TO: BUILDING #678

DWG TITLE: MECHANICAL DEMOLITION

SIZE	CODE IDENT NO.	NAVFAC DRAWING NO.
F	80091	2171451
		CONSTR CONTR. NO. N62472-93-C-1996
SCALE: AS SHOWN		SPEC. / SHEET M-1½ OF 44

ATA REF: C:\9413\9413M1 10/05/94 14:20

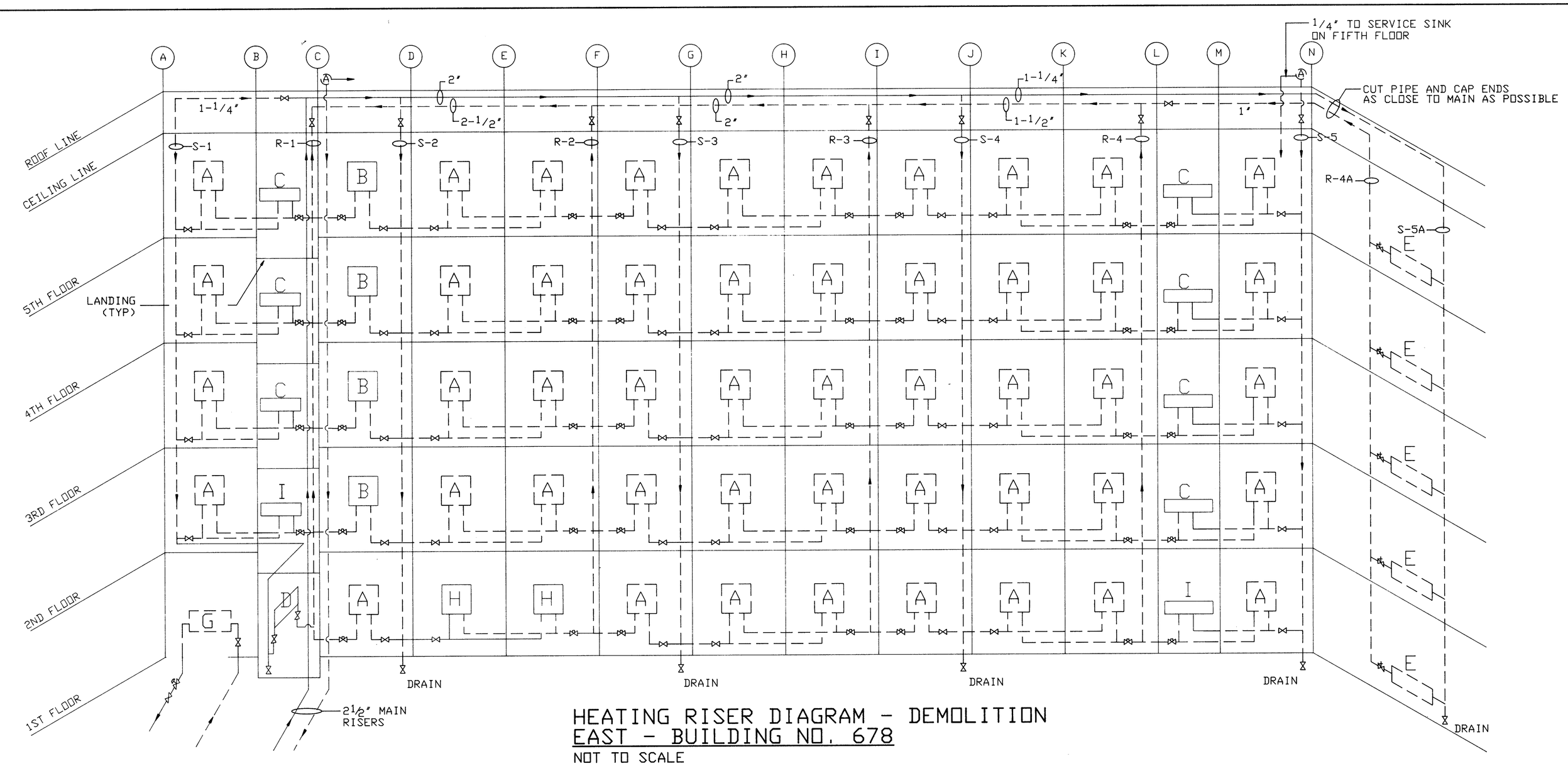

HEATING RISER DIAGRAM - DEMOLITION
EAST - BUILDING NO. 678
NOT TO SCALE

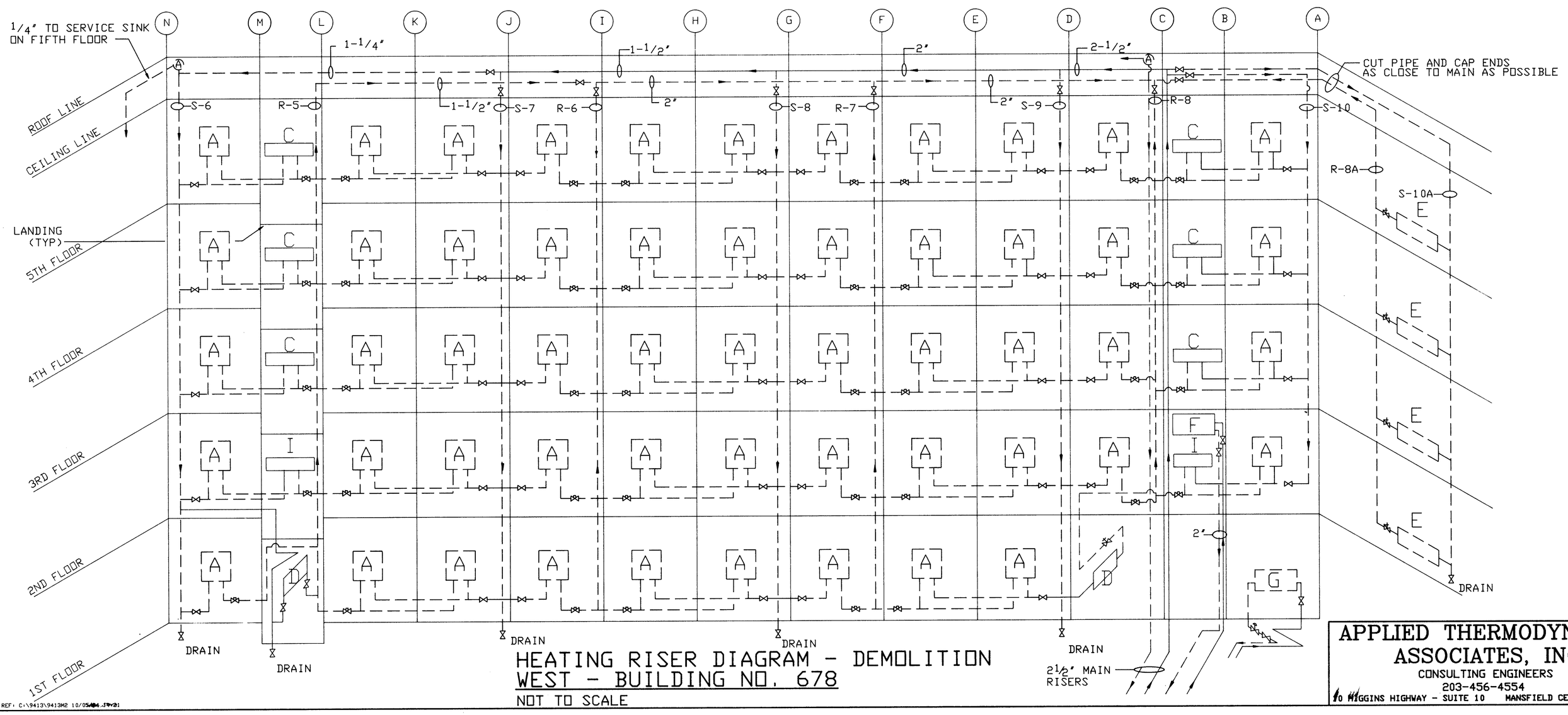

HEATING RISER DIAGRAM - DEMOLITION
WEST - BUILDING NO. 678
NOT TO SCALE

REVISIONS				
SYM	ZONE	DESCRIPTION	DATE	APPR.

UNIT IDENTIFICATION:

A: EXISTING FAN COIL UNIT - TO BE REMOVED
HYDRONIC PIPING COVER - TO BE REMOVED
ALL PIPING AND VALVES - TO BE REMOVED

B: EXISTING FAN COIL UNIT - TO REMAIN
HYDRONIC PIPING COVER - TO BE REMOVED
BRANCH PIPING AND VALVES - TO BE REMOVED
PIPING INSIDE UNITS - TO REMAIN

C: EXISTING FINTUBE RADIATION - TO REMAIN
COVER - TO REMAIN
BALANCE VALVE AND BRANCH PIPING - TO BE REMOVED

D: EXISTING CONVECTOR - TO REMAIN
COVER AND PIPING - TO REMAIN
SUPPLY SIDE CONTROL VALVE - TO BE REMOVED

E: EXISTING FINTUBE RADIATION - TO BE REMOVED
COVER, PIPING AND VALVES - TO BE REMOVED

F: EXISTING AIR HANDLER (2ND FLOOR) - TO REMAIN

G: EXISTING FINTUBE RADIATION - TO BE REMOVED:
COVER AND VALVE - TO BE REMOVED:

H: EXISTING FAN COIL UNIT - TO REMAIN
HYDRONIC PIPING COVER - TO REMAIN
PIPING INSIDE UNIT - TO REMAIN
BRANCH PIPING AND VALVES - TO REMAIN

I: EXISTING FINTUBE RADIATION - TO REMAIN
COVER - TO REMAIN
BRANCH PIPING - TO REMAIN
BALANCE VALVE - TO BE REMOVED

DEMOLITION NOTES:

1. REMOVE ALL BRANCH PIPING, VALVES, AND TRIM AS SHOWN
2. REMOVE ALL BRANCH RISER PIPING, VALVES AND TRIM AS SHOWN
3. REMOVE ALL EXISTING AIR VENTS
4. S-# : BRANCH RISER - SUPPLY
5. R-# : BRANCH RISER - RETURN

DRJ

STATE OF CONNECTICUT DAVID R. JACKSON No. 9102 LICENSED PROFESSIONAL ENGINEER

LEGEND	
LINETYPE	DESCRIPTION
———	EXISTING TO REMAIN
- - - -	TO BE REMOVED

APPLIED THERMODYNAMICS ASSOCIATES, INC.
CONSULTING ENGINEERS
203-456-4554
10 HIGGINS HIGHWAY - SUITE 10 MANSFIELD CENTER, CT 06250

NETC DWG.NO. 30767 - 304
NETC SK.NO.
DSGN. DLS
DR. DLS
BR. DRJ
DIR.
APPROVED H. Belsa PE DATE 12/12/94
SATISFACTORY TO
DATE 11-22-94

DEPARTMENT OF THE NAVY — NAVAL FACILITIES ENGINEERING COMMAND
NAVAL EDUCATION AND TRAINING CENTER
NEWPORT, RI.

REPAIR AND MODIFICATIONS TO: BUILDING #678

DWG TITLE: MECHANICAL RISER DEMOLITION

SIZE: F | CODE IDENT NO.: 80091 | NAVFAC DRAWING NO.: 2171452
CONSTR CONTR. NO. N62472-93-C-1996
SCALE: AS SHOWN | SPEC. | SHEET M-2 26 OF 44

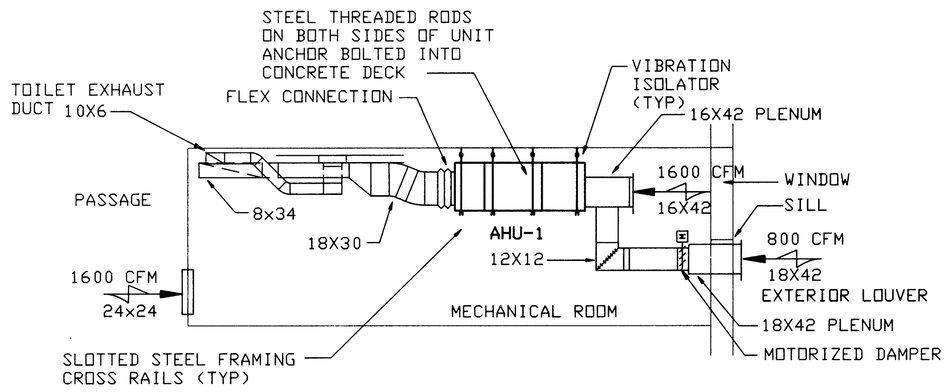

1 M-3 AHU-1 ELEVATION
SCALE: 1/4" - 1'-0"

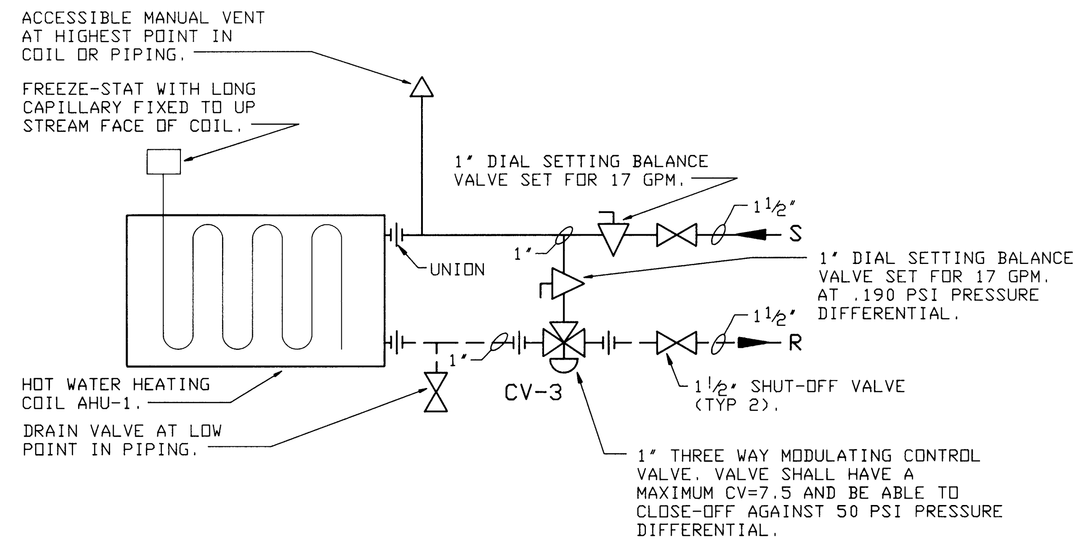

2 M-3 AHU-1 HYDRONIC COIL PIPING DETAIL
SCALE: NOT TO SCALE

REVISIONS				
SYM	ZONE	DESCRIPTION	DATE	APPR.

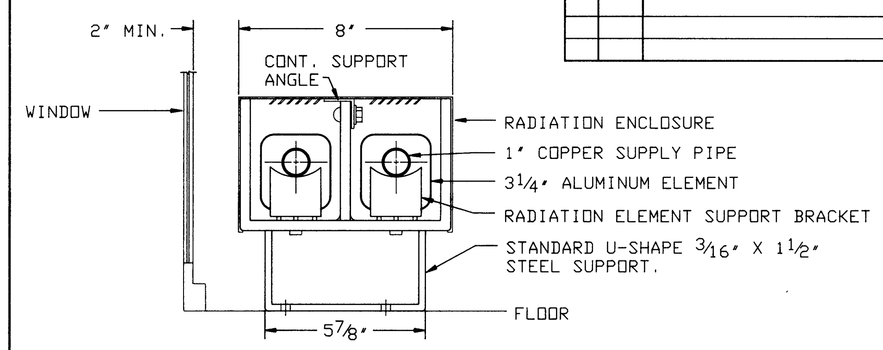

3 M-3 BASEBOARD RADIATION FLOOR MOUNTED ENCLOSURE DETAIL
SCALE: NOT TO SCALE

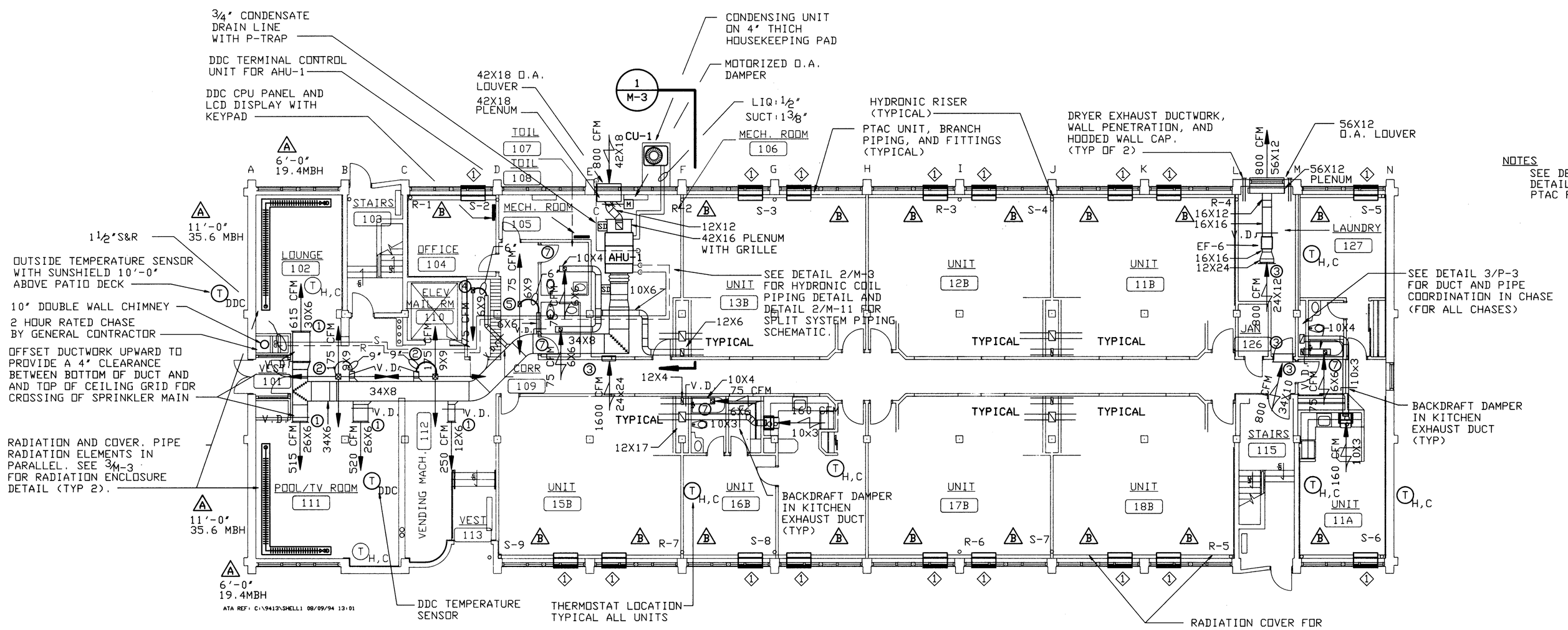

FIRST FLOOR PLAN
SCALE : 1/8" = 1' - 0"

SCALE IN FEET
8 0 8 16

NORTH

APPLIED THERMODYNAMICS ASSOCIATES, INC.
CONSULTING ENGINEERS
203-456-4554
10 HIGGINS HIGHWAY - SUITE 10 MANSFIELD CENTER, CT 06250

STATE OF CONNECTICUT DAVID R. JACKSON No. 9102 LICENSED PROFESSIONAL ENGINEER

NETC DWG.NO. 30768 - 304	DEPARTMENT OF THE NAVY — NAVAL FACILITIES ENGINEERING COMMAND
NETC SK.NO.	NAVAL EDUCATION AND TRAINING CENTER NEWPORT, RI.
DSGN. DLS	
DR. KAS	REPAIR AND MODIFICATIONS TO: BUILDING #678
BR. DRJ	
DIR.	
APPROVED / DATE	DWG TITLE: MECHANICAL PLAN VIEW AND DETAILS
SATISFACTORY TO	SIZE F · CODE IDENT NO. 80091 · NAVFAC DRAWING NO. 2171453
DATE 11-22-94	CONSTR CONTR. NO. N62472-93-C-1996
	SCALE: AS SHOWN · SPEC. · SHEET M-3 27 OF 44

ATA REF: C:\9413\9413M3 10/07/94 10:44

REVISIONS				
SYM	ZONE	DESCRIPTION	DATE	APPR.

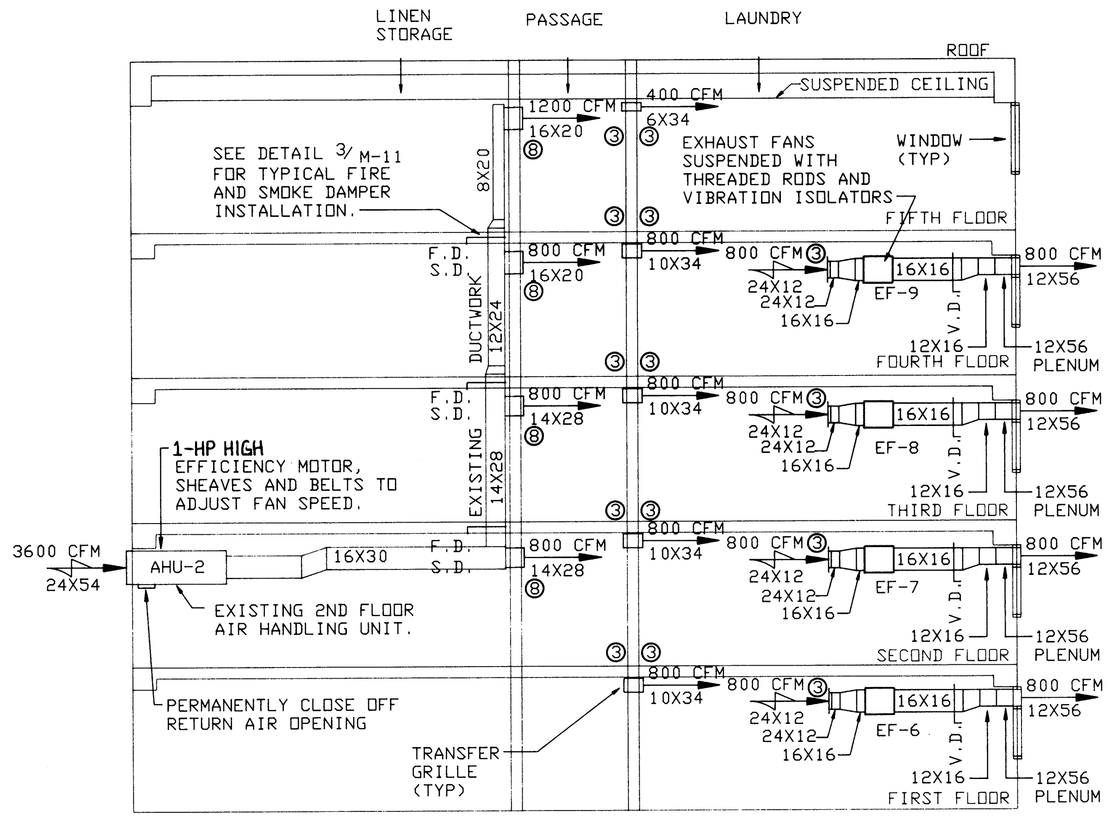

1 M-4 CORRIDOR VENTILATION ELEVATION
NO SCALE

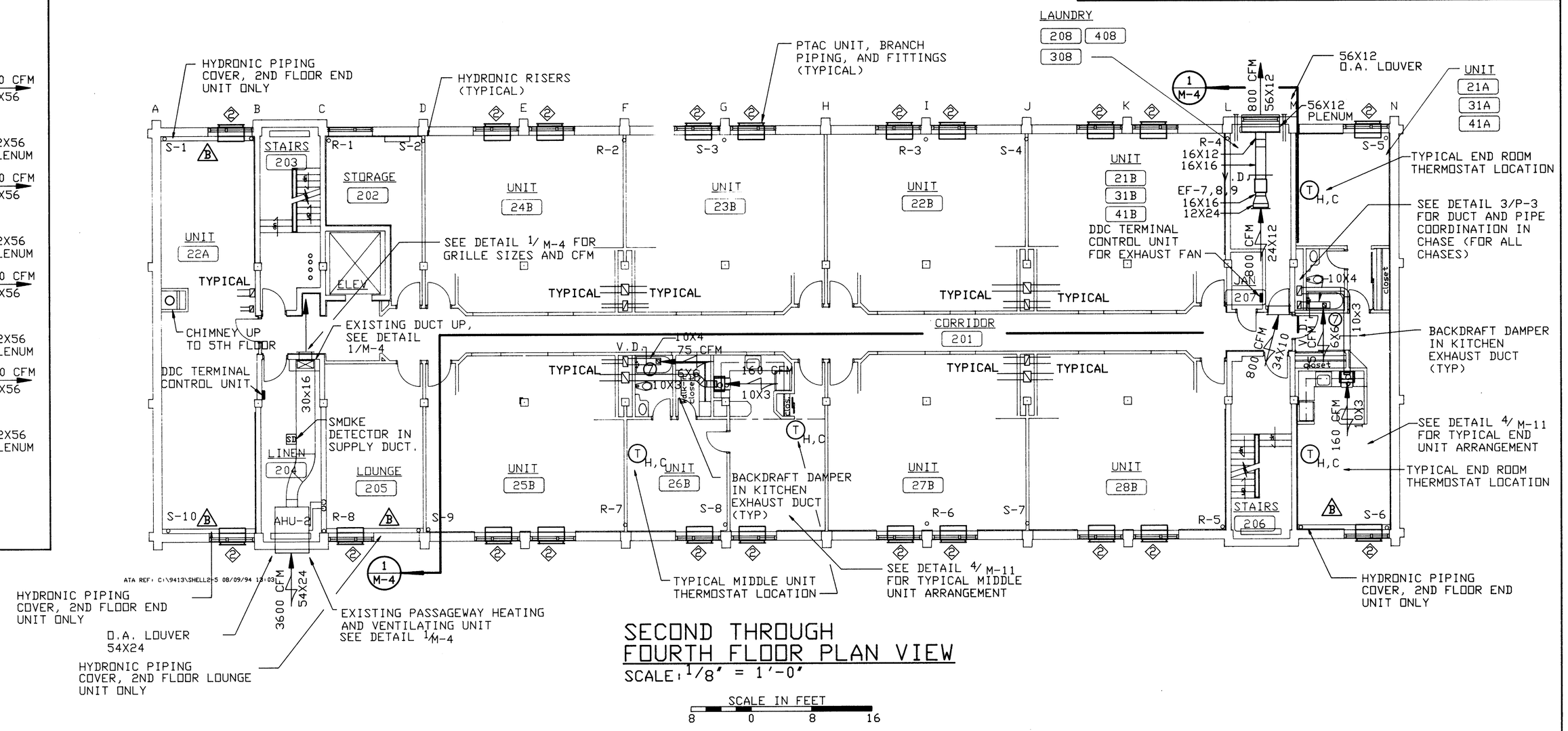

SECOND THROUGH FOURTH FLOOR PLAN VIEW

SCALE: 1/8" = 1'-0"

SCALE IN FEET 8 0 8 16

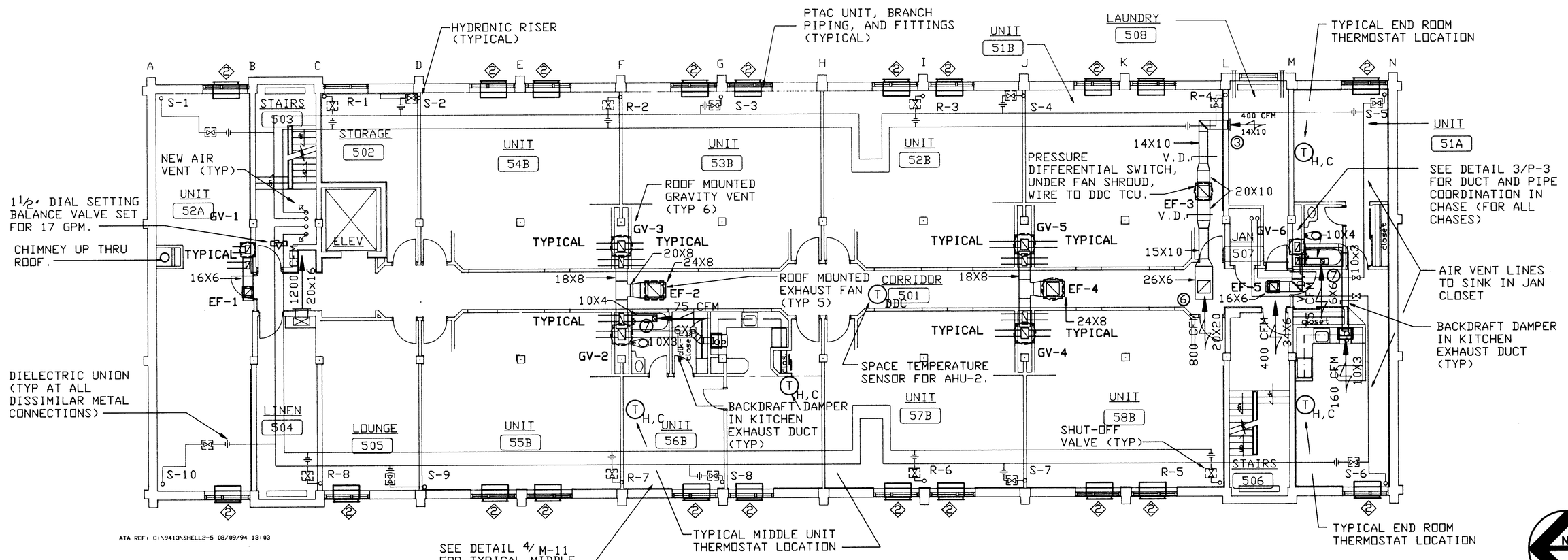

FIFTH FLOOR PLAN VIEW

SCALE: 1/8" = 1'-0"

SCALE IN FEET 8 0 8 16

NOTES:

1. SEE DETAIL 5/M-11 FOR PTAC PIPING
2. REPLACE EXISTING AHU-2 CONTROL VALVE. VALVE SHALL BE SAME PATTERN AND APPROXIMATE CV AS EXISTING VALVE.

NORTH

STATE OF CONNECTICUT — DAVID R. JACKSON — No. 9102 — LICENSED PROFESSIONAL ENGINEER

APPLIED THERMODYNAMICS ASSOCIATES, INC.
CONSULTING ENGINEERS
203-456-4554
10 HIGGINS HIGHWAY - SUITE 10 MANSFIELD CENTER, CT 06250

NETC DWG.NO. 30769 - 304	DEPARTMENT OF THE NAVY — NAVAL FACILITIES ENGINEERING COMMAND
NETC SK.NO.	NAVAL EDUCATION AND TRAINING CENTER, NEWPORT, RI.
DSGN. DLS	
DR. DLS	REPAIR AND MODIFICATIONS TO: BUILDING #678
BR. DRJ	
DIR.	
APPROVED / DATE	DWG TITLE: MECHANICAL PLAN VIEWS AND DETAILS
SATISFACTORY TO / DATE 11-22-94	SIZE F — CODE IDENT NO. 80091 — NAVFAC DRAWING NO. 2171454
	CONSTR CONTR. NO. N62472-93-C-1996
	SCALE: AS SHOWN — SPEC. — SHEET M-4 28 OF 44

ATA REF: C:\9413\9413M4 10/07/94 13:06

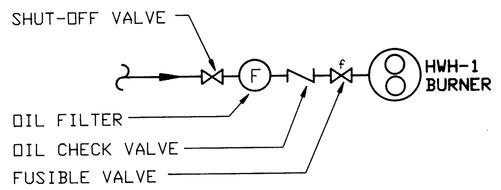

1 / M-5 BURNER PIPING DETAIL
NOT TO SCALE

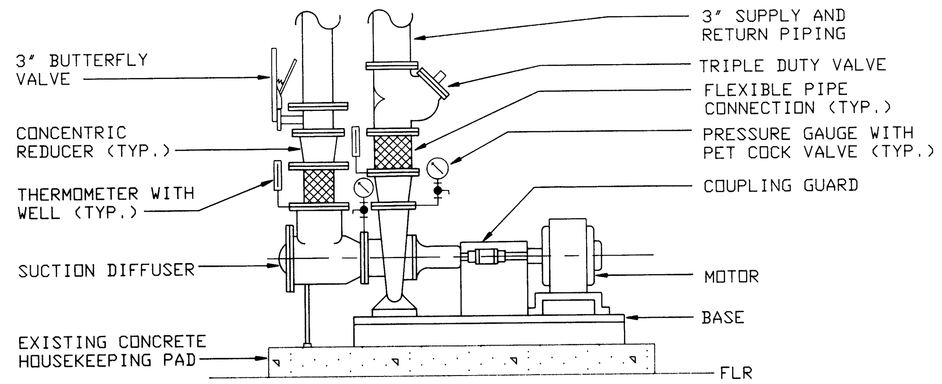

2 / M-5 END SUCTION PUMP DETAIL
NOT TO SCALE

NOTES:

1. SEE DRAWING M-7 FOR SCHEMATIC PIPING DIAGRAMS.
2. REMOVE EXISTING ABANDON HOT WATER HEATER.
3. BREECHING AND CHIMNEY SHALL BE FULLY COVERED, FROM FLOOR THRU ROOF, BY A MANUFACTURER'S WARRANTY.

LEGEND

LINETYPE	DESCRIPTION
———	EXISTING TO REMAIN
———	PROVIDE NEW
- - - - -	TO BE REMOVED

REVISIONS

SYM	ZONE	DESCRIPTION	DATE	APPR.

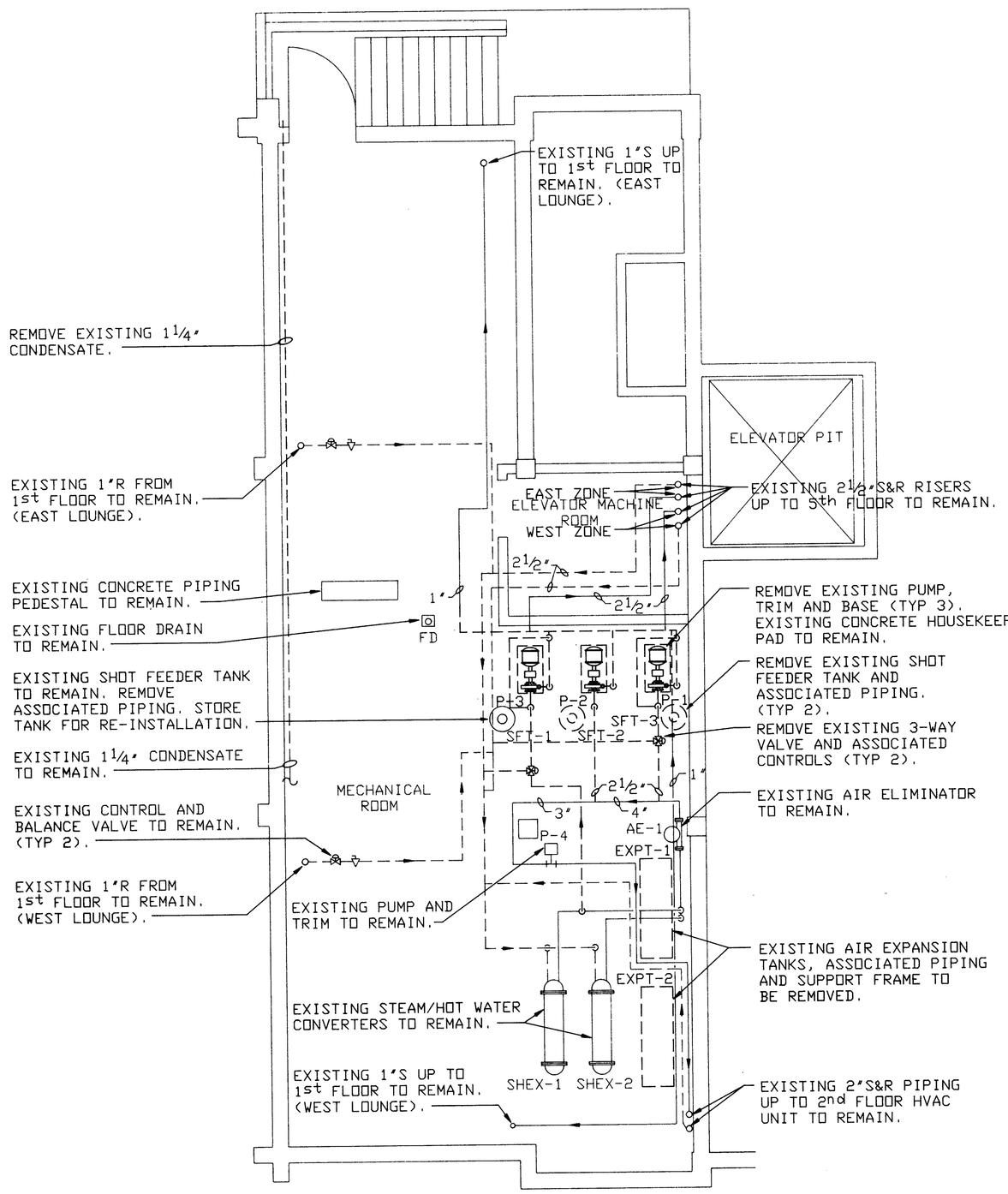

ATA REF: C:\9413\SHELL0 05/31/94 13:58 (NG 1)

MECHANICAL ROOM DEMOLITION PLAN
SCALE: ¼" = 1' -0"

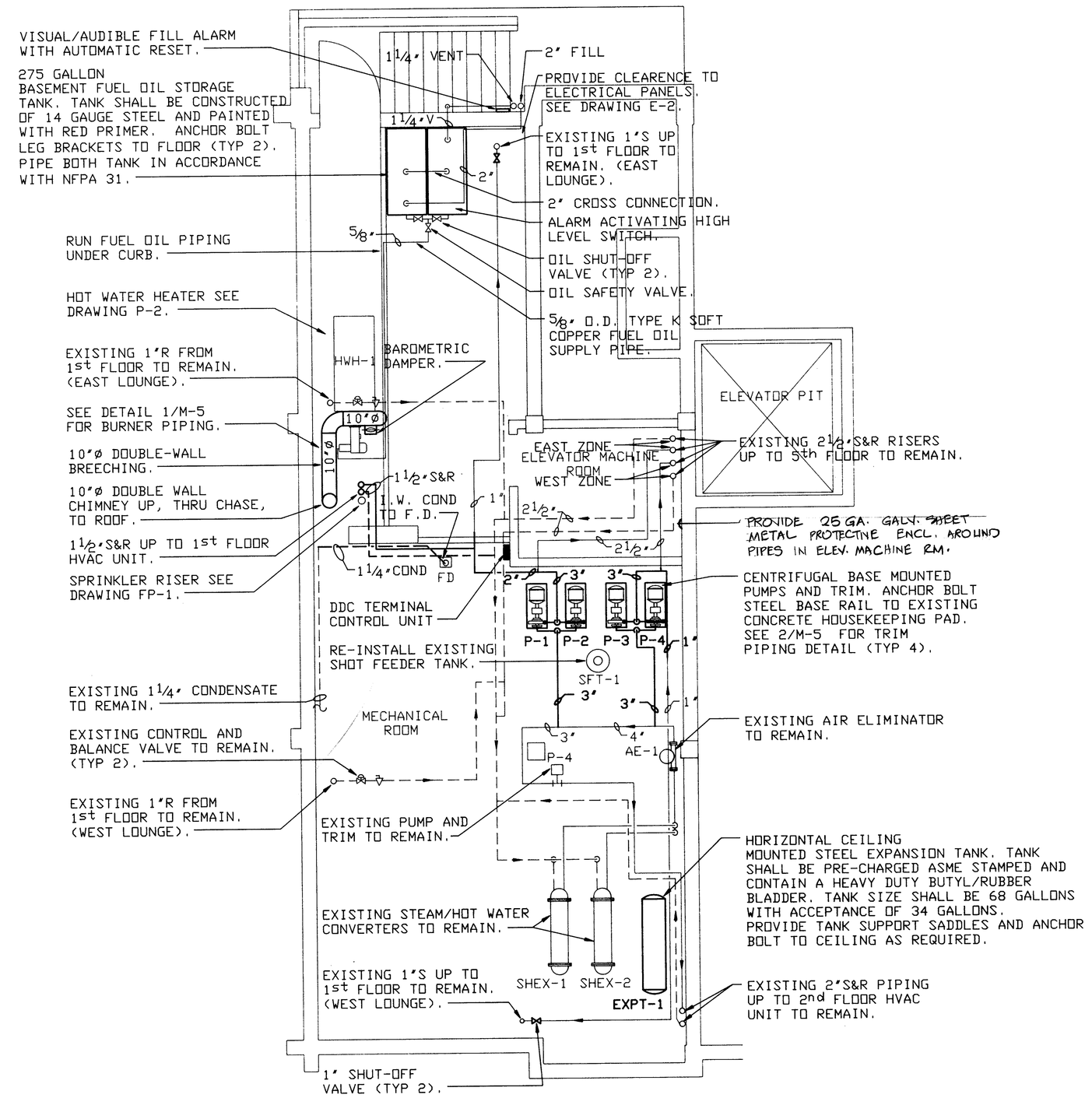

ATA REF: C:\9413\SHELL0 05/31/94 13:58 (NG 1)

MECHANICAL ROOM NEW WORK PLAN
SCALE: ¼" = 1' -0"

STATE OF CONNECTICUT NAVIN K. GAUTAMADAS LICENSED No. 9102 PROFESSIONAL ENGINEER

APPLIED THERMODYNAMICS ASSOCIATES, INC.
CONSULTING ENGINEERS
203-456-4554
10 HIGGINS HIGHWAY - SUITE 10 MANSFIELD CENTER, CT 06250

NETC DWG.NO. 30770 - 304	DEPARTMENT OF THE NAVY — NAVAL FACILITIES ENGINEERING COMMAND
NETC SK.NO.	NAVAL EDUCATION AND TRAINING CENTER, NEWPORT, RI.
DSGN. KAS	REPAIR AND MODIFICATIONS TO: BUILDING #678
DR. KAS	
BR. DRJ	
DIR.	
APPROVED / DATE 12/12/94	DWG TITLE: MECHANICAL ROOM DEMOLITION, NEW WORK, AND DETAILS
SATISFACTORY TO / DATE 11-22-94	SIZE F · CODE IDENT NO. 80091 · NAVFAC DRAWING NO. 2171455
	CONSTR CONTR. NO. N62472-93-C-1996
	SCALE: AS SHOWN · SPEC. · SHEET M-5 (2) OF 44

ATA REF: C:\9413\9413M5 10/05/94 14:24

REVISIONS				
SYM	ZONE	DESCRIPTION	DATE	APPR.

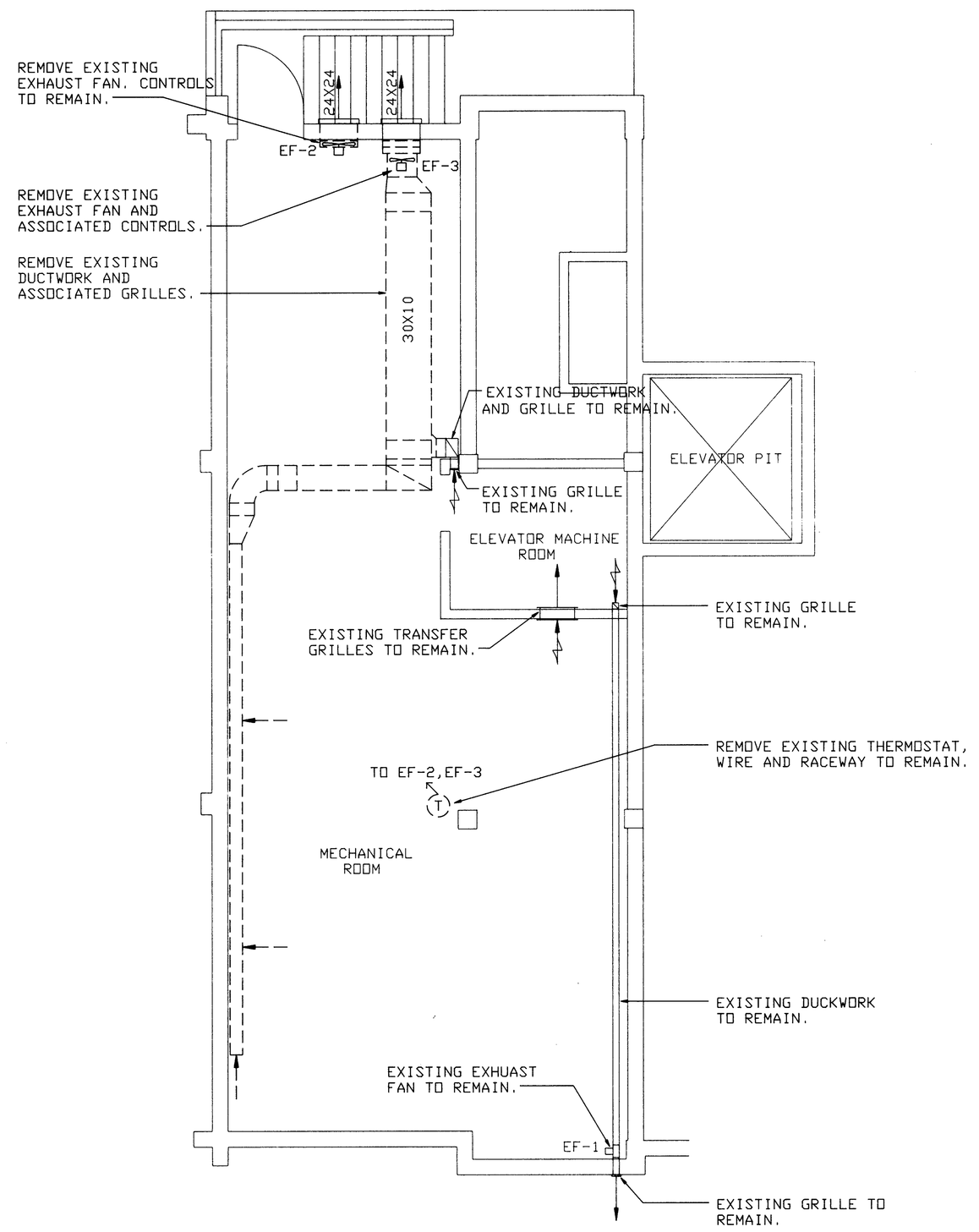

ATA REF: C:\9413\SHELL0 05/31/94 13:58 (NG 1)

MECHANICAL ROOM VENTILATION
DEMOLITION PLAN

SCALE: 1/4" = 1' -0"

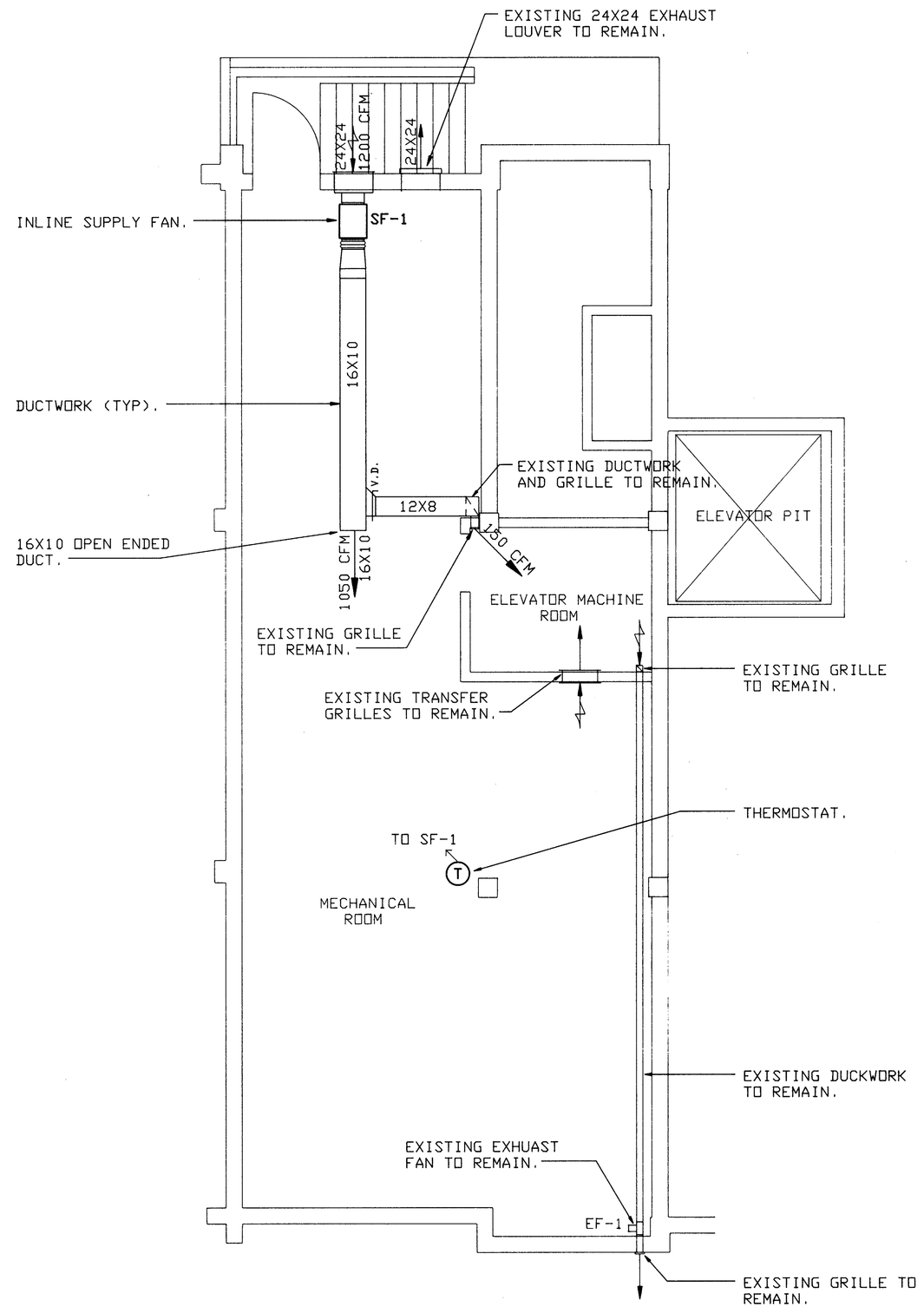

ATA REF: C:\9413\SHELL0 05/31/94 13:58 (NG 1)

MECHANICAL ROOM VENTILATION
NEW WORK PLAN

SCALE: 1/4" = 1' -0"

LEGEND	
LINETYPE	DESCRIPTION
————	EXISTING TO REMAIN
————	PROVIDE NEW
- - - - -	TO BE REMOVED

APPLIED THERMODYNAMICS ASSOCIATES, INC.
CONSULTING ENGINEERS
203-456-4554
10 HIGGINS HIGHWAY - SUITE 10 MANSFIELD CENTER, CT 06250

NETC DWG.NO. 30771 - 304	DEPARTMENT OF THE NAVY — NAVAL FACILITIES ENGINEERING COMMAND
NETC SK.NO.	NAVAL EDUCATION AND TRAINING CENTER, NEWPORT, RI.
DSGN. KAS	
DR. KAS	REPAIR AND MODIFICATIONS TO: BUILDING #678
BR. DRJ	
DIR.	
APPROVED / DATE	DWG TITLE: MECHANICAL ROOM VENTILATION DEMOLITION AND NEW WORK
SATISFACTORY TO	SIZE: F — CODE IDENT NO.: 80091 — NAVFAC DRAWING NO.: 2171456
DATE 11-22-94	CONSTR CONTR. NO. N62472-93-C-1996
	SCALE: AS SHOWN — SPEC. — SHEET M-6 30 OF 44

STATE OF CONNECTICUT — DAVID R. JACKSON — No. 9102 — LICENSED PROFESSIONAL ENGINEER

ATA REF: C:\9413\9413M6 10/05/94 14:28

REVISIONS				
SYM	ZONE	DESCRIPTION	DATE	APPR.

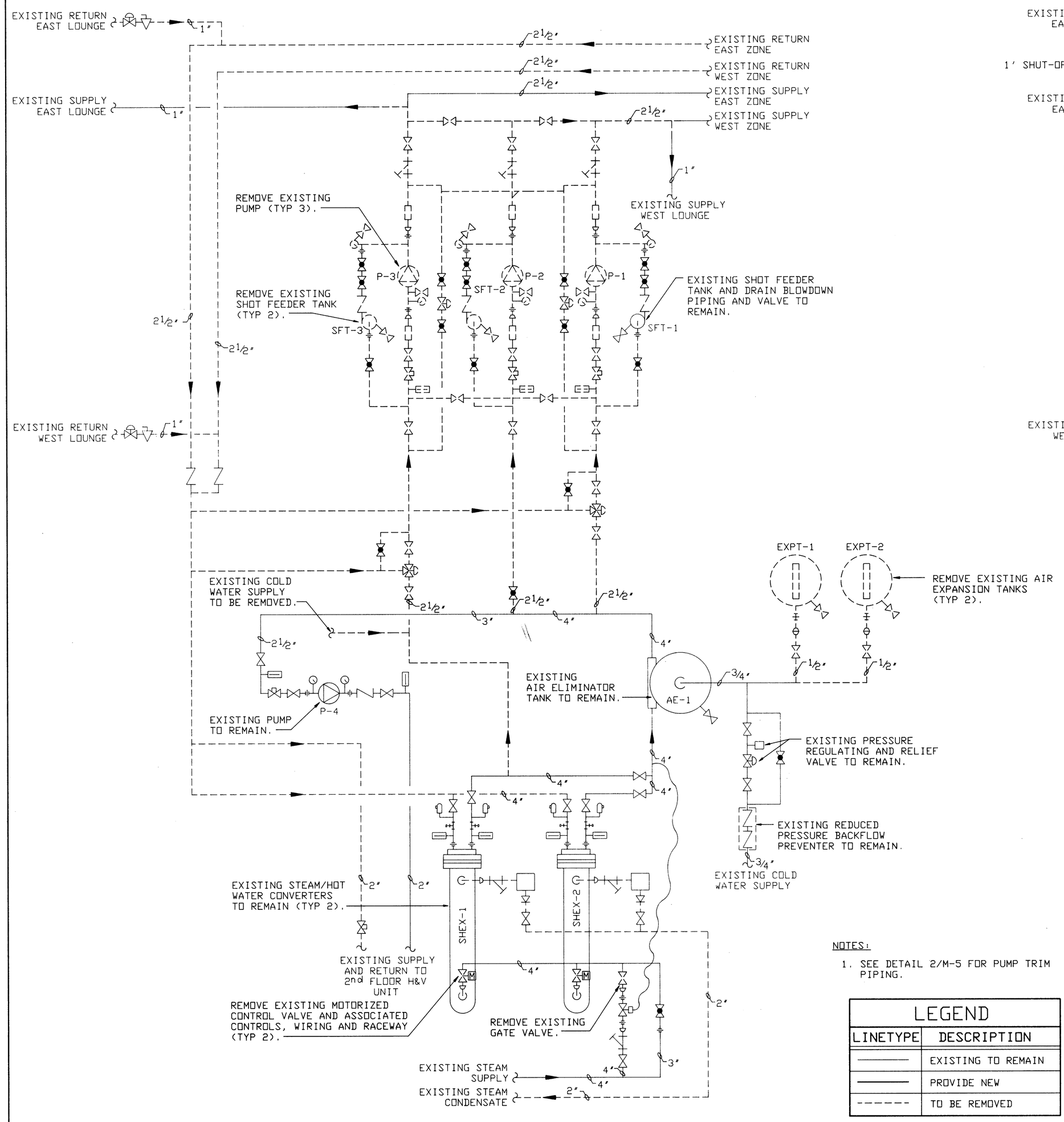

EXISTING MECHANICAL ROOM SCHEMATIC PIPING DEMOLITION DETAIL

NOT TO SCALE

NOTES:

1. SEE DETAIL 2/M-5 FOR PUMP TRIM PIPING.

LEGEND	
LINETYPE	DESCRIPTION
———	EXISTING TO REMAIN
———	PROVIDE NEW
- - - - - -	TO BE REMOVED

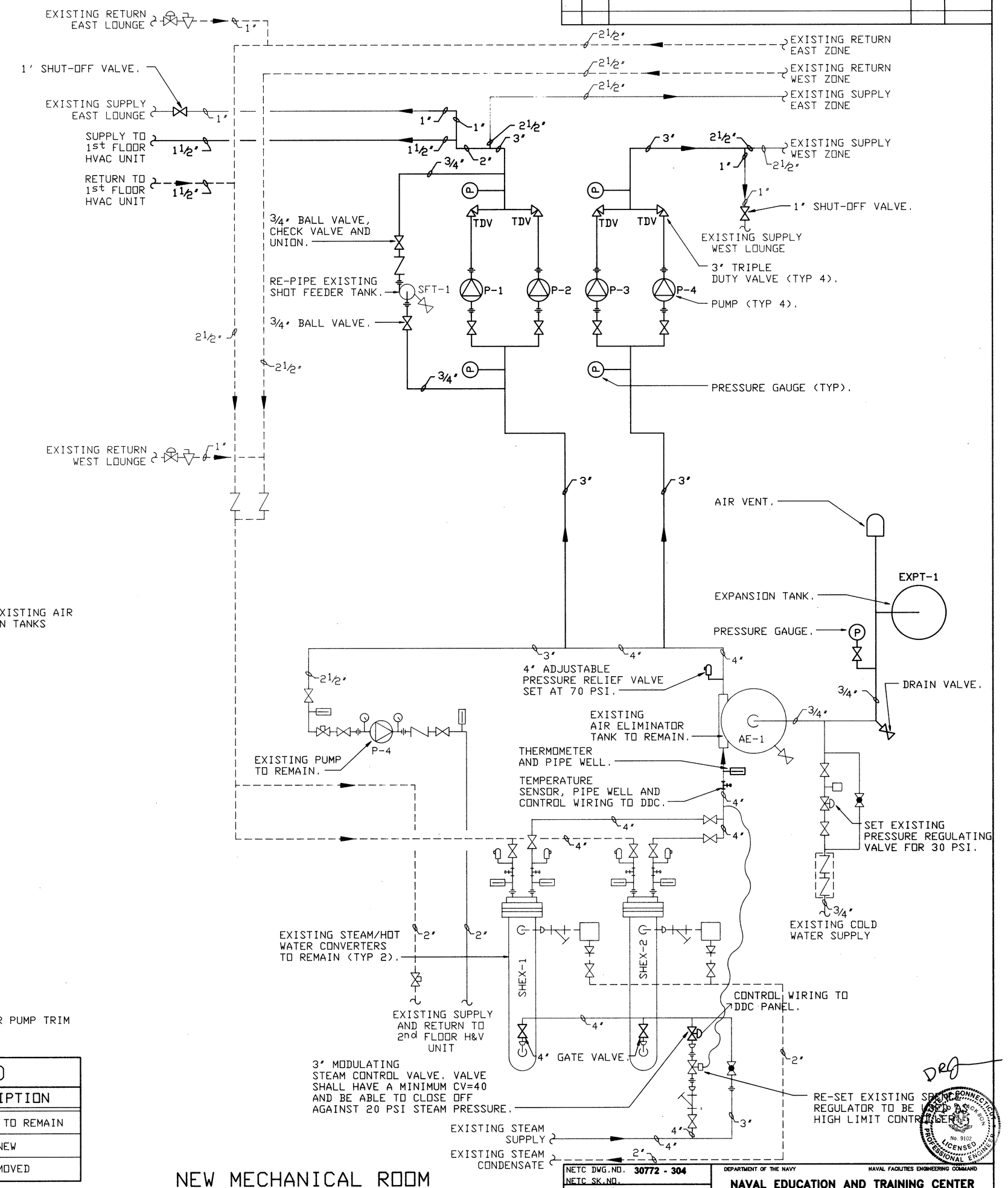

NEW MECHANICAL ROOM SCHEMATIC PIPING DETAIL

NOT TO SCALE

APPLIED THERMODYNAMICS ASSOCIATES, INC.
CONSULTING ENGINEERS
203-456-4554
10 HIGGINS HIGHWAY - SUITE 10 MANSFIELD CENTER, CT 06250

NETC DWG.NO. 30772 - 304	DEPARTMENT OF THE NAVY — NAVAL FACILITIES ENGINEERING COMMAND
NETC SK.NO.	NAVAL EDUCATION AND TRAINING CENTER, NEWPORT, RI.
DSGN. KAS	
DR. KAS	REPAIR AND MODIFICATIONS TO: BUILDING #678
BR. DRJ	
DIR.	
APPROVED / DATE	DWG TITLE: MECHANICAL ROOM PIPING SCHEMATIC DEMOLITION AND NEW WORK
SATISFACTORY TO / DATE 11-22-94	SIZE F · CODE IDENT NO. 80091 · NAVFAC DRAWING NO. 2171457
	CONSTR CONTR. NO. N62472-93-C-1996
	SCALE: AS SHOWN · SPEC. · SHEET M-7 31 OF 44

ATA REF: C:\94113\94113M7 10/05/94 14:29

REVISIONS				
SYM	ZONE	DESCRIPTION	DATE	APPR.

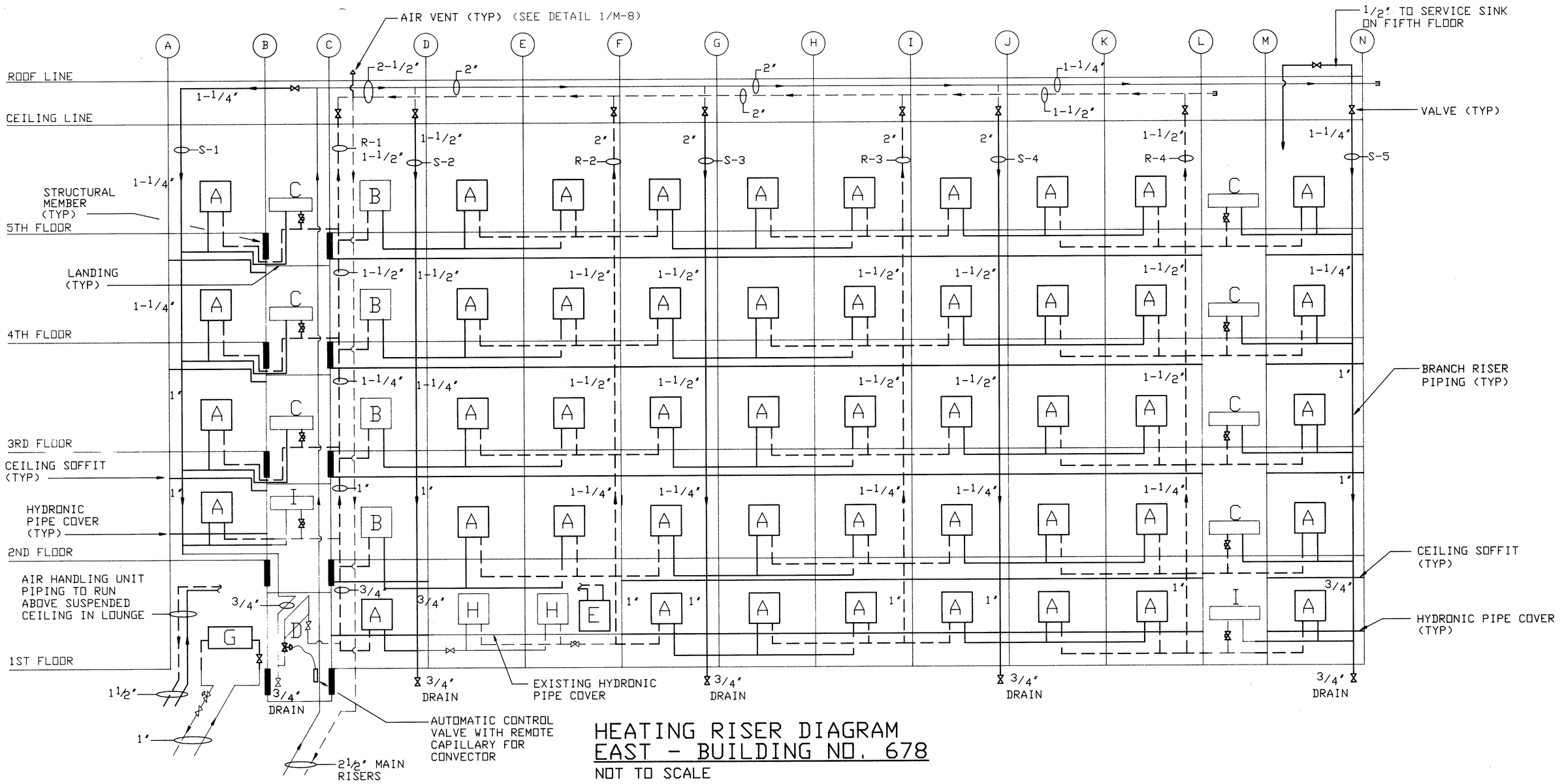

HEATING RISER DIAGRAM
EAST - BUILDING NO. 678
NOT TO SCALE

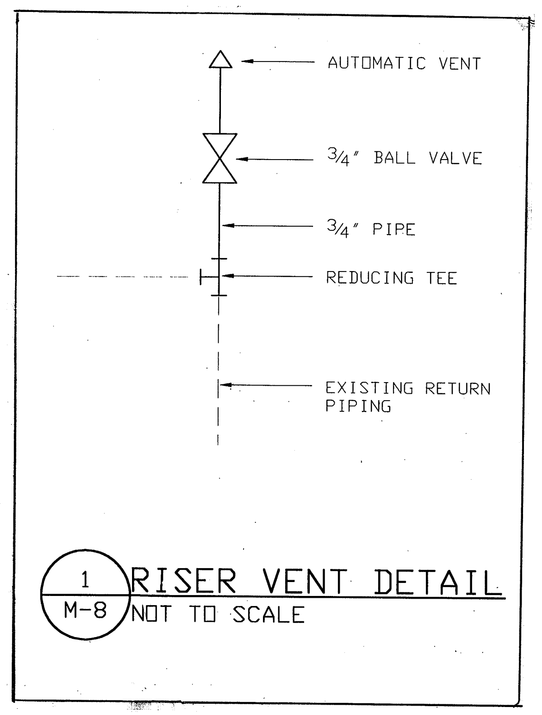

1 / M-8 RISER VENT DETAIL
NOT TO SCALE

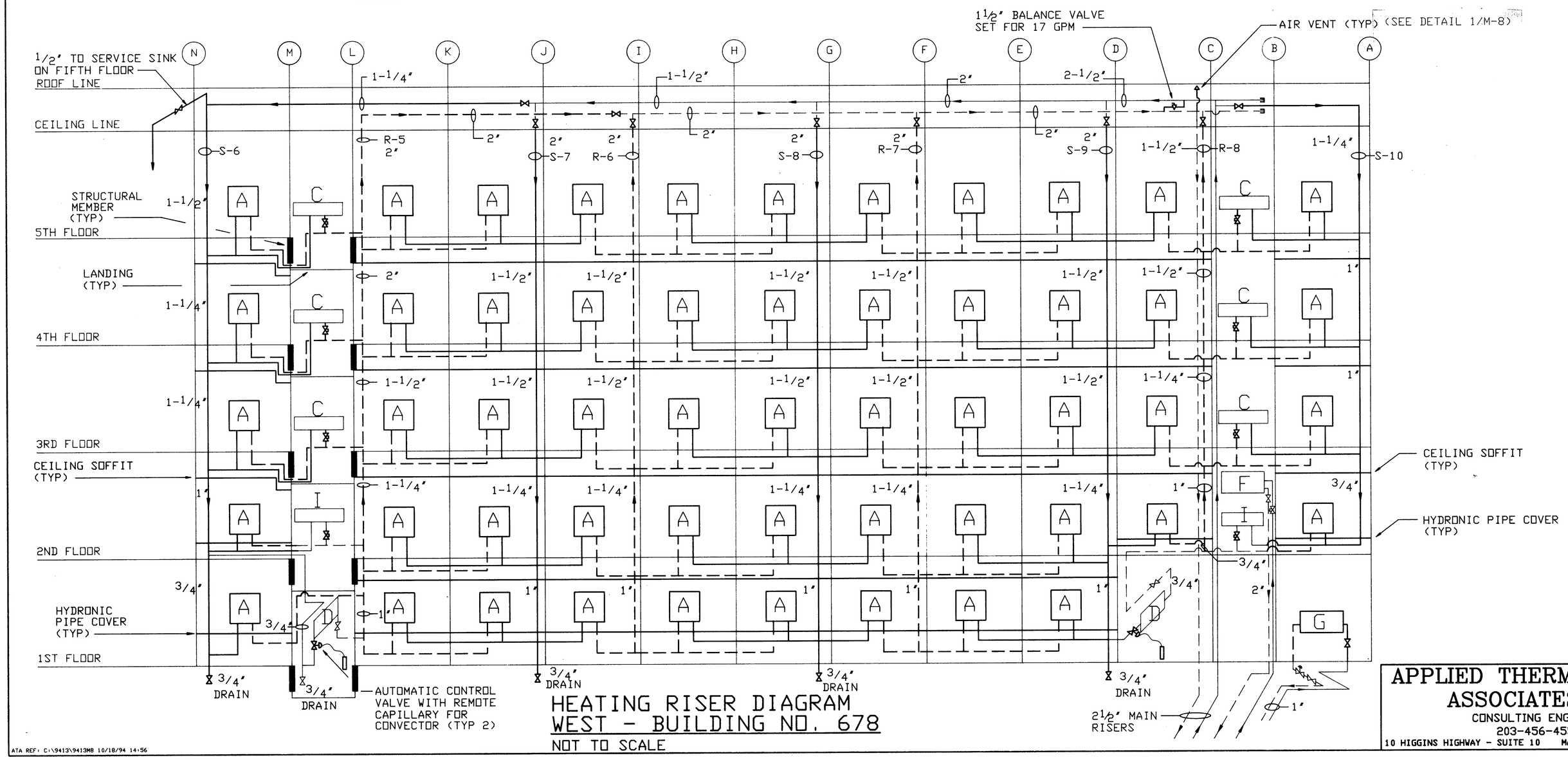

HEATING RISER DIAGRAM
WEST - BUILDING NO. 678
NOT TO SCALE

NOTES:
1. COPPER BRANCH RISER PIPING, VALVES, AND TRIM AS SHOWN.
2. COPPER BRANCH PIPING, VALVES, AND TRIM AS SHOWN.
3. BRANCH RISERS TO BE INSTALLED IN REMOVED RISERS' LOCATIONS.
4. REPLACE ALL AIR VENTS.
5. PROVIDE DIELECTRIC UNION AT ALL DISSIMILAR METAL CONNECTIONS.
6. S-# : BRANCH RISER - SUPPLY
   R-# : BRANCH RISER - RETURN

UNIT IDENTIFICATION AND
HYDRONIC HEATING WATER FLOW RATES (GPM):

A: PTAC UNIT : 1.5 GPM EA.
B: EXISTING FAN COIL UNIT : 0.9 GPM EA.
C: EXISTING FINTUBE RADIATION : 0.8 GPM EA.
D: EXISTING CONVECTOR : 1.2 GPM EA.
E: LOUNGE AHU : 17.0 GPM
F: EXISTING 2ND FLOOR AHU : EXISTING PUMP SETTINGS TO REMAIN.
G: LOUNGE RADIATION : 5.5 GPM
H: EXISTING FAN COIL UNIT : 0.9 GPM EA.
I: EXISTING FINTUBE RADIATION : 0.8 GPM EA.

STATE OF CONNECTICUT · DAVID W. JACKSON · No. 9102 · LICENSED PROFESSIONAL ENGINEER

APPLIED THERMODYNAMICS ASSOCIATES, INC.
CONSULTING ENGINEERS
203-456-4554
10 HIGGINS HIGHWAY - SUITE 10 MANSFIELD CENTER, CT 06250

NETC DWG.NO. 30773 - 304	DEPARTMENT OF THE NAVY — NAVAL FACILITIES ENGINEERING COMMAND
NETC SK.NO.	NAVAL EDUCATION AND TRAINING CENTER, NEWPORT, RI.
DSGN. DLS	
DR. DLS	REPAIR AND MODIFICATIONS TO: BUILDING #678
BR. DRJ	
DIR.	
APPROVED / DATE	DWG TITLE: HYDRONIC PIPING RISER DETAIL
SATISFACTORY TO / DATE 11-22-94	SIZE F · CODE IDENT NO. 80091 · NAVFAC DRAWING NO. 2171458
	CONSTR CONTR. NO. N62472-93-C-1996
	SCALE: AS SHOWN · SPEC. · SHEET M-8 32 OF 44

ATA REF: C:\9413\9413M8 10/18/94 14:56

REVISIONS				
SYM	ZONE	DESCRIPTION	DATE	APPR.

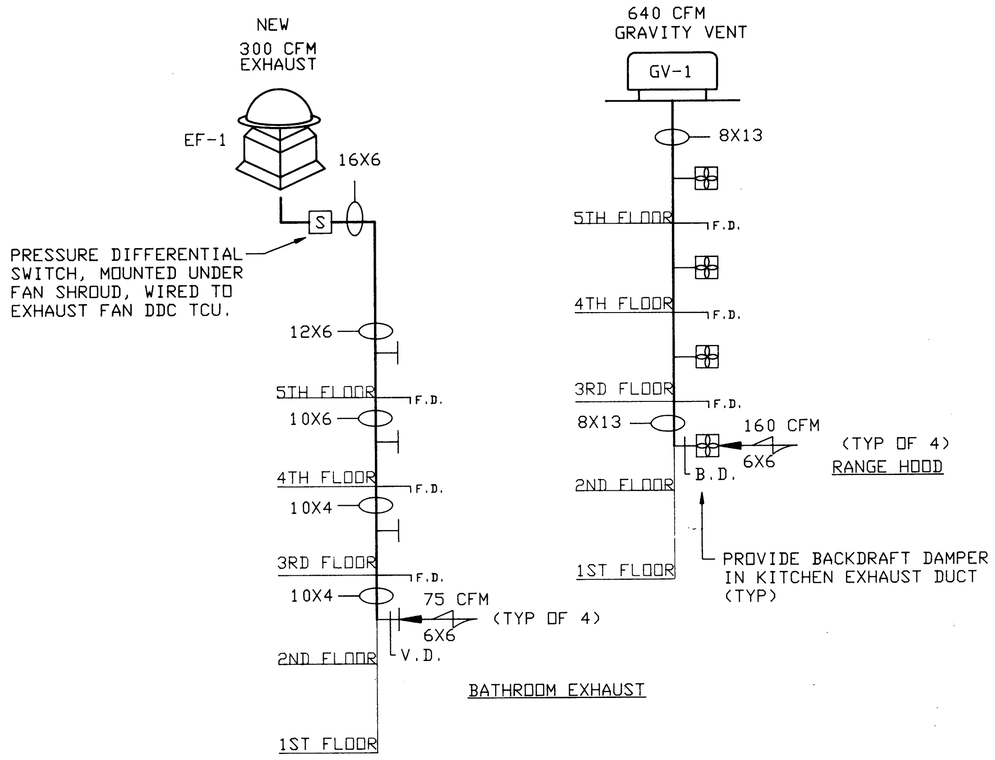

EXHAUST FAN ONE AND KITCHEN EXHAUST RISER DIAGRAM

NOT TO SCALE

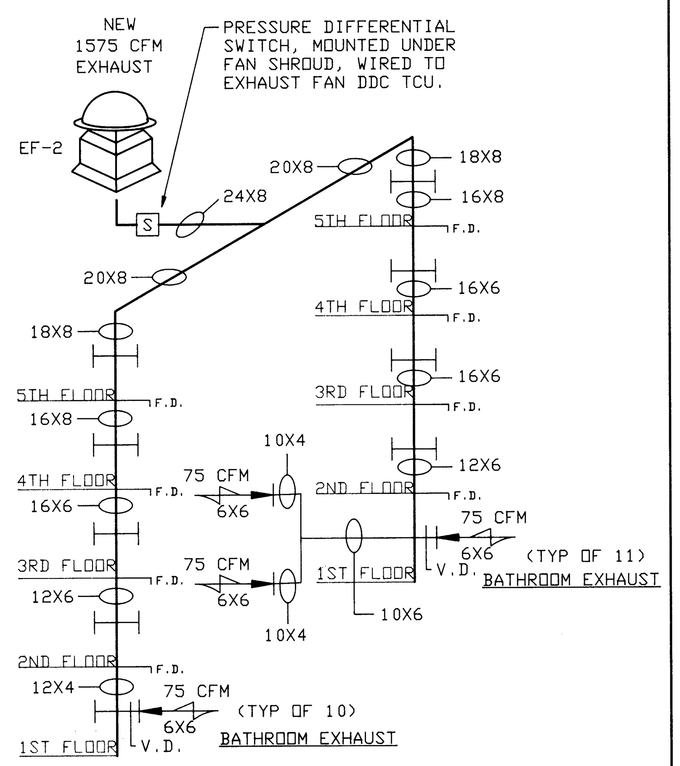

EXHAUST FAN TWO RISER DIAGRAM

NOT TO SCALE

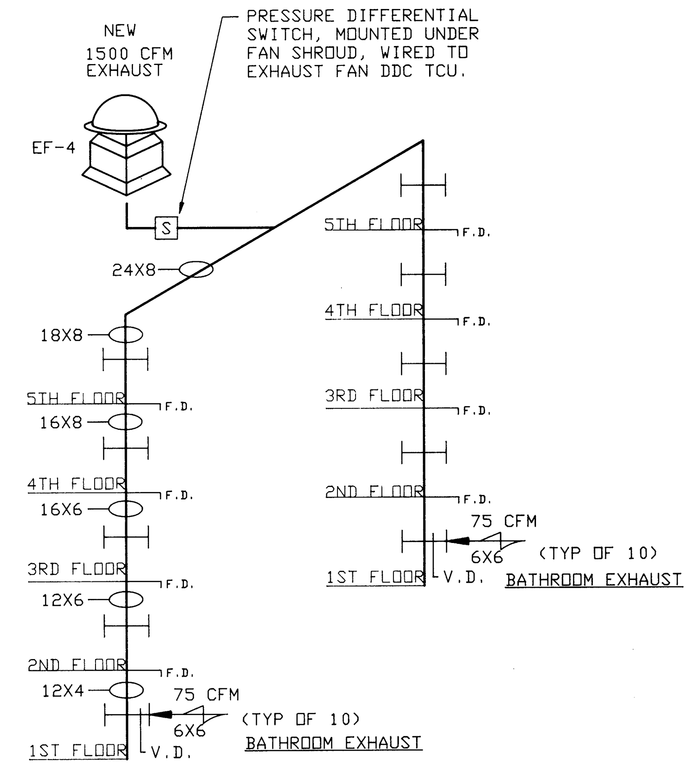

EXHAUST FAN FOUR RISER DIAGRAM

NOT TO SCALE

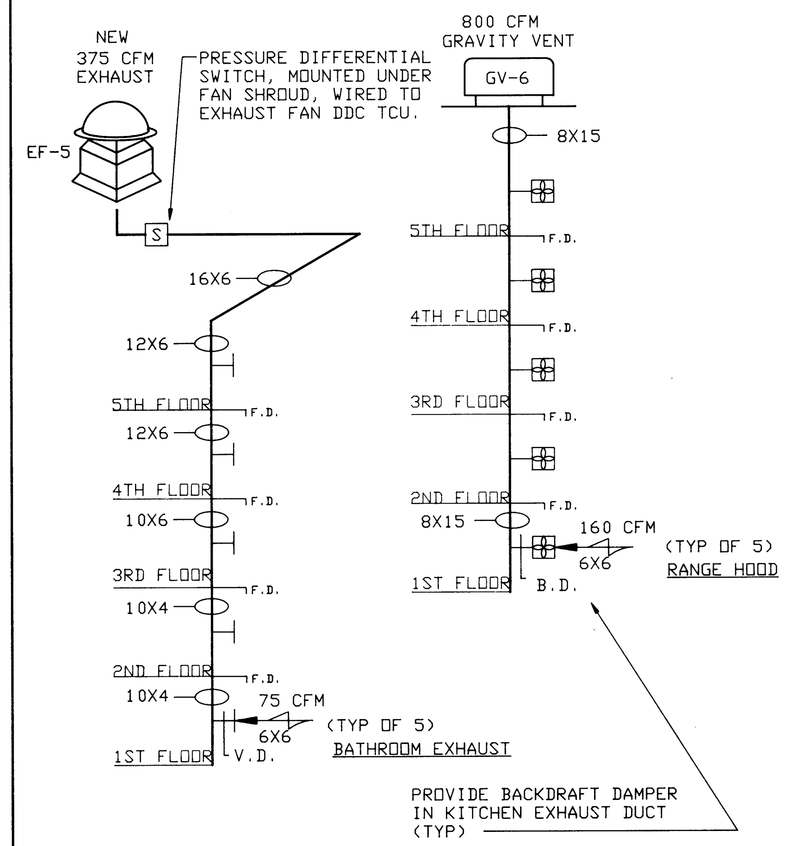

EXHAUST FAN FIVE AND KITCHEN EXHAUST RISER DIAGRAM

NOT TO SCALE

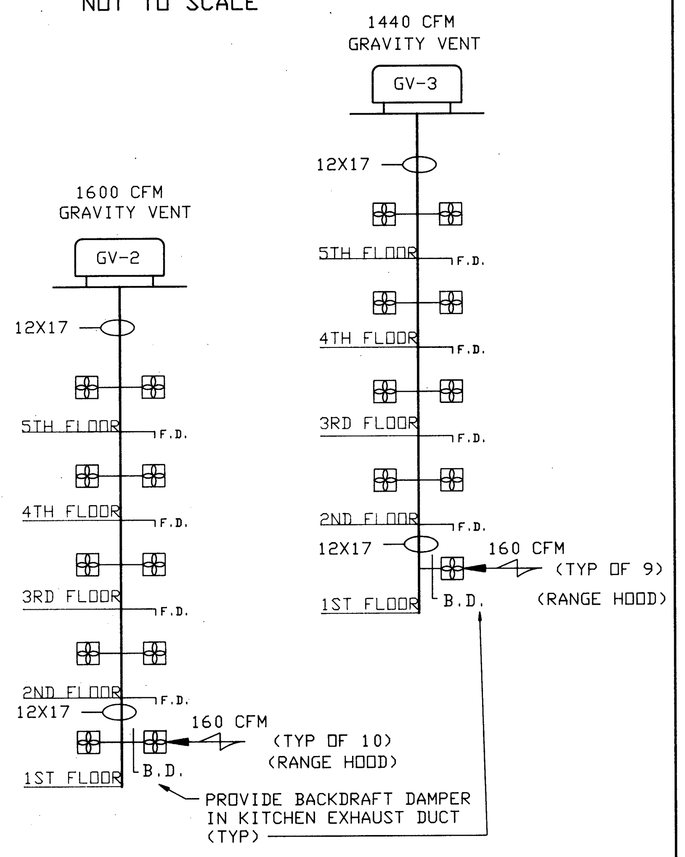

(DUCT TO RUN IN SAME CHASE AS EF-2 DUCT)

KITCHEN EXHAUST FAN RISER DIAGRAM

NOT TO SCALE

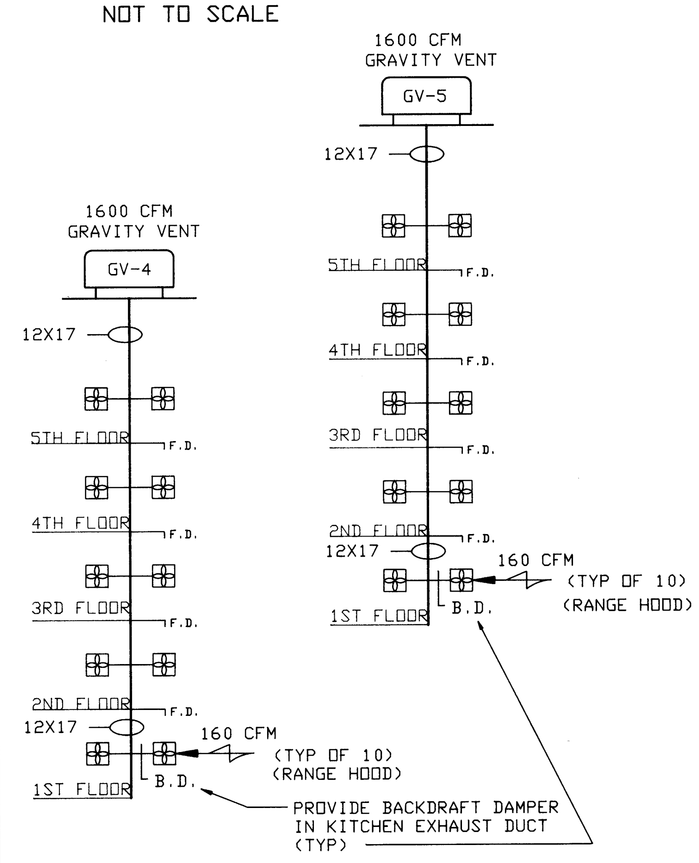

(DUCT TO RUN IN SAME CHASE AS EF-4 DUCT)

KITCHEN EXHAUST FAN RISER DIAGRAM

NOT TO SCALE

7-29-94

APPLIED THERMODYNAMICS ASSOCIATES, INC.
CONSULTING ENGINEERS
203-456-4554
10 HIGGINS HIGHWAY - SUITE 10 MANSFIELD CENTER, CT 06250

DRG

STATE OF CONNECTICUT — DAVID R. JACKSON — No. 9102 — LICENSED PROFESSIONAL ENGINEER

NETC DWG.NO. 30774 - 304	DEPARTMENT OF THE NAVY	NAVAL FACILITIES ENGINEERING COMMAND	
NETC SK.NO.	NAVAL EDUCATION AND TRAINING CENTER NEWPORT, RI.		
DSGN. DLS			
DR. DLS	REPAIR AND MODIFICATIONS TO: BUILDING #678		
BR. DRJ			
DIR.			
APPROVED / DATE	DWG TITLE: KITCHEN AND TOILET EXHAUST FAN RISER DETAIL		
SATISFACTORY TO	SIZE: F	CODE IDENT NO.: 80091	NAVFAC DRAWING NO.: 2171459
DATE 11-22-94	SCALE: AS SHOWN	SPEC.	CONSTR CONTR. NO. N62472-93-C-1996
			SHEET M-9 33 OF 44

ATA REF: C:\9413\9413M9 08/09/94 15:37

REVISIONS				
SYM	ZONE	DESCRIPTION	DATE	APPR.

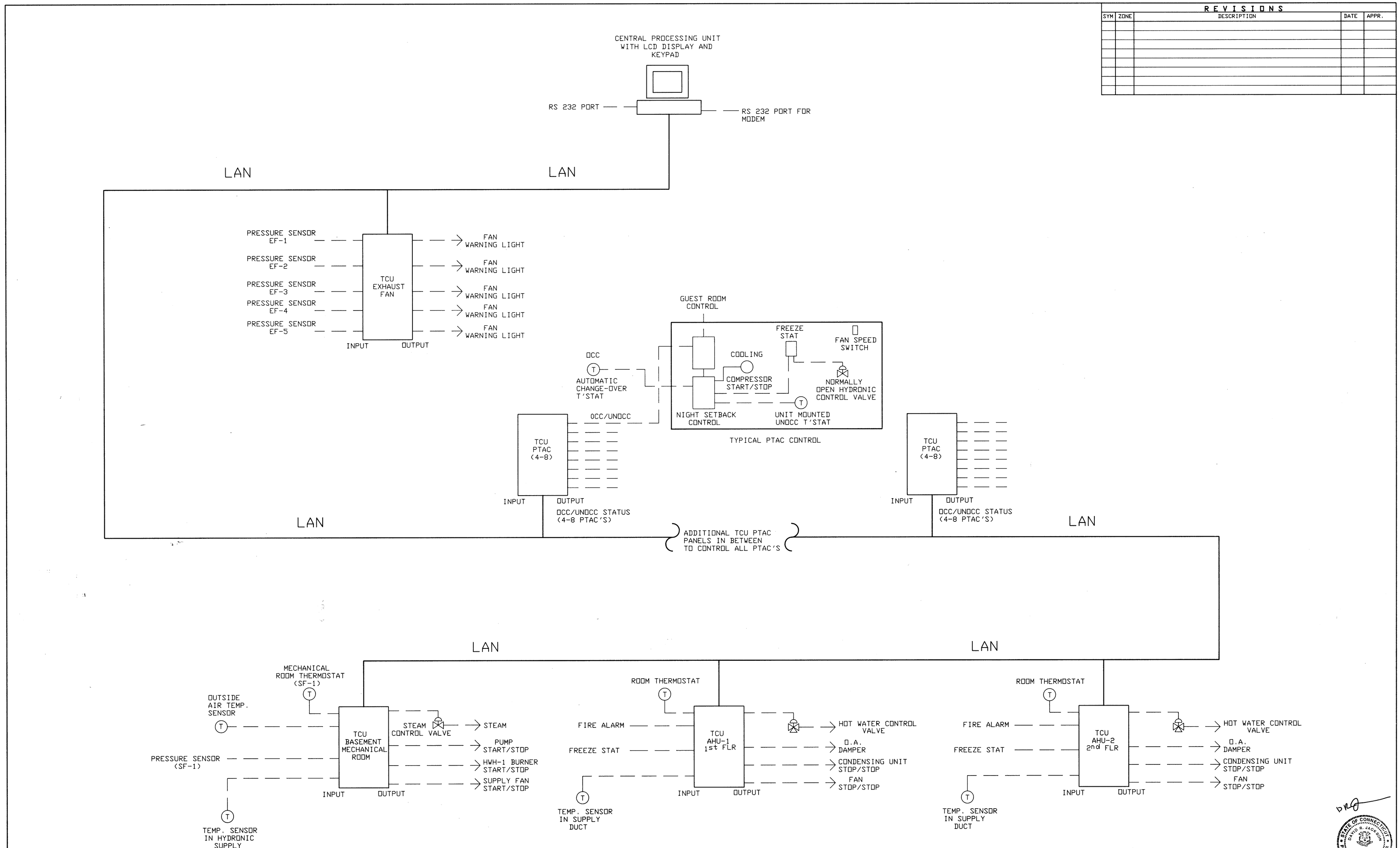

DDC SYSTEM ARCHITECTURE

NOT TO SCALE

7-29-94

APPLIED THERMODYNAMICS ASSOCIATES, INC.
CONSULTING ENGINEERS
203-456-4554
10 HIGGINS HIGHWAY - SUITE 10 MANSFIELD CENTER, CT 06250

NETC DWG.NO. 30775 - 304	DEPARTMENT OF THE NAVY — NAVAL FACILITIES ENGINEERING COMMAND
NETC SK.NO.	NAVAL EDUCATION AND TRAINING CENTER, NEWPORT, RI.
DSGN. KAS	
DR. KAS	REPAIR AND MODIFICATIONS TO: BUILDING #678
BR. DRJ	
DIR.	
APPROVED / DATE	DWG TITLE: DDC SYSTEM ARCHITECTURE
SATISFACTORY TO	SIZE F · CODE IDENT NO. 80091 · NAVFAC DRAWING NO. 2171460
DATE 11-22-94	CONSTR CONTR. NO. N62472-93-C-1996
	SCALE: AS SHOWN · SPEC. · SHEET M-10 OF 44

ATA REF: C:\94123\94123M10 08/09/94 15:39

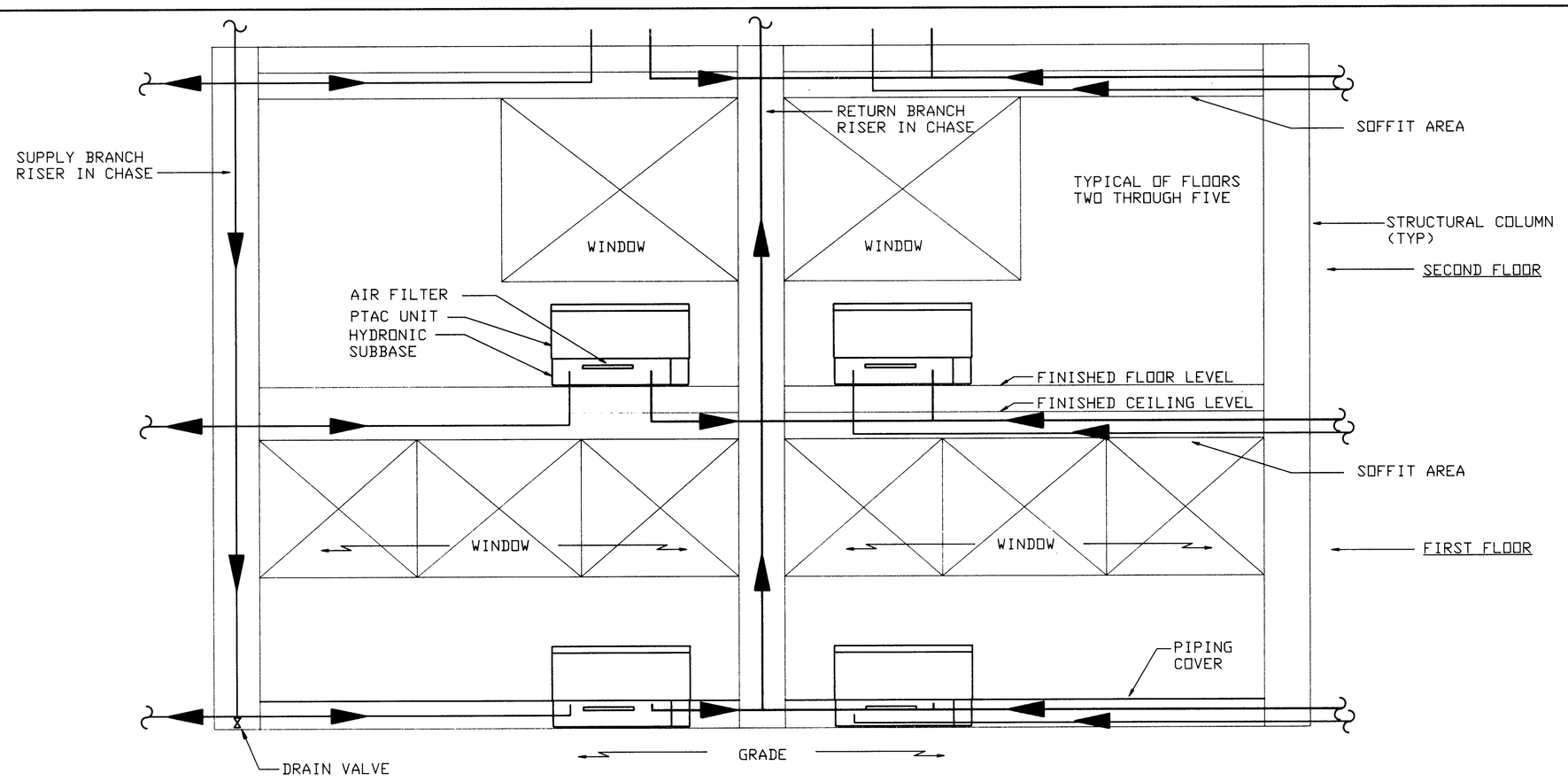

SEE ARCHITECTURAL DRAWING A-7 FOR SECTION VIEW

2 / M-11 TYPICAL 1ST-5TH FLOOR APT. PTAC ELEVATION VIEW

SCALE: 1/2" = 1' - 0"

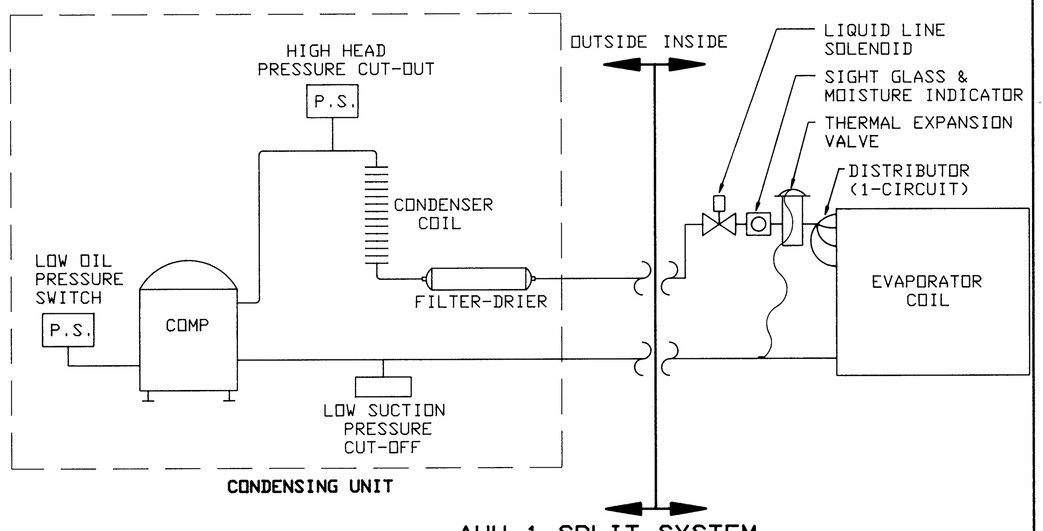

2 / M-11 AHU-1 SPLIT SYSTEM PIPING SCHEMATIC

NOT TO SCALE

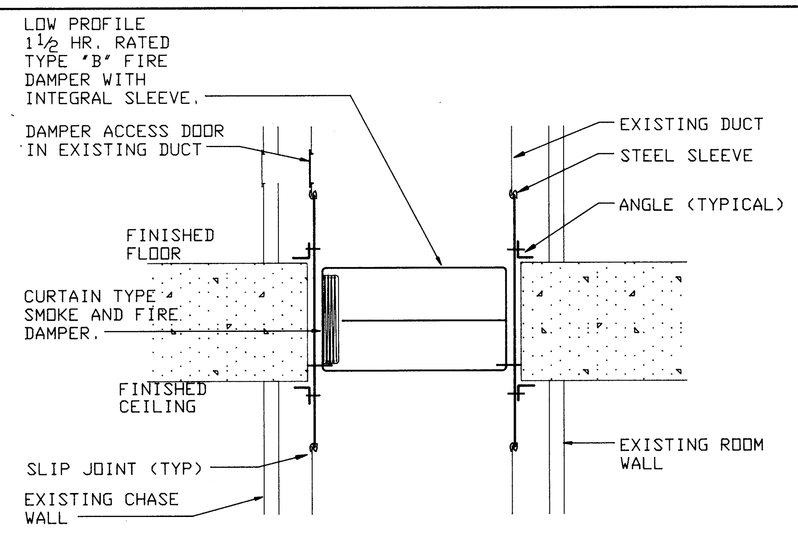

3 / M-11 TYPICAL FIRE SMOKE DAMPER INSTALLATION DETAIL

NOT TO SCALE

NOTE:

SEE MECHANICAL DRAWINGS FOR PIPING

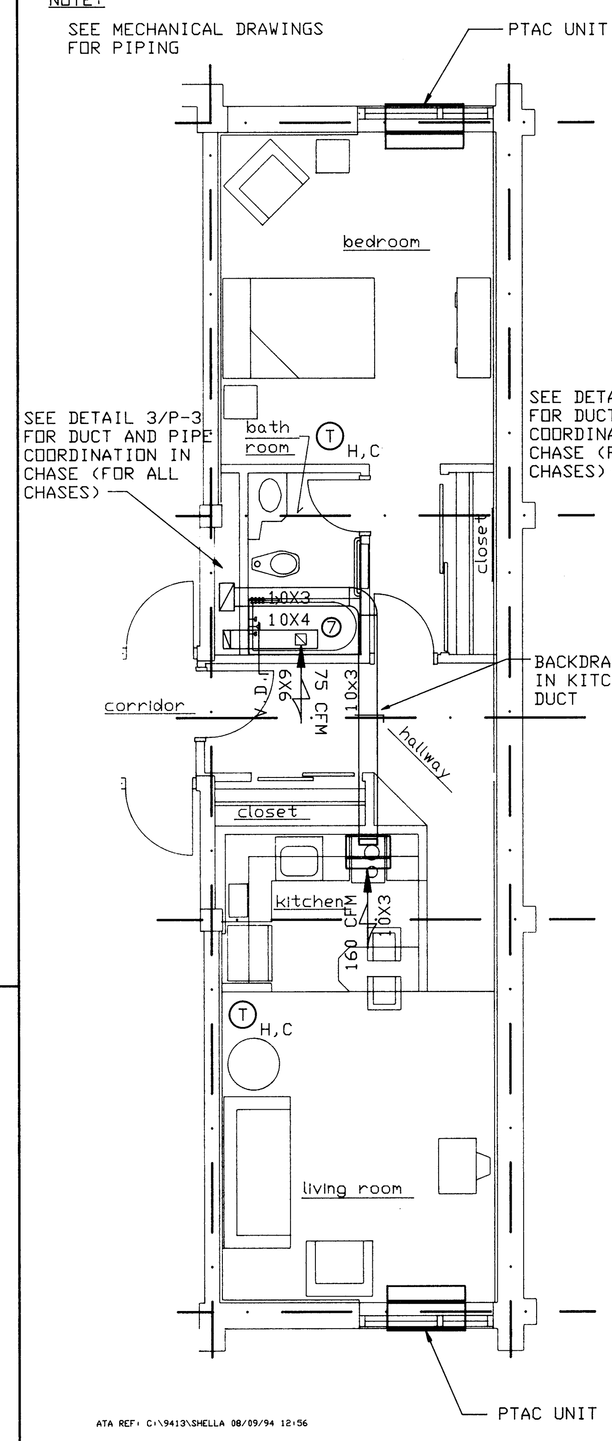

ATA REF: C:\9413\SHELLA 08/09/94 12:56

UNIT A

SCALE: 1/4" = 1' - 0"

SCALE IN FEET 4 0 4 8

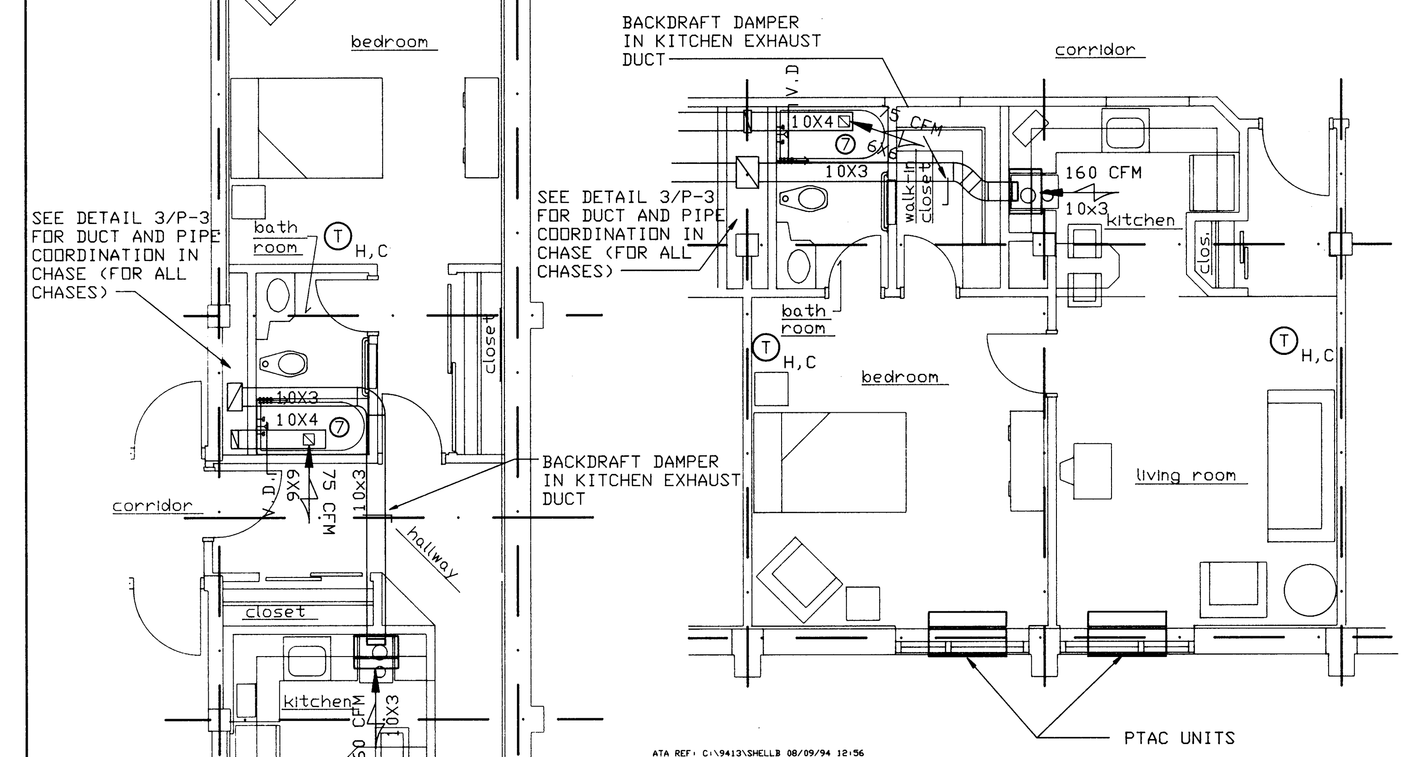

ATA REF: C:\9413\SHELLB 08/09/94 12:56

UNIT B

SCALE: 1/4" = 1' - 0"

SCALE IN FEET 4 0 4 8

4 / M-11 TYPICAL UNITS PLAN VIEWS

NOT TO SCALE

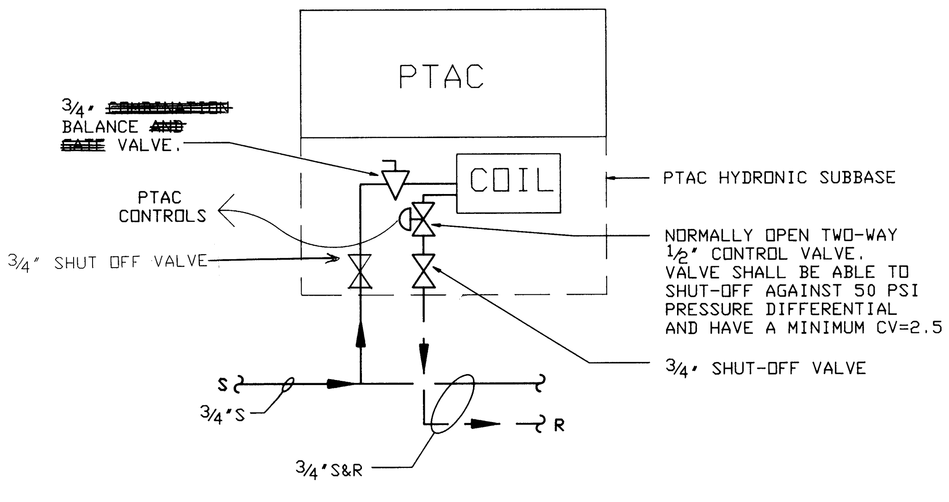

5 / M-11 TYPICAL PTAC PIPING DETAIL

NOT TO SCALE

ATA REF: C:\9413\9413M11 10/07/94 13:16

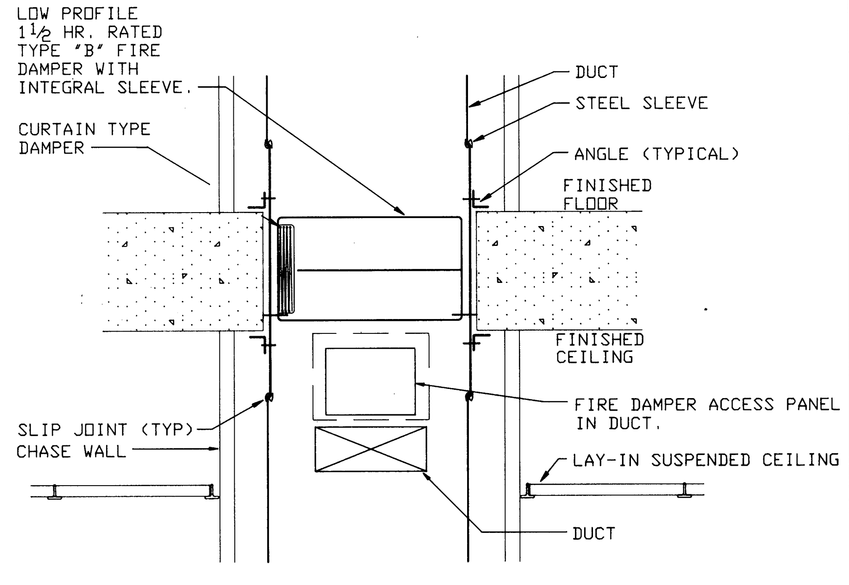

6 / M-11 TYPICAL FIRE DAMPER INSTALLATION DETAIL

NOT TO SCALE

REVISIONS				
SYM	ZONE	DESCRIPTION	DATE	APPR.

APPLIED THERMODYNAMICS ASSOCIATES, INC.
CONSULTING ENGINEERS
203-456-4554
10 HIGGINS HIGHWAY - SUITE 10 MANSFIELD CENTER, CT 06250

NETC DWG.NO. 30776 - 304	DEPARTMENT OF THE NAVY — NAVAL FACILITIES ENGINEERING COMMAND
NETC SK.NO.	NAVAL EDUCATION AND TRAINING CENTER NEWPORT, RI.
DSGN. KAS	
DR. DLS	REPAIR AND MODIFICATIONS TO: BUILDING #678
BR. DRJ	
DIR.	
APPROVED / DATE	DWG TITLE: MECHANICAL DETAILS AND TYPICAL ROOM PLAN VIEWS
SATISFACTORY TO / DATE 11-22-94	SIZE F · CODE IDENT NO. 80091 · NAVFAC DRAWING NO. 2171461
	CONSTR CONTR. NO. N62472-93-C-1996
	SCALE: AS SHOWN · SPEC. · SHEET M-11 35OF44

AIR HANDLING UNIT SCHEDULE

SYMBOL	TOTAL CFM	MIN. O.A. CFM	TOTAL S.P. IN WG	COOLING COIL (DX)							HOT WATER HEATING COIL							SUPPLY FAN	
				EDB	EWB	LDB	TOTAL MBH	SENS. MBH	ROWS	FPI	EAT	LAT	AWT	TOTAL MBH	GPM	ROWS	FPI	HP	V/ø
AHU-1	2,400	800	0.75	80°	68°	55.3°	92.0	63.0	3	12	45°	104°	170°	165.9	17	2	111	1.5	208/3

1. UNIT SHALL BE BELT DRIVEN MOUNTED IN VERTICAL POSITION. BLOWER AND FILTER PANELS SHALL BE ACCESSIBLE FROM SIDE OF UNIT. HEATING COIL SHALL BE IN REHEAT POSITION.
2. UNIT SHALL HAVE 1" THROWAWAY FILTERS.
3. MOTOR SHALL HAVE INTERNAL THERMAL OVERLOAD PROTECTION.
4. UNITS SHALL BE SUSPENDED FROM STRUCTURAL FRAMING ATTACHED TO BUILDING STRUCTURE UTILIZING THREADED RODS.
5. FAN MOTOR SHALL BE MOUNTED WITHIN THE UNIT, AND FAN AND MOTOR SHALL BE INTERNALLY VIBRATION ISOLATED FROM UNIT. BELT DRIVE SHALL BE VARIABLE PITCH TYPE.
6. POWER WIRING AND DISCONNECT BY DIVISION 16.

AIR-COOLED CONDENSING UNIT SCHEDULE

SYMBOL	NOMINAL CAPACITY TONS	EER (1)	SUCTION CONNECTION	LIQUID CONNECTION	ELECTRICAL		
					VOLTS	ø	MCA
CU-1	7.5	8.9	1 3/8"	1/2"	208	3	36.7

(1) COMBINED RATING WITH SPECIFIED AHU.

NOTES:
1. PROVIDE THE FOLLOWING OPTIONS:
   1. TIME DELAY RELAY
   2. ANTI-SHORT-CYCLE TIMER
   3. CONDENSER COIL GUARD
   4. STANDARD UNIT SHALL OPERATE TO 35° F
2. PROVIDE LIQUID LINE SOLENOID VALVES AND SUCTION LINE ACCUMULATORS AS RECOMMENDED BY MANUFACTURER.
3. UNIT SHALL BE FACTORY WIRED WITH NECESSARY CONTROLS.
4. CONTROL WIRING SHALL BE 24 VOLT CONTROL CIRCUIT WHICH INCLUDES FUSING AND CONTROL TRANSFORMER.
5. UNITS SHALL PROVIDE EXTERNAL LOCATION FOR MOUNTING A FUSED DISCONNECT DEVICE.

GRILLE AND DIFFUSER SCHEDULE

SYMBOL	DESCRIPTION	STYLE	CONSTRUCTION	DAMPER
1	SIDEWALL SUPPLY GRILLE	DOUBLE DEFLECTION	EXTRUDED ALUMINUM	———
2	CEILING MOUNTED SUPPLY DIFFUSER	4-WAY	EXTRUDED ALUMINUM	———
3	WALL MOUNTED RETURN GRILLE	FIXED BLADE	EXTRUDED ALUMINUM	———
4	CEILING MOUNTED SUPPLY DIFFUSER	1-WAY	EXTRUDED ALUMINUM	———
5	CEILING MOUNTED SUPPLY DIFFUSER	2-WAY	EXTRUDED ALUMINUM	———
6	CEILING MOUNTED RETURN GRILLE	CUBE CORE 1/2" GRID	ALUMINUM	———
7	CEILING MOUNTED RETURN GRILLE	CUBE CORE 1/2" GRID	ALUMINUM	———
8	SIDEWALL SUPPLY REGISTER	SINGLE DEFLECTION	EXTRUDED ALUMINUM	OPPOSED BLADE

NOTES:
1. NECK SIZES AND CFM AS SHOWN ON DRAWINGS.
2. PROVIDE MODEL TR SQUARE-TO-ROUND TRANSITION FOR TYPES 2, 4, AND 5 DIFFUSERS.
3. PROVIDE OFF-WHITE FINISH FOR ALL GRILLES AND DIFFUSERS.
4. TYPES 2 AND 7 GRILLES AND DIFFUSERS FOR 24" X 24" CEILING GRID.

FAN SCHEDULE

SYMBOL	TYPE	CFM @ S.P.	H.P.	VOLTS	ø	SOUND RATING SONES
EF-1	EXHAUST	300 @ 0.25" W.G.	1/30	115	1	5.1
EF-2	EXHAUST	1575 @ 0.70" W.G.	1/3	115	1	12.6
EF-3	EXHAUST	1200 @ 0.10" W.G.	1/8	115	1	6.5
EF-4	EXHAUST	1500 @ 0.45" W.G.	1/4	115	1	8.9
EF-5	EXHAUST	375 @ 0.25" W.G.	1/20	115	1	5.5
EF-6	EXHAUST	800 @ 0.10" W.G.	1/8	115	1	4.0
EF-7	EXHAUST	800 @ 0.10" W.G.	1/8	115	1	4.0
EF-8	EXHAUST	800 @ 0.10" W.G.	1/8	115	1	4.0
EF-9	EXHAUST	800 @ 0.10" W.G.	1/8	115	1	4.0
SF-1	SUPPLY	1200 @ 0.25" W.G.	1/4	115	1	11.5

NOTES:
1. PROVIDE NEW ROOF CURB AND BACKDRAFT DAMPER FOR EF-1 THROUGH EF-5.
2. PROVIDE HANGING VIBRATION ISOLATORS FOR EF-6 THROUGH EF-9 AND SF-1.
3. ALL FANS SHALL BE U.L. LISTED AND SHALL HAVE INTEGRAL THERMAL OVERLOAD PROTECTION AND INTEGRAL NEMA 1 DISCONNECT SWITCH.
4. WIRING AND RACEWAY BY DIV. 16.
5. PROVIDE FAN MOTOR SHROUD RETAINMENT CABLE FOR EF-1THROUGH 5.

FOR FANS EF-6 THROUGH EF-9 AND SF-1
FAN SHALL BE OF THE CENTRIFUGAL, DIRECT DRIVEN IN-LINE TYPE
FAN WHEEL SHALL BE CENTRIFUGAL BACKWARD INCLINED.
FAN WHEELS SHALL BE STATICALLY AND DYNAMICALLY BALANCED.
FAN MOTORS SHALL BE PERMANENTLY LUBRICATED.
FAN SHALL BEAR THE AMCA CERTIFIED RATINGS SEAL FOR BOTH SOUND AND AIR PERFORMANCE.

FOR FANS EF-1 THROUGH EF-5
ROOF EXHAUST FANS SHALL BE CENTRIFUGAL DIRECT DRIVE TYPE.
FAN WHEEL SHALL BE CENTRIFUGAL BACKWARD INCLINED.
FAN WHEELS SHALL BE STATICALLY AND DYNAMICALLY BALANCED.
FAN HOUSING AND SHROUD SHALL BE CONSTRUCTED OF HEAVY GAUGE ALUMINUM WITH A REGID INTERNAL SUPPORT STRUCTURE.
FAN SHROUD SHALL HAVE A ROLLED BEAD FOR ADDED STRENGTH.
MOTORS SHALL BE MOUNTED OUT OF THE AIRSTREAM ON VIBRATION ISOLATORS
A CONDUIT CHASE SHALL BE PROVIDED THROUGH THE CURB CAP TO THE MOTOR COMPARTMENT FOR EASE OF ELECTRICAL WIRING.
FAN SHALL BEAR THE AMCA CERTIFIED RATINGS SEAL FOR BOTH SOUND AND AIR PERFORMANCE.

REVISIONS

SYM	ZONE	DESCRIPTION	DATE	APPR.

GRAVITY VENTILATOR SCHEDULE

SYMBOL	TYPE	CFM @ S.P.	INTAKE/ RELIEF AREA	THROAT AREA (SQ. FT.)
GV-1	EXHAUST	480 @ 0.04" W.G.	2.52	0.82
GV-2	EXHAUST	1200 @ 0.04" W.G.	4.43	2.25
GV-3	EXHAUST	1080 @ 0.04" W.G.	4.43	2.25
GV-4	EXHAUST	1200 @ 0.04" W.G.	4.43	2.25
GV-5	EXHAUST	1200 @ 0.04" W.G.	4.43	2.25
GV-6	EXHAUST	600 @ 0.04" W.G.	2.57	1.12

NOTES
1. PROVIDE ROOF CURB FOR GV-1 THROUGH GV-6.
2. PROVIDE SHROUD RETAINMENT CABLE FOR GV-1 THROUGH GV-6.
3. VENTILATOR SHALL BE ONE PIECE COVER AND SHROUD
4. VENTILATOR SHALL BE OF ALL ALUMINUM CONSTRUCTION WITH A FORMED EDGE FOR STRENGTH.

MECHANICAL ABBREVIATIONS LIST	
AE	AIR ELIMINATOR
AHU	AIR HANDLING UNIT
BD	BACKDRAFT DAMPER
CPU	CENTRAL PROCESSING UNIT
CFM	CUBIC FEET PER MINUTE
DDC	DIRECT DIGITAL CONTROL
EF	EXHAUST FAN
EXPT	EXPANSION TANK
FLR	FLOOR
GPM	GALLON PER MINUTE
GV	GRAVITY VENT
HP	HORSEPOWER
HVAC	HEATING, VENTILATION, AND AIR CONDITIONING
LCD	LIQUID CRYSTAL DISPLAY
NFPA	NATIONAL FIRE PROTECTION ASSOCIATION
OA	OUTSIDE AIR
OD	OUTSIDE DIAMETER
P	PUMP
PSI	POUNDS PER SQUARE INCH
PTAC	PACKAGE TERMINAL AIR CONDITIONER
R	HYDRONIC RETURN
S	HYDRONIC SUPPLY
SF	SUPPLY FAN
SFT	SHOT FEEDER TANK
SHEX	STEAM/HOT WATER EXCHANGER
TCU	TEMPERATURE CONTROL UNIT
TDV	TRIPLE DUTY VALVE
TYP	TYPICAL

SYMBOL TABLE

SYMBOL	DESCRIPTION
	BALL OR GATE VALVE
	CONTROL VALVE
	BALANCE VALVE
	CHECK VALVE
	PRESSURE RELIEF VALVE
	AIR VENT
M	MOTORIZED DAMPER
F.D.	FIRE DAMPER
V.D.	VOLUME DAMPER
SD	SMOKE DETECTOR
	RADIATION
	DIELECTRIC UNION

SYMBOL TABLE

SYMBOL	DESCRIPTION
	PIPE TURNING DOWN
	PIPE TURNING UP
	TEE W/ PIPE TURNING UP
	TEE W/ PIPE TURNING DOWN
	PIPE TEE
	HYDRONIC WATER SUPPLY PIPE
	HYDRONIC WATER RETURN PIPE
	EXISTING BALANCE VALVE
T H	THERMOSTAT - HEATING ONLY
T C	THERMOSTAT - COOLING ONLY
T H,C	THERMOSTAT - HEAT & COOL
S.D.	SMOKE DAMPER

HOT WATER FIN-TUBE RADIATION SCHEDULE

ELEMENT TYPE	ROWS	BTU/HR/FT*	SIZE	MATERIAL	ENCLOSURE			MOUNTING HEIGHT **
					HEIGHT	WIDTH	MATERIAL	
A	2	1630	1"X3 1/4"X40	COPPER TUBE ALUMINUM ELEMENT	5"	4 1/4"	14 GA. STEEL	8"
B	—	——	——	——	12"	5 5/16"	18 GA. STEEL	12"

*BASED ON AWT = 170°F AND EAT = 65°F.

**MOUNTING HEIGHT FROM FLOOR TO TOP OF ENCLOSURE.

NOTES:
1. SEE DETAIL 3/M-3 ON DRAWING M-3 FOR TYPE A RADIATION.
2. TYPE B SHALL BE ENCLOSURE ONLY FOR USE AS A COVER TO CONCEAL PIPES. ENCLOSURE SHALL BE FLAT TOP STYLE WITHOUT LOUVERS AND OF 4 1/2" DEPTH.
3. ELEMENT LENGTH AND TOTAL OUTPUT AS INDICATED ON DRAWINGS.

PUMP SCHEDULE

SYMBOL	FLOW GPM	HEAD (FT.)	HP	RPM	VOLTS/ø
P-1,2,3,4	107	60	3	1750	208/3

NOTES:
1. PUMPS SHALL BE BASE MOUNTED, SINGLE-STAGE, FLEXIBLE COUPLED END-SUCTION.

PACKAGED TERMINAL AIR CONDITIONER

SYMBOL	COOLING			HYDRONIC HEATING COIL						ELECTRICAL			
	CFM TOTAL/O.A.		MBH TOTAL	CFM TOTAL/O.A.		FLOW GPM	°F EWT	MBH		V/ø	EER	MCA	FUSE HACR
	HIGH	LOW		HIGH	LOW			HIGH	LOW				
1 2	300/75	275/50	11.4	330/75	305/50	1.5	200	18.4	15.6	208/1	9.3	8.3	15

1. PROVIDE WALL SLEEVE. SLEEVE EXTENSION REQ'D FOR 2
2. PROVIDE SEACOAST OPTIONAL ANTI CORROSION PACKAGE
3. PROVIDE HYDRONIC SUB-BASE OR ELECTRICAL/PIPING SUB-BASE IF HYD. COIL NOT ON BOTTOM OF UNIT.
4. PROVIDE ARCHITECTURAL WALL LOUVER WITH CUSTOM PAINT TO MATCH CHIP FURN. BY ARCHITECT.
5. PROVIDE REMOTE WALL T'STAT AND UNIT MOUNTED UNOCCUPIED T'STAT
6. PROVIDE GUEST ROOM CONTROL PACKAGE

DRD

STATE OF CONNECTICUT DAVID R. DRUMM No. 6102 LICENSED PROFESSIONAL ENGINEER

APPLIED THERMODYNAMICS ASSOCIATES, INC.
CONSULTING ENGINEERS
203-456-4554
10 HIGGINS HIGHWAY - SUITE 10 MANSFIELD CENTER, CT 06250

NETC DWG.NO. 30777 - 304
NETC SK.NO.
DSGN. DLS
DR. DLS
BR. DRJ
DIR.
APPROVED DATE
SATISFACTORY TO
DATE 11-22-94

DEPARTMENT OF THE NAVY — NAVAL FACILITIES ENGINEERING COMMAND
NAVAL EDUCATION AND TRAINING CENTER
NEWPORT, RI.

REPAIR AND MODIFICATIONS TO: BUILDING #678

DWG TITLE: MECHANICAL SCHEDULES

SIZE F | CODE IDENT NO. 80091 | NAVFAC DRAWING NO. 2171462
CONSTR CONTR. NO. N62472-93-C-1996
SCALE: AS SHOWN | SPEC. | SHEET M-12 OF 44

ATA REF: C:\9413\9413M12 10/05/94 14:56

REVISIONS				
SYM	ZONE	DESCRIPTION	DATE	APPR.

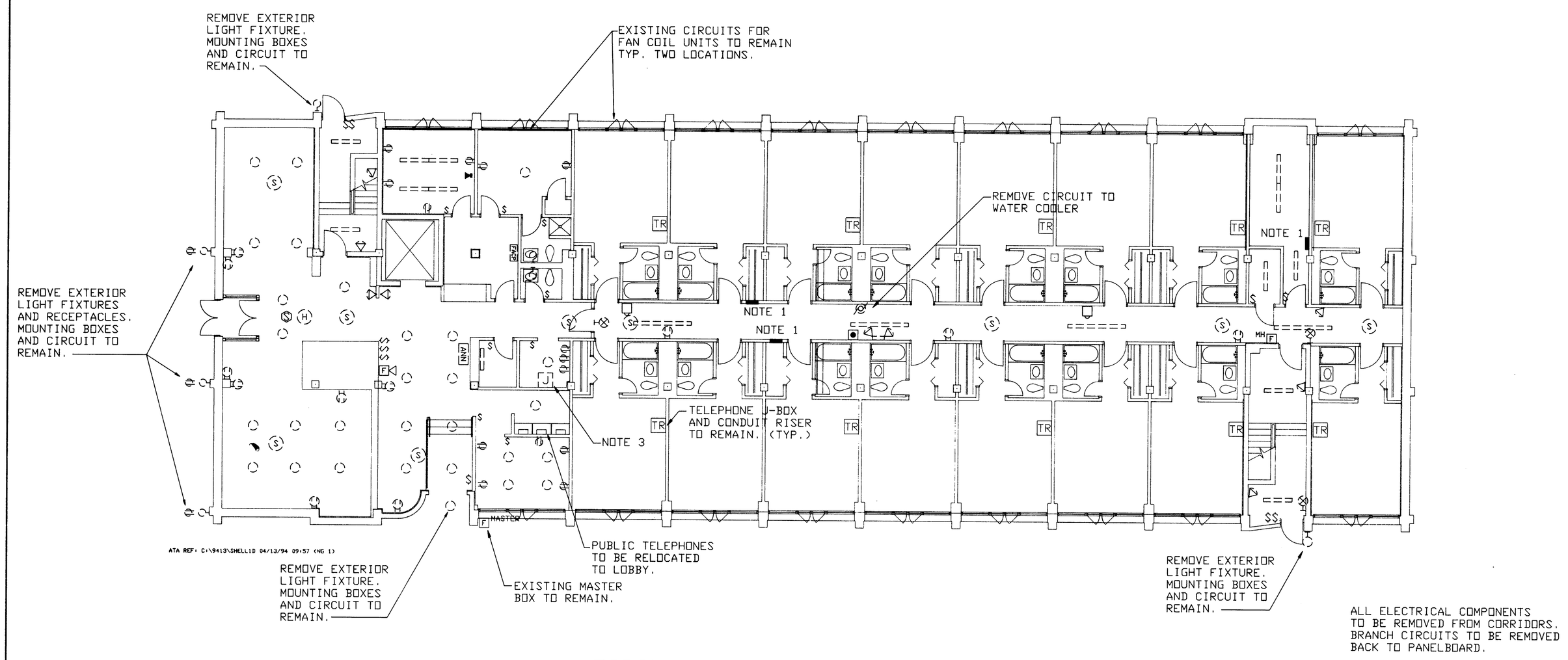

FIRST FLOOR DEMOLITION

SCALE: 1/8" = 1'-0"

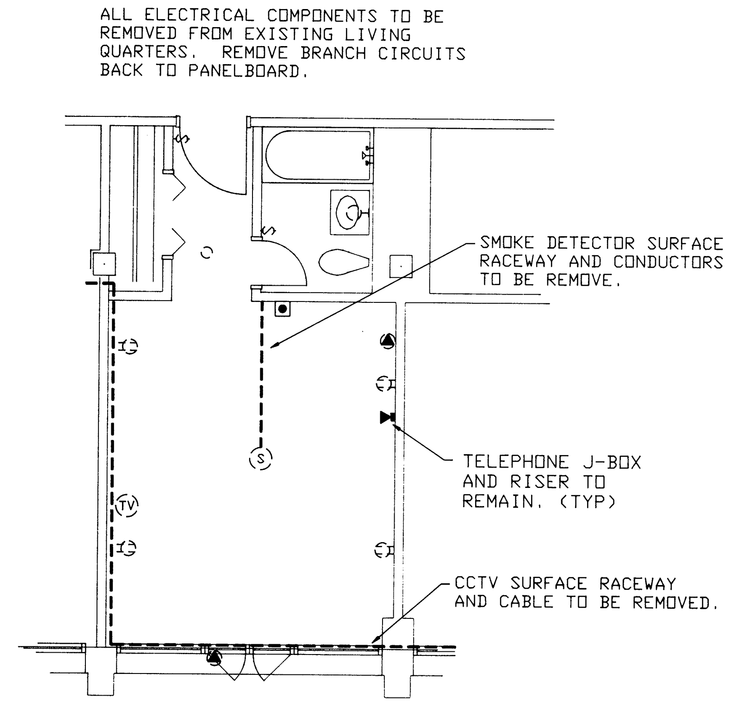

1 / E-1 TYPICAL ROOM DEMOLITION PLAN

SCALE: 1/4" = 1'-0"

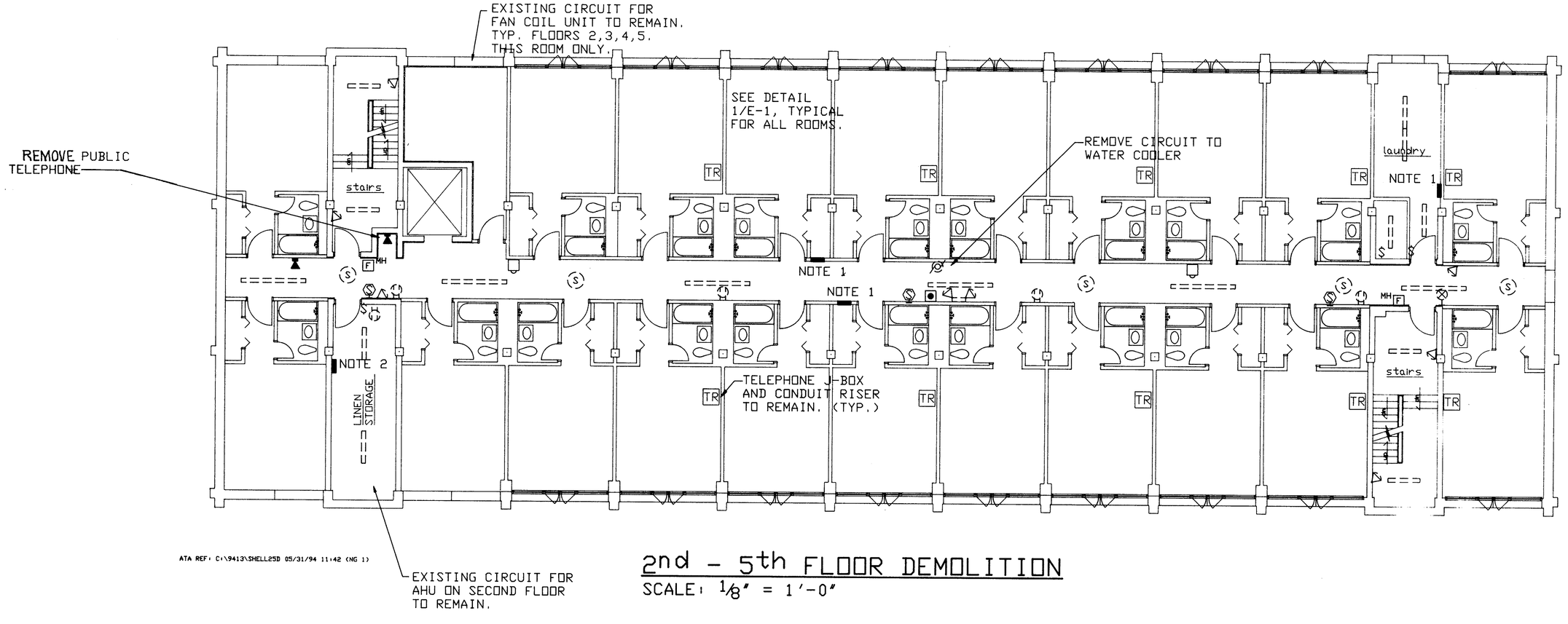

2nd - 5th FLOOR DEMOLITION

SCALE: 1/8" = 1'-0"

DEMOLITION LEGEND

	RECEPTACLE		SPEAKER
	TELEPHONE OUTLET	MH F	MANUAL PULL STATION
TV	CCTV OUTLET	F	HORN/LIGHT ANNUNCIATOR
	BELL	H	HEAT DETECTOR
	MECHANICAL CONNECTION		FLUORESCENT LIGHT
	DOME LIGHT		PUSHBUTTON
S	LIGHT SWITCH		EMERGENCY LIGHT
	WALL LIGHT	FACP	FIRE ALARM CONTROL PANEL
S	SMOKE DETECTOR	ANN	FIRE ALARM ANNUNCIATOR
TR	TELEPHONE RISER TO REMAIN		PANELBOARD
	INCANDESCENT LIGHT		

NOTES:

1. EXISTING ELECTRICAL PANELBOARDS TO BE REMOVED. EXISTING CONDUITS THAT FEED PANELS TO REMAIN. EXISTING CONDUCTORS BETWEEN PANELBOARDS AND EXISTING MDP SHALL BE REMOVED. CIRCUITS REMAINING ON THIS FLOOR TO BE CONNECTED TO NEW PANELBOARDS. SEE SPECIFICATIONS FOR PANELBOARD SCHEDULES AND CIRCUITS THAT REMAIN.

2. EXISTING ELECTRICAL PANELBOARDS TO BE REMOVED. EXISTING CONDUITS THAT FEED PANELS TO REMAIN. EXISTING CONDUCTORS BETWEEN PANELBOARDS AND EXISTING MDP SHALL BE REMOVED. CIRCUITS REMAINING ON THIS FLOOR TO BE CONNECTED TO NEW PANELBOARDS. SEE SPECIFICATIONS FOR PANELBOARD SCHEDULES AND CIRCUITS THAT REMAIN. THIS PANELBOARD ON THIRD FLOOR ONLY.

3. CABLE TV DISTRIBUTION BOX TO BE RELOCATED TO NEW FIRST FLOOR MECHANICAL ROOM. REMOVE WIRING BACK TO J-BOX IN BASEMENT MECHANICAL ROOM.

4. REMOVE TELEPHONE AND FIRE ALARM WIRING BACK TO J-BOX IN BASEMENT MECHANICAL ROOM. REMOVE ALL CONDUIT EXCEPT AS NOTED.

5. ALL CEILING MOUNTED ELECTRICAL COMPONENTS SHALL BE REMOVED AS SHOWN ON DRAWING AS-2. ALL ELECTRICAL COMPONENTS REMAINING IN PLACE AFTER COMPLETION OF ASBESTOS REMOVAL OPERATION SHALL BE REMOVED.

SCALE IN FEET 8 0 8 16

NORTH

APPLIED THERMODYNAMICS ASSOCIATES, INC.
CONSULTING ENGINEERS
203-456-4554
10 HIGGINS HIGHWAY - SUITE 10 MANSFIELD CENTER, CT 06250

NETC DWG.NO. 30778 - 304	DEPARTMENT OF THE NAVY	NAVAL FACILITIES ENGINEERING COMMAND
NETC SK.NO.	NAVAL EDUCATION AND TRAINING CENTER NEWPORT, RI.	
DSGN. ALP		
DR. ALP	REPAIR AND MODIFICATIONS TO: BUILDING #678	
BR. JMC 12/5/94		
DIR.		
APPROVED 7-29-94 DATE	DWG TITLE ELECTRICAL DEMOLITION PLANS FLOORS 1 - 5	
SATISFACTORY TO	SIZE F / CODE IDENT NO. 80091	NAVFAC DRAWING NO. 2171463
DATE 11-22-94		CONSTR CONTR. NO. N62472-93-C-1996
	SCALE: AS SHOWN	SPEC. / SHEET E-1 1/1 OF 44

STATE OF CONNECTICUT MICHAEL L. CALLAHAN No. 14118 LICENSED PROFESSIONAL ENGINEER

ATA REF: C:\9413\9413E1 08/11/94 08:41

REVISIONS				
SYM	ZONE	DESCRIPTION	DATE	APPR.

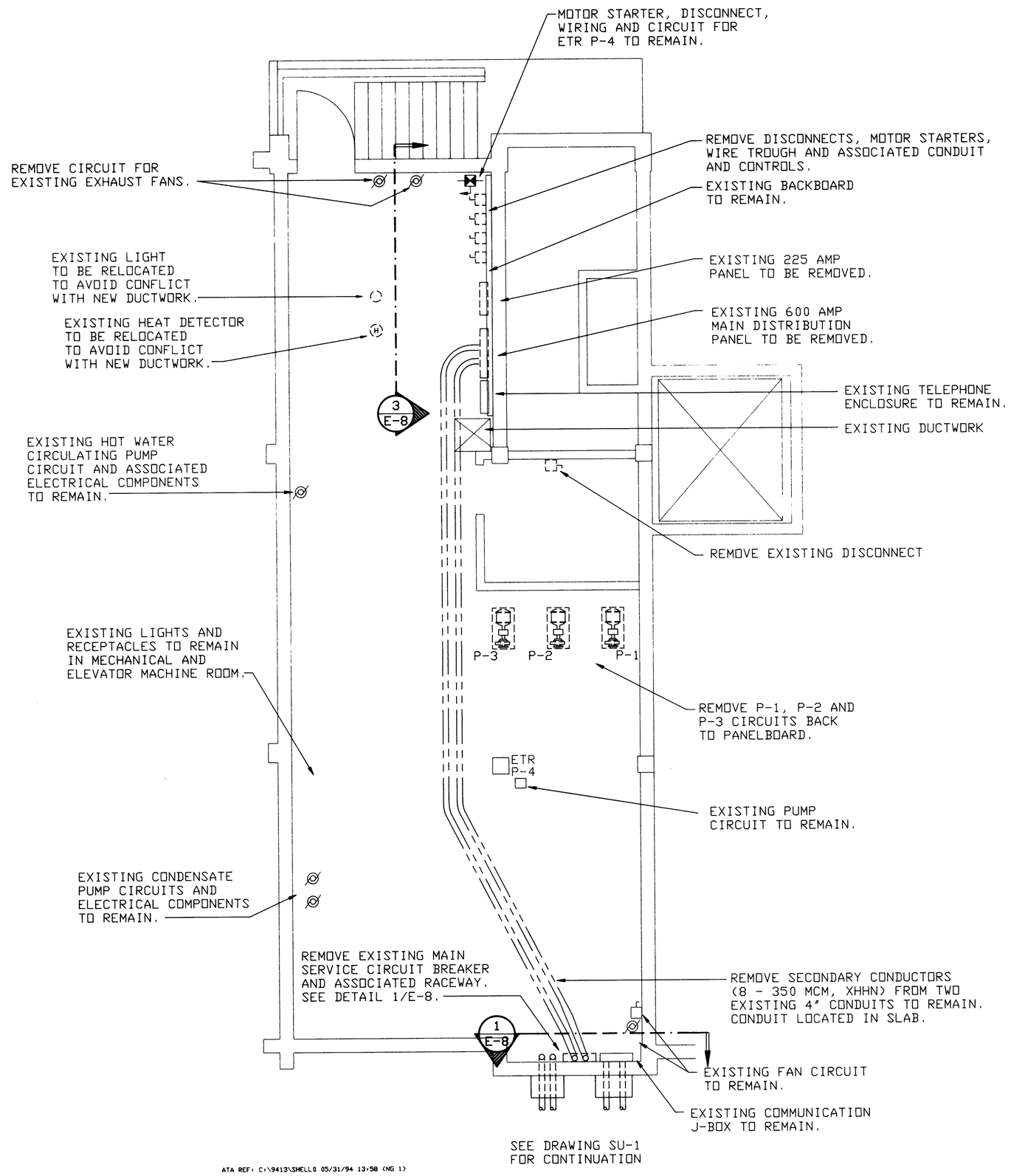

ATA REF: C:\9413\SHELL0 05/31/94 13:50 (NG 1)

MECHANICAL ROOM DEMOLITION PLAN

SCALE: 1/4" = 1' -0"

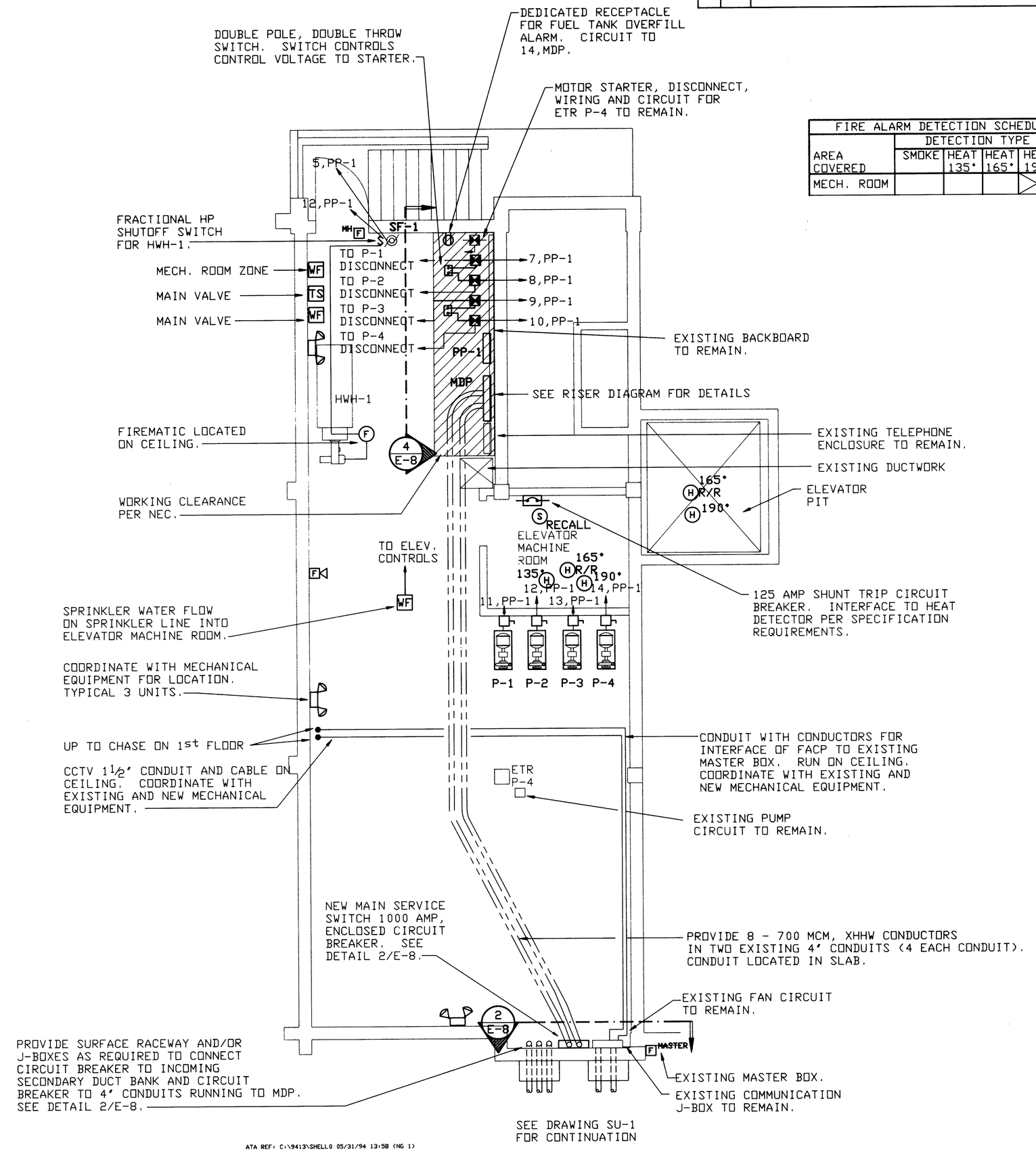

ATA REF: C:\9413\SHELL0 05/31/94 13:50 (NG 1)

FIRE ALARM DETECTION SCHEDULE					
AREA COVERED	DETECTION TYPE				
	SMOKE	HEAT 135°	HEAT 165°	HEAT 190°	HEAT 212°
MECH. ROOM				X	

NOTE:
1. CIRCUIT EMERGENCY LIGHTS TO HOT LEG OF LIGHTING CIRCUIT IN THIS ROOM.

MECHANICAL ROOM NEW WORK PLAN

SCALE: 1/4" = 1' -0"

SCALE IN FEET
4 0 4 8

NORTH

STATE OF CONNECTICUT J. MICHAEL GALLIMAN No. 14118 LICENSED PROFESSIONAL ENGINEER

APPLIED THERMODYNAMICS ASSOCIATES, INC.
CONSULTING ENGINEERS
203-456-4554
10 HIGGINS HIGHWAY - SUITE 10 MANSFIELD CENTER, CT 06250

NETC DWG.NO. 30779 - 304	DEPARTMENT OF THE NAVY — NAVAL FACILITIES ENGINEERING COMMAND
NETC SK.NO.	NAVAL EDUCATION AND TRAINING CENTER NEWPORT, RI.
DSGN. ALP	REPAIR AND MODIFICATIONS TO: BUILDING #678
DR. ALP	
BR. JMC	
DIR.	
APPROVED / DATE	DWG TITLE: MECHANICAL ROOM DEMOLITION AND NEW WORK
SATISFACTORY TO / DATE 11-22-94	SIZE F · CODE IDENT NO. 80091 · NAVFAC DRAWING NO. 2171464 · CONSTR CONTR. NO. N62472-93-C-1996
	SCALE: AS SHOWN · SPEC. · SHEET E-2½ OF 44

ATA REF: C:\9413\9413E2 10/07/94 09:10

REVISIONS				
SYM	ZONE	DESCRIPTION	DATE	APPR.

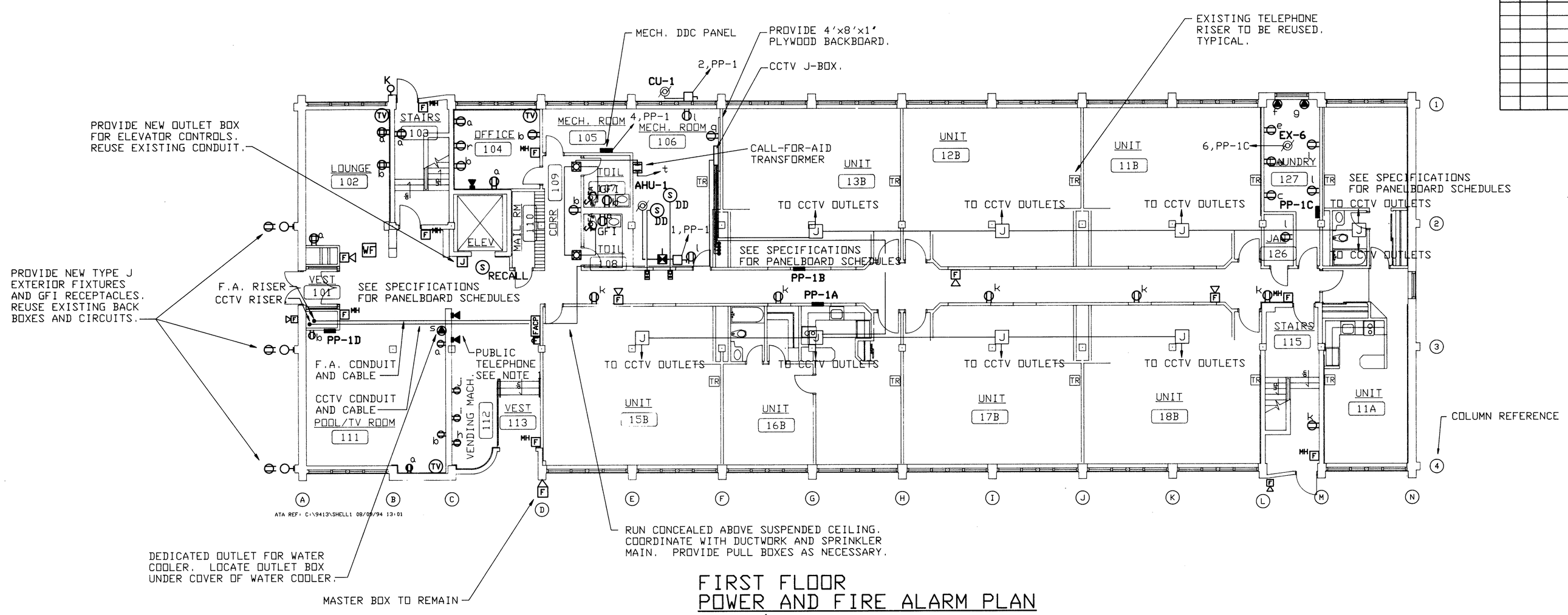

FIRST FLOOR POWER AND FIRE ALARM PLAN

SCALE: 1/8" = 1'-0"

GENERAL NOTES:
UNLESS OTHERWISE NOTED, BRANCH CIRCUIT WIRING SHALL BE EMT CONDUIT WITH COPPER CONDUCTORS.

NOTES:
1. BEFORE INSTALLATION OF PUBLIC TELEPHONES, CONTACT TELEPHONE COMPANY TO DETERMINE MOUNTING HEIGHT AND MOUNTING DETAILS.

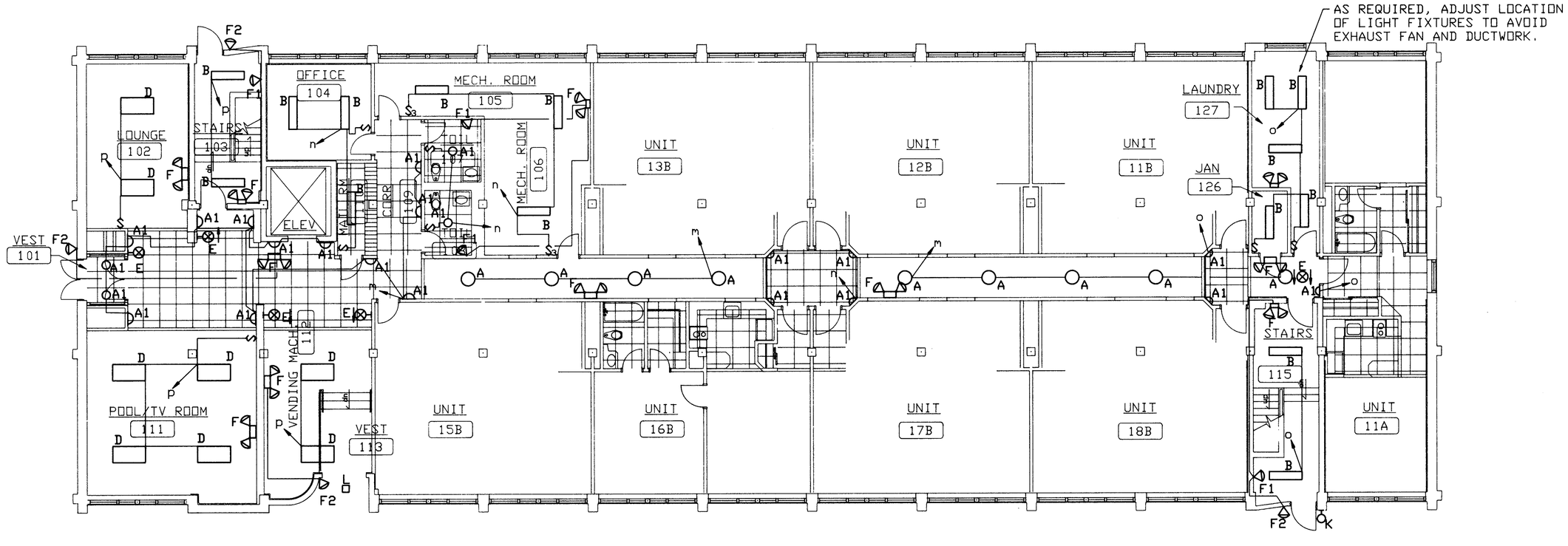

FIRE ALARM DETECTION SCHEDULE					
AREA COVERED	DETECTION TYPE				
	SMOKE	HEAT 135°	HEAT 165°	HEAT 190°	HEAT 212°
MECH. ROOM				X	

FIRST FLOOR LIGHTING PLAN

SCALE: 1/8" = 1'-0"

SCALE IN FEET 8 0 8 16

NORTH

APPLIED THERMODYNAMICS ASSOCIATES, INC.
CONSULTING ENGINEERS
203-456-4554
10 HIGGINS HIGHWAY - SUITE 10 MANSFIELD CENTER, CT 06250

NETC DWG.NO.: 30780 - 304
NETC SK.NO.
DSGN. ALP.
DR. ALP.
BR. JMC
DIR.
APPROVED R. Dilsen PE 12/12/94 DATE
SATISFACTORY TO Mark Shuster
DATE 11-22-94

DEPARTMENT OF THE NAVY — NAVAL FACILITIES ENGINEERING COMMAND
NAVAL EDUCATION AND TRAINING CENTER
NEWPORT, RI.

REPAIR AND MODIFICATIONS TO: BUILDING #678

DWG TITLE: FIRST FLOOR POWER, FIRE ALARM AND LIGHTING PLANS

SIZE: F | CODE IDENT NO.: 80091 | NAVFAC DRAWING NO.: 2171465
CONSTR CONTR. NO. N62472-93-C-1996
SCALE: AS SHOWN | SPEC. | SHEET E-3 31 OF 41

STATE OF CONNECTICUT — J. MICHAEL GALLUCCI — No. 18118 — LICENSED PROFESSIONAL ENGINEER

ATA REF: C:\9413\9413E3 10/10/94 15:58

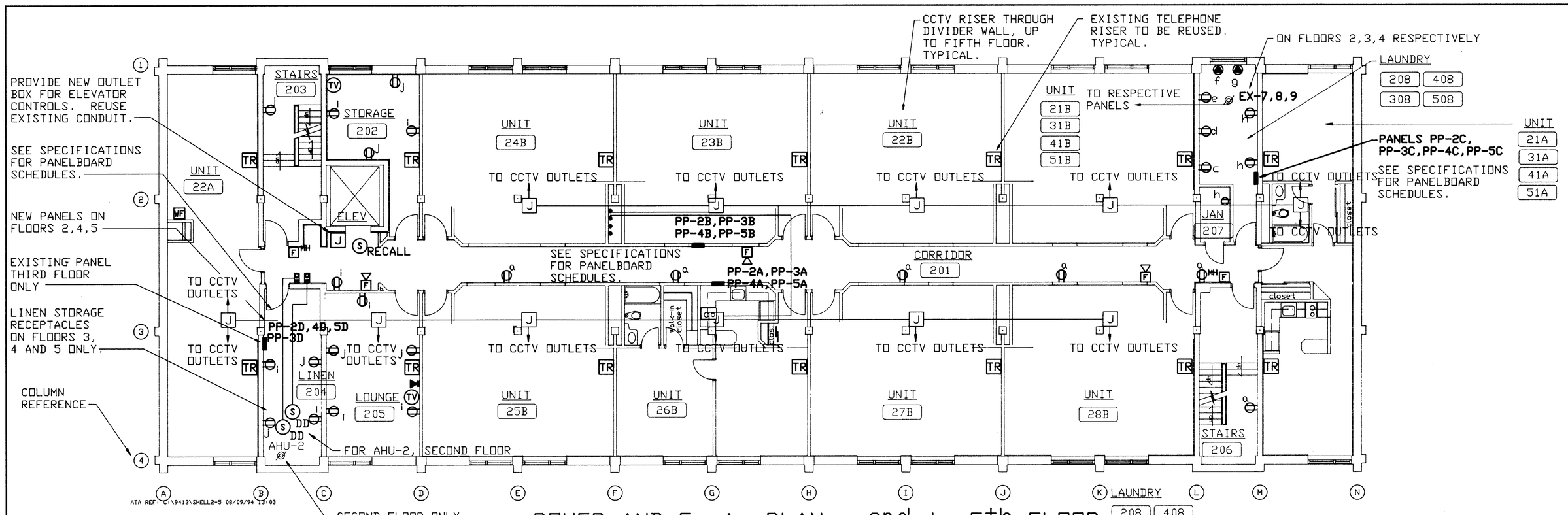

POWER AND F. A. PLAN - 2nd to 5th FLOOR

SCALE: 1/8" = 1'-0"

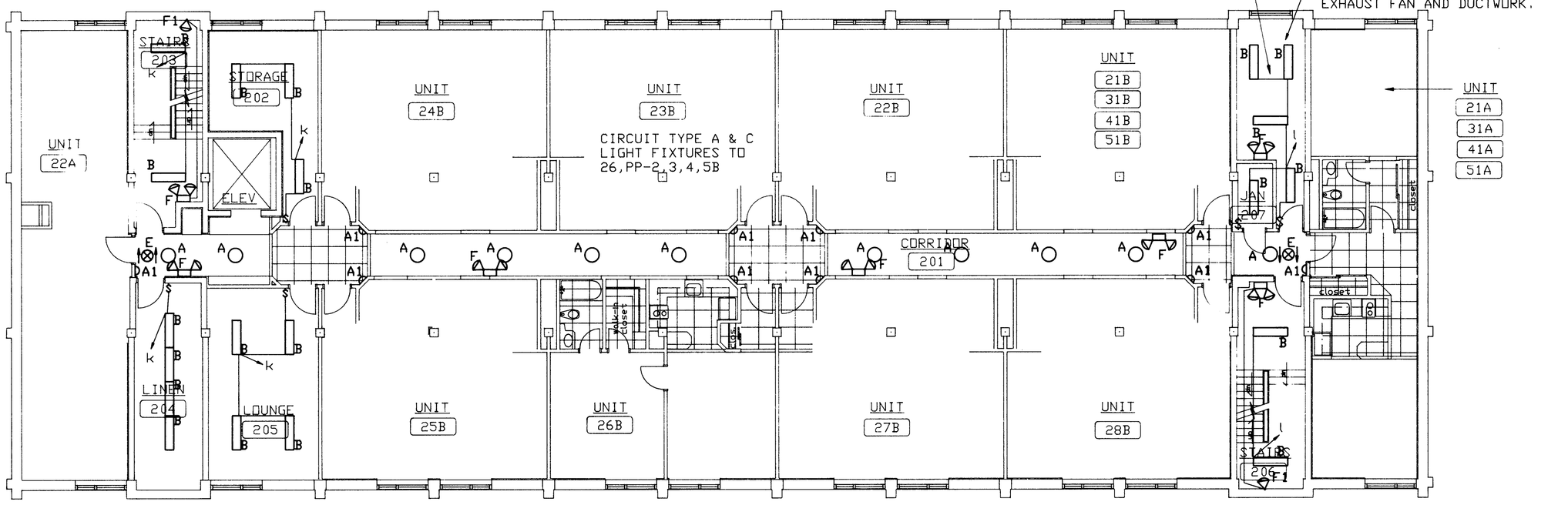

LIGHTING PLAN - 2nd to 5th FLOOR

SCALE: 1/8" = 1'-0"

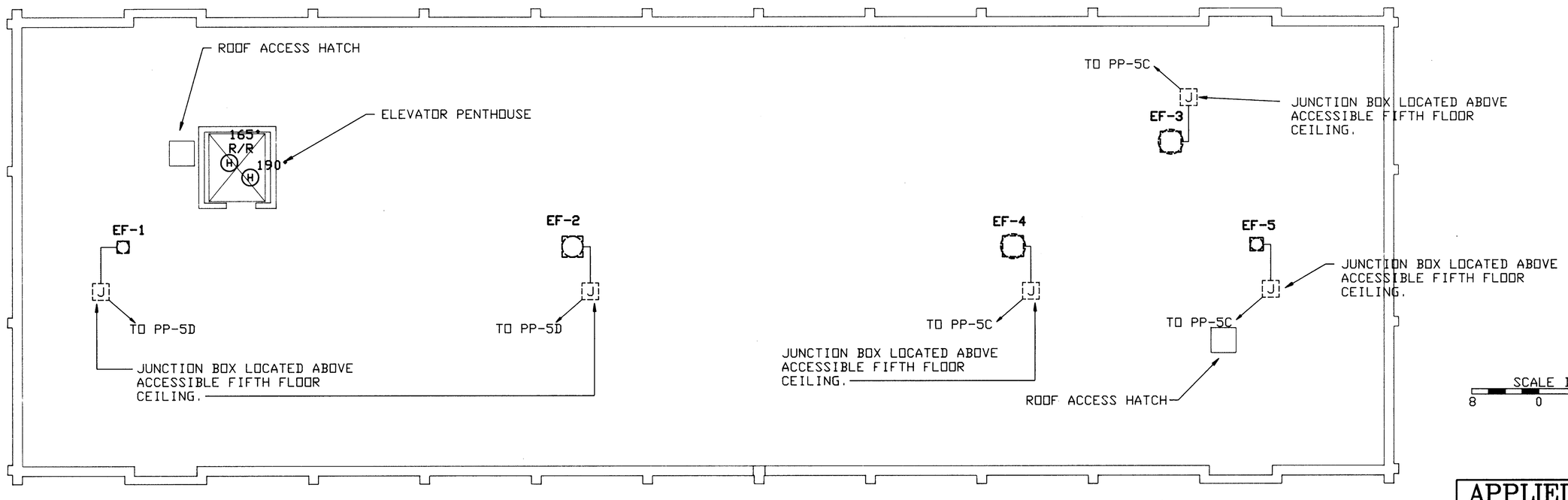

ROOF PLAN - POWER AND LIGHTING

SCALE: 1/8" = 1'-0"

SCALE IN FEET 8 0 8 16

NORTH

REVISIONS				
SYM	ZONE	DESCRIPTION	DATE	APPR.

~~NOTE: UNLESS OTHERWISE NOTED, BRANCH CIRCUIT WIRING SHALL BE MC CABLE WITH COPPER CONDUCTORS.~~

NOTE:
UNLESS OTHERWISE NOTED, BRANCH CIRCUIT WIRING SHALL BE EMT CONDUIT WITH COPPER CONDUCTORS.

STATE OF CONNECTICUT J. MICHAEL CALLAHAN No. 14118 LICENSED PROFESSIONAL ENGINEER

APPLIED THERMODYNAMICS ASSOCIATES, INC.
CONSULTING ENGINEERS
203-456-4554
10 HIGGINS HIGHWAY - SUITE 10 MANSFIELD CENTER, CT 06250

NETC DWG.NO. 30781 - 304
NETC SK.NO.
DSGN. ALP
DR. ALP
BR. JMC
DIR.
APPROVED DATE
SATISFACTORY TO
DATE 11-22-94

DEPARTMENT OF THE NAVY — NAVAL FACILITIES ENGINEERING COMMAND
NAVAL EDUCATION AND TRAINING CENTER
NEWPORT, RI.

REPAIR AND MODIFICATIONS TO: BUILDING #678

DWG TITLE: 2nd-5th FLOOR POWER, F.A. & LIGHTING PLANS ROOF POWER AND LIGHTING PLAN

SIZE F | CODE IDENT NO. 80091 | NAVFAC DRAWING NO. 2171466
CONSTR CONTR. NO. N62472-93-C-1996
SCALE: AS SHOWN | SPEC. | SHEET E-4 OF 44

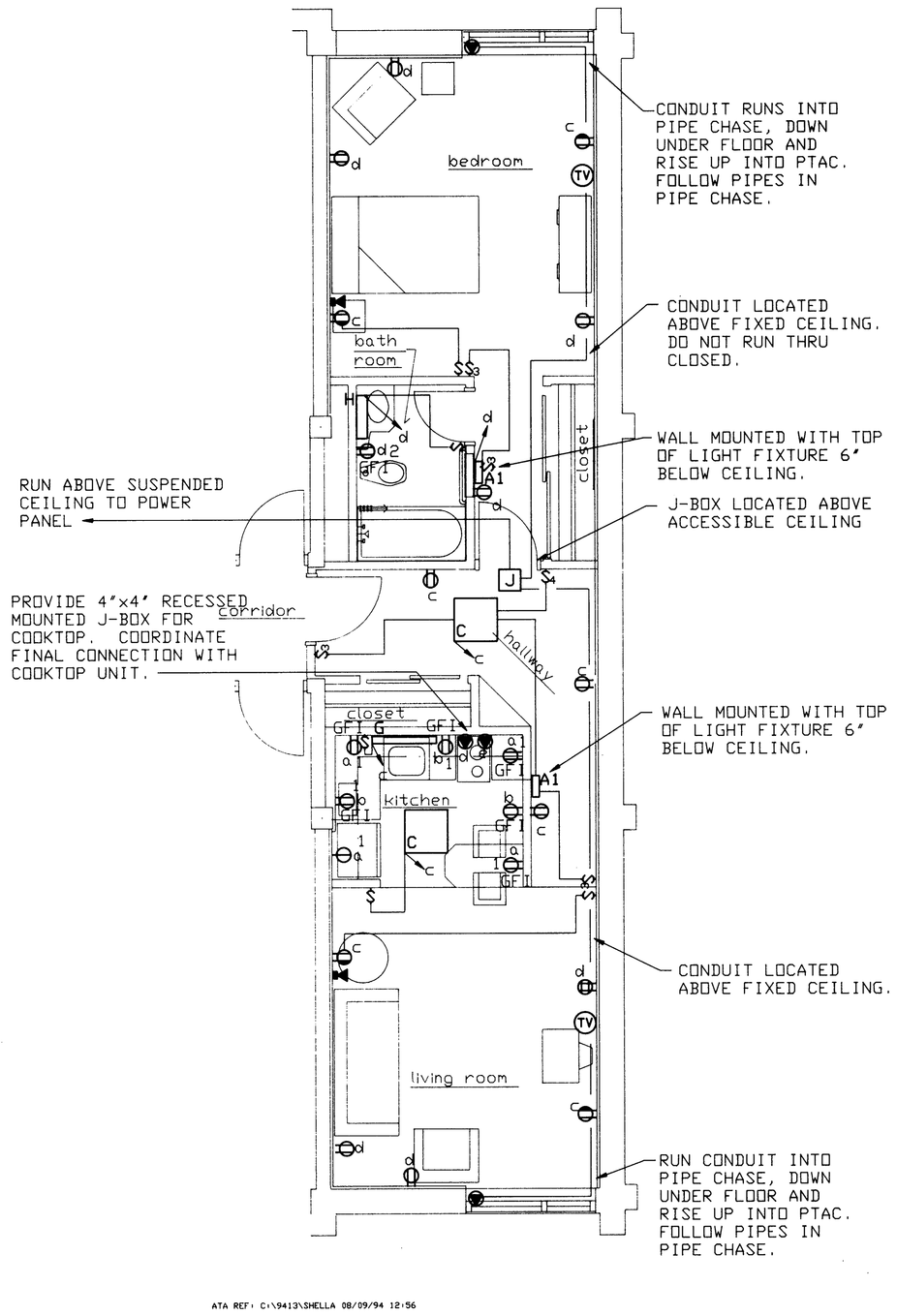

ATA REF: C:\9413\SHELLA 08/09/94 12:56

UNIT TYPE "A"

SCALE: 1/4" = 1'-0"

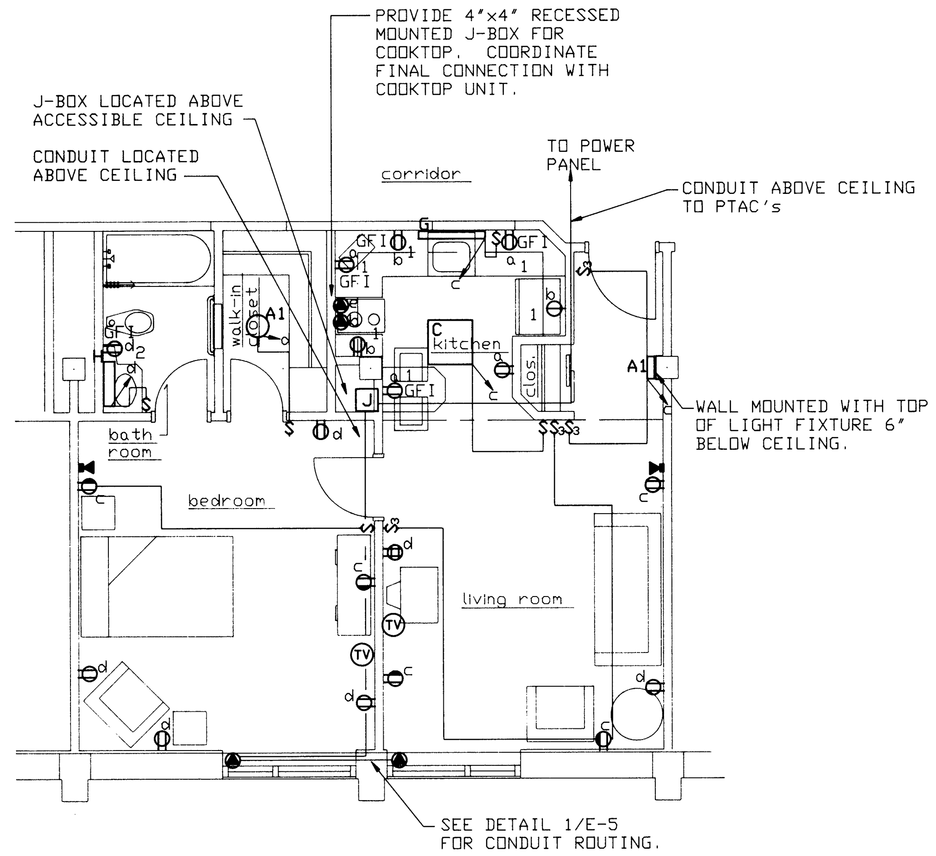

ATA REF: C:\9413\SHELLB 08/09/94 12:56

UNIT TYPE "B"

SCALE: 1/4" = 1'-0"

NOTE:
UNLESS OTHERWISE NOTED, BRANCH CIRCUIT WIRING SHALL BE EMT CONDUIT WITH COPPER CONDUCTORS.

NOTE:
BACK TO BACK OUTLETS IN UNIT PARTY WALLS SHALL NOT BE PERMITTED. SEPARATE BOXES BY ONE STUD SPACE MINIMUM.

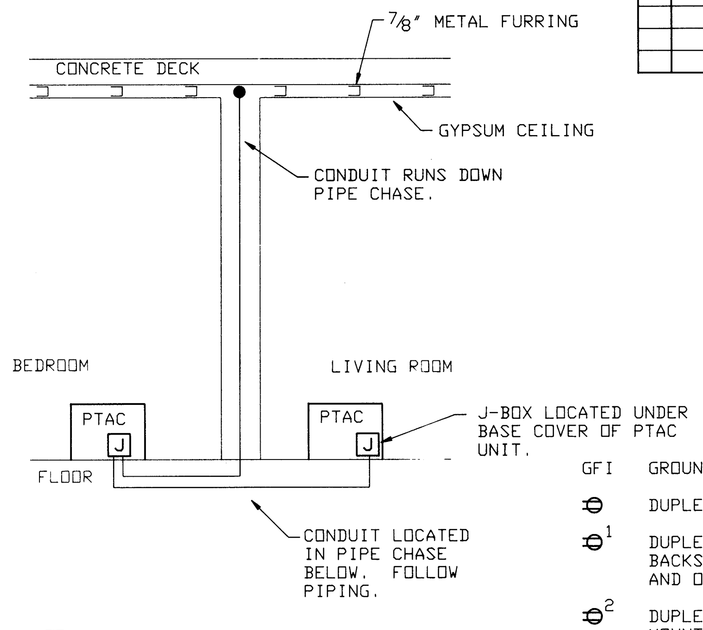

1 / E-5 PTAC FEEDER DETAIL

NOT TO SCALE

REVISIONS				
SYM	ZONE	DESCRIPTION	DATE	APPR.

FIRE ALARM DETECTION SCHEDULE					
AREA COVERED	DETECTION TYPE				
	SMOKE	HEAT 135°	HEAT 165°	HEAT 190°	HEAT 212°
UNIT A BEDROOM	X				
UNIT B L. ROOM	X				
UNIT B BEDROOM	X				
UNIT B L. ROOM	X				

LEGEND

GFI GROUND FAULT INTERRUPT PROTECTION

DUPLEX RECEPTACLE MOUNTED 16" AFF TO CENTER OF BOX.

1 DUPLEX RECEPTACLE MOUNTED 6" ABOVE SINK/COUNTERTOP BACKSPLASH. COORDINATE WITH SINK, MIRROR, DISPENSER AND OTHER ARCHITECTURAL ITEMS.

2 DUPLEX RECEPTACLE MOUNTED 2" ABOVE SINK. MOUNT TO SIDE OF SINK TO AVOID MIRROR LOCATION. SEE ARCHITECTURAL DRAWINGS.

QUAD RECEPTACLE MOUNTED 16" AFF TO CENTER OF BOX.

DUPLEX RECEPTACLE SPLIT WIRED MOUNTED 16" AFF TO CENTER OF BOX.

SINGLE RECEPTACLE MOUNTED 60" AFF TO CENTER OF BOX.

TELEPHONE OUTLET MOUNTED 16" AFF TO CENTER OF BOX.

TV CABLE TV OUTLET MOUNTED 16" AFF TO CENTER OF BOX.

RECEPTACLE COMPATIBLE WITH EQUIPMENT INSTALLED. COORDINATE LOCATION WITH OTHER TRADES.

PANELBOARD MOUNTED AT 54" TO CENTER OF BOX.

MANUAL DISCONNECT

J JUNCTION BOX

MAGNETIC MOTOR STARTER

NOTES:
1) THE FINAL COLOR AND/OR FINISH OF ALL ELECTRICAL DEVICE COVER PLATES AND LIGHTING FIXTURES SHALL BE AS SELECTED BY ARCHITECT AT THE TIME OF SHOP DRAWING SUBMISSIONS.
2) NUMBER OR LOWER CASE LETTER ADJACENT TO ELECTRICAL DEVICES INDICATES CIRCUIT NUMBER.

FACP FIRE ALARM CONTROL PANEL FLUSH MOUNTED AT 60" AFF TO CENTER OF BOX.

H HEAT DETECTOR SURFACE MOUNTED ON CEILING.

S DD DUCT TYPE SMOKE DETECTOR. PROVIDED BY ELECTRICAL CONTRACTOR, MOUNTED BY MECHANICAL CONTRACTOR, WIRED BY ELECTRICAL CONTRACTOR. SEE MECHANICAL DRAWINGS FOR LOCATION.

MH F FIRE ALARM MANUAL PULL STATION MOUNTED 48" AFF TO CENTER OF BOX.

F FIRE ALARM AUDIBLE/VISUAL SIGNAL MOUNTED 84" AFF TO CENTER OF BOX.

WF SPRINKLER SYSTEM FLOW SWITCH (SWITCH BY OTHERS) CONNECTION AND WIRING BY ELECTRICAL CONTRACTOR.

S RECALL ELEVATOR RECALL SMOKE DETECTOR

DUCT TYPE SMOKE DETECTOR REMOTE INDICATOR AND TEST STATION MOUNTED 6" BELOW CEILING.

F FIRE ALARM BELL MOUNTED 6" BELOW CEILING.

$CFA CALL FOR AID EMERGENCY STATION WITH PULL CORD MOUNTED 36" AFF TO CENTER. BOTTOM OF PULL CORD 12" AFF.

CALL FOR AID AUDIO/VISUAL ALARM MOUNTED 4" ABOVE DOOR TO CENTER OF BOX.

-LIGHTING SWITCHING:
$ --SWITCH TO EQUIPMENT SERVED MOUNTED 48" AFF TO CENTER OF BOX UNLESS OTHERWISE SHOWN ON DRAWING.
PROVIDE WHERE SHOWN:
$3 --(3) THREE WAY SWITCH
$4 --(4) THREE WAY SWITCH

CIRCUITING FOR TYPICAL UNIT A

CKT No.	DESCRIPTION		LOAD VA	LOAD VOLTS	PH	CURRENT BRANCH CIRCUIT A	B	C	REMARKS	C/B A	C/B P
1	TYP. UNIT A	circuit a	1,500	120	1					20	1
2		circuit b	1,500	120	1					20	1
3		circuit c	990	120	1					20	1
4		circuit d	990	120	1					20	1
5		circuit e	5,000	208	1				10 AWG, 3/4" C	30	2
6		PTAC's	2,579	208	1					20	2

CIRCUITING FOR TYPICAL UNIT B

CKT No.	DESCRIPTION		LOAD VA	LOAD VOLTS	PH	CURRENT BRANCH CIRCUIT A	B	C	REMARKS	C/B A	C/B P
1	TYP. UNIT B	circuit a	1,500	120	1					20	1
2		circuit b	1,500	120	1					20	1
3		circuit c	990	120	1					20	1
4		circuit d	990	120	1					20	1
5		circuit e	5,000	208	1				10 AWG, 3/4" C	30	2
6		PTAC's	2,579	208	1					20	2

SCALE IN FEET
4 0 4 8

APPLIED THERMODYNAMICS ASSOCIATES, INC.
CONSULTING ENGINEERS
203-456-4554
10 HIGGINS HIGHWAY - SUITE 10 MANSFIELD CENTER, CT 06250

NETC DWG.NO. 30782 - 304
NETC SK.NO.
DSGN. ALP
DR. ALP
BR. JMC
DIR.
APPROVED DATE
SATISFACTORY TO
DATE 11-22-94

DEPARTMENT OF THE NAVY — NAVAL FACILITIES ENGINEERING COMMAND
NAVAL EDUCATION AND TRAINING CENTER
NEWPORT, RI.

REPAIR AND MODIFICATIONS TO: BUILDING #678

DWG TITLE: UNIT A AND B NEW WORK PLANS

SIZE F | CODE IDENT NO. 80091 | NAVFAC DRAWING NO. 2171467
CONSTR CONTR. NO. N62472-93-C-1996
SCALE: AS SHOWN | SPEC. | SHEET E-5 OF 44

ATA REF: C:\9413\9413ES 10/07/94 08:57

ELECTRICAL DESIGN SUMMARY

DESCRIPTION		NOTES
BUILDING USE GROUP	I-2	
BUILDING AREA		
BASEMENT MECH. ROOM	1,100 SQ.FT.(NOMINAL)	
1st FLOOR	9,700 SQ.FT.(NOMINAL)	
2nd FLOOR	9,700 SQ.FT.(NOMINAL)	
3rd FLOOR	9,700 SQ.FT.(NOMINAL)	
4th FLOOR	9,700 SQ.FT.(NOMINAL)	
5th FLOOR	9,700 SQ.FT.(NOMINAL)	
TOTAL	49,600 SQ.FT.(NOMINAL)	
PRIMARY DISTRIBUTION		
SYSTEM VOLTAGE	2,400 VOLTS, 3ø, DELTA CONFIGURATION	
NOMINAL AMPACITY AT FULL LOAD (500 KVA)	120 AMPS	
O.C. PROTECTION	110 AMPS	
CONDUCTOR TYPE	3 - #4, 15 KV CONDUCTORS	NOMINAL RATING FOR 1 - #4 15KV CONDUCTOR IS 110 AMPS.
DUCT BANK	ONE SPARE 4" RIGID ONE 4" RIGID	
TRANSFORMER	500 KVA, 3ø, 2,400/13,800 PRIMARY (Δ) 120/208 SECONDARY (Y)	RADIAL CONFIGURATION. SURGE PROTECTION IN PRIMARY ENCLOSURE.
SECONDARY DISTRIBUTION		
VOLTAGE	120/208 V, 3ø, 4W	
AMPACITY	1000 AMPS	
FEEDER	~~2 - 4" RIGID~~ SEE SU-1 & ELEC. RISER THIS DWG. ~~WITH 6 - 700 MCM,CU,THWN (3 PER CONDUIT)~~ ~~AND 2 - 700 MCM,CU,THWN (FOR NEUTRAL).~~	~~NOMINAL RATING FOR 2 - 700 MCM CONDUCTOR IS 1040 AMPS.~~
COMPUTED LOAD REQUIRED BY NEC ART. 220	430,000	
SYSTEM DESIGN	500,000 VA	

ATA REF: C:\9413\DETIE6 06/02/94 16:13 (NG 1)

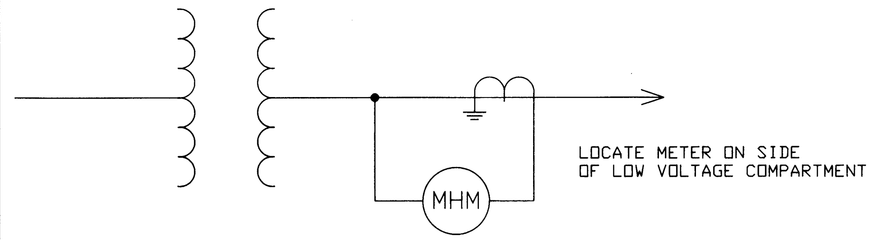

2 / E-6 METERING ARRANGEMENT
NOT TO SCALE

REVISIONS				
SYM	ZONE	DESCRIPTION	DATE	APPR.

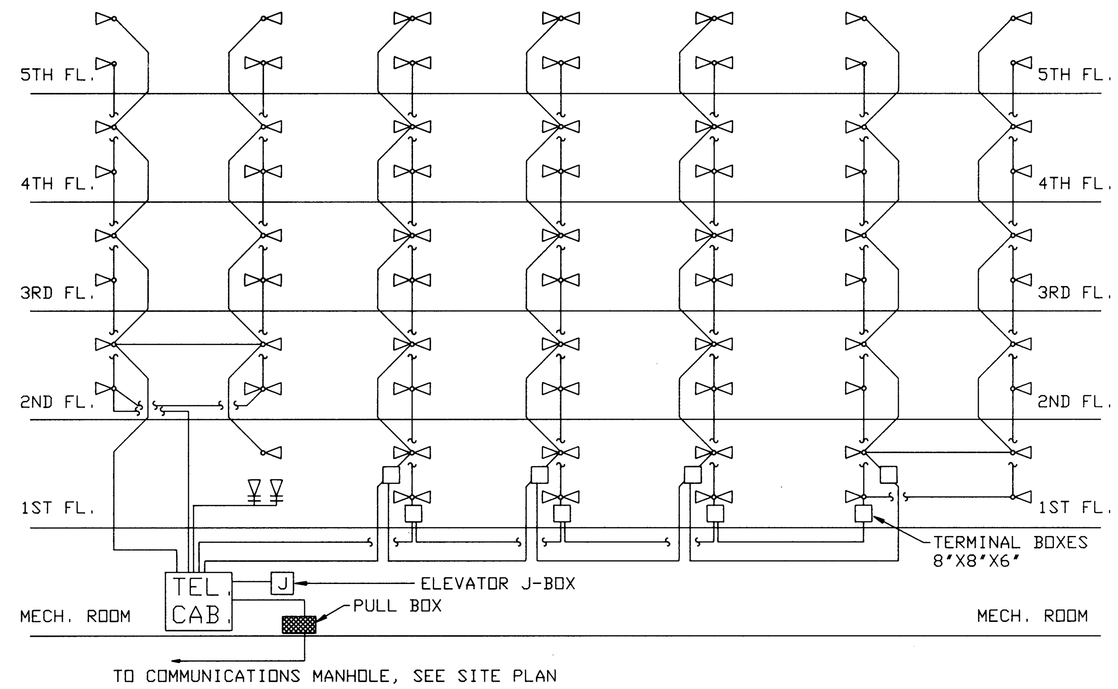

TELEPHONE RISER DIAGRAM
NOT TO SCALE

NOTE:
ALL TELEPHONE CONDUITS ARE EXISTING TO REMAIN. REMOVE ALL EXISTING STATION WIRING. PROVIDE NEW 6 CONDUCTOR CABLE BETWEEN EACH UNIT AND TELEPHONE CABINET. PROVIDE NEW JACKS IN EACH UNIT.

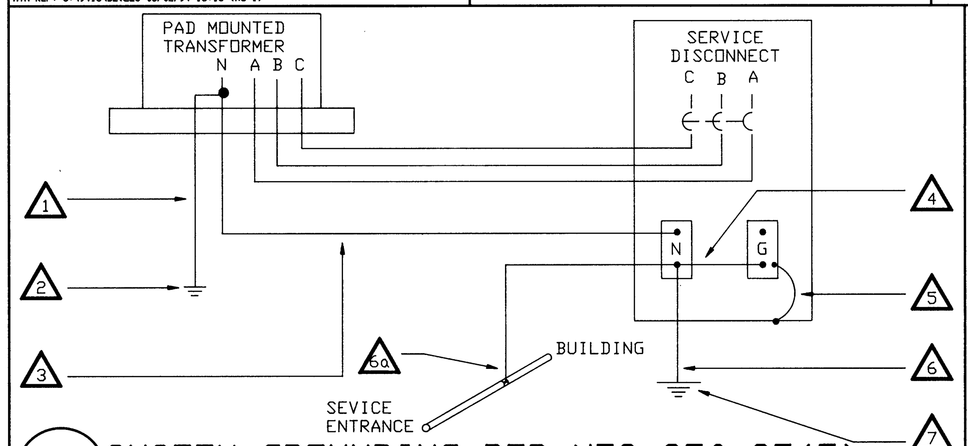

1 / E-6 SYSTEM GROUNDING PER NEC 250-25(5)
NOT TO SCALE

NOTES:
1) NO GROUNDING CONNECTIONS ALLOWED TO GROUNDED SERVICE CONDUCTORS (ie NEUTRAL) ON LOAD SIDE OF THE SERVICE DISCONNECT.
2) SIZE OF GROUNDING CONDUCTORS SHALL BE PER NEC 250 , PART J.

1. GROUNDING CONNECTION PER NEC 250-23a AND UTILITY COMPANY REQUIREMENTS.
2. GROUNDING ELECTRODE PER NEC 250 PART H.
3. GROUNDED SERVICE CONDUCTOR (ie NEUTRAL) PER NEC 250-23b AND 250-25(5).
4. MAIN BONDING JUMPER PER NEC 250-53.
5. EQUIPMENT GROUNDING CONDUCTOR PER NEC 250 PART F.
6. GROUNDING CONNECTION PER NEC 250-23a AND UTILITY COMPANY REQUIREMENTS.
6a. GROUNDING CONNECTION PER NEC 250-23a.
7. GROUNDING ELECTRODE PER NEC 250 PART H.

ATA REF: C:\9413\DETIE6 06/02/94 15:10 (NG 1)

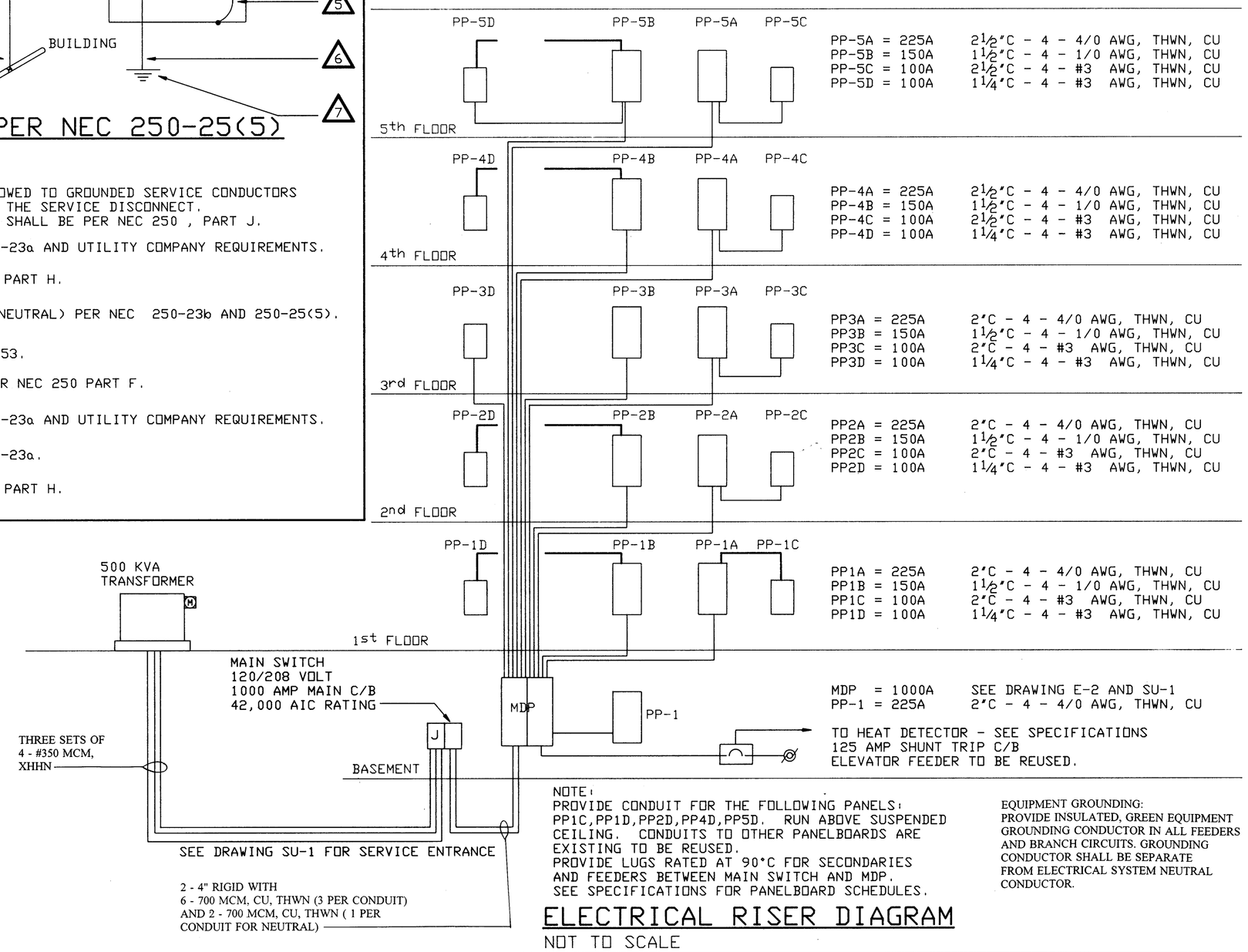

NOTE:
PROVIDE CONDUIT FOR THE FOLLOWING PANELS: PP1C,PP1D,PP2D,PP4D,PP5D. RUN ABOVE SUSPENDED CEILING. CONDUITS TO OTHER PANELBOARDS ARE EXISTING TO BE REUSED.
PROVIDE LUGS RATED AT 90°C FOR SECONDARIES AND FEEDERS BETWEEN MAIN SWITCH AND MDP.
SEE SPECIFICATIONS FOR PANELBOARD SCHEDULES.

EQUIPMENT GROUNDING:
PROVIDE INSULATED, GREEN EQUIPMENT GROUNDING CONDUCTOR IN ALL FEEDERS AND BRANCH CIRCUITS. GROUNDING CONDUCTOR SHALL BE SEPARATE FROM ELECTRICAL SYSTEM NEUTRAL CONDUCTOR.

ELECTRICAL RISER DIAGRAM
NOT TO SCALE

ATA REF: C:\9413\9413E6 08/11/94 10:15

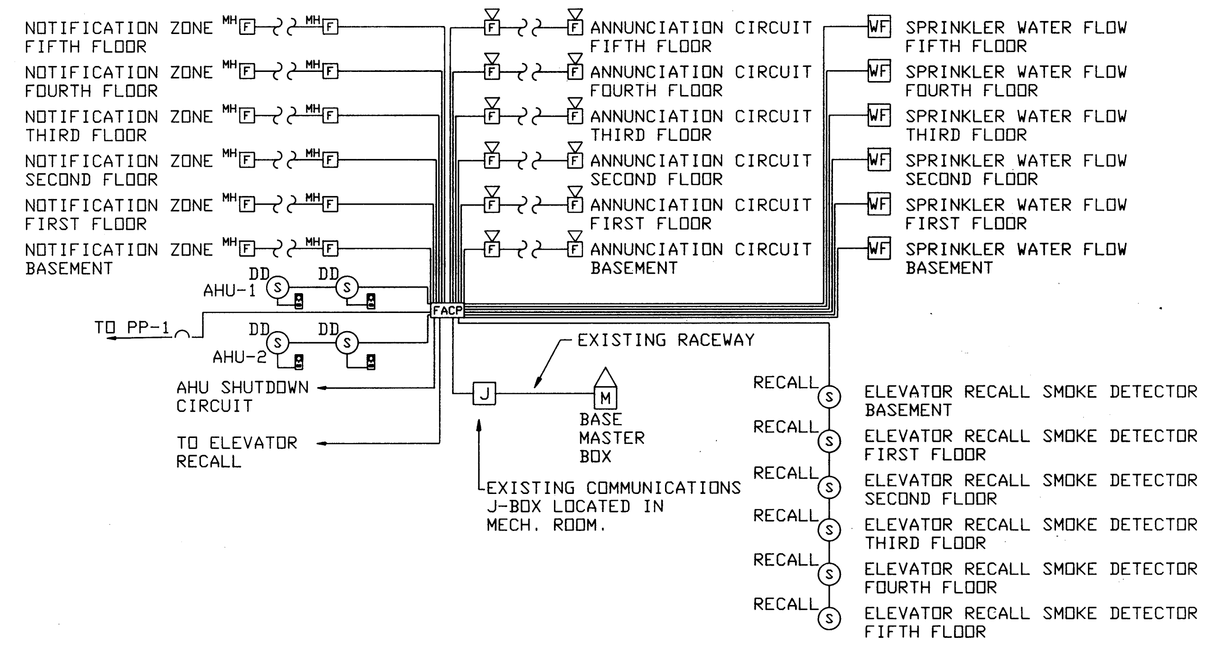

FIRE ALARM RISER DIAGRAM
NOT TO SCALE

STATE OF CONNECTICUT · J. MICHAEL CALLAHAN · No. 14118 · LICENSED PROFESSIONAL ENGINEER

7-29-94

APPLIED THERMODYNAMICS ASSOCIATES, INC.
CONSULTING ENGINEERS
203-456-4554
10 HIGGINS HIGHWAY - SUITE 10 MANSFIELD CENTER, CT 06250

NETC DWG.NO. 30783 - 304	DEPARTMENT OF THE NAVY — NAVAL FACILITIES ENGINEERING COMMAND	
NETC SK.NO.	NAVAL EDUCATION AND TRAINING CENTER, NEWPORT, RI.	
DSGN. ALP		
DR. ALP	REPAIR AND MODIFICATIONS TO: BUILDING #678	
BR. JMC		
DIR.		
APPROVED / DATE	DWG TITLE: SCHEDULES AND RISER DIAGRAMS	
SATISFACTORY TO / DATE 11-22-94	SIZE F · CODE IDENT NO. 80091 · NAVFAC DRAWING NO. 2171468	
	CONSTR CONTR. NO. N62472-93-C-1996	
	SCALE: AS SHOWN · SPEC. · SHEET E-6 OF 44	

REVISIONS				
SYM	ZONE	DESCRIPTION	DATE	APPR.

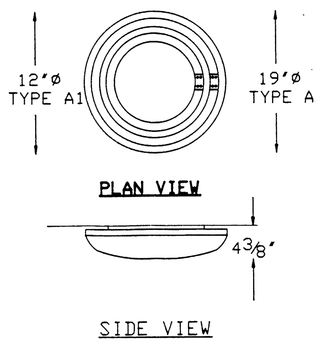

LIGHTING FIXTURE TYPE A & A1

SCALE: 1' = 1'-0'

MOUNTING: CEILING/WALL, SURFACE
LENS: OPAL ACRYLIC
LAMP: 32 WATT & 40 WATT CIRCULINE
BALLAST: INTEGRAL

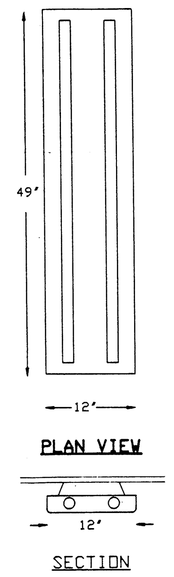

LIGHTING FIXTURE TYPE B

SCALE: 1' = 1'- 0'

MOUNTING: CEILING, SURFACE
LENS: ACRYLIC PRISMATIC
LAMP: 2 - 32 WATT FLUORESCENT
BALLAST: 1 - ELECTRONIC

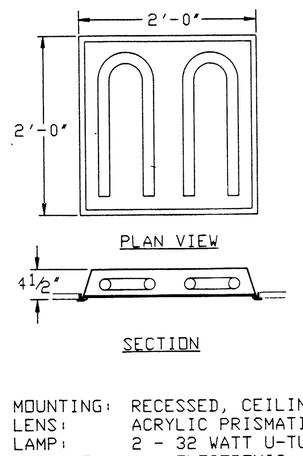

MOUNTING: RECESSED, CEILING
LENS: ACRYLIC PRISMATIC
LAMP: 2 - 32 WATT U-TUBE
BALLAST: 1 - ELECTRONIC

LIGHTING FIXTURE TYPE C

SCALE: 1' = 1'-0'

ATA REF: L:\NAVY3 07/01/94 07:50

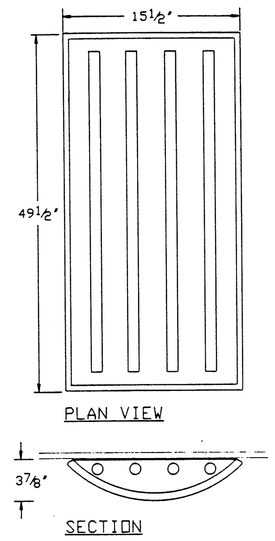

LIGHTING FIXTURE TYPE D

SCALE: 1' = 1'- 0'

MOUNTING: CEILING, SURFACE
LENS: OPAL ACRYLIC
LAMP: 4 - 32 WATT FLUORESCENT
BALLAST: 2 - ELECTRONIC

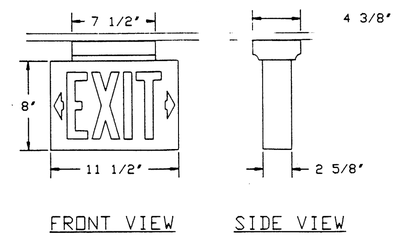

LIGHTING FIXTURE TYPE E

SCALE: 1' = 1'- 0'

MOUNTING: WALL OR CEILING, SURFACE
90 MINUTE BATTERY BACKUP
LAMP: 2 - 13 WATT COMPACT FLUORESCENT
BALLAST: ENERGY EFFICIENT HIGH POWER FACTOR

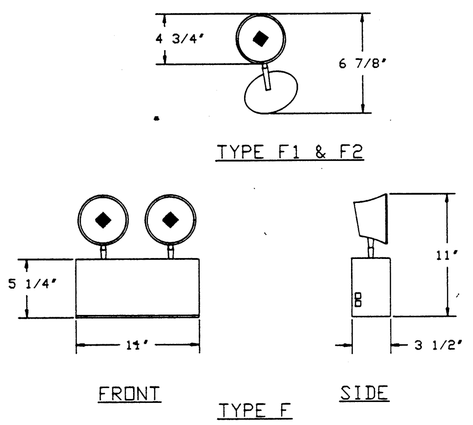

LIGHTING FIXTURE TYPE F & F1 & F2

SCALE: 1' = 1'- 0'

MOUNTING: WALL, SURFACE
90 MINUTE BATTERY BACKUP
LAMP: 9 WATT PER HEAD, INCANDESCENT
F2 FIXTURE SHALL BE RATED FOR WET LOCATION

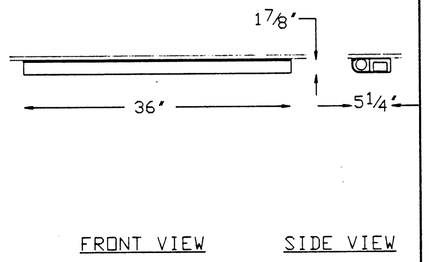

LIGHTING FIXTURE TYPE G

SCALE: 1' = 1'- 0'

MOUNTING: UNDER CABINET, SURFACE
LENS: ACRYLIC PRISMATIC
LAMP: 1 - 32 WATT FLUORESCENT
BALLAST: 1 - ELECTRONIC

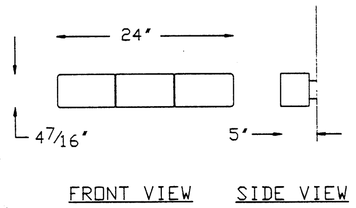

LIGHTING FIXTURE TYPE H

SCALE: 1' = 1'- 0'

MOUNTING: WALL, SURFACE
LENS: OPAL ACRYLIC
LAMP: 3 - 13 WATT COMPACT FLUORESCENT
BALLAST: ENERGY EFFICIENT HIGH POWER FACTOR

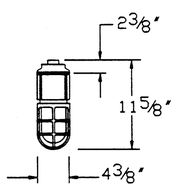

LIGHTING FIXTURE TYPE I

SCALE: 1' = 1'- 0'

MOUNTING: EXTERIOR WET LOCATION, PENDENT
LENS: POLYCARBONATE GLOBE WITH GUARD
LAMP: 18 WATT COMPACT FLUORESCENT
BALLAST: INTEGRAL, 0° COLD TEMP.

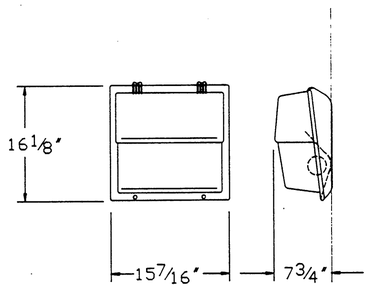

LIGHTING FIXTURE TYPE J

SCALE: 1' = 1'- 0'

MOUNTING: EXTERIOR WALL WET LOCATION, SURFACE
LENS: POLYCARBONATE
LAMP: 100 WATT HPS
BALLAST: INTEGRAL
PROVIDE PHOTOCELL

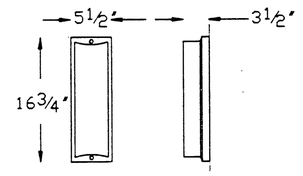

LIGHTING FIXTURE TYPE K

SCALE: 1' = 1'- 0'

MOUNTING: EXTERIOR WET LOCATION, WALL, SURFACE
LENS: CLEAR PRISMATIC POLYCARBONATE
LAMP: 2 - 13 WATT COMPACT FLUORESCENT
BALLAST: ENERGY EFFICIENT HIGH POWER FACTOR

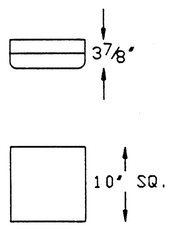

LIGHTING FIXTURE TYPE L

SCALE: 1' = 1'- 0'

MOUNTING: EXTERIOR WET LOCATION, CEILING, SURFACE
LENS: POLYCARBONATE TRANSLUCENT
LAMP: 2 - 26 WATT COMPACT FLUORESCENT
BALLAST: INTEGRAL, 0° COLD TEMP.

ATA REF: C:\9412\9412C7 08/11/94 10:18

SCALE IN FEET
1 0 1 2

APPLIED THERMODYNAMICS ASSOCIATES, INC.
CONSULTING ENGINEERS
203-456-4554
10 HIGGINS HIGHWAY - SUITE 10 MANSFIELD CENTER, CT 06250

7-29-94

NETC DWG.NO. 30784 - 304	DEPARTMENT OF THE NAVY — NAVAL FACILITIES ENGINEERING COMMAND
NETC SK.NO.	NAVAL EDUCATION AND TRAINING CENTER, NEWPORT, RI.
DSGN. ALP	
DR. ALP	REPAIR AND MODIFICATIONS TO: BUILDING #678
BR. JMC	
DIR.	
APPROVED / DATE	DWG TITLE: LIGHTING FIXTURE DETAILS
SATISFACTORY TO / DATE 11-22-94	SIZE F · CODE IDENT NO. 80091 · NAVFAC DRAWING NO. 2171469
	CONSTR CONTR. NO. N62472-93-C-1996
SCALE: AS SHOWN	SPEC. · SHEET E-7 OF

REVISIONS				
SYM	ZONE	DESCRIPTION	DATE	APPR.

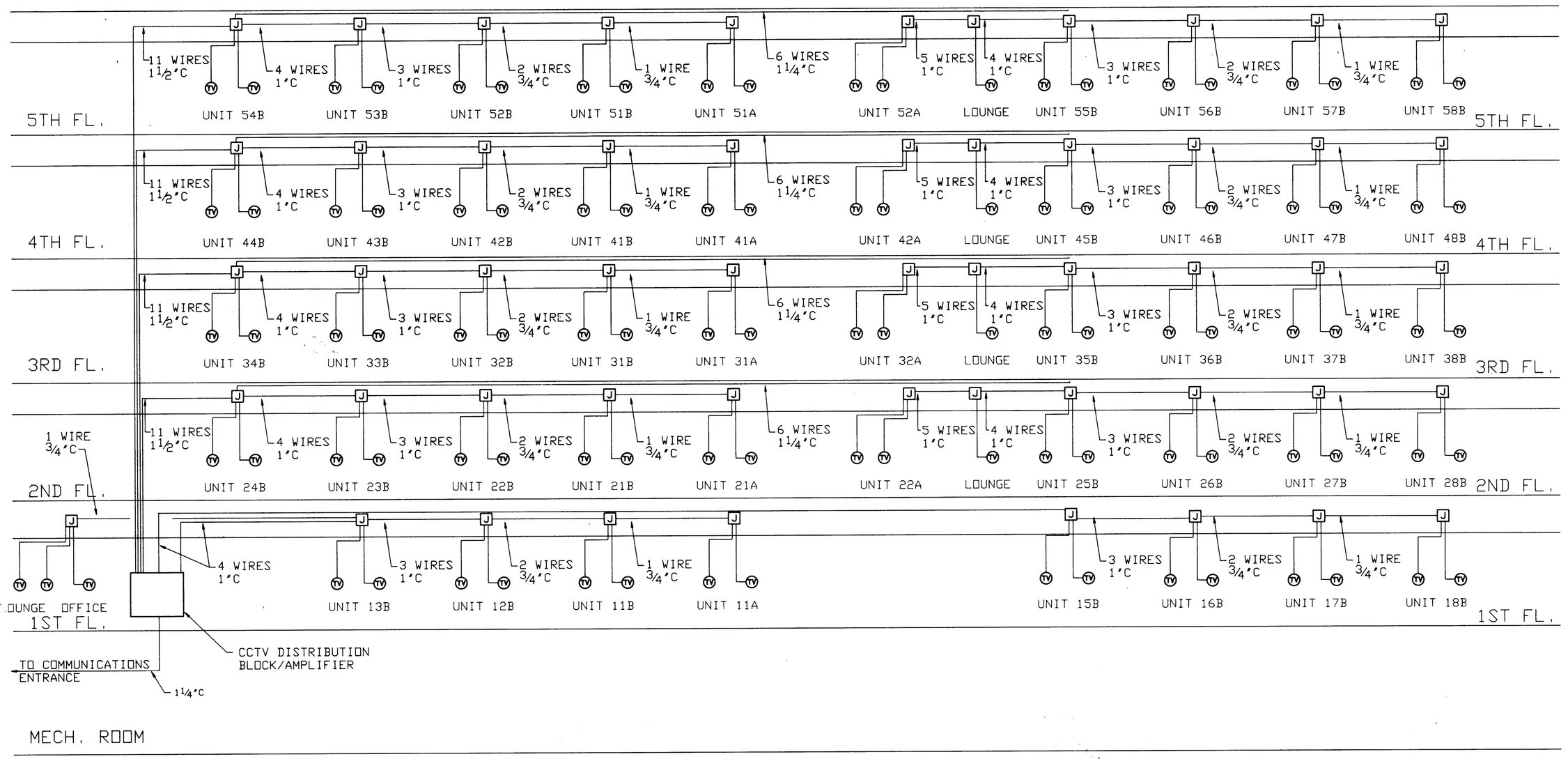

CCTV EAST RISER DIAGRAM

NOT TO SCALE

NOTE:
J-BOXES SHALL BE LOCATED IN ACCESSIBLE CEILING.

CCTV WEST RISER DIAGRAM

NOT TO SCALE

ATA REF: C:\9413\TVRISER 06/02/94 10:11 CNG 1)

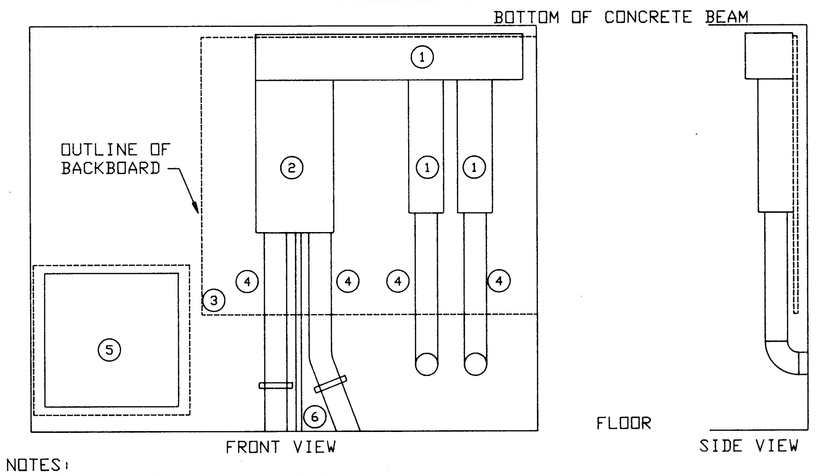

NOTES:
1. REMOVE EXISTING WIRE TROUGH.
2. REMOVE EXISTING ENCLOSED CIRCUIT BREAKER.
3. EXISTING BACKBOARD TO REMAIN.
4. EXISTING CONDUIT TO REMAIN. CUT BACK AS NECESSARY TO ACCOMMODATE INSTALLATION OF NEW EQUIPMENT.
5. EXISTING LOCATION OF TELEPHONE PULL BOX TO REMAIN.
6. EXISTING GROUNDING CONDUIT TO BE REUSED.

1 / E-8 ENCLOSED CIRCUIT BREAKER DEMOLITION DETAILS

SCALE: ¾" = 1'-0"

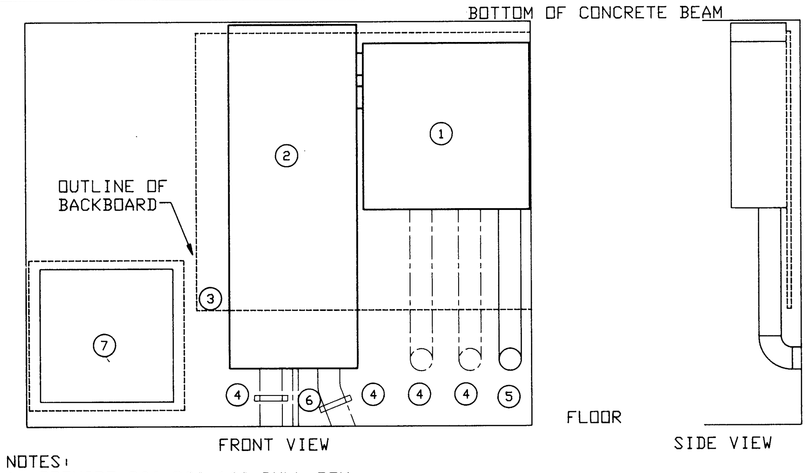

NOTES:
1. PROVIDE 30"x30"x10" PULL BOX.
2. PROVIDE 1000 AMP ENCLOSED CIRCUIT BREAKER. MAXIMUM DIMENSIONS - 62"x30"x10".
3. EXISTING BACKBOARD TO REMAIN.
4. EXISTING CONDUIT TO BE REUSED. CUT BACK AS NECESSARY.
5. PROVIDE CONDUIT.
6. GROUND CONDUIT. PROVIDE GROUNDING CONDUCTOR.
7. LOCATION OF EXISTING TELEPHONE PULL BOX TO REMAIN.

2 / E-8 ENCLOSED CIRCUIT BREAKER NEW WORK DETAILS

SCALE: ¾" = 1'-0"

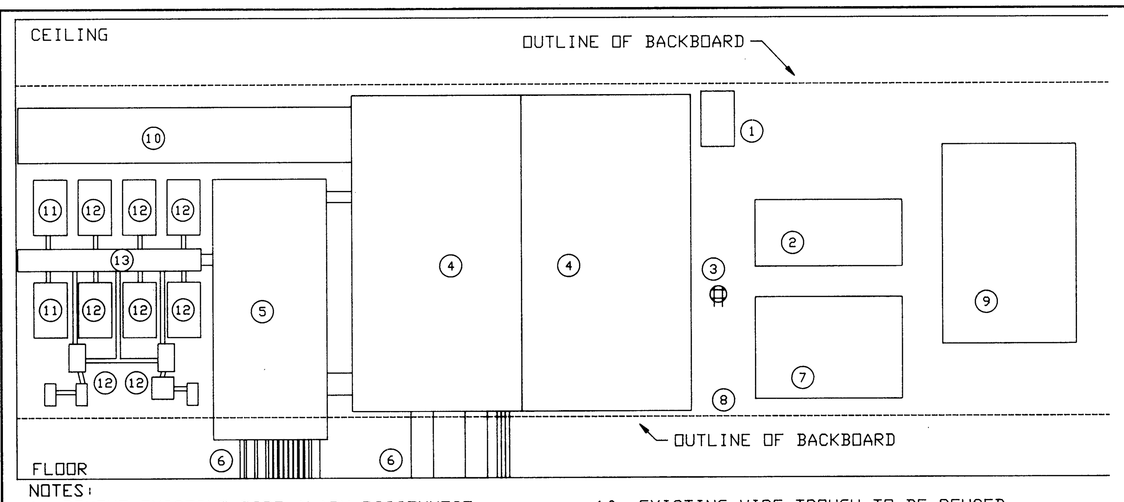

NOTES:
1. REMOVE EXISTING FIRE ALARM DISCONNECT.
2. REMOVE EXISTING FIRE ALARM POWER SUPPLY.
3. REMOVE EXISTING QUAD RECEPTACLE.
4. REMOVE EXISTING MDP. SEE SPECIFICATIONS FOR PANELBOARD SCHEDULE AND CIRCUITS TO REMAIN.
5. REMOVE EXISTING PP-1. SEE SPECIFICATIONS FOR PANELBOARD SCHEDULE AND CIRCUITS TO REMAIN.
6. EXISTING CONDUITS TO BE REUSED. CUT BACK AS NECESSARY FOR NEW EQUIPMENT INSTALLATION.
7. RELOCATE EXISTING TELEPHONE PUNCHDOWN BLOCKS.
8. EXISTING BACKBOARD TO REMAIN.
9. EXISTING TELEPHONE J-BOX TO REMAIN.
10. EXISTING WIRE TROUGH TO BE REUSED.
11. ETR-P4 MOTOR STARTER & DISCONNECT TO REMAIN.
12. P1,P2 & P3 MOTOR STARTERS, DISCONNECTS AND CONTROLS TO BE REMOVE.
13. WIRE TROUGH TO BE REUSED.

3 / E-8 PANELBOARD DISTRIBUTION DEMOLITION DETAILS

SCALE: ¾" = 1'-0"

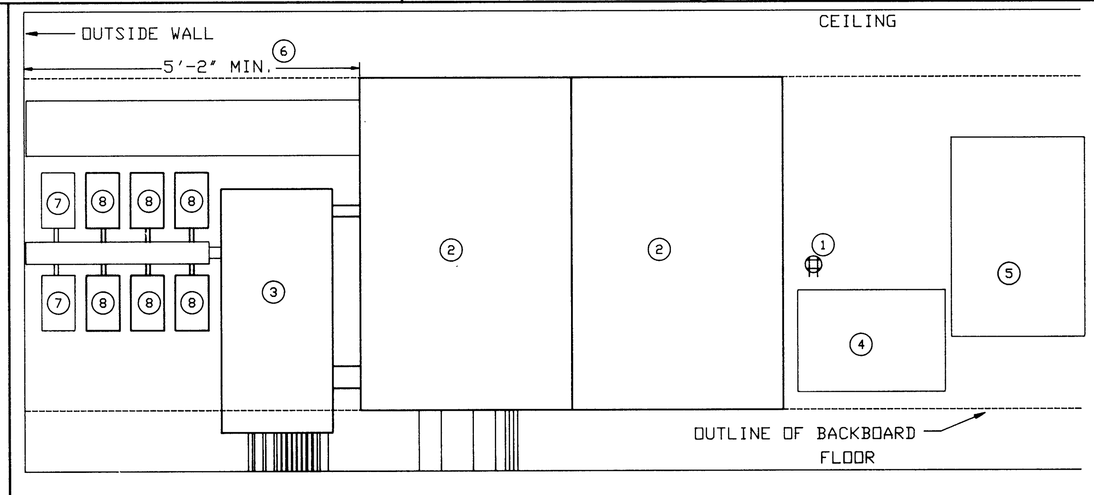

NOTES:
1. PROVIDE QUAD RECEPTACLE FOR TELEPHONE EQUIPMENT.
2. PROVIDE MDP (DOUBLE PANEL). OVERALL DIMENSIONS - 60"x38"x12.75" EACH.
3. PROVIDE PP-1. OVERALL DIMENSIONS - 44"x20"x5.75".
4. NEW LOCATION OF EXISTING TELEPHONE PUNCHDOWN BLOCKS.
5. EXISTING TELEPHONE J-BOX TO REMAIN.
6. COORDINATE THIS DIMENSION WITH OIL TANKS SO THAT OIL TANKS DO NOT ENTER WORKING CLEARANCE AREA.
7. ETR-P4 MOTOR STARTER & DISCONNECT TO REMAIN.
8. PROVIDE MAGNETIC MOTOR STARTES AND SWITCH CONTROLS FOR NEW P-1,P-2,P-3,P-4 AS SHOWN ON DRAWING E-2.

4 / E-8 PANELBOARD DISTRIBUTION NEW WORK DETAILS

SCALE: ¾" = 1'-0"

STATE OF CONNECTICUT — MICHAEL CALLAHAN — No. 14118 — LICENSED PROFESSIONAL ENGINEER

NETC DWG.NO. 30785 - 304	DEPARTMENT OF THE NAVY	NAVAL FACILITIES ENGINEERING COMMAND	
NETC SK.NO.	NAVAL EDUCATION AND TRAINING CENTER NEWPORT, RI.		
DSGN. ALP			
DR. ALP	REPAIR AND MODIFICATIONS TO: BUILDING #678		
BR. JMC			
DIR.			
APPROVED / DATE	DWG TITLE: SCHEDULES AND RISER DIAGRAMS		
SATISFACTORY TO / DATE 11-22-94	SIZE F	CODE IDENT NO. 80091	NAVFAC DRAWING NO. 2171478
	SCALE: AS SHOWN	SPEC.	CONSTR CONTR. NO. N62472-93-C-1996
			SHEET 41 E-8 OF 41

APPLIED THERMODYNAMICS ASSOCIATES, INC.
CONSULTING ENGINEERS
203-456-4554

ATA REF: C:\9413\9413CB 10/18/94 15:48