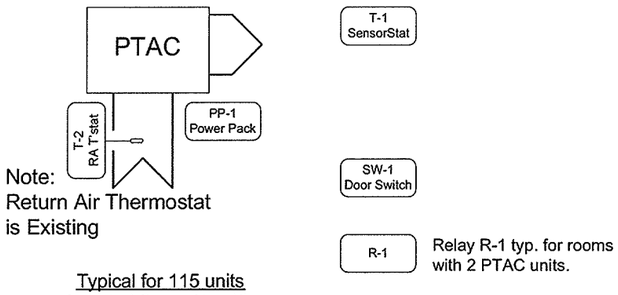

Note:
Return Air Thermostat is Existing

Typical for 115 units
Located floors 1st - 4th

Unit Type	Unit Qty	Rooms /Unit	PTACs /Unit	Sensors /Unit	Door Contacts /Unit
East Suites	4	2	4	1	1
Std. Suites	40	2	2	1	1
West Efficiencies	8	1	2	1	1
North Efficiencies	3	1	1	1	1
Totals	55		115	55	55

Desig.	Qty.	Part #	Description
PP-1-2	59	POWER PACK	x VAC/24VDC POWER SUPPLY W/RELAY
R-1	60	V120	24vac/vdc 20amp SPDT RELAY
SW-1	55	1078Cx	MAGNETIC DOOR SWITCH
T-1	55	2000X / 100077	SENSOR STAT
	55	100757	WIRING HARNESS FOR 2000X
T-2	115	EXISTING	RETURN AIR THERMOSTAT

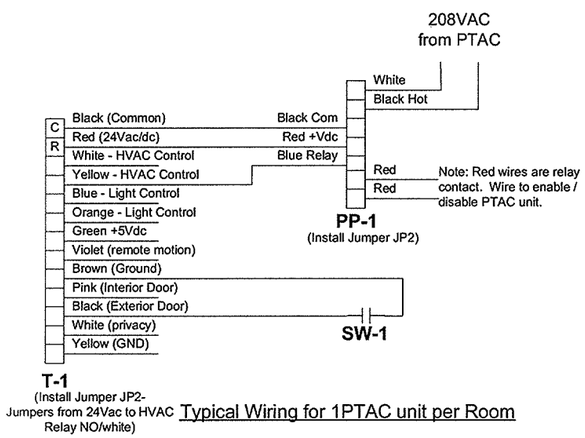

Typical Wiring for 1PTAC unit per Room

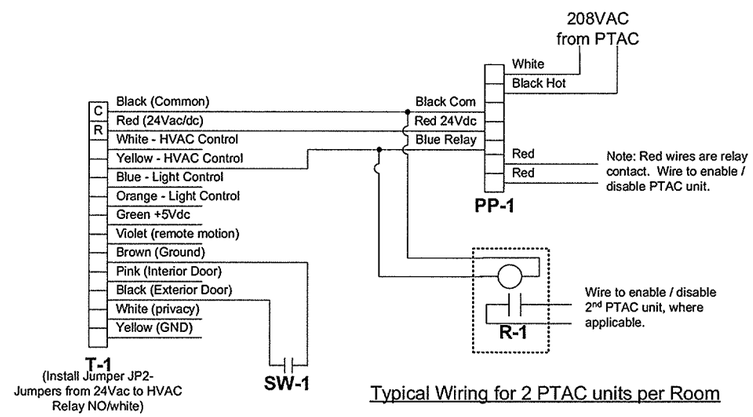

Typical Wiring for 2 PTAC units per Room

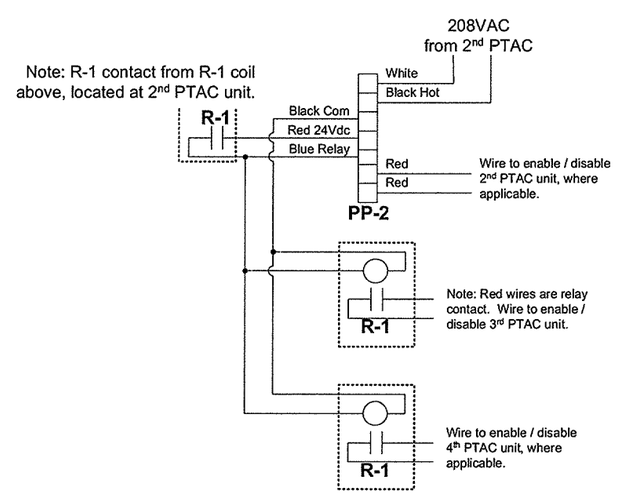

Typical Wiring for 4 PTAC units per Room

DIP Switch Settings
Switch 1&2 Set Back Set points - See Sequence of Operations
Switch 3 On Occupied Limits enabled - per owner set at 77/67.
Switch 4 Off Exterior Door used
Switch 5 Off 20 Second Exterior Door timeout disabled
Switch 6 Off Soft Bypass disabled
Switch 7 Off Fast Clock Test off
Switch 8 Off Local Motion Detect enable
Switch 9 On Interior Door switch not installed
Switch 10 OffExterior Door operates normally

Jumper Settings
JP1 installed
JP2 installed for HVAC relay power
JP3 not installed for Lighting control
JP5 not installed for Permanently bypassing energy management features

SEQUENCE OF OPERATIONS

PTAC Units

PTAC units are controlled from their exising return air temperature sensor to maintain heating and cooling demands. Onity Sensor 2000x will enable PTAC unit as follows:

Mode of Operation:
The SensorStat 2000x uses both the door contacts and the built-in infrared motion detector to determine the mode of operation. If the door is closed and motion is detected, the room is in the Occupied Mode and the associated PTAC is enabled.

If the door is closed and no motion is detected for 8 minutes, the room is in the Unoccupied Mode. The PTAC is disabled. If room temperature drops below the heating set back temperature set point or if the room temperature rises above the cooling set up temperature set point, the PTAC is enabled, until the temperature is 2degf above/below unoccupied set points. Set back set points will be:
Cool: 78 Heat: 66 Sw1 On, Sw2 Off

If the door is left open, the unit is disabled after 32 minutes, regardless whether or not motion is detected. The unit will not be allowed to restart until the door is closed, with the following exception: The unit will be allowed to restart under the Freeze guard feature (see below).

The Freeze guard feature of the SensorStat 2000x will enabled the PTAC whenever room temperature drops to 40degf.

The PTAC unit will enter a deep set back mode if no motion is detected for 15 hours. In this mode, the setback temperature is 82degf and 63degf. When motion is detected in the room, the unit resumes normal operation.

Notes:
1. T-1 includes passive infrared (PIR) sensor. Locate for best field of view. All sensors to be field located with owner's rep.
2. SW-1 located at main door entrance to room / suite.
3. SW-1, p/n 100688 for steel and wood doors, 2-piece, ¾" gap. Other gap distances to be verified by EMC prior to ordering. White color as requested by owner.
4. T-1 wiring to be any jacketed cable, 18 AWG.
5. PP-1 includes 24Vdc power supply with integral relay for control of PTAC, 208Vac.
6. Temperature control of PTAC via existing return air thermostat.
7. Surface mounted wire molding will be used as ceilings may have asbestos and can not be used or touched.

ATC-1

REVISIONS			
1	9/3/04	As-Builts	PB
REVISION	DATE	DESCRIPTION	BY

ARCH. CIV STR.
MECH PRMGR
ELEC
SATISFACTORY TO DATE
SATISFACTORY TO DATE
SATISFACTORY TO DATE
HEAD, ENGINEERING BRANCH DATE

DESIGN/BUILDER: COMBINED ENERGIES
ADDRESS: 539 WESTERN AVE., AUGUSTA, MAINE
ELECTRICAL MAINTENANCE & CONTROL, INC.
116 BUILDING ROAD
CRANSTON, RI 02920
DSGN: MSH/DRV DRWN: MSH/DRV CHK: MSH/DRV
SUPV
SUBMITTED BY:
(SIGNED) (TITLE) (DATE)

DEPARTMENT OF THE NAVY
NAVAL STATION
NAVAL FACILITIES ENGINEERING COMMAND
NEWPORT, R.I.

NAVAL STATION NEWPORT
DSM - BUILDING CONTROL UPGRADES
BLDG 172 BOQ - PTAC

CODE I.D. NO.
DRAWING SIZE:
CONST. CONT. NO.
N62470-97-D-5018 JN/05
SPEC. 04-97-5018
NAVFAC DRAWING NO.
2204015
SHEET 1 OF 1
NAVSTA#
35469-347

ATC-1A

ARCH	CIV STR				
MECH	PRMGR				
ELEC					
SATISFACTORY TO	DATE				
SATISFACTORY TO	DATE	1	9/3/04	As-Builts	PB
SATISFACTORY TO	DATE	REVISION	DATE	DESCRIPTION	BY
HEAD, ENGINEERING BRANCH	DATE	REVISIONS			

DESIGN/BUILDER: COMBINED ENERGIES
ADDRESS: 528 WESTERN AVE., AUGUSTA, MAINE

ELECTRICAL MAINTENANCE & CONTROL, INC
116 BUDLONG ROAD
CRANSTON, RI 02920

DSGN: MSH/DRV DRWN: MSH/DRV CHK: MSH/DRV

SUPV:

SUBMITTED BY:

(SIGNED) (TITLE) (DATE)

DEPARTMENT OF THE NAVY
NAVAL STATION

NAVAL FACILITIES ENGINEERING COMMAND
NEWPORT, R.I.

NAVAL STATION NEWPORT
DSM - BUILDING CONTROL UPGRADES
BLDG 172 - 1ST FLOOR PLAN

CODE I.D. NO.

DRAWING SIZE:

CONST. CONT. NO.
N62470-97-D-5018 JN/05

SPEC. 04-97-5018

NAVFAC DRAWING NO.
2204016

SHEET 1 OF 1

NAVSTA #
35470-347

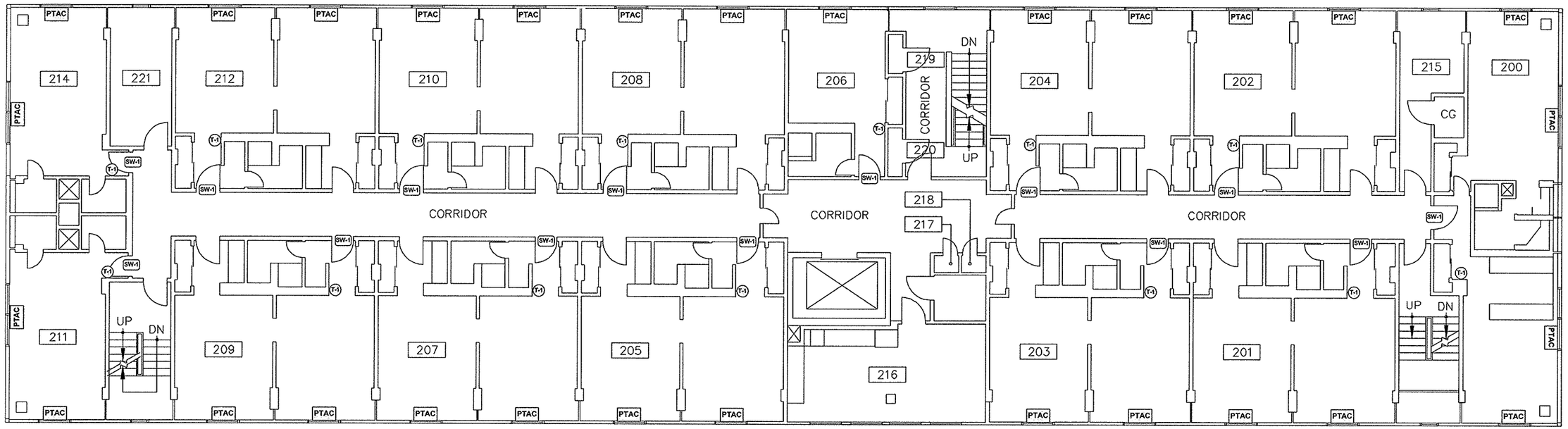

ATC-1B

REVISIONS			
REVISION	DATE	DESCRIPTION	BY
1	9/3/04	As-Builts	PB

CIV STR.
ARCH
PRMGR.
MECH
ELEC.

SATISFACTORY TO DATE
SATISFACTORY TO DATE
SATISFACTORY TO DATE
HEAD, ENGINEERING BRANCH DATE

DESIGN/BUILDER COMBINED ENERGIES
ADDRESS 526 WESTERN AVE., AUGUSTA, MAINE
ELECTRICAL MAINTENANCE & CONTROL, INC.
116 BUCKLING ROAD
CRANSTON, RI 02920

DSGN MSHDRV DRWN MSHDRV CHK MSHDRV
SUPV.
SUBMITTED BY
(SIGNED) (TITLE) (DATE)

DEPARTMENT OF THE NAVY
NAVAL STATION
NAVAL FACILITIES ENGINEERING COMMAND
NEWPORT, R.I.

NAVAL STATION NEWPORT
DSM - BUILDING CONTROL UPGRADES

BLDG 172 - 2ND FLOOR PLAN

CODE I.D. NO.
DRAWING SIZE:
CONST. CONT. NO.
N62470-97-D-5018 JN/05
SPEC. 04-97-5018
NAVFAC DRAWING NO.
2204017
SHEET 1 OF 1
NAVSTA #
35471-347

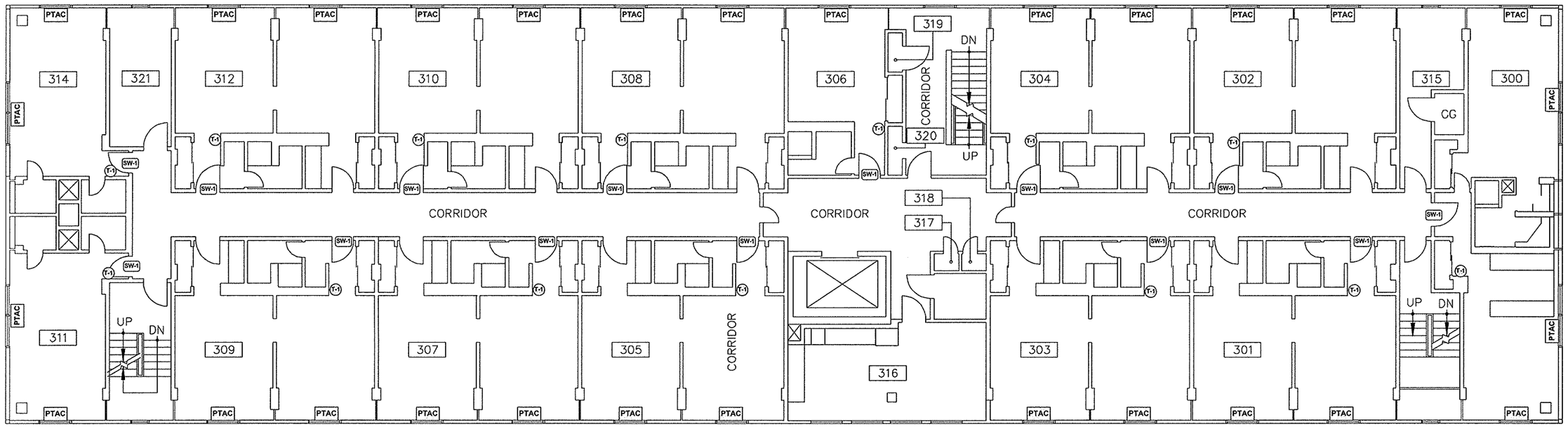

ARCH.	CIV. STR.				
MECH	PRMGR.				
ELEC.					
SATISFACTORY TO	DATE				
SATISFACTORY TO	DATE	1	9/3/04	As-Builts	PB
SATISFACTORY TO	DATE	REVISION	DATE	DESCRIPTION	BY
HEAD, ENGINEERING BRANCH	DATE	REVISIONS			

DESIGN/BUILDER: COMBINED ENERGIES
ADDRESS: 528 WESTERN AVE., AUGUSTA, MAINE

ELECTRICAL MAINTENANCE & CONTROL, INC.
116 BUDLONG ROAD
CRANSTON, RI 02920

DSGN: MSHDRV DRWN: MSHDRV CHK: MSHDRV

SUPV:

SUBMITTED BY:

(SIGNED) (TITLE) (DATE)

DEPARTMENT OF THE NAVY
NAVAL STATION

NAVAL FACILITIES ENGINEERING COMMAND
NEWPORT, R.I.

NAVAL STATION NEWPORT
DSM - BUILDING CONTROL UPGRADES
BLDG 172 - 3RD FLOOR PLAN

CODE I.D. NO.

DRAWING SIZE:

CONST. CONT. NO.
N62470-97-D-5018 JN/05

SPEC. 04-97-5018

NAVFAC DRAWING NO.
2204018

SHEET 1 OF 1

NAVSTA#
35472-347

ATC-1C

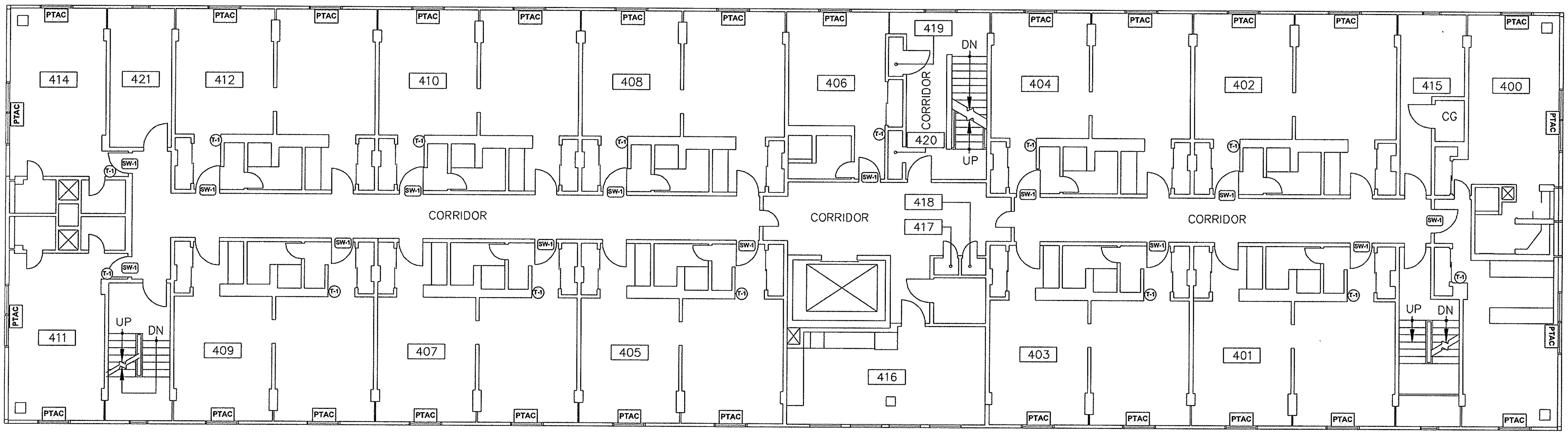

1	9/3/04	As-Builts	PB	
REVISION	DATE	DESCRIPTION	BY	

REVISIONS

ARCH	CIV STR	
MECH	PRMGR	
ELEC		
SATISFACTORY TO		DATE
SATISFACTORY TO		DATE
SATISFACTORY TO		DATE
HEAD, ENGINEERING BRANCH		DATE

DESIGN/BUILDER: COMBINED ENERGIES
ADDRESS: 526 WESTERN AVE., AUGUSTA, MAINE
ELECTRICAL MAINTENANCE & CONTROL, INC
116 BUDLONG ROAD
CRANSTON, RI 02920
DSGN: MSH/DRV DRWN. MSH/DRV CHK. MSH/DRV
SUPV.
SUBMITTED BY:
(SIGNED) (TITLE) (DATE)

DEPARTMENT OF THE NAVY
NAVAL FACILITIES ENGINEERING COMMAND
NAVAL STATION NEWPORT, R.I.

NAVAL STATION NEWPORT
DSM - BUILDING CONTROL UPGRADES

BLDG 172 - 4TH FLOOR PLAN

CODE I.D. NO.
DRAWING SIZE:
CONST. CONT. NO.
N62470-97-D-5018 JN/05
SPEC. 04-97-5018
NAVFAC DRAWING NO.
2204019
SHEET 1 OF 1
NAVSTA #
35473-347

ATC-1D