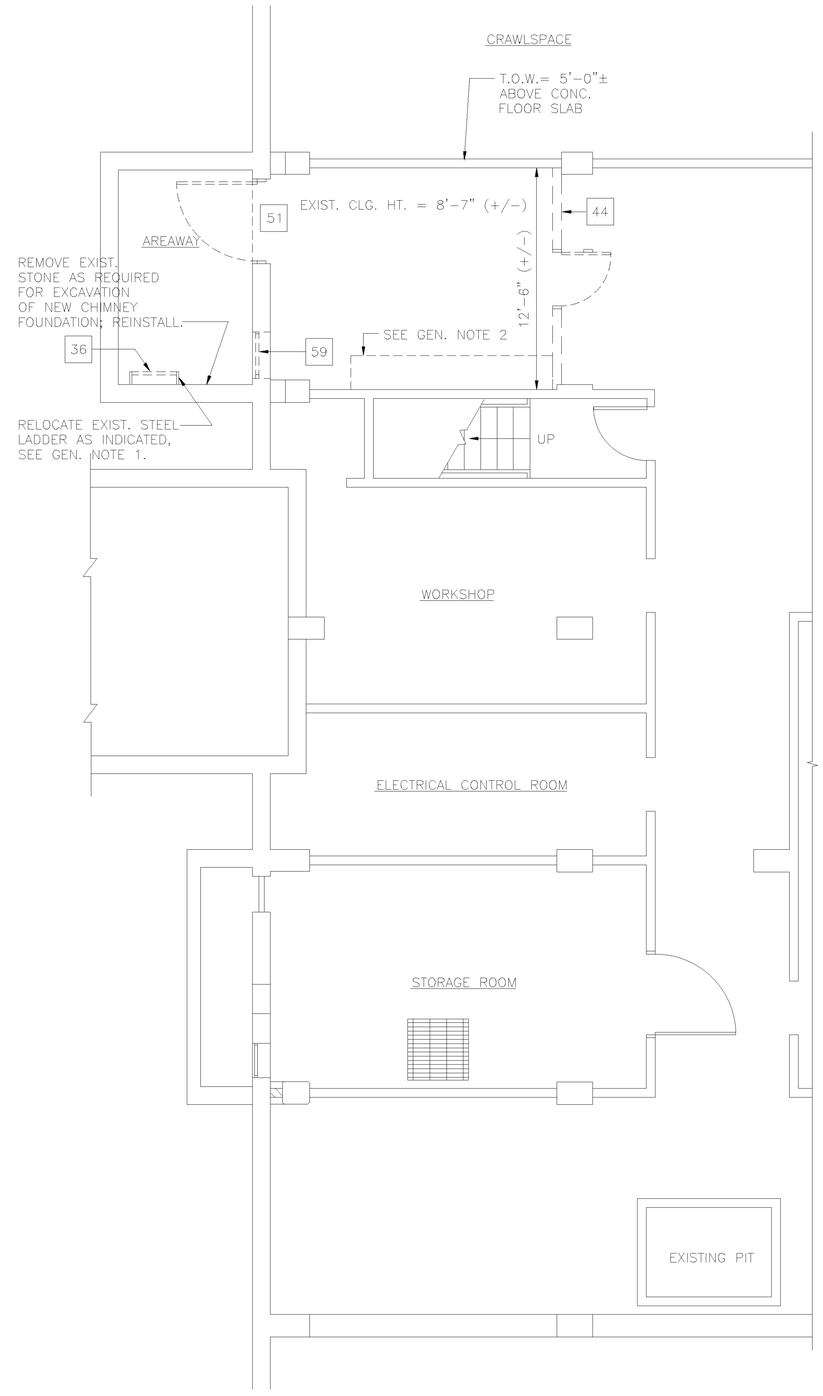

1 A-1 BASEMENT MECHANICAL ROOM PLAN – DEMOLITION
SCALE: 1/4" = 1'-0"

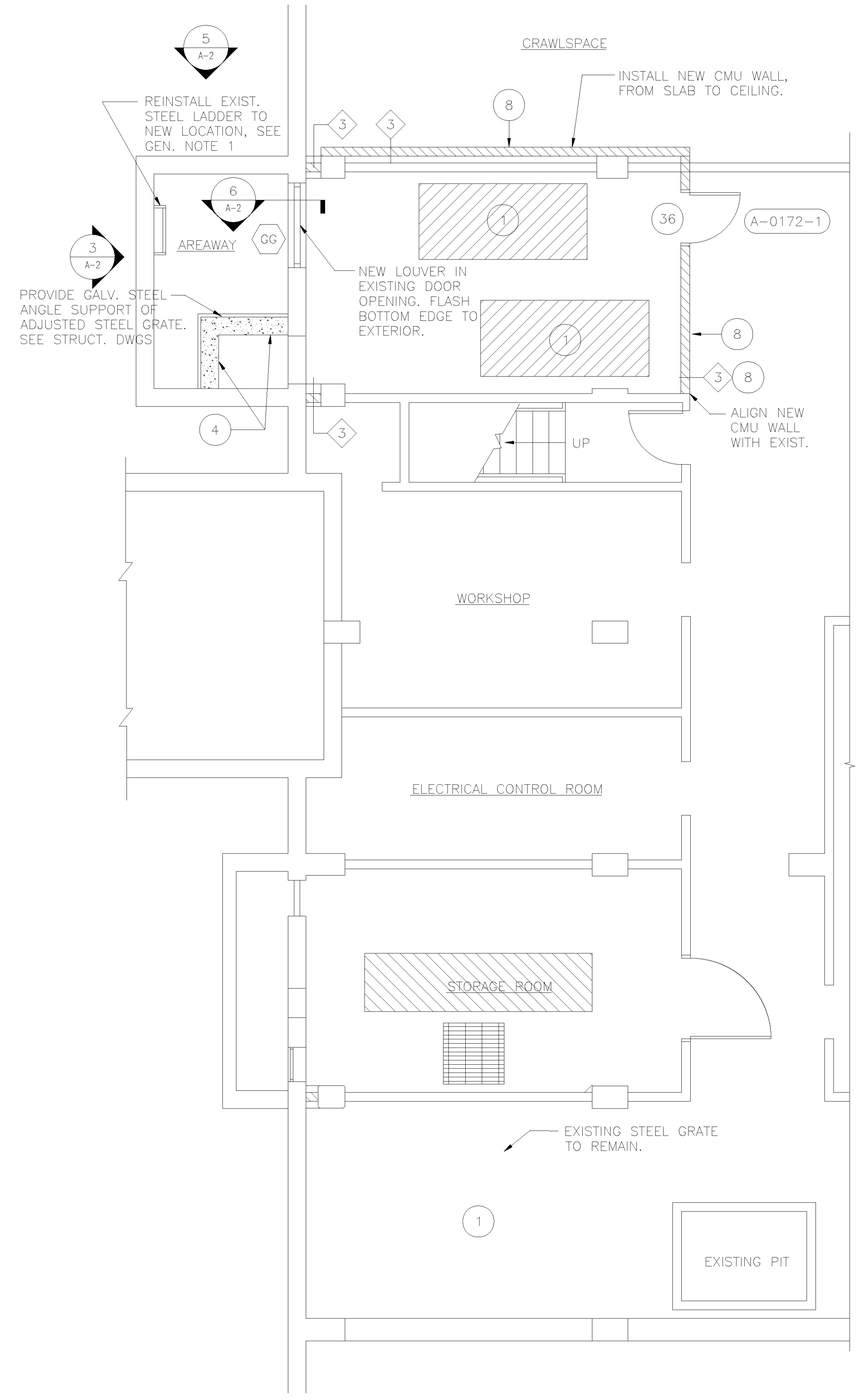

2 A-1 BASEMENT MECHANICAL ROOM PLAN – RENOVATIONS
SCALE: 1/4" = 1'-0"

GENERAL NOTES

1. REMOVE AND RELOCATE EXIST. STEEL LADDER TO NEW LOCATION AS INDICATED. PROVIDE NEW GALVANIZED PARTS AND FASTENERS AS REQUIRED FOR A COMPLETE, FINISHED, AND SAFE INSTALLATION. PREPARE, PRIME AND PAINT.

2. REMOVE EXISTING WOOD WORKBENCH, SALVAGE FOR REUSE, OR DISPOSE OF PER INSTRUCTION OF GOVERNMENT REPRESENTATIVE. APPROXIMATE DIMENSIONS ARE 2'-0" DEEP X 12'-0" WIDE X 2'-8" HIGH.

3. REMOVE EXIST. STEEL GRATES (3 TOTAL). ADJUST AND REINSTALL FOR FIT UP TO NEW FLUE ENCLOSURE. PROVIDE NEW GALVANIZED PARTS AND FASTENERS AS REQUIRED FOR A COMPLETE, FINISHED AND SAFE INSTALLATION. PREPARE, PRIME AND PAINT.

LEGEND:

- 1 DEMOLITION WORK NOTE – SEE DRAWING A-0000-2
- REMOVE FLOOR AREA
- REMOVE WALL
- REMOVE DOOR
- 2 RENOVATION WORK NOTE – SEE DRAWING A-0000-2
- NEW CONCRETE SLAB INFILL
- NEW CONCRETE PAD
- NEW WALL (OR WALL INFILL)
- NEW DOOR
- 0000-1 NEW DOOR – SEE DOOR SCHEDULE

GRAPHIC SCALE
1/4" = 1'-0"
0 2' 4' 8' 12'

N

AS BUILT | NAVSTA# 36006-352

REVISIONS

REV.	DATE	DESCRIPTION	BY

DESIGN/BUILDER: O. AHLBORG & SONS INC.
ADDRESS: 48 MOLTER ST, CRANSTON, RI 02910
DESIGNER OF RECORD FOR FINAL DESIGN:
MAGUIRE GROUP
33 COMMERCIAL ST, SUITE 1, FOXBOROUGH, MA 02035

DSGN: JAG	DRWN: SJB	CHK: JAG	
SUPV: T. S. BRYDA, P.E.			
SUBMITTED BY:			
(SIGNED)	(TITLE)	(DATE)	

ARCH. | CIV. STR. | MECH. | PRMGR. | ELEC.
SATISFACTORY TO | DATE
SATISFACTORY TO | DATE
SATISFACTORY TO | DATE
HEAD, ENGINEERING BRANCH | DATE

DEPARTMENT OF THE NAVY
NAVAL STATION
NAVAL FACILITIES ENGINEERING COMMAND
NEWPORT, R.I.

NAVAL STATION NEWPORT
DSM – DECENTRALIZATION
B.O.Q. BLDG. 172
MECHANICAL ROOM PLANS

CODE I.D. NO.
DRAWING SIZE: 22x34
CONST. CONT. NO. N62470-97-D-5018 -JN14/08
SPEC.
NAVFAC DRAWING NO. 222 8048
SHEET OF
PW NO. A-0172-1

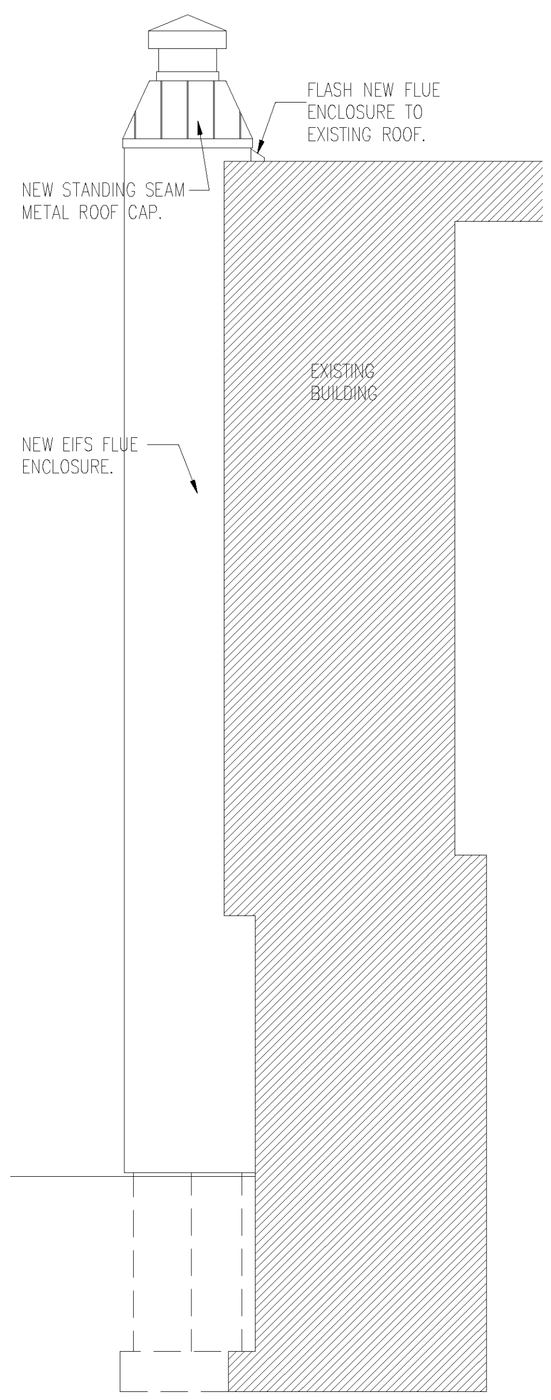

7 A-2 WEST ELEVATION
SCALE: 1/4" = 1'-0"

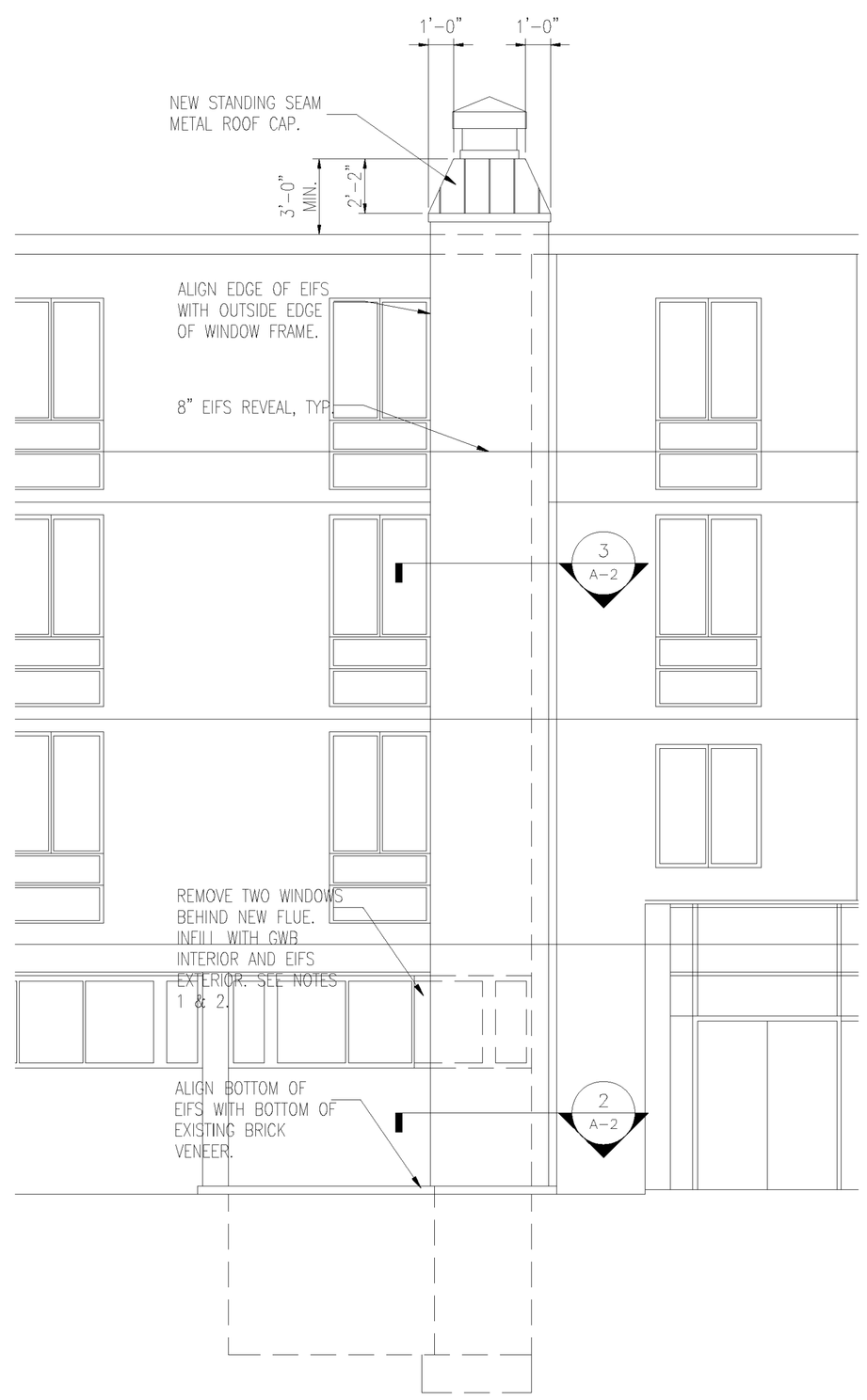

6 A-2 NORTH ELEVATION
SCALE: 1/4" = 1'-0"

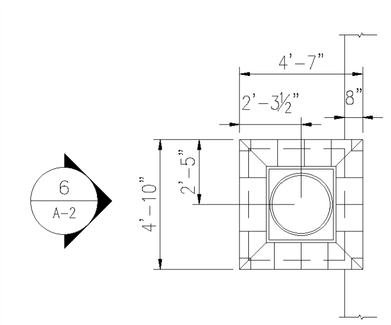

4 A-2 ROOF PLAN – RENOVATIONS
SCALE: 1/4" = 1'-0"

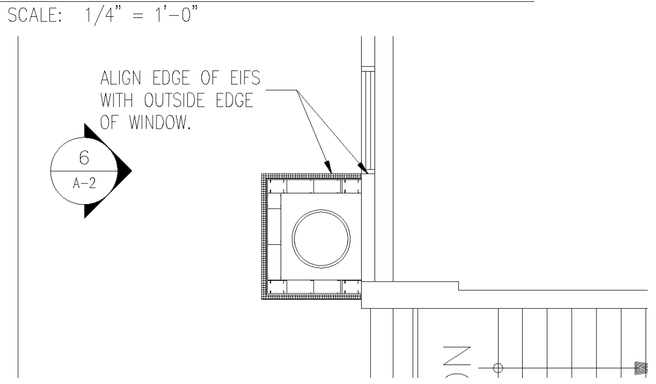

3 A-2 2ND & 3RD FLR PLAN – RENOVATIONS
SCALE: 1/4" = 1'-0"

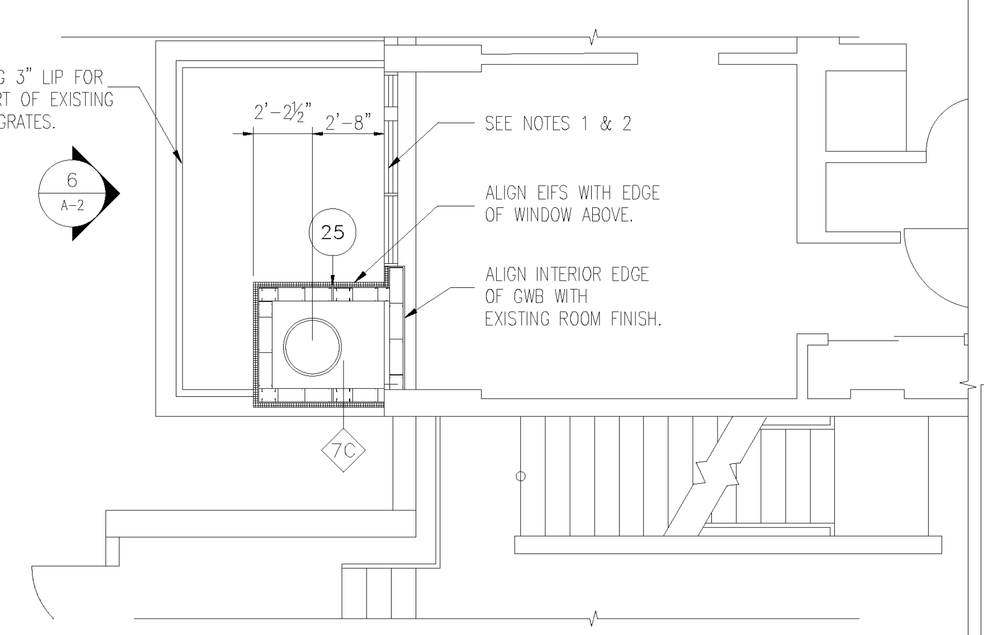

2 A-2 FIRST FLOOR PLAN – RENOVATIONS
SCALE: 1/4" = 1'-0"

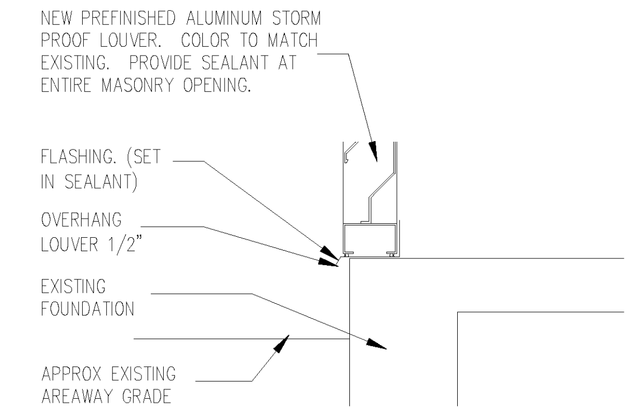

5 A-2 SILL DETAIL – LOUVER
SCALE: 1/4" = 1'-0"

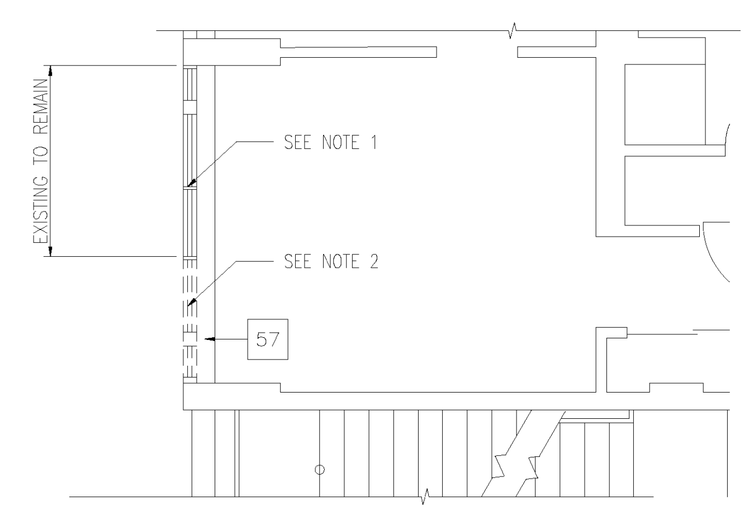

1 A-2 FIRST FLOOR PLAN – DEMOLITION
SCALE: 1/4" = 1'-0"

NOTES:

1. REMOVE ADJUST AND REINSTALL EXISTING ALUM. WINDOW SYSTEM AS REQUIRED FOR INSTALLATION OF NEW FLUE ENCLOSURE. PROVIDE NEW FASTENERS AND OTHER COMPONENTS AS REQUIRED FOR A COMPLETE, FINISHED, INSTALLATION. PROVIDE NEW SEALANT AT ENTIRE PERIMETER

2. REMOVE PORTION OF EXISTING ALUM. WINDOW SYSTEM AS REQUIRED FOR INSTALLATION OF NEW FLUE ENCLOSURE

LEGEND:

- 1 DEMOLITION WORK NOTE – SEE DRAWING A-000-2
- REMOVE FLOOR AREA
- REMOVE WALL
- REMOVE DOOR
- 2 RENOVATION WORK NOTE – SEE DRAWING A-000-2
- NEW CONCRETE SLAB INFILL
- NEW CONCRETE PAD
- NEW WALL (WALL INFILL)
- NEW DOOR – SEE DOOR SCHEDULE

GRAPHIC SCALE
1/4" = 1'-0"
0 2' 4' 8' 12'

N

AS BUILT | NAVSTA# 36007-352

REVISIONS			
REV.	DATE	DESCRIPTION	BY

ARCH. | CIV. STR. | MECH. | PRMGR. | ELEC.

DESIGN/BUILDER: O. AHLBORG & SONS INC.
ADDRESS: 48 MOLTER ST, CRANSTON, RI 02910
DESIGNER OF RECORD FOR FINAL DESIGN:
MACQUIRE GROUP
33 COMMERCIAL ST. SUITE 1, FOXBOROUGH, MA 02035
ESGRI: JAC DRWN: SGB CHK: JAC
SUPV: T. S. BRYDA, P.E.
SUBMITTED BY: (PRELIM) DATE
(SIGNED) (FINAL) DATE

DEPARTMENT OF THE NAVY
NAVAL STATION
NAVAL FACILITIES ENGINEERING COMMAND
NEWPORT, R.I.

NAVAL STATION NEWPORT
DSM – DECENTRALIZATION
BOQ BLDG. 0172
FLUE ENCLOSURE PLANS

CODE I.D. NO.
DRAWING SIZE: 22x34
CONST. CONT. NO. N62470-97-D-5018 -JN14/08
SPEC.
NAVFAC DRAWING NO. 222 8049
SHEET OF
FIW NO. A-0172-2

AS BUILT | NAVSTA# 36008-352

GRAPHIC SCALE
1/8" = 1'-0"
0 4' 8' 16' 24'

N

1 BLDG. 172 – B.O.Q.
M-1 SCALE: 1/8" = 1'-0"

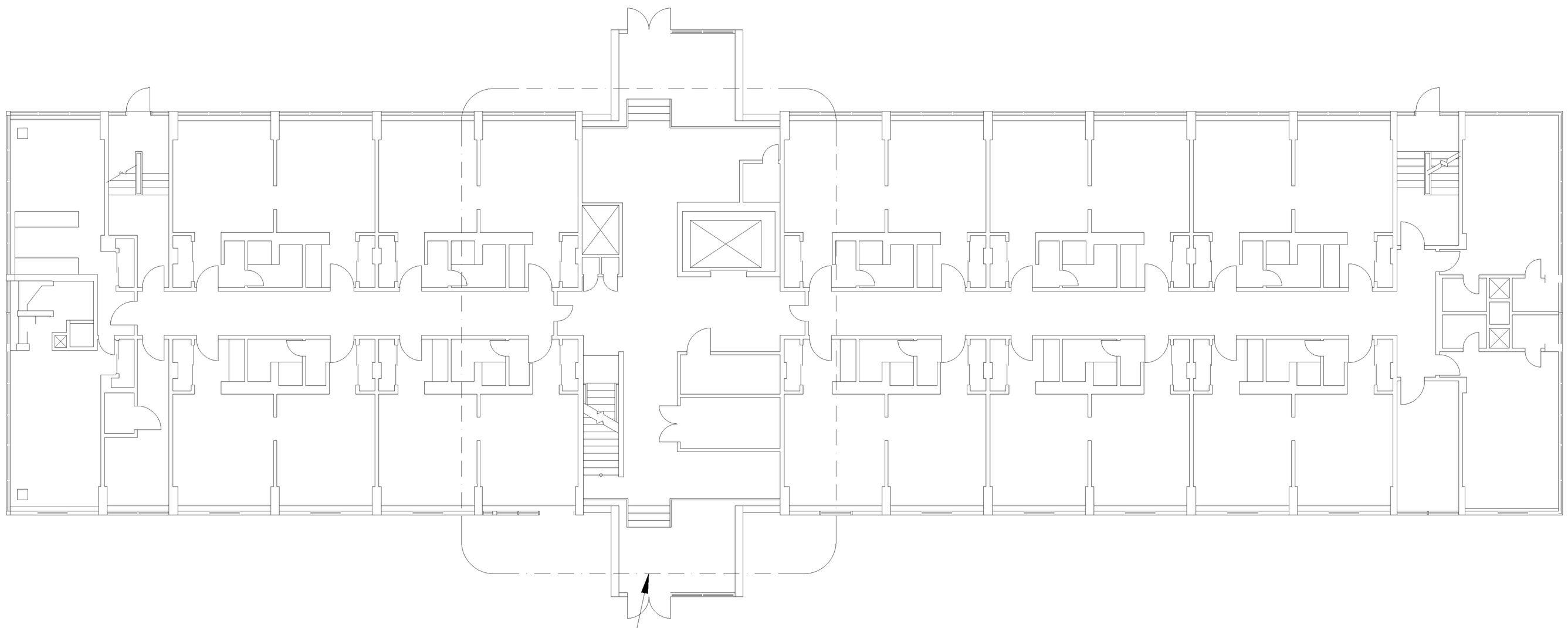

FIRST FLOOR SHOWN. ACTUAL WORK IS LOCATED IN THIS AREA IN BASEMENT MECHANICAL ROOM. SEE DWG. M-0172-2 AND M-0172-3 FOR ENLARGED MECHANICAL ROOM.

DEPARTMENT OF THE NAVY
NAVAL STATION NEWPORT, R.I.
NAVAL FACILITIES ENGINEERING COMMAND

NAVAL STATION NEWPORT
DSM – DECENTRALIZATION
B.O.Q. BLDG. 172
BUILDING PLAN

CODE I.D. NO.
DRAWING SIZE: 22x34
CONST. CONT. NO. N62470-97-D-5018 -JN14/08
SPEC.
NAVFAC DRAWING NO. 222 8050
SHEET OF
PW NO. M-0172-1

DESIGN/BUILDER: O. AHLBORG & SONS INC.
ADDRESS: 48 MOLTER ST, CRANSTON, RI 02910
DESIGNER OF RECORD FOR FINAL DESIGN: MAGUIRE GROUP
33 COMMERCIAL ST. SUITE 1, FOXBOROUGH, MA 02035
DSGN: TSB/MMD DRWN: MMD CHK: TSB
SUPV: T. S. BRYDA, P.E.
SUBMITTED BY:
(SIGNED) (TITLE) (DATE)

ARCH. | CIV. STR.
MECH. | PRIMER
ELEC.
SATISFACTORY TO DATE
SATISFACTORY TO DATE
SATISFACTORY TO DATE
HEAD, ENGINEERING BRANCH DATE

REVISIONS

REV.	DATE	DESCRIPTION	BY

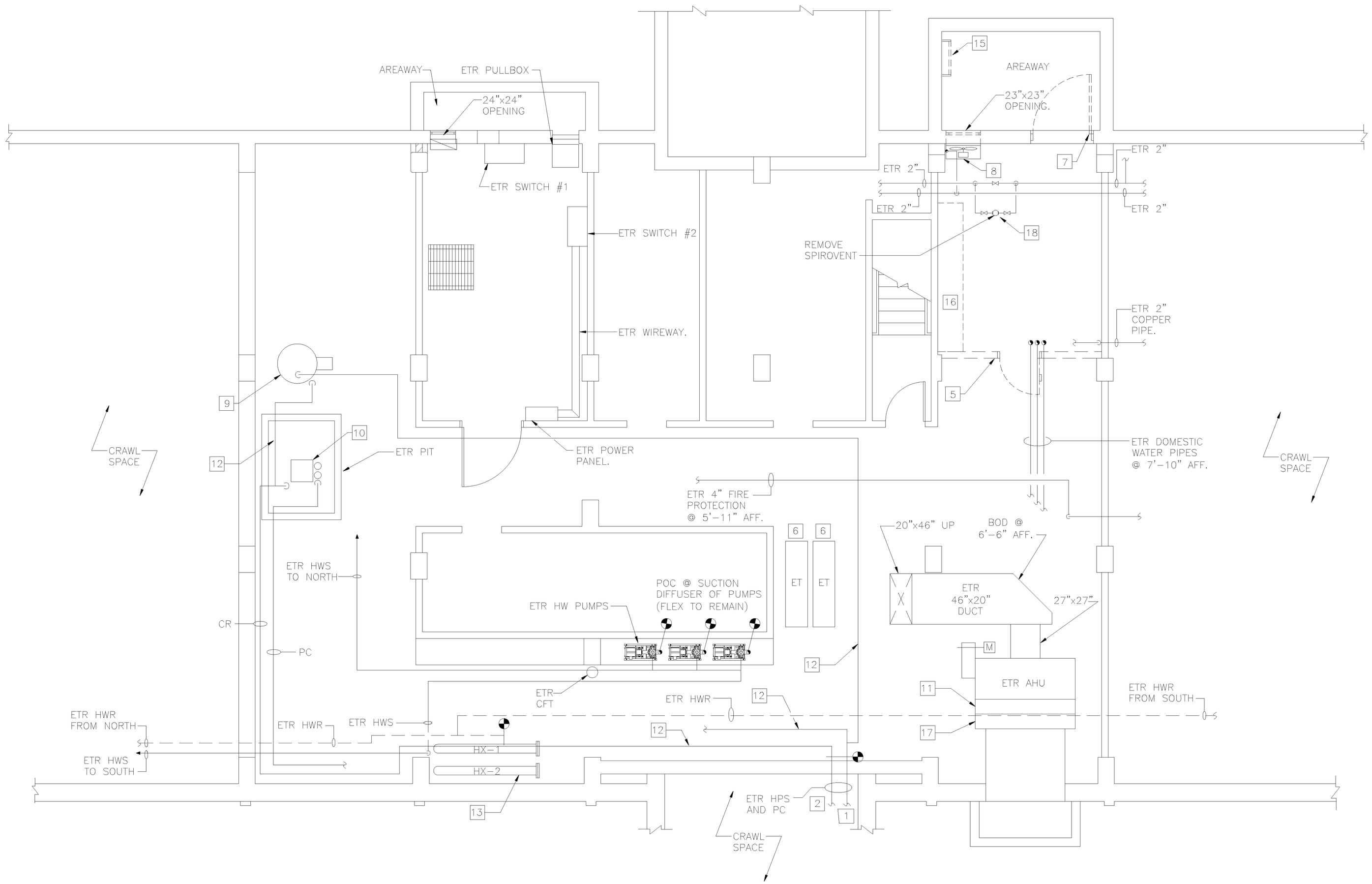

1 M-2 ENLARGED MECHANICAL ROOM DEMOLITION PLAN
SCALE: 1/4" = 1'-0"

AS BUILT | NAVSTA# 36009-352

REVISIONS

REV.	DATE	DESCRIPTION	BY

DESIGN/BUILDER: O. AHLBORG & SONS INC.
ADDRESS: 48 MOLTER ST, CRANSTON, RI 02910
DESIGNER OF RECORD FOR FINAL DESIGN:
MAGUIRE GROUP
33 COMMERCIAL ST, SUITE 1, FOXBOROUGH, MA 02035
DSGN: TSB/MMD DRWN: MMD CHK: TSB
SUPV: T. S. BRYDA, P.E.
SUBMITTED BY:
(SIGNED) (TITLE) (DATE)

ARCH. | CIV. STR.
MECH. | PRMGR.
ELEC.
SATISFACTORY TO | DATE
SATISFACTORY TO | DATE
SATISFACTORY TO | DATE
HEAD, ENGINEERING BRANCH | DATE

DEPARTMENT OF THE NAVY
NAVAL STATION
NAVAL FACILITIES ENGINEERING COMMAND
NEWPORT, R.I.

NAVAL STATION NEWPORT
DSM - DECENTRALIZATION
B.O.Q. BLDG. 172
ENLARGED PLAN

CODE I.D. NO.
DRAWING SIZE: 22x34
CONST. CONT. NO. N62470-97-D-5018 -JN14/08
SPEC.
NAVFAC DRAWING NO. 222 8051
SHEET OF
PW NO. M-0172-2

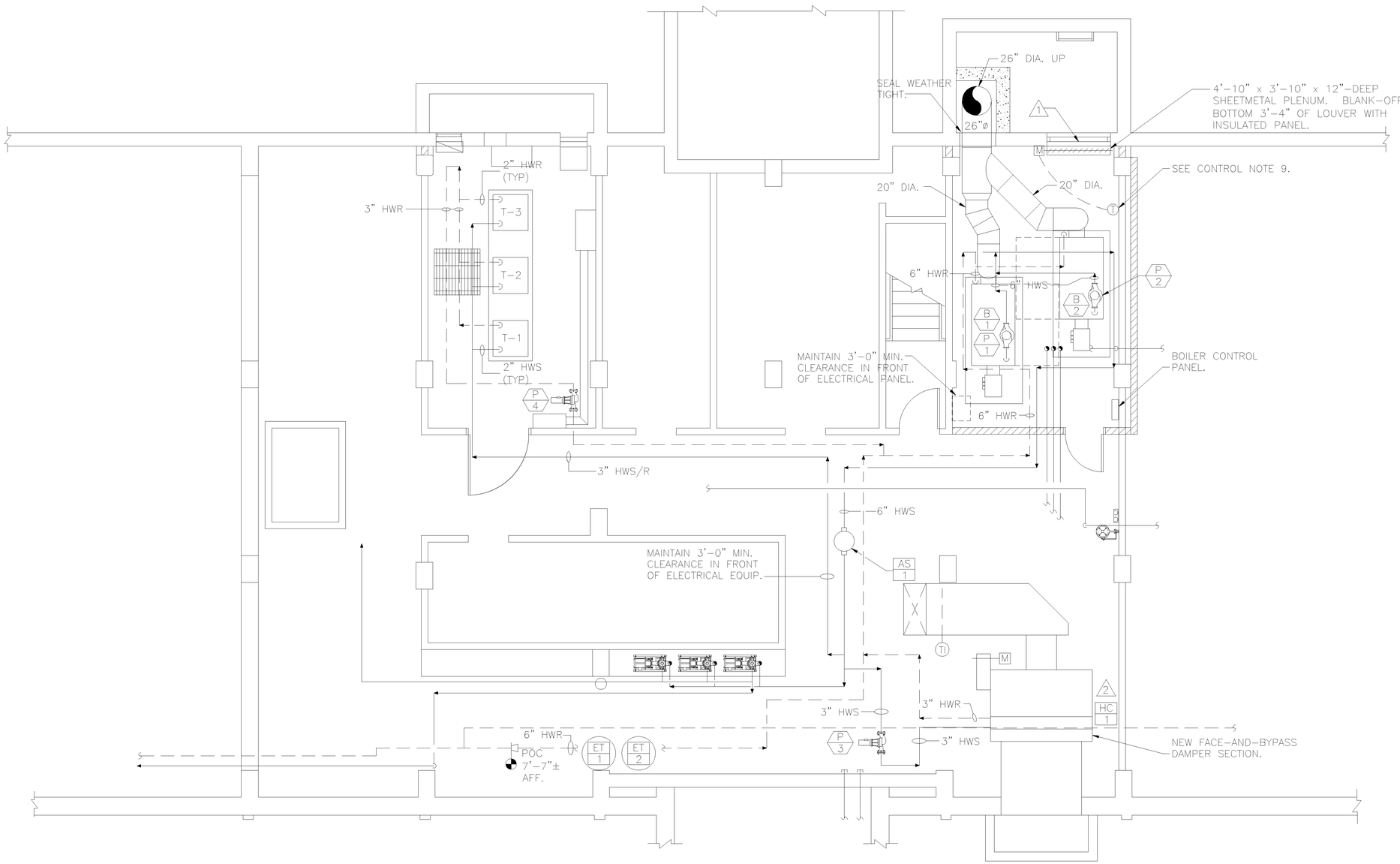

1 M-3 ENLARGED MECHANICAL ROOM NEW WORK PLAN
SCALE: 1/4" = 1'-0"

GRAPHIC SCALE
1/4" = 1'-0"
0 2' 4' 8' 12'

N

REV.	DATE	DESCRIPTION	BY

REVISIONS

DESIGN/BUILDER: O. AHLBORG & SONS INC.
ADDRESS: 48 MOLTER ST, CRANSTON, RI 02910
DESIGNER OF RECORD FOR FINAL DESIGN:
MAGUIRE GROUP
33 COMMERCIAL ST, SUITE 1, FOXBOROUGH, MA 02035
DSGN: TSB/MMD DRWN: MMD CHK: TSB
SUPV: T. S. BRYDA, P.E.
SUBMITTED BY:
(SIGNED) (TITLE) (DATE)

ARCH. CIV. STR.
MECH. PRMGR.
ELEC.
SATISFACTORY TO DATE
SATISFACTORY TO DATE
SATISFACTORY TO DATE
HEAD, ENGINEERING BRANCH DATE

DEPARTMENT OF THE NAVY
NAVAL STATION
NAVAL FACILITIES ENGINEERING COMMAND
NEWPORT, R.I.

NAVAL STATION NEWPORT
DSM - DECENTRALIZATION
B.O.Q. BLDG. 172
ENLARGED PLAN

CODE I.D. NO.
DRAWING SIZE: 22x34
CONST. CONT. NO. N62470-97-D-5018 -JN14/08
SPEC.
NAVFAC DRAWING NO. 222 8052
SHEET OF
PW NO. M-0172-3

AS BUILT | NAVSTA# 36010-352

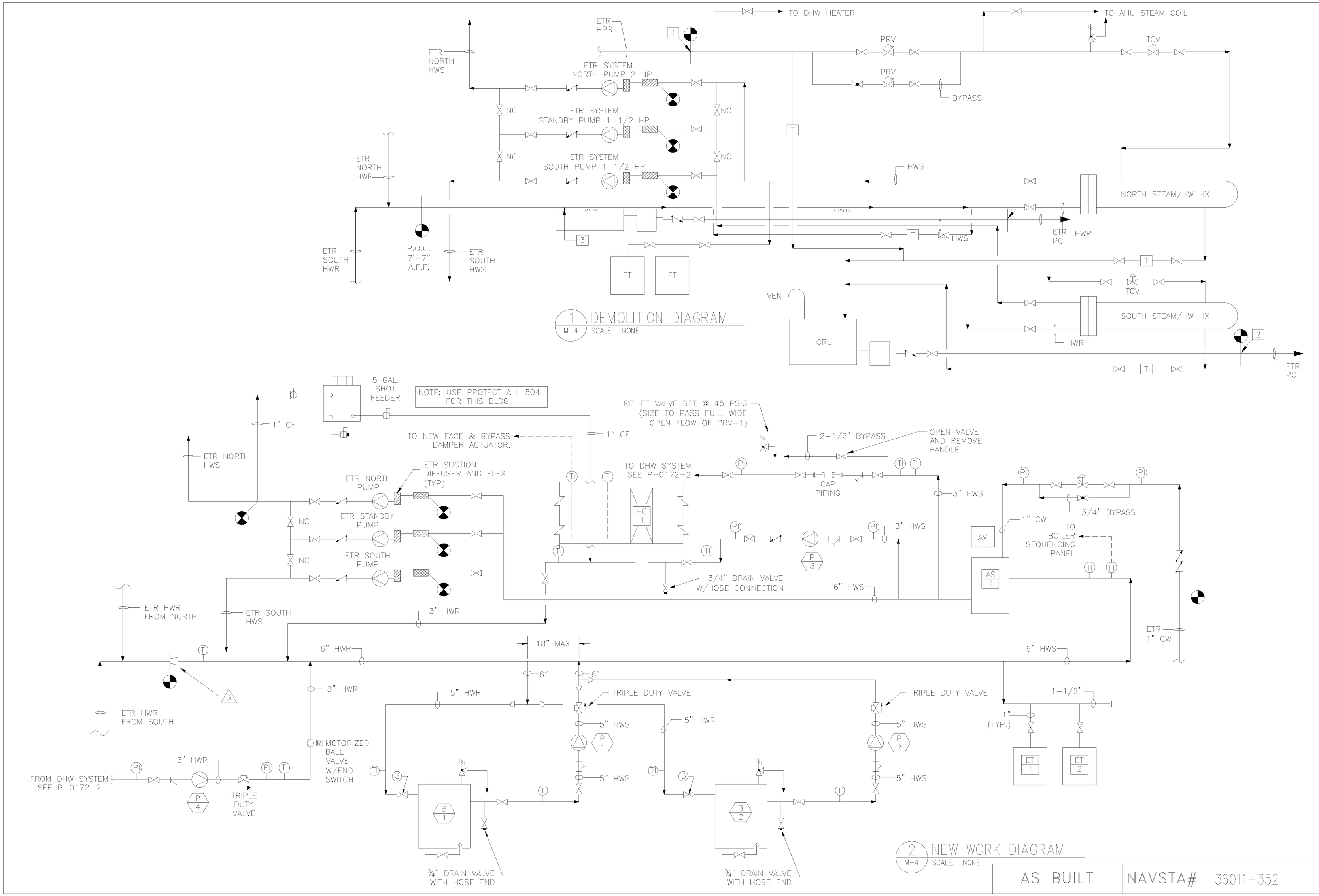

1 DEMOLITION DIAGRAM
M-4 SCALE: NONE

2 NEW WORK DIAGRAM
M-4 SCALE: NONE

AS BUILT | NAVSTA# 36011-352

REVISIONS

REV.	DATE	DESCRIPTION	BY

DESIGN/BUILDER: O. AHLBORG & SONS INC.
ADDRESS: 48 MOLTER ST, CRANSTON, RI 02910
DESIGNER OF RECORD FOR FINAL DESIGN: MAGUIRE GROUP
33 COMMERCIAL ST, SUITE 1, FOXBOROUGH, MA 02035
DSGN: TSB/MMD DRWN: JPB CHK: TSB
SUPV: T. S. BRYDA, P.E.
SUBMITTED BY:
(SIGNED) (TITLE) (DATE)

ARCH. | CIV. STR.
MECH. | PRMGR.
ELEC.
SATISFACTORY TO | DATE
SATISFACTORY TO | DATE
SATISFACTORY TO | DATE
HEAD, ENGINEERING BRANCH | DATE

DEPARTMENT OF THE NAVY
NAVAL STATION
NAVAL FACILITIES ENGINEERING COMMAND
NEWPORT, R.I.

NAVAL STATION NEWPORT
DSM - DECENTRALIZATION
B.O.Q. BLDG. 172
FLOW DIAGRAMS

CODE I.D. NO.
DRAWING SIZE: 22x34
CONST. CONT. NO. N62470-97-D-5018 -JN14/08
SPEC.
NAVFAC DRAWING NO. 222 8053
SHEET OF
PW NO. M-0172-4

STANDARD DEMOLITION NOTES:

1. CUT AND CAP EXISTING HIGH PRESSURE STEAM LINE AT ENTRANCE TO BUILDING.
2. CUT AND CAP PUMPED CONDENSATE LINE AT ENTRANCE TO BUILDING.
3. WORK SHOWN IN DARK LINE IS TO BE REMOVED. DEMOLITION WORK INCLUDES ALL PIPING, HANGERS, AND RELATED EQUIPMENT FOR ITEMS DESIGNATED.
4. WORK SHOWN IN LIGHT LINE IS EXISTING TO REMAIN (ETR).

SPECIFIC DEMOLITION NOTES:

5. REMOVE WALL. SEE ARCHITECTURAL DWGS.
6. REMOVE EXPANSION TANKS.
7. REMOVE DOOR. SEE ARCHITECTURAL DWGS.
8. REMOVE LOUVER AND FAN.
9. REMOVE DHW HEATER.
10. REMOVE CRU IN PIT.
11. REMOVE STEAM COIL IN AHU.
12. REMOVE ALL STEAM AND CONDENSATE PIPING BEYOND CUT/CAP POINTS. CAP SAFETY VALVE DISCHARGES ON ROOF.
13. REMOVE STEAM/HW HX (2).
14. NOT USED
15. RELOCATE LADDER.
16. REMOVE WORKBENCH SEE ARCH. DWG.
17. REMOVE 11"-WIDE BYPASS DAMPER SECTION, INCLUDING ACTUATOR.
18. REMOVE SPIROVENT UNIT AND VALVES. PROVIDE BLIND FLANGE.
19. REMOVE OUTDOOR AIR RESET CONTROLLERS.

STANDARD NEW WORK NOTES:

1. WORK SHOWN IN DARK LINE IS NEW.
2. WORK SHOWN IN LIGHT LINE IS EXISTING TO REMAIN (ETR).
3. THIS SYMBOL REPRESENTS A SHUTOFF VALVE. USE GATE VALVES FOR STEAM AND CONDENSATE SERVICE. USE BALL VALVES FOR 2" AND BELOW AND BUTTERFLY VALVES FOR 2½" AND ABOVE FOR HW SERVICE. USE TRIPLE DUTY VALVES IN LIEU OF CHECK AND BALANCE VALVES AT ALL BASE MOUNTED PUMPS.
4. BREECHING AND CHIMNEY MATERIALS SHALL BE STAINLESS STEEL, INNER LINER, ALUMINIZED STEEL OUTER JACKET, 1" AIR GAP, METALBESTOS MODEL PS OR EQUAL. PROVIDE EXIT CONE AND DRAIN SECTION ON ALL CHIMNEYS. PROVIDE BAROMETRIC DAMPER FOR EACH BOILER.
5. ALL EXISTING PIPING SIZES SHALL BE FIELD VERIFIED BY CONTRACTOR.
6. NOT USED.
7. NOT USED.
8. PROVIDE 4" THICK CONCRETE PAD FOR ALL NEW FLOOR MOUNTED EQUIPMENT.
9. ABATEMENT OF ASBESTOS CONTAINING MATERIALS AND/OR LEAD BASED PAINT SHALL BE IN ACCORDANCE WITH THE FINDINGS OF THE ASBESTOS REPORT AND APPLICABLE DIVISION 13 SPECIFICATION SECTIONS AND ALL GOVERNING AUTHORITIES WITH JURISDICTION.
10. ALL EXISTING PENETRATIONS AND OPENINGS THRU THE BOILER ROOM SHALL BE SEALED WITH FIRESTOP MATERIAL. THIS INCLUDES PIPING, CONDUIT, ETC. NEW PENETRATIONS SHALL BE SEALED WITH UL APPROVED/LISTED ASSEMBLY.
11. NOT USED.
12. INSTALL ALL PIPING SO AS NOT TO INTERFERE WITH ACCESS TO EQUIPMENT MAINTENANCE AREAS.
13. REPLACE ALL EXISTING EXPANSION TANKS WITH NEW BALDDER STYLE.
14. PROVIDE MANUAL BYPASS AT ALL PRV'S AND CONTROL VALVES.
15. NOT USED.
16. PROVIDE TRIPLE DUTY VALVE AT DISCHARGE OF ALL PUMPS.

SPECIFIC NEW WORK NOTES:

1. PROVIDE NEW LOUVER. SEE ARCHITECTURAL DWGS.
2. PROVIDE NEW HW COIL IN AHU W/FACE AND BYPASS SECTION AND ACTUATOR.
3. TRANSITION FROM EXISTING PIPING TO 6" AS SHOWN.

CONTROL NOTES:

1. BOILER IS ENABLED VIA BOILER SEQUENCING PANEL. LEAD BOILER SHOULD ALWAYS BE ENABLED; LAG BOILER SHOULD BE ENABLED WHEN HWS TEMPERATURE DROPS BELOW SETPOINT.
2. INTERLOCK P-1/P-2 WITH RESPECTIVE BOILER.
3. EXISTING HW PUMPS SHALL MAINTAIN CURRENT OPERATION.
4. BURNER(S) SHALL FIRE TO MAINTAIN HWS SETPOINT IN ACCORDANCE WITH O.A. RESET SCHEDULE. (SEE NOTE 10)
5. PUMP P-3 RUNS CONSTANTLY WHEN O.A. TEMPERATURE IS BELOW 55°F (ADJUSTABLE).
6. PUMP P-4 SHALL CYCLE ON/OFF TO MAINTAIN DHW SETPOINT AT INDIRECT HEATERS.
7. NOT USED
8. NEW DUCT TEMPERATURE TRANSMITTER MODULATES AHU FACE & BYPASS DAMPER TO MAINTAIN LAT OF 70°F (ADJUSTABLE).
9. PROVIDE T'STAT TO OPEN DAMPER UPON A CALL FOR COOLING. WHEN BOILER STARTS, DAMPER SHALL ALSO OPEN.

BOILER SCHEDULE (B)

TAG No.	BASIS OF DESIGN MFR.	BASIS OF DESIGN MODEL No.	GAS INPUT (MBH)	NET IBR OUTPUT (MBH)	FLUE SIZE	BLOWER MOTOR HP	ELECTRICAL V-PH-HZ	REMARKS
B-1-0172	WEIL-MCLAIN	BG-988W	2497	1732	14"	2	208/3/60	①②③④
B-2-0172	WEIL-MCLAIN	BG-988W	2497	1732	14"	2	208/3/60	①②③④

① PROVIDE WITH FULLY MODULATING BURNER.
② PROVIDE GAS PRESSURE REGULATOR
③ PROVIDE WITH UL/CSD-1 GAS TRAIN
④ PROVIDE BOILER SEQUENCING VIA FIREYE E340. TIE FAILURE, STATUS, AND ALARM SIGNALS INTO BUILDING AUTOMATION SYSTEM (BAS).

PUMP SCHEDULE (P)

TAG No.	BASIS OF DESIGN MFGR.	BASIS OF DESIGN MOD. NO.	STYLE	DESIGN POINT GPM	DESIGN POINT HEAD (FT)	MOTOR BHP	MOTOR MTR HP	MOTOR RPM	MOTOR V-PH-HZ	REMARKS
P-1-0172	TACO	KV-4007	INLINE	205	20	1.5	2	1160	208/3/60	
P-2-0172	TACO	KV-4007	INLINE	205	20	1.5	2	1160	208/3/60	
P-3-0172	TACO	1630	INLINE	95	14		1/2	1750	115/1/60	
P-4-0172	TACO	KV-1509	INLINE	90	60	2.5	3.0	1760	208/3/60	

HEATING COIL SCHEDULE (HC)

TAG No.	BASIS OF DESIGN MFR	BASIS OF DESIGN MODEL	HOT WATER COIL DATA CFM	MBH	EAT (°F)	LAT (°F)	EWT (°F)	LWT (°F)	GPM	APD (IN.W.G.)	REMARKS
HC-1-0172	TRANE	–	9000	729	9	84	180	165	25	–	① ② ③④

① EXISTING AHU IS TRANE MODEL TBDB17AL0C3DRR00.
② EXISTING STEAM HEATING COIL IS 14"-WIDE x 33"-HIGH x 90"-LONG.
③ PROVIDE NEW FACE-AND-BYPASS DAMPER SECTION WITH ACTUATOR.
④ PROVIDE PRE AND POST TAB MEASUREMENTS OF COIL AIRFLOW, EAT, LAT, MOTOR AMPS, ETC.

EXPANSION TANK SCHEDULE (ET)

TAG No.	SYSTEM	BASIS OF DESIGN MANUFACTURER	BASIS OF DESIGN MODEL NO.	TYPE	GALS.	ACCEPT. VOL.	SYSTEM EXPANSION VOLUME	CHARGE PRESSURE (PSIG)	HGT.	TANK ø	REMARKS
ET-1-0172	HW	TACO	CA-600	BLADDER	158	158	300	25	74"	30"	
ET-2-0172	HW	TACO	CA-600	BLADDER	158	158	300	25	74"	30"	

10. HW RESET SCHEDULE

BOILER TEMP.	O.A. TEMP
200°F	15°F
160°F	55°F

DHW SHALL BE PRIORITIZED AS FOLLOWS:

WHEN THERE IS A CALL TO RAISE THE DHW TEMPERATURE WITHIN THE INDIRECT HEATERS TO MAINTAIN SET POINT, THE DHW PUMP SHALL BE ENERGIZED. IF AFTER 5 MINUTES (ADJUSTABLE), THE DHW HAS NOT ATTAINED SET POINT TEMP., THE BOILER HW SHALL REVERT BACK TO 200°. ONCE INDIRECTS ARE SATISFIED BOILERS SHALL REVERT BACK TO RESET SCHEDULE.

AS BUILT | NAVSTA# 36012-352

REVISIONS

REV.	DATE	DESCRIPTION	BY

DESIGN/BUILDER: O. AHLBORG & SONS INC.
ADDRESS: 48 MOLTER ST, CRANSTON, RI 02910
DESIGNER OF RECORD FOR FINAL DESIGN:
MACQUIRE GROUP
33 COMMERCIAL ST. SUITE 1, FOXBOROUGH, MA 02035
DSGN: TSB/MMD DRWN: JPB CHK: TSB
SUP'V: T. S. BRYDA, P.E.
SUBMITTED BY: (TITLE) (DATE)

ARCH. DIV. STR.
MECH. PRMGR.
ELEC. DATE
SATISFACTORY TO DATE
SATISFACTORY TO DATE
SATISFACTORY TO DATE
HEAD, ENGINEERING BRANCH DATE

DEPARTMENT OF THE NAVY
NAVAL STATION
NAVAL FACILITIES ENGINEERING COMMAND
NEWPORT, R.I.

NAVAL STATION NEWPORT
DSM - DECENTRALIZATION
B.O.Q. BLDG. 172
NOTES & SCHEDULES

CODE I.D. NO.
DRAWING SIZE: 22x34
CONST. CONT. NO. N62470-97-D-5018 -JN14/08
SPEC.
NAVFAC DRAWING NO. 222 8054
SHEET OF
PW NO. M-0172-5

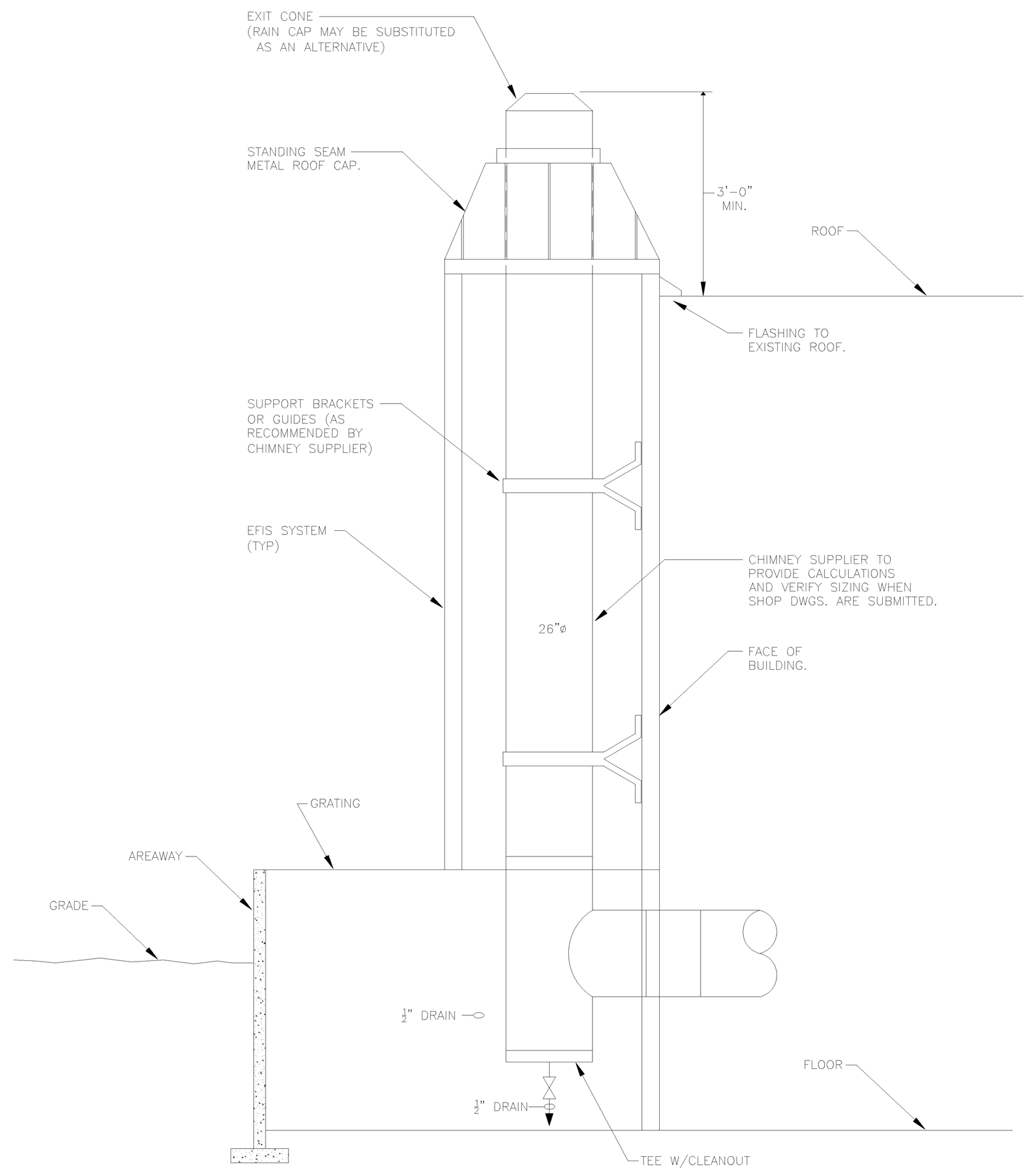

1 M-6 CHIMNEY DETAIL
NO SCALE

AS BUILT | NAVSTA# 36013-352

DESIGN/BUILDER: O. AHLBORG & SONS INC.
ADDRESS: 48 MOLTER ST, CRANSTON, RI 02910
DESIGNER OF RECORD FOR FINAL DESIGN:
MAGUIRE GROUP
33 COMMERCIAL ST, SUITE 1, FOXBOROUGH, MA 02035
DSGN: TSB/MMD DRWN: MMD CHK: TSB
SUPV: T. S. BRYDA, P.E.
SUBMITTED BY:
(SIGNED) (TITLE) (DATE)

ARCH. | OV. STR.
MECH. | PRMGR.
ELEC.
SATISFACTORY TO | DATE
SATISFACTORY TO | DATE
SATISFACTORY TO | DATE
HEAD, ENGINEERING BRANCH | DATE

REV. | DATE | DESCRIPTION | BY
REVISIONS

DEPARTMENT OF THE NAVY
NAVAL STATION
NAVAL FACILITIES ENGINEERING COMMAND
NEWPORT, R.I.

NAVAL STATION NEWPORT
DSM - DECENTRALIZATION
B.O.Q. BLDG. 172
CHIMNEY DETAIL

CODE I.D. NO.
DRAWING SIZE: 22x34
CONST. CONT. NO.
N62470-97-D-5018
-JN14/08
SPEC.
NAVFAC DRAWING NO.
222 8055
SHEET OF
PW NO.
M-0172-6

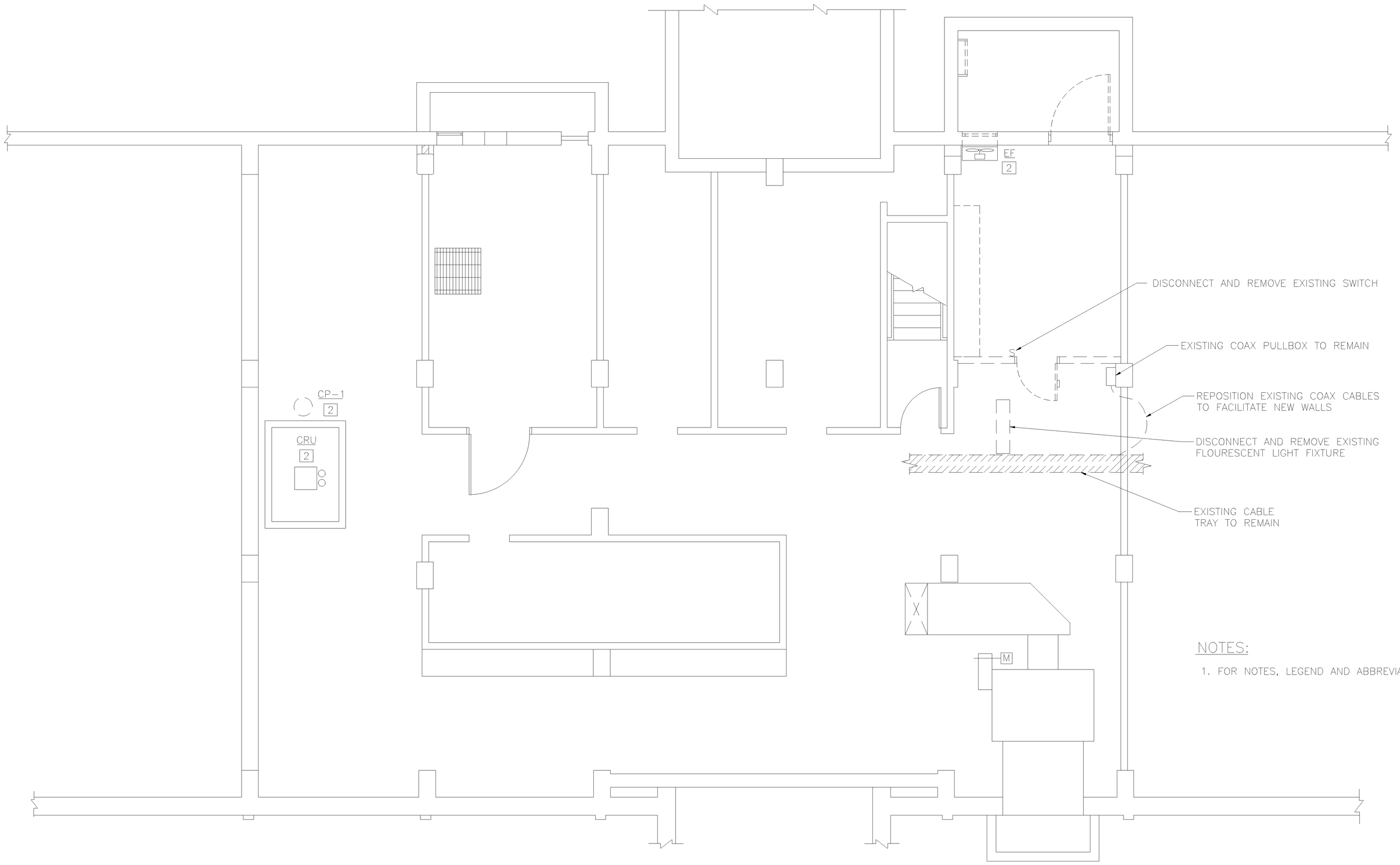

NOTES:

1. FOR NOTES, LEGEND AND ABBREVIATIONS, SEE DRAWING E-000-1.

1 E-1 ELECTRICAL DEMOLITION PLAN
SCALE: 1/4" = 1'-0"

GRAPHIC SCALE
1/4" = 1'-0"
0 2' 4' 8' 12'

N

AS BUILT | NAVSTA# 36014-352

REV.	DATE	DESCRIPTION	BY

REVISIONS

DESIGN/BUILDER: O. AHLBORG & SONS INC.
ADDRESS: 48 MOLTER ST, CRANSTON, RI 02910
DESIGNER OF RECORD FOR FINAL DESIGN:
MAGUIRE GROUP
33 COMMERCIAL ST, SUITE 1, FOXBOROUGH, MA 02035
DSGN: DRWN: CHK:
SUPV: T. S. BRYDA, P.E.
SUBMITTED BY:
(SIGNED) (TITLE) (DATE)

ARCH. | OV. STR.
MECH. | PRMGR.
ELEC.
SATISFACTORY TO | DATE
SATISFACTORY TO | DATE
SATISFACTORY TO | DATE
HEAD, ENGINEERING BRANCH | DATE

DEPARTMENT OF THE NAVY
NAVAL STATION
NAVAL FACILITIES ENGINEERING COMMAND
NEWPORT, R.I.

NAVAL STATION NEWPORT
DSM - DECENTRALIZATION
B.O.Q. BLDG. 172
ELECTRICAL DEMOLITION PLAN

CODE I.D. NO.
DRAWING SIZE: 22x34
CONST. CONT. NO.
N62470-97-D-5018
-JN14/08
SPEC.
NAVFAC DRAWING NO.
222 8056
SHEET OF
PW NO.
E-0172-1

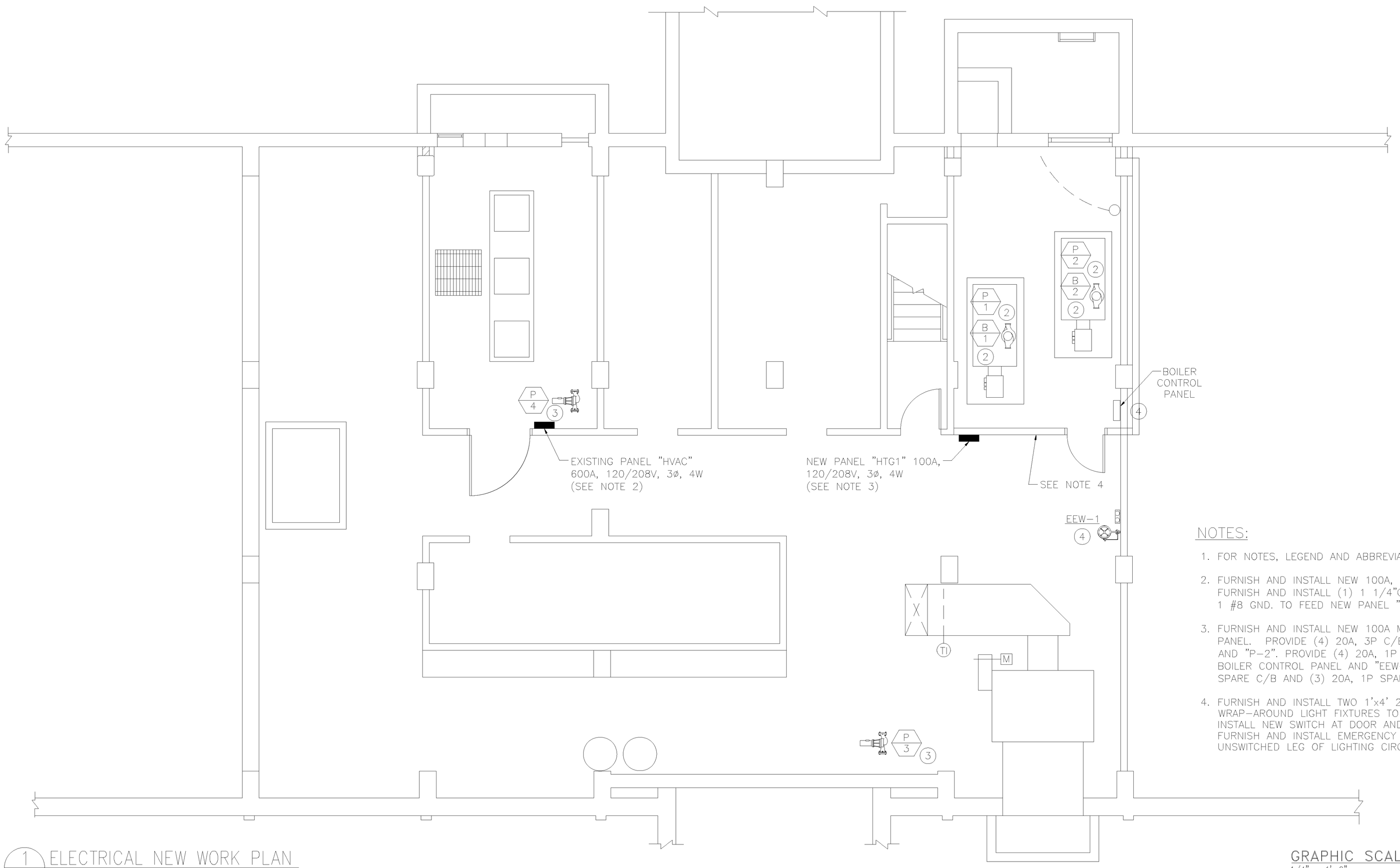

1 E-2 ELECTRICAL NEW WORK PLAN
SCALE: 1/4" = 1'-0"

NOTES:

1. FOR NOTES, LEGEND AND ABBREVIATIONS, SEE DRAWING E-000-1.
2. FURNISH AND INSTALL NEW 100A, 3P C/B IN EXISTING SPACE. FURNISH AND INSTALL (1) 1 1/4"C-4 #3, 1 #8 GND. TO FEED NEW PANEL "HTG1".
3. FURNISH AND INSTALL NEW 100A MCB, 120/208V, 3ø, 4W, 30P PANEL. PROVIDE (4) 20A, 3P C/B'S FOR "B-1", "B-2", "P-1" AND "P-2". PROVIDE (4) 20A, 1P C/B'S FOR "P-3", "P-4" BOILER CONTROL PANEL AND "EEW-1". PROVIDE (1) 20A, 3P SPARE C/B AND (3) 20A, 1P SPARE C/B'S.
4. FURNISH AND INSTALL TWO 1'x4' 2-LAMP FLUORESCENT WRAP-AROUND LIGHT FIXTURES TO MATCH EXISTING. FURNISH AND INSTALL NEW SWITCH AT DOOR AND CONNECT TO EXISTING CIRCUIT. FURNISH AND INSTALL EMERGENCY BATTERY UNIT AND CONNECT TO UNSWITCHED LEG OF LIGHTING CIRCUIT.

GRAPHIC SCALE
1/4" = 1'-0"
0 2' 4' 8' 12'

N

AS BUILT | NAVSTA# 36015-352

REV.	DATE	DESCRIPTION	BY

REVISIONS

DESIGN/BUILDER: O. AHLBORG & SONS INC.
ADDRESS: 48 MOLTER ST, CRANSTON, RI 02910
DESIGNER OF RECORD FOR FINAL DESIGN:
MAGUIRE GROUP
33 COMMERCIAL ST, SUITE 1, FOXBOROUGH, MA 02035
DSGN: DRWN: CHK:
SUPV: T. S. BRYDA, P.E.
SUBMITTED BY: (TITLE) (DATE)

ARCH. | CIV. STR.
MECH. | PRMGR.
ELEC.
SATISFACTORY TO | DATE
SATISFACTORY TO | DATE
SATISFACTORY TO | DATE
HEAD, ENGINEERING BRANCH | DATE

DEPARTMENT OF THE NAVY
NAVAL STATION
NAVAL FACILITIES ENGINEERING COMMAND
NEWPORT, R.I.

NAVAL STATION NEWPORT
DSM - DECENTRALIZATION
B.O.Q. BLDG. 172
ELECTRICAL NEW WORK PLAN

CODE I.D. NO.
DRAWING SIZE: 22x34
CONST. CONT. NO.
N62470-97-D-5018
-JN14/08
SPEC.
NAVFAC DRAWING NO.
222 8057
SHEET OF
PW NO.
E-0172-2

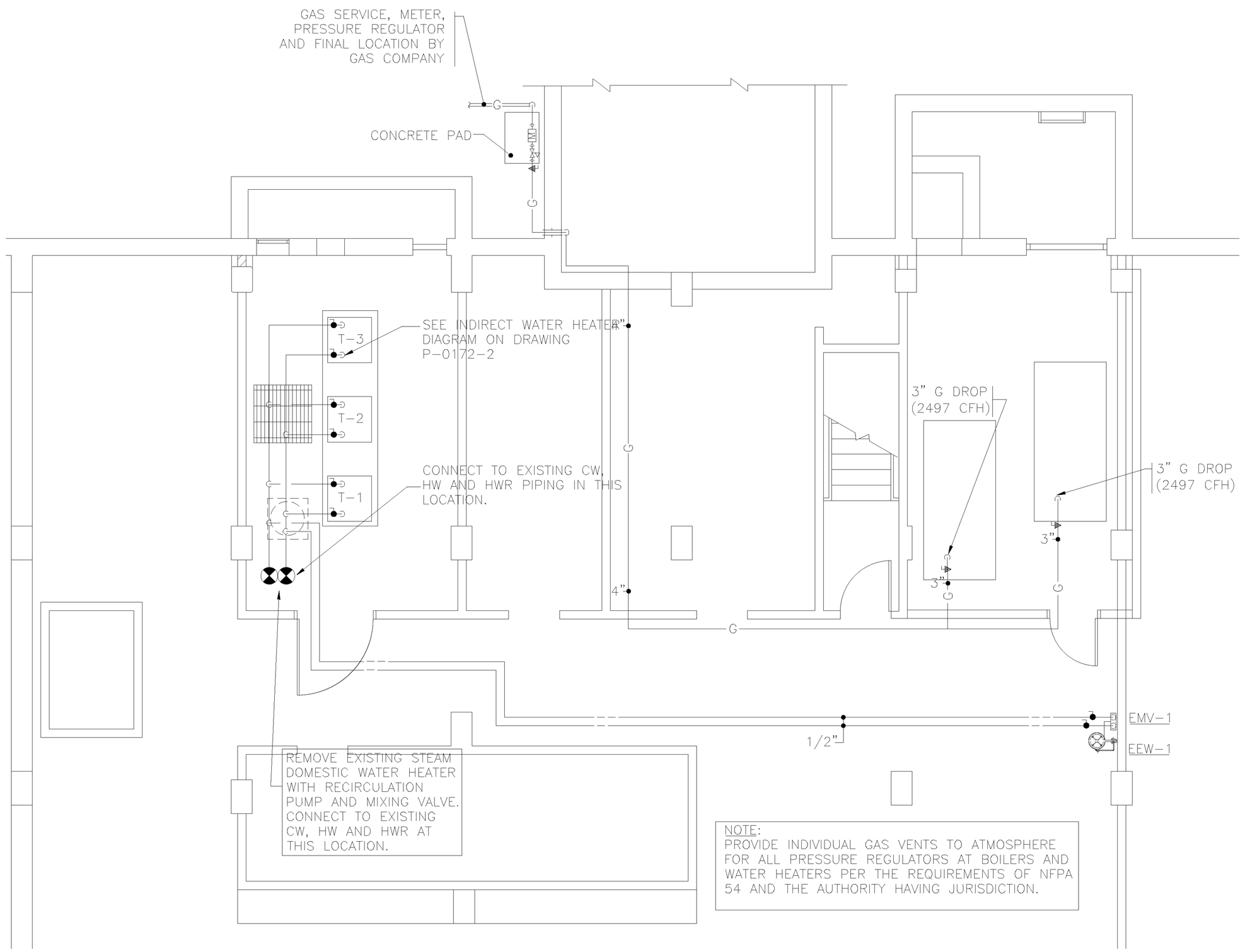

NOTE:
PROVIDE INDIVIDUAL GAS VENTS TO ATMOSPHERE FOR ALL PRESSURE REGULATORS AT BOILERS AND WATER HEATERS PER THE REQUIREMENTS OF NFPA 54 AND THE AUTHORITY HAVING JURISDICTION.

1 P-1 MECHANICAL ROOM PLUMBING PLAN
SCALE: 1/4" = 1'-0"

PLUMBING LEGEND

GENERAL

		CAP OR END OF PIPE
	CONT	CONTINUATION
	DN	ELBOW DOWN OR DROP
		ELBOW UP OR RISE
		FLOW DIRECTION
	GWH-#	GAS WATER HEATER
	NTS	NOT TO SCALE
		TEE LOOKING DOWN
		TEE LOOKING UP
	TYP	TYPICAL
		UNION

WATER

	CW	COLD WATER
	HW	HOT WATER
	HWR	HOT WATER RETURN
W	W	WATER SERVICE (BURIED)

VALVES

		BALL VALVE
		CHECK VALVE
		GATE VALVE
	TG	TEMPERATURE GAUGE
	T&P	TEMP. & PRESSURE RELIEF

* NOTE: NOT ALL SYMBOLS MAY BE APPLICABLE TO THIS PROJECT

INDIRECT WATER HEATER SCHEDULE

LABEL	TEMP. SETTING	RECOVERY RATE	RECOVERY DEG. RISE	GAS INPUT (CFH)	ELECTRIC	MANUFACTURER AND MODEL
T-1,2,3,	140°F	650 GPH EACH-1950 GPH TOTAL	50° - 140°F	-	-	WEIL McLAIN PLUS 120

* NOTE: THE EXISTING FIRE PROTECTION SPRINKLER SYSTEM CURRENTLY EXCEEDS THE REQUIREMENTS FOR BOILER ROOM COVERAGE (AREA/DENSITY). NO MODIFICATIONS WILL BE REQUIRED FOR THE EXISTING FIRE PROTECTION SPRINKLER SYSTEM.

PLUMBING FIXTURE SCHEDULE

LABEL	DESCRIPTION	FIXTURE	FITTING	REMARKS
EMV-1	EMERGENCY EYEWASH TEMPERING VALVE	AMOT	THERMOSTATIC MIXING VALVE	EXPOSED ON WALL TO SUPPLY TEMPERED WATER TO EMERGENCY EYEWASH FIXTURE.
EEW-1	EMERGENCY EYEWASH UNIT	GUARDIAN MODEL # G1760	GUARDIAN MODEL AP275-100	EMERGENCY EYE/FACEWASH UNIT COMPLETE WITH LIGHT, ALARM HORN, AND FLOW SWITCH ASSEMBLY.

GRAPHIC SCALE
1/4" = 1'-0"
0 2' 4' 8' 12'

N

AS BUILT | NAVSTA# 36016-352

REVISIONS

REV.	DATE	DESCRIPTION	BY

DESIGN/BUILDER: O. AHLBORG & SONS INC.
ADDRESS: 48 MOLTER ST, CRANSTON, RI 02910
DESIGNER OF RECORD FOR FINAL DESIGN:
MARQUIRE GROUP
33 COMMERCIAL ST, SUITE 1, FOXBOROUGH, MA 02035
DSGN: DJS DRWN: DJS CHK: IAP
SUPV: T. S. BRYDA, P.E.
SUBMITTED BY:
(SIGNED) (TITLE) (DATE)

ARCH. | CIV. STR. | MECH. | PRMGR. | ELEC.
SATISFACTORY TO | DATE
SATISFACTORY TO | DATE
SATISFACTORY TO | DATE
HEAD, ENGINEERING BRANCH | DATE

DEPARTMENT OF THE NAVY
NAVAL STATION
NAVAL FACILITIES ENGINEERING COMMAND
NEWPORT, R.I.

NAVAL STATION NEWPORT
DSM - DECENTRALIZATION
B.O.Q. BLDG. 172
PLUMBING PLAN

CODE I.D. NO.
DRAWING SIZE: 22x34
CONST. CONT. NO. N62470-97-D-5018 -JN14/08
SPEC.
NAVFAC DRAWING NO. 222 8058
SHEET OF
PW NO. P-0172-1

NOTES:

1. CW, HW AND HWR PIPE SIZES ARE ESTIMATED. CONTRACTOR SHALL FIELD VERIFY AND MATCH EXISTING PIPE SIZES.

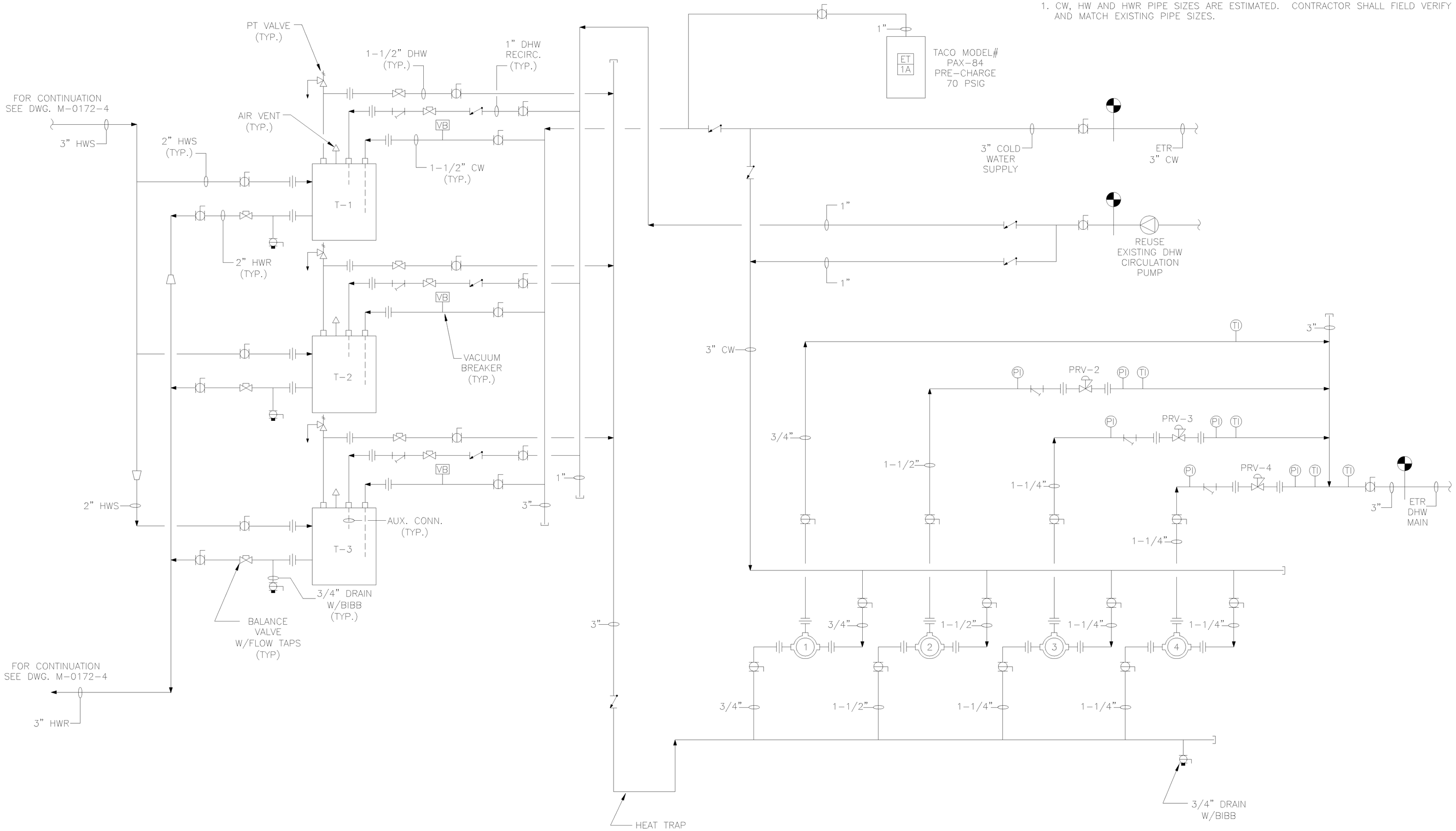

1 / P-2 INDIRECT WATER HEATER DIAGRAM
SCALE: NONE

AMOT VALVE ①	MODEL NO. 3/4 JOBT-120-01-RBM	
AMOT VALVE ②	MODEL NO. 1-1/2 CMBT-120-01	
AMOT VALVE ③	MODEL NO. 1-1/4 CCMCT-120-01	
AMOT VALVE ④	MODEL NO. 1-1/4 CCMCT-120-01	

PRV-2	SPENCE, 5-100 PSIG, 35 GPM 100 PSI SPRINGS REQUIRED.
PRV-3	SPENCE, 5-75 PSIG, 60 GPM
PRV-4	SPENCE, 5-75 PSIG, 60 GPM

NOTE: SET PRV'S @ 3 PSIG ± APART

AS BUILT | NAVSTA# 36017-352

REVISIONS

REV.	DATE	DESCRIPTION	BY

ARCH.	CIV. STR.	
MECH.	PRNDR.	
ELEC.		
SATISFACTORY TO	DATE	
SATISFACTORY TO	DATE	
SATISFACTORY TO	DATE	
HEAD, ENGINEERING BRANCH	DATE	

DESIGN/BUILDER: O. AHLBORG & SONS INC.
ADDRESS: 48 MOLTER ST, CRANSTON, RI 02910
DESIGNER OF RECORD FOR FINAL DESIGN:
MACQUIRE GROUP
33 COMMERCIAL ST, SUITE 1, FOXBOROUGH, MA 02035
ESCRI: DRWN: CHK:
SUPV: T. S. BRYDA, P.E.
SUBMITTED BY: (TITLE) (DATE)
(SIGNED)

DEPARTMENT OF THE NAVY
NAVAL STATION

NAVAL FACILITIES ENGINEERING COMMAND
NEWPORT, R.I.

NAVAL STATION NEWPORT
DSM - DECENTRALIZATION
B.O.Q. BLDG. 172
PLUMBING FLOW DIAGRAM

CODE I.D. NO.
DRAWING SIZE: 22x34
CONST. CONT. NO. N62470-97-D-5018 -JN14/08
SPEC.
NAVFAC DRAWING NO. 222 8059
SHEET OF
PW NO. P-0172-2