REPAIR ELECTRICAL ELEVATOR IN BACHELOR OFFICER'S QUARTERS BUILDING 172 CHI NAVAL COMPLEX NEWPORT, RHODE ISLAND

CONTRACT NO. N62472-01-C-6910

ENGINEERS

AEROSPACE SYSTEMS, INC. (ASI)
ENERGY SYSTEMS DIVISION
121 MIDDLESEX TURNPIKE
BURLINGTON, MA 01803

LIST OF DRAWINGS:

SHEET NO.	NAVFAC DRAWING NO.	NAVSTA DRAWING NO.	TITLE
1	2202-680	33969-332	TITLE SHEET
2	2202-681	33970-332	ELEVATOR DETAILS EL-1
3	2202-682	33971-332	ELECTRICAL BASEMENT AND FIRST FLOOR PLANS E-1
4	2202-683	33972-332	ELECTRICAL 2ND, 3RD, AND 4TH FLOORS AND ROOF PLANS E-2
5	2202-684	33973-332	ELECTRICAL DETAILS E-3
6	2202-685	33974-332	MECHANICAL PLANS M-1

SCHEDULING NOTES

1. WORK SHALL BE PERFORMED BETWEEN 1 OCTOBER AND 1 APRIL.
2. ELEVATOR SHALL NOT BE OUT OF SERVICE FOR LONGER THAN 90 DAYS.

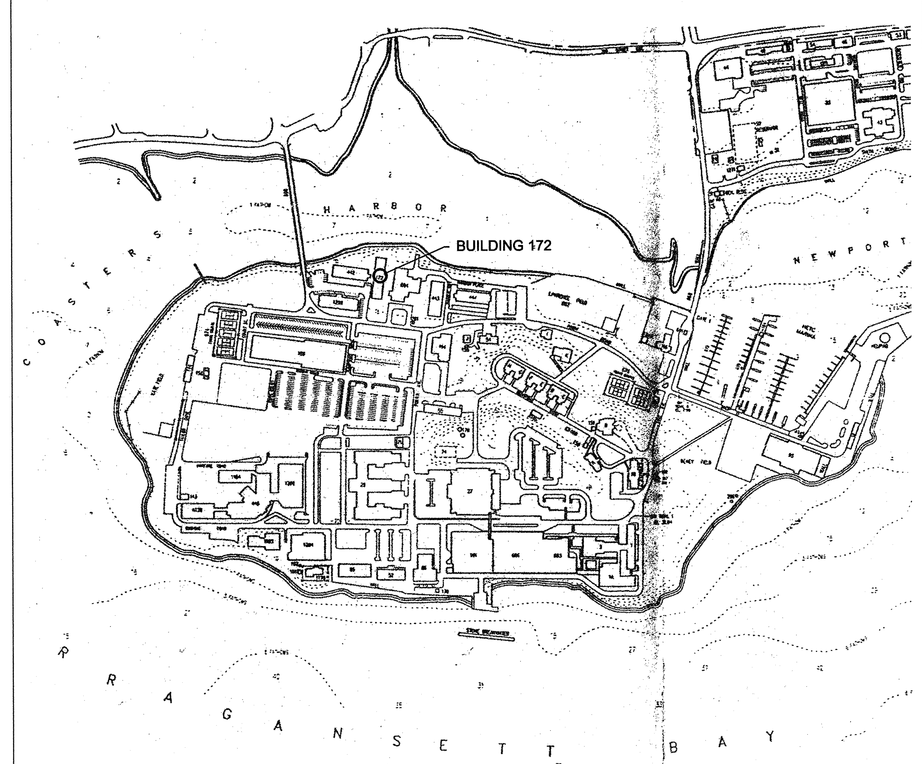

LOCATION MAP
N.T.S.

REVISION	DATE	DESCRIPTION	BY

NAVSTA DWG. NO. 33969-332
NETC SK. NO.
DSGN JS/JZ
DR. R.L.
BR. John Aspen PE 5/15/02
DIR.
APPROVED DATE
J.J. Galuska, RA 6/5/02
SATISFACTORY TO
Paul E. Buitro
DATE 5/7/02

DEPARTMENT OF THE NAVY — NAVAL FACILITIES ENGINEERING COMMAND
NAVAL STATION NEWPORT
NEWPORT, RHODE ISLAND

REPAIR ELECTRICAL ELEVATOR
IN BACHELOR OFFICER'S QUARTERS
BUILDING 172 CHI

TITLE SHEET

ASI AEROSPACE SYSTEMS, INC.
ENERGY SYSTEMS DIVISION
121 MIDDLESEX TURNPIKE, BURLINGTON, MA 01803
TELEPHONE (781)272-7517 FAX (781)272-7810

SIZE	CODE IDENT NO.	NAVFAC DRAWING NO.:
F	80091	2202-680
		CONSTR CONTR NO.: N62472-01-C-6910
SCALE: AS NOTED		SPEC. NO. 04-01-6910 SHEET 1

T-1

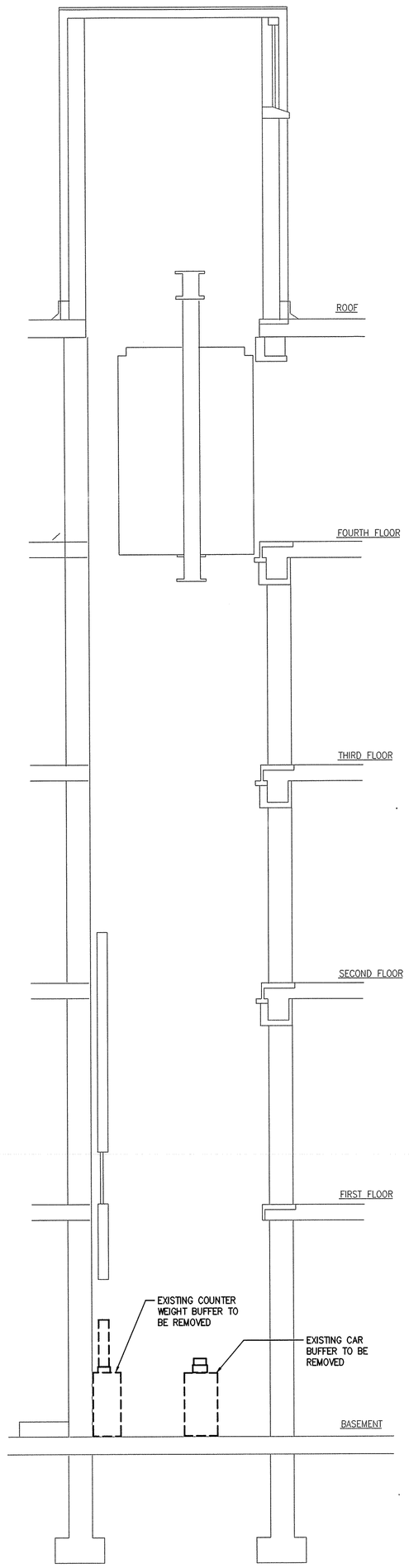

SECTION THRU SHAFT–DEMOLITION PLAN
SCALE: 1/4"=1'-0"

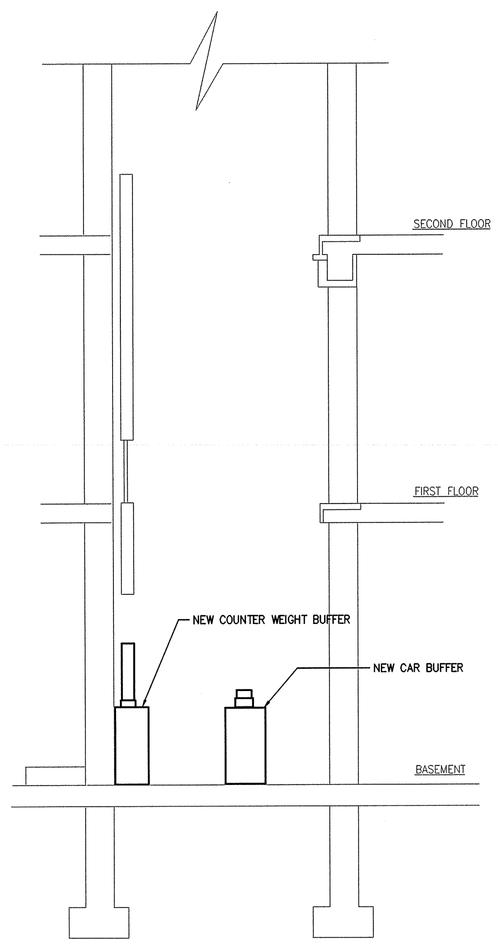

NEW PARTIAL SECTION THRU SHAFT
SCALE: 1/4"=1'-0"

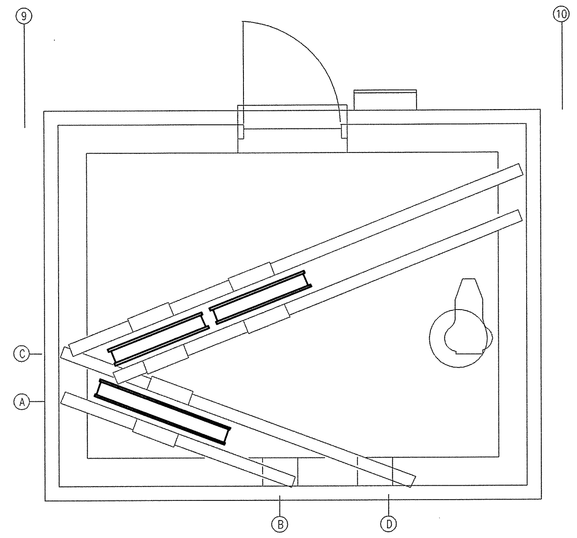

NOTE: PROVIDE NEW SHEAVES, SHAFTS, AND PILLOWBLOCKS.

NEW SHEAVE ROOM PLAN
SCALE: 1/2"=1'-0"

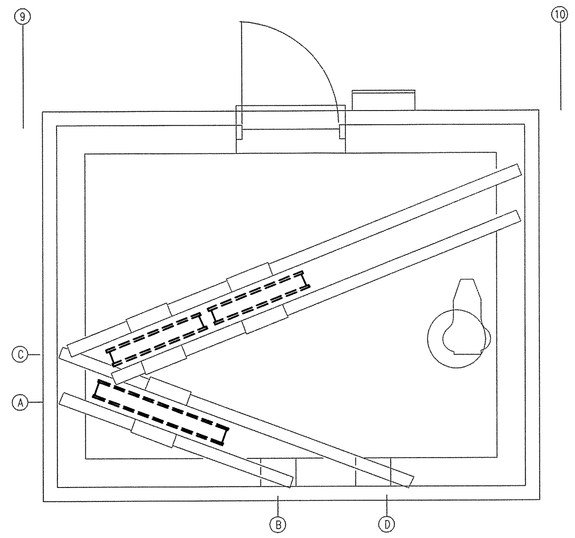

NOTE: EXISTING SHEAVES, SHAFTS, AND PILLOWBLOCKS TO BE REMOVED

SHEAVE ROOM DEMOLITION PLAN
SCALE: 1/2"=1'-0"

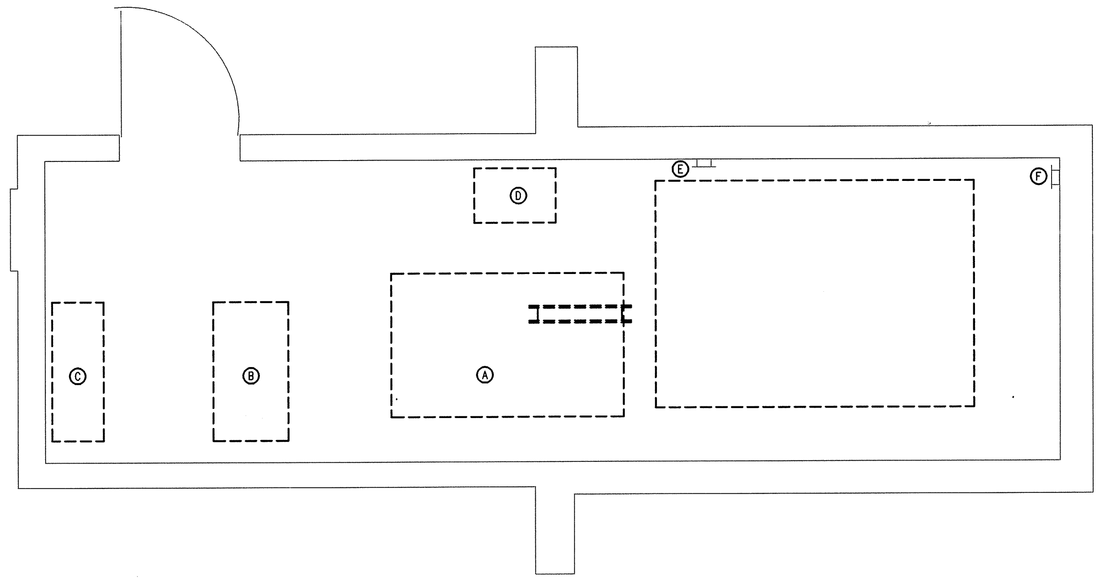

MACHINE ROOM AND PIT DEMOLITION PLAN
SCALE: 1/2"=1'-0"

KEY NOTES:

- (A) EXISTING MACHINE, MOTOR, AND BRAKE TO BE REMOVED
- (B) EXISTING CONTROLLER TO BE REMOVED
- (C) REMOVE EXISTING MOTOR GEN. SET
- (D) REMOVE EXISTING SELECTOR
- (E) EXISTING 3 FT. PIT LADDER TO REMAIN
- (F) EXISTING 8 FT. PIT LADDER TO REMAIN

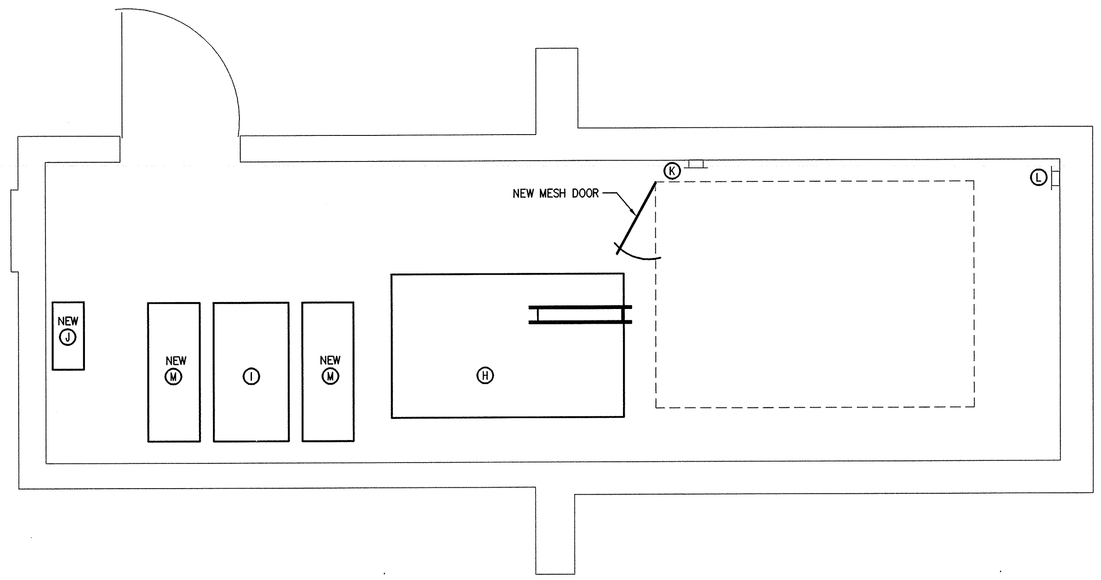

NEW MACHINE ROOM AND PIT
SCALE: 1/2"=1'-0"

KEY NOTES:

- (H) NEW MACHINE, MOTOR, AND BRAKE
- (I) NEW SOLID STATE ~~VFW~~ VF-VV CONTROL
- (J) NEW ISOLATION TRANSFORMER
- (K) EXISTING 3 FT. PIT LADDER TO REMAIN
- (L) EXISTING 8 FT. PIT LADDER TO REMAIN
- (M) NEW ANTI-STATIC FLOOR PAD

REVISION	DATE	DESCRIPTION	BY

COMMONWEALTH OF MASSACHUSETTS
JOHN ZVARA
No. 14406
REGISTERED PROFESSIONAL ENGINEER

NAVSTA DWG. NO. 33970-332
NETC SK. NO.
DSGN JS/JZ
DR. R.L.
BR. John J. Zvara, PE 5/15/02
DIR.
APPROVED DATE
J. Galuska, RA 6/5/02
SATISFACTORY TO
Paul F. Smith
DATE 5/7/02

DEPARTMENT OF THE NAVY — NAVAL FACILITIES ENGINEERING COMMAND
NAVAL STATION NEWPORT
NEWPORT, RHODE ISLAND

REPAIR ELECTRICAL ELEVATOR
IN BACHELOR OFFICER'S QUARTERS
BUILDING 172 CHI

ELEVATOR DETAILS EL-1

ASI AEROSPACE SYSTEMS, INC.
ENERGY SYSTEMS DIVISION
121 MIDDLESEX TURNPIKE, BURLINGTON, MA 01803
TELEPHONE (781)272-7517 FAX (781)272-7810

SIZE	CODE IDENT NO.	NAVFAC DRAWING NO.:
F	80091	2202-681
		CONSTR CONTR NO.: N62472-01-C-6910
SCALE: AS NOTED		SPEC. NO. 04-01-6910 SHEET 2

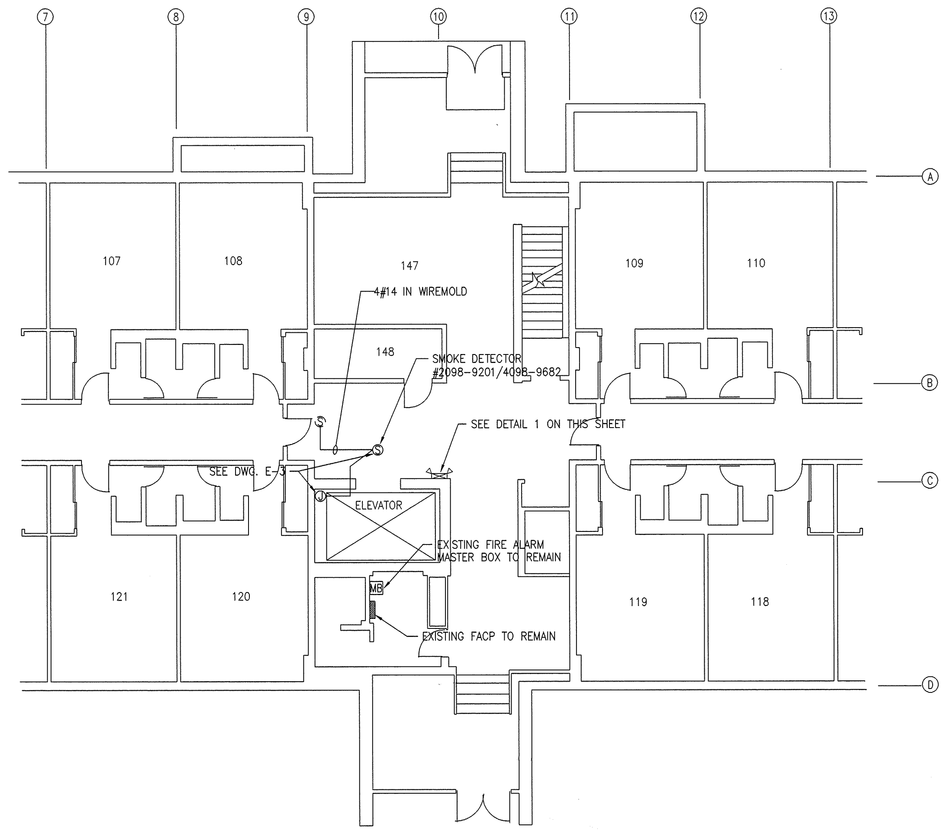

FIRST FLOOR PLAN

SCALE: 1/8"=1'-0"

SYMBOL LIST (LEGEND)

- CB — CIRCUIT BREAKER IN WALL MOUNTED NEMA 1 ENCLOSURE, TYPE AS NOTED, PROVIDE SHUNT-TRIP
- EXISTING PANEL TO REMAIN, ADD NEW CIRCUIT BREAKERS AS NOTED
- NEW WALL MOUNTED LIGHTING FIXTURE ROBERT WPG-1-120 WITH 100W A-21 LAMP
- JUNCTION BOX SIZE AS REQUIRED
- TTB — TELEPHONE TERMINAL BOARD
- GFI — GROUND FAULT INTERRUPTING 20A DUPLEX RECEPTACLE
- 20A SELF GROUNDING TYPE SPECIFICATION GRADE DUPLEX RECEPTACLE
- S — LIGHTING SWITCH
- S AC — SMOKE DETECTOR, PROVIDE WITH AUXILIARY CONTACTS AS NOTED (AC INDICATES WITH AUXILIARY CONTACTS)
- WIRE AND CONDUIT-3#12 AWG THHN IN 3/4" CONDUIT MINIMUM
- FACP — FIRE ALARM CONTROL PANEL
- MB — FIRE ALARM MASTER BOX
- 12 VOLT CHLORIDE #CR6-2-48W HALOGEN LAMPS. EMERGENCY LIGHTING FIXTURE
- ETR — EXISTING TO REMAIN

NOTES:

1. CONTRACTOR TO RELAMP EXISTING MACHINE ROOM 4 FOOT, 4 LAMP FLUORESCENT FIXTURE AND TWO INCANDESCENT PIT FIXTURES.
2. PROVIDE LAMINATED SIGN ON NEW MAIN SWITCH FEEDING ELEVATOR IN MACHINE ROOM.
3. COORDINATE ELECTRICAL WORK WITH MECHINICAL/ELEVATOR WORK. SEE MECHANICAL AND ELEVATOR DRAWINGS.

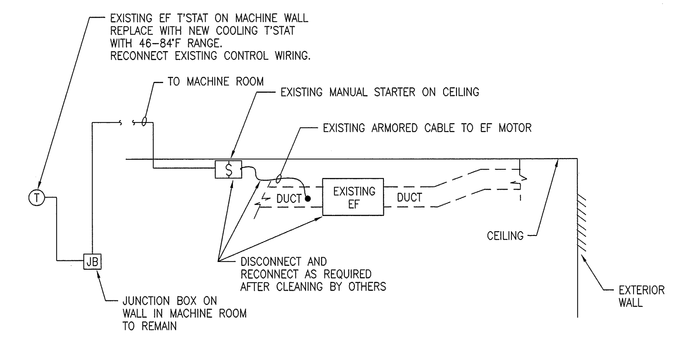

EXHAUST FAN DETAIL

N.T.S.

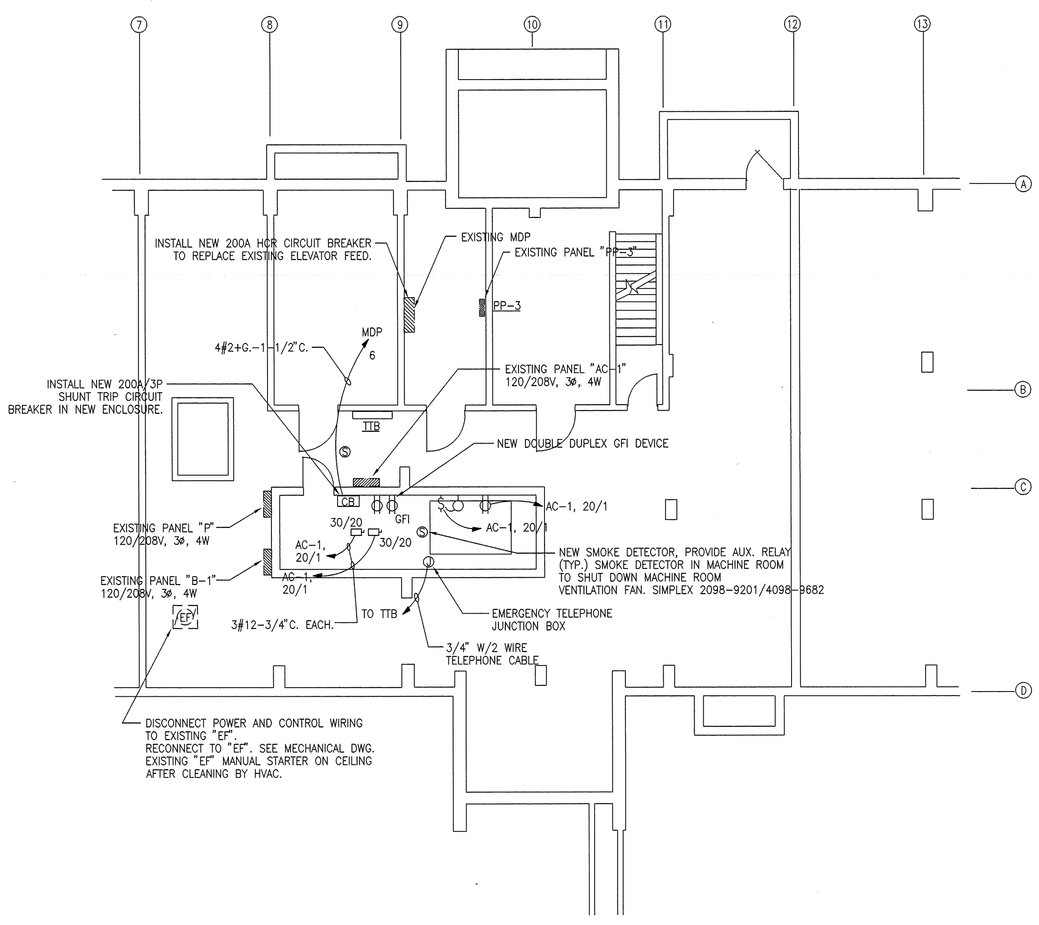

NEW BASEMENT PLAN

SCALE: 1/8"=1'-0"

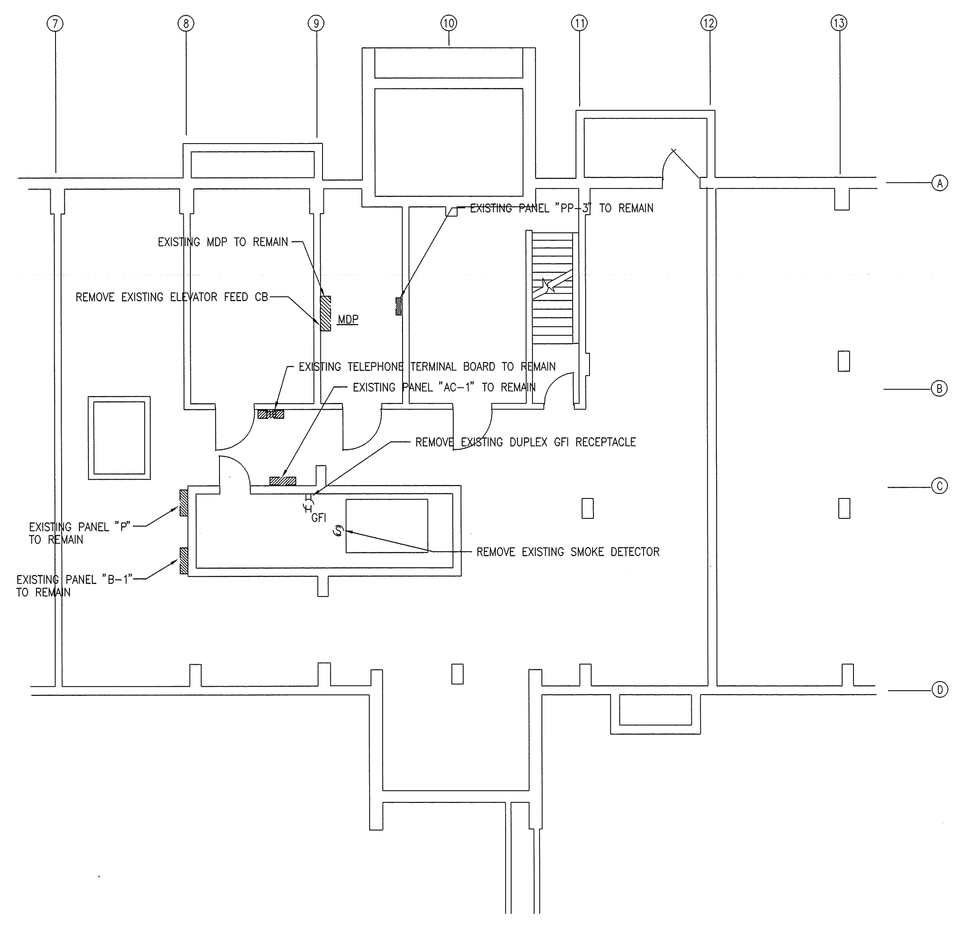

BASEMENT DEMOLITION PLAN

SCALE: 1/8"=1'-0"

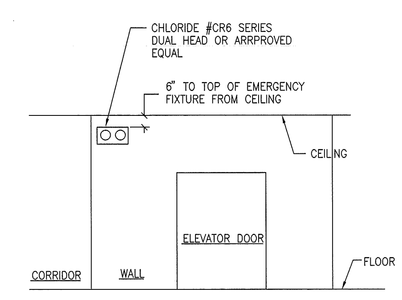

DETAIL 1

N.T.S.

REVISION	DATE	DESCRIPTION	BY

COMMONWEALTH OF MASSACHUSETTS — JOHN ZVARA No. 14406 — PROFESSIONAL ENGINEER

NAVSTA DWG. NO. 33971-332
NETC SK. NO.
DSGN JS/JZ
DR. R.L.
BR. John Zvara 5/15/02
DIR.
APPROVED DATE
D.Stabuska, RA 6/5/02

DEPARTMENT OF THE NAVY — NAVAL FACILITIES ENGINEERING COMMAND

NAVAL STATION NEWPORT
NEWPORT, RHODE ISLAND

REPAIR ELECTRICAL ELEVATOR
IN BACHELOR OFFICER'S QUARTERS
BUILDING 172 CHI

ELECTRICAL BASEMENT AND
FIRST FLOOR PLANS E-1

ASI — AEROSPACE SYSTEMS, INC. ENERGY SYSTEMS DIVISION, 131 MIDDLESEX TURNPIKE, BURLINGTON, MA 01803, TELEPHONE (781)272-7517, FAX (781)272-7810

SATISFACTORY TO: Paul R. Santos
DATE 5/16/02

SIZE	CODE IDENT NO.	NAVFAC DRAWING NO.: 2202-682
F	80091	CONSTR CONTR NO.: N62472-01-C-6910
SCALE: AS NOTED		SPEC. NO. 04-01-6910 SHEET 3

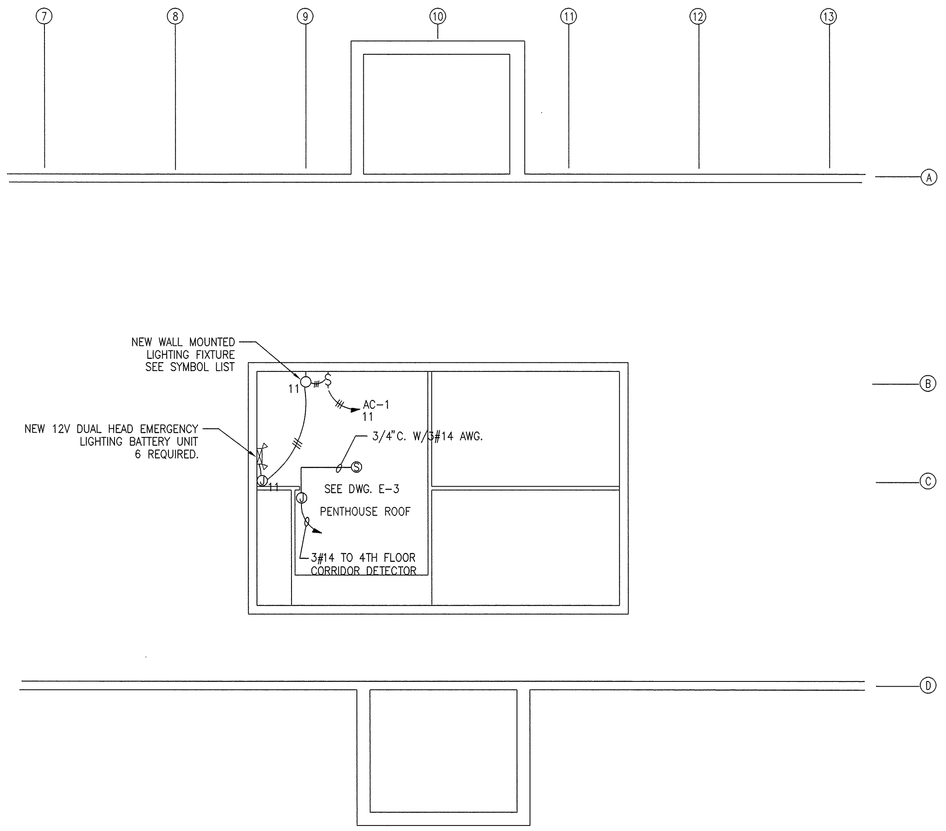

ROOF PLAN
SCALE: 1/8"=1'-0"

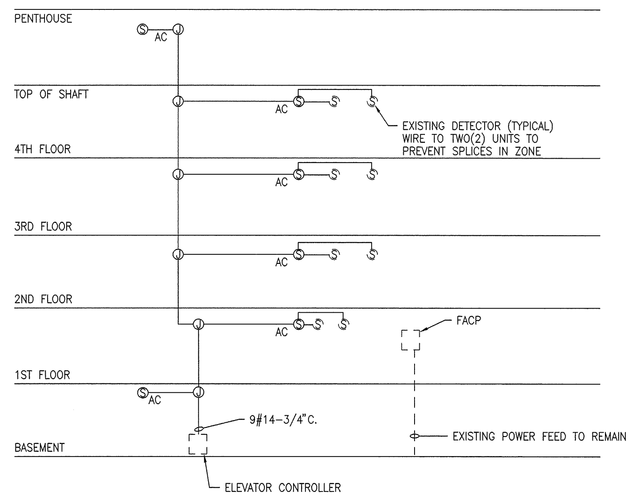

NOTE: SEE DRAWINGS FOR WIRE COUNTS AND ROUTING. SEE E-3 SECTION THROUGH SHAFT FOR WIRING DETAIL.

FIRE ALARM PARTIAL RISER
N.T.S.

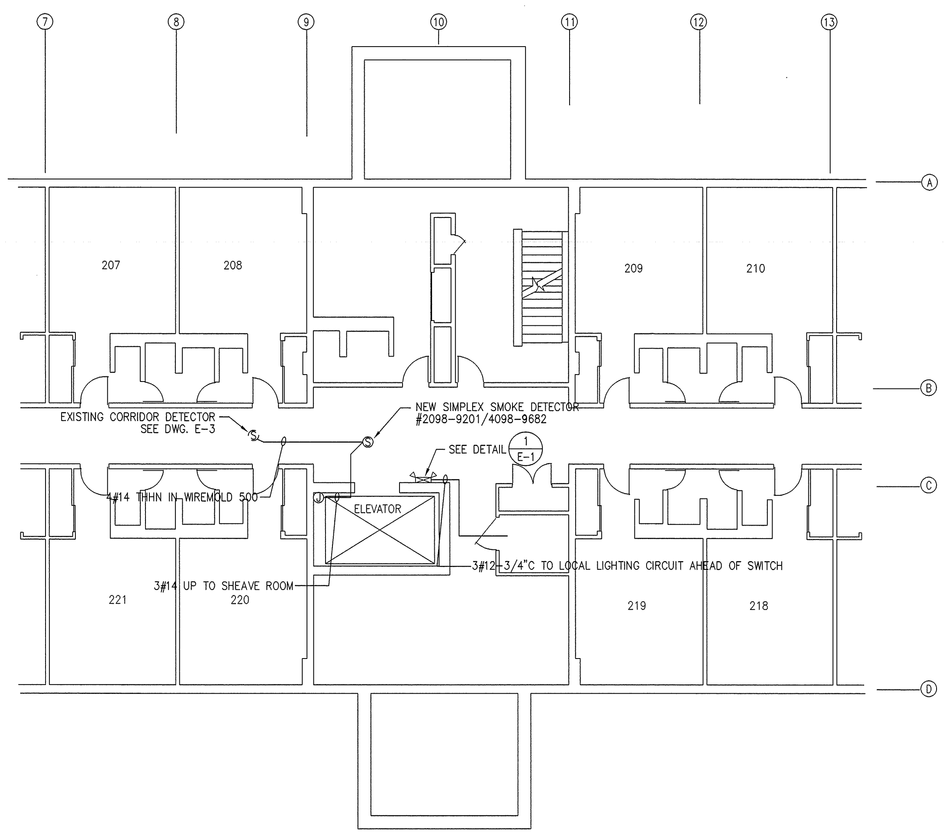

2ND, 3RD, AND 4TH FLOOR PLAN
SCALE: 1/8"=1'-0"
(APPLIES TO WORK REQUIRED ON 3 FLOORS)

SMOKE DETECTOR NUMBER	LANDING ON ACTIVATION	FIREFIGHTER SERVICE LIGHT
1	SECOND	FLASHING
2	SECOND	NON-FLASHING
3	FIRST	NON-FLASHING
4	FIRST	NON-FLASHING
5	FIRST	NON-FLASHING
6	FIRST	FLASHING

ELEVATOR RECALL SCHEDULE
N.T.S.

REVISION	DATE	DESCRIPTION	BY

NAVSTA DWG. NO. 33972-332
NETC SK. NO.
DSGN JS/JZ
DR. R.L.
BR. [signature] PE 5/15/02
DIR.
APPROVED DATE
[signature] RA 6/5/02

DEPARTMENT OF THE NAVY — NAVAL FACILITIES ENGINEERING COMMAND
NAVAL STATION NEWPORT
NEWPORT, RHODE ISLAND

REPAIR ELECTRICAL ELEVATOR
IN BACHELOR OFFICER'S QUARTERS
BUILDING 172 CHI

ELECTRICAL 2ND, 3RD, AND 4TH FLOOR
AND ROOF PLANS E-2

ASI AEROSPACE SYSTEMS, INC.
ENERGY SYSTEMS DIVISION
121 MIDDLESEX TURNPIKE, BURLINGTON, MA 01803
TELEPHONE (781)272-7517 FAX (781)272-7810

SATISFACTORY TO [signature]
DATE 5/1/02

SIZE F | CODE IDENT NO. 80091 | NAVFAC DRAWING NO.: 2202-683
CONSTR CONTR NO.: N62472-01-C-6910
SCALE: AS NOTED | SPEC. NO. 04-01-6910 | SHEET 4

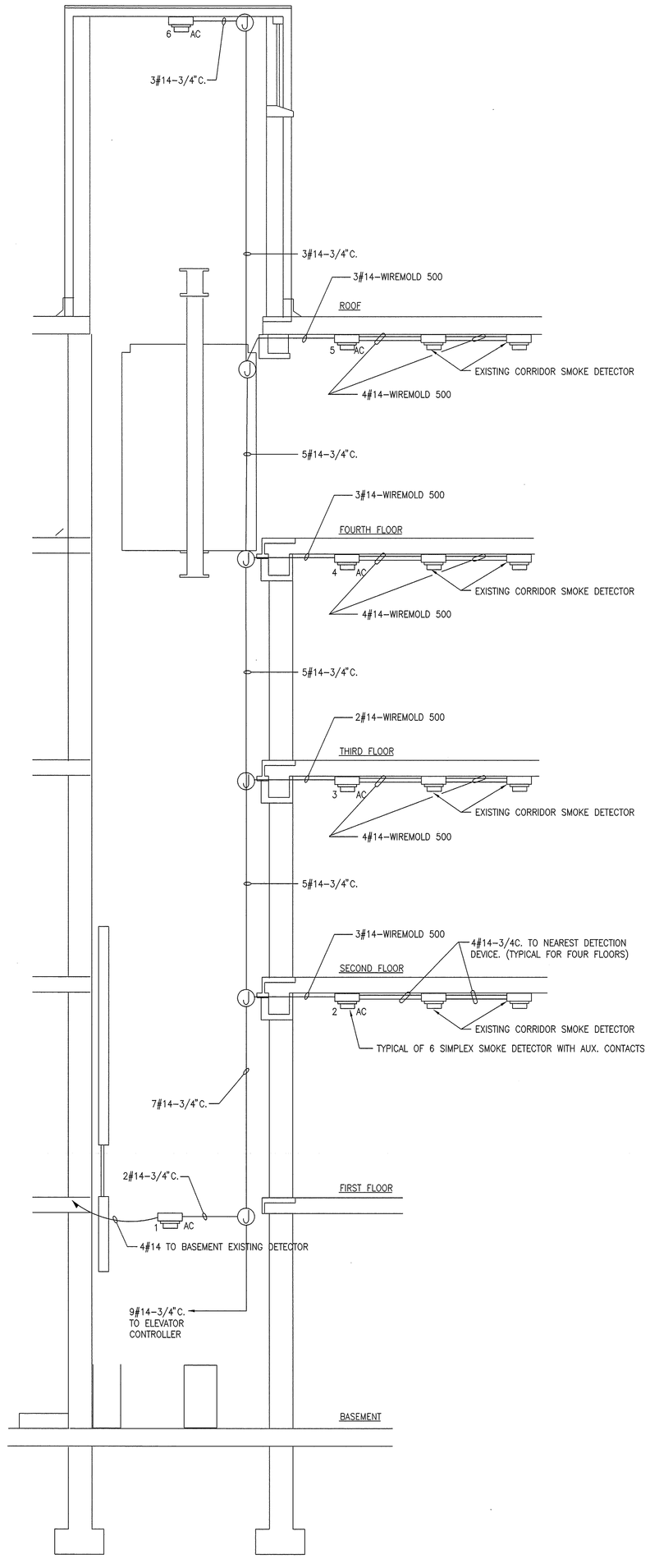

SECTION THRU SHAFT

SCALE: 1/4"=1'-0"

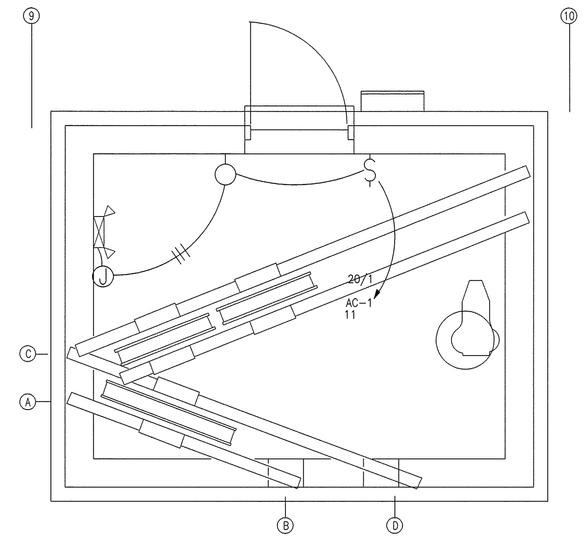

SHEAVE ROOM PLAN

SCALE: 1/2"=1'-0"

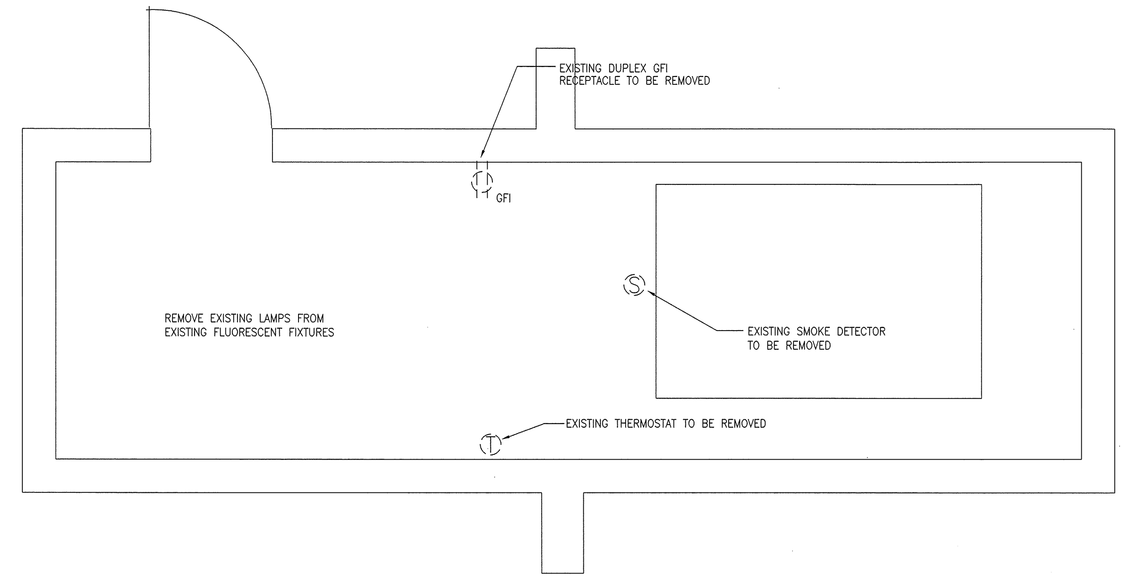

BASEMENT DEMOLITION PLAN

SCALE: 1/2"=1'-0"

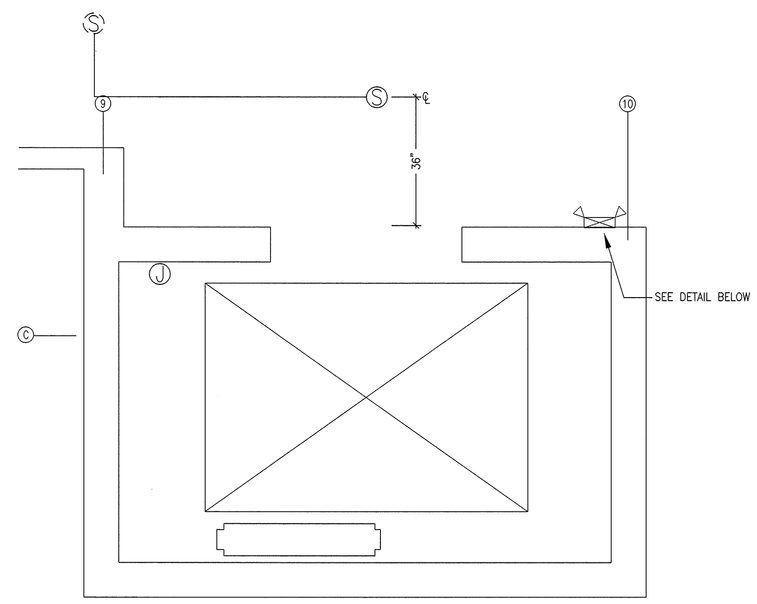

TYPICAL FLOOR PLAN

SCALE: 1/2"=1'-0"

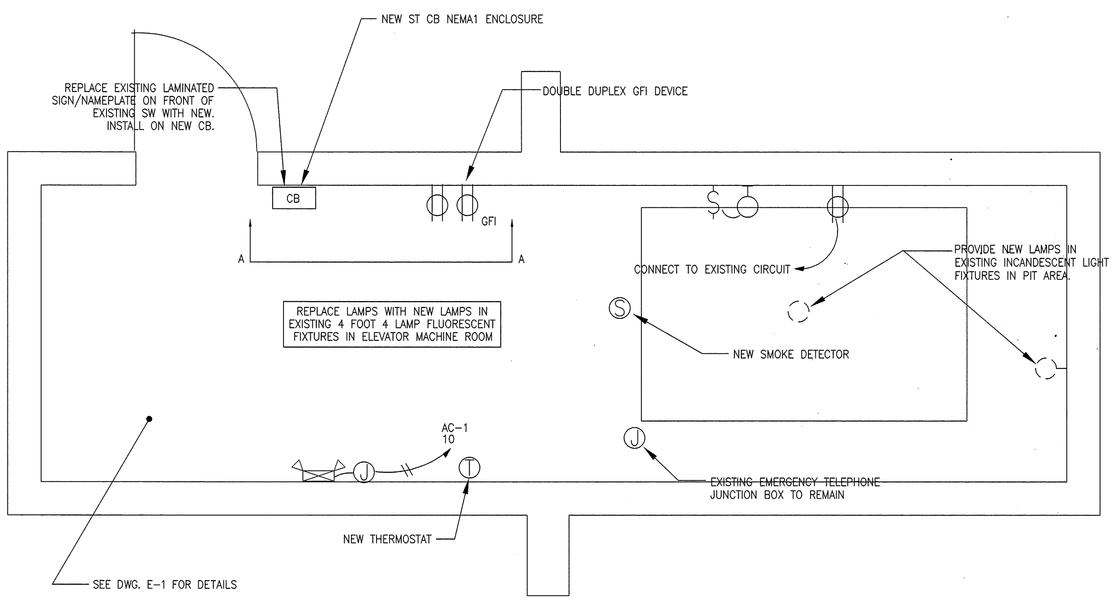

NEW BASEMENT PLAN

SCALE: 1/2"=1'-0"

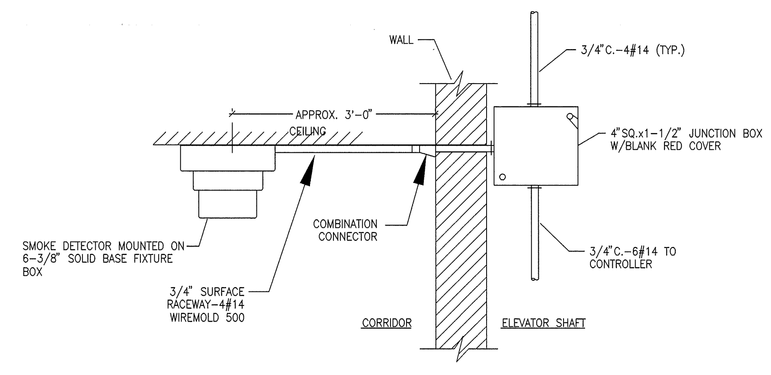

SMOKE DETECTOR DETAIL

N.T.S.

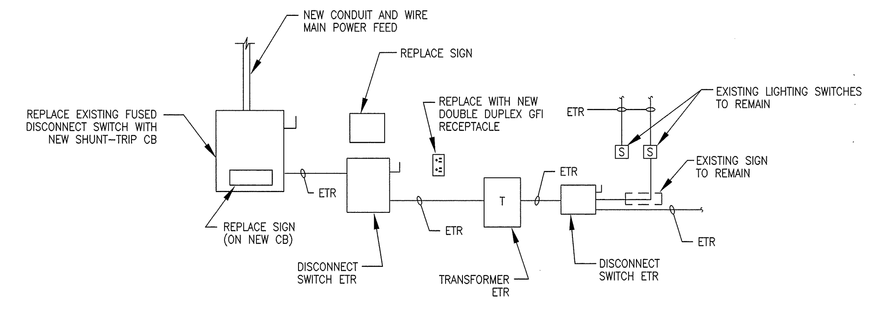

ELEVATOR MACHINE ROOM-WALL ELEVATION "A-A"

N.T.S.

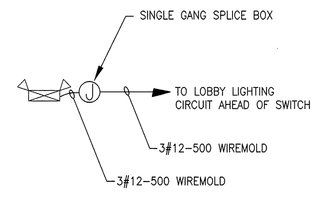

EMERGENCY LIGHTING POWER DETAIL

N.T.S.

REVISION	DATE	DESCRIPTION	BY

NAVSTA DWG. NO. 33973-332
NETC SK. NO.
DSGN JS/JZ
DR. R.L.
BR.
DIR.
APPROVED DATE

DEPARTMENT OF THE NAVY — NAVAL FACILITIES ENGINEERING COMMAND
NAVAL STATION NEWPORT
NEWPORT, RHODE ISLAND

REPAIR ELECTRICAL ELEVATOR
IN BACHELOR OFFICER'S QUARTERS
BUILDING 172 CHI

ELECTRICAL DETAILS E-3

ASI AEROSPACE SYSTEMS, INC.
ENERGY SYSTEMS DIVISION
121 MIDDLESEX TURNPIKE, BURLINGTON, MA 01803
TELEPHONE (781)272-7517 FAX (781)272-7810

SATISFACTORY TO
DATE

SIZE	CODE IDENT NO.	NAVFAC DRAWING NO.:
F	80091	2202-684
		CONSTR CONTR NO.: N62472-01-C-6910
SCALE: AS NOTED		SPEC. NO. 04-01-6910 SHEET 5

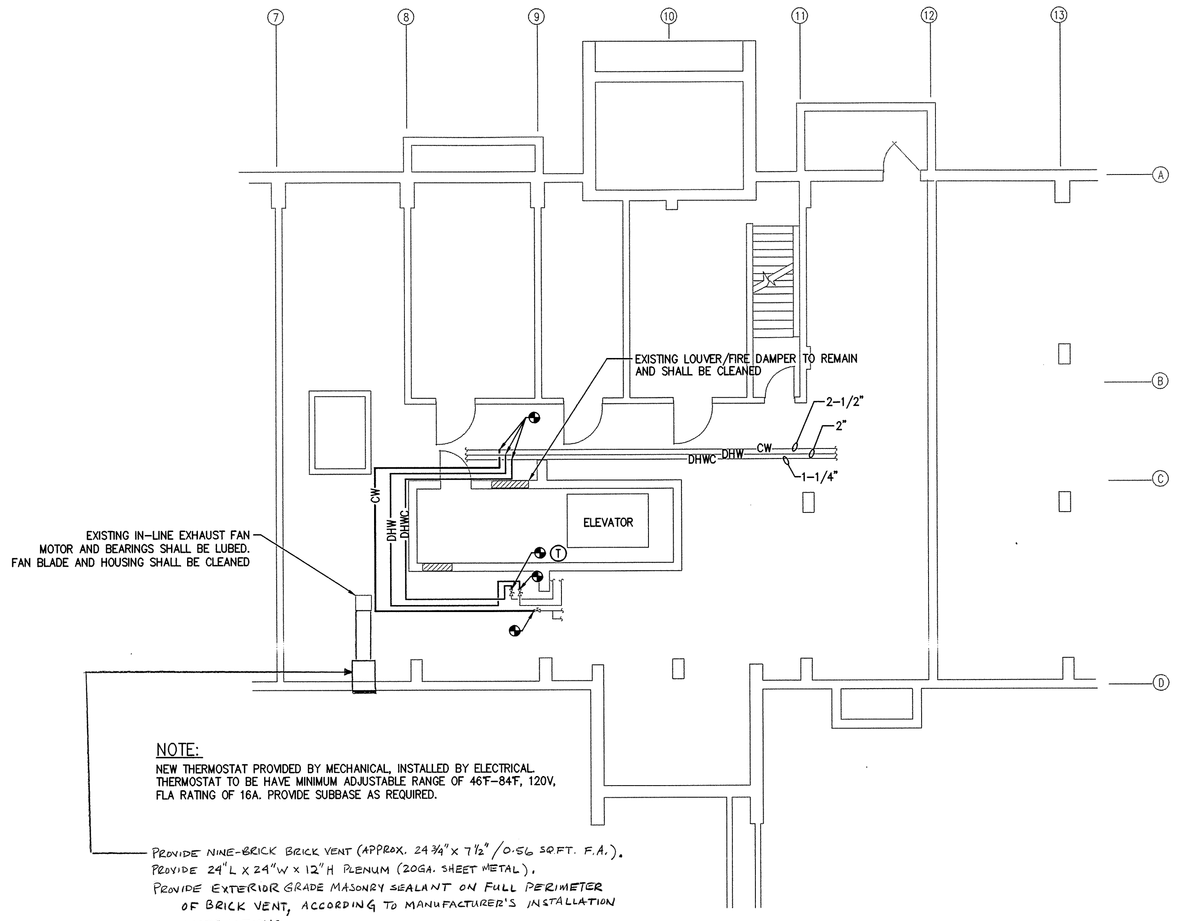

NOTE:
NEW THERMOSTAT PROVIDED BY MECHANICAL, INSTALLED BY ELECTRICAL. THERMOSTAT TO BE HAVE MINIMUM ADJUSTABLE RANGE OF 46°F–84°F, 120V, FLA RATING OF 16A. PROVIDE SUBBASE AS REQUIRED.

PROVIDE NINE-BRICK BRICK VENT (APPROX. 24 3/4" x 7 1/2" / 0.56 SQ.FT. F.A.).
PROVIDE 24"L x 24"W x 12"H PLENUM (20GA. SHEET METAL).
PROVIDE EXTERIOR GRADE MASONRY SEALANT ON FULL PERIMETER OF BRICK VENT, ACCORDING TO MANUFACTURER'S INSTALLATION INSTRUCTIONS.
PROVIDE RE-CLOSABLE ACCESS PANEL IN BOTTOM OF NEW PLENUM.

NEW BASEMENT PLAN
SCALE: 1/8"=1'-0"

LEGEND:

CW	COLD WATER LINE
DHW	DOMESTIC HOT WATER LINE
DHWC	DOMESTIC HOT WATER CIRCULATING LINE
	TO BE REMOVED
	NEW LINES
	FIRE DAMPER
	POINT OF CONNECTION/DISCONNECTION
	BALL VALVE
T	THERMOSTAT

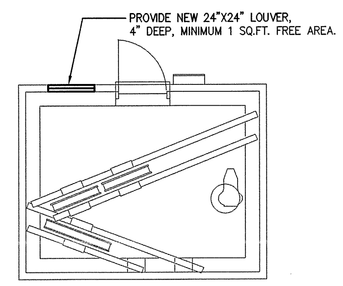

SHEAVE ROOM PLAN
SCALE: 1/4"=1'-0"

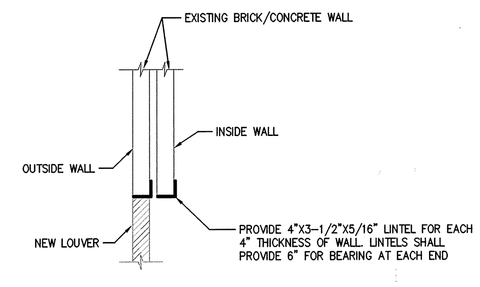

LOUVER OPENING
N.T.S.

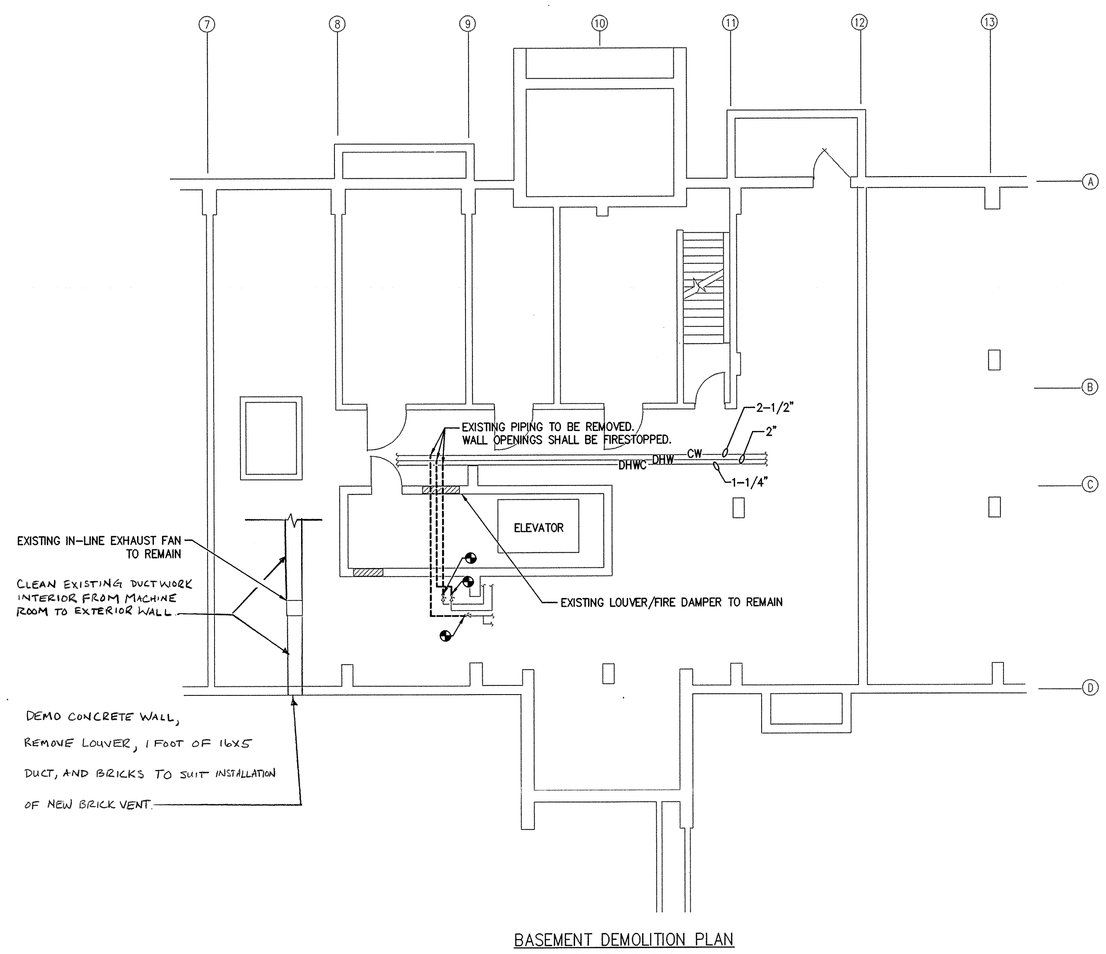

BASEMENT DEMOLITION PLAN
SCALE: 1/8"=1'-0"

REVISION	DATE	DESCRIPTION	BY
A	8/02	REPAIRS TO EXHAUST FAN.	RLC

COMMONWEALTH OF MASSACHUSETTS
JOHN ZVIAN
REGISTERED PROFESSIONAL ENGINEER

NAVSTA DWG. NO. 33974-332
NETC SK. NO.
DSGN JS/JZ
DR. R.L.
BR. 5/15/02 PE
DIR.
APPROVED DATE
J Galuska, RA 6/5/02

DEPARTMENT OF THE NAVY — NAVAL FACILITIES ENGINEERING COMMAND
NAVAL STATION NEWPORT
NEWPORT, RHODE ISLAND

REPAIR ELECTRICAL ELEVATOR
IN BACHELOR OFFICER'S QUARTERS
BUILDING 172 CHI

MECHANICAL PLANS M-1

ASI AEROSPACE SYSTEMS, INC.
ENERGY SYSTEMS DIVISION
121 MIDDLESEX TURNPIKE, BURLINGTON, MA 01803
TELEPHONE (781)272-7517 FAX (781)272-7810

SATISFACTORY TO
Paul F. Bailey
DATE 5/7/02

SIZE	CODE IDENT NO.	NAVFAC DRAWING NO.:
F	80091	2202-685
		CONSTR CONTR NO.: N62472-01-C-6910
SCALE: AS NOTED		SPEC. NO. 04-01-6910 SHEET 6

M-1