REVISION				
SYM	ZONE	DESCRIPTION	DATE	APPROVED
		AS BUILT 9-25-87 NO CHANGE	5-6-98	MD

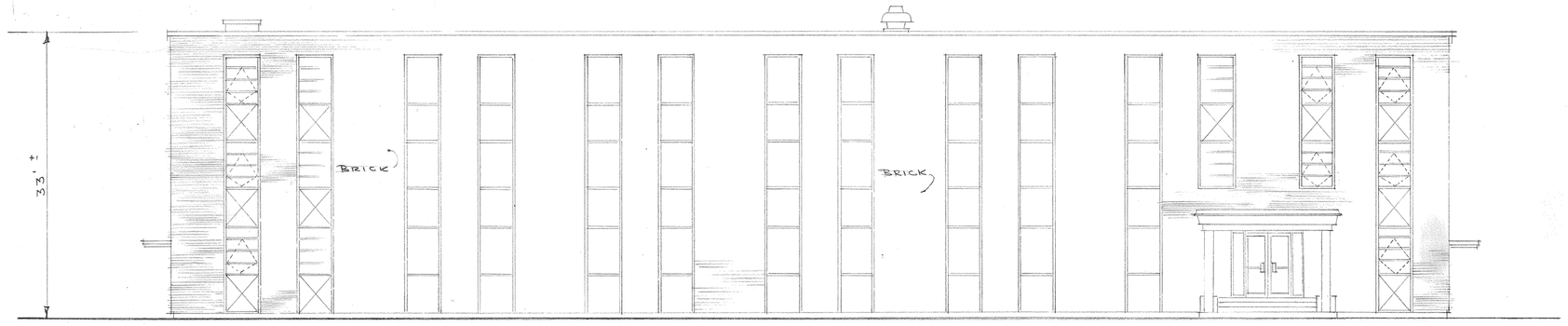

WEST ELEVATION BLDG. No. 441

SCALE 1/8"=1'-0"

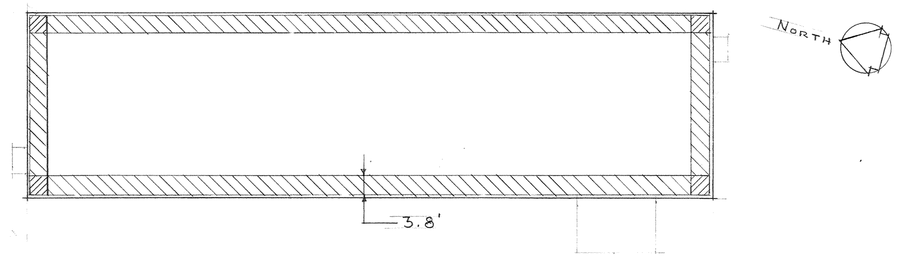

BLDG. No. 441 WIND LOAD ROOF PLAN

SCALE 1/16"=1'-0"

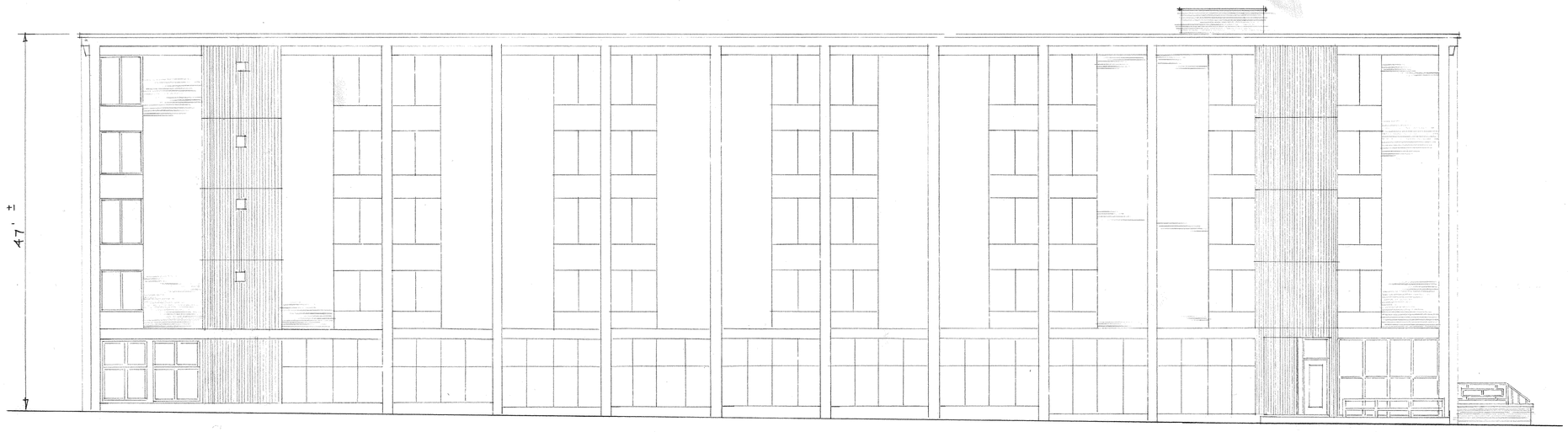

EAST ELEVATION BLDG. No. 678

SCALE 1/8"=1'-0"

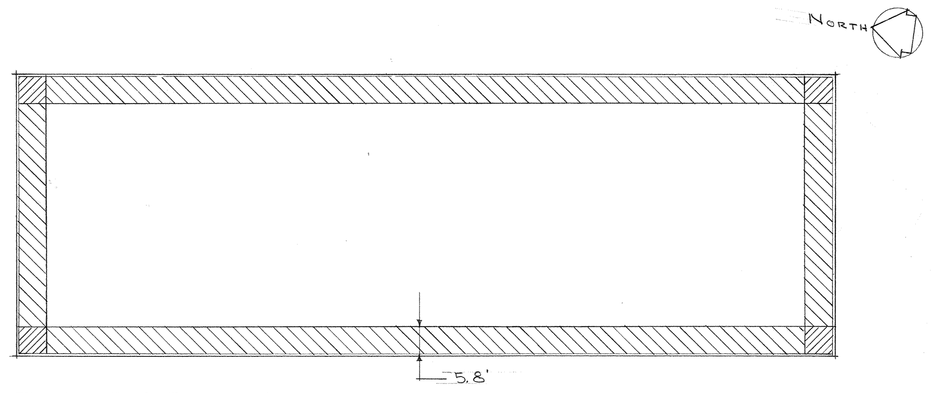

BLDG. No. 678 WIND LOAD ROOF PLAN

SCALE 1/16"=1'-0"

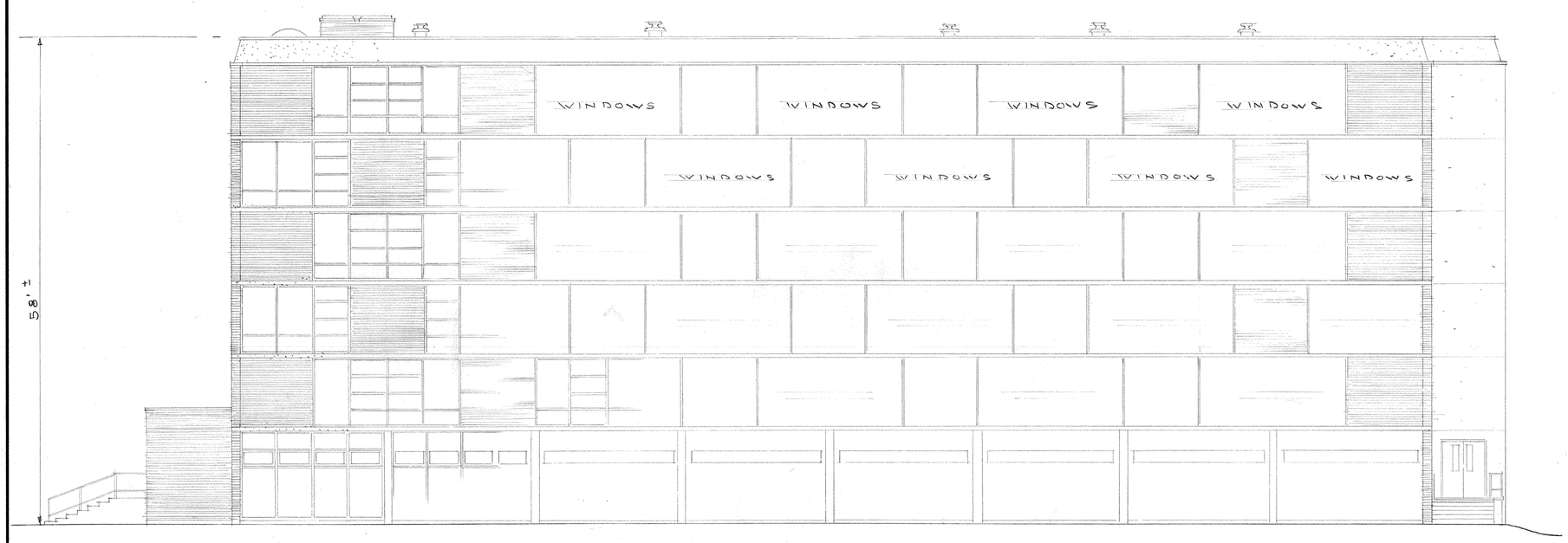

WEST ELEVATION BLDG No. 444

SCALE 1/8"=1'-0"

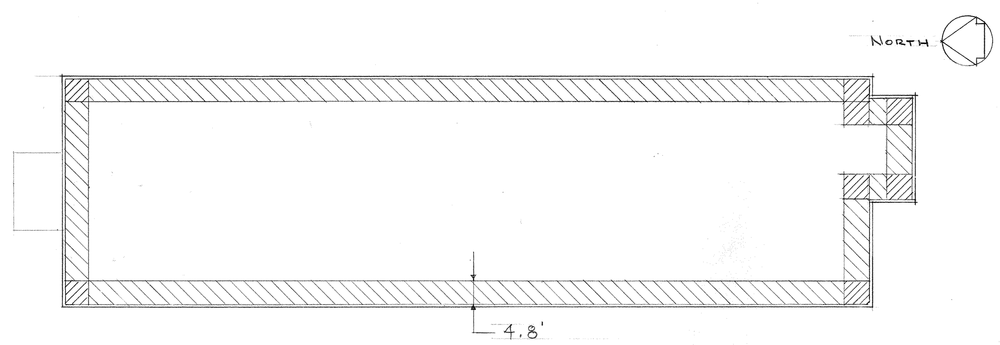

BLDG. No. 444 WIND LOAD ROOF PLAN

SCALE 1/16"=1'-0"

WIND LOAD LEGEND

- ROOF CORNERS 200 LB/SQ.FT.
- ROOF PERIMETER STRIP 96 LB/SQ FT
- ROOF BODY 60 LB./SQ.FT.

GRAPHIC SCALES

1/16"=1'-0" 10' 0' 10' 20' 30' 40' 50' 60' 70' 80'

1/8"=1'-0" 5' 0' 5' 10' 15' 20' 25' 30' 35' 40'

OLIVER C. JOHNSON No. 852 REGISTERED ARCHITECT

McLEISH & JOHNSON, ARCH.
655 MAIN ST. E. GREENWICH
RHODE ISLAND
DWN. JT DATE 2-25-86
PARTNER Michael C. McLeish

NETC DWG. NO. 25686-253
NETC SK. NO.
DSGN
DR.
BR. SWCHERN 2/27/86
DIR. J. Johnson JE 3/3/86
APPROVED D R Shurtleff DATE 3/6/86

SATISFACTORY TO
DATE

DEPARTMENT OF THE NAVY — NAVAL FACILITIES ENGINEERING COMMAND

NAVAL EDUCATION AND TRAINING CENTER
NEWPORT, RHODE ISLAND

ROOF REPLACEMENT FOR BUILDINGS No. 441, No. 444 & No. 678

BUILDING ELEVATIONS AND WIND LOAD ROOF PLANS

SIZE	CODE IDENT NO.	NAVFAC DRAWING NO.	
F	80091	2098083	A5
SCALE: AS SHOWN		CONSTR. CONTR. NO. N62472-86-C-1643	
		SPEC. 04-86-1643	SHEET 5 OF 5