REVISION				
SYM	ZONE	DESCRIPTION	DATE	APPROVED

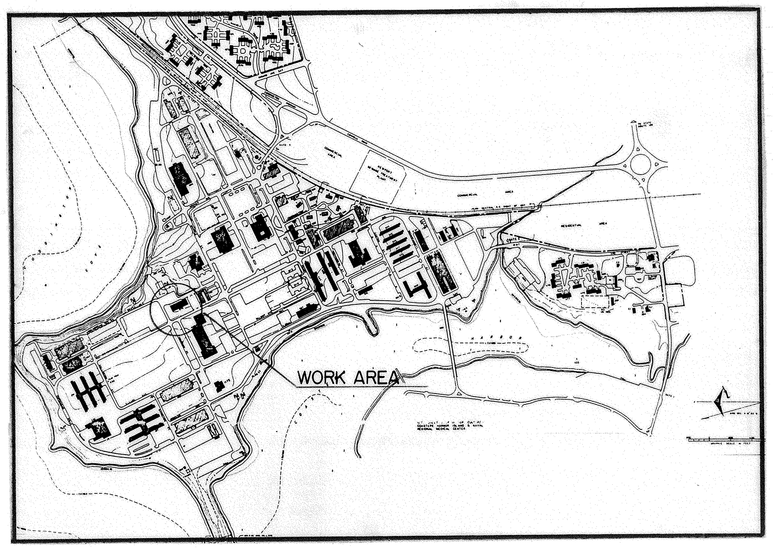

LOCATION MAP

REMOVALS AT BUILDING 678

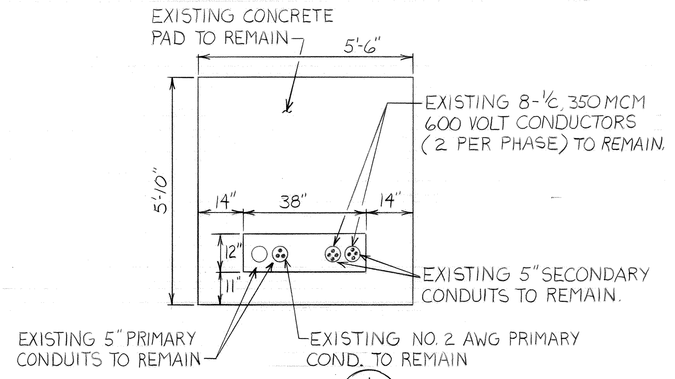

DETAIL 1/2 2

SCALE: 1/2"= 1'-0"

NOTES:

1. EXISTING TRANSFORMER INFORMATION:
   MANUFACTURER: WESTINGHOUSE
   PAD MOUNTED TRANSFORMER T94 P
   PHASE: 3Ø
   SIZE: 225 KVA
   VOLTAGE: 2400-120/208 VOLT
   STYLE: P4328H225C-1
   S.N.: 70PD949
   TOTAL WEIGHT: 4500 LBS.
   CAPACITY: 155 GALLON OIL
2. THE CONTRACTOR SHALL LOCATE NEW PADMOUNT TRANSFORMER ON EXISTING CONCRETE PAD. OVERALL DIMENSIONS OF NEW PAD MOUNT TRANSFORMER SHALL NOT EXCEED 4'-10" (FRONT) BY 5'-2" (SIDE). THE NEW TRANSFORMER SHALL ACCOMMODATE EXISTING TRANSFORMER PAD OPENINGS.

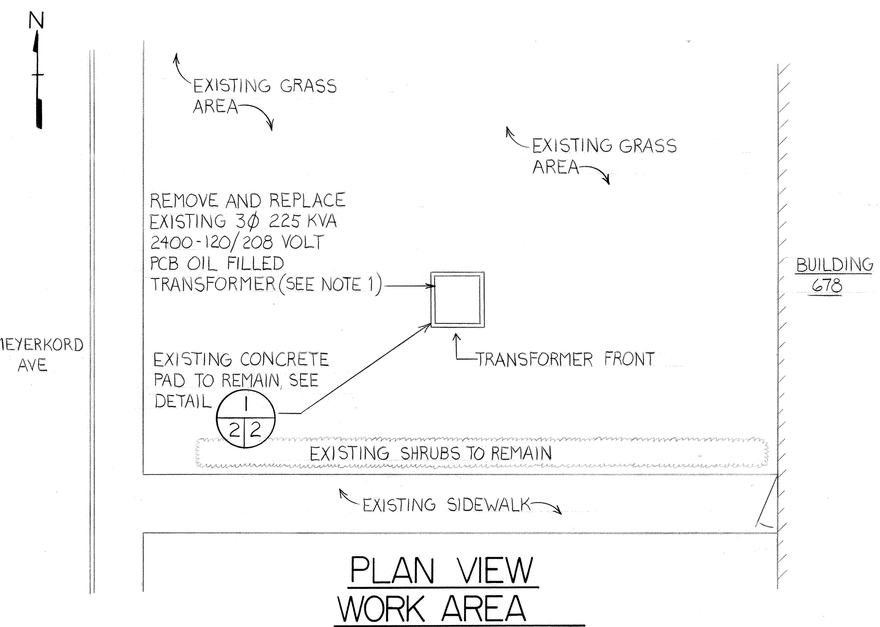

PLAN VIEW WORK AREA (BUILDING 678)

SCALE: 1/8"=1'-0"

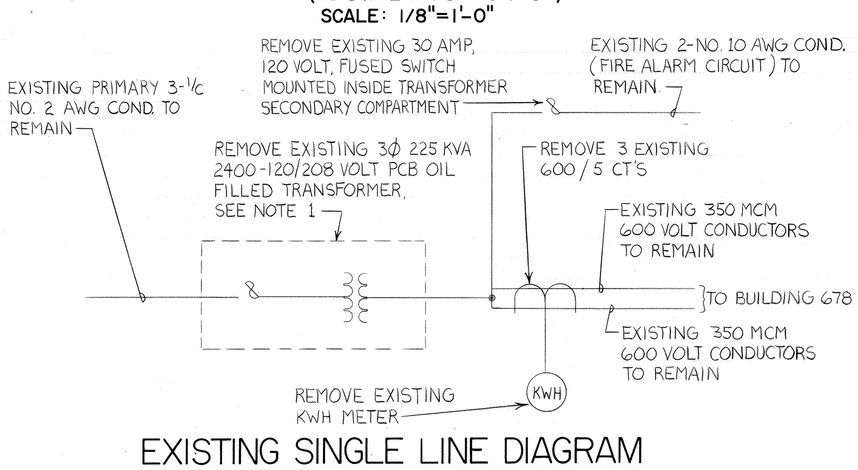

EXISTING SINGLE LINE DIAGRAM

NO SCALE

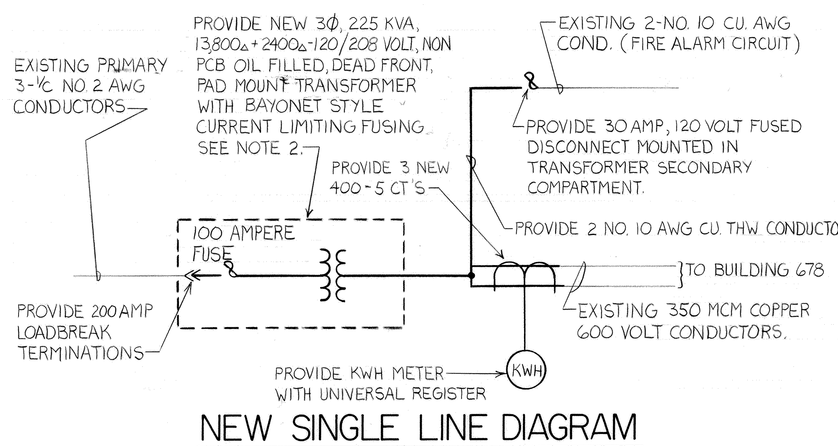

NEW SINGLE LINE DIAGRAM

NO SCALE

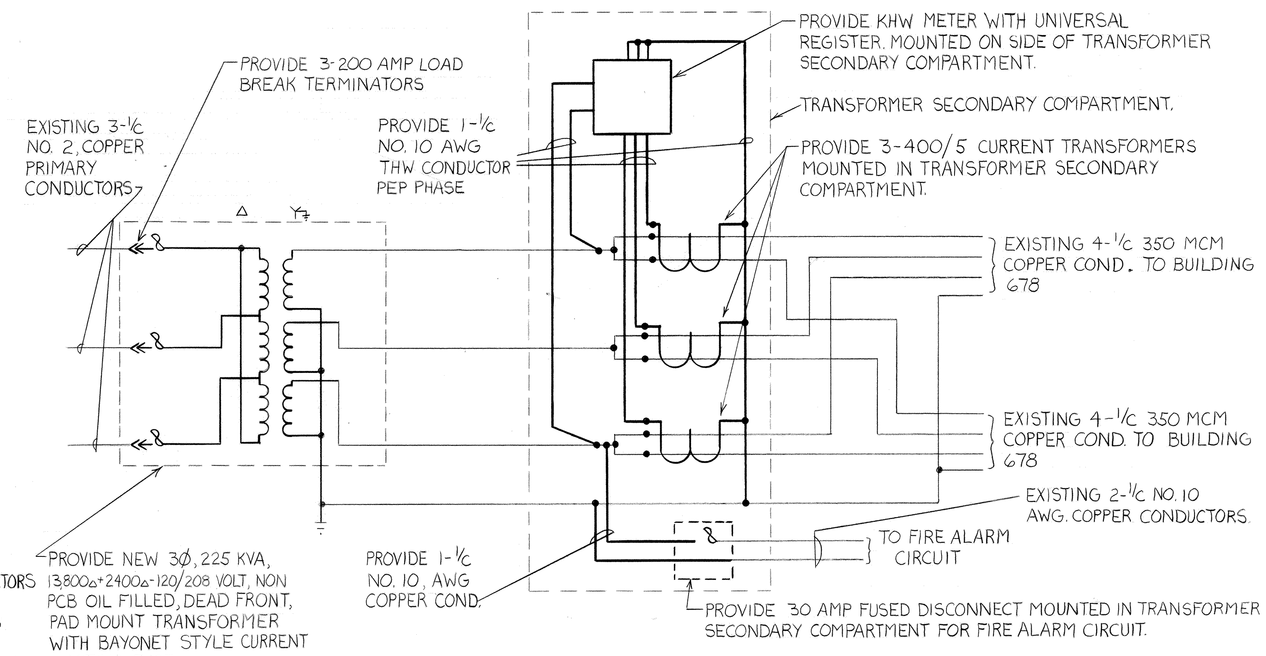

THREE LINE DIAGRAM

NO SCALE

1/8"=1'-0" 0 4 8 12 16 GRAPHIC SCALE IN FEET

1/2"=1'-0" 0 1 2 3 4 GRAPHIC SCALE IN FEET

NORMAN P. BARON ENGINEER No. 15134 COMMONWEALTH OF PENNSYLVANIA

UTILITY ENGINEERS, INC.
37 NORTH WASHINGTON STREET
WILKES-BARRE, PA. 18701

NETC DWG. NO. 26226-262	DEPARTMENT OF THE NAVY — NAVAL FACILITIES ENGINEERING COMMAND		
NETC SK. NO.	NAVAL EDUCATION AND TRAINING CENTER NEWPORT, RHODE ISLAND		
DSGN JJH	PHASE III — PCB TRANSFORMER REMOVAL		
DR.			
BR.			
DIR.	BUILDING 678 CODDINGTON POINT		
APPROVED / DATE			
SATISFACTORY TO / DATE 7-10-87	SIZE F	CODE IDENT NO. 80091	NAVFAC DRAWING NO. 2107351
	SCALE: NOTED		CONSTR. CONTR. NO. N62472-87-C-1747
			SPEC. 04-87-1747 SHEET 2 OF 11