EXISTING TO BE REMOVED
EXISTING TO REMAIN
NEW PIPING

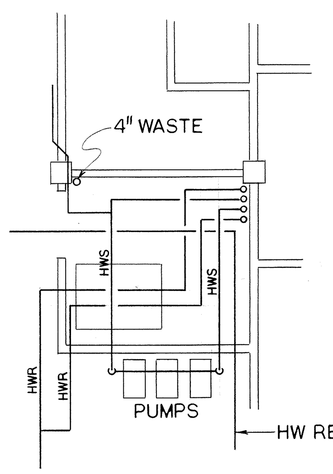

EXISTING CONDITIONS

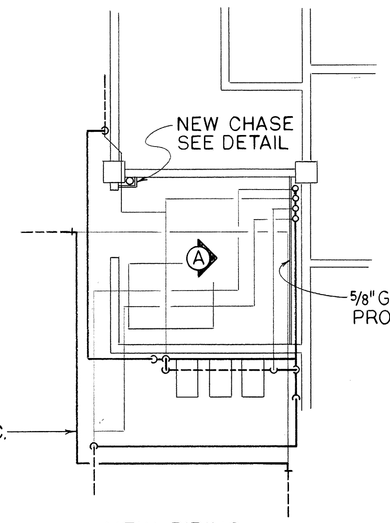

NEW PIPING

MACHINE ROOM PLUMBING
SCALE: 1/4" = 1'-0"

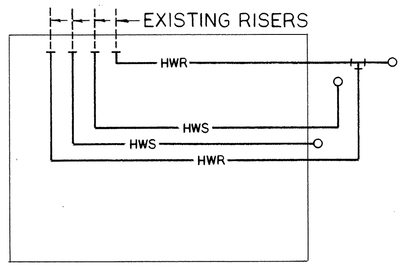

ELEVATION (A)

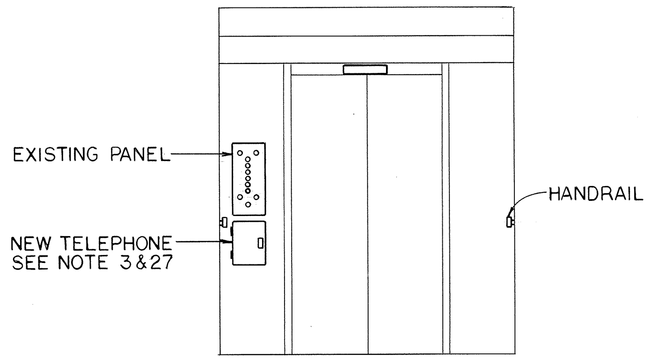

FRONT INTERIOR ELEVATION

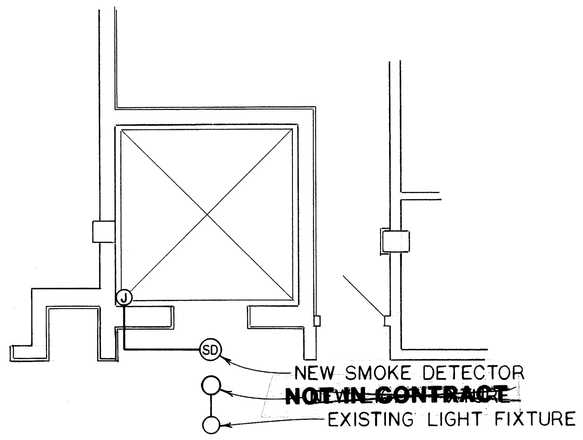

TYPICAL FLOORS 2 THRU 5

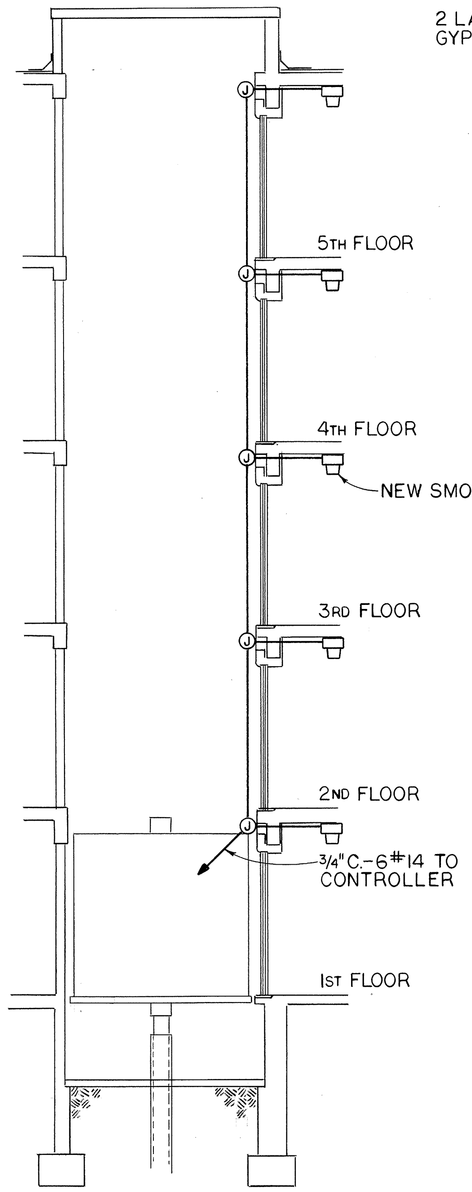

SECTION THRU SHAFT

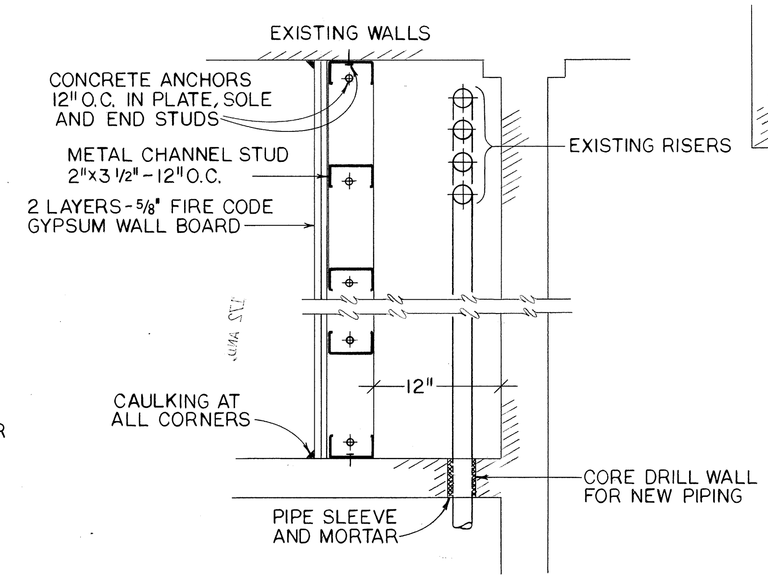

NEW WALL DETAIL
NO SCALE

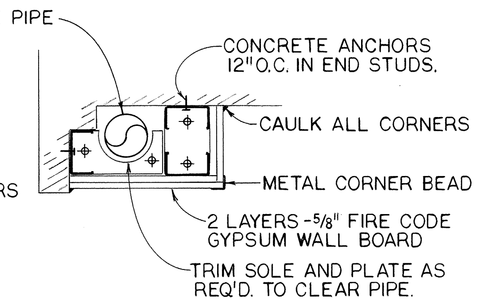

PIPE CHASE DETAIL
NO SCALE

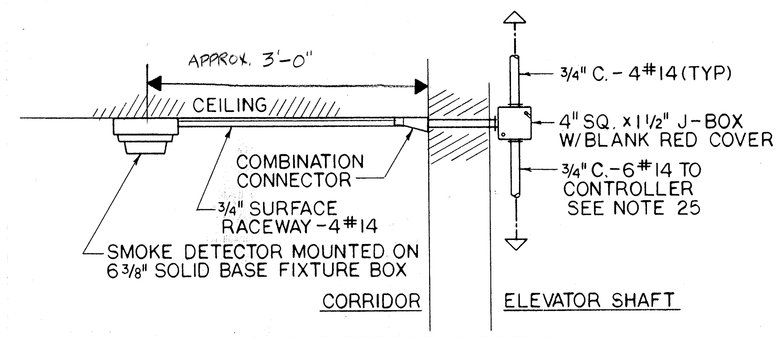

SMOKE DETECTOR DETAIL
NO SCALE TYPICAL FOR 6

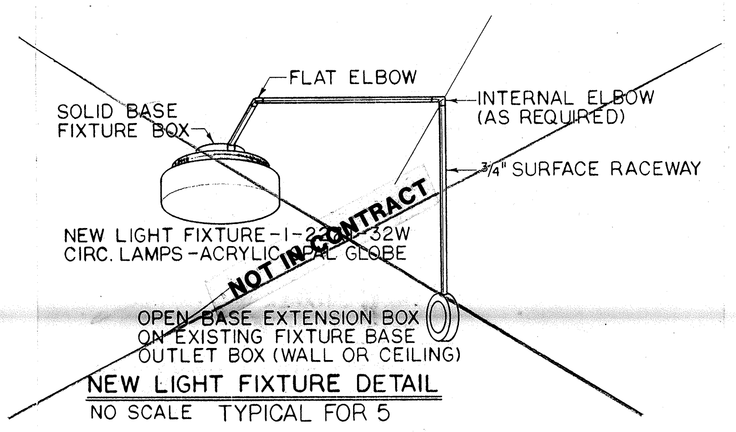

NEW LIGHT FIXTURE DETAIL
NO SCALE TYPICAL FOR 5

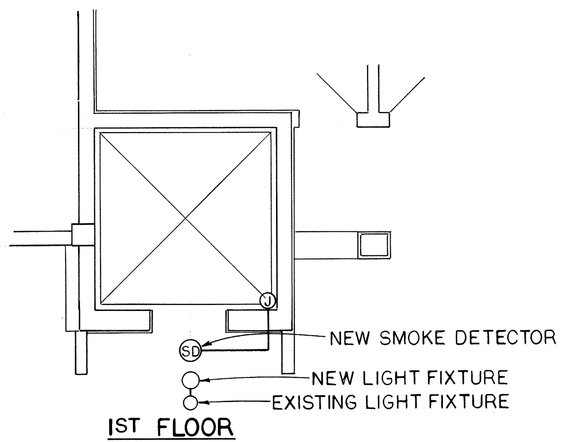

1ST FLOOR

PASSENGER ELEVATOR
SCALE: 1/4" = 1'-0"

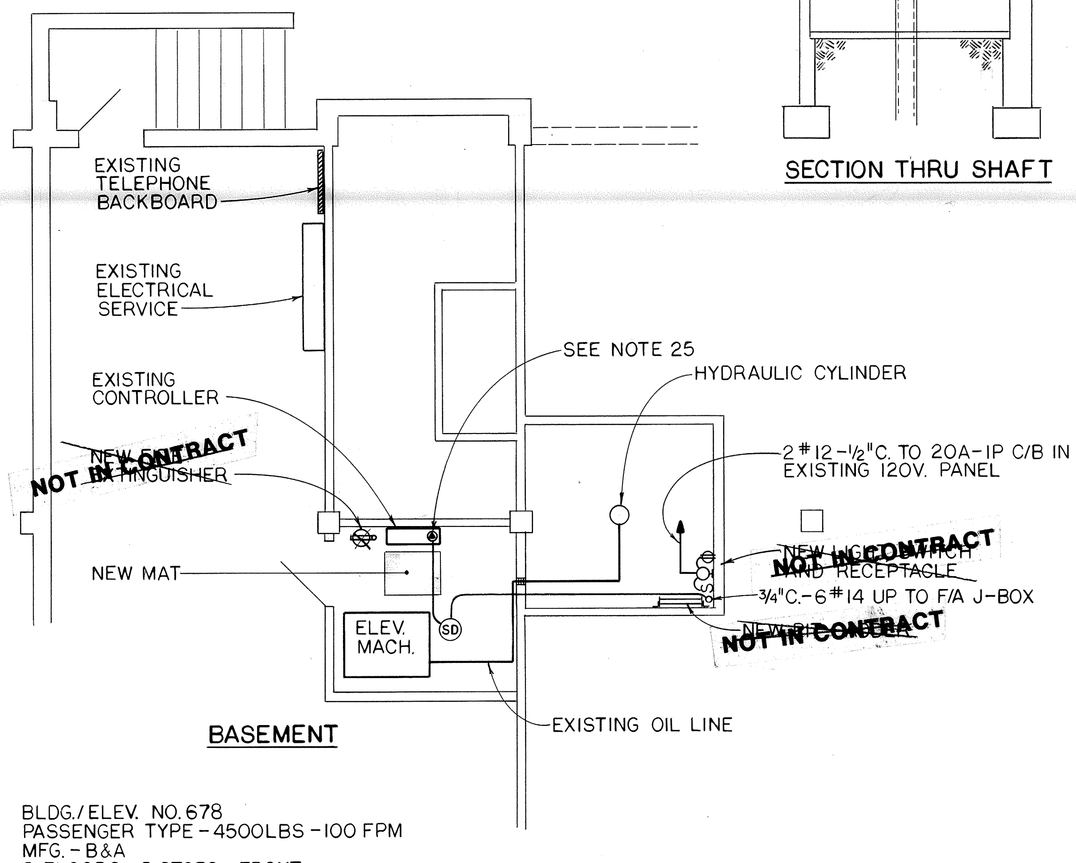

BASEMENT

BLDG./ELEV. NO. 678
PASSENGER TYPE - 4500LBS - 100 FPM
MFG. - B&A
5 FLOORS - 5 STOPS - FRONT
CAR PLATFORM INSIDE
6'-10" x 6'-10" - AREA: 46.6 S.F.
CAR DOOR OPENING - 3'-6"
HORIZONTAL SLIDING DOORS
TYPE OF MACHINE - HYDRAULIC

5 4 3 2 1 0 5 10
GRAPHIC SCALE

PASSENGER ELEVATOR

KEY PLAN

JOHN P. LEGNOS
No. 2350
REGISTERED
PROFESSIONAL ENGINEER

LEGNOS AND CRAMER, INC.
CONSULTING ENGINEERS
248 FARMINGTON AVE. - HARTFORD, CT. 06105

NETC DWG. No. 27550-271	Department of the Navy — Naval Facilities Engineering Command
NETC SK. No.	NAVAL EDUCATION AND TRAINING CENTER NEWPORT, RHODE ISLAND
DSGN: PFC	ELEVATOR MODIFICATIONS BLDG. 678
DR: RJH	
BR:	
DIR:	
APPROVED: DATE 6-14-89	
SATISFACTORY TO:	SIZE F — CODE IDENT. No. — NAVFAC DRAWING No. 2122383
DATE: 5-17-89	SCALE — SPEC: — CONST. CONTR. No. N62472-88-C-1629 — SHEET 4 OF 4

23 MAR 89