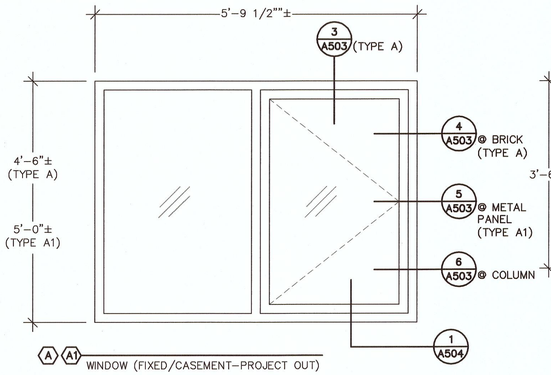

A A1 WINDOW (FIXED/CASEMENT–PROJECT OUT)

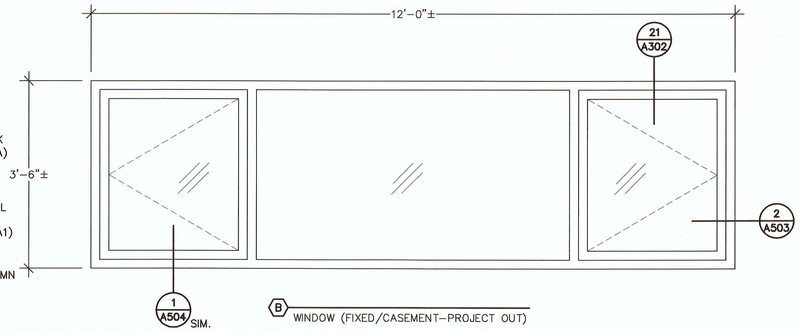

B WINDOW (FIXED/CASEMENT–PROJECT OUT)

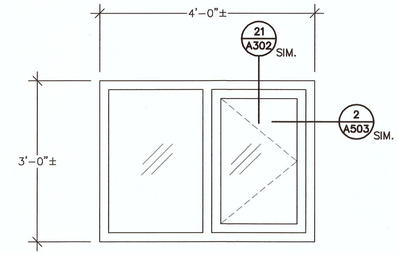

C WINDOW (FIXED/CASEMENT–PROJECT OUT)

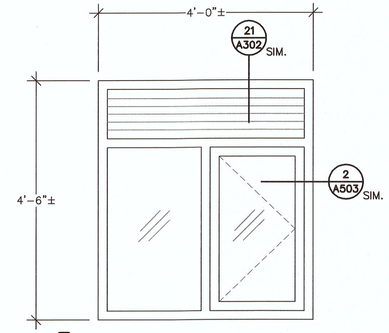

D WINDOW (FIXED/CASEMENT–PROJECT OUT)
**WITH INTEGRAL LOUVER @ TRANSOM

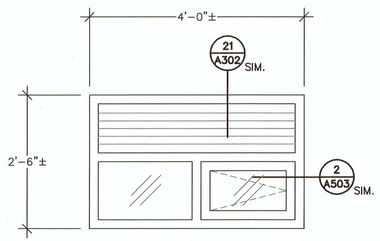

E WINDOW (FIXED/CASEMENT–PROJECT OUT)
**WITH INTEGRAL LOUVER @ TRANSOM

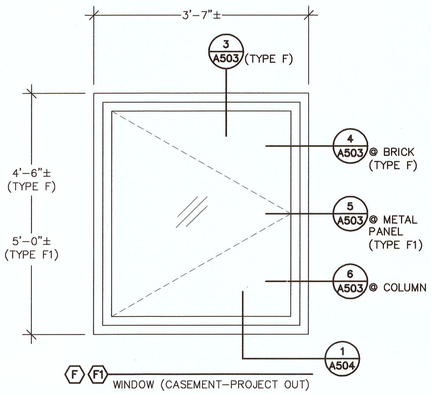

F F1 WINDOW (CASEMENT–PROJECT OUT)

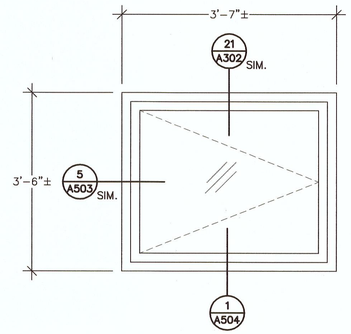

G WINDOW (CASEMENT–PROJECT OUT)

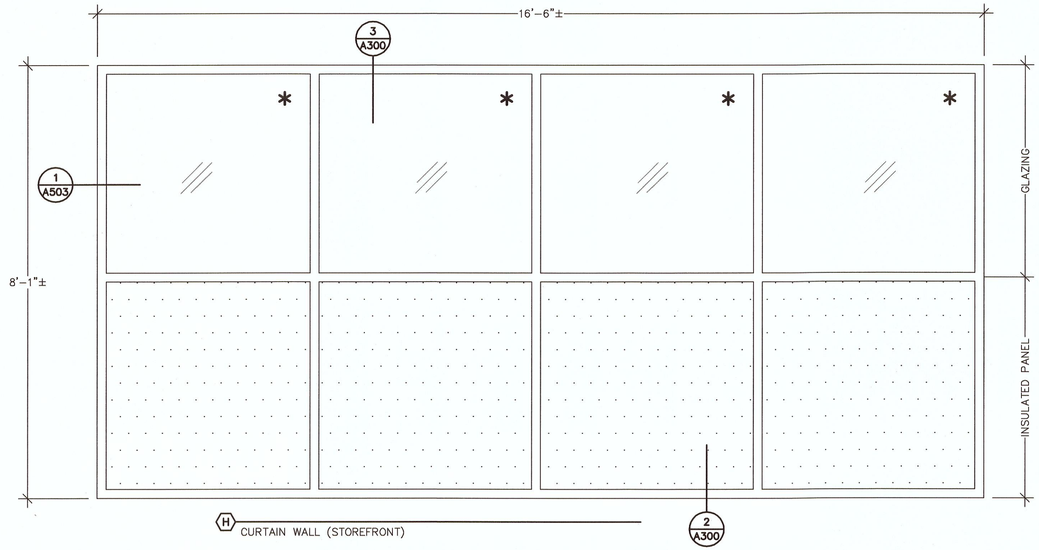

H CURTAIN WALL (STOREFRONT)

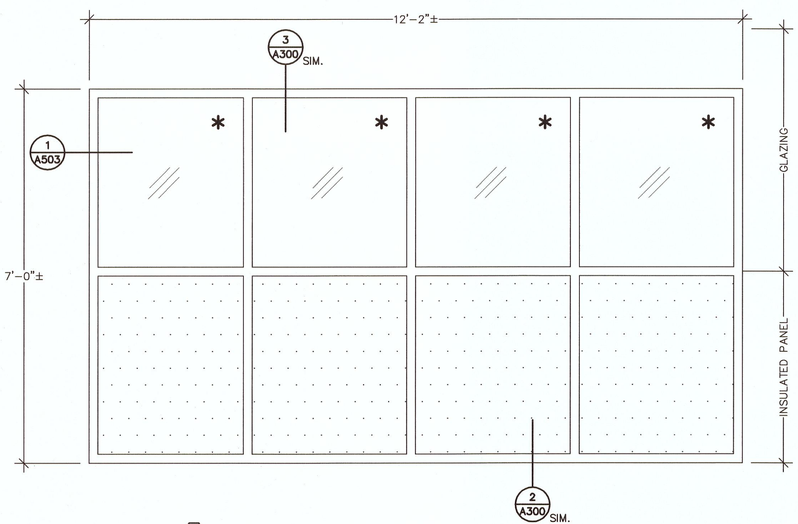

I CURTAIN WALL (STOREFRONT)

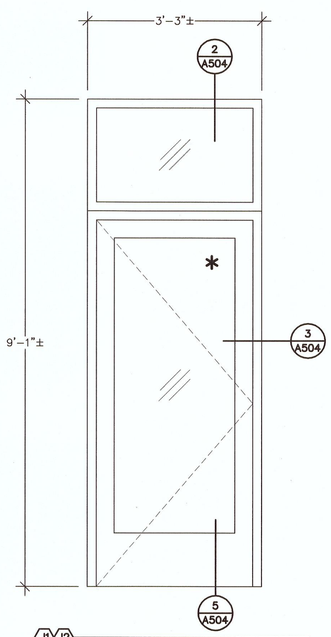

J1 J2 ENTRANCE (SINGLE DOOR W/ TRANSOM)

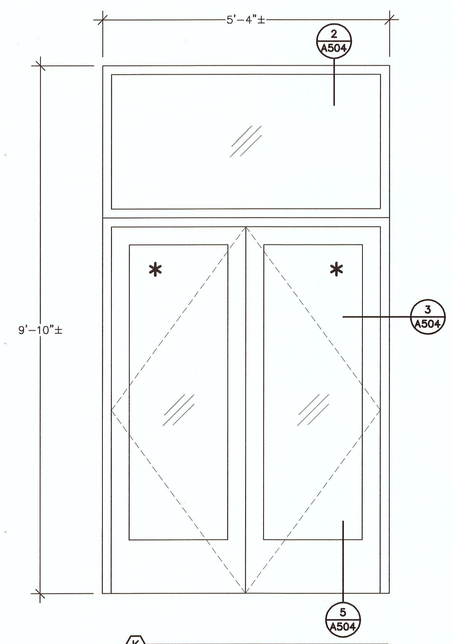

K ENTRANCE (DOUBLE DOOR W/ TRANSOM)

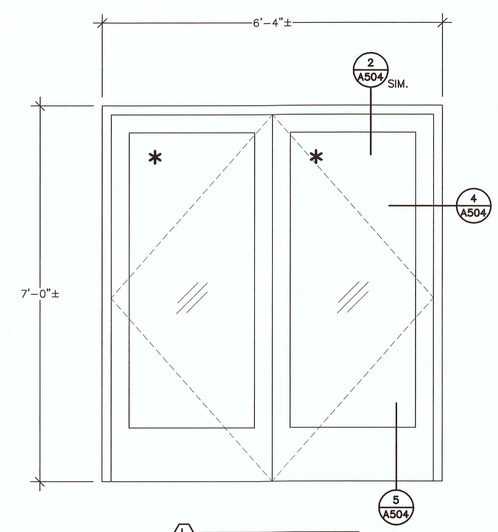

L ENTRANCE (DOUBLE DOOR)

NOTE: REFER TO G102 FOR GENERAL WINDOW NOTES.

* = PROVIDE TEMPERED SAFETY GLASS

SYM	DESCRIPTION	DATE	APPR

NAVFAC

JON F. LINDBERG
No. 6325
REGISTERED PROFESSIONAL ENGINEER
SEAL

GALE
Gale Associates, Inc.
Engineers Planners
163 LIBBEY PARKWAY
WEYMOUTH, MA 02189
P 781.335.6465
F 781.335.6467 www.gainc.com
Boston Baltimore Orlando San Francisco

GALE JN 824502 A/E INFO

APPROVED

FOR COMMANDER NAVFAC

ACTIVITY

SATISFACTORY TO DATE MARCH 2013

DES BHN/HGM	DRW HGM	CHK BHN

<<PM/DM>>

BRANCH MANAGER

CHIEF ENG/ARCH

<<XXX>>

DEPARTMENT OF THE NAVY
NAVAL FACILITIES ENGINEERING COMMAND
NAVAL STATION NEWPORT, RI

NAVAL FACILITIES ENGINEERING COMMAND
NEWPORT, RI

NAVAL STATION NEWPORT, RI

EXTERIOR REPAIRS BUILDING 678
CODDINGTON POINT

WINDOW & DOOR SCHEDULE

SCALE: AS NOTED

EPROJECT NO.: 1116160

CONSTR. CONTR. NO. N40085–11–D–7207–0502

NAVFAC DRAWING NO. 12642097

SHEET 36 OF 66

A600

DRAWFORM REVISION: 10 MARCH 2009

FILE NAME: H:\824502\dwgs\824502_A600.dwg LAYOUT NAME: A600 PLOTTED: Tuesday, April 16, 2013 – 8:48am USER: ceb

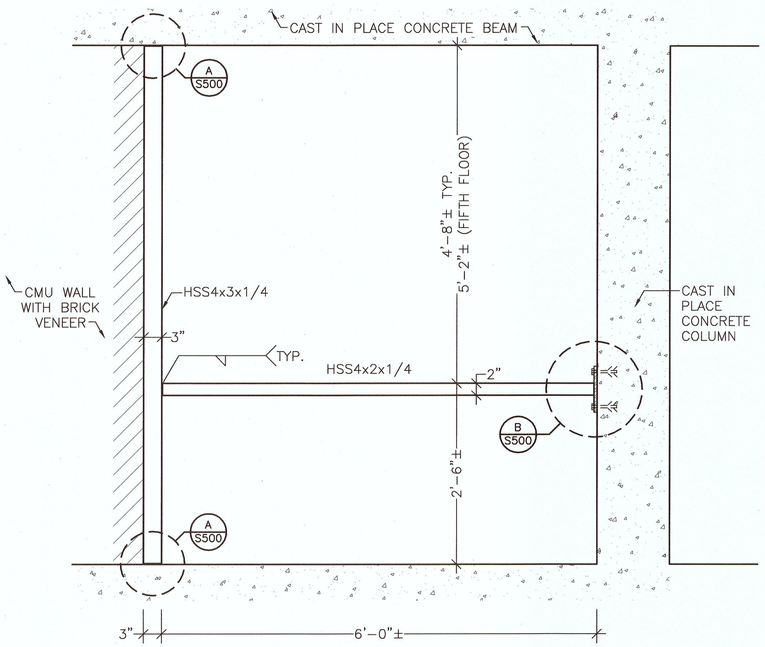

1 TYPICAL OPENING FRAME – EAST/WEST ELEVATIONS (FLOORS 2–5)

SCALE: 1"=1'-0"
ALL ITEMS NEW UNLESS DESIGNATED AS EXISTING

0 1/2' 1' 2'

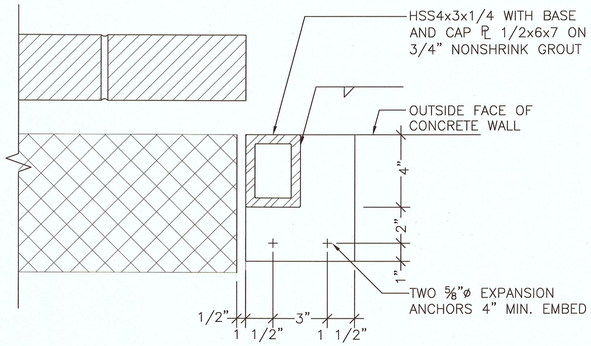

A DETAIL

SCALE: 3"=1'-0"
ALL ITEMS NEW UNLESS DESIGNATED AS EXISTING

0 3" 6" 9"

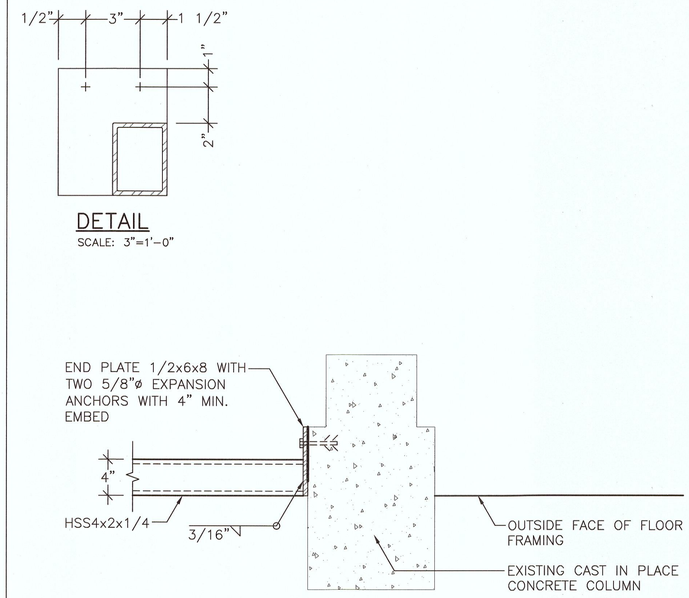

B DETAIL

SCALE: 1 1/2"=1'-0"
ALL ITEMS NEW UNLESS DESIGNATED AS EXISTING

0 3" 6" 12" 18"

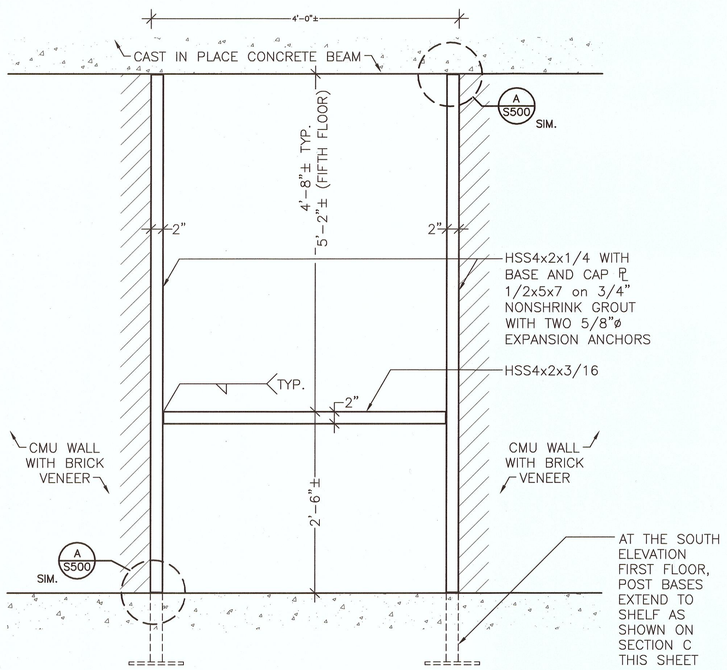

2 TYPICAL OPENING FRAME – NORTH ELEVATION (FLOORS 2–5), SOUTH ELEVATION (FLOORS 1–5)

SCALE: 1 1/2"=1'-0"
ALL ITEMS NEW UNLESS DESIGNATED AS EXISTING

0 3" 6" 12" 18"

NOTE:
PROVIDE SIMILAR FRAMING AROUND PTAC UNITS AT THE FIRST FLOOR OF THE EAST AND WEST ELEVATIONS

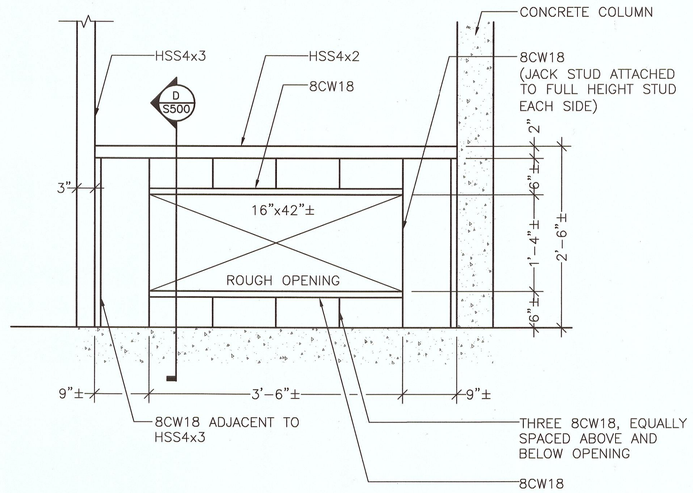

3 ELEVATION

SCALE: 1"=1'-0"
ALL ITEMS NEW UNLESS DESIGNATED AS EXISTING

0 1/2' 1' 2'

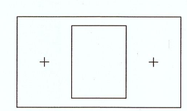

DETAIL

SCALE: 3"=1'-0"

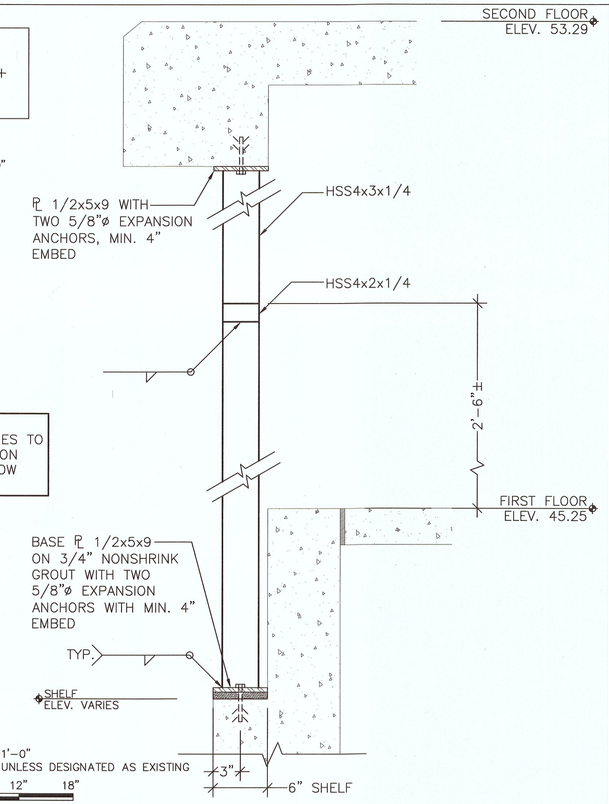

NOTE:
THIS SECTION APPLIES TO THE SOUTH ELEVATION OPENING FOR WINDOW TYPE G ONLY

C SECTION

SCALE: 1 1/2"=1'-0"
ALL ITEMS NEW UNLESS DESIGNATED AS EXISTING

0 3" 6" 12" 18"

SYM	DESCRIPTION	DATE	APPR

NAVFAC

JON F. LINDBERG
No. 6325
REGISTERED PROFESSIONAL ENGINEER
SEAL

GALE
Gale Associates, Inc.
Engineers Planners
163 LIBBEY PARKWAY
WEYMOUTH, MA 02189
P 781.335.6465
F 781.335.6467 www.gainc.com
Boston Baltimore Orlando San Francisco

GALE JN 824502 A/E INFO
APPROVED
FOR COMMANDER NAVFAC
ACTIVITY
SATISFACTORY TO DATE MARCH 2013
DES BHN/HGM DRW CAM CHK BHN
<<CPM/DM>>
BRANCH MANAGER
CHIEF ENG/ARCH
<<OO>>

DEPARTMENT OF THE NAVY
NAVAL FACILITIES ENGINEERING COMMAND
NAVAL FACILITIES ENGINEERING COMMAND NEWPORT, RI
NAVAL STATION NEWPORT, RI
EXTERIOR REPAIRS BUILDING 678
CODDINGTON POINT
STRUCTURAL DETAILS

SCALE: AS NOTED
EPROJECT NO.: 1116160
CONSTR. CONTR. NO. N40085-11-D-7207-0502
NAVFAC DRAWING NO. 12642098
SHEET 37 OF 66
S500

DRAWFORM REVISION: 10 MARCH 2009

FILE NAME: H:\824502\dwgs\824502 S500's.dwg LAYOUT NAME: S500 PLOTTED: Tuesday, April 16, 2013 - 8:48am USER: cab

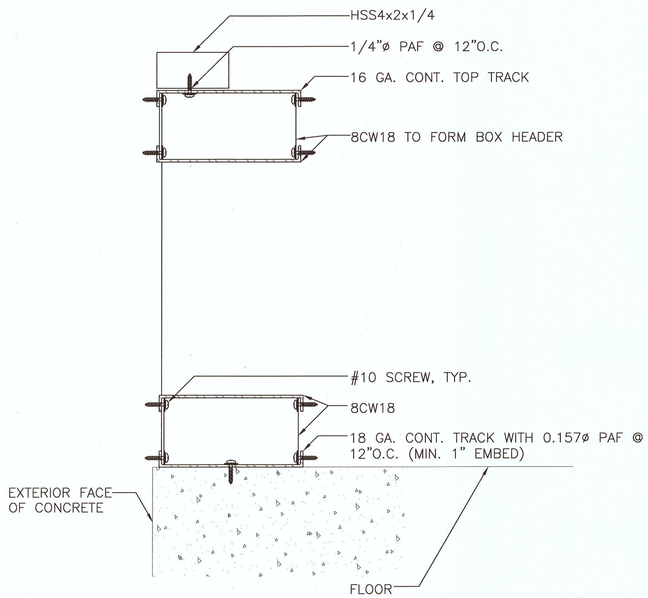

D SECTION
SCALE: 3"=1'-0"
ALL ITEMS NEW UNLESS DESIGNATED AS EXISTING
0 3" 6" 9"

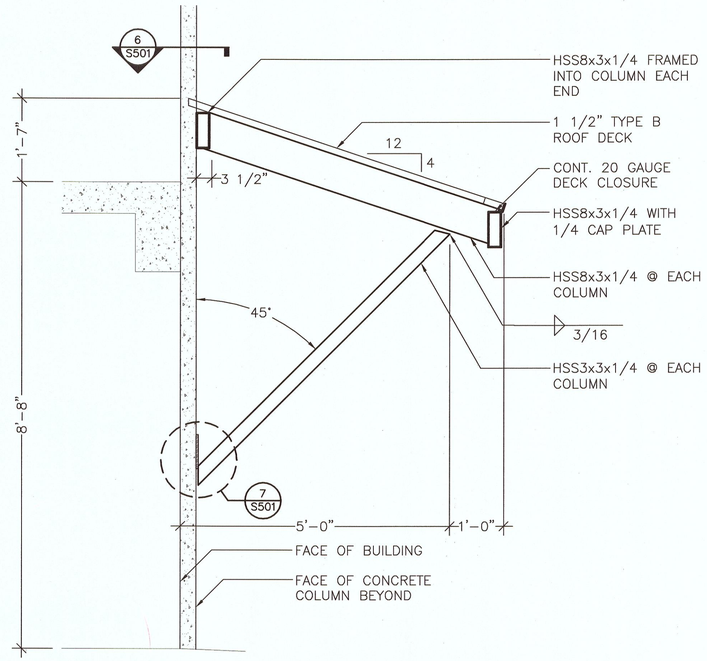

4 CANOPY SECTION
SCALE: 3/4"=1'-0"
ALL ITEMS NEW UNLESS DESIGNATED AS EXISTING
0 1' 2' 3'

NOTE:
PROVIDE EPOXY PRIMER AND TOP COAT FOR ALL STRUCTURAL STEEL COMPONENTS. COLOR OF EXPOSED COMPONENTS TO BE SELECTED BY OWNER

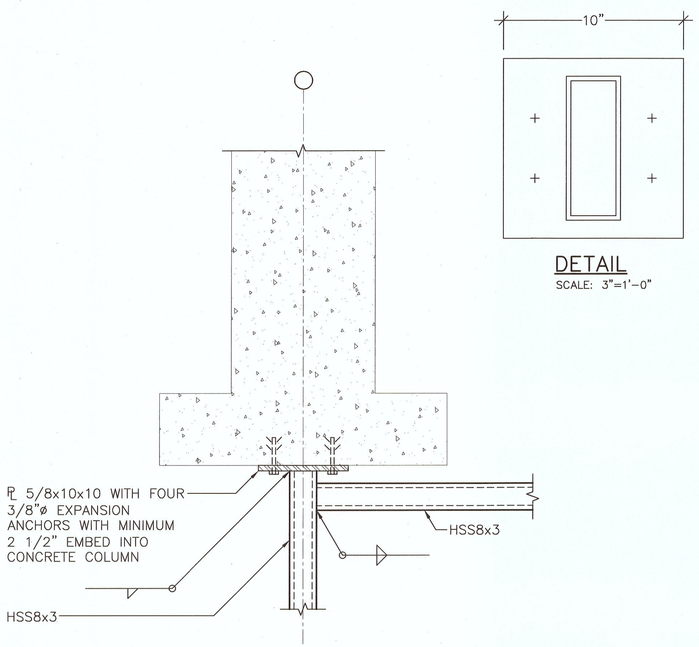

DETAIL
SCALE: 3"=1'-0"

6 PLAN VIEW
SCALE: 1 1/2"=1'-0"
ALL ITEMS NEW UNLESS DESIGNATED AS EXISTING
0 3" 6" 12" 18"

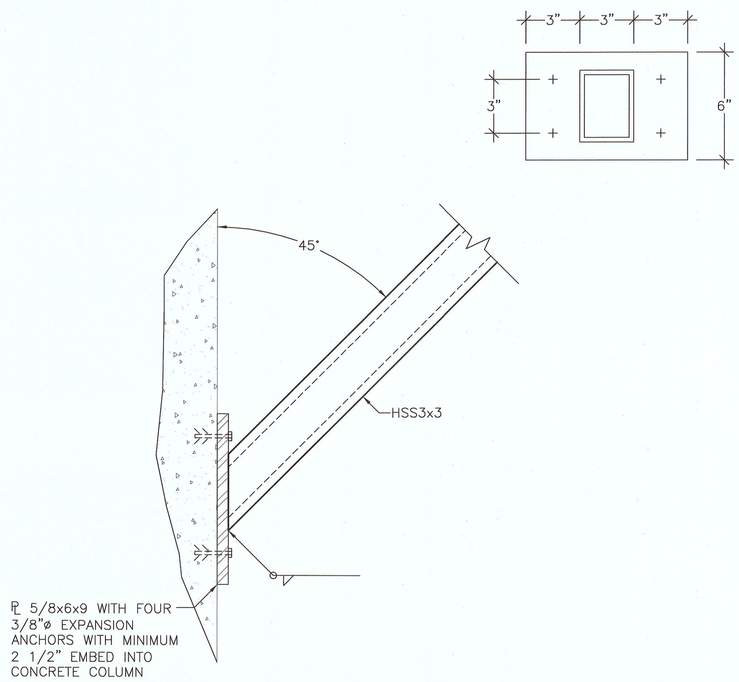

7 SECTION
SCALE: 3/4"=1'-0"
ALL ITEMS NEW UNLESS DESIGNATED AS EXISTING
0 1' 2' 3'

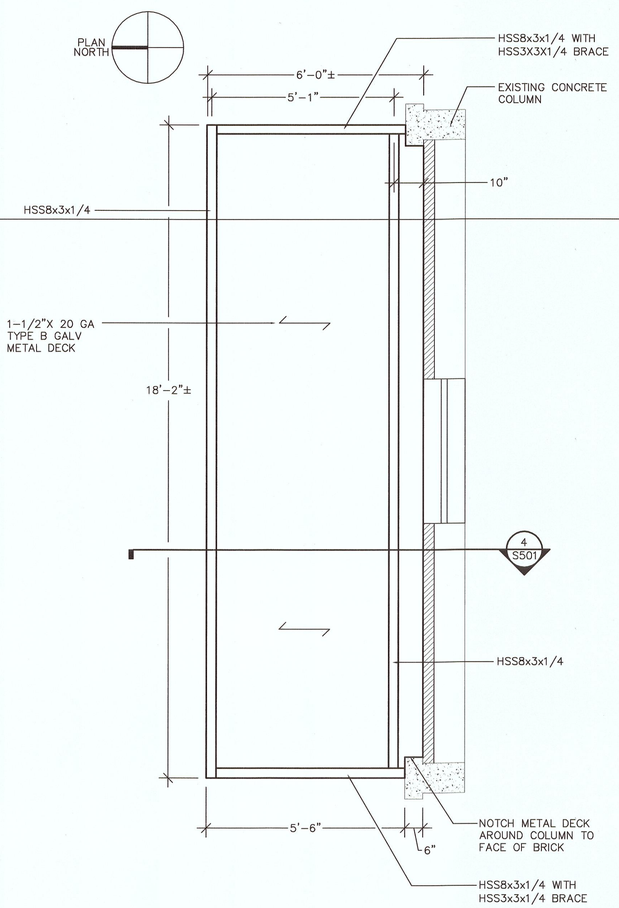

5 NORTH CANOPY FRAMING PLAN
SCALE:1/2"=1'-0"
ALL ITEMS NEW UNLESS DESIGNATED AS EXISTING
0 1' 2' 4'

SYM	DESCRIPTION	DATE	APPR

NAVFAC

JON F. LINDBERG
No. 6325
REGISTERED PROFESSIONAL ENGINEER
SEAL

GALE
Gale Associates, Inc.
Engineers Planners
163 LIBBEY PARKWAY
WEYMOUTH, MA 02189
P 781.335.6465
F 781.335.6467 www.gainc.com
Boston Baltimore Orlando San Francisco

GALE JN 824502 A/E INFO
APPROVED
FOR COMMANDER NAVFAC
ACTIVITY
SATISFACTORY TO DATE MARCH 2013
DES BHN/HGM DRW CAM CHK BHN
<<PM/DM>>
BRANCH MANAGER
CHIEF ENG/ARCH
<<XX>>

DEPARTMENT OF THE NAVY
NAVAL FACILITIES ENGINEERING COMMAND
NAVAL STATION NEWPORT, RI
NAVAL FACILITIES ENGINEERING COMMAND NEWPORT, RI
NAVAL STATION
EXTERIOR REPAIRS BUILDING 678
CODDINGTON POINT
STRUCTURAL DETAILS

SCALE: AS NOTED
EPROJECT NO.: 1116160
CONSTR. CONTR. NO. N40085-11-D-7207-0502
NAVFAC DRAWING NO. 12642099
SHEET 38 OF 66
S501

DRAWFORM REVISION: 10 MARCH 2009

FILE NAME: H:\824502\dwgs\824502 S501.dwg LAYOUT NAME: S501 PLOTTED: Tuesday, April 16, 2013 - 8:49am USER: cab

FILE NAME: J:\2011\20110571 - Newport Naval Station Bldg 678 Electrical\Hvac\Plot Sheets\20110571 - H000 HVAC LEGEND, NOTES AND ABBREV.dwg LAYOUT NAME: Work PLOTTED: Tuesday, April 09, 2013 - 3:47pm USER: fdeaza

ABBREVIATIONS

GENERAL
A COMPRESSED AIR
AD ACCESS DOOR
ADD'L ADDITIONAL
AF AIR FOIL
AFF ABOVE FINISHED FLOOR
AFR ABOVE FINISHED ROOF
ALT ALTITUDE OR ALTERNATE
AMP AMPERE
AP ACCESS PANEL
APD AIR PRESSURE DROP
AS AIR STREAM
ATC AUTOMATIC TEMPERATURE CONTROL
ATM ATMOSPHERE
AVE AVERAGE

BHP BRAKE HORSEPOWER
BI BACKWARDS INCLINED
BLDG BUILDING
BOD BOTTOM OF DUCT
BSMT BASEMENT
BTU BRITISH THERMAL UNIT
BTUH BTU PER HOUR

C TO C CENTER TO CENTER
CENT CENTRIFUGAL
CF CUBIC FEET
CFM CUBIC FEET PER MINUTE
CL CENTERLINE
CLG CEILING OR COOLING
CO CARBON MONOXIDE
COL COLUMN
CONC CONCRETE
CONN CONNECTION
CONTR CONTRACTOR

D DRAIN OR DEPTH
DB DRY BULB TEMPERATURE
DEG DEGREE
DDC DIRECT DIGITAL CONTROL
DIA DIAMETER
DIM DIMENSION
DN DOWN
DP DIFFERENTIAL PRESSURE

EA EACH OR EXHAUST AIR
EAT ENTERING AIR TEMPERATURE
EFF EFFICIENCY
ELEC ELECTRICAL
ELEV ELEVATION
EMER EMERGENCY
EMS ENERGY MANAGEMENT SYSTEM
ENT ENTER
ESP EXTERNAL STATIC PRESSURE
EWT ENTERING WATER TEMPERATURE
EXH EXHAUST
EXIST. EXISTING
EXT EXTERNAL
EXP EXPANSION

F FAHRENHEIT
FA FREE AREA
FC FLEXIBLE CONNECTION
FLA FULL LOAD AMPS
FLEX FLEXIBLE
FLRDR FLOOR DRAIN
FPM FEET PER MINUTE
FPS FEET PER SECOND
FRP FIBERGLASS REINFORCED PLASTIC
FS FLOW SWITCH
FT FEET

G GAS
GA GAUGE
GAL GALLONS
GALV GALVANIZED
GC GENERAL CONTRACTOR
GFU GLYCOL FEED UNIT
GPH GALLONS PER HOUR
GPM GALLONS PER MINUTE
GRD GRADE
GWB GYPSUM WALL BOARD

HB HOSE BIBB CONN.
HD HEAD
HGT HEIGHT
HP HORSEPOWER OR HIGH POINT
HR HOUR
HTG HEATING
HZ HERTZ (FREQUENCY, CYCLES PER SECOND)

ID INSIDE DIAMETER
IN INCHES

KW KILOWATT

L LENGTH
LAT LEAVING AIR TEMPERATURE
LB POUND
LF LINEAR FEET
LP LOW POINT
LRA LOCKED ROTOR AMPS
LUVR LOUVER
LVDR LOUVERED DOOR
LVG LEAVING
LWT LEAVING WATER TEMPERATURE

MAX MAXIMUM
MBH THOUSAND BTUH
MC MECHANICAL CONTRACTOR
MCA MINIMUM CIRCUIT AMPS
MECH MECHANICAL
MEZZ MEZZANINE
MF'R MANUFACTURER
MIN MINIMUM
MU MAKE-UP WATER

N/A NOT APPLICABLE
NC NORMALLY CLOSED OR NOISE CRITERIA
NIC NOT IN CONTRACT
NO NORMALLY OPEN
No. NUMBER
NOM NOMINAL
NTS NOT TO SCALE

OA OUTSIDE AIR
OAI OUTSIDE AIR INTAKE
OC ON CENTER
OD OUTSIDE DIAMETER
ODP OPEN DRIP PROOF
OV OUTLET VELOCITY

PCF POUNDS PER CUBIC FOOT
PD PRESSURE DROP
PH PHASE
PBG PLUMBING
POS PROVIDED BY OTHER SECTION
PSI POUNDS PER SQUARE INCH
PSIA POUNDS PER SQUARE INCH ABSOLUTE
PSID POUNDS PER SQUARE INCH DIFFERENTIAL
PSIG POUNDS PER SQUARE INCH GAUGE
PVC POLYVINYL CHLORIDE

QTY QUANTITY

R RADIUS
RA RETURN AIR
RET RETURN
REQ'D REQUIRED
RH RELATIVE HUMIDITY
RLA RUNNING LOAD AMPS
RLF RELIEF
RM ROOM
RPM REVOLUTIONS PER MINUTE

SCH SCHEDULE
SCR SCREEN
SCT SATURATED CONDENSING TEMPERATURE
SDET SMOKE DETECTOR
SEN SENSIBLE
SHC SENSIBLE HEAT CAPACITY
SP STATIC PRESSURE
SPECS SPECIFICATIONS
SQ SQUARE
SF SQUARE FEET
SS STAINLESS STEEL
STL STEEL
SUP SUPPLY

T TEMPERATURE
TA THROWAWAY
TEL TELEPHONE
TEFC TOTALLY ENCLOSED FAN COOLED
TEMP TEMPERATURE
TSTAT THERMOSTAT
TON 12,000 BTUH COOLING CAPACITY
TOT TOTAL
TYP TYPICAL

UC UNDERCUT DOOR

V VOLTS (ELECTRICAL)
VEL VELOCITY

W WIDTH OR WATT
W/ WITH
WB WET BULB TEMPERATURE
WC WATER COLUMN
WG WATER GAUGE
W/O WITHOUT
WPD WATER PRESSURE DROP
WTD WATER TEMPERATURE DIFFERENCE

X EXISTING EQUIPMENT TO BE REMOVED
XM EXISTING EQUIPMENT TO REMAIN
XN NEW LOCATION OF RELOCATED EQUIPMENT
XR EXISTING EQUIPMENT TO BE RELOCATED

BOILER
B BOILER
BBD BOILER BLOWDOWN
BDT BLOWDOWN TANK
BFU BOILER FEED UNIT
BFP BOILER FEED PUMP

COOLING TOWER
CT COOLING TOWER
CTBD COOLING TOWER BLOW DOWN
CTEQ COOLING TOWER EQUALIZING LINE
CWR CONDENSER WATER RETURN
CWS CONDENSER WATER SUPPLY

DUCT
ACD AUTOMATIC CONTROL DAMPER
AFMS AIR FLOW MEASURING STATION
AL ACOUSTICAL DUCT LINER
BDD BACKDRAFT DAMPER
BOD BOTTOM OF DUCT
CD CEILING DIFFUSER
CV CONSTANT VOLUME SUPPLY AIR TERMINAL
CVE CONSTANT VOLUME EXHAUST AIR TERMINAL
DD DUAL DUCT SUPPLY AIR TERMINAL
DIFF DIFFUSER
EA EXHAUST AIR
EG EXHAUST GRILLE
ER EXHAUST REGISTER
FBD FLAT BOTTOM DUCT
FD FIRE DAMPER (W/ ACCESS DOOR)
LD LINEAR DIFFUSER
MD MOTOR OPERATED DAMPER
MUA MAKE-UP AIR
OA OUTSIDE AIR
OAI OUTSIDE AIR INTAKE
OED OPEN END DUCT
PAD PRIMARY AIR DAMPER
RA RETURN AIR
RG RETURN GRILLE
RR RETURN REGISTER
SA SUPPLY AIR
SD SMOKE DAMPER
SE SMOKE EXHAUST
SFD COMBINATION AUTOMATIC SMOKE/FIRE DAMPER WITH ACCESS DOOR
SG SUPPLY GRILLE
SGD SLIDE GATE DAMPER
SR SUPPLY REGISTER
TA THROW AWAY OR TRANSFER AIR
TG TRANSFER GRILLE
TOD TOP OF DUCT
TR TRANSFER
TSP TOTAL STATIC PRESSURE (IN. WG)
TV TURNING VANES
VD VOLUME DAMPER
VAV VARIABLE AIR VOLUME SUPPLY AIR TERMINAL
VVE VARIABLE AIR VOLUME EXHAUST AIR TERMINAL
WMS WIRE MESH SCREEN

EQUIPMENT
AC AIR CONDITIONING OR AIR CONDITIONING UNIT
ACC AIR COOLED CONDENSING UNIT
ACU AIR CONDITIONING UNIT
AF AIR FILTER OR AIR FOIL
AHU AIR HANDLING UNIT
CACU COMPUTER ROOM AIR CONDITIONING UNIT
CC COOLING COIL
CDP CONDENSATE DRAIN PUMP
CSF CHEMICAL SHOT FEEDER
CUH CABINET UNIT HEATER
DC DRY COOLER
DDC DIRECT DIGITAL CONTROL
DDCFP DIRECT DIGITAL CONTROL FIELD PANEL
DH DEHUMIDIFIER
DU DEAERATOR UNIT
DWDI DOUBLE WIDTH DOUBLE INLET
DX DIRECT EXPANSION
ECH ELECTRIC CABINET HEATER
EF EXHAUST FAN
EHC ELECTRICAL HEATING COIL
ET EXPANSION TANK
EUH ELECTRIC UNIT HEATER
F FAN
FB FAN BOX
FCU FAN COIL UNIT
FTR FINNED TUBE RADIATION
GRV GRAVITY RELIEF VENT
H HUMIDIFIER
HC HEATING COIL
HP HEAT PUMP
HRU HEAT RECOVERY UNIT
HWC HOT WATER HEATING COIL
HV HEATING & VENTILATING UNIT
HX HEAT EXCHANGER
MCC MOTOR CONTROL CENTER
MUA MAKE-UP AIR UNIT
PAC PACKAGE AIR CONDITIONING UNIT
P PUMP
PHC PREHEAT COIL
PHX PLATE HEAT EXCHANGER
PRV PRESSURE REDUCING VALVE
PTAC PACKAGED TERMINAL AIR CONDITIONER
REG REGISTER
RF RETURN FAN
RHC REHEAT COIL
RTU ROOF TOP UNIT
SA SOUND ATTENUATOR
SF SUPPLY FAN
SWSI SINGLE WIDTH SINGLE INLET
TF TRANSFER FAN
TD TRANSFER DUCT
UH UNIT HEATER
UV UNIT VENTILATOR
VAV VARIABLE AIR VOLUME TERMINAL UNIT
VFD VARIABLE FREQUENCY DRIVE
VFM VENTURI FLOW METER
WAC WINDOW AIR CONDITIONER

FUEL OIL
FOG FUEL OIL GAUGE
FOP FUEL OIL PUMP
FOR FUEL OIL RETURN
FOS FUEL OIL SUPPLY
FOV FUEL OIL VENT

HOT WATER
HCR HOT/CHILLED WATER RETURN
HCS HOT/CHILLED WATER SUPPLY
HHWR HIGH TEMPERATURE HOT WATER RETURN
HHWS HIGH TEMPERATURE HOT WATER SUPPLY
HW HOT WATER
HWR HOT WATER RETURN
HWS HOT WATER SUPPLY
UH HOT WATER UNIT HEATER

PIPING
AAV AUTOMATIC AIR VENT
ACV AUTOMATIC CONTROL VALVE
AS AIR SEPARATOR
ATV ATMOSPHERIC VENT
BOP BOTTOM OF PIPE
CO CLEAN-OUT
DOV DRAIN-OFF VALVE
FOB FLAT ON BOTTOM REDUCER
FOT FLAT ON TOP REDUCER
FCV FLOW CONTROL VALVE
MAV MANUAL AIR VENT
MU MAKE-UP WATER
TOP TOP OF PIPE
V VENT

REFRIGERATION
DX DIRECT EXPANSION
HGB REFRIGERANT HOT GAS BYPASS
RD REFRIGERANT DISCHARGE (HOT GAS)
RG REFRIGERANT GAS
RHGB REFRIGERANT HOT GAS BYPASS
RL REFRIGERANT LIQUID
RS REFRIGERANT SUCTION

PIPING LEGEND

GATE VALVE (OUTSIDE SCREW & YOKE UNLESS SPECIFIED OTHERWISE)
GLOBE VALVE (OUTSIDE SCREW & YOKE UNLESS SPECIFIED OTHERWISE)
BALL VALVE
BUTTERFLY VALVE
HOSE END BALL VALVE WITH CAP AND CHAIN
PLUG VALVE
PRESSURE REDUCING VALVE
ANGLE VALVE (SECTION VIEW)
ANGLE VALVE (PLAN VIEW)
GLOBE ANGLE VALVE
CHECK VALVE (SILENT CHECK TYPE ON PUMP DISCHARGE)
STRAINER WITH HOSE END BLOWOFF VALVE, CAP AND CHAIN
SD SUCTION DIFFUSER/STRAINER (NON-REDUCING) WITH BLOWOFF
STRAINER, BASKET TYPE WITH DRAIN VALVE, HOSE BIBB & CAP
STRAINER, DUPLEX BASKET
SOLENOID VALVE
2-WAY MODULATING PRESSURE INDEPENDENT ACV
2-WAY AUTOMATIC CONTROL VALVE (MODULATING)
2-WAY AUTOMATIC CONTROL VALVE (TWO POSITION)
3-WAY AUTOMATIC CONTROL VALVE (MODULATING)
3-WAY AUTOMATIC CONTROL VALVE (TWO POSITION)
AUTOMATIC FLOW LIMITING VALVE (PRESSURE INDEPENDENT)
COMBINATION FLOW METER/SHUT-OFF/BALANCING VALVE (CIRCUIT SETTER)
TRIPLE DUTY PUMP VALVE, CHECK, BALANCING (FLOW METER), SHUT-OFF
BTU BTU METER (HOT TAP TYPE WITH VALVE)
FMT FLOW METER/TRANSMITTER (HOT TAP TYPE WITH VALVE)
VENTURI FLOW METER
ORIFICE FLOW METER
FLOW SWITCH
RELIEF/SAFETY VALVE
THERMOSTATIC RADIATOR VALVE
UNION
BLIND FLANGE
PIPE - CAPPED
PRESSURE GAUGE (W/ BALL VALVE(S), SNUBBER, AND FOR STEAM, SIPHON)
PS PRESSURE SWITCH
THERMOMETER
STEAM TRAP (INDICATE TYPE)
F&T FLOAT & THERMOSTATIC STEAM TRAP
IB INVERTED BUCKET STEAM TRAP
T THERMOSTATIC STEAM TRAP
TD THERMODYNAMIC STEAM TRAP
VB VACUUM BREAKER
PT PRESSURE/THERMOMETER WELL
AV AIR VENT - AUTOMATIC
MV AIR VENT - MANUAL
TAV THERMOSTATIC AIR VENT (STEAM ONLY)
DIRECTION OF FLOW
EXPANSION LOOP
EXPANSION JOINT
FLEXIBLE CONNECTOR
ANCHOR INT
ALIGN GUIDE
PIPE CONNECTION - TOP
PIPE CONNECTION - BOTTOM
PIPE - DOWN
PIPE - UP
PITCH OF PIPE - (R) RISE OR (D) DROP
REDUCER - CONCENTRIC
REDUCER - ECCENTRIC
QUICK CLOSING VALVE, FUSIBLE LINK (USED WITH FUELS)
CO CLEANOUT FOR CONDENSATE DRAIN
DIRT LEG
RISE (DOUBLE LINE - PLAN VIEW)
DROP (DOUBLE LINE - PLAN VIEW)
PIPE BREAK (DOUBLE LINE)
PIPE BREAK (SINGLE LINE)
SECTION BREAK
ELBOW DOWN
ELBOW UP

DUCTWORK

SINGLE LINE | DOUBLE LINE | SINGLE LINE | DOUBLE LINE

WxD — RECTANGULAR SUPPLY DUCT W=WIDTH, D=DEPTH (INCHES UNLESS NOTED OTHERWISE) AS VIEWED — W D 10x6
DIA"Ø — ROUND SUPPLY DUCT (DIA=INSIDE DIAMETER) — DIA 10"Ø
ROUND SUPPLY DUCT UP
ROUND SUPPLY DUCT DOWN
SUPPLY DUCT UP
SUPPLY DUCT DOWN
ROUND RETURN DUCT UP
ROUND RETURN DUCT DOWN
RETURN DUCT UP
RETURN DUCT DOWN
ROUND EXHAUST DUCT UP
ROUND EXHAUST DUCT DOWN
EXHAUST DUCT UP
EXHAUST DUCT DOWN
10x6, 6"Ø — RECTANGULAR DUCT TO ROUND SUPPLY/RETURN/EXHAUST — 6"Ø 10x6
VD — CEILING DUCT MOUNTED DIFFUSER/GRILLE — VD
VD — TAKE-OFF TO DIFFUSER/GRILLE — HARD ELBOW VD
VD — CEILING DUCT MOUNTED DIFFUSER/GRILLE — VD
ACOUSTICALLY LINED DUCT
FLEXIBLE DUCT

WxD — RECTANGULAR RETURN/EXHAUST DUCT W=WIDTH, D=DEPTH (INCHES UNLESS NOTED OTHERWISE) AS VIEWED — W D 10x6
DIA"Ø — ROUND RETURN/EXHAUST DUCT (DIA=INSIDE DIAMETER) — DIA 10"Ø
STANDARD RADIUS ELBOW (R = W) SUPPLY/RETURN/EXHAUST
FULL LENGTH SPLITTER VANES (R < W) SUPPLY/RETURN/EXHAUST — R W
SPLIT TAKE-OFF
RECTANGULAR WYE SUPPLY
HORIZONTAL OFFSET SUPPLY/RETURN/EXHAUST
R/D — CHANGE OF ELEVATION (R)RISE OR (D)DROP SUPPLY/RETURN/EXHAUST — R/D
45° TAP TAKE-OFF
90° TAP TAKE-OFF — 45° TAKEOFF — 45° TAKE-OFF TRANSITION TO ROUND — SQUARE TO ROUND CONNECTION — BELLMOUTH CONNECTION
CONVERGE RETURN/EXHAUST W/45° TAKE-OFFS
SIDEWALL DUCT MOUNTED REGISTER/GRILLE
VD VD — SUPPLY SIDEWALL LINEAR DIFFUSER (W/ SHEETMETAL PLENUM, LINING & BRANCH CONN. FOR EVERY 4' OF LINEAR.) — VD VD
VD VD — SUPPLY CEILING LINEAR DIFFUSER (W/SHEETMETAL PLENUM, LINING & BRANCH CONN. FOR EVERY 4' OF LINEAR.) — VD VD PLENUM BY LD MF'R
OPEN END DUCT W/ 1/2"x1/2" WMS

AFMS AIR FLOW MONITORING STATION
ACD AUTOMATIC CONTROL DAMPER W/ ACCESS DOOR
SGD SLIDE GATE DAMPER
VD MANUAL VOLUME DAMPER
FD SELF-CLOSING FIRE DAMPER W/ ACCESS DOOR
SD AUTOMATIC SMOKE DAMPER W/ ACCESS DOOR
SFD COMBINATION SMOKE/FIRE DAMPER W/ ACCESS DOOR
SDET DUCT MOUNTED SMOKE DETECTOR
BDD BACKDRAFT DAMPER
STANDARD 4-WAY BLOW SUPPLY DIFFUSER
3-WAY BLOW SUPPLY DIFFUSER
OR — 2-WAY BLOW SUPPLY DIFFUSER
ONE-WAY BLOW SUPPLY DIFFUSER
RETURN/EXHAUST GRILLE OR REGISTER
ROOF EXHAUST FAN SHOWN ON ROOF
ROOF EXHAUST FAN SHOWN ON FLOORPLAN
UC 1/2" UNDERCUT DOOR
LVDR 1.5 SF LOUVERED DOOR (FREE AREA)
RETURN OR EXHAUST AIR FLOW
SUPPLY AIR FLOW

DIAGRAM EQUIPMENT SYMBOLS

HUMIDIFIER
FILTER BANK
H C HEATING COIL
HR C HEAT RECOVERY COIL
PH C PREHEAT COIL
REHEAT COIL
C C COOLING COIL
CABINET HEATER
UNIT HEATER
S/S ALM VFD VFDS VFDSO VARIABLE FREQUENCY DRIVE
STARTER S/S CT STARTER
AV AIR SEPARATOR
BOILER
BLOW DOWN SEPARATOR
CONDENSATE PUMP
EXPANSION TANK
FLASH TANK

PUMP
CENTRIFUGAL FAN
CENTRIFUGAL FAN WITH INLET GUIDE VANES
PROPELLER FAN
TUBEAXIAL OR VANEAXIAL FAN
INLINE CENTRIFUGAL FAN
UPBLAST FAN
ROOF FAN
OPPOSED BLADE DAMPER W/ TWO POSITION ACTUATOR
OPPOSED BLADE DAMPER W/ MODULATING ACTUATOR
PARALLEL BLADE DAMPER W/ TWO POSITION ACTUATOR
PARALLEL BLADE DAMPER W/ MODULATING ACTUATOR
BACKDRAFT DAMPER
2-WAY AUTOMATIC CONTROL VALVE (MODULATING)
2-WAY AUTOMATIC CONTROL VALVE (TWO POSITION)
3-WAY AUTOMATIC CONTROL VALVE (MODULATING)
3-WAY AUTOMATIC CONTROL VALVE (TWO POSITION)
FINNED TUBE RADIATION
SHELL AND TUBE HEAT EXCHANGER
PLATE AND FRAME HEAT EXCHANGER
CHEMICAL FEED SYSTEM

PIPING ABBREVIATIONS

— HWR — HOT WATER RETURN
— HWS — HOT WATER SUPPLY

HVAC GENERAL NOTES

1. GENERAL NOTES APPLY TO ALL DRAWINGS.
2. THIS PROJECT INVOLVES CONSTRUCTION INSIDE AN EXISTING STRUCTURE. CONTRACTORS, BY SUBMITTING A BID, ARE DEEMED TO BE COMPLETELY FAMILIAR WITH THE EXISTING CONDITION OF THE BUILDING AS IT INFLUENCES THE WORK DESCRIBED. ABSOLUTELY NO CLAIMS FOR EXTRA COMPENSATION WILL BE CONSIDERED FOR EXISTING CONDITIONS VISIBLE OR REASONABLY INFERABLE FROM A CAREFUL EXAMINATION OF THE EXISTING BUILDING.
3. THIS CONTRACTOR SHALL INSPECT THE EXISTING FIELD CONDITIONS AT THE SITE AND THE "AS-BUILT" BASE BUILDING CONTRACT DOCUMENTS PRIOR TO THE START OF ANY WORK TO DETERMINE WHAT EFFECT THE EXISTING CONDITIONS WILL HAVE ON HIS WORK. POTENTIAL PROBLEM AREAS SHALL BE BROUGHT TO THE ATTENTION OF THE ARCHITECT AND/OR ENGINEER IMMEDIATELY.
4. THIS CONTRACTOR SHALL CONNECT HIS WORK TO VARIOUS EXISTING PIPING, DUCTWORK, AND CONTROL SYSTEMS IN THE BASE BUILDING. THE NEW WORK SHALL BE COMPATIBLE WITH THE EXISTING SYSTEMS. LOCATION OF EQUIPMENT OR THE ROUTING OF THE VARIOUS SYSTEMS AS WELL AS OPENINGS IN FLOOR SLABS OR WALLS SHALL BE GOVERNED BY THE EXISTING CONDITIONS AS THEY APPEAR IN THE FIELD OR ON THE "AS-BUILT" DRAWINGS.
5. CARE SHALL BE TAKEN DURING THE INSTALLATION TO NOT DAMAGE OR INTERRUPT BUILDING SYSTEMS AND SERVICES THAT ARE ALREADY INSTALLED. DAMAGE TO SUCH SYSTEMS OR EQUIPMENT CAUSED BY THIS CONTRACTOR DURING INSTALLATION SHALL BE REPAIRED AND/OR REPLACED AT THIS CONTRACTOR'S EXPENSE TO THE COMPLETE SATISFACTION OF THE BUILDING OWNER.
6. SHUTDOWN OF EXISTING SYSTEMS FOR CONNECTION TO EXISTING SERVICES SHALL BE COORDINATED WITH THE CONSTRUCTION MANAGER OR GENERAL CONTRACTOR AND BUILDING OWNER. THIS CONTRACTOR SHALL SUBMIT REQUESTS, WHERE THEY AFFECT THE OPERATION OF THE BUILDING SYSTEMS, AT LEAST ONE WEEK IN ADVANCE OF ANY REQUIRED SHUTDOWN. THE ACTUAL SHUTDOWN PERIOD SHALL BE AS SHORT AS POSSIBLE AND AT A TIME MUTUALLY AGREEABLE TO THE BUILDING OWNER AND THE CONSTRUCTION MANAGER/GENERAL CONTRACTOR.
7. DRAWINGS ARE DIAGRAMMATIC, THEREFORE DETERMINE EXACT LOCATIONS OF SYSTEMS AND COMPONENTS IN FIELD.
8. ALL WORK SHALL BE COORDINATED WITH ALL TRADES INVOLVED. OFFSETS IN PIPING AND DUCTS (INCLUDING DIVIDED DUCTS) AND TRANSITIONS AROUND OBSTRUCTIONS SHALL BE PROVIDED AT NO ADDITIONAL COST TO THE OWNER.
9. VERIFY ALL EQUIPMENT CONNECTIONS WITH MANUFACTURER'S CERTIFIED DRAWINGS. VERIFY AND PROVIDE DUCT AND/OR PIPE TRANSITIONS TO FURNISHED EQUIPMENT. FIELD VERIFY AND COORDINATE ALL DIMENSIONS BEFORE FABRICATION.
10. ALL MATERIALS AND EQUIPMENT UNLESS SPECIFICALLY INDICATED AS REUSED, SHALL BE NEW.
11. ACCESS PANELS SHALL BE PROVIDED TO ALLOW FOR CLEANING OF COILS AND SERVICING OF DAMPERS, HEATERS, VALVES, AND ALL CONCEALED MECHANICAL EQUIPMENT.
12. INSTALL NEW ROOM THERMOSTATS AND SENSORS 4 FEET AFF OR AS DIRECTED OTHERWISE BY ARCHITECT.
13. THE FIRE PROOFING OF THE BUILDING STRUCTURE IS NOT TO BE REMOVED FOR THE INSTALLATION OF HANGERS, SUPPORTS, DUCTWORK, ETC. IF FIRE PROOFING IS DAMAGED, IT SHALL BE REPAIRED AT THE EXPENSE OF THE TRADE.
14. CONTRACTOR SHALL TEST AND CALIBRATE ALL CONTROLS AND VERIFY ALL ARE FULLY FUNCTIONAL AND SUBMIT DOCUMENTATION. SEE SPECIFICATIONS FOR ADDITIONAL REQUIREMENTS.
15. CONTRACTOR SHALL PROVIDE AND SUBMIT DOCUMENTATION FOR TESTING AND BALANCING OF ALL WATER SYSTEMS, PIPING PRESSURE AND LEAKAGE TESTS, OPERATING AND MAINTENANCE MANUALS, AND AS BUILT DRAWINGS. SEE SPECIFICATIONS FOR ADDITIONAL REQUIREMENTS.
16. REFER TO THE PROJECT SPECIFICATIONS FOR FURTHER REQUIREMENTS.
17. MANY EQUIPMENT SCHEDULES DO NOT LIST QUANTITIES. CONTRACTOR SHALL REFER TO ALL DRAWINGS AND PROVIDE THE REQUIRED QUANTITIES FOR ALL COMPONENTS.

CONTROL POINT DESCRIPTOR LEGEND

TAG (oval) — ATC CONTRACTOR PROVIDED DDC POINT AND HARDWARE
TAG (triangle) ELEC PLBG — CONTROL DEVICE FURNISHED BY ELECTRICAL OR PLUMBING CONTRACTOR BUT INTERFACED TO DDC SYSTEM BY ATC CONTRACTOR
TAG (rectangle) — ATC CONTRACTOR INTERFACE TO EQUIPMENT MANUFACTURER'S HARDWARE
TAG (circle) — ATC CONTRACTOR PROVIDED LOCAL CONTROL POINT

CONTROL ABBREVIATIONS

ACD AUTOMATIC CONTROL DAMPER
ACV AUTOMATIC CONTROL VALVE
AFMS AIR FLOW MEASURING STATION
ALM ALARM
ATC AUTOMATIC TEMPERATURE CONTROL

BCV BASEBOARD CONTROL VALVE
BDD BACKDRAFT DAMPER (ADJUSTABLE COUNTERWEIGHT)
BIBO BAG-IN BAG-OUT
BV BYPASS VALVE

C CARBON DIOXIDE SENSOR
CAP CAPACITY CONTROL
%CAP PERCENT OF FULL LOAD CAPACITY
CCLT COOLING COIL LEAVING AIR TEMPERATURE SENSOR
CHRT CHILLED WATER RETURN TEMPERATURE SENSOR
CHST CHILLED WATER SUPPLY TEMPERATURE SENSOR
CHWRT CHILLED WATER RESET TEMPERATURE
CO CARBON MONOXIDE SENSOR
CRT CONDENSER WATER RETURN TEMPERATURE SENSOR
CST CONDENSER WATER SUPPLY TEMPERATURE SENSOR
CT CURRENT TRANSFORMER (STATUS FEEDBACK)
CV COOLING COIL CONTROL VALVE

DAT DISCHARGE AIR TEMPERATURE SENSOR
DDC DIRECT DIGITAL CONTROL
DDCFP DIRECT DIGITAL CONTROL FIELD PANEL
DL DEMAND LIMIT
DPS DIFFERENTIAL PRESSURE SWITCH
DPT DIFFERENTIAL PRESSURE SENSOR/TRANSMITTER
DPV DIFFERENTIAL PRESSURE BYPASS VALVE
DSP DISCHARGE STATIC PRESSURE SENSOR
DWDI DOUBLE WIDTH DOUBLE INLET

EAD EXHAUST AIR DAMPER
EHRET EXHAUST HEAT RECOVERY COIL ENTERING AIR TEMPERATURE SENSOR
EHRLT EXHAUST HEAT RECOVERY COIL LEAVING AIR TEMPERATURE SENSOR
EHRV EXHAUST HEAT RECOVERY COIL CONTROL VALVE
ES END SWITCH

FA FAULT ALARM
FID FAN ISOLATION DAMPER
FMT FLOW METER/TRANSMITTER
FS FLOW SWITCH
FZ FREEZESTAT

H HUMIDITY SENSOR
HALM HOOD ALARM
HCLT HEATING COIL LEAVING AIR TEMPERATURE SENSOR
HEGA HIGH EFFICIENCY GAS ABSORBER FILTER
HEPA HIGH EFFICIENCY PARTICULATE AIR FILTER
HGB HOT GAS BYPASS
HHL HIGH HUMIDITY LIMIT SENSOR
HIV HUMIDIFIER ISOLATION VALVE
HLH HIGH/LOW HUMIDITY LIMIT SENSOR
HOA HANDS-OFF AUTOMATIC SWITCH
HR HUMIDITY SENSOR (ROOM)
HRET HEAT RECOVERY COIL ENTERING AIR TEMPERATURE SENSOR
HRLT HEAT RECOVERY COIL LEAVING AIR TEMPERATURE SENSOR
HRT HEAT RECOVERY LOOP TEMPERATURE SENSOR
HRCV HEAT RECOVERY COIL CONTROL VALVE
HRV HEAT RECOVERY LOOP CONTROL VALVE
HS HAND SWITCH
HSPS HIGH STATIC PRESSURE SWITCH
HSS HOOD SASH SWITCH
HUV HUMIDIFIER CONTROL VALVE
HV HEATING COIL CONTROL VALVE
HWRT HOT WATER RETURN TEMPERATURE SENSOR
HWST HOT WATER SUPPLY TEMPERATURE SENSOR

IFBD INTEGRAL FACE & BYPASS DAMPER
IGV INLET GUIDE VANES

LAT LEAVING AIR TEMPERATURE SENSOR
LSPS LOW STATIC PRESSURE SWITCH
LS LEVEL SENSOR OR LIGHT SWITCH INTERFACE
LSHA LEVEL SENSOR HIGH ALARM
LSHS LEVEL SENSOR HIGH SWITCH
LSLA LEVEL SENSOR LOW ALARM
LSLS LEVEL SENSOR LOW SWITCH

MAT MIXED AIR TEMPERATURE SENSOR
MUWV MAKE-UP WATER VALVE
MD MOTION DETECTOR

NC NORMALLY CLOSED (ON LOSS OF POWER)
NO NORMALLY OPEN (ON LOSS OF POWER)

OAD OUTSIDE AIR DAMPER
OAH OUTSIDE AIR HUMIDITY SENSOR (FOR WET BULB READING)
OAT OUTSIDE AIR TEMPERATURE SENSOR (DRY BULB)

PAD PRIMARY AIR DAMPER
PCHRT PRIMARY CHILLED WATER RETURN TEMPERATURE SENSOR
PCHST PRIMARY CHILLED WATER SUPPLY TEMPERATURE SENSOR
PR PRESSURE SENSOR (ROOM)

RAD RETURN AIR DAMPER
RAH RETURN AIR HUMIDITY SENSOR
RAT RETURN AIR TEMPERATURE SENSOR
RV REHEAT CONTROL VALVE
RH RELATIVE HUMIDITY
RI RUN INDICATOR
RSID RETURN SMOKE ISOLATION DAMPER

S SWITCH
SAD SUPPLY AIR DAMPER
SCHRT SECONDARY CHILLED WATER RETURN TEMPERATURE
SCHST SECONDARY CHILLED WATER SUPPLY TEMPERATURE
SCLAT STEAM COIL LEAVING AIR TEMPERATURE SENSOR
SCV STEAM COIL VALVE
SD SMOKE DAMPER
SDET SMOKE DETECTOR
SFD SMOKE/FIRE DETECTOR
SP STATIC PRESSURE SENSOR
SPD SPEED CONTROL
S/S START/STOP
S/S H START/STOP HIGH SPEED/CAPACITY
S/S L START/STOP LOW SPEED/CAPACITY
SSID SUPPLY SMOKE ISOLATION DAMPER
SSP SUCTION STATIC PRESSURE SENSOR

T TEMPERATURE SENSOR/THERMOSTAT
TR TEMPERATURE SENSOR/THERMOSTAT (ROOM)

VFDS VARIABLE FREQUENCY DRIVE SPEED
VFDO VARIABLE FREQUENCY DRIVE SPEED OUTPUT (FEEDBACK)
VS VIBRATION SWITCH

WC WATER COLUMN

X REMOVE EXISTING ITEM

CALLOUT SYMBOLS

CONNECT NEW TO EXISTING
LIMIT OF DEMOLITION
A / H2.0 — SECTION DESIGNATION / SHEET NUMBER
REVISION NUMBER
TEMPERATURE SENSOR OR THERMOSTAT
HUMIDITY SENSOR OR HUMIDISTAT
REMOVE EXISTING ITEM
SA(100) — S = SUPPLY A = SCHEDULED DIFFUSER. (100) = CFM TO BALANCE TO
RA(100) — R = RETURN A = SCHEDULED GRILLE. (100) = CFM TO BALANCED TO
EA(100) — E = EXHAUST A = SCHEDULED REGISTER/GRILLE (100) = CFM TO BALANCED TO
TA(100) — T = TRANSFER A = SCHEDULED REGISTER/GRILLE (100) = CFM TO BALANCED TO

EQUIPMENT REQUIRING ELECTRICAL SERVICE,
SEE SCHEDULE FOR PERFORMANCE REQUIREMENTS:
TAG 3.1 (XXX, XXX, XXX)
- SCHEDULED EQUIPMENT UNIT NUMBER
- FIRST DIGIT(S) = LEVEL WHERE UNIT IS LOCATED:
  - B = BASEMENT
  - 1 = FIRST FLOOR
  - 2 = SECOND FLOOR
  - R = ROOF
- SECOND DIGIT(S):
  - 1 = FIRST UNIT OF THIS EQUIPMENT TYPE ON THIS LEVEL.
  - 2 = SECOND UNIT OF THIS EQUIPMENT TYPE ON THIS LEVEL.
  - 3 = THIRD UNIT OF THIS EQUIPMENT TYPE ON THIS LEVEL, ETC.
  - (DUE TO EDITING NOT ALL NUMBERS MAY BE USED)
- UNIT CAPACITY INFORMATION (IF APPLICABLE-DATA VARIES DEPENDING ON TYPE OF EQUIPMENT) i.e. FOR FAN POWERED VAV BOXES:
  - FIRST NUMBER = MAX. CFM
  - SECOND NUMBER = MIN. CFM OR PERCENT OF MAX. CFM
  - THIRD NUMBER = COIL GPM OR KW

EQUIPMENT NOT REQUIRING ELECTRICAL SERVICE,
SEE SCHEDULE FOR PERFORMANCE REQUIREMENTS:
TAG 3.1 (XXX, XXX, XXX) — REFER TO EQUIPMENT REQUIRING ELECTRICAL SERVICE SYMBOL ABOVE FOR TAG AND DATA INFORMATION.

FIN TUBE RADIATORS
TAG B.1 (LENGTH, GPM) — REFER TO EQUIPMENT REQUIRING ELECTRICAL SERVICE SYMBOL ABOVE FOR TAG AND DATA INFORMATION.

RDK ENGINEERS
Andover, MA - Boston, MA - Amherst, MA
Durham, NC - Charlotte, NC
RDK Engineers
200 Brickstone Square
Andover, MA 01810-1488
T. 978-296-6200

SYM	DESCRIPTION	DATE	APPR

NAVFAC

GREGORY J. TITTERINGTON
No. 5870
REGISTERED PROFESSIONAL ENGINEER
SEAL

GALE
Gale Associates, Inc.
Engineers Planners
163 LIBBEY PARKWAY
WEYMOUTH, MA 02189
P 781.335.6465
F 781.335.6467 www.gainc.com
Boston Baltimore Orlando San Francisco

GALE JN 824502 A/E INFO
APPROVED
FOR COMMANDER NAVFAC
ACTIVITY
SATISFACTORY TO DATE APRIL 12, 2013
DES HH | DRW HH | CHK BO
<<PM/DM>>
BRANCH MANAGER
CHIEF ENG/ARCH
<<XX>>

DEPARTMENT OF THE NAVY
NAVAL FACILITIES ENGINEERING COMMAND
NAVAL FACILITIES ENGINEERING COMMAND NEWPORT, RI
NAVAL STATION
NAVAL STATION NEWPORT, RI
EXTERIOR REPAIRS BUILDING 678
CODDINGTON POINT
HVAC LEGEND, NOTES & ABBREVIATIONS

SCALE: NTS
EPROJECT NO.: 1116160
CONSTR. CONTR. NO. N40085-11-D-7207-0502
NAVFAC DRAWING NO. 12642100
SHEET 39 OF 66
H000
DRAWFORM REVISION: 10 MARCH 2009

REMOVE EXISTING SIGN.

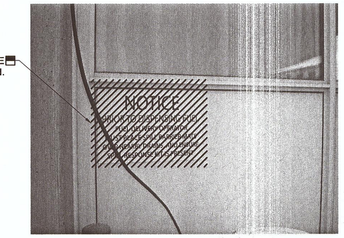

PHOTOGRAPH NO.2

EXISTING SIGN SHALL BE REMOVED AND REPLACED.

BASEMENT DEMOLITION PLAN

REMOVE AND TEMPORARILY STORE TWO EXISTING EXHAUST LOUVERS.

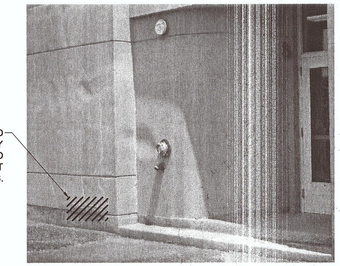

PHOTOGRAPH NO.1

TWO EXISTING EXHAUST LOUVERS SHALL BE REMOVED, TEMPORARILY STORED, AND REINSTALLED.

GENERAL NOTE

DEMOLITION PLANS DEVELOPED FROM 1994 DESIGN DRAWINGS. PLAN DEVELOPED FOR PURPOSES OF INDICATING EXISTING CONDITIONS AND SCOPE OF NEW WORK. THE CONTRACTOR SHALL FIELD VERIFY THE EXISTING CONDITIONS AS REQUIRED FOR THE NEW SCOPE OF WORK INDICATED.

DEMOLITION WORK NOTES

1. DEMOLITION NOTES SHALL APPLY TO ALL DEMOLITION DRAWINGS.
2. ALL PIPE AND DUCTWORK SIZES INDICATED ARE APPROXIMATE. CONTRACTOR SHALL FIELD VERIFY EXACT SIZES IN THE FIELD.
3. CONTRACTOR SHALL BE RESPONSIBLE FOR TEMPORARILY REMOVING CEILING TILES AND OTHER OBSTACLES, PROVIDING TEMPORARY WEATHER PROTECTION, STORAGE AND REINSTALLATION OF ITEMS REMOVED.
4. PROVIDE DEMOLITION OF EXISTING PTAC UNITS AND ASSOCIATED CONTROLS, CONTROL WIRING, WALL SLEEVE, LOUVER, AND SUBBASE, ETC. AS INDICATED. DISCONNECT HOT WATER COIL IN SUBBASE FROM PIPING IN ADJACENT ENCLOSURE.
5. PROVIDE DEMOLITION OF THERMOSTATS AND ASSOCIATED CONTROL WIRING TO PTAC UNITS AS INDICATED.
6. PROVIDE REMOVAL, TEMPORARY STORAGE, AND REINSTALLATION OF EXISTING CABINET UNIT HEATER (CUH) AS INDICATED. DISCONNECT HOT WATER PIPING FROM PIPING IN ADJACENT ENCLOSURE.
7. ALL EXISTING HVAC EQUIPMENT, DUCTWORK, PIPING, ETC. TO REMAIN UNLESS OTHERWISE NOTED.
8. PROVIDE ALL REQUIRED CUTTING AND PATCHING FOR WORK INDICATED. PATCHING SHALL BE PROVIDED FOR FLOORS, WALLS AND CEILINGS. PATCHING SHALL BE MADE WITH SIMILAR MATERIALS TO MATCH EXISTING CONDITIONS AND PAINTED TO MATCH ADJACENT SURFACES.
9. DEMOLITION OF HOT WATER PIPING SHALL BE AS INDICATED. PROVIDE ALL NECESSARY TEMPORARY OR PERMANENT CAPS OR PLUGS FOR PIPING. DO NOT LEAVE PIPING OPEN ENDED. PROVIDE BALL VALVES ON ALL PIPING TO BE RECONNECTED TO.
10. PROVIDE DRAINING AND REFILLING OF HWS AND HWR PIPING AS REQUIRED FOR DEMOLITION WORK.
11. CONTRACTOR SHALL REMOVE REFRIGERANT PIPING AS REQUIRED TO ALLOW FOR ARCHITECTURAL WORK. WORK SHALL ONLY BE DONE AT TIME OF ARCHITECTURAL WORK, COORDINATE WITH GC.
12. PROTECTION OF ALL EXISTING EQUIPMENT TO REMAIN SHALL BE DONE BY THE GC.

RDK ENGINEERS
Andover, MA - Boston, MA - Amherst, MA
Durham, NC - Charlotte, NC
RDK Engineers
200 Brickstone Square
Andover, MA 01810-1488
T. 978-296-6200

SYM	DESCRIPTION	DATE	APPR

NAVFAC

GREGORY J. TITTERINGTON No. 15870 REGISTERED PROFESSIONAL ENGINEER SEAL

GALE
Gale Associates, Inc.
Engineers Planners
163 LIBBEY PARKWAY
WEYMOUTH, MA 02189
P 781.335.6465
F 781.335.6467 www.gainc.com
Boston Baltimore Orlando San Francisco

GALE JN 824502 A/E INFO

APPROVED

FOR COMMANDER NAVFAC

ACTIVITY

SATISFACTORY TO DATE APRIL 12, 2013

DES	HH	DRW	DM	CHK	BO

<CPM/DM>>

BRANCH MANAGER

CHIEF ENG/ARCH

<<XXX>>

DEPARTMENT OF THE NAVY
NAVAL FACILITIES ENGINEERING COMMAND
NAVAL STATION NEWPORT, RI

EXTERIOR REPAIRS BUILDING 678 CODDINGTON POINT

HVAC BASEMENT DEMOLITION PLAN

SCALE: 1/8"=1'-0"

EPROJECT NO.: 1116160

CONSTR. CONTR. NO. N40085-11-D-7207-0502

NAVFAC DRAWING NO. 12642101

SHEET 40 OF 66

HD100

DRAWFORM REVISION: 10 MARCH 2009

FILE NAME: J:\2011\20110571 – Newport Naval Station Bldg 678 Electrical\HVAC\Plot Sheets\20110571 – HD100 HVAC BASEMENT DEMOLITION PLAN.dwg LAYOUT NAME: Work PLOTTED: Tuesday, April 09, 2013 – 3:48pm USER: fdeaza