PORTSMOUTH NAVAL SHIPYARD
KITTERY, ME

DRYDOCK #1 DEFUELING COMPLEX
VOLUME 1: SITE & FOUNDATIONS
CONTRACT NO. N40085-17-C-5002

LIST OF VOLUMES	
VOLUME:	TITLE:
1	SITE & FOUNDATIONS
2	M-140 COMPLEX
3	DRE-7
4	RAE-4 & RAE-SP-6
5	ACE-3
6	PASSAGEWAYS

DRAWING INDEX

DRAWING	TITLE	SHEET NUMBER
G-001	TITLE SHEET	1 OF 46
G-101	GENERAL CONDITIONS PLAN	2 OF 46
G-102	FUTURE SITE UTILITY PLAN (NO STORAGE ENCLOSURE/ANNEX)	3 OF 46
G-102A	FUTURE SITE UTILITY PLAN - FULL BUILD	4 OF 46
LS-001	LIFE SAFETY ABBREVIATIONS AND GENERAL NOTES	5 OF 46
LS-101	LIFE SAFETY SITE PLAN	6 OF 46
C-001	GENERAL NOTES, LEGEND, AND ABBREVIATIONS	7 OF 46
C-101	SITE DEMOLITION PLAN	8 OF 46
C-102	OVERALL SITE LAYOUT PLAN	9 OF 46
C-103	SITE LAYOUT PLAN	10 OF 46
C-104	SITE GRADING AND DRAINAGE PLAN	11 OF 46
C-501	EROSION AND SEDIMENTATION CONTROL PLAN	12 OF 46
C-502	SITE DETAILS	13 OF 46
F-001	FOUNDATION NOTES	14 OF 46
F-100	ACE-3 FOUNDATION PLAN	15 OF 46
F-101	ACE-3 SLAB PLAN	16 OF 46
F-102	DRE-7 FOUNDATION PLAN - WITHOUT STORAGE ENCLOSURE	17 OF 46
F-102A	DRE-7 FOUNDATION PLAN	18 OF 46
F-103	DRE-7 SLAB PLAN - WITHOUT STORAGE ENCLOSURE	19 OF 46
F-103A	DRE-7 SLAB PLAN	20 OF 46
F-104	M140 FOUNDATION PLAN	21 OF 46
F-105	M140 FOUNDATION PLAN - WITHOUT STORAGE ENCLOSURE	22 OF 46
F-105A	M140 FOUNDATION PLAN	23 OF 46
F-106	M140 SLAB PLAN	24 OF 46
F-107	M140 SLAB PLAN - WITHOUT STORAGE ENCLOSURE	25 OF 46
F-107A	M140 SLAB PLAN	26 OF 46
F-108	FOUNDATION PLAN PW-05 & PW-06 SUPPORT FRAME	27 OF 46
F-109	FOUNDATION PLAN - RAE SP-6 & RAE-4 STORAGE	28 OF 46
F-110	PW-09A & PW-9B SUPPORT FRAMING FOUNDATIONS	29 OF 46
F-501	TYPICAL FOUNDATION DETAILS	30 OF 46
F-502	FOUNDATION DETAILS	31 OF 46
F-503	FOUNDATION DETAILS	32 OF 46
F-504	FOUNDATION DETAILS	33 OF 46
F-505	FOUNDATION DETAILS	34 OF 46
F-506	FOUNDATION DETAILS	35 OF 46
F-507	FOUNDATION DETAILS	36 OF 46
F-508	FOUNDATION DETAILS	37 OF 46
F-509	TRACK DETAILS	38 OF 46
F-510	RAE SP-6 & RAE-4 STORAGE FNDN SECTIONS AND DETAILS	39 OF 46
F-511	M140 PIER AND PILE CAP DETAILS	40 OF 46
FA-101	FIRE ALARM SITE PLAN	41 OF 46
E-001	ELECTRICAL LEGEND, ABBREVIATIONS AND GENERAL NOTES	42 OF 46
E-101	ELECTRICAL SITE PLAN	43 OF 46
E-102	DEFUELING LOADHOUSE LAYOUT	44 OF 46
E-501	ELECTRICAL ONE-LINE DIAGRAM	45 OF 46
E-502	ELECTRICAL DETAILS	46 OF 46

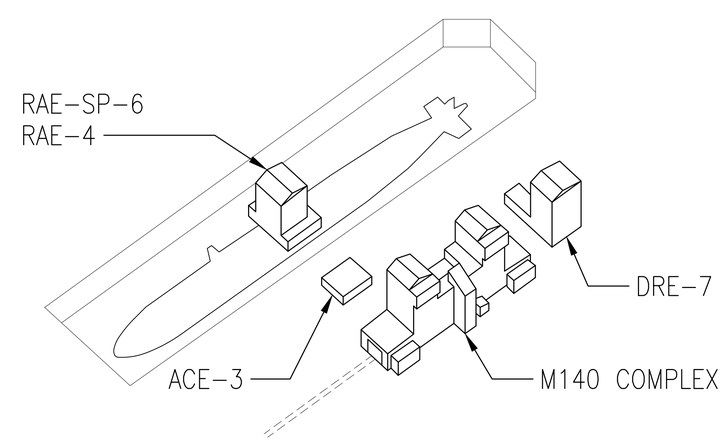

DD#1 SITE ISO DIAGRAM
SCALE: NTS

PLAN NORTH

SYM	DESCRIPTION	DATE	APPR
0	ISSUED FOR CONSTRUCTION	10/28/2016	CBC

STATE OF MAINE
CALEN B. COLBY
No. 6384
LICENSED
PROFESSIONAL ENGINEER
10/28/16

Colby Company engineering
A/E INFO

APPROVED
David W. Greenfield
FOR COMMANDER NAVFAC

ACTIVITY
TIM FISHER
C. 2370.6 BRANCH HEAD

SATISFACTORY TO DATE 10/28/2016
DES BCT DRW BVD CHK CBC
PMOM PETER STOCKLESS
BRANCH MANAGER IAN BODWELL
FEA/PM&E AMIN BAHROUR
FIRE PROTECTION PATRICK BAKAJ

DEPARTMENT OF THE NAVY
NAVAL FACILITIES ENGINEERING COMMAND
PUBLIC WORKS DEPARTMENT - MAINE
NAVAL FACILITIES ENGINEERING COMMAND ~ MID-ATLANTIC
NAVAL SHIPYARD - PORTSMOUTH, NH
PORTSMOUTH NAVAL SHIPYARD
DRY DOCK #1 DEFUELING COMPLEX
KITTERY, ME
SITE & FOUNDATIONS
TITLE SHEET

EPROJECT NO.: 1363311
CONSTR. CONTR. NO. N40085-17-C-5002
NAVFAC DRAWING NO. 12734738
SHEET 1 OF 46
G-001 DD1-16-819

DRAWFORM REVISION: 10 OCTOBER 2014

10/28/2016 7:41:56 AM X:\297 PORTSMOUTH NAVAL SHIPYARD\297.005.001 - DD#1 DEFUELING COMPLEX DESIGN\DRAWINGS\SITE - FOUNDATIONS\SHEETS\G-001.DWG

LEGEND:

- AREA AVAILABLE FOR USE UNTIL Q2 OF FY 18 FOR UNDOCKING. SPACE IS LIMITED TO UP WITHIN 5' OF CENTER OF PORTAL CRANE RAIL AND HEIGHT OF LAYDOWN/STORAGE LIMITED TO 45'.
- SPACE AVAILABLE UNTIL Q1 OF FY 18
- SPACE AVAILABLE UNTIL Q1 OF FY 18
- SPACE MAY BE AVAILABLE DEPENDING ON OTHER PROJECTS. TO BE COORDINATED DURING CONSTRUCTION ACTIVITIES AND SHOULD NOT BE CONSIDERED TO BE AVAILABLE DURING BIDDING.

NOTES: NAVY FISCAL QUARTERS START IN OCTOBER (Q1).

THIS CONDITIONS PLAN COULD CHANGE BASED ON OVERALL SCHEDULES FOR BOTH SHIPYARD AND OTHER PROJECTS, BUT SERVES AS A GENERAL GUIDELINE. CONTRACTOR SHALL COORDINATE WITH OTHER PROJECTS AND CONTRACTING OFFICER FOR LAYDOWN.

KEYED NOTES:

1. STORAGE AREA AVAILABLE AT BERTH #2B FOR CONTRACTOR PROVIDED BARGES.
2. APPROXIMATE LOCATION OF TEMPORARY POWER SOURCES.

GENERAL CONSTRUCTION NOTES:

1. CONTRACTOR SHALL PROTECT AND MAINTAIN GOVERNMENT ACCESS TO ALL FACILITIES, UTILITIES, AND CRANE RAILS WITHIN WORK AND LAYDOWN AREAS. SPACE IS LIMITED TO 5' OUTSIDE OF PORTAL RAIL TRACKS AND HEIGHT LIMITED TO 45'.
2. CONTRACTOR SHALL COORDINATE USE OF GATE #1 OR #2 FOR LARGE DELIVERIES WITH CONTRACTING OFFICER.
3. CONTRACTOR SHALL DEMONSTRATE FIT-UP OF PORTABLE ENCLOSURES PRIOR TO PROJECT COMPLETION. REFER TO SPECIFICATIONS FOR ADDITIONAL INFORMATION ON DEMONSTRATION AND INSPECTION REQUIREMENTS FOR PORTABLE ENCLOSURES.
4. THE CONTRACTOR SHALL COORDINATE OFF-SITE CONSTRUCTION AND SUBSEQUENT BARGING OF UNITS TO THE SHIPYARD WITH PNSY/NAVFAC.
5. USE OF PNSY CRANES SHALL NOT BE ALLOWED. ALL CRANES OFF SITE AND AT PNSY SHALL BE THE CONTRACTORS RESPONSIBILITY. ALL CRANE USE IS IN ACCORDANCE WITH THE REQUIREMENTS LISTED IN THE SPECIFICATIONS.
6. THE WORK SHALL BE COMPLETED IN THE CONTROLLED INDUSTRIAL AREA (CIA). THE CONTRACTOR SHALL BE AWARE OF ADDITIONAL SECURITY REQUIREMENTS AND WORK RESTRICTIONS IN THE AREA. COSTS INCURRED BY WORK DELAYS IN THE CIA WILL BE THE RESPONSIBILITY OF THE CONTRACTOR AND WILL NOT RESULT IN AN EQUITABLE ADJUSTMENT AS SPECIFIED IN THE SPECIFICATIONS.
7. THE ENTIRE BASE BID AREA (FORMER BUILDING 155 AREA) SHOWN ON THE SITE WILL BE AVAILABLE THROUGHOUT THE ENTIRE CONSTRUCTION PERIOD FOR SITE STORAGE AND LAYDOWN SPACE. ADDITIONAL LOCATIONS FOR LAYDOWN/STORAGE ON SITE DURING CERTAIN TIME PERIODS ARE INDICATED AS WELL. THE CONTRACTOR SHALL COORDINATE AND PROVIDE FIRE LANES DURING CONSTRUCTION. THE MINIMUM CURB TO CURB DISTANCE REQUIRED TO TURN FIRE TRUCKS IS 38 FEET.
8. EXCAVATION WILL OCCUR IN AREAS OF ARCHAEOLOGICAL SENSITIVITY. ARCHAEOLOGICAL MONITORING SHALL BE PROVIDED DURING ALL GROUND DISTURBING ACTIVITIES PER SPECIFICATION 01 44 00.22.

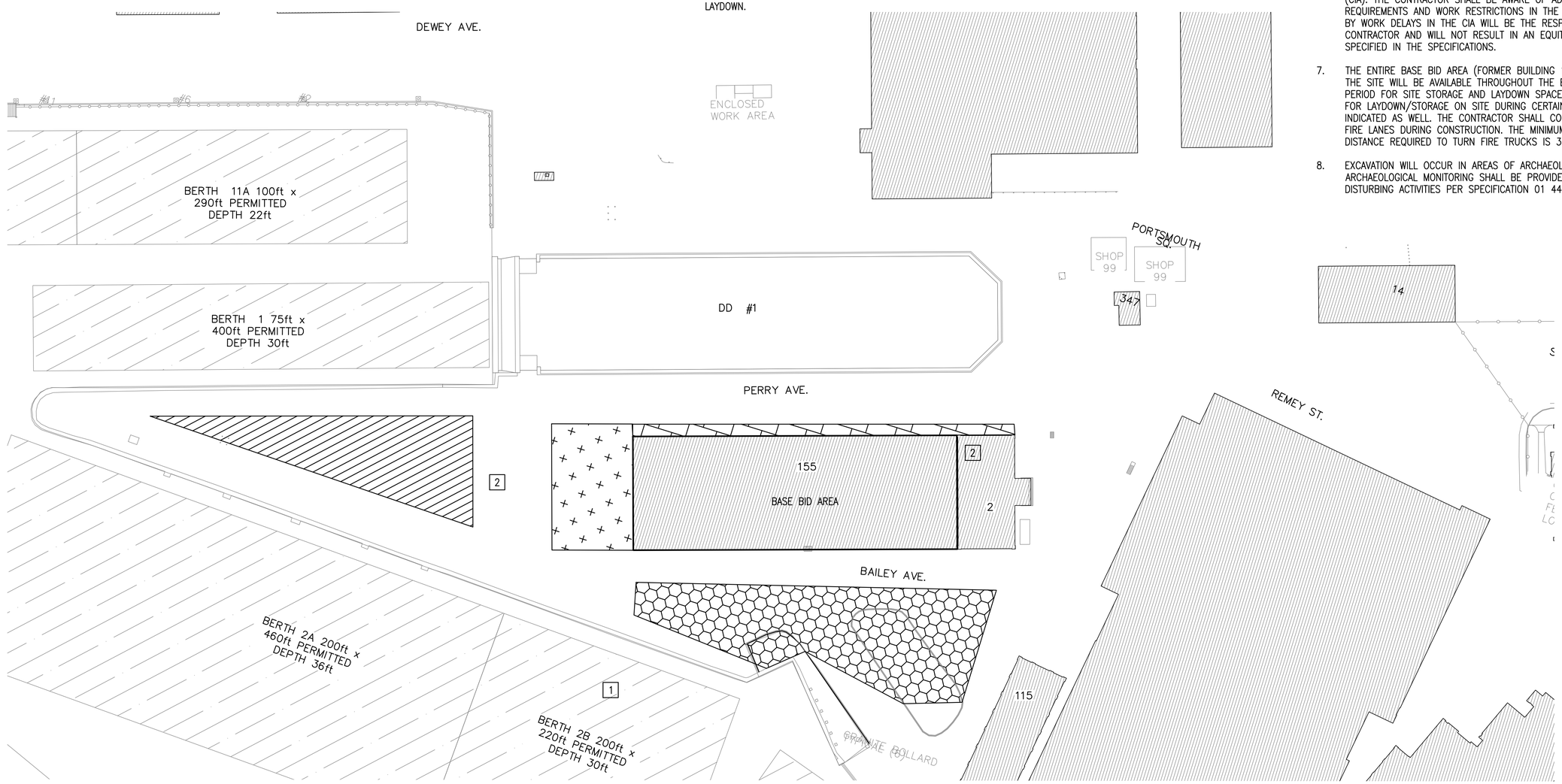

GENERAL CONDITIONS PLAN

SCALE: 1" = 50'

SYM	DESCRIPTION	DATE	APPR
0	ISSUED FOR CONSTRUCTION	10/28/2016	CBC

NAVFAC

STATE OF MAINE
BENJAMIN C. TOWNSEND
No.13287
LICENSED PROFESSIONAL ENGINEER
10/28/16
SEAL

Colby Company engineering

A/E INFO

APPROVED
David W. Grunfeld
FOR COMMANDER NAVFAC

ACTIVITY
TIM FISHER
C. 2370.6 BRANCH HEAD

SATISFACTORY TO DATE 10/28/2016

DES	BCT	DRW	BVD	CHK	CBC

PM/DM	PETER STOCKLESS
BRANCH MANAGER	IAN BODWELL
FEAD/PM&E	AMIN BAHROUR
FIRE PROTECTION	PATRICK BAKAJ

DEPARTMENT OF THE NAVY
NAVAL FACILITIES ENGINEERING COMMAND
PUBLIC WORKS DEPARTMENT - MAINE
NAVAL FACILITIES ENGINEERING COMMAND ~ MID-ATLANTIC
NAVAL SHIPYARD - PORTSMOUTH, NH
PORTSMOUTH NAVAL SHIPYARD
KITTERY, ME
DRY DOCK #1 DEFUELING COMPLEX
SITE & FOUNDATIONS
GENERAL CONDITIONS PLAN

EPROJECT NO.: 1363311

CONSTR. CONTR. NO.
N40085-17-C-5002

NAVFAC DRAWING NO.
12734739

SHEET 2 OF 46

G-101 | DD1-16-820

DRAWFORM REVISION: 10 OCTOBER 2014

10/28/2016 7:42:16 AM X:\297 PORTSMOUTH NAVAL SHIPYARD\297.005.001 - DD#1 DEFUELING COMPLEX DESIGN\DRAWINGS\SITE - FOUNDATIONS\SHEETS\G-101.DWG

NOTES:

1. THIS SHEET DEPICTS THE SITE PLAN FOR THE BASE BID.
2. GROUNDING PLANS FOR EACH ENCLOSURE SHALL BE COORDINATED WITH FOUNDATION/SLAB PLACEMENT. GROUNDING DIAGRAMS INCLUDED IN EACH ENCLOSURE ELECTRICAL DRAWINGS.

KEYED NOTES:

1. DISTANCE IS THE MINIMUM CLEAR DISTANCE BETWEEN THE PASSAGEWAYS AND M-140 ENCLOSURE REQUIRED TO SUPPORT FUTURE INSTALLATION OF STAGING FOR SHIPYARD OPERATIONS.

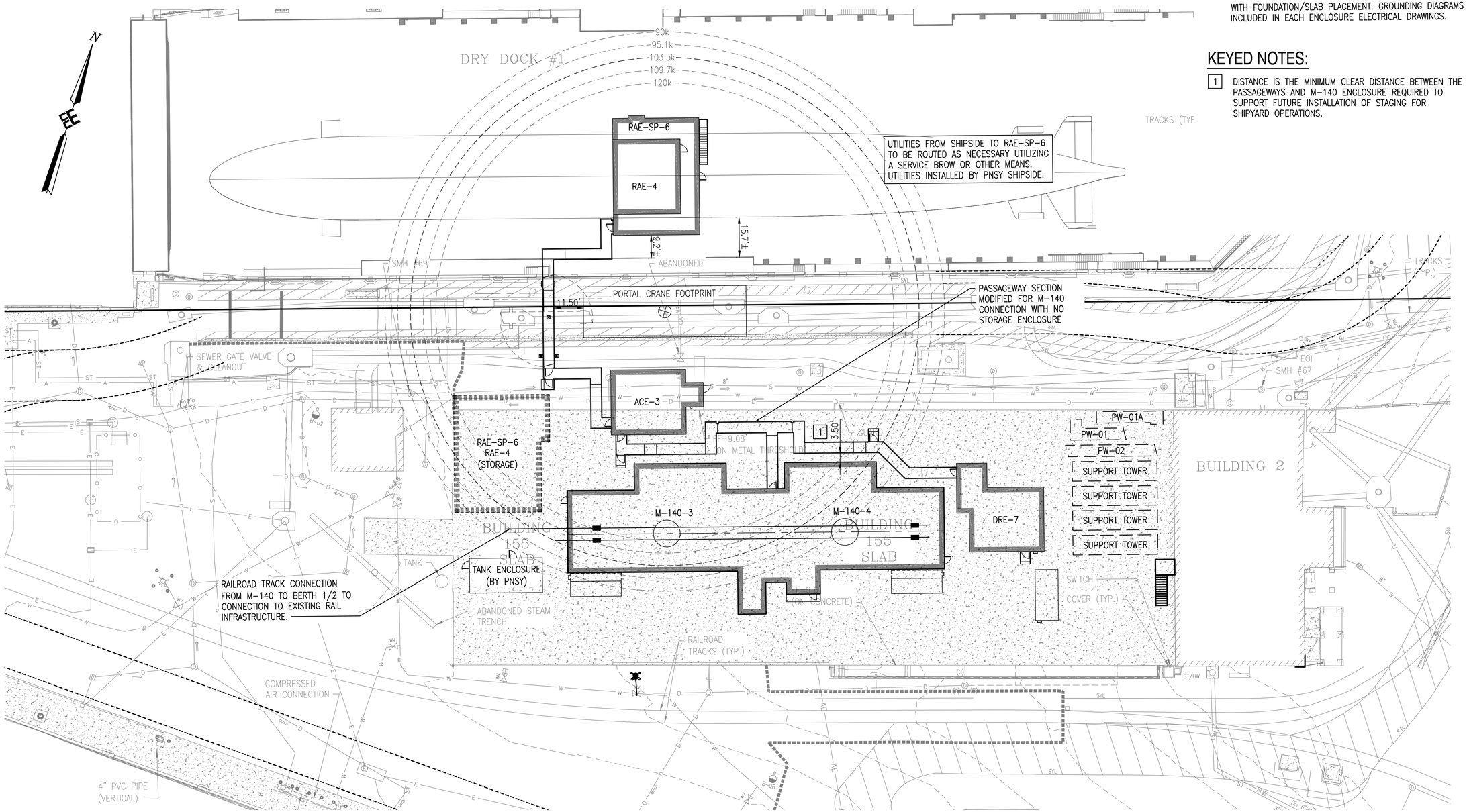

FUTURE SITE UTILITY PLAN - NO STORAGE ANNEX/STORAGE VESTIBULE

SCALE: 1" = 20'

0 20' 40'
Scale: 1" = 20'-0"

SYM	DESCRIPTION	DATE	APPR
0	ISSUED FOR CONSTRUCTION	10/28/2016	CBC

NAVFAC

STATE OF MAINE
BENJAMIN C. TOWNSEND
No. 13287
LICENSED PROFESSIONAL ENGINEER
10/28/16
SEAL

Colby Company engineering
A/E INFO

APPROVED
David W. Grunfeld
FOR COMMANDER NAVFAC

ACTIVITY
TIM FISHER
C. 2370.6 BRANCH HEAD

SATISFACTORY TO: DATE 10/28/2016
DES BCT DRW BVD CHK CBC
PMOM PETER STOCKLESS
BRANCH MANAGER IAN BODWELL
FEA/PM&E AMIN BAHROUR
FIRE PROTECTION PATRICK BAKAJ

DEPARTMENT OF THE NAVY
NAVAL FACILITIES ENGINEERING COMMAND
PUBLIC WORKS DEPARTMENT - MAINE
NAVAL FACILITIES ENGINEERING COMMAND ~ MID-ATLANTIC
NAVAL SHIPYARD - PORTSMOUTH, NH
PORTSMOUTH NAVAL SHIPYARD
KITTERY, ME
DRY DOCK #1 DEFUELING COMPLEX
SITE & FOUNDATIONS
FUTURE SITE UTILITY PLAN (NO STORAGE ENCLOSURE/ANNEX)

EPROJECT NO.: 1363311
CONSTR. CONTR. NO. N40085-17-C-5002
NAVFAC DRAWING NO. 12734740
SHEET 3 OF 46
G-102 DD1-16-821

DRAWFORM REVISION: 10 OCTOBER 2014

10/28/2016 7:43:27 AM X:\297 PORTSMOUTH NAVAL SHIPYARD\297.005.001 - DD#1 DEFUELING COMPLEX DESIGN\DRAWINGS\SITE - FOUNDATIONS\SHEETS\G-102.DWG

NOTES:

1. THIS SHEET DEPICTS THE SITE PLAN FOR THE FULL BUILD.
2. GROUNDING PLANS FOR EACH ENCLOSURE SHALL BE COORDINATED WITH FOUNDATION/SLAB PLACEMENT. GROUNDING DIAGRAMS INCLUDED IN EACH ENCLOSURE ELECTRICAL DRAWINGS.

KEYED NOTES:

1 DISTANCE IS THE MINIMUM CLEAR DISTANCE BETWEEN THE PASSAGEWAYS AND M-140 ENCLOSURE REQUIRED TO SUPPORT FUTURE INSTALLATION OF STAGING FOR SHIPYARD OPERATIONS.

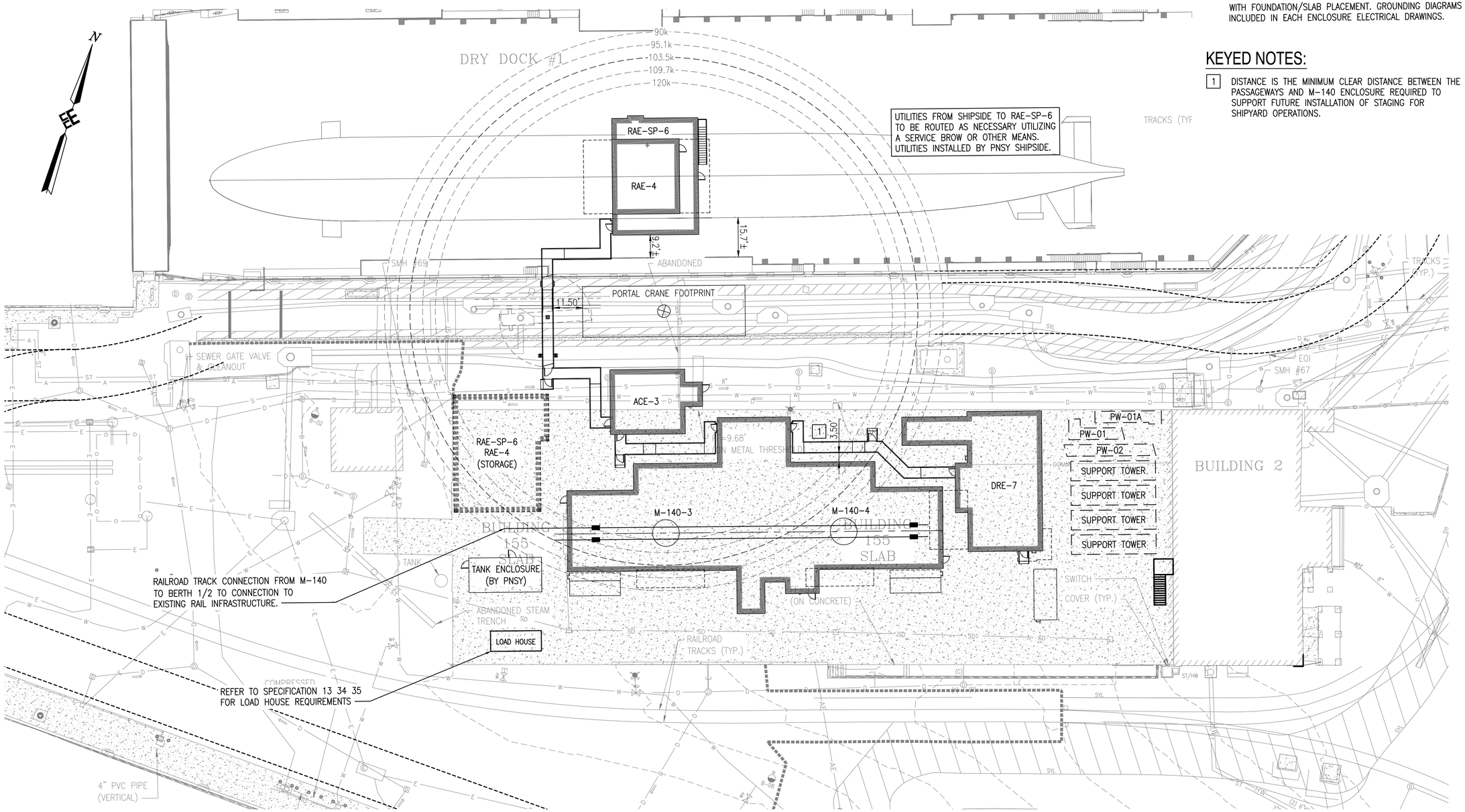

FUTURE SITE UTILITY PLAN

SCALE: 1" = 20'

0 20' 40'
Scale: 1" = 20'-0"

SYM	DESCRIPTION	DATE	APPR
0	ISSUED FOR CONSTRUCTION	10/28/2016	CBC

NAVFAC

STATE OF MAINE
BENJAMIN C. TOWNSEND
No. 13287
LICENSED PROFESSIONAL ENGINEER
10/28/16
SEAL

Colby Company engineering
A/E INFO

APPROVED
David W. Grunfeld
FOR COMMANDER NAVFAC

ACTIVITY
TIM FISHER
C. 2370.6 BRANCH HEAD

SATISFACTORY TO DATE 10/28/2016

DES	BCT	DRW BVD	CHK CBC

PMDM PETER STOCKLESS
BRANCH MANAGER IAN BODWELL
FEAD/PM&E AMIN BAHROUR
FIRE PROTECTION PATRICK BAKAJ

DEPARTMENT OF THE NAVY
NAVAL FACILITIES ENGINEERING COMMAND
PUBLIC WORKS DEPARTMENT - MAINE

NAVAL FACILITIES ENGINEERING COMMAND ~ MID-ATLANTIC
NAVAL SHIPYARD - PORTSMOUTH, NH

PORTSMOUTH NAVAL SHIPYARD
KITTERY, ME

DRY DOCK #1 DEFUELING COMPLEX
SITE & FOUNDATIONS

FUTURE SITE UTILITY PLAN - FULL BUILD

EPROJECT NO.: 1363311

CONSTR. CONTR. NO.
N40085-17-C-5002

NAVFAC DRAWING NO.
12734741

SHEET 4 OF 46

G-102A | DD1-16-822

DRAWFORM REVISION: 10 OCTOBER 2014

10/28/2016 7:44:44 AM X:\297 PORTSMOUTH NAVAL SHIPYARD\297.005.001 - DD#1 DEFUELING COMPLEX DESIGN\DRAWINGS\SITE - FOUNDATIONS\SHEETS\G-102A.DWG

GENERAL NOTES

1. THE FOLLOWING DRAWING, LS-101, APPLIES TO THE SITE CODE COMPLIANCE SUMMARY. REFER TO INDIVIDUAL ENCLOSURE DRAWING PACKAGES FOR INFORMATION REGARDING EACH ENCLOSURE'S INTERIOR LIFE SAFETY DESIGN.
2. THE AUTHORITY HAVING JURISDICTION (AHJ) FOR FIRE PROTECTION AND LIFE SAFETY ON THIS PROJECT WILL BE THE ASSIGNED FIRE PROTECTION ENGINEER FROM NAVFAC MIDLANT.
3. DD#1 ENCLOSURES INDICATED ON SHEET FA-101 SHALL BE EQUIPPED WITH A FIRE ALARM SYSTEM.
4. THE DD#1 ENCLOSURES WILL BE USED PRIMARILY FOR RADIOLOGICAL PURPOSES. PNSY DIRECTIVES AND RADIOLOGICAL STANDARDS TAKE THE HIGHEST PRECEDENCE IN DETERMINING THE ENCLOSURE DESIGN REQUIREMENTS, FOLLOWED BY UFC 3-600-10N (FINAL DRAFT) AND UFC 3-600-01.

PNSY DIRECTIVES

1. DD#1 DEFUELING ENCLOSURES SHALL NOT INCORPORATE SPRINKLER PROTECTION DUE TO RADIOLOGICAL CONTROL CONSIDERATIONS.
2. FIRE EXTINGUISHERS IN ENCLOSURES SHALL BE ABC DRY CHEMICAL TYPE, SUPPLIED AND INSTALLED BY PNSY, AND SHALL MEET NFPA 10 STANDARDS.
3. MINIMAL FLAMMABLE AND COMBUSTIBLE MATERIALS WILL BE STORED AND USED IN THE ENCLOSURES AND THE ENCLOSURES DO NOT CONSTITUTE A GROUP H HIGH HAZARD OCCUPANCY PER IBC OR NFPA DEFINITIONS.
4. PNSY STANDARDS AND PROTOCOL FOR HOT WORK SHALL APPLY WHEN HOT WORK IS PERFORMED INSIDE ANY OF THE ENCLOSURES.
5. AREAS WITHIN CONTROL BOUNDARIES WILL BE USED FOR RADIOLOGICAL PURPOSES AND SHALL BE CONSTRUCTED SO AS TO MINIMIZE CRACKS AND CREVICES. IN ADDITION, THESE AREAS SHALL BE CONSTRUCTED WITH CLEANLINESS AND CAPTIVATION IN MIND, WITH SELF-LOCKING FASTENERS USED AS MUCH AS PRACTICAL.

UFC 3-600-01 - FIRE PROTECTION ENGINEERING FOR FACILITIES, 2013

1. THIS UFC STANDARD REFERENCES THE FOLLOWING DOCUMENTS:
   - 1.1. NFPA 1: FIRE LANE DIMENSIONS
   - 1.2. NFPA 10: FIRE EXTINGUISHERS (TO BE LOCATED, PROVIDED, AND INSTALLED BY PNSY)
   - 1.3. NFPA 72: FIRE ALARM
   - 1.4. NFPA 101: EGRESS AND LIFE SAFETY
   - 1.5. IBC: OCCUPANCY CLASSIFICATION, BUILDING CONSTRUCTION, ALLOWABLE AREAS AND HEIGHTS
2. TABLE C-1, HYDRANT FLOW RATE REQUIREMENTS: 1,500 GPM AT 20 PSI
   - 2.1. UP TO 1,250 GPM CAN COME FROM A SINGLE HYDRANT.
   - 2.2. THE DESIGN TEAM WAS NOT ABLE TO PERFORM A HYDRANT FLOW TEST WITHIN THE DESIGN PERIOD DUE TO ACTIVE ON-GOING OPERATIONS. A FLOW TEST WILL BE CONDUCTED BY THE TEAM PRIOR TO PROJECT CONSTRUCTION AND RESULTS WILL BE SUBMITTED IN AN ADDENDUM.
   - 2.3. BASED ON CURRENT DATA FROM PNSY, HYDRANT #37 HAS A FLOW RATE OVER 1,000 GPM AT A RESIDUAL PRESSURE OF APPROXIMATELY 60 PSI. TWO NEW HYDRANTS ARE PROPOSED ADJACENT TO THE M-140 COMPLEX AND ACE-3. SEE SHEET LS-101. IT IS ANTICIPATED THAT THE SYSTEM WILL BE CAPABLE OF PROVIDING THE DESIGN HYDRANT FLOW RATE AND THIS WILL BE ADDRESSED IN A SEPARATE ADDENDUM.
   - 2.4. HYDRANTS #35 AND #37 ARE NOT BOTH WITHIN 350 FEET OF ALL ENCLOSURES SO TWO NEW HYDRANT WILL BE INSTALLED (BY OTHERS) ON THE SOUTH SIDE OF THE M-140 COMPLEX AND ADJACENT TO THE ACE-3 PRIOR TO THE START OF THIS PROJECT IN ORDER TO MEET HOSE LAYDOWN REQUIREMENTS.

NFPA 1 - FIRE CODE, 2012

1. A FIRE LANE IS SHOWN THROUGHOUT THE NEW DD#1 DEFUELING COMPLEX FOR FIRE DEPARTMENT ACCESS.
2. 8.2.3.2.1: FIRE DEPARTMENT ACCESS ROAD IS WITHIN 50 FEET OF AT LEAST ONE EXTERIOR WALL FOR EVERY ENCLOSURE.
3. 8.2.3.2.2: FIRE DEPARTMENT ACCESS ROAD IS WITHIN 150 FEET OF ANY EXTERIOR WALL FOR EVERY ENCLOSURE.
4. 18.2.3.4: FIRE DEPARTMENT ACCESS ROAD HAS AN UNOBSTRUCTED WIDTH OF AT LEAST 20 FEET AND A VERTICAL CLEARANCE OF AT LEAST 13.5 FEET.

ABBREVIATIONS

AFF	ABOVE FINISHED FLOOR
AFG	ABOVE FINISHED GRADE
AHJ	AUTHORITY HAVING JURISDICTION
BFG	BELOW FINISHED GRADE
BLDG	BUILDING
CLG	CEILING
CO2	CARBON DIOXIDE
DB	DIRECT BURIED
DISC	DISCONNECT
DN	DOWN
EQP	EQUIPMENT
EXIST	EXISTING
FAA	FIRE ALARM ANNUNCIATOR
FACP	FIRE ALARM CONTROL PANEL
FBO	FURNISHED BY OTHERS
FFE	FINAL FOUNDATION ELEVATION
FLR	FLOOR
GEN	GENERATOR
GND	GROUND
IBC	INTERNATIONAL BUILDING CODE
MAX	MAXIMUM
MFR	MANUFACTURER
NC	NORMALLY CLOSED
NIC	NOT IN CONTRACT
NEC	NATIONAL ELECTRIC CODE
NEG	NEGATIVE
NFPA	NATIONAL FIRE PROTECTION ASSOCIATION
NIC	NOT IN CONTRACT
NTS	NOT TO SCALE
PNSY	PORTSMOUTH NAVAL SHIPYARD
RFP	REQUEST FOR PROPOSAL
RM	ROOM
UFC	UNIFIED FACILITIES CRITERIA

SYM	DESCRIPTION	DATE	APPR
0	ISSUED FOR CONSTRUCTION	10/28/2016	CBC

NAVFAC

STATE OF MAINE
EMILY PINYARD
No. 12126
LICENSED
PROFESSIONAL ENGINEER
10/28/16
SEAL

Colby Company engineering
A/E INFO

APPROVED
David W. Greenfield
FOR COMMANDER NAVFAC

ACTIVITY
TIM FISHER
C. 2370.6 BRANCH HEAD

SATISFACTORY TO DATE 10/28/2016
DES ERP DRW CSS CHK WEP
PMOM PETER STOCKLESS
BRANCH MANAGER IAN BODWELL
FEA/PM&E AMIN BAHROUR
FIRE PROTECTION PATRICK BAKAJ

DEPARTMENT OF THE NAVY
NAVAL FACILITIES ENGINEERING COMMAND
PUBLIC WORKS DEPARTMENT - MAINE
NAVAL FACILITIES ENGINEERING COMMAND ~ MID-ATLANTIC
NAVAL SHIPYARD - PORTSMOUTH, NH
PORTSMOUTH NAVAL SHIPYARD
KITTERY, ME
DRY DOCK #1 DEFUELING COMPLEX
SITE & FOUNDATIONS
LIFE SAFETY ABBREVIATIONS AND GENERAL NOTES

EPROJECT NO.: 1363311
CONSTR. CONTR. NO. N40085-17-C-5002
NAVFAC DRAWING NO. 12734742
SHEET 5 OF 46
LS-001 DD1-16-823

DRAWFORM REVISION: 10 OCTOBER 2014

10/28/2016 7:44:54 AM X:\297 PORTSMOUTH NAVAL SHIPYARD\297.005.001 - DD#1 DEFUELING COMPLEX DESIGN\DRAWINGS\SITE - FOUNDATIONS\SHEETS\LS-001.DWG

KEYED NOTES

1. ELEVATED PASSAGEWAY TO LEVEL 1 OF M-140
2. PASSAGEWAY SHALL BE SEPARATED FROM ENCLOSURE BY A STRUCTURALLY INDEPENDENT TWO HOUR FIRE BARRIER PER IBC SECTION 3104.5.1.1
3. PORTABLE ENCLOSURE FOR PUMP-DOWN TANK (BY PNSY) TO BE LOCATED AT LEAST 10 FEET FROM THE M-140 COMPLEX AND ALL OTHER ENCLOSURES.
4. EXTERIOR WALL SHALL BE FIRE-RATED DUE TO PROXIMITY (LESS THAN 10 FOOT SEPARATION) FROM ANOTHER ENCLOSURE.

NOTES

1. FIRE ALARM CONTROL PANEL (FACP) TO BE LOCATED IN THE ACE-3 ENCLOSURE. REMOTE ANNUNCIATOR TO BE LOCATED OUTSIDE OF THE ACE-3 ENTRANCE FOR FIRE DEPARTMENT USE.
2. ABC DRY CHEMICAL FIRE EXTINGUISHERS SHALL BE SUPPLIED AND LOCATED THROUGHOUT ENCLOSURES BY PNSY TO MEET NFPA 10 REQUIREMENTS.
3. HOSE LAYDOWN DISTANCES NOTED ARE FROM THE HYDRANT TO THE MOST REMOTE EXTERIOR WALL OF THE REFERENCED ENCLOSURE. IF A FIXED PASSAGEWAY OBSTRUCTS ACCESS TO THE EXTERIOR WALL, THE HOSE LENGTH ACCOUNTS FOR THE ADDITIONAL TRAVEL DISTANCE TO AVOID THE PASSAGEWAY.
4. FIRE LANE SHALL BE KEPT FREE OF PARKED VEHICLES, EQUIPMENT, AND STORED MATERIALS.

LEGEND

— —2HR— — TWO HOUR FIRE BARRIER

PASSAGEWAY

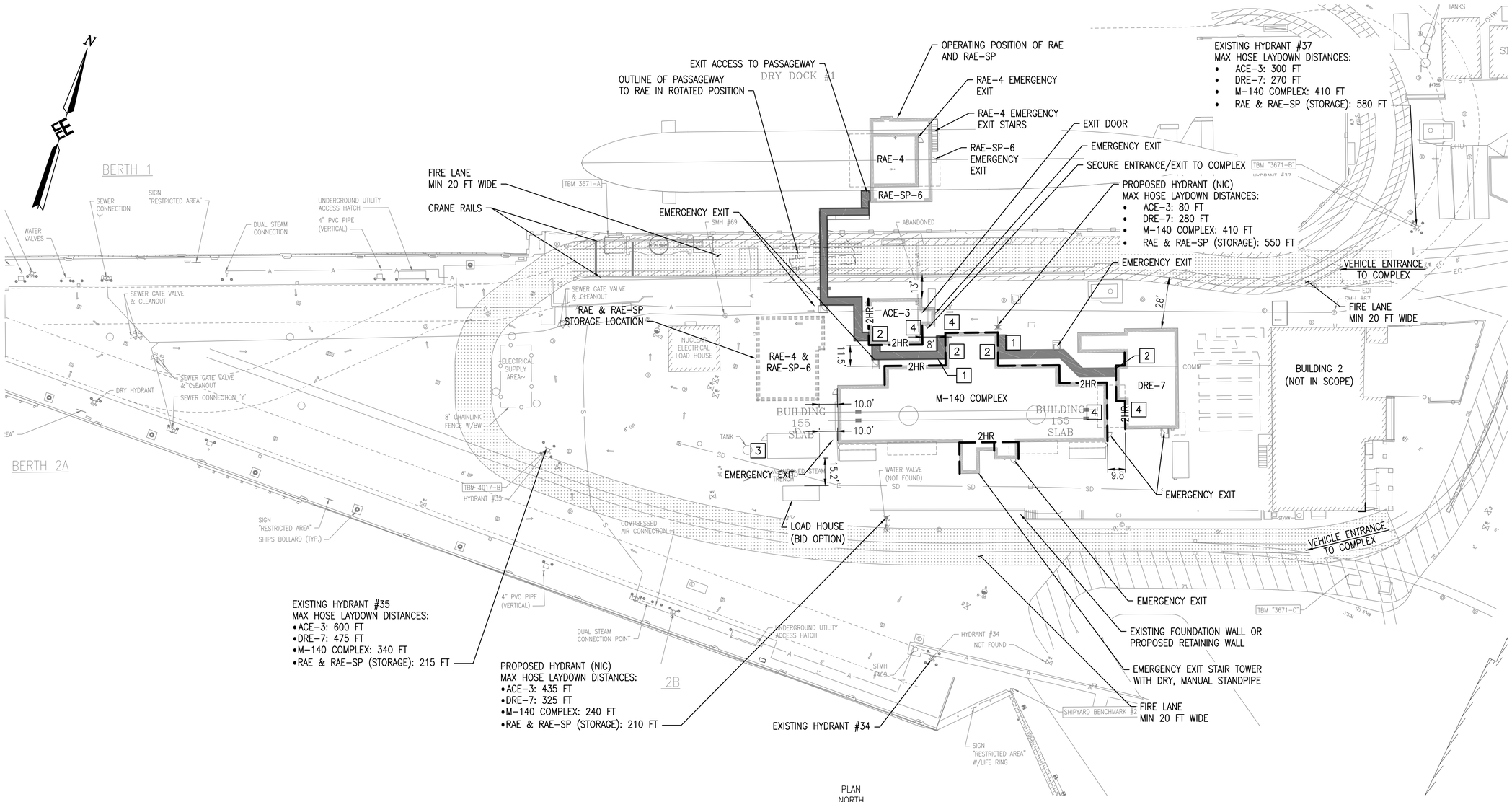

LIFE SAFETY SITE PLAN

SCALE: 1' = 30'

PLAN NORTH

SYM	DESCRIPTION	DATE	APPR
0	ISSUED FOR CONSTRUCTION	10/28/2016	CBC

NAVFAC

STATE OF MAINE — EMILY PINYARD No. 12126 — LICENSED PROFESSIONAL ENGINEER — 10/28/16 — SEAL

Colby Company engineering — A/E INFO

APPROVED: David W. Grunfeld
FOR COMMANDER NAVFAC

ACTIVITY: TIM FISHER, C. 2370.6 BRANCH HEAD
SATISFACTORY TO DATE 10/28/2016

DES	ERP	DRW	CSS	CHK	WEP

PMDM: PETER STOCKLESS
BRANCH MANAGER: IAN BODWELL
FEAD/PM&E: AMIN BAHROUR
FIRE PROTECTION: PATRICK BAKAJ

DEPARTMENT OF THE NAVY
NAVAL FACILITIES ENGINEERING COMMAND
PUBLIC WORKS DEPARTMENT - MAINE
NAVAL FACILITIES ENGINEERING COMMAND ~ MID-ATLANTIC
NAVAL SHIPYARD - PORTSMOUTH, NH
PORTSMOUTH NAVAL SHIPYARD
KITTERY, ME
DRY DOCK #1 DEFUELING COMPLEX
SITE & FOUNDATIONS
LIFE SAFETY SITE PLAN

EPROJECT NO.: 1363311
CONSTR. CONTR. NO. N40085-17-C-5002
NAVFAC DRAWING NO. 12734743
SHEET 6 OF 46
LS-101 | DD1-16-824

DRAWFORM REVISION: 10 OCTOBER 2014

10/28/2016 7:45:26 AM X:\297 PORTSMOUTH NAVAL SHIPYARD\297.005.001 - DD#1 DEFUELING COMPLEX DESIGN\DRAWINGS\SITE - FOUNDATIONS\SHEETS\LS-101.DWG

LEGEND

EXISTING		PROPOSED
	ELEC. OUTLET BANK	
	VALVE (TYPE UNKNOWN)	
	ELECTRIC BOX	
	CATCH BASIN (ROUND)	
	CATCH BASIN (SQUARE)	
	DRAIN MANHOLE	
	ELECTRIC MANHOLE	
	SEWER MANHOLE	
	STEAM MANHOLE	
	MANHOLE	
	CAPPED LINE	
	HYDRANT	
	WATER VALVE	
	CLEANOUT	
	ELECTRICAL HANDHOLE	
	POST INDICATOR VALVE	
	BOLLARD	
	NEW JERSEY BARRIER	
	GRANITE POST	
	FLOW DIRECTION ARROW	
	BORING	
	CONCRETE	
	METAL GRATE	
106.1'×	SPOT ELEVATION	108.1'×
SYL	SINGLE YELLOW PAINTED LINE	SYL
CONC.	CONCRETE	CONC.
S	SEWER LINE	S
D	DRAIN LINE	D
U	UNDERGROUND OIL LINE	U
W	WATER LINE	W
E	UNDERGROUND ELECTRIC LINE	E
OHU	OVERHEAD UTILITY LINE	OHU
AE	ABANDONED UNDERGROUND ELECTRIC	
A	COMPRESSED AIR	A
	OVERHANG	
	CONDENSATE RETURN	CR
	BITUMINOUS PAVEMENT	
	BUILDING	
	CHAIN LINK FENCE	
	STORM WATER FLOW	

GENERAL NOTES

1. THE DATA PROVIDED ON THESE DRAWINGS WAS DERIVED FROM THE FOLLOWING SOURCES:
   A. PNS TOTAL MAP: THESE DRAWINGS ARE AN ACCUMULATION OF DATA FROM PAST PROJECTS BASED ON DESIGN DRAWINGS, AS-BUILT DRAWINGS, FIELD OBSERVATIONS AND LOCAL KNOWLEDGE.
   B. REED & REED RECORD DRAWINGS FOR PROJECT 'STRUCTURAL STABILIZATION AND REPAIRS TO BERTHS 1, 2A, AND 2B', CONTRACT N40085-12-C-1736, CIRCA AUGUST, 2014.
   C. OAK POINT ASSOCIATES DESIGN DRAWINGS FOR PROJECT 'P266 STRUCTURAL SHOPS CONSOLIDATION', CONTRACT N40085-14-R-3507, CIRCA OCTOBER 2013. WORK SCOPE FOR THIS PROJECT HAS NOT BEEN PERFORMED AS OF THE DATE OF ISSUANCE OF THESE DRAWINGS; THE DATA PROVIDED IS TO BE CONSIDERED A FUTURE AS-BUILT CONDITION.
   D. UTILITY LOCATION SURVEYS PERFORMED ON BEHALF OF COLBY CO. ENGINEERING, SPRING/SUMMER 2016.

   FIELD CONDITIONS MAY VARY FROM THE DATA PROVIDED. THE CONTRACTOR SHALL VERIFY THE LOCATION OF ALL UTILITIES PRIOR TO STARTING WORK IN ACCORDANCE WITH PNS REQUIREMENTS. THE CONTRACTOR SHALL NOTE ALL DISCREPANCIES FOUND AND INCLUDE THIS DATA ON THE AS-BUILT DRAWINGS. THE CONTRACTOR SHALL SURVEY AND PHOTO DOCUMENT THE LOCATION OF ALL UTILITIES WHICH ARE NOT FOUND TO BE AS SHOWN ON THESE DRAWINGS.
2. THE CONTRACTOR SHALL BE RESPONSIBLE FOR PROVIDING ALL FIELD LAYOUT. THE CONTRACTOR SHALL MAKE TIES TO ALL UTILITY CONNECTIONS AND PROVIDE RECORD DRAWINGS FOR ALL UTILITIES SHOWING TIES TO CONNECTIONS, BENDS, VALVES, LENGTHS OF LINES AND INVERTS. AS-BUILT DOCUMENTATION SHALL BE IN AUTOCAD FORMAT.
3. THE CONTRACTING OFFICER SHALL BE NOTIFIED IN WRITING OF ANY CONDITIONS THAT VARY FROM THOSE SHOWN ON THE PLANS. THE CONTRACTOR'S WORK SHALL NOT VARY FROM THE PLANS WITHOUT THE EXPRESSED APPROVAL FROM THE CONTRACTING OFFICER.
4. THE CONTRACTOR IS INSTRUCTED TO COOPERATE WITH ANY AND ALL OTHER CONTRACTORS PERFORMING WORK ON THIS JOB SITE DURING THE PERFORMANCE OF THIS CONTRACT. UNRESOLVED CONFLICTS SHALL BE BROUGHT TO THE ATTENTION OF THE CONTRACTING OFFICER.
5. THE CONTRACTOR SHALL RESTORE PAVEMENTS, CULVERTS, SIGNS AND OTHER PROPERTY DAMAGED OR REMOVED TO PRE-CONSTRUCTION CONDITION AS DETERMINED BY THE CONTRACTING OFFICER.
6. THE CONTRACTOR SHALL COMPLY WITH ALL REQUIRED PERMITS.
7. THE CONTRACTOR SHALL BE RESPONSIBLE FOR OBTAINING, AND INCURRING THE COST OF ALL REQUIRED PERMITS, INSPECTIONS, CERTIFICATES.
8. IT IS THE CONTRACTOR'S RESPONSIBILITY TO EXAMINE ALL PLAN SHEETS AND SPECIFICATIONS, AND COORDINATE WORK WITH ALL CONTRACTS FOR THE SITE.
9. THE CONTRACTOR SHALL BE RESPONSIBLE TO CONDUCT EXPLORATORY TEST PITS AS SHOWN AND AS MAY BE REQUIRED TO DETERMINE UNDERGROUND CONDITIONS.
10. ALL TRENCH EXCAVATION AND ANY REQUIRED SHEETING AND SHORING SHALL BE DONE IN ACCORDANCE WITH THE LATEST O.S.H.A. AND NAVY CEC REGULATIONS FOR CONSTRUCTION.
11. THE CONTRACTOR SHALL BE RESPONSIBLE FOR THE MAINTENANCE OF SURFACE DRAINAGE DURING THE COURSE OF WORK.
12. THE CONTRACTOR SHALL GRADE ALL AREAS ON THE SITE TO PROVIDE POSITIVE DRAINAGE AS SHOWN ON C-104.
13. EXCAVATION WILL OCCUR IN AREAS OF ARCHAEOLOGICAL SENSITIVITY. ARCHAEOLOGICAL MONITORING SHALL BE PROVIDED DURING ALL GROUND DISTURBING ACTIVITIES. IF POTENTIALLY SIGNIFICANT ARTIFACTS ARE ENCOUNTERED STOP ALL WORK IN THE IMMEDIATE VICINITY AND CONTACT THE CONTRACTING OFFICER. DO NOT RESUME WORK UNTIL SO DIRECTED BY THE CONTRACTING OFFICER.
14. THE CONTRACTOR SHALL COORDINATE WITH NAVFAC AND PNSY TO OBTAIN SAMPLES OF NEW/EXISTING SOIL AND CONCRETE FOR BASELINE RADIOLOGICAL TESTING. REFER TO THE SPECIFICATIONS FOR ADDITIONAL INFORMATION.

UTILITY NOTES

1. EXISTING UTILITIES SHOWN ON THE PROJECT DRAWINGS ARE LOCATED APPROXIMATELY AND SHALL BE FIELD VERIFIED BY THE CONTRACTOR PRIOR TO CONSTRUCTION. UTILITY LOCATIONS ARE BASED ON PHYSICAL LOCATIONS AND DRAWINGS PROVIDED BY PORTSMOUTH NAVAL SHIPYARD. THE CONTRACTOR SHALL FIELD VERIFY ALL UTILITIES PRIOR TO CONSTRUCTION. THE CONTRACTOR SHALL BE RESPONSIBLE FOR THE REPAIRS OF ALL DISTURBED UTILITIES DURING CONSTRUCTION AT NO COST TO THE GOVERNMENT.
2. THE CONTRACTOR SHALL ARRANGE AND COORDINATE WITH THE GOVERNMENT FOR TEMPORARY UTILITY CONNECTIONS THAT MAY BE REQUIRED DURING CONSTRUCTION.
3. EXISTING UTILITIES TO REMAIN IN OPERATION SHALL BE PROTECTED FROM DAMAGE BY THE CONTRACTOR. ANY DAMAGE TO EXISTING UTILITIES TO REMAIN SHALL BE REPAIRED BY THE CONTRACTOR AT NO COST TO THE GOVERNMENT.
4. THE CONTRACTOR IS RESPONSIBLE FOR CALLING DIG-SAFE 72 HOURS PRIOR TO COMMENCEMENT OF CONSTRUCTION. THE CONTRACTOR IS RESPONSIBLE FOR LOCATING PRIVATELY OWNED UTILITIES ON SITE. COST FOR LOCATING UTILITIES WITHIN THE PROJECT AREA IS AT CONTRACTOR'S EXPENSE.
5. CONTRACTOR SHALL OBTAIN AN EXCAVATION PERMIT FROM THE SHIPYARD PRIOR TO ANY EXCAVATION.
6. CONTRACTOR SHALL PROVIDE HORIZONTAL AND VERTICAL LOCATIONS OF UTILITIES ENCOUNTERED OR ABANDONED.

CONSTRUCTION NOTES

1. THE CONTRACTOR SHALL BE RESPONSIBLE FOR MAINTAINING VEHICULAR AND PEDESTRIAN TRAFFIC FLOW DURING THE CONSTRUCTION. PROVIDE SIGNAGE AS REQUIRED TO DIRECT VEHICLES AND PEDESTRIANS AROUND CONSTRUCTION SITE.
2. ALL DIRT, FILL, GRAVEL AND OTHER SIMILAR CONSTRUCTION MATERIALS SHALL BE TRANSPORTED TO AND FROM THE SITE IN COVERED VEHICLES.
3. THE CONTRACTOR SHALL BE RESPONSIBLE FOR MAINTAINING SECURITY FOR THEIR EQUIPMENT AND MATERIALS AT ALL TIMES DURING CONSTRUCTION.
4. THE CONTRACTOR SHALL BE RESPONSIBLE FOR MAINTAINING EXISTING TRAFFIC CONTROL SIGNAGE AND INFORMATIONAL SIGNS DURING PROGRESS OF THE WORK.
5. THE CONTRACTOR SHALL COMPLY WITH ALL APPLICABLE O.S.H.A. AND NAVY CEC REGULATIONS AND SAFETY REQUIREMENTS.
6. CONTRACTOR SHALL PROVIDE QUALIFIED PERSONNEL ON SITE CAPABLE OF PROVIDING HORIZONTAL AND VERTICAL SURVEY CONTROL.
7. SURPLUS EXCAVATED MATERIAL SHALL BE TRUCKED AND DELIVERED TO AN ON-SITE DISPOSAL SITE MANAGED BY PNSY CODE 357. CONTRACTOR SHALL COORDINATE THIS DISPOSAL THROUGH THE CONTRACTING OFFICER.
8. CATCH BASIN RIMS SHALL BE SET TO PROMOTE POSITIVE RUNOFF INTO THE BASIN INLETS. MANHOLE RIMS SHALL BE SET (+0"/-0.25") BELOW FINISH GRADE.
9. ALL UTILITY PIPES AND STRUCTURES REMOVED AS PART OF THE CONSTRUCTION SHALL BE DISPOSED OF OFF SITE IN ACCORDANCE WITH ALL LOCAL, STATE AND FEDERAL GOVERNMENT REGULATIONS AT THE CONTRACTOR'S EXPENSE.
10. ALL CONSTRUCTION SIGNS SHALL BE DESIGNED TO WITHSTAND 50MPH VELOCITY WINDS AND MEET APPLICABLE OSHA STANDARDS.
11. TRENCH EXCAVATION SHALL BE ACCOMPLISHED AT LOW TIDE (±1 HOUR)
12. CONTRACTOR SHALL NOT EXCAVATE OUTSIDE ESTABLISHED LIMITS OF WORK.

ABBREVIATIONS

@	AT
APPROX	APPROXIMATELY
B.O.	BOTTOM OF
BMP	BEST MANAGEMENT PRACTICES
CBR	CATCH BASIN ROUND
CBS	CATCH BASIN SQUARE
CEC	CIVIL ENGINEERING CORPS
CLR	CLEAR
CONC	CONCRETE
ø , DIA	DIAMETER
DIP	DUCTILE IRON PIPE
DMH	DRAIN MANHOLE
DWG	DRAWING
DWGS	DRAWINGS
ELEC	ELECTRIC
ELEV	ELEVATION
EMH	ELECTRICAL MANHOLE
EP	EDGE PAVEMENT
EQUIP	EQUIPMENT
EW	EACH WAY
EX	EXISTING
EXIST	EXISTING
FFE	FINISH FLOOR ELEVATION
IPO	INDUSTRIAL POWER OUTLET
IN	INCHES
LBC	ELECTRICAL LOAD BANK CONNECTION POINT
LF	LINEAR FEET
MAX	MAXIMUM
MDEP	MAINE DEPARTMENT OF ENVIRONMENTAL PROTECTION
MH	MANHOLE
N/A	NOT APPLICABLE
NAVD	NORTH AMERICAN VERTICAL DATUM
NGVD	NATIONAL GEODETIC VERTICAL DATUM
NIC	NOT IN CONTRACT
NTS	NOT TO SCALE
O.S.H.A.	OCCUPATIONAL SAFETY AND HEALTH ADMINISTRATION
PR	PROPOSED
PVC	POLY VINYL CHLORIDE
RCP	REINFORCED CONCRETE PIPE
SMH	SEWER MANHOLE
S.F.	SQUARE FEET/FOOT
SQ	SQUARE
STMH	STEAM MANHOLE
SYL	SINGLE YELLOW LINE
T&B	TOP AND BOTTOM
TBM	TEMPORARY BENCH MARK
T.O.	TOP OF
TYP	TYPICAL
VIF	VERIFY IN FIELD
W/	WITH

SYM	DESCRIPTION	DATE	APPR
0	ISSUED FOR CONSTRUCTION	10/28/2016	CBC

STATE OF MAINE
CALEN B. COLBY
No. 6364
LICENSED PROFESSIONAL ENGINEER
10/28/16

Colby Company engineering
A/E INFO

APPROVED
David W. Grunfeld
FOR COMMANDER NAVFAC

ACTIVITY
TIM FISHER
C. 2370.6 BRANCH HEAD

SATISFACTORY TO DATE 10/28/2016
DES JTR | DRW BVD | CHK CBC
PM/DM PETER STOCKLESS
BRANCH MANAGER IAN BODWELL
FEAD/PM&E AMIN BAHROUR
FIRE PROTECTION PATRICK BAKAJ

DEPARTMENT OF THE NAVY
NAVAL FACILITIES ENGINEERING COMMAND ~ MID-ATLANTIC
PUBLIC WORKS DEPARTMENT - MAINE
NAVAL FACILITIES ENGINEERING COMMAND
NAVAL SHIPYARD - PORTSMOUTH, NH
PORTSMOUTH NAVAL SHIPYARD
KITTERY, ME
DRY DOCK #1 DEFUELING COMPLEX
SITE & FOUNDATIONS
GENERAL NOTES, LEGEND, AND ABBREVIATIONS

EPROJECT NO.: 1363311
CONSTR. CONTR. NO. N40085-17-C-5002
NAVFAC DRAWING NO. 12734744
SHEET 7 OF 46
C-001 | DD1-16-825

DRAWFORM REVISION: 10 OCTOBER 2014

10/28/2016 7:45:39 AM X:\297 PORTSMOUTH NAVAL SHIPYARD\297.005.001 - DD#1 DEFUELING COMPLEX DESIGN\DRAWINGS\SITE - FOUNDATIONS\SHEETS\C-001.DWG

NOTES:

1. SEE DRAWING C-001 FOR GENERAL NOTES, LEGEND AND ABBREVIATIONS.

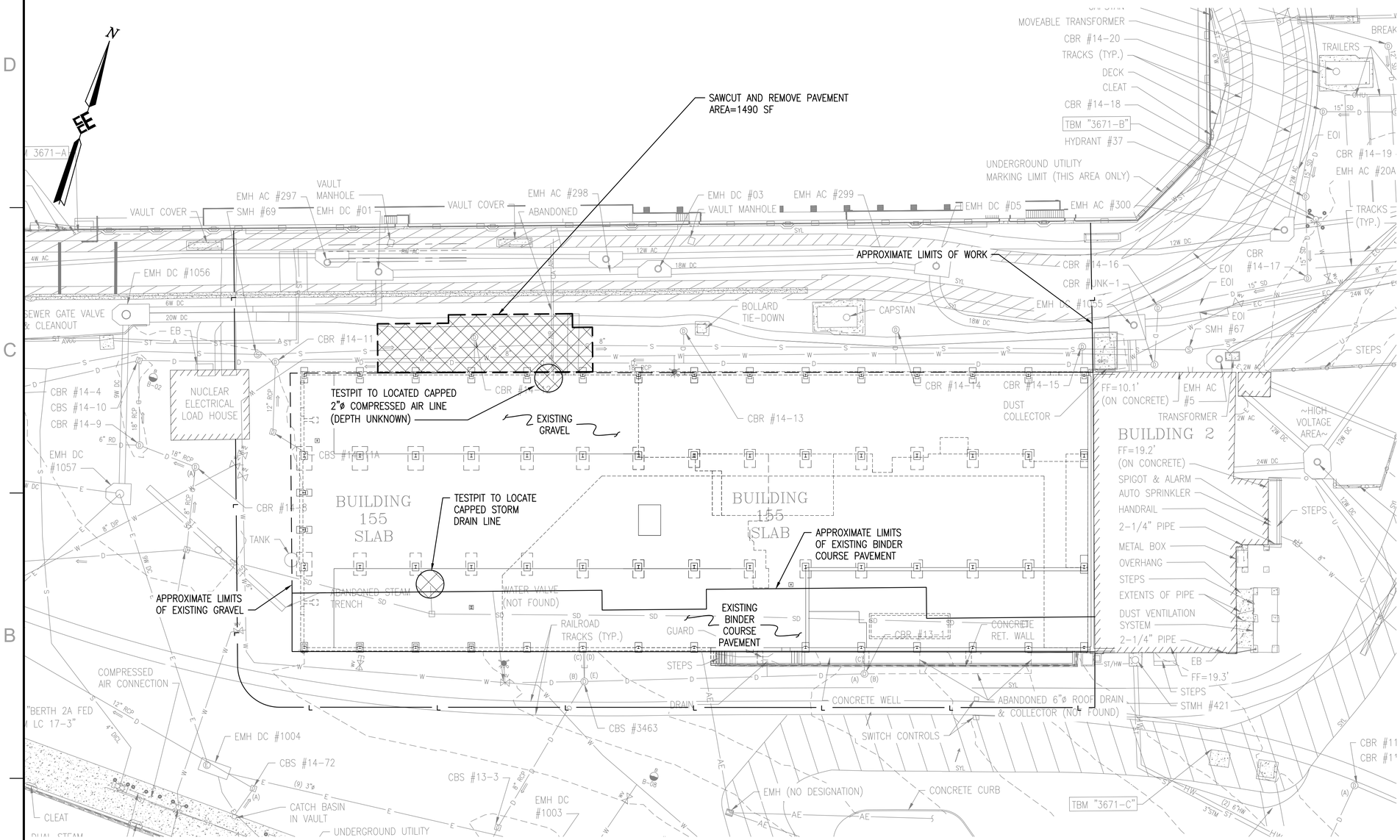

SITE DEMOLITION PLAN

SCALE: 1" = 20'

SYM	DESCRIPTION	DATE	APPR
0	ISSUED FOR CONSTRUCTION	10/28/2016	CBC

NAVFAC

STATE OF MAINE — CALEN B. COLBY No. 6384 — PROFESSIONAL ENGINEER — LICENSED — 10/28/16

Colby Company engineering

A/E INFO

APPROVED: David W. Grunfeld
FOR COMMANDER NAVFAC

ACTIVITY: TIM FISHER, C. 2370.6 BRANCH HEAD

SATISFACTORY TO DATE 10/28/2016

DES JTR | DRW BVD | CHK CBC

PMDM: PETER STOCKLESS
BRANCH MANAGER: IAN BODWELL
FEAD/PM&E: AMIN BAHROUR
FIRE PROTECTION: PATRICK BAKAJ

DEPARTMENT OF THE NAVY
NAVAL FACILITIES ENGINEERING COMMAND
PUBLIC WORKS DEPARTMENT - MAINE

NAVAL FACILITIES ENGINEERING COMMAND ~ MID-ATLANTIC
NAVAL SHIPYARD - PORTSMOUTH, NH

PORTSMOUTH NAVAL SHIPYARD
KITTERY, ME

DRY DOCK #1 DEFUELING COMPLEX
SITE & FOUNDATIONS

SITE DEMOLITION PLAN

EPROJECT NO.: 1363311

CONSTR. CONTR. NO. N40085-17-C-5002

NAVFAC DRAWING NO. 12734745

SHEET 8 OF 46

C-101 | DD1-16-826

DRAWFORM REVISION: 10 OCTOBER 2014

10/28/2016 7:46:56 AM X:\297 PORTSMOUTH NAVAL SHIPYARD\297.005.001 - DD#1 DEFUELING COMPLEX DESIGN\DRAWINGS\SITE - FOUNDATIONS\SHEETS\C-101.DWG

KEYED NOTES:

1. CONNECT TO EXISTING COMPRESSED AIR LINE VALVE.
2. 1 1/2" SCHEDULE 40 WELDED COATED STEEL COMPRESSED AIR LINE. SEE COMPRESSED AIR SPECIFICATION 43 15 00.
3. PROVIDE AND INSTALL RECESSED PRECAST CONCRETE VAULT AND VALVE. SEE DETAIL A1/C-502. REFER TO PASSAGEWAY MECHANICAL DRAWINGS FOR CONTINUATION REQUIREMENTS.

NOTES:

1. REFER TO DRAWING C-001 FOR LEGEND, GENERAL NOTES, AND ABBREVIATIONS.
2. PORTAL CRANE CAPACITIES ARE SHOWN FOR A WESTMONT PORTAL CRANE.
3. SEE DRAWING C-103 FOR LAYOUT.

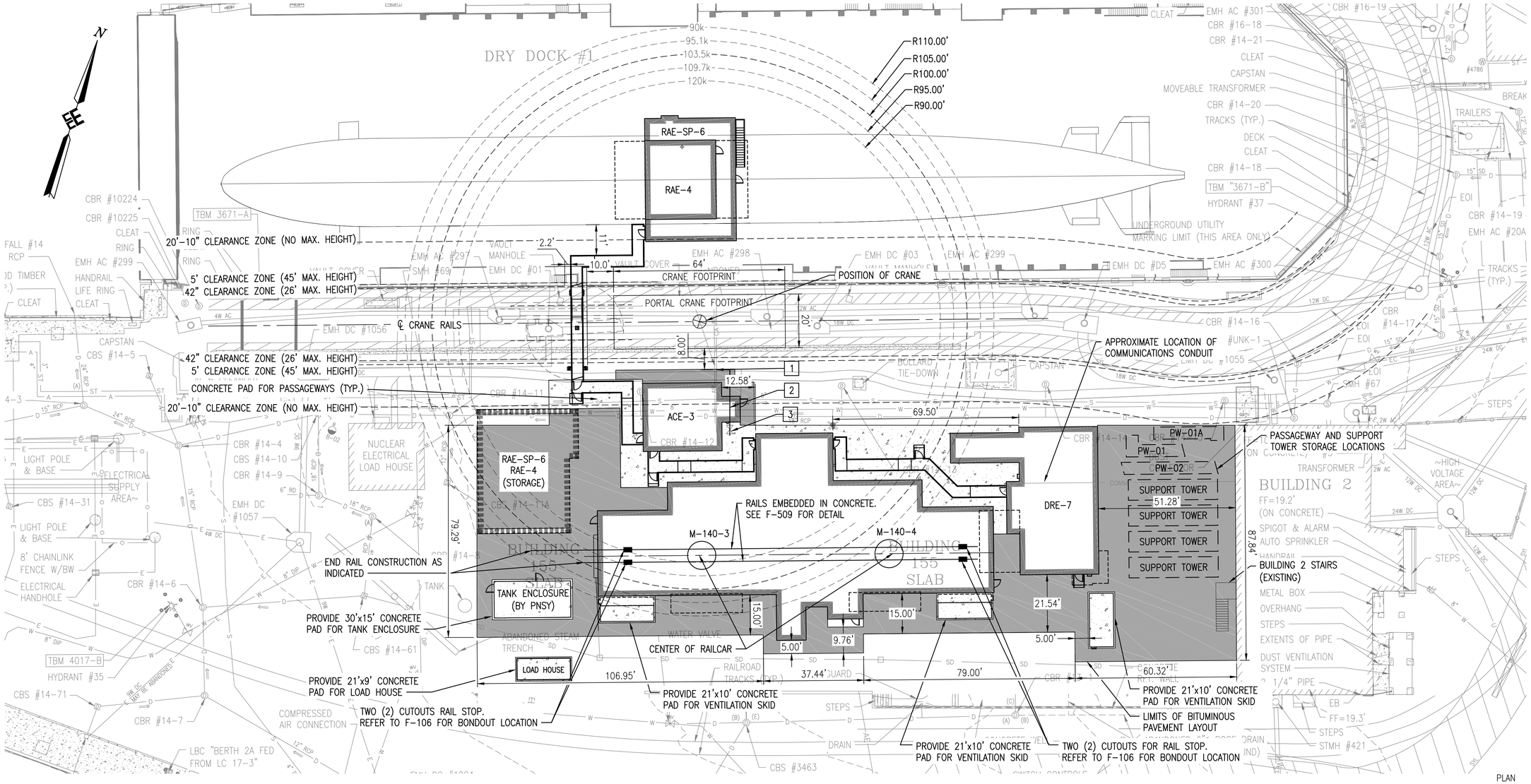

OVERALL SITE LAYOUT PLAN

SCALE: 1" = 20'-0"

SYM	DESCRIPTION	DATE	APPR
0	ISSUED FOR CONSTRUCTION	10/28/2016	CBC

NAVFAC

STATE OF MAINE — CALEN B. COLBY No. 6384 — LICENSED PROFESSIONAL ENGINEER — 10/28/16

Colby Company engineering

A/E INFO

APPROVED: David W. Grunfeld

FOR COMMANDER NAVFAC

ACTIVITY: TIM FISHER, C. 2370.6 BRANCH HEAD

SATISFACTORY TO DATE 10/28/2016

DES	JTR	DRW	BVD	CHK	CBC

PMDM: PETER STOCKLESS

BRANCH MANAGER: IAN BODWELL

FEAD/PM&E: AMIN BAHROUR

FIRE PROTECTION: PATRICK BAKAJ

DEPARTMENT OF THE NAVY
NAVAL FACILITIES ENGINEERING COMMAND
PUBLIC WORKS DEPARTMENT - MAINE

NAVAL FACILITIES ENGINEERING COMMAND ~ MID-ATLANTIC
NAVAL SHIPYARD - PORTSMOUTH, NH

PORTSMOUTH NAVAL SHIPYARD — KITTERY, ME

DRY DOCK #1 DEFUELING COMPLEX
SITE & FOUNDATIONS

OVERALL SITE LAYOUT PLAN

EPROJECT NO.: 1363311

CONSTR. CONTR. NO. N40085-17-C-5002

NAVFAC DRAWING NO. 12734746

SHEET 9 OF 46

C-102 | DD1-16-827

DRAWFORM REVISION: 10 OCTOBER 2014

10/28/2016 7:48:16 AM X:\297 PORTSMOUTH NAVAL SHIPYARD\297.005.001 - DD#1 DEFUELING COMPLEX DESIGN\DRAWINGS\SITE - FOUNDATIONS\SHEETS\C-102.DWG

KEYED NOTES:

1. TIES AND BALLAST WESTERLY OF RAIL CENTERLINE (STA: 2+85.19, OFF: 87.43L) PROVIDED BY OTHERS. NORTHERLY RAIL TO EXTEND 19.50' WESTERLY

NOTES:

1. REFER TO DRAWING C-001 FOR LEGEND, GENERAL NOTES, AND ABBREVIATIONS.
2. STATION AND OFFSET POINTS ARE TO THE CORNER OF CONCRETE FOUNDATION, UNLESS NOTED OTHERWISE.
3. REFER TO FOUNDATION PLANS FOR ADDITIONAL INFORMATION.

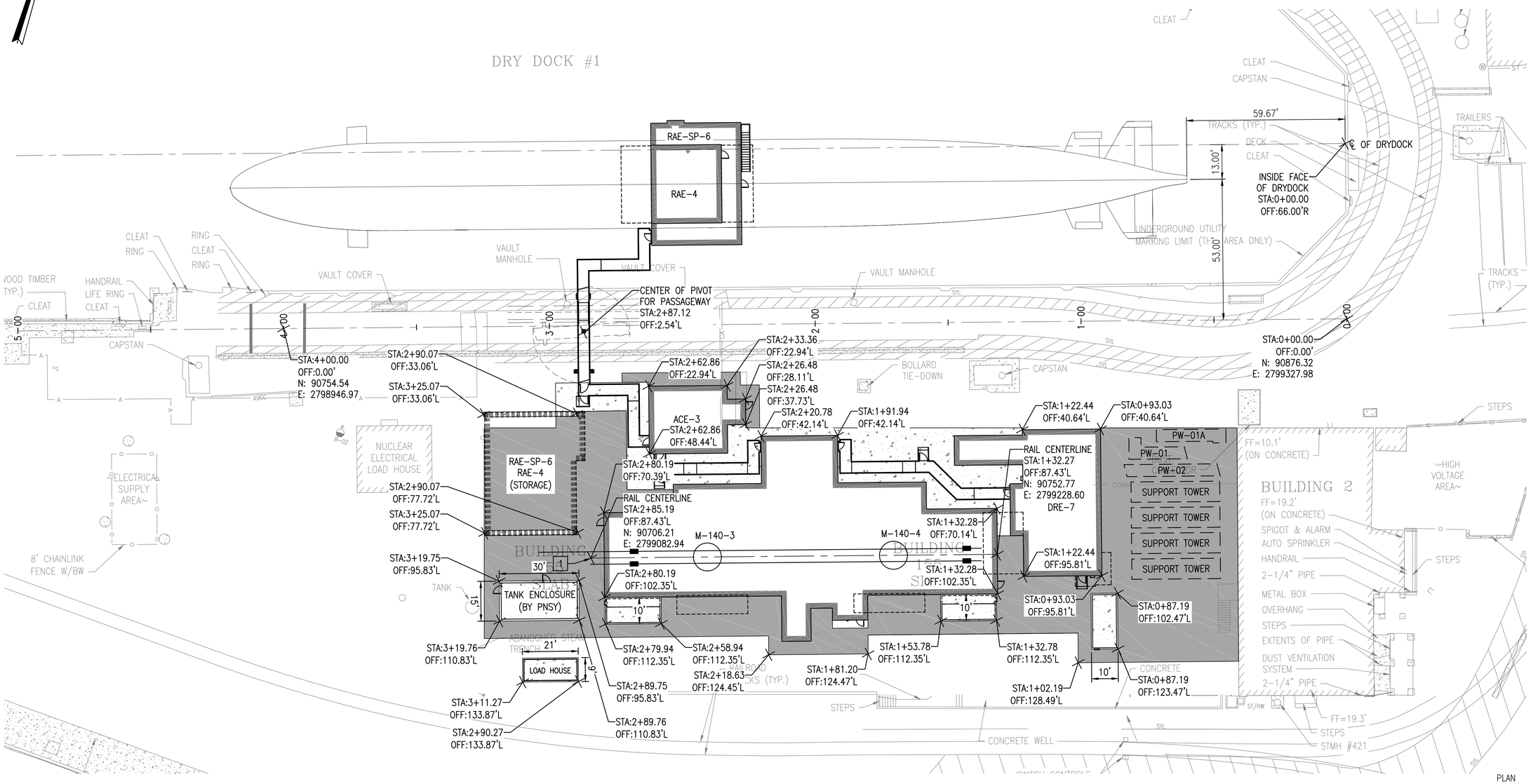

SITE LAYOUT PLAN

SCALE: 1" = 20'-0"

SYM	DESCRIPTION	DATE	APPR
0	ISSUED FOR CONSTRUCTION	10/28/2016	CBC

NAVFAC

STATE OF MAINE CALEN B. COLBY No. 6364 LICENSED PROFESSIONAL ENGINEER 10/28/16

Colby Company engineering

A/E INFO

APPROVED David W. Grunfeld

FOR COMMANDER NAVFAC

ACTIVITY: TIM FISHER, C. 2370.6 BRANCH HEAD

SATISFACTORY TO DATE 10/28/2016

DES JTR | DRW BVD | CHK CBC

PMDM: PETER STOCKLESS

BRANCH MANAGER: IAN BODWELL

FEA/PM&E: AMIN BAHROUR

FIRE PROTECTION: PATRICK BAKAJ

DEPARTMENT OF THE NAVY
NAVAL FACILITIES ENGINEERING COMMAND
PUBLIC WORKS DEPARTMENT - MAINE

NAVAL FACILITIES ENGINEERING COMMAND ~ MID-ATLANTIC
NAVAL SHIPYARD - PORTSMOUTH, NH

PORTSMOUTH NAVAL SHIPYARD — KITTERY, ME

DRY DOCK #1 DEFUELING COMPLEX SITE & FOUNDATIONS

SITE LAYOUT PLAN

EPROJECT NO.: 1363311

CONSTR. CONTR. NO. N40085-17-C-5002

NAVFAC DRAWING NO. 12734747

SHEET 10 OF 46

C-103 | DD1-16-828

DRAWFORM REVISION: 10 OCTOBER 2014

10/28/2016 7:48:51 AM X:\297 PORTSMOUTH NAVAL SHIPYARD\297.005.001 - DD#1 DEFUELING COMPLEX DESIGN\DRAWINGS\SITE - FOUNDATIONS\SHEETS\C-103.DWG

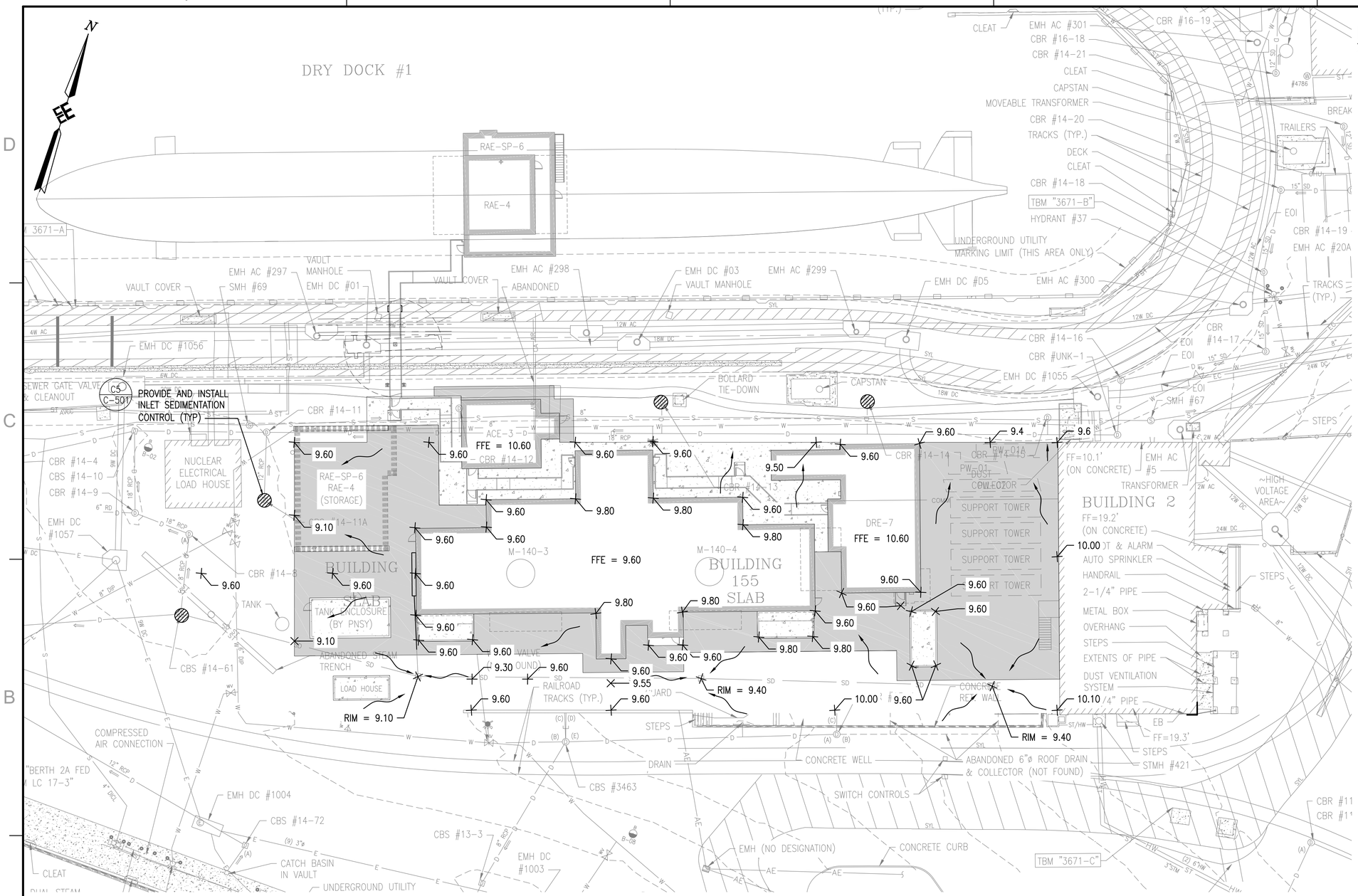

NOTES:

1. SEE DRAWING C-001 FOR GENERAL NOTES, LEGEND AND ABBREVIATIONS.

SITE GRADING AND DRAINAGE PLAN

SCALE: 1" = 20'

PLAN NORTH

0 20' 40'
Scale: 1" = 20'-0"

SYM	DESCRIPTION	DATE	APPR
0	ISSUED FOR CONSTRUCTION	10/28/2016	CBC

NAVFAC

STATE OF MAINE
CALEN B. COLBY
No. 6384
LICENSED PROFESSIONAL ENGINEER
10/28/16

Colby Company engineering

A/E INFO

APPROVED
David W. Greenfield
FOR COMMANDER NAVFAC

ACTIVITY
TIM FISHER
C. 2370.6 BRANCH HEAD

SATISFACTORY TO DATE 10/28/2016
DES JTR DRW BVD CHK CBC
PMDM PETER STOCKLESS
BRANCH MANAGER IAN BODWELL
FEA/PM&E AMIN BAHROUR
FIRE PROTECTION PATRICK BAKAJ

DEPARTMENT OF THE NAVY
NAVAL FACILITIES ENGINEERING COMMAND
PUBLIC WORKS DEPARTMENT - MAINE
NAVAL FACILITIES ENGINEERING COMMAND ~ MID-ATLANTIC
NAVAL SHIPYARD - PORTSMOUTH, NH
PORTSMOUTH NAVAL SHIPYARD
KITTERY, ME
DRY DOCK #1 DEFUELING COMPLEX
SITE & FOUNDATIONS
SITE GRADING AND DRAINAGE PLAN

EPROJECT NO.: 1363311
CONSTR. CONTR. NO. N40085-17-C-5002
NAVFAC DRAWING NO. 12734748
SHEET 11 OF 46
C-104 DD1-16-829

DRAWFORM REVISION: 10 OCTOBER 2014

10/28/2016 7:49:22 AM X:\297 PORTSMOUTH NAVAL SHIPYARD\297.005.001 - DD#1 DEFUELING COMPLEX DESIGN\DRAWINGS\SITE - FOUNDATIONS\SHEETS\C-104.DWG

EROSION CONTROL NOTES

A. APPLICABILITY

1. DRY DOCK #1 DEFUELING FACILITY SITE: INSTALL SILT SACKS AND DIRT BAGS AT DOWN GRADIENT DRAINAGE STRUCTURES.
2. LAYDOWN AREAS: INSTALL ALL APPLICABLE MEASURES AS SPECIFIED AND AS REQUIRED TO MEET FEDERAL AND LOCAL REQUIREMENTS.

B. GENERAL NOTES

DURING CONSTRUCTION, AND THEREAFTER, EROSION CONTROL MEASURES ARE TO BE IMPLEMENTED AS NOTED. THE SMALLEST PRACTICAL AREA OF LAND SHALL BE EXPOSED AT ONE TIME DURING CONSTRUCTION. WHEN LAND IS EXPOSED DURING DEVELOPMENT, THE EXPOSURE SHALL BE KEPT AT A MAXIMUM OF 30 DAYS.

EROSION AND SEDIMENT CONTROL PRACTICES INCLUDE THE USE OF THE FOLLOWING: SILT FENCE BARRIERS, INLET PROTECTION, TEMPORARY CONSTRUCTION EXITS, TEMPORARY DIVERSION DIKES, SEDIMENT BASINS, AND PUMPED DISCHARGE SEDIMENT CONTROL DEVICES.

CONTRACTOR SHALL DESIGNATE AN ENVIRONMENTAL MANAGER WHO SHALL BE RESPONSIBLE FOR INSPECTING ALL INSTALLED EROSION CONTROL MEASURES, MONITORING THEIR EFFECTIVENESS.

SUBMIT EROSION AND SEDIMENT CONTROL INSPECTION REPORTS TO THE CONTRACTING OFFICER ONCE EVERY 7 CALENDAR DAYS AND BEFORE AND AFTER (24 HOURS) A STORM EVENT PRIOR TO PERMANENT STABILIZATION. EROSION AND SEDIMENT CONTROL MEASURES REQUIRING MODIFICATION OR REPAIRS, OR IF ADDITIONAL MEASURES ARE DEEMED NECESSARY MUST BE COMPLETED WITHIN 7 DAYS AND PRIOR TO THE NEXT STORM EVENT.

THE PLACEMENT OF SEDIMENT BARRIERS SHALL BE COMPLETED IN ACCORDANCE WITH GUIDELINES ESTABLISHED BY MDEP STANDARDS AND IN ACCORDANCE WITH THE EROSION CONTROL PLAN AND DETAILS HEREIN. EROSION CONTROL MEASURES SHALL CONFORM TO THE LATEST REVISION MAINE EROSION AND SEDIMENT CONTROL BMPS, PUBLISHED BY THE BUREAU OF LAND AND WATER QUALITY, MAINE DEPARTMENT OF ENVIRONMENTAL PROTECTION, LATEST EDITION.

CONTRACTOR SHALL PREPARE DETAILED SCHEDULE AND MARKED UP SITE PLAN INDICATING AREAS OF WORK AND DATES OF DISTURBANCE. EROSION CONTROL MEASURES SHALL REMAIN INSTALLED AND MAINTAINED UNTIL THE SITE IS STABLE. EROSION CONTROL MEASURES SHALL BE REMOVED WITHIN 30 DAYS OF PERMANENT STABILIZATION BEING ATTAINED.

CONTRACTOR SHALL INSTALL ADDITIONAL MEASURES TO CONTROL EROSION AS IS NECESSARY GIVEN SITE AND WEATHER CONDITIONS. SITE ENTRANCES AND ADJACENT ROADWAYS SHALL BE PERIODICALLY SWEPT TO MINIMIZE TRACKING OF SEDIMENT AND DEBRIS. ALL CATCH BASINS AND DRAINAGE INLETS SUBJECT TO RUNOFF FROM PROJECT SITE SHALL BE CLEANED AFTER THE SITE HAS BEEN FULLY STABILIZED.

KEEP DUST DOWN AT ALL TIMES, INCLUDING DURING NONWORKING PERIODS. SPRINKLE OR TREAT, WITH DUST SUPPRESSANTS, THE SOIL AT THE SITE, HAUL ROADS, AND OTHER AREAS DISTURBED BY OPERATIONS. DRY POWER BROOMING WILL NOT BE PERMITTED. INSTEAD, USE VACUUMING, WET MOPPING, WET SWEEPING, OR WET POWER BROOMING.

C. MAINTENANCE: DURING THE PERIOD OF CONSTRUCTION AND/OR UNTIL LONG TERM STABILIZATION IS ESTABLISHED:

1. ALL SILT FENCES SHALL BE CHECKED WEEKLY AND AFTER SIGNIFICANT RAINFALL EVENTS. REPAIRS SHALL BE MADE TO CORRECT UNDERMINING OR DETERIORATION OF THE BARRIERS.

E. WINTER CONSTRUCTION

"WINTER CONSTRUCTION" IS CONSTRUCTION ACTIVITY PERFORMED DURING THE PERIOD FROM NOVEMBER 1 THROUGH APRIL 15. IF DISTURBED AREAS ARE NOT STABILIZED WITH PERMANENT MEASURES BY NOVEMBER 1 OR IF NEW SOIL DISTURBANCE OCCURS AFTER NOVEMBER 1, BUT BEFORE APRIL 15, THEN THESE AREAS MUST BE PROTECTED AND RUNOFF MUST BE CONTROLLED BY ADDITIONAL MEASURES AND RESTRICTIONS.

WINTER EROSION CONTROL MEASURES SHALL CONFORM TO MAINE EROSION AND SEDIMENT CONTROL BMPS SECTION A–3.

WINTER EXCAVATION AND EARTHWORK SHALL BE COMPLETED SUCH THAT NO MORE THAN 1 ACRE OF THE SITE IS WITHOUT STABILIZATION AT ANY ONE TIME. LIMIT THE EXPOSED AREA TO THOSE AREAS IN WHICH WORK IS TO OCCUR DURING THE FOLLOWING 15 DAYS AND THAT CAN BE MULCHED IN ONE DAY PRIOR TO ANY SNOW EVENT.

DISTURBED SOILS – BY SEPTEMBER 15 THE CONTRACTOR SHALL STABILIZE ALL DISTURBED SOILS ON THE SITE. IF THE CONTRACTOR FAILS TO STABILIZE THESE SOILS BY THIS DATE, THE CONTRACTOR SHALL TAKE THE FOLLOWING ACTION TO STABILIZE THE SOIL FOR LATE FALL AND WINTER:

1. STABILIZE THE SOIL WITH MULCH – BY NOVEMBER 15 THE CONTRACTOR SHALL MULCH THE DISTURBED SOIL BY SPREADING HAY OR STRAW AT A RATE OF AT LEAST 150 POUNDS PER 1000 SQUARE FEET ON THE AREA SO THAT NO SOIL IS VISIBLE THROUGH THE MULCH, IMMEDIATELY AFTER APPLYING THE CONTRACTOR SHALL ANCHOR THE MULCH WITH NETTING OR OTHER METHOD TO PREVENT WIND FROM MOVING THE MULCH OFF THE DISTURBED SOIL

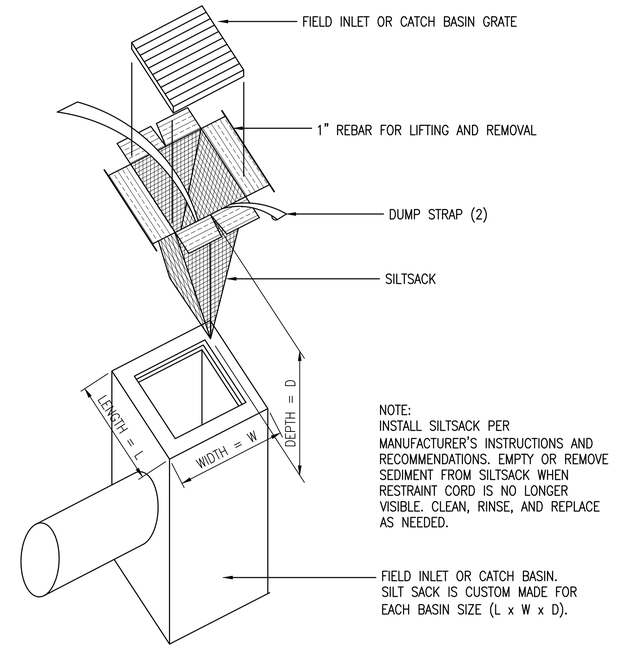

SILTSACK INLET SEDIMENT CONTROL DEVICE (C5)

SCALE: NTS C–104

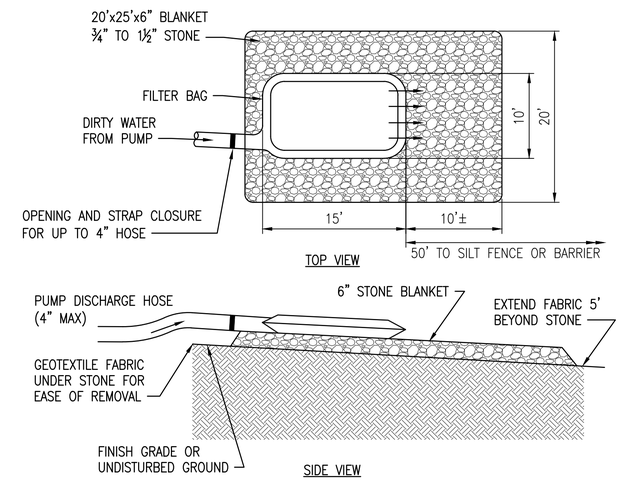

NOTES:
1. DIRT BAG MATERIAL BASED ON PARTICLE SIZE IN DIRTY WATER. I.E. FOR COARSE PARTICLES A WOVEN MATERIAL; FOR SILTS/CLAYS A NON–WOVEN MATERIAL.
2. DO NOT OVER PRESSURIZE DIRT BAG OR USE BEYOND CAPACITY.
3. LOCATE DISCHARGE SITE ON FLAT UPLAND AREAS AS FAR AWAY AS POSSIBLE FROM NATURAL RESOURCES AND POINTS OF CONCENTRATED FLOW.
4. DOWNGRADIENT RECEIVING AREA MUST BE STABLE FROM EROSION, E.G. COARSE GRAVEL/STONE.
5. DISCHARGE NOT PERMITTED WITHIN 25' OF A STREAM OR WETLAND. CONSULT MDEP IF STRUCTURE MUST BE WITHIN 75' OF STREAM OR WATER BODY. SECONDARY CONTAINMENT MAY BE REQUIRED.
6. AN OIL/WATER SEPARATOR OR FILTRATION MECHANISM SHALL BE INSTALLED PRIOR TO DISCHARGE IF COLLECTED DISCHARGE IS CONTAMINATED WITH PETROLEUM PRODUCTS.

PUMPED DISCHARGE SEDIMENT CONTROL DEVICE (A5)

SCALE: NTS

SYM	DESCRIPTION	DATE	APPR
0	ISSUED FOR CONSTRUCTION	10/28/2016	CBC

NAVFAC

STATE OF MAINE — CALEN B. COLBY No. 6384 — LICENSED PROFESSIONAL ENGINEER — 10/28/16

Colby Company engineering

A/E INFO

APPROVED David W. Grunfeld
FOR COMMANDER NAVFAC

ACTIVITY: TIM FISHER, C. 2370.6 BRANCH HEAD

SATISFACTORY TO DATE 10/28/2016

DES JTR | DRW BVD | CHK CBC

PMDM: PETER STOCKLESS
BRANCH MANAGER: IAN BODWELL
FEA/PM&E: AMIN BAHROUR
FIRE PROTECTION: PATRICK BAKAJ

DEPARTMENT OF THE NAVY
NAVAL FACILITIES ENGINEERING COMMAND
PUBLIC WORKS DEPARTMENT - MAINE

NAVAL FACILITIES ENGINEERING COMMAND ~ MID-ATLANTIC
NAVAL SHIPYARD - PORTSMOUTH, NH

PORTSMOUTH NAVAL SHIPYARD — KITTERY, ME
DRY DOCK #1 DEFUELING COMPLEX
SITE & FOUNDATIONS

EROSION AND SEDIMENTATION CONTROL PLAN

EPROJECT NO.: 1363311
CONSTR. CONTR. NO.: N40085-17-C-5002
NAVFAC DRAWING NO.: 12734749
SHEET 12 OF 46

C-501 | DD1-16-830

DRAWFORM REVISION: 10 OCTOBER 2014

10/28/2016 7:49:37 AM X:\297 PORTSMOUTH NAVAL SHIPYARD\297.005.001 - DD#1 DEFUELING COMPLEX DESIGN\DRAWINGS\SITE - FOUNDATIONS\SHEETS\C-501.DWG

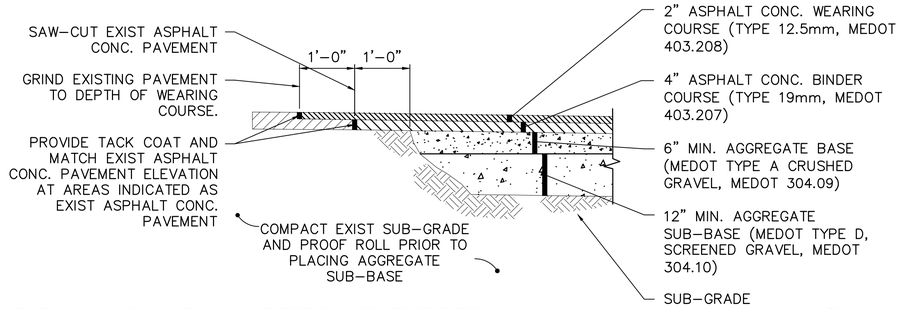

TYPICAL ASPHALT CONCRETE PAVEMENT DETAIL - CIA (D2)

SCALE: NTS

TYPICAL ASPHALT CONCRETE PAVEMENT NOTES:

1. PROVIDE AND CONSTRUCT HOT MIX ASPHALT IN ACCORDANCE WITH MEDOT STANDARD SPECIFICATIONS, DIVISION 400 – PAVEMENTS.
2. PROVIDE AND CONSTRUCT SUB-BASE AND BASE MATERIALS IN ACCORDANCE WITH MEDOT STANDARD SPECIFICATIONS, DIVISION 300 – BASES.
3. MATERIALS SHALL COMPLY WITH APPLICABLE SECTIONS OF MEDOT SPECIFICATIONS DIVISION 700 – MATERIALS.

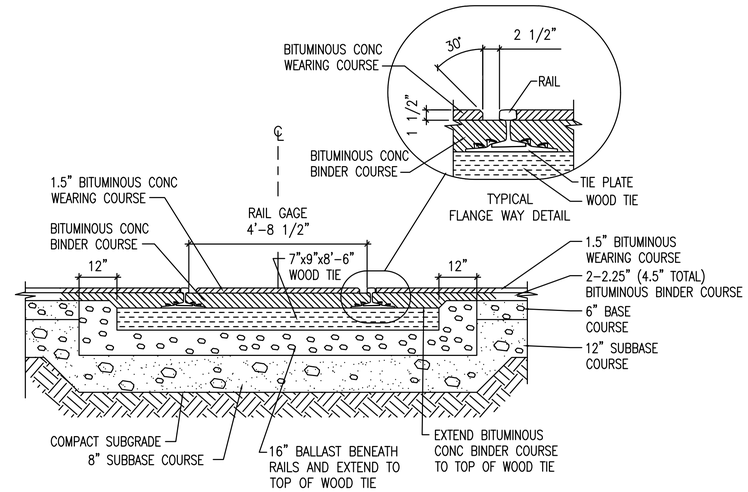

RAILROAD TRACK IN PAVEMENT (C3)

SCALE: NTS

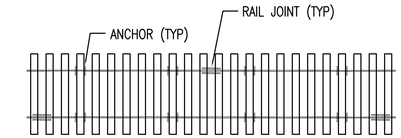

STANDARD

RAIL ANCHOR SPACING (D5)

SCALE: NTS

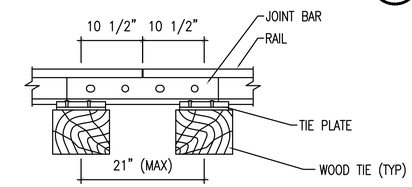

RAIL JOINT AND TIE SPACING (C5)

SCALE: NTS

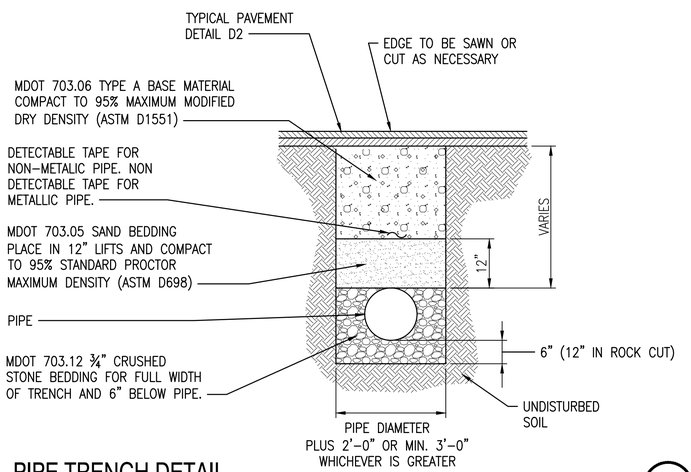

PIPE TRENCH DETAIL (B2)

SCALE: NTS

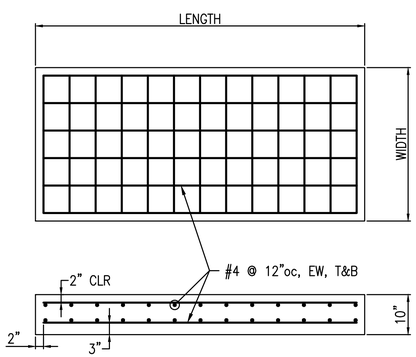

PAD TYPE	LENGTH	WIDTH
DRE-7 VENTILATION SKID	21'-0"	10'-0"
M-140 VENTILATION SKID (2)	21'-0"	10'-0"
TANK ENCLOSURE	30'-0"	15'-0"
LOAD HOUSE	21'-0"	9'-0"

NOTES:

1. BROOM FINISH, TOOLED EDGES

TYPICAL CONCRETE PAD DETAIL (B3)

SCALE: NTS

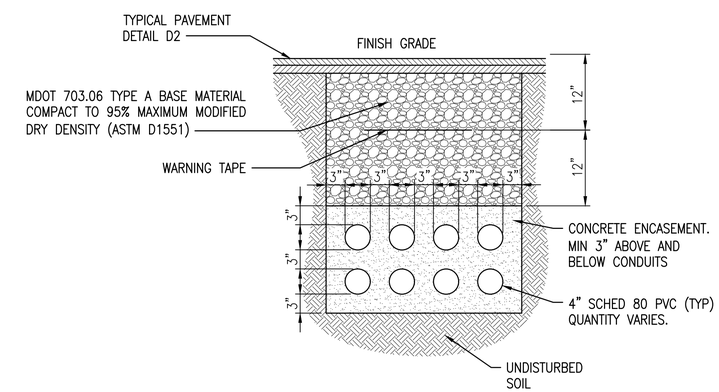

ELECTRICAL TRENCH DETAIL (B4)

SCALE: NTS

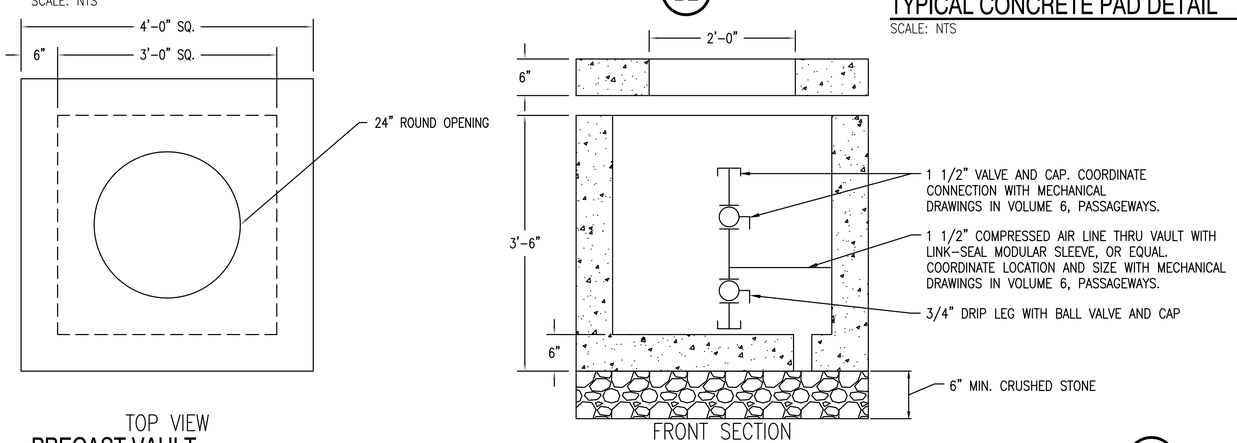

PRECAST VAULT (A1)

SCALE: NTS

C-102

SYM	DESCRIPTION	DATE	APPR
0	ISSUED FOR CONSTRUCTION	10/28/2016	CBC

NAVFAC

STATE OF MAINE — CALEN B. COLBY No. 6364 — LICENSED PROFESSIONAL ENGINEER — 10/28/16

Colby Company engineering

APPROVED: David W. Grunfeld — FOR COMMANDER NAVFAC

ACTIVITY: TIM FISHER, C. 2370.6 BRANCH HEAD

SATISFACTORY TO DATE 10/28/2016

DES JTR | DRW BVD | CHK CBC

PM/DM: PETER STOCKLESS

BRANCH MANAGER: IAN BODWELL

FEAD/PM&E: AMIN BAHROUR

FIRE PROTECTION: PATRICK BAKAJ

DEPARTMENT OF THE NAVY
NAVAL FACILITIES ENGINEERING COMMAND
PUBLIC WORKS DEPARTMENT - MAINE
NAVAL FACILITIES ENGINEERING COMMAND – MID-ATLANTIC
NAVAL SHIPYARD - PORTSMOUTH NH
PORTSMOUTH NAVAL SHIPYARD
KITTERY, ME
DRY DOCK #1 DEFUELING COMPLEX
SITE & FOUNDATIONS
SITE DETAILS

EPROJECT NO.: 1363311

CONSTR. CONTR. NO. N40085-17-C-5002

NAVFAC DRAWING NO. 12734750

SHEET 13 OF 46

C-502 | DD1-16-831

DRAWFORM REVISION: 10 OCTOBER 2014

10/28/2016 7:49:48 AM X:\297 PORTSMOUTH NAVAL SHIPYARD\297.005.001 - DD#1 DEFUELING COMPLEX DESIGN\DRAWINGS\SITE - FOUNDATIONS\SHEETS\C-502.DWG

FOUNDATION NOTES

1. EXISTING GEOTECHNICAL INFORMATION IS PROVIDED IN THE DIVISION 1 SPECIFICATIONS. PARAMETERS AND ASSUMPTIONS LISTED BELOW ARE BASED ON "BUILDING 178 ENERGY CONSERVATION AND STRUCTURAL REPAIR PORTSMOUTH NAVAL SHIPYARD, KITTERY, ME. DATED 12 OCTOBER 2012.

2. COORDINATE THESE DRAWINGS WITH CIVIL/SITE DRAWINGS AS WELL AS THE DRAWINGS PART OF VOLUMES 2,3,4,5 AND 6.

3. FOUNDATION DESIGN IS BASED ON THE FOLLOWING:
   A. MICROPILES DESIGNED AND INSTALLED FOR THE LOADS INDICATED ON THIS SHEET.
   B. SHALLOW FOUNDATION BEARING DIRECTLY ON LEDGE. ALLOWABLE BEARING CAPACITY IS 20,000 PSF
   C. SHALLOW FOUNDATION BEARING CAPACITY ON STRUCTURAL FILL IS 4000 PSF
   D. FRICTION COEFF. LEDGE = 0.5
   E. FRICTION COEFF. STRUCTURAL FILL = 0.55
   F. PASSIVE PRESSURE COEFF. = 3.0
   G. ROCK ANCHOR ALLOWABLE ROCK STRESS = 50 PSI

4. REFERENCE EARTHWORK SPECIFICATIONS FOR PILE INSTALLATION INFORMATION.

5. EXTEND BOTTOM OF EXTERIOR PILE CAPS & GRADE BEAMS AT LEAST 4'–0" BELOW THE FINAL EXTERIOR GRADE OR PIN TO LEDGE FOR PROTECTION AGAINST FROST.

6. NO FILL FOR BUILDING SUPPORT SHALL BE PLACED UNTIL SUBGRADES HAVE BEEN OBSERVED AND APPROVED BY THE GOVERNMENT.

7. FILL SHALL BE PLACED AND COMPACTED IN ACCORDANCE WITH THE EARTHWORK SPECIFICATIONS.

8. WHEN SELECT OR APPROVED FILL IS SPECIFIED, IT SHALL BE PLACED & COMPACTED IN ACCORDANCE WITH THE EARTHWORK SPECIFICATIONS.

9. SOILS EXPOSED AT THE BASE OF ALL SATISFACTORY FOUNDATION EXCAVATIONS SHOULD BE PROTECTED AGAINST ANY DETRIMENTAL CHANGE IN CONDITION, SUCH AS DISTURBANCE FROM RAIN OR FROST. SURFACE RUNOFF SHOULD BE DRAINED AWAY FROM THE EXCAVATIONS AND NOT BE ALLOWED TO POND. FOUNDATION EXCAVATIONS SHOULD BE ADEQUATELY PROTECTED FROM RAINFALL OR FREEZING CONDITIONS. GROUNDWATER SHOULD BE ANTICIPATED FOR EXCAVATIONS AND APPROPRIATE DEWATERING MEASURES SHALL BE EMPLOYED.

10. SLOPE FOOTING EXCAVATIONS AS REQUIRED FOR STABILITY AND SAFETY OR PROVIDE SHEETING OR SHORING IN ACCORDANCE WITH OSHA REQUIREMENTS. BRACED EXCAVATIONS SHALL BE DESIGNED BY A PROFESSIONAL ENGINEER REGISTERED IN THE STATE OF MAINE.

CONCRETE NOTES

1. CONCRETE WORK SHALL CONFORM TO "BUILDING CODE REQUIREMENTS FOR REINFORCED CONCRETE (ACI 318)," AND "SPECIFICATIONS FOR STRUCTURAL CONCRETE (ACI 301)." GENERAL CONTRACTOR, CONSTRUCTION MANAGER AND/OR OWNER'S CLERK OF THE WORKS SHALL HAVE AVAILABLE ON SITE AT ALL TIMES A COPY OF ACI "FIELD REFERENCE MANUAL SP–15".

2. CONCRETE SHALL BE PLACED IN THE PRESENCE OF A REPRESENTATIVE OF AN APPROVED TESTING AGENCY.

3. PORTLAND CEMENT SHALL CONFORM TO ASTM C150 TYPE I OR II. AGGREGATES SHALL CONFORM TO ASTM C33 CLASS 3S.

4. READY–MIX CONCRETE MUST COMPLY WITH THE REQUIREMENTS OF ASTM C94, AND AS SPECIFIED HEREIN. PROVIDE BATCH TICKET FOR EACH BATCH DISCHARGED AND USED IN WORK, INDICATING PROJECT NAME, MIX TYPE, MIX TIME, BATCH QUANTITY, AND PROPORTIONS OF INGREDIENTS. JOB–SITE MIXING WILL NOT BE PERMITTED.

5. REINFORCING BARS SHALL CONFORM TO ASTM A615 GRADE 60 DEFORMED BARS AND SHALL BE DETAILED, FABRICATED AND PLACED IN ACCORDANCE WITH ACI 315, LATEST EDITION. WELDING OF REINFORCEMENT SHALL NOT BE PERMITTED.

6. CONCRETE MIX DESIGN:
   A. STRENGTH:
      fc'=4500 PSI
   B. AGGREGATE: SEE SPECIFICATIONS
   C. W/C RATIO: SEE SPECIFICATIONS
   D. ENTRAPPED AIR: 6% ±1½% FOR CONCRETE EXPOSED TO WEATHER OR SOIL, 3% OTHERWISE
   E. SLUMP: 4"(±1") BEFORE ADDITION OF HIGH RANGE WATER REDUCER OR PLASTICIZER
   F. ADD AIR ENTRAINING ADMIXTURE AT MANUFACTURER'S PRESCRIBED RATIO TO RESULT IN CONCRETE AT POINT OF PLACEMENT HAVING THE ABOVE NOTED AIR CONTENTS.
   G. ADDITIONAL SLUMP MAY BE ACHIEVED BY THE ADDITION OF A MIDRANGE OR HIGH RANGE WATER REDUCING ADMIXTURE. MAXIMUM SLUMP AFTER ADDITION OF ADMIXTURE SHALL BE 8 INCHES.
   H. MIX ADJUSTMENTS MAY BE REQUESTED BY THE CONTRACTOR, WHEN CHARACTERISTICS OF THE MATERIALS, JOB CONDITIONS, WEATHER OR OTHER CIRCUMSTANCES WARRANT, AT NO ADDITIONAL COST AND AS ACCEPTED BY THE GOVERNMENT. LABORATORY TEST DATA FOR THE REVISED MIX DESIGN AND STRENGTH DATA MUST BE SUBMITTED AND ACCEPTED BY THE GOVERNMENT BEFORE USING IN WORK.
   I. WATER MAY BE ADDED AT THE PROJECT SITE ONLY IF THE MAXIMUM SPECIFIED WATER–CEMENT RATIO AND SLUMP ARE NOT EXCEEDED. CONTRACTOR SHALL HAVE BATCH TICKET INDICATING WATER AND CEMENT MIXED IN THE PLANT, AND SHALL RECORD THE WATER ADDED AS EVIDENCE THAT THE WATER–CEMENT RATIO HAS NOT BEEN EXCEEDED.
   J. ADDITIONAL DOSES OF SUPER PLASTICIZER SHOULD BE USED WHEN DELAYS OCCUR AND REQUIRED SLUMP HAS NOT BEEN MAINTAINED. A MAXIMUM OF TWO ADDITIONAL DOSAGES ARE PERMITTED PER ACI 212.3R RECOMMENDATIONS.

7. CONCRETE SHALL NOT BE PLACED IN WATER OR ON FROZEN GROUND. CONCRETE SHALL BE PLACED WITHOUT HORIZONTAL CONSTRUCTION JOINTS EXCEPT WHERE SHOWN OR NOTED.

8. PROVIDE PVC SLEEVES WHERE PIPES PASS THROUGH EXTERIOR CONCRETE, OR SLABS, UNLESS SHOWN OTHERWISE.

9. COMPLETE SHOP DRAWINGS AND SCHEDULES OF ALL REINFORCING STEEL SHALL BE PREPARED BY THE CONTRACTOR AND SUBMITTED TO THE GOVERNMENT FOR REVIEW. PROVIDE NECESSARY ACCESSORIES TO HOLD REINFORCEMENT SECURELY IN POSITION.

10. MINIMUM CONCRETE PROTECTIVE COVERING FOR REINFORCEMENT SHALL BE AS FOLLOWS UNLESS NOTED OTHERWISE:
    A) SURFACES CAST AGAINST AND PERMANENTLY IN CONTACT WITH EARTH: 3"
    B) FORMED SURFACES IN CONTACT WITH EARTH OR EXPOSED TO WEATHER: 2"
    C) SURFACES NOT IN CONTACT WITH EARTH OR EXPOSED TO WEATHER: 1 1/2"

CONCRETE NOTES (CONT)

11. REINFORCEMENT SHALL BE CONTINUOUS AROUND CORNERS AND AT INTERSECTIONS. PROVIDE LAPPED BARS AT SPLICES OR HOOKED BARS AT DISCONTINUOUS ENDS. PROVIDE TENSION LAP SPLICES PER THE SCHEDULE FOR ALL REINFORCING UNLESS OTHERWISE SHOWN ON PLAN.

12. FOR ALL OPENINGS IN CONCRETE WALLS AND SLABS, PROVIDE SUPPLEMENTAL REINFORCING AROUND OPENING AS SHOWN ON F–501.

13. CONSTRUCTION JOINTS SHOWN ON DRAWINGS ARE MANDATORY. OMISSIONS, ADDITIONS, OR CHANGES SHALL NOT BE MADE EXCEPT WITH THE SUBMITTAL OF A WRITTEN REQUEST TOGETHER WITH DRAWINGS OF THE PROPOSED JOINT LOCATIONS FOR APPROVAL BY THE GOVERNMENT. WHERE CONSTRUCTION JOINTS ARE NOT SHOWN, OR WHEN ALTERNATE LOCATIONS ARE PROPOSED, DRAWINGS SHOWING LOCATION OF CONSTRUCTION AND CONTROL JOINTS AND CONCRETE PLACING SEQUENCE SHALL BE SUBMITTED TO THE GOVERNMENT FOR APPROVAL PRIOR TO PREPARATION OF THE REINFORCEMENT SHOP DRAWINGS.

14. INSTALLATION OF REINFORCEMENT SHALL BE COMPLETED AT LEAST 24 HOURS PRIOR TO THE SCHEDULED CONCRETE PLACEMENT. NOTIFY GOVERNMENT OF COMPLETION AT LEAST 24 HOURS PRIOR TO THE SCHEDULED COMPLETION OF THE INSTALLATION OF REINFORCEMENT.

15. FLOOR FLATNESS & LEVELING REQUIREMENTS FOR SLABS ARE INDICATED IN THE PROJECT SPECIFICATIONS.

ABBREVIATIONS

O.C.	ON CENTER
S.O.G.	SLAB ON GRADE
T.O.S.	TOP OF STEEL
U.N.O.	UNLESS NOTED OTHERWISE

MICROPILE NOTES

1. MICROPILE DESIGN AND INSTALLATION SHALL BE IN ACCORDANCE WITH INDUSTRY STANDARDS, THE REQUIREMENTS IN THIS SECTION AND THE SPECIFICATIONS.

2. MICROPILES SHALL EACH HAVE A MINIMUM, SERVICE–LEVEL COMPRESSION AND UPLIFT CAPACITY OF 150 kips.

3. MICROPILES SHALL BE DESIGNED BY THE CONTRACTOR FOR THE LAYOUT AND CAPACITY INDICATED. IF SOIL CONDITIONS OR ECONOMY DICTATE MODIFICATION TO THE LAYOUT, THE GOVERNMENT SHALL APPROVE ANY CHANGES. SHOP DRAWINGS AND CALCULATIONS STAMPED BY A PROFESSIONAL ENGINEER LICENSED IN MAINE SHALL BE SUBMITTED FOR APPROVAL.

4. ANCHORAGE OF MICROPILES TO BUILDING STRUCTURE SHALL BE CAPABLE OF TRANSMITTING THE REACTIONS INDICATED TO THE PILE. ANCHORAGE DETAILS SHALL BE DESIGNED BY THE CONTRACTOR, SCHEMATIC DETAILS ARE SHOWN ON THE DRAWINGS.

FOUNDATION LEGEND

1'–2" SHIELD WALL
9" FROST WALL
6" FROST WALL

DENOTES SPREAD FOOTING WITH (2) ROCK ANCHOR (SEE DETAIL C1/F503)

DENOTES MICROPILE (SEE C5/S502)

REBAR LAP SPLICE TABLE

BAR SIZE	SLABS		BEAM & OTHER	
	TOP BAR	BOTTOM BAR	TOP BAR	BOTTOM BAR
#3	14"	11"	14"	11'
#4	19"	15"	19"	15"
#5	24"	18"	24"	18"
#6	29"	22"	29'	22"
#7	42"	32"	46"	35"
#8	48"	37"	60"	46"
#9	60"	46"	76"	59"
#10	74"	57"	97"	75"
#11	88"	68"	120"	92"

SYM	DESCRIPTION	DATE	APPR
0	ISSUED FOR CONSTRUCTION	10/28/2016	CBC

NAVFAC

STATE OF MAINE
BRIAN J. BEAULIEU
No. 12004
LICENSED PROFESSIONAL ENGINEER
10/28/16
SEAL

Colby Company engineering
A/E INFO

APPROVED
David W. Grunfeld
FOR COMMANDER NAVFAC

ACTIVITY
TIM FISHER
C. 2370.6 BRANCH HEAD

SATISFACTORY TO DATE 10/28/2016
DES SJT DRW ERB CHK CBC
PMDM PETER STOCKLESS
BRANCH MANAGER IAN BODWELL
FEA/PM&E AMIN BAHROUR
FIRE PROTECTION PATRICK BAKAJ

DEPARTMENT OF THE NAVY
NAVAL FACILITIES ENGINEERING COMMAND
PUBLIC WORKS DEPARTMENT - MAINE
NAVAL FACILITIES ENGINEERING COMMAND ~ MID-ATLANTIC
NAVAL SHIPYARD - PORTSMOUTH, NH
PORTSMOUTH NAVAL SHIPYARD
KITTERY, ME
DRY DOCK #1 DEFUELING COMPLEX
SITE & FOUNDATIONS
FOUNDATION NOTES

EPROJECT NO.: 1363311
CONSTR. CONTR. NO. N40085-17-C-5002
NAVFAC DRAWING NO. 12734751
SHEET 14 OF 46
F-001 DD1-16-832

DRAWFORM REVISION: 10 OCTOBER 2014

10/28/2016 7:49:59 AM X:\297 PORTSMOUTH NAVAL SHIPYARD\297.005.001 - DD#1 DEFUELING COMPLEX DESIGN\DRAWINGS\SITE - FOUNDATIONS\SHEETS\F-001.DWG

NOTES

1. SEE F-001 FOR FOUNDATION NOTES.

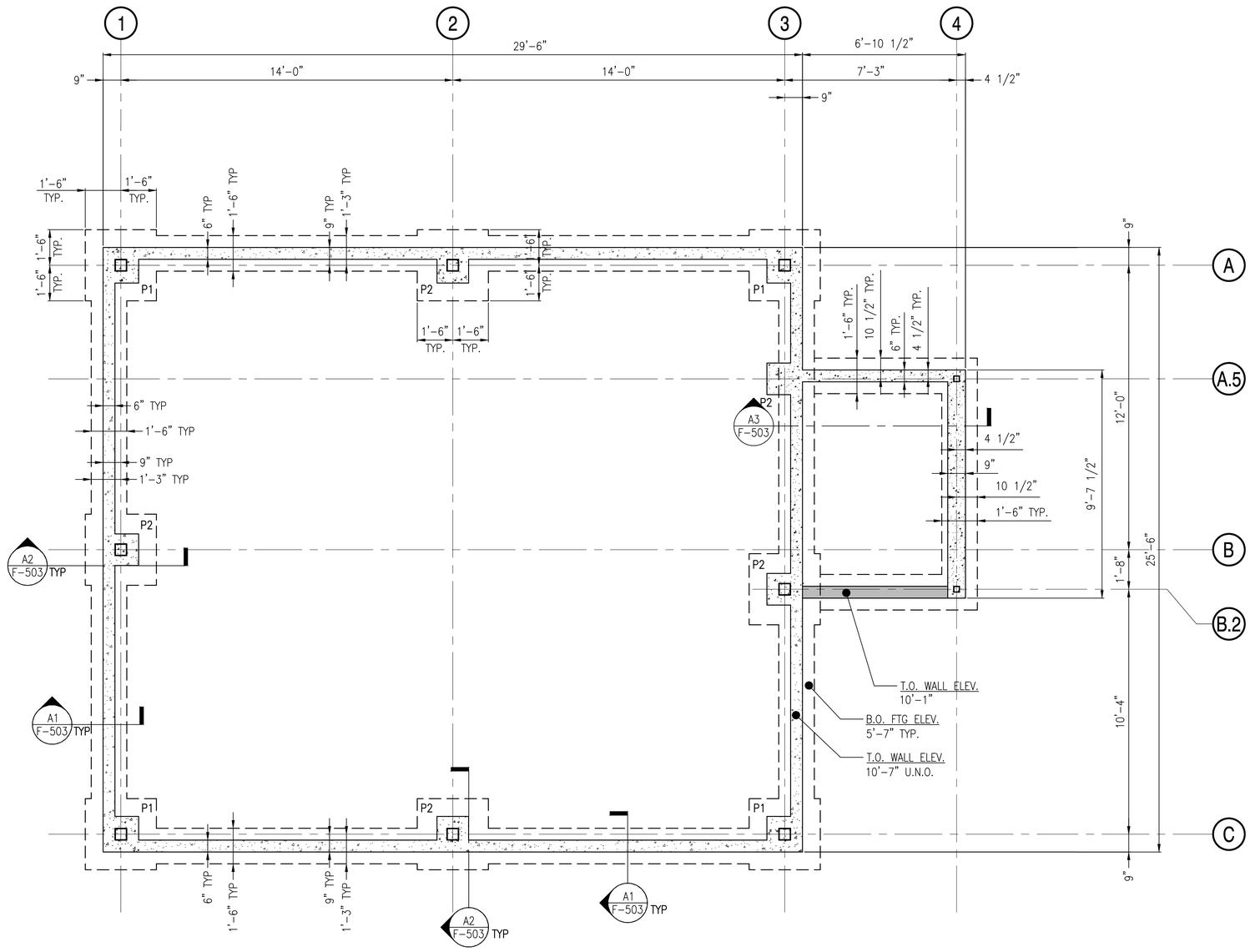

ACE-3 FOUNDATION PLAN

SCALE: 3/8" = 1'-0"

PLAN NORTH

SYM	DESCRIPTION	DATE	APPR
0	ISSUED FOR CONSTRUCTION	10/28/2016	CBC

NAVFAC

STATE OF MAINE
BRIAN J. BEAULIEU
No. 12004
LICENSED
PROFESSIONAL ENGINEER
10/28/16
SEAL

Colby Company engineering
A/E INFO

APPROVED
David W. Grunfeld
FOR COMMANDER NAVFAC

ACTIVITY
TIM FISHER
C. 2370.6 BRANCH HEAD

SATISFACTORY TO DATE 10/28/2016

DES BJB DRW ERB CHK CBC

PMDM PETER STOCKLESS
BRANCH MANAGER IAN BODWELL
FEA/PM&E AMIN BAHROUR
FIRE PROTECTION PATRICK BAKAJ

DEPARTMENT OF THE NAVY
NAVAL FACILITIES ENGINEERING COMMAND
PUBLIC WORKS DEPARTMENT, MAINE

NAVAL FACILITIES ENGINEERING COMMAND ~ MID-ATLANTIC
NAVAL SHIPYARD, PORTSMOUTH, NH

PORTSMOUTH NAVAL SHIPYARD
KITTERY, ME

DRY DOCK #1 DEFUELING COMPLEX
SITE & FOUNDATIONS

ACE-3 FOUNDATION PLAN

EPROJECT NO.: 1363311

CONSTR. CONTR. NO.
N40085-17-C-5002

NAVFAC DRAWING NO.
12734752

SHEET 15 OF 46

F-100 DD1-16-833

DRAWFORM REVISION: 10 OCTOBER 2014

10/28/2016 7:50:11 AM X:\297 PORTSMOUTH NAVAL SHIPYARD\297.005.001 - DD#1 DEFUELING COMPLEX DESIGN\DRAWINGS\SITE - FOUNDATIONS\SHEETS\F-100.DWG

NOTES

1. SEE F-001 FOR FOUNDATION NOTES.
2. ENSURE GRATING SECTIONS PERMIT REMOVAL FOR MAINTENANCE OF WALKOFF MAT AFTER TURNSTILE INSTALLATION.

LEGEND

CJ – DENOTES CONTROL JOINT

⟷ – INDICATES SPAN DIRECTION OF 1 1/4"x3/16" 19-SG-4 REMOVABLE ALUMINUM BAR GRATING

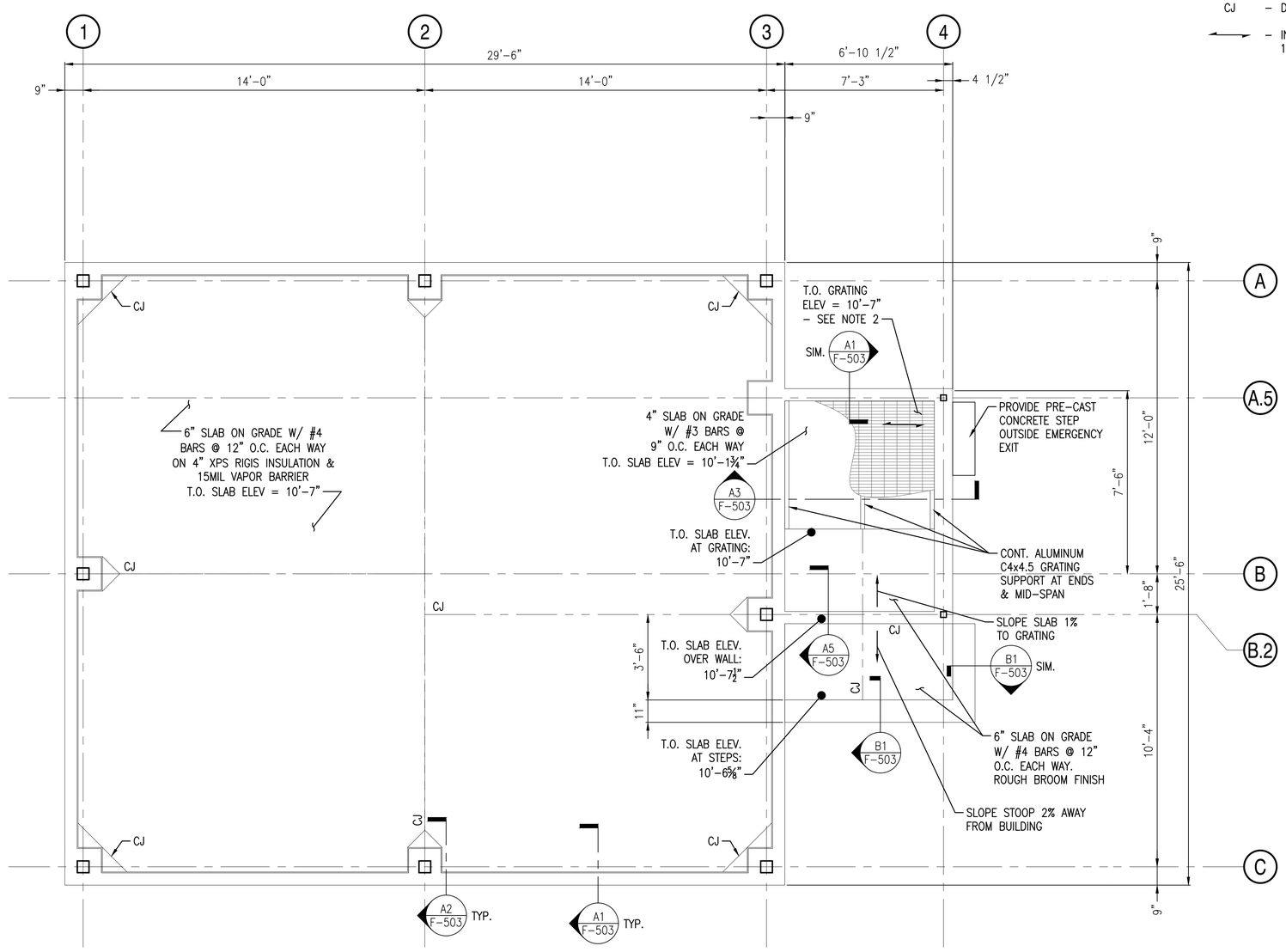

ACE-3 SLAB PLAN

SCALE: 3/8" = 1'-0"

PLAN NORTH

SYM	DESCRIPTION	DATE	APPR
0	ISSUED FOR CONSTRUCTION	10/28/2016	CBC

NAVFAC

STATE OF MAINE — BRIAN J. BEAULIEU No. 12004 — LICENSED PROFESSIONAL ENGINEER — 10/28/16 — SEAL

Colby Company engineering — A/E INFO

APPROVED: David W. Grunfeld — FOR COMMANDER NAVFAC

ACTIVITY: TIM FISHER, C. 2370.6 BRANCH HEAD

SATISFACTORY TO DATE 10/28/2016

DES BJB | DRW ERB | CHK CBC

PM/DM: PETER STOCKLESS

BRANCH MANAGER: IAN BODWELL

FEAD/PM&E: AMIN BAHROUR

FIRE PROTECTION: PATRICK BAKAJ

DEPARTMENT OF THE NAVY
NAVAL FACILITIES ENGINEERING COMMAND
PUBLIC WORKS DEPARTMENT - MAINE

NAVAL FACILITIES ENGINEERING COMMAND ~ MID-ATLANTIC
NAVAL SHIPYARD - PORTSMOUTH, NH

PORTSMOUTH NAVAL SHIPYARD — KITTERY, ME

DRY DOCK #1 DEFUELING COMPLEX
SITE & FOUNDATIONS

ACE-3 SLAB PLAN

EPROJECT NO.: 1363311

CONSTR. CONTR. NO.: N40085-17-C-5002

NAVFAC DRAWING NO.: 12734753

SHEET 16 OF 46

F-101 | DD1-16-834

DRAWFORM REVISION: 10 OCTOBER 2014

10/28/2016 7:50:22 AM X:\297 PORTSMOUTH NAVAL SHIPYARD\297.005.001 - DD#1 DEFUELING COMPLEX DESIGN\DRAWINGS\SITE - FOUNDATIONS\SHEETS\F-101.DWG

NOTES

1. SEE SHEET F-001 FOR FOUNDATION NOTES
2. REFER TO SHEET F-102A FOR ESTIMATED BEDROCK ELEVATIONS

LEGEND

• • DENOTES ROCK ANCHORS (SEE DETAIL C1/F503) TOTAL WORKING LOAD = 75 KIPS

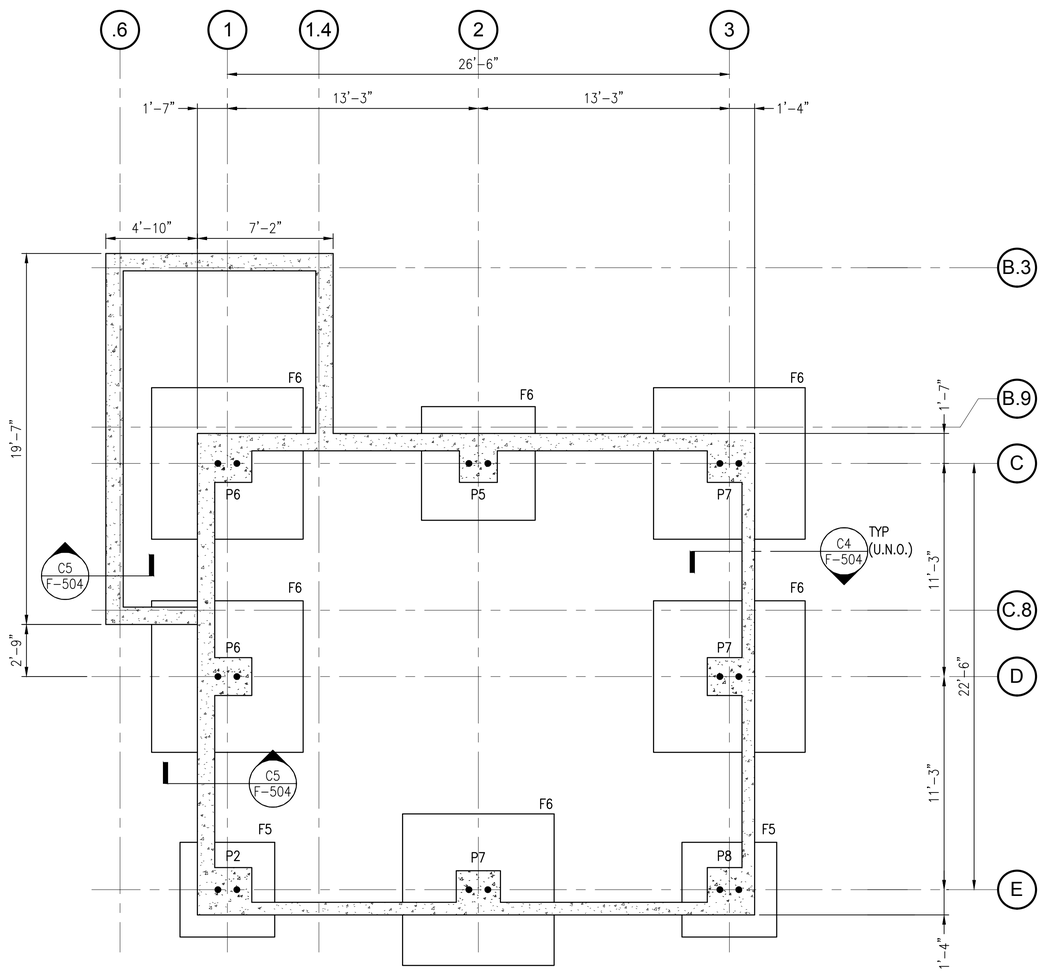

DRE-7 FOUNDATION PLAN - WITHOUT STORAGE ENCLOSURE

SCALE: 1/4" = 1'-0"

PLAN NORTH

Scale: 1/4" = 1'-0"

SYM	DESCRIPTION	DATE	APPR
0	ISSUED FOR CONSTRUCTION	10/28/2016	CBC

NAVFAC

STATE OF MAINE
BRIAN J. BEAULIEU
No. 12004
LICENSED
PROFESSIONAL ENGINEER
10/28/16
SEAL

Colby Company engineering
A/E INFO

APPROVED
David W. Grunfeld
FOR COMMANDER NAVFAC

ACTIVITY: TIM FISHER
C. 2370.6 BRANCH HEAD

SATISFACTORY TO: DATE 10/28/2016

DES BJB | DRW ERB | CHK CBC

PMDM: PETER STOCKLESS
BRANCH MANAGER: IAN BODWELL
FEAD/PM&E: AMIN BAHROUR
FIRE PROTECTION: PATRICK BAKAJ

DEPARTMENT OF THE NAVY
NAVAL FACILITIES ENGINEERING COMMAND
PUBLIC WORKS DEPARTMENT - MAINE

NAVAL FACILITIES ENGINEERING COMMAND ~ MID-ATLANTIC
NAVAL SHIPYARD - PORTSMOUTH, NH

PORTSMOUTH NAVAL SHIPYARD
KITTERY, ME
DRY DOCK #1 DEFUELING COMPLEX
SITE & FOUNDATIONS

DRE-7 FOUNDATION PLAN - WITHOUT STORAGE ENCLOSURE

EPROJECT NO.: 1363311

CONSTR. CONTR. NO.
N40085-17-C-5002

NAVFAC DRAWING NO.
12734754

SHEET 17 OF 46

F-102 | DD1-16-835

DRAWFORM REVISION: 10 OCTOBER 2014

10/28/2016 7:50:33 AM X:\297 PORTSMOUTH NAVAL SHIPYARD\297.005.001 - DD#1 DEFUELING COMPLEX DESIGN\DRAWINGS\SITE - FOUNDATIONS\SHEETS\F-102.DWG

NOTES

1. SEE SHEET F-001 FOR FOUNDATION NOTES.
2. AT APPROXIMATE LOCATIONS NOTED BLOCKOUTS FOR ELECTRICAL CONDUIT/DUCT BANKS WILL BE REQUIRED IN THE FOUNDATION WALL.THE DETAILS AND LOCATIONS OF THESE BLOCKOUTS WILL BE DETERMINED BETWEEN DRAWING ISSUE AND CONSTRUCTION.

LEGEND

• • DENOTES ROCK ANCHORS
TOTAL WORKING LOAD = 75 KIPS
(SEE DETAIL C1/F503)

EL +XX DENOTES ESTIMATED ELEVATION TO BEDROCK.
FOR BIDDING PURPOSES ONLY.
NOT FOR CONSTRUCTION PURPOSES.

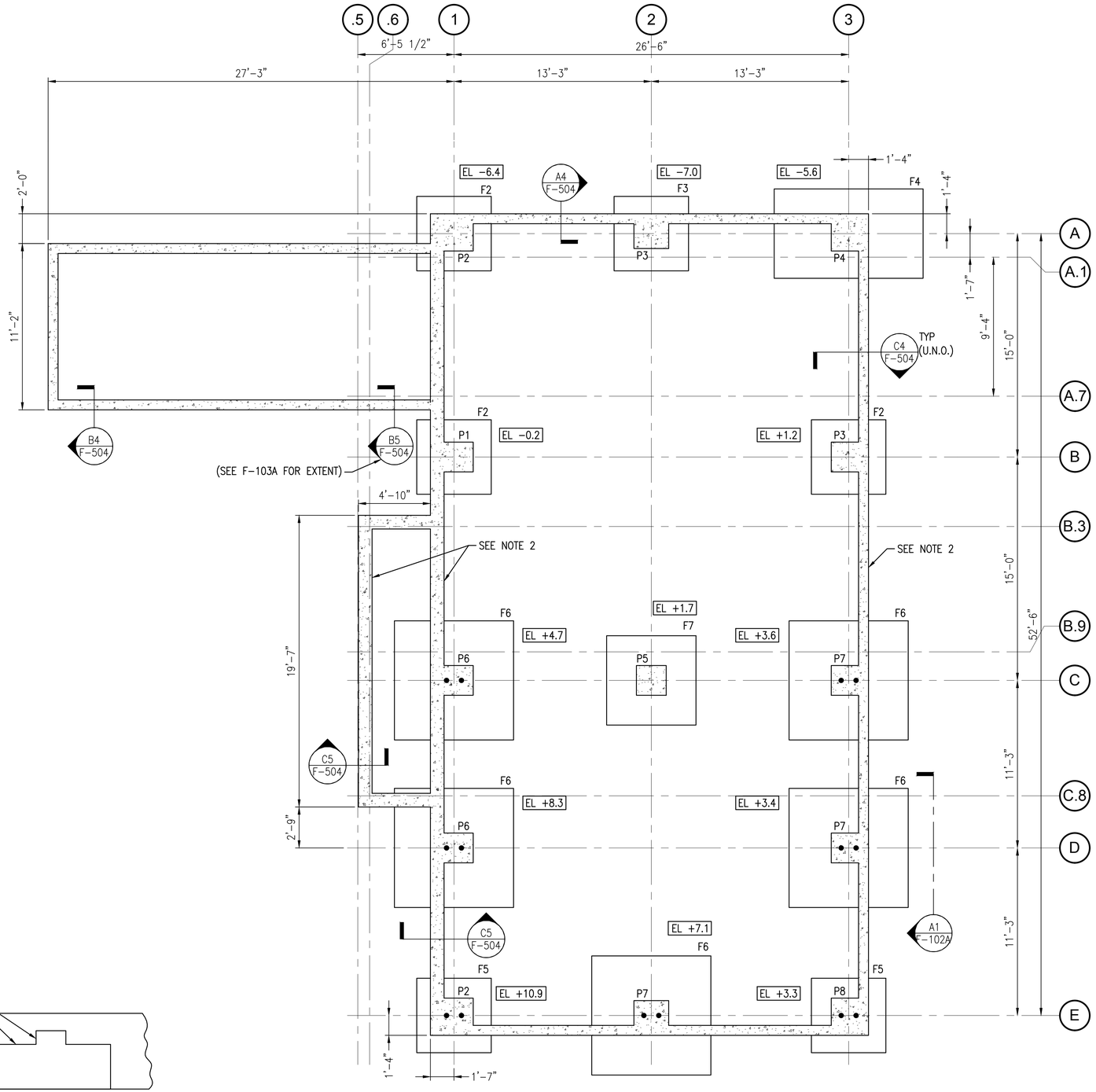

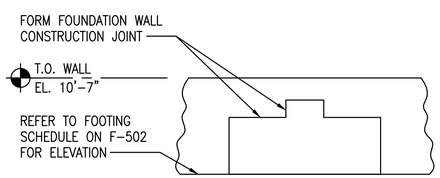

TYP. FOUNDATION WALL AT PIER DETAIL (A1)

SCALE: 1/4" = 1'-0" F-102A

DRE-7 FOUNDATION PLAN

SCALE: 1/4" = 1'-0"

PLAN NORTH

Scale: 1/4" = 1'-0"

SYM	DESCRIPTION	DATE	APPR
0	ISSUED FOR CONSTRUCTION	10/28/2016	CBC

NAVFAC

STATE OF MAINE
BRIAN J. BEAULIEU
No. 12004
LICENSED
PROFESSIONAL ENGINEER
10/28/16
SEAL

Colby Company engineering
A/E INFO

APPROVED
David W. Grunfeld
FOR COMMANDER NAVFAC

ACTIVITY
TIM FISHER
C. 2370.6 BRANCH HEAD

SATISFACTORY TO DATE 10/28/2016

DES BJB | DRW ERB | CHK CBC

PM/DM PETER STOCKLESS
BRANCH MANAGER IAN BODWELL
FEAD/PM&E AMIN BAHROUR
FIRE PROTECTION PATRICK BAKAJ

DEPARTMENT OF THE NAVY
NAVAL FACILITIES ENGINEERING COMMAND
PUBLIC WORKS DEPARTMENT - MAINE
NAVAL FACILITIES ENGINEERING COMMAND ~ MID-ATLANTIC
NAVAL SHIPYARD - PORTSMOUTH, NH
PORTSMOUTH NAVAL SHIPYARD
KITTERY, ME
DRY DOCK #1 DEFUELING COMPLEX
SITE & FOUNDATIONS
DRE-7 FOUNDATION PLAN

EPROJECT NO.: 1363311
CONSTR. CONTR. NO. N40085-17-C-5002
NAVFAC DRAWING NO. 12734755
SHEET 18 OF 46

F-102A | DD1-16-836

DRAWFORM REVISION: 10 OCTOBER 2014

10/28/2016 7:50:43 AM X:\297 PORTSMOUTH NAVAL SHIPYARD\297.005.001 - DD#1 DEFUELING COMPLEX DESIGN\DRAWINGS\SITE - FOUNDATION\SHEETS\F-102A.DWG

NOTES

1. SEE SHEET F-001 FOR FOUNDATION NOTES

LEGEND

CJ – DENOTES CONTROL JOINT
IJ – DENOTES ISOLATION JOINT

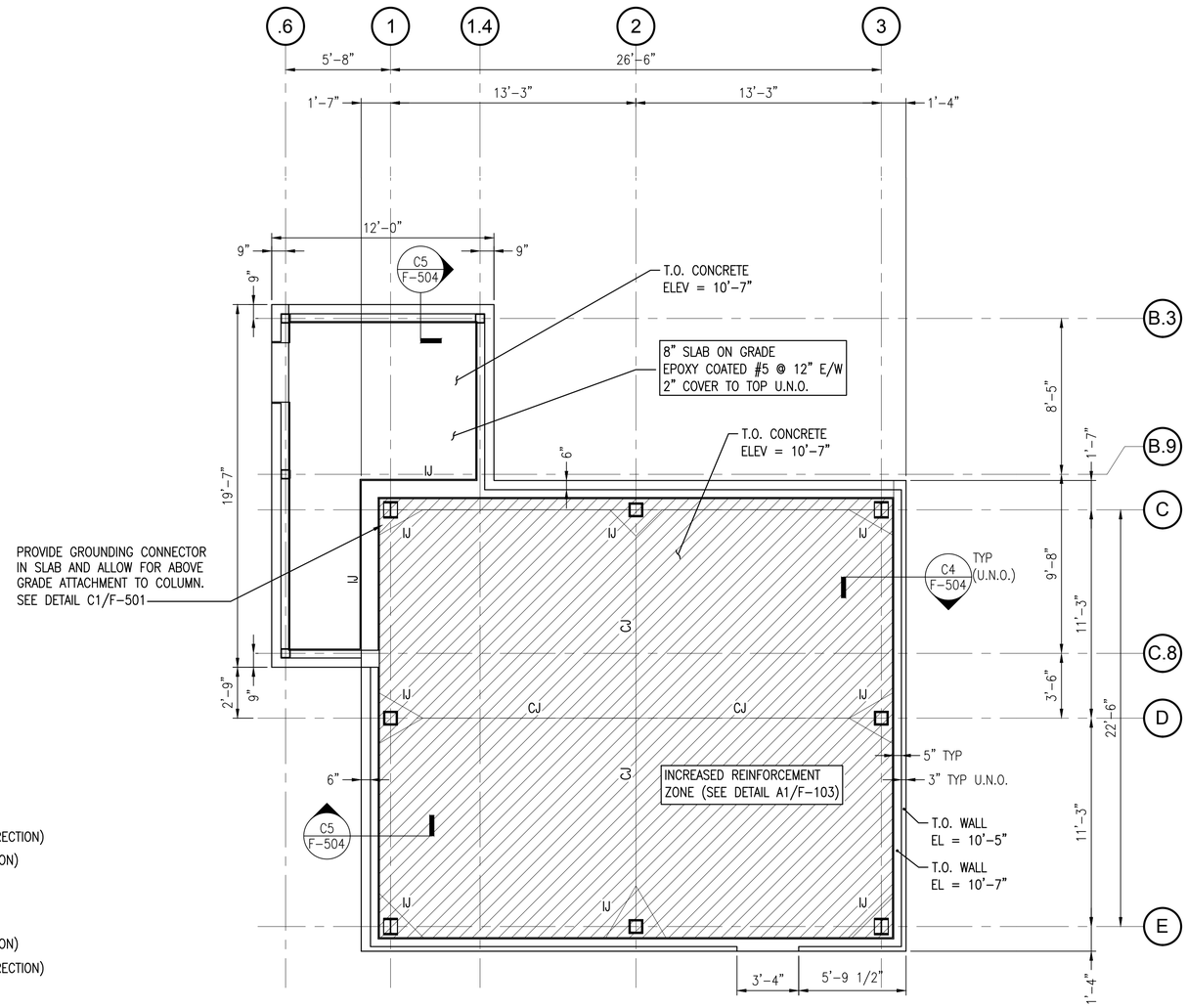

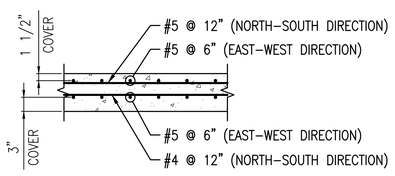

INCREASED SLAB REINFORCEMENT ZONE DETAIL (A1)

SCALE: 3/4" = 1'-0"

F-103

DRE-7 SLAB PLAN - WITHOUT STORAGE ENCLOSURE

SCALE: 1/4" = 1'-0"

PLAN NORTH

0 2' 4' 8'
Scale: 1/4" = 1'-0"

SYM	DESCRIPTION	DATE	APPR
0	ISSUED FOR CONSTRUCTION	10/28/2016	CBC

NAVFAC

STATE OF MAINE
BRIAN J. BEAULIEU
No. 12004
LICENSED
PROFESSIONAL ENGINEER
10/28/16
SEAL

Colby Company engineering
A/E INFO

APPROVED
David W. Grunfeld
FOR COMMANDER NAVFAC

ACTIVITY
TIM FISHER
C. 2370.6 BRANCH HEAD

SATISFACTORY TO DATE 10/28/2016
DES DS DRW ERB CHK CBC
PMDM PETER STOCKLESS
BRANCH MANAGER IAN BODWELL
FEADPM&E AMIN BAHROUR
FIRE PROTECTION PATRICK BAKAJ

DEPARTMENT OF THE NAVY
NAVAL FACILITIES ENGINEERING COMMAND
PUBLIC WORKS DEPARTMENT, MAINE
NAVAL FACILITIES ENGINEERING COMMAND ~ MID-ATLANTIC
NAVAL SHIPYARD, PORTSMOUTH, NH
PORTSMOUTH NAVAL SHIPYARD
KITTERY, ME
DRY DOCK #1 DEFUELING COMPLEX
SITE & FOUNDATIONS
DRE-7 SLAB PLAN – WITHOUT STORAGE ENCLOSURE

EPROJECT NO.: 1363311
CONSTR. CONTR. NO. N40085-17-C-5002
NAVFAC DRAWING NO. 12734756
SHEET 19 OF 46
F-103 DD1-16-837

DRAWFORM REVISION: 10 OCTOBER 2014

10/28/2016 7:50:54 AM X:\297 PORTSMOUTH NAVAL SHIPYARD\297.005.001 - DD#1 DEFUELING COMPLEX DESIGN\DRAWINGS\SITE - FOUNDATIONS\SHEETS\F-103.DWG

NOTES

1. SEE SHEET F-001 FOR FOUNDATION NOTES.
2. SEE PLAN FOR APPROXIMATE LOCATION OF EYE BOLTS. SEE DETAIL A5 THIS SHEET FOR ARRANGEMENT. FINAL LOCATION OF EYE BOLT TO BE DETERMINED BY THE GOVERNMENT.

LEGEND

CJ – DENOTES CONTROL JOINT
IJ – DENOTES ISOLATION JOINT

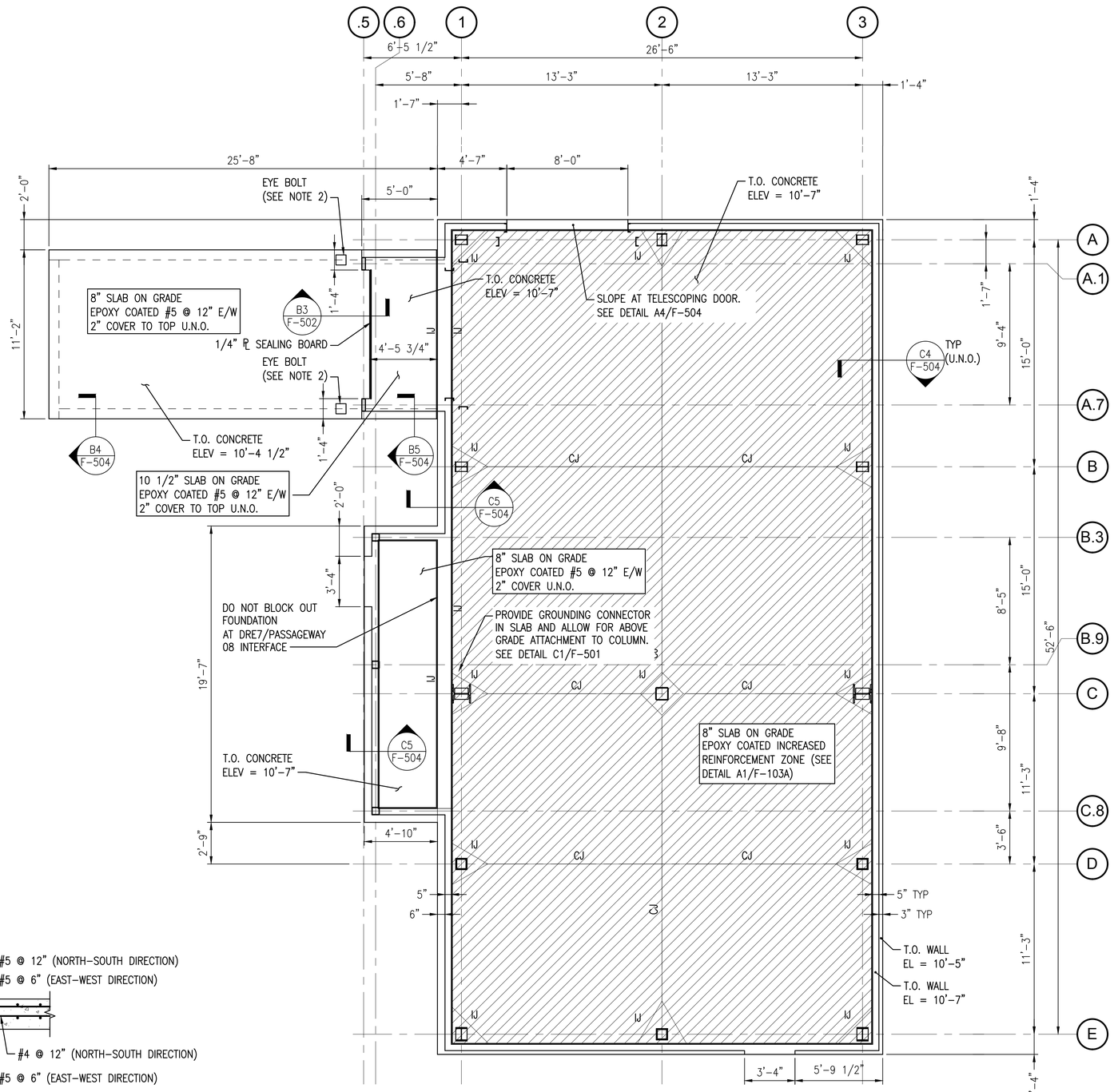

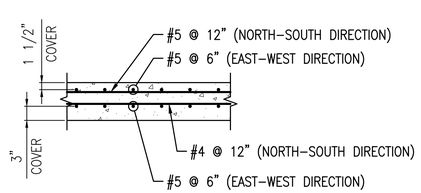

INCREASED SLAB REINFORCEMENT ZONE DETAIL

SCALE: 3/4" = 1'-0" F-103A (A1)

DRE-7 SLAB PLAN

SCALE: 1/4" = 1'-0"

PLAN NORTH

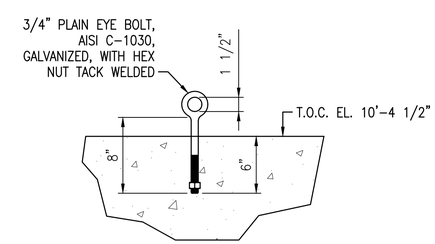

EYE BOLT DETAIL

SCALE: 1 1/2" = 1'-0" F-103A (A5)

(SEE PLAN FOR APPROXIMATE LOCATION)

0 2' 4' 8'
Scale: 1/4" = 1'-0"

SYM	DESCRIPTION	DATE	APPR
0	ISSUED FOR CONSTRUCTION	10/28/2016	CBC

NAVFAC

STATE OF MAINE
BRIAN J. BEAULIEU
No. 12004
LICENSED PROFESSIONAL ENGINEER
10/28/16
SEAL

Colby Company engineering
A/E INFO

APPROVED
David W. Grunfeld
FOR COMMANDER NAVFAC

ACTIVITY
TIM FISHER
C. 2370.6 BRANCH HEAD

SATISFACTORY TO DATE 10/28/2016
DES DS DRW ERB CHK CBC
PM/DM PETER STOCKLESS
BRANCH MANAGER IAN BODWELL
FEAD/PM&E AMIN BAHROUR
FIRE PROTECTION PATRICK BAKAJ

DEPARTMENT OF THE NAVY
NAVAL FACILITIES ENGINEERING COMMAND
PUBLIC WORKS DEPARTMENT - MAINE
NAVAL FACILITIES ENGINEERING COMMAND ~ MID-ATLANTIC
NAVAL SHIPYARD - PORTSMOUTH, NH
KITTERY, ME
PORTSMOUTH NAVAL SHIPYARD
DRY DOCK #1 DEFUELING COMPLEX
SITE & FOUNDATIONS
DRE-7 SLAB PLAN

EPROJECT NO.: 1363311
CONSTR. CONTR. NO.: N40085-17-C-5002
NAVFAC DRAWING NO. 12734757
SHEET 20 OF 46
F-103A DD1-16-838

DRAWFORM REVISION: 10 OCTOBER 2014

10/28/2016 7:51:05 AM X:\297 PORTSMOUTH NAVAL SHIPYARD\297.005.001 - DD#1 DEFUELING COMPLEX DESIGN\DRAWINGS\SITE - FOUNDATIONS\SHEETS\F-103A.DWG

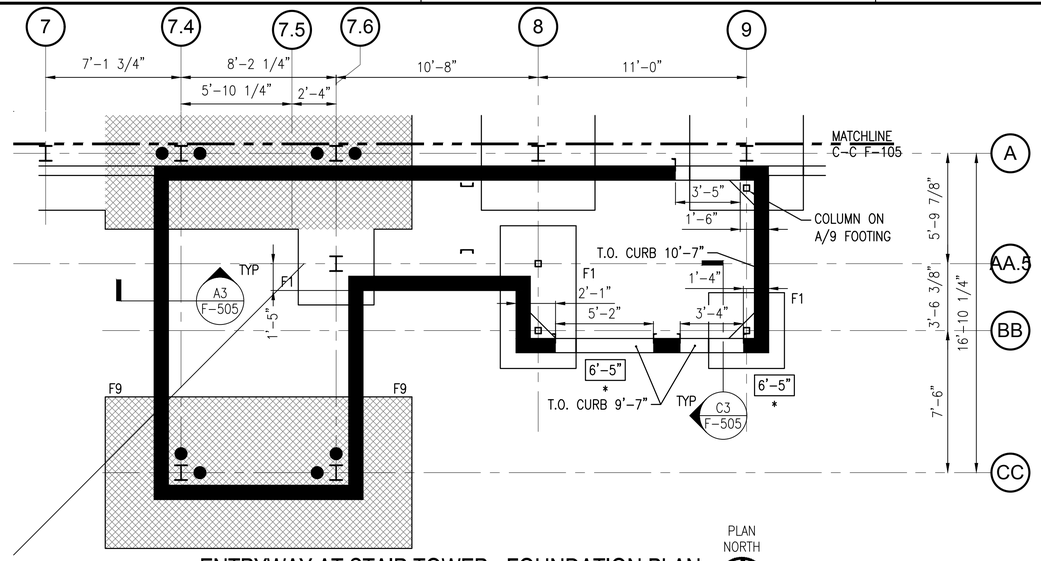

ENTRYWAY AT STAIR TOWER - FOUNDATION PLAN

SCALE: 1/4" = 1'-0"

PLAN NORTH

PROPOSED CONSTRUCTION SEQUENCE – SPREAD FOOTING

1. EXCAVATE TO LEDGE (OR REMOVE LEDGE TO ELEVATIONS INDICATED, IF DEEPER)
2. INSTALL SPECIFIED ROCK ANCHORS (IF REQUIRED)
3. FILL LOW AREAS TO (6'-5") ELEVATION WITH CONTROLLED LOW STRENGTH CEMENTITIOUS FILL/LEAN CONCRETE
4. PLACE ANCHOR RODS/FOOTING REINFORCING

NOTE: IF LEDGE IS NOT ENCOUNTERED ABOVE 0'-0", CONTRACTOR SHALL NOTIFY GOVERNMENT AND PROVIDE OPINION OF PROBABLY COST FOR BOTH SPREAD FOOTING AND MICROPILE OPTIONS AT LOCATION.

NOTES

1. T.O. FOOTING = -1'-2" U.N.O.
2. ALL GRADE BEAMS CENTERED ON COLUMN LINES U.N.O.

FOUNDATION LEGEND

- 1'-2" SHIELD WALL
- 9" FROST WALL
- 6" FROST WALL
- DENOTES SPREAD FOOTING WITH ROCK ANCHOR (SEE DETAIL C1/F503) – TO RESIST 75 KIP UPLIFT SERVICE LOAD
- DENOTES SPREAD FOOTING WITH ROCK ANCHORS (SEE DETAIL C1/F503) – TO RESIST 150 KIPS SERVICE LOAD.
- DENOTES MICROPILE TO BE DESIGNED FOR 150 KIP SERVICE LOAD – TENSION OR COMPRESION (SEE C5/S502)
- [X'-XX"] DENOTES BOTTOM OF FOUNDATION ELEMENT (PILE CAP, GRADE BEAM)
- X'-XX" DENOTES ANTICIPATED LEDGE ELEVATION OR BOTTOM OF FOUNDATION – WHICHEVER IS DEEPER
- * LEDGE AT OR NEAR SURFACE – REMOVAL ANTICIPATED TO INDICATED ELEVATION
- F4 INDICATES FOOTING TYPE – SEE F-502 FOR FOOTING SIZE AND REINFORCING
- JP/JSP INDICATES PAD FOR RAILCAR JACKING – SEE F-511 FOR JACKING PAD AND JACK STAND PAD DETAILS
- PC1 INDICATES PILE CAP TYPE – SEE F-511 FOR PILE CAP DETAILS

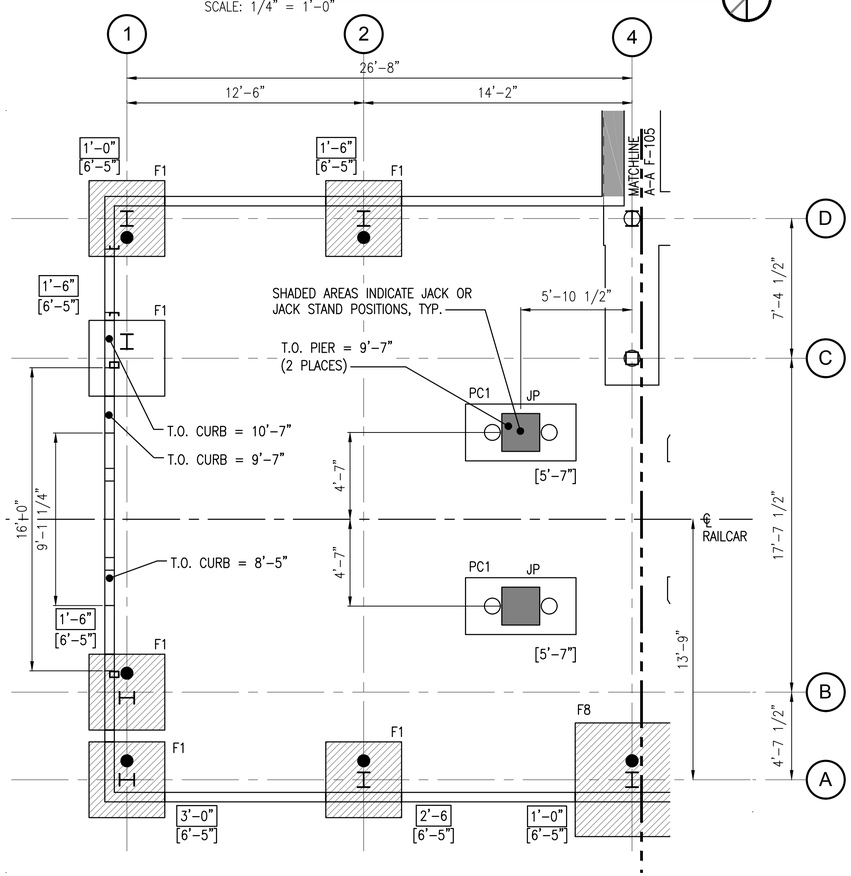

WEST RAILCAR ENCLOSURE - FOUNDATION PLAN

SCALE: 1/4" = 1'-0"

PLAN NORTH

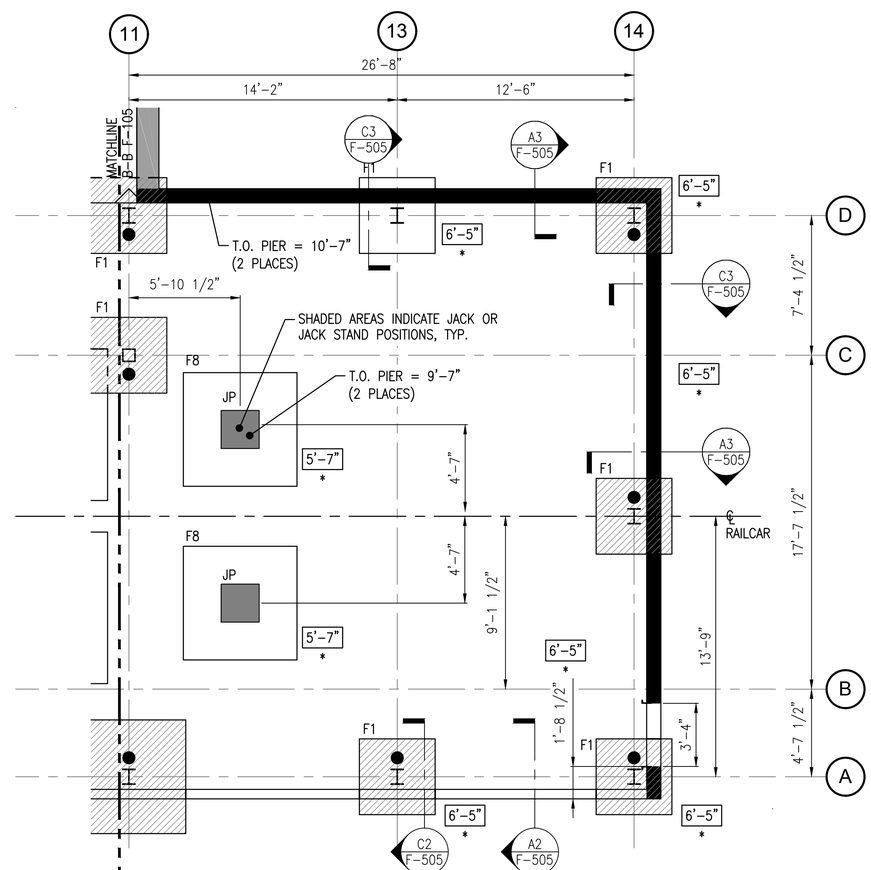

EAST RAILCAR ENCLOSURE - FOUNDATION PLAN

SCALE: 1/4" = 1'-0"

PLAN NORTH

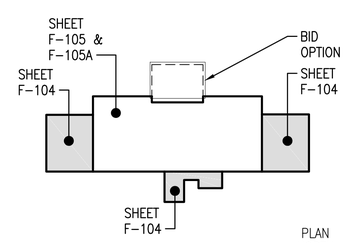

KEYPLAN

SCALE: NTS

PLAN NORTH

0 2' 4' 8'
Scale: 1/4" = 1'-0"

SYM	DESCRIPTION	DATE	APPR
0	ISSUED FOR CONSTRUCTION	10/28/2016	CBC

NAVFAC

STATE OF MAINE
BRIAN J. BEAULIEU
No. 12004
LICENSED PROFESSIONAL ENGINEER
10/28/16
SEAL

Colby Company engineering

A/E INFO

APPROVED
David W. Greenfield
FOR COMMANDER NAVFAC

ACTIVITY
TIM FISHER
C. 2370.6 BRANCH HEAD

SATISFACTORY TO DATE 10/28/2016

DES	SJT	DRW	ERB	CHK	CBC

PM/DM PETER STOCKLESS
BRANCH MANAGER IAN BODWELL
FEAD/PM&E AMIN BAHROUR
FIRE PROTECTION PATRICK BAKAJ

DEPARTMENT OF THE NAVY
NAVAL FACILITIES ENGINEERING COMMAND
PUBLIC WORKS DEPARTMENT - MAINE

NAVAL FACILITIES ENGINEERING COMMAND – MID-ATLANTIC
NAVAL SHIPYARD - PORTSMOUTH, NH

PORTSMOUTH NAVAL SHIPYARD
KITTERY, ME

DRY DOCK #1 DEFUELING COMPLEX
SITE & FOUNDATIONS

M140 FOUNDATION PLAN

EPROJECT NO.: 1363311

CONSTR. CONTR. NO.
N40085-17-C-5002

NAVFAC DRAWING NO.
12734758

SHEET 21 OF 46

F-104 | DD1-16-839

DRAWFORM REVISION: 10 OCTOBER 2014

10/28/2016 7:51:17 AM X:\297 PORTSMOUTH NAVAL SHIPYARD\297.005.001 - DD#1 DEFUELING COMPLEX DESIGN\DRAWINGS\SITE - FOUNDATIONS\SHEETS\F-104.DWG

NOTES

1. SEE SHEET F-001 FOR FOUNDATION NOTES. SEE F-104 FOR ADDITIONAL NOTES, LEGEND AND KEYPLAN. SEE F-502 FOR FOOTING SCHEDULE.

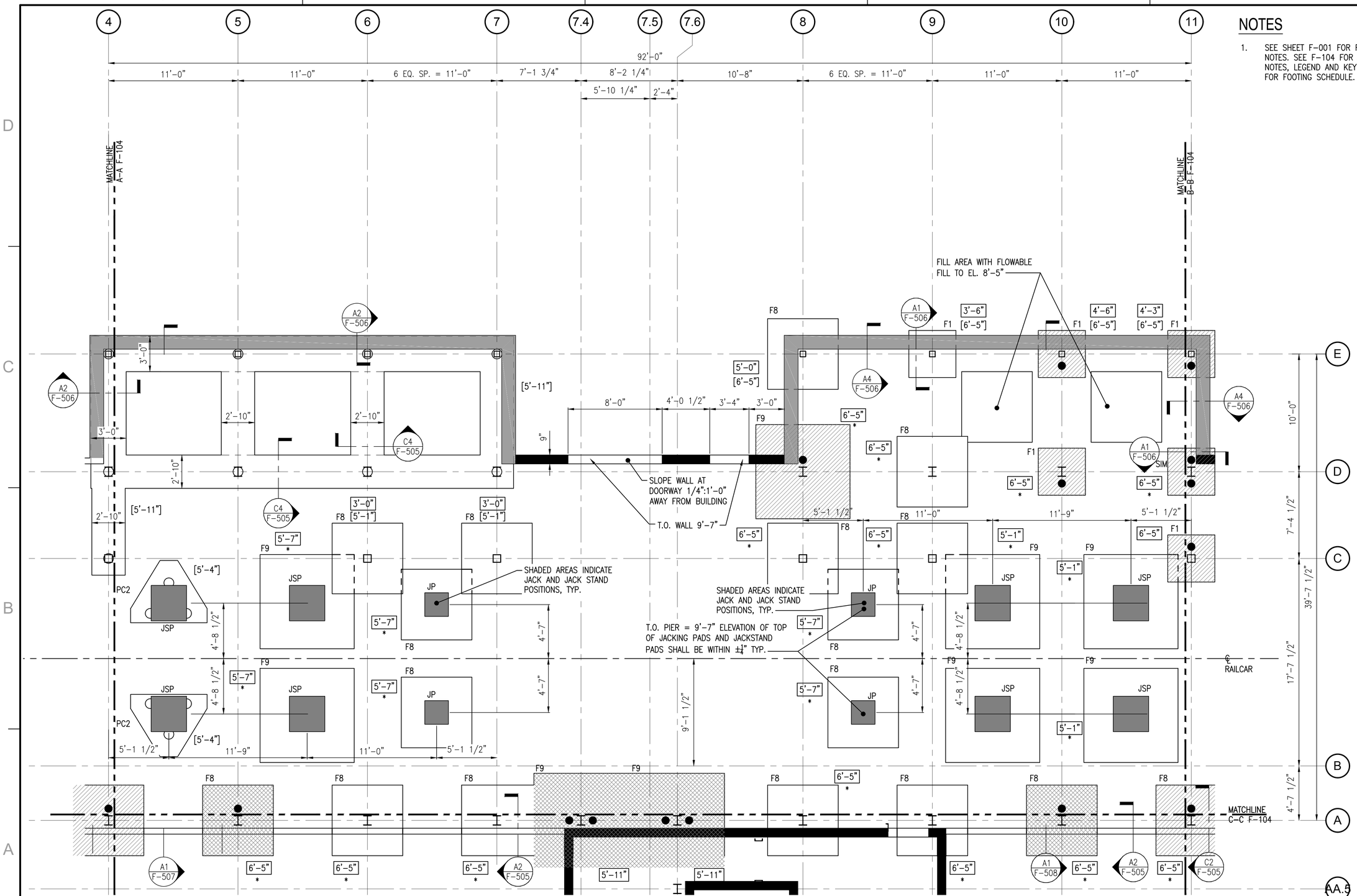

M140 FOUNDATION PLAN - WITHOUT STORAGE ENCLOSURE

SCALE: 1/4" = 1'-0"

PLAN NORTH

Scale: 1/4" = 1'-0"

SYM	DESCRIPTION	DATE	APPR
0	ISSUED FOR CONSTRUCTION	10/28/2016	CBC

NAVFAC

STATE OF MAINE — BRIAN J. BEAULIEU No. 12004 — LICENSED PROFESSIONAL ENGINEER — 10/28/16 — SEAL

Colby Company engineering — A/E INFO

APPROVED: David W. Grunfeld — FOR COMMANDER NAVFAC

ACTIVITY: TIM FISHER, C. 2370.6 BRANCH HEAD

SATISFACTORY TO: DATE 10/28/2016

DES SJT | DRW ERB | CHK CBC

PMDM: PETER STOCKLESS

BRANCH MANAGER: IAN BODWELL

FEA/PM&E: AMIN BAHROUR

FIRE PROTECTION: PATRICK BAKAJ

DEPARTMENT OF THE NAVY — NAVAL FACILITIES ENGINEERING COMMAND — PUBLIC WORKS DEPARTMENT - MAINE

NAVAL FACILITIES ENGINEERING COMMAND ~ MID-ATLANTIC — NAVAL SHIPYARD - PORTSMOUTH, NH

PORTSMOUTH NAVAL SHIPYARD — KITTERY, ME

DRY DOCK #1 DEFUELING COMPLEX SITE & FOUNDATIONS

M140 FOUNDATION PLAN - WITHOUT STORAGE ENCLOSURE

EPROJECT NO.: 1363311

CONSTR. CONTR. NO.: N40085-17-C-5002

NAVFAC DRAWING NO.: 12734759

SHEET 22 OF 46

F-105 | DD1-16-840

DRAWFORM REVISION: 10 OCTOBER 2014

10/28/2016 7:51:29 AM X:\297 PORTSMOUTH NAVAL SHIPYARD\297.005.001 - DD#1 DEFUELING COMPLEX DESIGN\DRAWINGS\SITE - FOUNDATIONS\SHEETS\F-105.DWG

NOTES

1. SEE SHEET F-001 FOR FOUNDATION NOTES. SEE F-104 FOR ADDITIONAL NOTES, LEGEND AND KEYPLAN. SEE F-502 FOR FOOTING SCHEDULE.

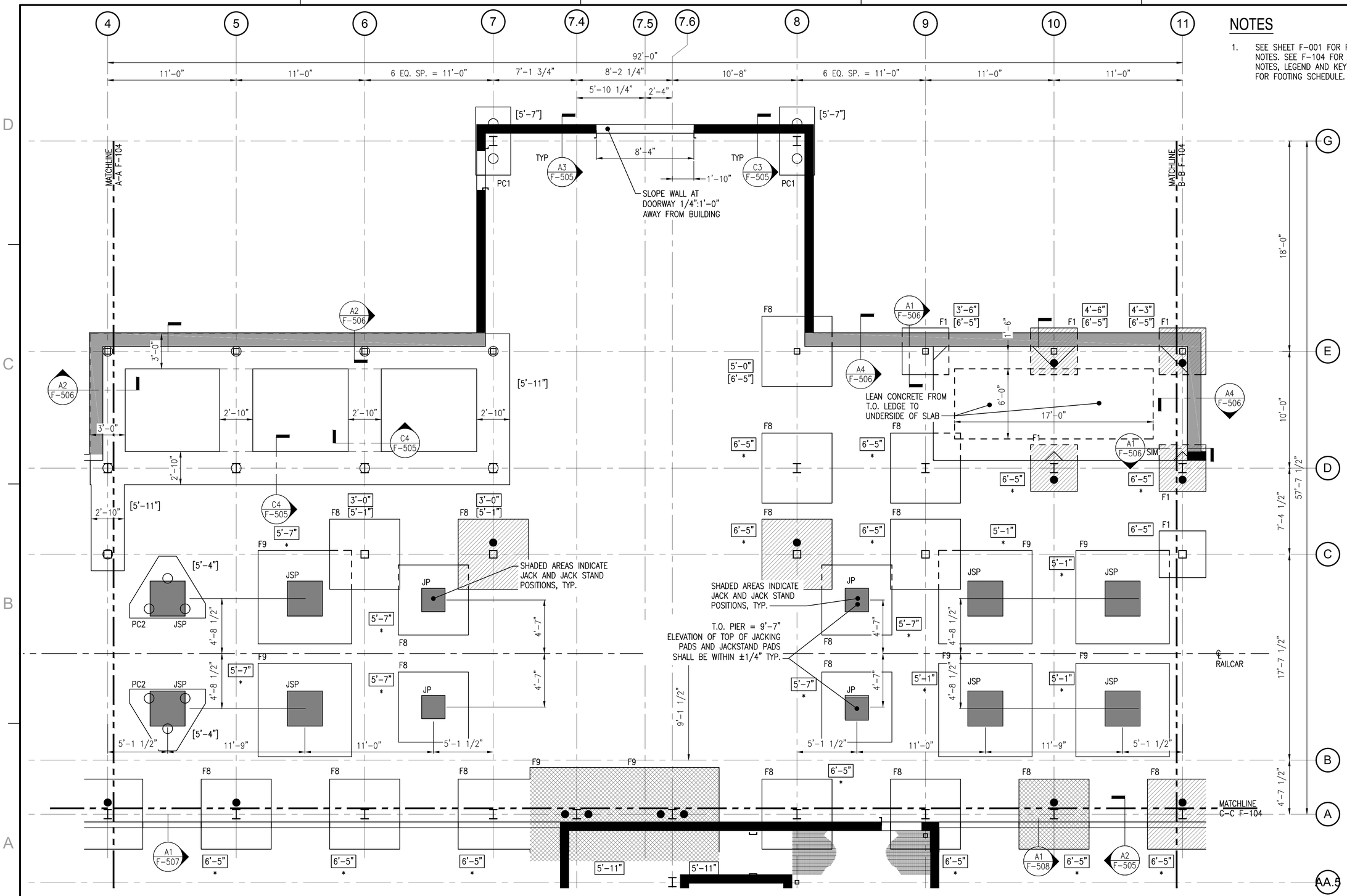

M140 FOUNDATION PLAN

SCALE: 1/4" = 1'-0"

SYM	DESCRIPTION	DATE	APPR
0	ISSUED FOR CONSTRUCTION	10/28/2016	CBC

NAVFAC

STATE OF MAINE — BRIAN J. BEAULIEU No. 12004 — LICENSED PROFESSIONAL ENGINEER — 10/28/16 — SEAL

Colby Company engineering — A/E INFO

APPROVED: David W. Grunfeld — FOR COMMANDER NAVFAC

ACTIVITY: TIM FISHER, C. 2370.6 BRANCH HEAD

SATISFACTORY TO: DATE 10/28/2016

DES SJT | DRW ERB | CHK CBC

PMDM: PETER STOCKLESS

BRANCH MANAGER: IAN BODWELL

FEA/PM&E: AMIN BAHROUR

FIRE PROTECTION: PATRICK BAKAJ

DEPARTMENT OF THE NAVY — NAVAL FACILITIES ENGINEERING COMMAND — PUBLIC WORKS DEPARTMENT - MAINE

NAVAL FACILITIES ENGINEERING COMMAND ~ MID-ATLANTIC — NAVAL SHIPYARD - PORTSMOUTH, NH

PORTSMOUTH NAVAL SHIPYARD — KITTERY, ME

DRY DOCK #1 DEFUELING COMPLEX SITE & FOUNDATIONS

M140 FOUNDATION PLAN

EPROJECT NO.: 1363311

CONSTR. CONTR. NO.: N40085-17-C-5002

NAVFAC DRAWING NO.: 12734760

SHEET 23 OF 46

F-105A | DD1-16-841

DRAWFORM REVISION: 10 OCTOBER 2014

10/28/2016 7:51:40 AM X:\297 PORTSMOUTH NAVAL SHIPYARD\297.005.001 - DD#1 DEFUELING COMPLEX DESIGN\DRAWINGS\SITE - FOUNDATIONS\SHEETS\F-105A.DWG

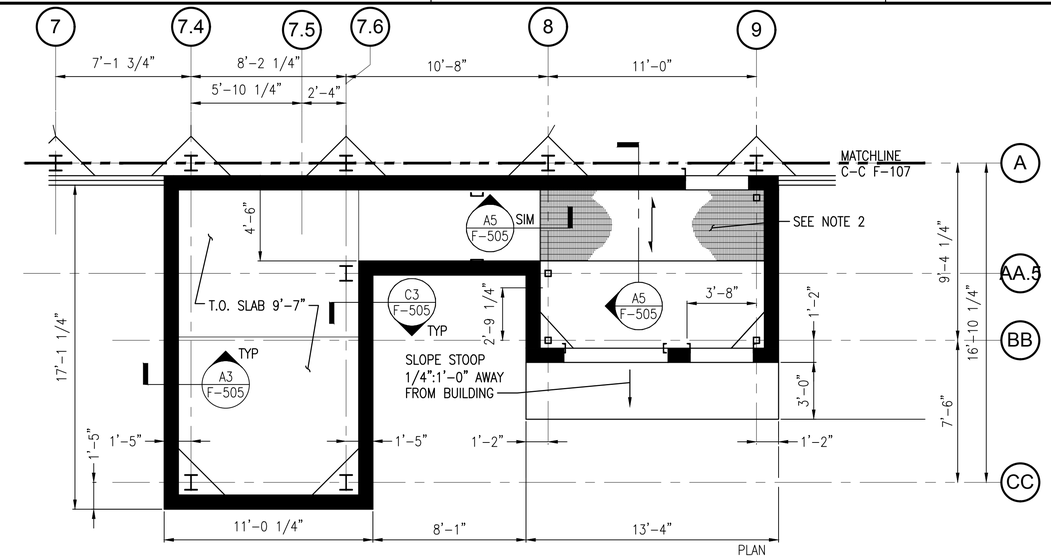

ENTRYWAY AT STAIR TOWER - SLAB PLAN

SCALE: 1/4" = 1'-0"

NOTES

1. T.O. WALL = 10'-7" U.N.O.
2. ENSURE GRATING SECTIONS PERMIT REMOVAL FOR MAINTENANCE OF WALKOFF MAT AFTER TURNSTILE INSTALLATION.

FOUNDATION LEGEND

- 1'-2" SHIELD WALL – T.O. WALL = 17'-7" SEE DETAIL A5/F-509
- 9" FROST WALL – T.O. WALL = 10'-7" SEE DETAIL B1/F-509
- 6" FROST WALL – T.O. WALL = 10'-7" SEE DETAIL B2/F-509
- GRADE BEAM FOR JACKING POINTS AND JACK STANDS
- CJ DENOTES CONTROL JOINT
- INDICATES SPAN DIRECTION OF 1 1/4"x3/16" 19-SG-4 ALUMINUM BAR GRATING

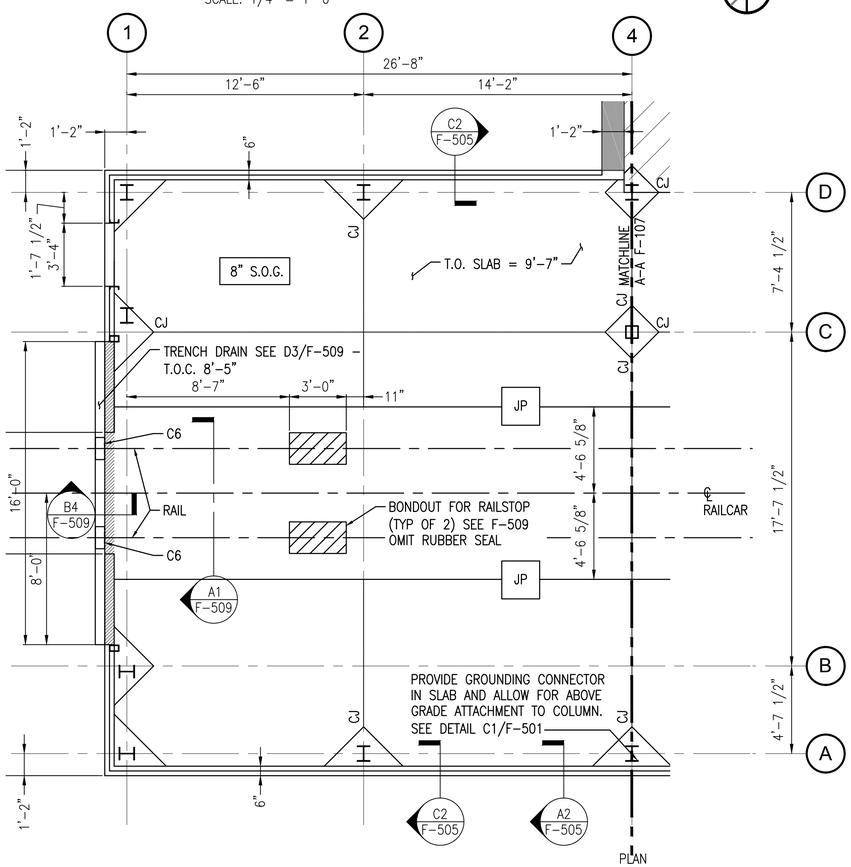

WEST RAILCAR ENCLOSURE - SLAB PLAN

SCALE: 1/4" = 1'-0"

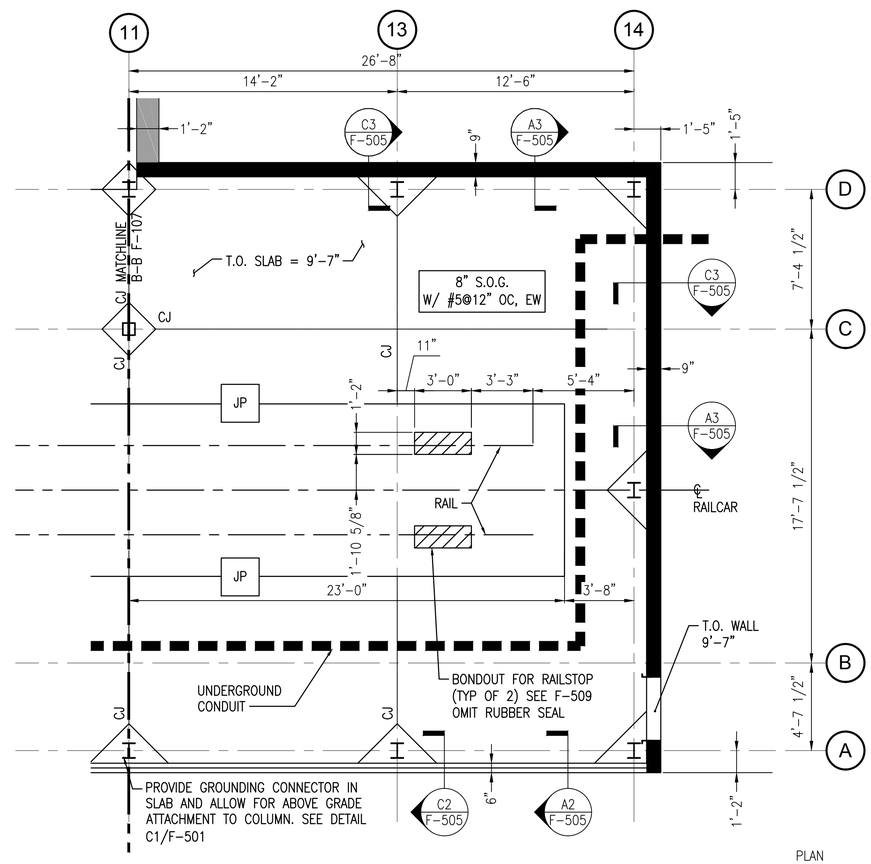

EAST RAILCAR ENCLOSURE - SLAB PLAN

SCALE: 1/4" = 1'-0"

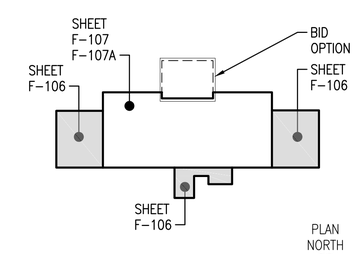

KEYPLAN

SCALE: NTS

0 2' 4' 8'
Scale: 1/4" = 1'-0"

SYM	DESCRIPTION	DATE	APPR
0	ISSUED FOR CONSTRUCTION	10/28/2016	CBC

NAVFAC

STATE OF MAINE
BRIAN J. BEAULIEU
No. 12004
LICENSED
PROFESSIONAL ENGINEER
10/28/16
SEAL

Colby Company engineering
A/E INFO

APPROVED
David W. Grunfeld
FOR COMMANDER NAVFAC

ACTIVITY
TIM FISHER
C. 2370.6 BRANCH HEAD

SATISFACTORY TO DATE 10/28/2016
DES SJT DRW ERB CHK CBC
PMDM PETER STOCKLESS
BRANCH MANAGER IAN BODWELL
FEA/PM&E AMIN BAHROUR
FIRE PROTECTION PATRICK BAKAJ

DEPARTMENT OF THE NAVY
NAVAL FACILITIES ENGINEERING COMMAND ~ MID-ATLANTIC
PUBLIC WORKS DEPARTMENT - MAINE
NAVAL FACILITIES ENGINEERING COMMAND
NAVAL SHIPYARD - PORTSMOUTH, NH
KITTERY, ME
PORTSMOUTH NAVAL SHIPYARD
DRY DOCK #1 DEFUELING COMPLEX
SITE & FOUNDATIONS
M140 SLAB PLAN

EPROJECT NO.: 1363311
CONSTR. CONTR. NO. N40085-17-C-5002
NAVFAC DRAWING NO. 12734761
SHEET 24 OF 46
F-106 DD1-16-842

DRAWFORM REVISION: 10 OCTOBER 2014

10/28/2016 7:51:53 AM X:\297 PORTSMOUTH NAVAL SHIPYARD\297.005.001 - DD#1 DEFUELING COMPLEX DESIGN\DRAWINGS\SITE - FOUNDATIONS\SHEETS\F-106.DWG

NOTES

1. SEE SHEET F-106 FOR FOUNDATION NOTES, LEGEND, AND KEYPLAN.
2. TOP OF ALL JACKING PADS AND JACK STAND PADS TO BE AT 9'-7".

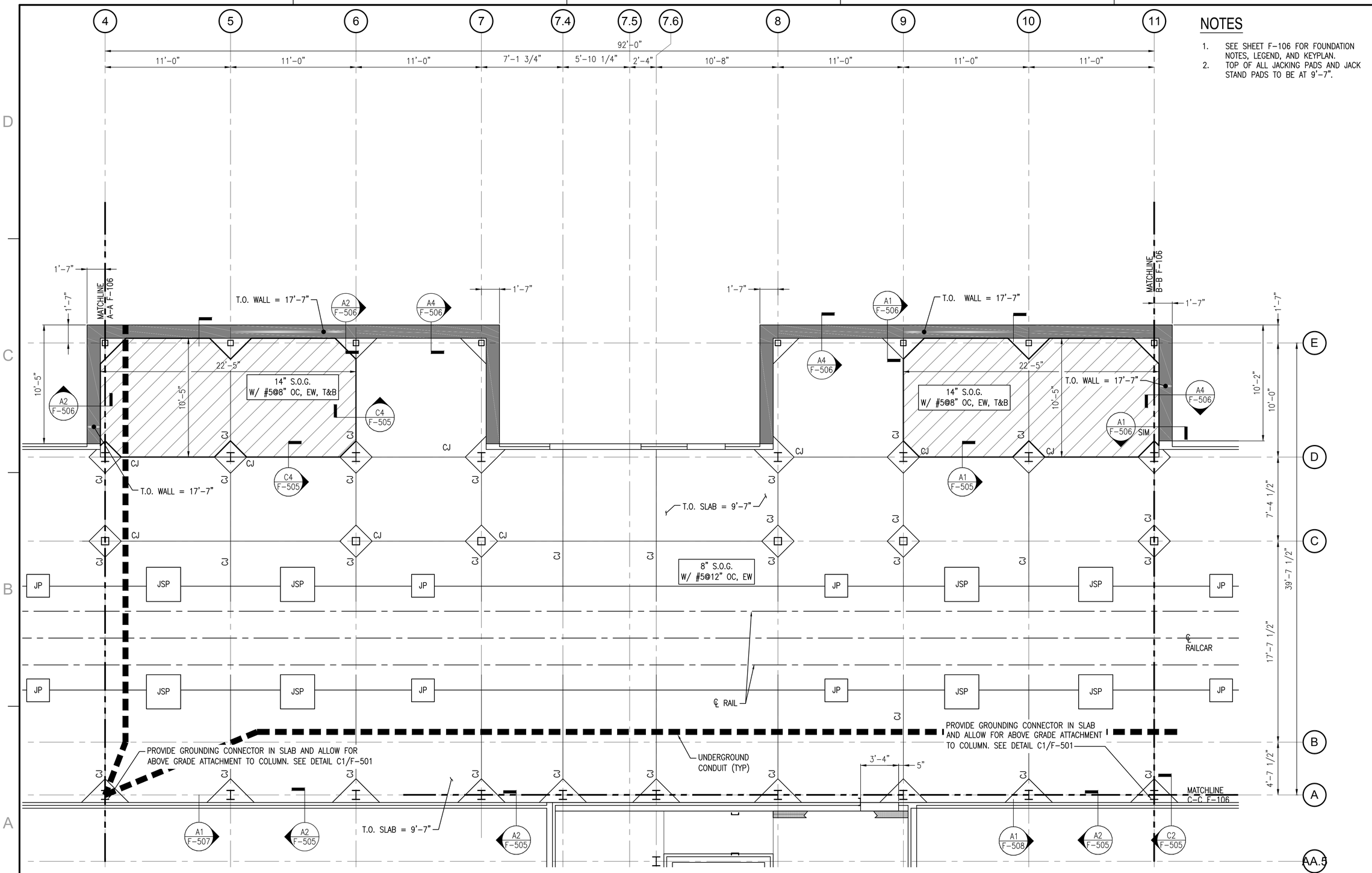

M140 SLAB PLAN - WITHOUT STORAGE ENCLOSURE

SCALE: 1/4" = 1'-0"

PLAN NORTH

Scale: 1/4" = 1'-0"

SYM	DESCRIPTION	DATE	APPR
0	ISSUED FOR CONSTRUCTION	10/28/2016	CBC

NAVFAC

STATE OF MAINE — BRIAN J. BEAULIEU No. 12004 — LICENSED PROFESSIONAL ENGINEER — 10/28/16 — SEAL

Colby Company engineering — A/E INFO

APPROVED: David W. Grunfeld — FOR COMMANDER NAVFAC

ACTIVITY: TIM FISHER, C. 2370.6 BRANCH HEAD

SATISFACTORY TO DATE 10/28/2016

DES SJT | DRW ERB | CHK CBC

PM/DM: PETER STOCKLESS

BRANCH MANAGER: IAN BODWELL

FEAD/PM&E: AMIN BAHROUR

FIRE PROTECTION: PATRICK BAKAJ

DEPARTMENT OF THE NAVY — NAVAL FACILITIES ENGINEERING COMMAND — PUBLIC WORKS DEPARTMENT - MAINE

NAVAL FACILITIES ENGINEERING COMMAND ~ MID-ATLANTIC — NAVAL SHIPYARD - PORTSMOUTH, NH

PORTSMOUTH NAVAL SHIPYARD — KITTERY, ME

DRY DOCK #1 DEFUELING COMPLEX

SITE & FOUNDATIONS

M140 SLAB PLAN - WITHOUT STORAGE ENCLOSURE

EPROJECT NO.: 1363311

CONSTR. CONTR. NO.: N40085-17-C-5002

NAVFAC DRAWING NO.: 12734762

SHEET 25 OF 46

F-107 | DD1-16-843

DRAWFORM REVISION: 10 OCTOBER 2014

10/28/2016 7:52:04 AM X:\297 PORTSMOUTH NAVAL SHIPYARD\297.005.001 - DDH DEFUELING COMPLEX DESIGN\DRAWINGS\SITE - FOUNDATIONS\SHEETS\F-107.DWG

NOTES

1. SEE SHEET F-106 FOR FOUNDATION NOTES, LEGEND, AND KEYPLAN.
2. TOP OF ALL JACKING PADS AND JACK STAND PADS TO BE AT 9'-7".

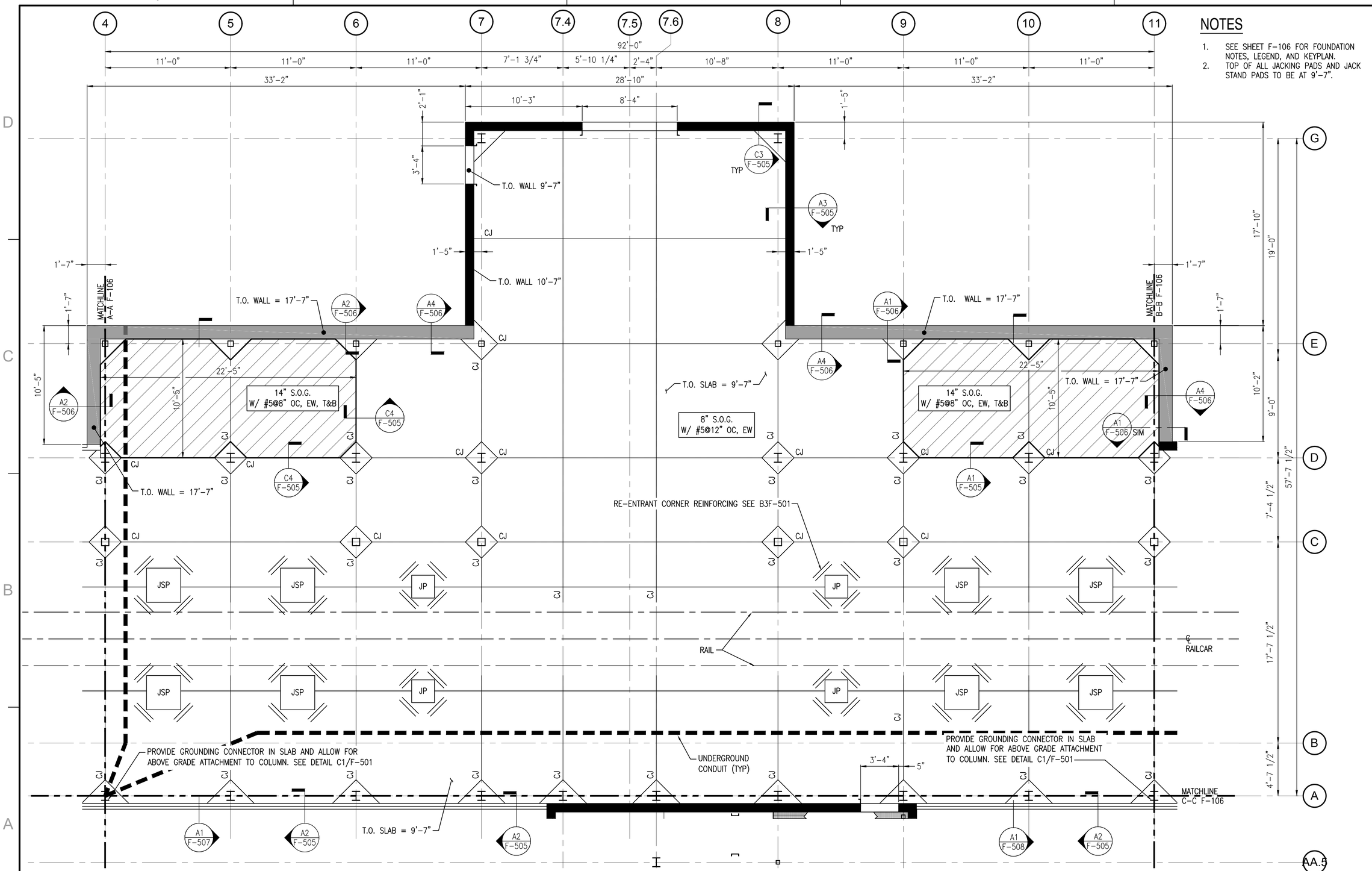

M140 SLAB PLAN

SCALE: 1/4" = 1'-0"

PLAN NORTH

Scale: 1/4" = 1'-0"

SYM	DESCRIPTION	DATE	APPR
0	ISSUED FOR CONSTRUCTION	10/28/2016	CBC

NAVFAC

STATE OF MAINE — BRIAN J. BEAULIEU No. 12004 — LICENSED PROFESSIONAL ENGINEER — 10/28/16 — SEAL

Colby Company engineering

A/E INFO

APPROVED: David W. Grunfeld — FOR COMMANDER NAVFAC

ACTIVITY: TIM FISHER, C. 2370.6 BRANCH HEAD

SATISFACTORY TO DATE 10/28/2016

DES SJT | DRW ERB | CHK CBC

PMOM: PETER STOCKLESS

BRANCH MANAGER: IAN BODWELL

FEAD/PM&E: AMIN BAHROUR

FIRE PROTECTION: PATRICK BAKAJ

DEPARTMENT OF THE NAVY — NAVAL FACILITIES ENGINEERING COMMAND — PUBLIC WORKS DEPARTMENT: MAINE

NAVAL FACILITIES ENGINEERING COMMAND ~ MID-ATLANTIC — NAVAL SHIPYARD: PORTSMOUTH, NH

PORTSMOUTH NAVAL SHIPYARD — KITTERY, ME

DRY DOCK #1 DEFUELING COMPLEX SITE & FOUNDATIONS

M140 SLAB PLAN

EPROJECT NO.: 1363311

CONSTR. CONTR. NO. N40085-17-C-5002

NAVFAC DRAWING NO. 12734763

SHEET 26 OF 46

F-107A | DD1-16-844

DRAWFORM REVISION: 10 OCTOBER 2014

10/28/2016 7:52:16 AM X:\297 PORTSMOUTH NAVAL SHIPYARD\297.005.001 - DD#1 DEFUELING COMPLEX DESIGN\DRAWINGS\SITE - FOUNDATIONS\SHEETS\F-107A.DWG

NOTE:

* COLUMN GRID LINES REFERENCED FROM VOLUME 2 DRAWINGS.

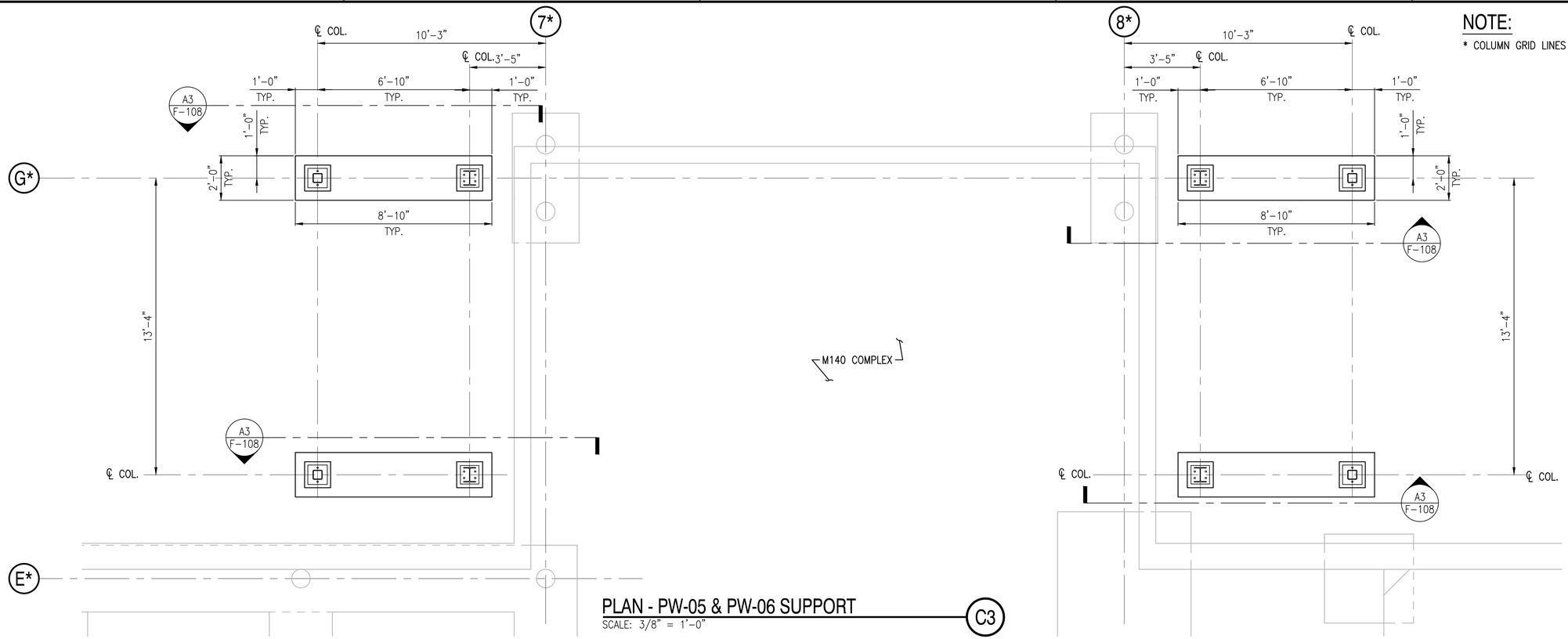

PLAN - PW-05 & PW-06 SUPPORT (C3)

SCALE: 3/8" = 1'-0"

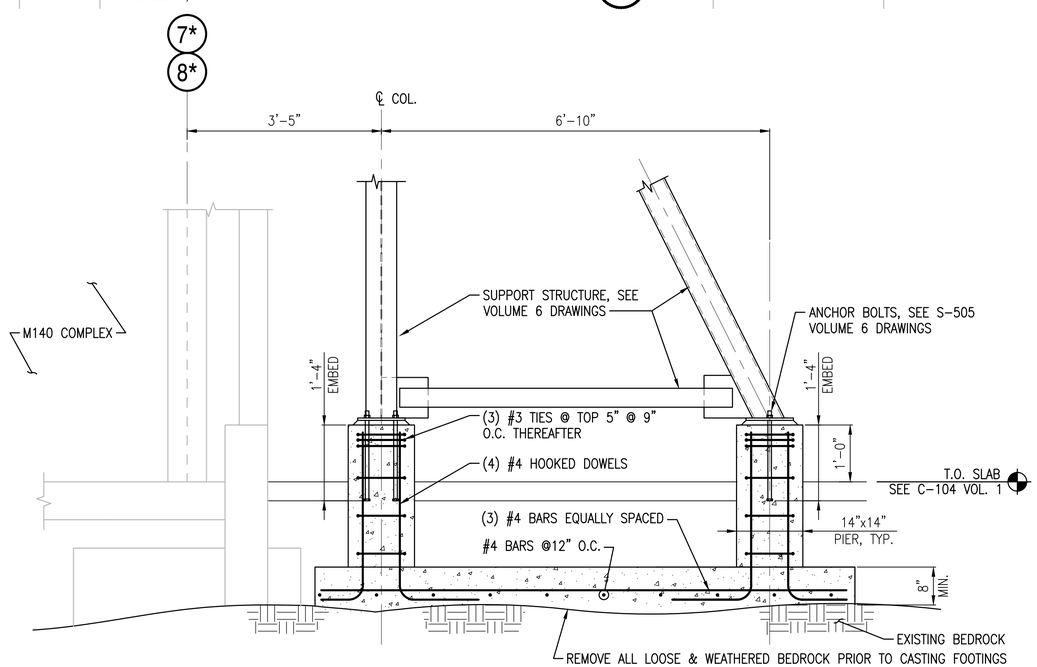

PW-05 & PW-06 SUPPORT FRAME FOUNDATION SECTION (A3)

SCALE: 3/4" = 1'-0"

F-108

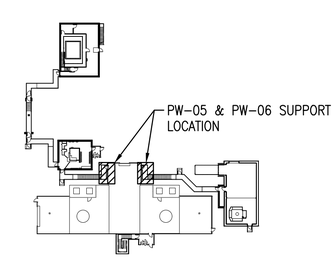

KEYMAP

SCALE: NTS

PLAN NORTH

0 1/2' 1' 2'
Scale: 1" = 1'-0"

SYM	DESCRIPTION	DATE	APPR
0	ISSUED FOR CONSTRUCTION	10/28/2016	CBC

NAVFAC

STATE OF MAINE
BRIAN J. BEAULIEU
No. 12004
LICENSED
PROFESSIONAL ENGINEER
10/28/16
SEAL

Colby Company engineering

A/E INFO

APPROVED
David W. Greenfield
FOR COMMANDER NAVFAC

ACTIVITY
TIM FISHER
C. 2370.6 BRANCH HEAD

SATISFACTORY TO DATE 10/28/2016

DES BJB DRW TJG CHK CBC

PMDM	PETER STOCKLESS
BRANCH MANAGER	IAN BODWELL
FEA/DPM&E	AMIN BAHROUR
FIRE PROTECTION	PATRICK BAKAJ

DEPARTMENT OF THE NAVY
NAVAL FACILITIES ENGINEERING COMMAND
PUBLIC WORKS DEPARTMENT - MAINE

NAVAL FACILITIES ENGINEERING COMMAND ~ MID-ATLANTIC
NAVAL SHIPYARD - PORTSMOUTH, NH

PORTSMOUTH NAVAL SHIPYARD
KITTERY, ME

DRY DOCK #1 DEFUELING COMPLEX
SITE & FOUNDATIONS

FOUNDATION PLAN PW-05 & PW-06 SUPPORT FRAME

EPROJECT NO.: 1363311

CONSTR. CONTR. NO. N40085-17-C-5002

NAVFAC DRAWING NO. 12734764

SHEET 27 OF 46

F-108 DD1-16-845

DRAWFORM REVISION: 10 OCTOBER 2014

10/28/2016 7:52:30 AM X:\297 PORTSMOUTH NAVAL SHIPYARD\297.005.001 - DD#1 DEFUELING COMPLEX DESIGN\DRAWINGS\SITE - FOUNDATIONS\SHEETS\F-108.DWG

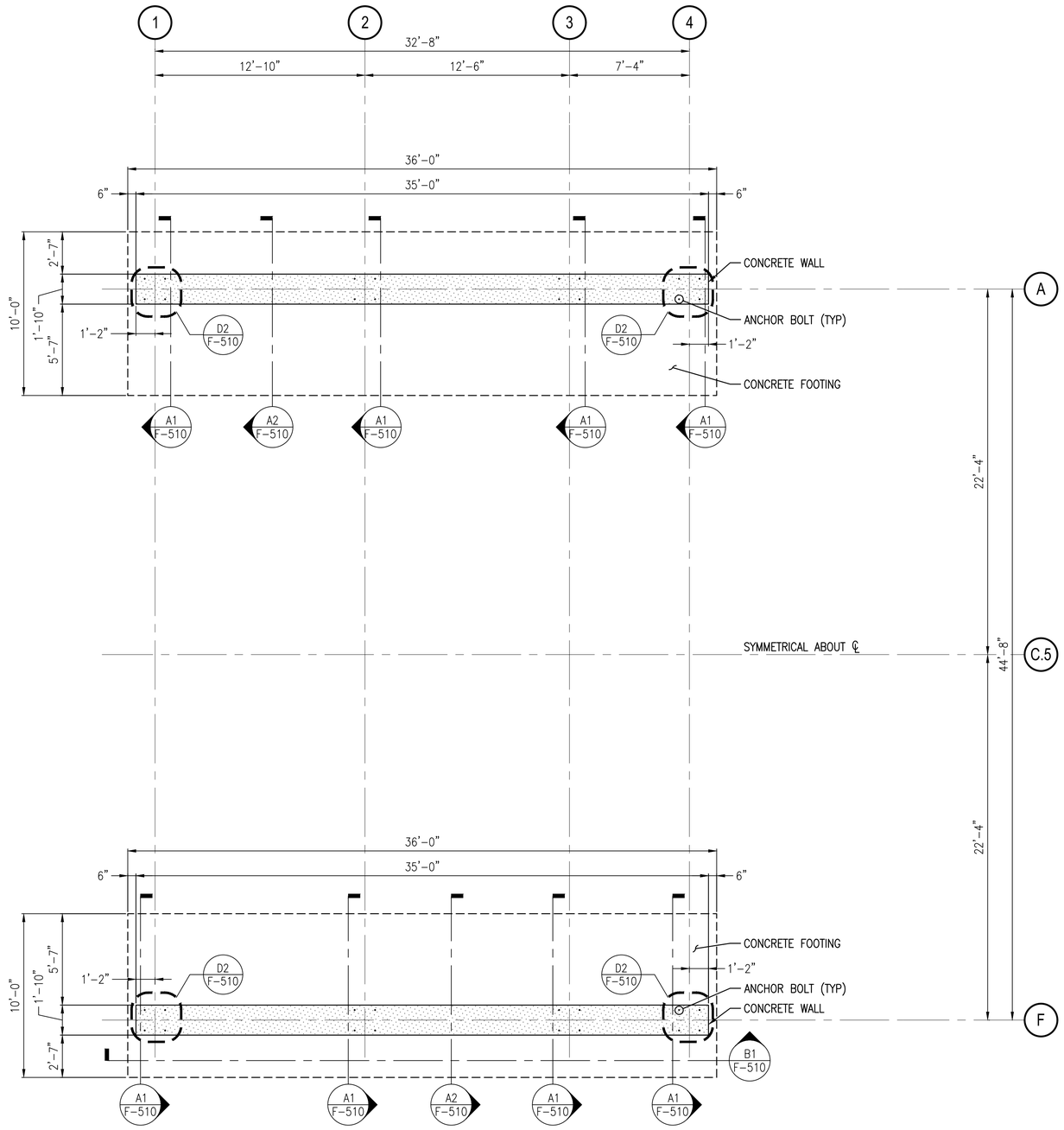

PLAN - RAE SP-6 & RAE-4 STORAGE FOUNDATIONS

SCALE: 1/4" = 1'-0"

PLAN NORTH

0 2' 4' 8'
Scale: 1/4" = 1'-0"

SYM	DESCRIPTION	DATE	APPR
0	ISSUED FOR CONSTRUCTION	10/28/2016	CBC

NAVFAC

STATE OF MAINE
BRIAN J. BEAULIEU
No. 12004
LICENSED
PROFESSIONAL ENGINEER
10/28/16
SEAL

Colby Company engineering
A/E INFO

APPROVED
David W. Greenfield
FOR COMMANDER NAVFAC

ACTIVITY
TIM FISHER
C. 2370.6 BRANCH HEAD

SATISFACTORY TO DATE 10/28/2016

DES KRS DRW TJG CHK CBC

PMDM	PETER STOCKLESS
BRANCH MANAGER	IAN BODWELL
FEA/DPM&E	AMIN BAHROUR
FIRE PROTECTION	PATRICK BAKAJ

DEPARTMENT OF THE NAVY
NAVAL FACILITIES ENGINEERING COMMAND
PUBLIC WORKS DEPARTMENT - MAINE

NAVAL FACILITIES ENGINEERING COMMAND ~ MID-ATLANTIC
NAVAL SHIPYARD - PORTSMOUTH, NH

PORTSMOUTH NAVAL SHIPYARD
KITTERY, ME

DRY DOCK #1 DEFUELING COMPLEX
SITE & FOUNDATIONS

FOUNDATION PLAN – RAE SP-6 & RAE-4 STORAGE

EPROJECT NO.: 1363311

CONSTR. CONTR. NO.
N40085-17-C-5002

NAVFAC DRAWING NO.
12734765

SHEET 28 OF 46

F-109 DD1-16-846

DRAWFORM REVISION: 10 OCTOBER 2014

10/28/2016 7:52:45 AM X:\297 PORTSMOUTH NAVAL SHIPYARD\297.005.001 - DD#1 DEFUELING COMPLEX DESIGN\DRAWINGS\SITE - FOUNDATIONS\SHEETS\F-109.DWG

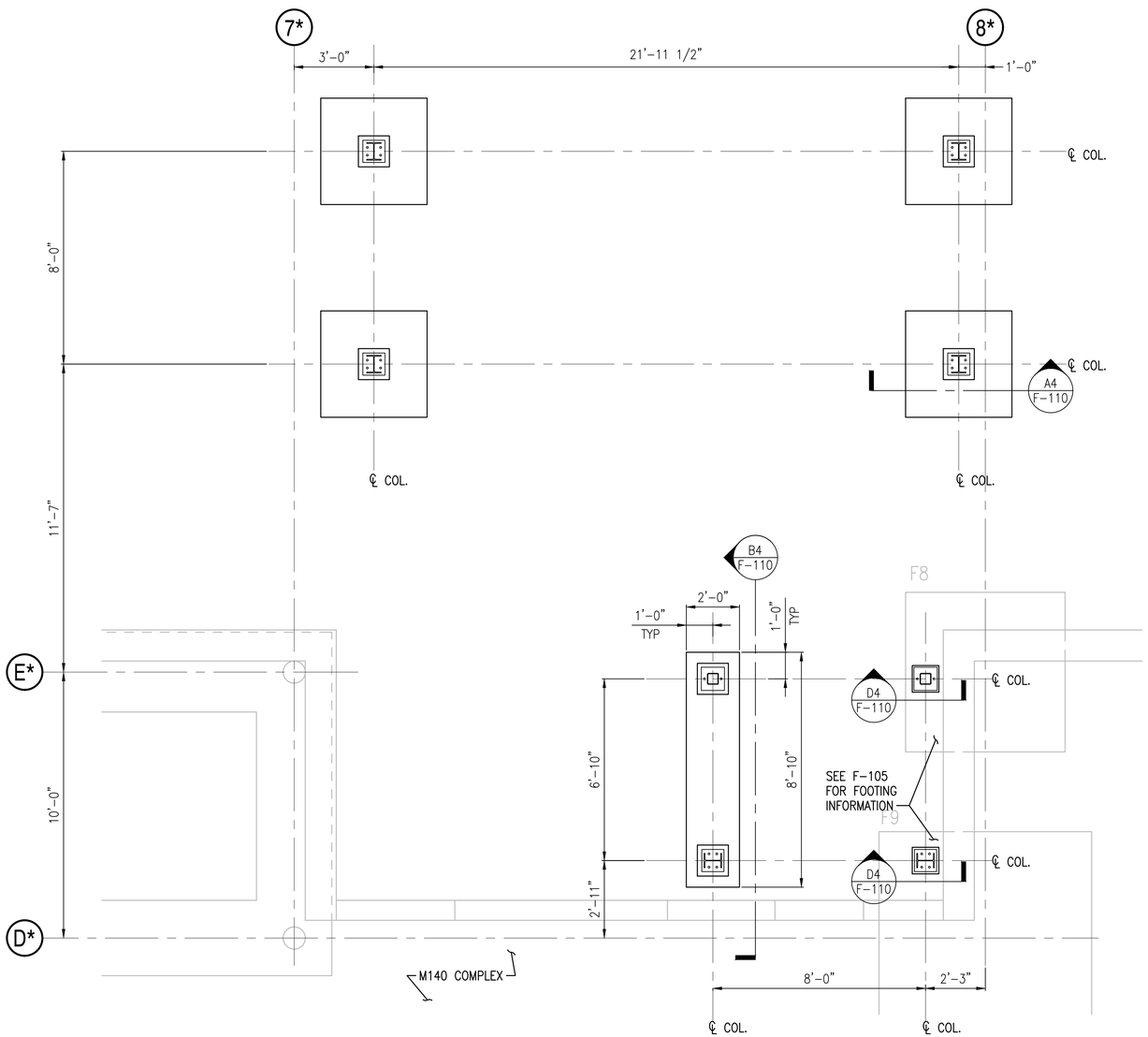

PLAN - PW-09A & PW-09B SUPPORT FOUNDATIONS WITHOUT M-140 COMPLEX STORAGE ENCLOSURE (A1)

SCALE: 3/8" = 1'-0"

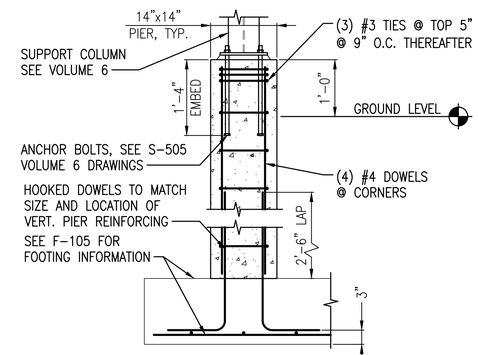

PIER FOUNDATION SECTION (D4)

SCALE: 3/4" = 1'-0"

F-110

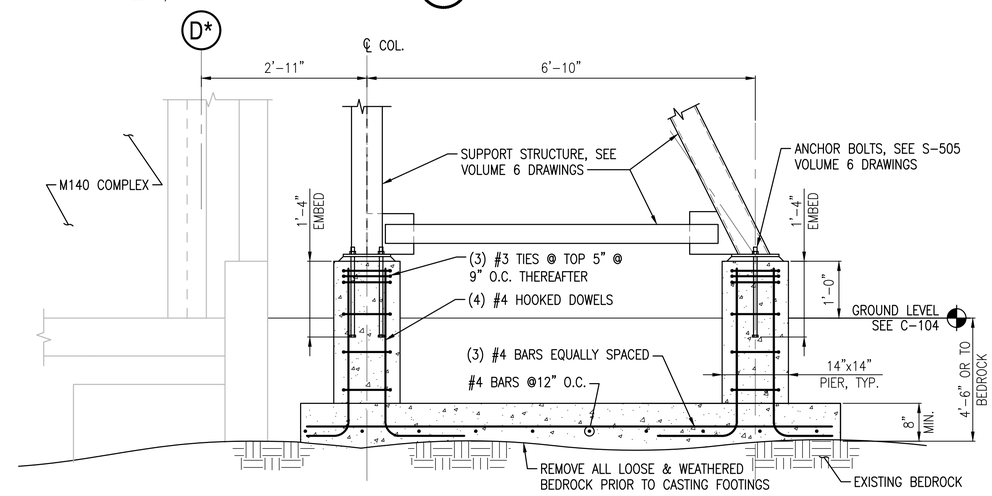

FRAME SUPPORT FOUNDATION SECTION (B4)

SCALE: 3/4" = 1'-0"

F-110

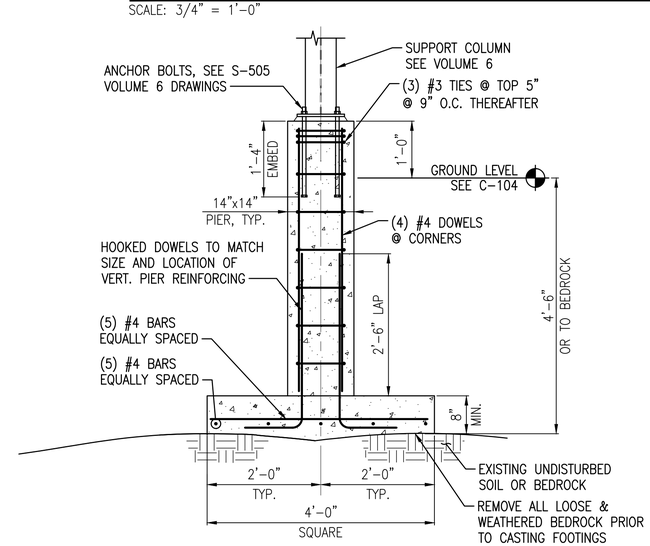

PIER FOUNDATION SECTION (A4)

SCALE: 3/4" = 1'-0"

F-110

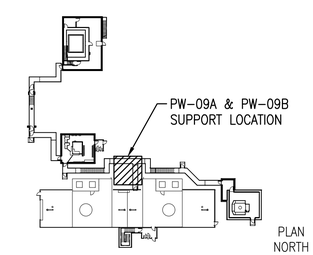

KEYMAP

SCALE: NTS

PLAN NORTH

Scale: 3/4" = 1'-0" (0, 1', 2', 3')

Scale: 3/8" = 1'-0" (0, 2', 4', 6')

NOTE:

* COLUMN GRID LINES REFERENCED FROM VOLUME 2 DRAWINGS.

SYM	DESCRIPTION	DATE	APPR
0	ISSUED FOR CONSTRUCTION	10/28/2016	CBC

NAVFAC

STATE OF MAINE — BRIAN J. BEAULIEU No. 12004 — LICENSED PROFESSIONAL ENGINEER — 10/28/16 — SEAL

Colby Company engineering — A/E INFO

APPROVED: David W. Grunfeld — FOR COMMANDER NAVFAC

ACTIVITY: TIM FISHER, C. 2370.6 BRANCH HEAD

SATISFACTORY TO — DATE: 10/28/2016

DES: BJB | DRW: TJG | CHK: CBC

PMDM: PETER STOCKLESS

BRANCH MANAGER: IAN BODWELL

FEAD/PM&E: AMIN BAHROUR

FIRE PROTECTION: PATRICK BAKAJ

DEPARTMENT OF THE NAVY — NAVAL FACILITIES ENGINEERING COMMAND — PUBLIC WORKS DEPARTMENT - MAINE

NAVAL FACILITIES ENGINEERING COMMAND ~ MID-ATLANTIC — NAVAL SHIPYARD - PORTSMOUTH, NH

PORTSMOUTH NAVAL SHIPYARD — KITTERY, ME

DRY DOCK #1 DEFUELING COMPLEX

SITE & FOUNDATIONS

PW-09A & PW-09B SUPPORT FRAMING FOUNDATIONS

EPROJECT NO.: 1363311

CONSTR. CONTR. NO.: N40085-17-C-5002

NAVFAC DRAWING NO.: 12734766

SHEET 29 OF 46

F-110 | DD1-16-847

DRAWFORM REVISION: 10 OCTOBER 2014

10/28/2016 7:53:00 AM X:\297 PORTSMOUTH NAVAL SHIPYARD\297.005.001 - DD#1 DEFUELING COMPLEX DESIGN\DRAWINGS\SITE - FOUNDATIONS\SHEETS\F-110.DWG

NOTE:
PROVIDE A BARE #4 AWG COPPER GROUNDING ELECTRODE CONDUCTOR BONDED TO A 20'-0" MIN LENGTH OF REINFORCING BAR. ROUTE GROUNDING CONDUCTOR ABOVE THE SLAB THROUGH A NON-METALLIC PROTECTIVE SLEEVE WITH SUFFICIENT LENGTH TO LEAVE 5'-0" OF CONDUCTOR ABOVE THE FINISHED SLAB.

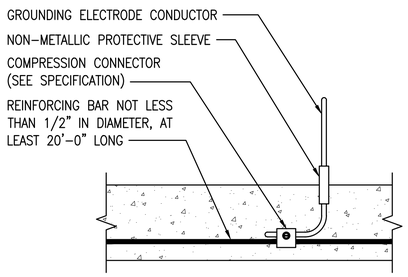

TYP. GROUNDING CONDUCTOR DETAIL (C1)
SCALE: N.T.S. F-103, F-103A, F-106, F-107, F-107A

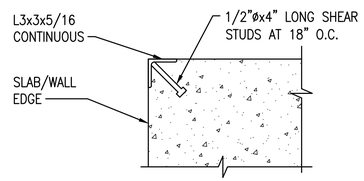

TYP. T.O. FOUNDATION WALL AT DOORS (C3)
SCALE: N.T.S.

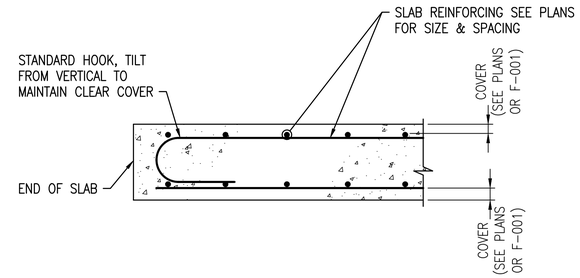

TYP. SLAB REINFORCEMENT TERMINATION (D4)
SCALE: N.T.S.

NOTES
1. SEE SHEET F-001 FOR FOUNDATION NOTES

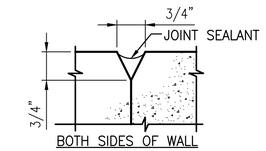

TYP. WALL JOINT DETAIL (D5)
SCALE: N.T.S. F-501, F-504

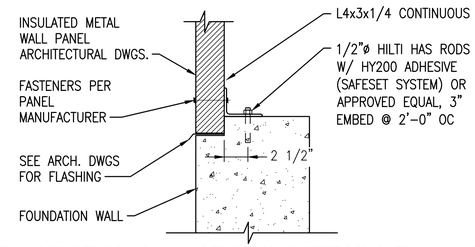

TYP. T.O. FOUNDATION WALL AT SIDING TERMINATION (C4)
SCALE: N.T.S. F-506

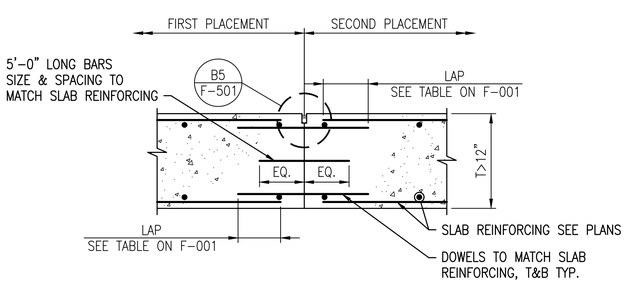

TYP. FLOOR SLAB CONSTRUCTION JOINTS (A1)
SCALE: N.T.S.

SEE MECHANICAL, PLUMBING & ELECTRICAL DRAWINGS FOR PENETRATION LOCATIONS

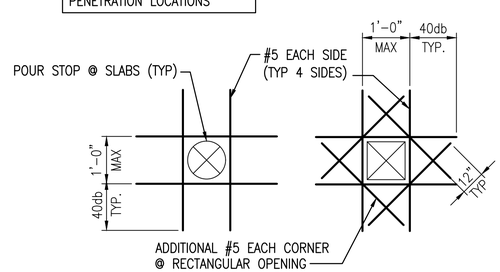

TYP. CONCRETE WALL OR SLAB PENETRATION (B3)
SCALE: N.T.S. F-001

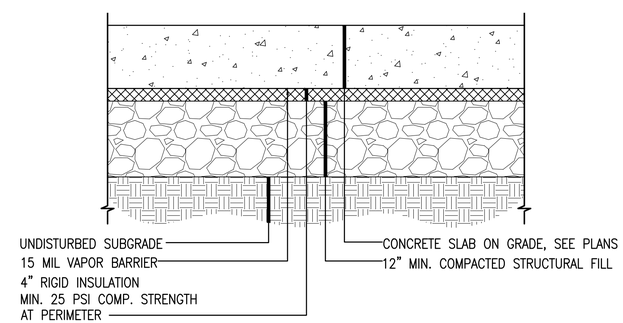

TYP. SLAB ON GRADE DETAIL (B4)
SCALE: N.T.S.

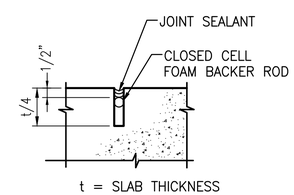

TYP. FLOOR CONTROL JOINT DETAIL (B5)
SCALE: N.T.S. F-501

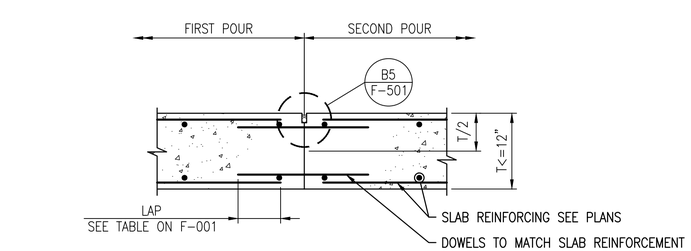

TYP. FLOOR SLAB CONSTRUCTION JOINTS (A1)
SCALE: N.T.S.

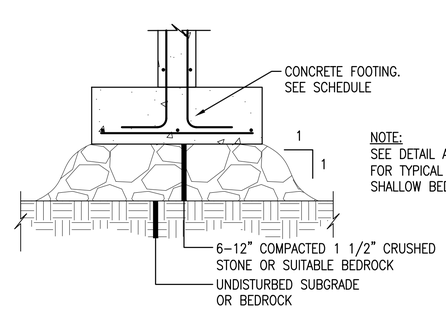

NOTE:
SEE DETAIL A2/F-502 FOR TYPICAL DETAIL OVER SHALLOW BEDROCK

TYP. FOOTING SUBGRADE PREPARATION (A3)
SCALE: N.T.S.

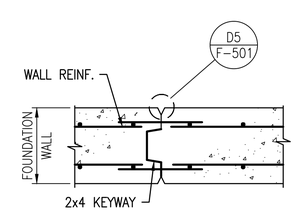

CONSTRUCTION JOINT

LOCATE JOINTS @ EDGE OF COLUMN PIER & @ 15'-0" O.C. MAX. BETWEEN COLUMN PIERS

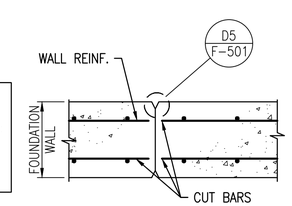

CONTROL JOINT

TYP. WALL JOINT DETAILS (A5)
SCALE: N.T.S.

SYM	DESCRIPTION	DATE	APPR
0	ISSUED FOR CONSTRUCTION	10/28/2016	CBC

NAVFAC

STATE OF MAINE — BRIAN J. BEAULIEU No. 12004 — LICENSED PROFESSIONAL ENGINEER — 10/28/16 — SEAL

Colby Company engineering — A/E INFO

APPROVED: David W. Grunfeld — FOR COMMANDER NAVFAC

ACTIVITY: TIM FISHER, C. 2370.6 BRANCH HEAD

SATISFACTORY TO | DATE 10/28/2016
DES XXX | DRW BCH | CHK CBC
PM/CM: PETER STOCKLESS
BRANCH MANAGER: IAN BODWELL
FEAD/PM&E: AMIN BAHROUR
FIRE PROTECTION: PATRICK BAKAJ

DEPARTMENT OF THE NAVY
NAVAL FACILITIES ENGINEERING COMMAND ~ MID-ATLANTIC
PUBLIC WORKS DEPARTMENT - MAINE
NAVAL FACILITIES ENGINEERING COMMAND
NAVAL SHIPYARD - PORTSMOUTH, NH
PORTSMOUTH NAVAL SHIPYARD
KITTERY, ME
DRY DOCK #1 DEFUELING COMPLEX
SITE & FOUNDATIONS
TYPICAL FOUNDATION DETAILS

EPROJECT NO.: 1363311
CONSTR. CONTR. NO. N40085-17-C-5002
NAVFAC DRAWING NO. 12734767
SHEET 30 OF 46
F-501 | DD1-16-848

DRAWFORM REVISION: 10 OCTOBER 2014

10/28/2016 7:53:11 AM X:\297 PORTSMOUTH NAVAL SHIPYARD\297.005.001 - DD#1 DEFUELING COMPLEX DESIGN\DRAWINGS\SITE - FOUNDATIONS\SHEETS\F-501.DWG

FOOTING SCHEDULE

TYPE	QTY	LENGTH	WIDTH	THICKNESS	ELEV "B"	ELEV "A"	BAR 1	BAR 2	COMMENTS
F1	22	4'-0"	4'-0"	2'-0"	–	–	–	–	(8)#5 EW, T&B
F2	3	5'-0"	5'-0"	2'-0"	5'-5"	9'-4"	#6@10	#6@10	SEE TYPICAL COLUMN FOOTING OVER SOIL
F3	2	5'-0"	5'-0"	2'-0"	5'-5"	9'-4"	#6@10	#6@10	SEE TYPICAL COLUMN FOOTING OVER SOIL
F4	1	10'-0"	6'-0"	2'-0"	5'-5"	9'-4"	#6@9	#6@10	SEE TYPICAL COLUMN FOOTING OVER SOIL
F5	2	5'-0"	5'-0"	2'-0"	5'-5"	9'-4"	#6@10	#6@10	SEE TYPICAL COLUMN FOOTING OVER BEDROCK
F6	3	8'-0"	8'-0"	3'-0"	5'-5"	9'-4"	#6@6	#6@6	SEE TYPICAL COLUMN FOOTING OVER BEDROCK
F7	2	6'-0"	6'-0"	2'-0"	1'-6"	9'-4"	#6@9	#6@9	SEE TYPICAL COLUMN FOOTING OVER BEDROCK
F8	2	6'-0"	6'-0"	2'-0"	–	–	–	–	(7)#7 EW, T&B
F9	10	8'-0"	8'-0"	2'-6"	–	–	–	–	(9)#7 EW, T&B

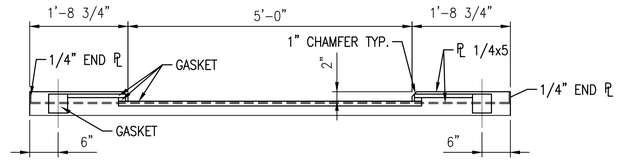

ISO CONTAINER BASE SEAL - DRE7 (D3)
SCALE: 3/4"=1'-0" F-502

NOTES

1. SEE SHEET F-001 FOR FOUNDATION NOTES

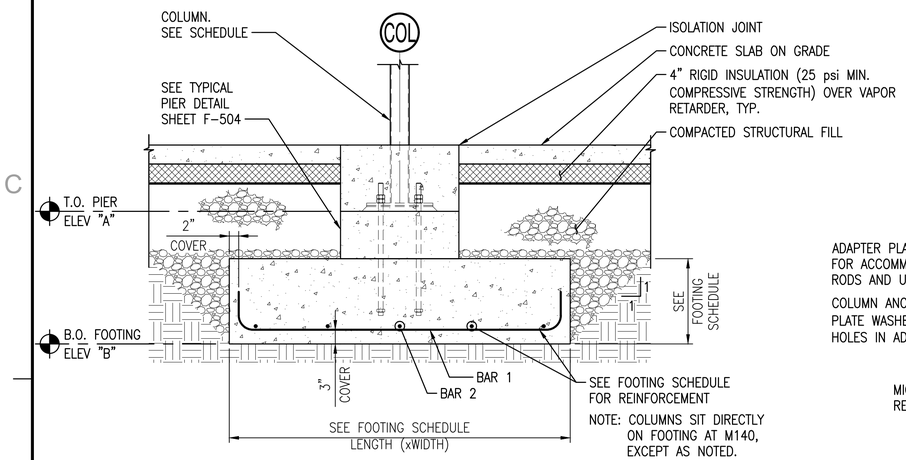

TYP. COLUMN FOOTING OVER SOIL (C1)
SCALE: 3/4"=1'-0"

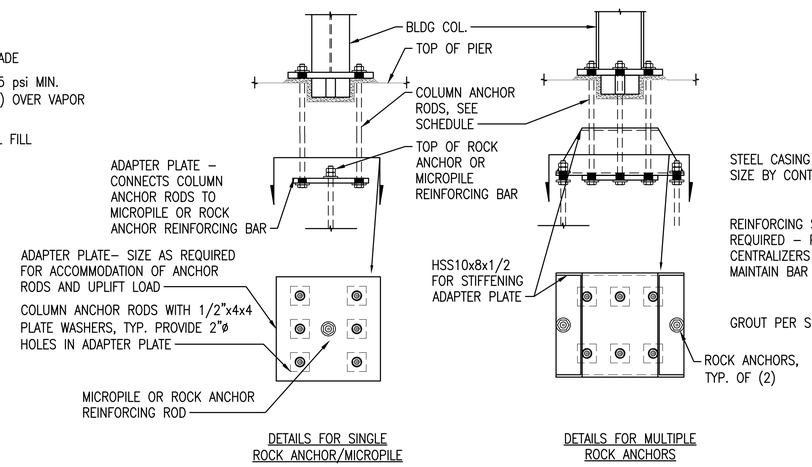

TYP. COLUMN UPLIFT DETAIL (C3)
SCALE: 3/4"=1'-0" F-502, F-503

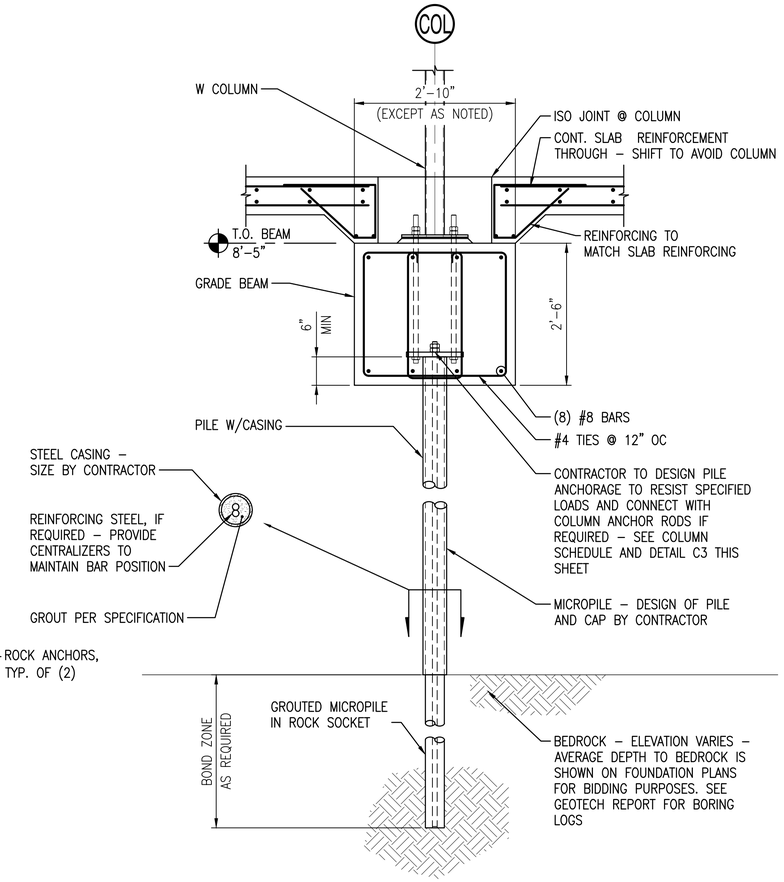

TYP. MICROPILE DETAIL - M140 (C5)
SCALE: 3/4"=1'-0" F-104

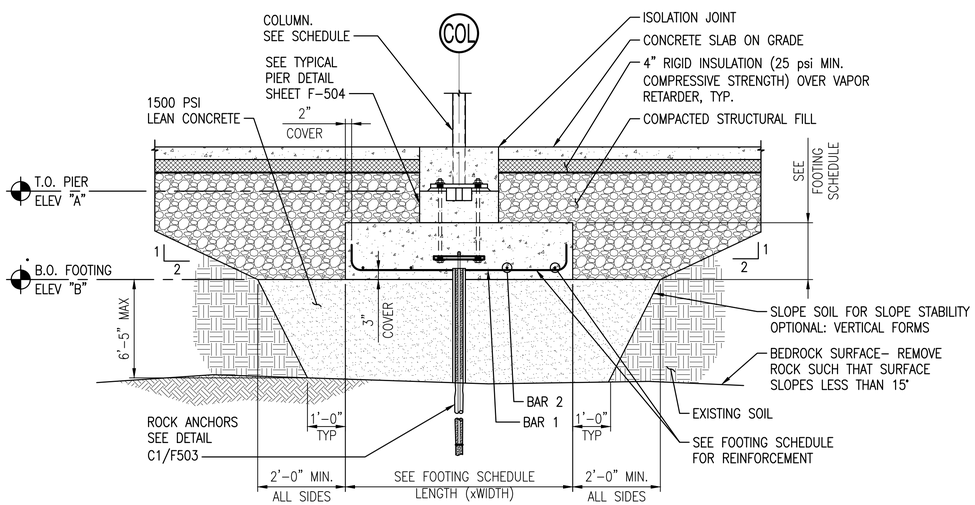

TYP COLUMN OVER SHALLOW BEDROCK DETAIL (A2)
SCALE: 1/2"=1'-0" F-501, F-508

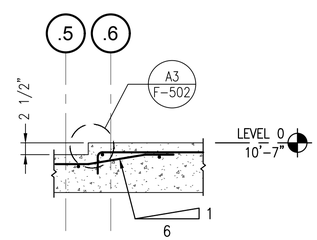

ISO CONTAINER SLAB DETAIL - DRE7 (B3)
SCALE: 3/4"=1'-0" F-103A

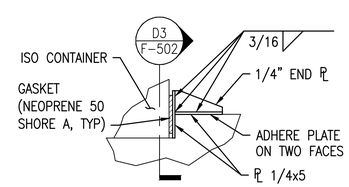

DETAIL (A3)
SCALE: 1 1/2"=1'-0" F-502

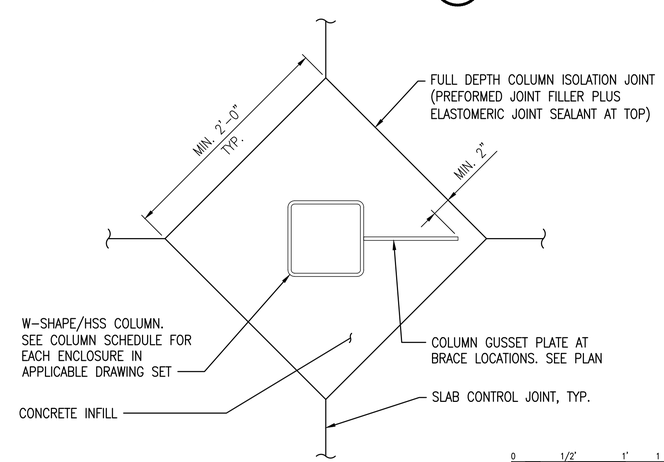

TYP. COLUMN ISOLATION JOINT (A5)
SCALE: 1 1/2"=1'-0"

Scale: 1 1/2" = 1'-0"
Scale: 3/4" = 1'-0"

SYM	DESCRIPTION	DATE	APPR
0	ISSUED FOR CONSTRUCTION	10/28/2016	CBC

NAVFAC

STATE OF MAINE — BRIAN J. BEAULIEU No. 12004 — LICENSED PROFESSIONAL ENGINEER — 10/28/16 — SEAL

Colby Company engineering — A/E INFO

APPROVED: David W. Grunfeld
FOR COMMANDER NAVFAC

ACTIVITY: TIM FISHER, C. 2370.6 BRANCH HEAD
SATISFACTORY TO DATE: 10/28/2016
DES: XXX | DRW: BCH | CHK: CBC
PM/DM: PETER STOCKLESS
BRANCH MANAGER: IAN BODWELL
FEAD/PM&E: AMIN BAHROUR
FIRE PROTECTION: PATRICK BAKAJ

DEPARTMENT OF THE NAVY
NAVAL FACILITIES ENGINEERING COMMAND – MID-ATLANTIC
PUBLIC WORKS DEPARTMENT - MAINE
NAVAL FACILITIES ENGINEERING COMMAND – MID-ATLANTIC
NAVAL SHIPYARD - PORTSMOUTH, NH
PORTSMOUTH NAVAL SHIPYARD
KITTERY, ME
DRY DOCK #1 DEFUELING COMPLEX
SITE & FOUNDATIONS
FOUNDATION DETAILS

EPROJECT NO.: 1363311
CONSTR. CONTR. NO.: N40085-17-C-5002
NAVFAC DRAWING NO.: 12734768
SHEET 31 OF 46
F-502 | DD1-16-849

DRAWFORM REVISION: 10 OCTOBER 2014

10/28/2016 7:53:23 AM X:\297 PORTSMOUTH NAVAL SHIPYARD\297.005.001 - DD#1 DEFUELING COMPLEX DESIGN\DRAWINGS\SITE - FOUNDATIONS\SHEETS\F-502.DWG

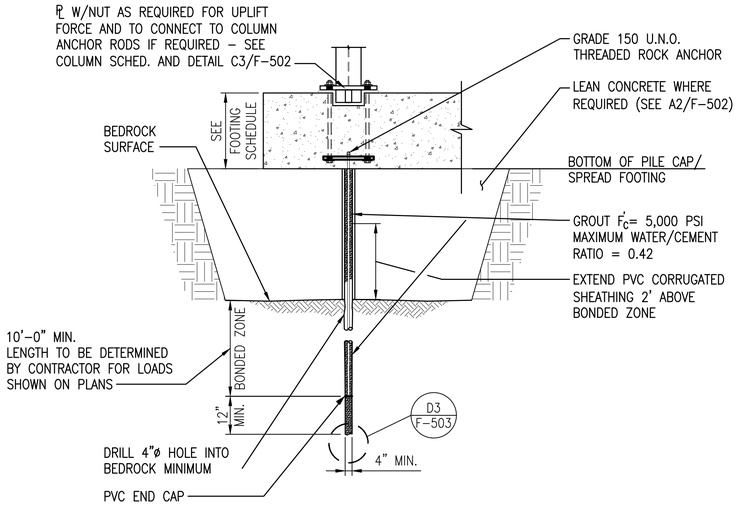

TYP. ROCK ANCHOR DETAIL (C1)

SCALE: 1/2"=1'-0" F-001, F-102, F-102A, F-104, F-502

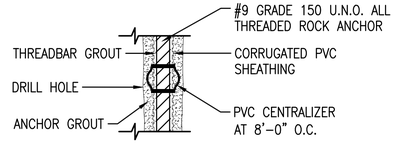

ENLARGED ROCK ANCHOR DETAIL (D3)

SCALE: 1/2"=1'-0" F-503

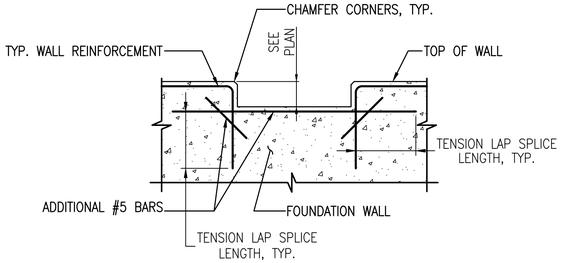

TYP. WALL DEPRESSION (D4)

SCALE: 1/2"=1'-0"

NOTES

1. SEE SHEET F-001 FOR FOUNDATION NOTES

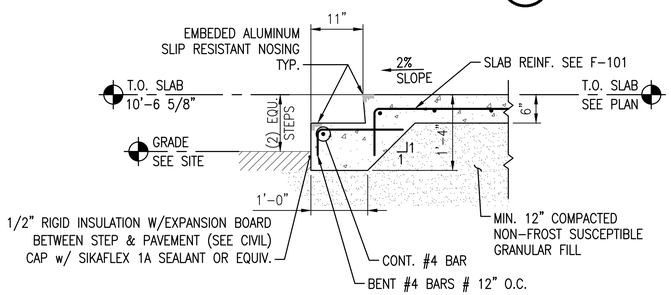

EXTERIOR STEP DETAIL - ACE3 (B1)

SCALE: 3/4" = 1'-0" F-101

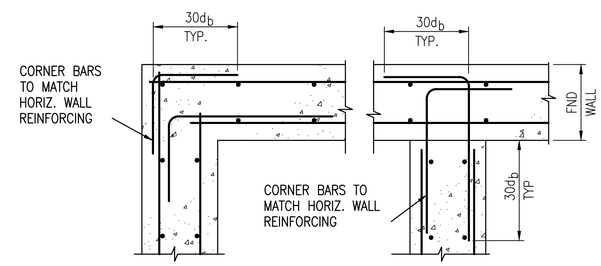

TYP. WALL CORNER REINFORCING DETAILS (B4)

SCALE: N.T.S.

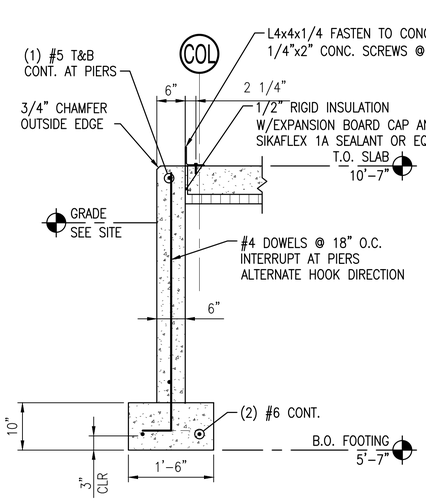

WALL DETAIL - ACE3 (A1)

SCALE: 3/4" = 1'-0" F-100, F-101, F-503, F-504

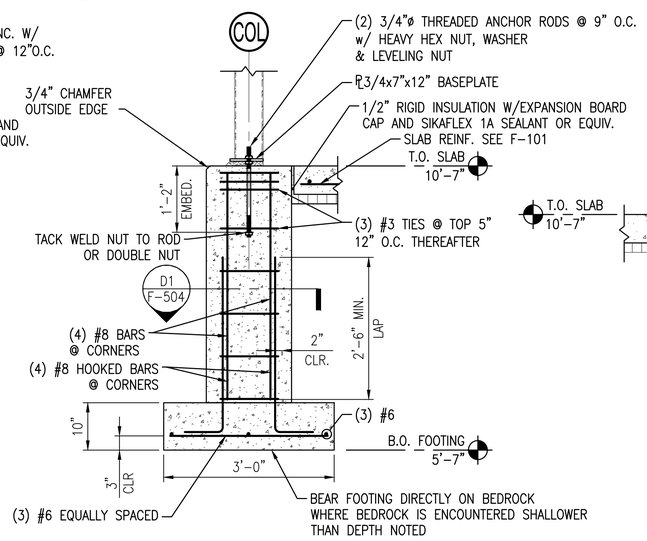

WALL DETAIL AT PIER - ACE3 (A2)

SCALE: 3/4" = 1'-0" F-100, F-101

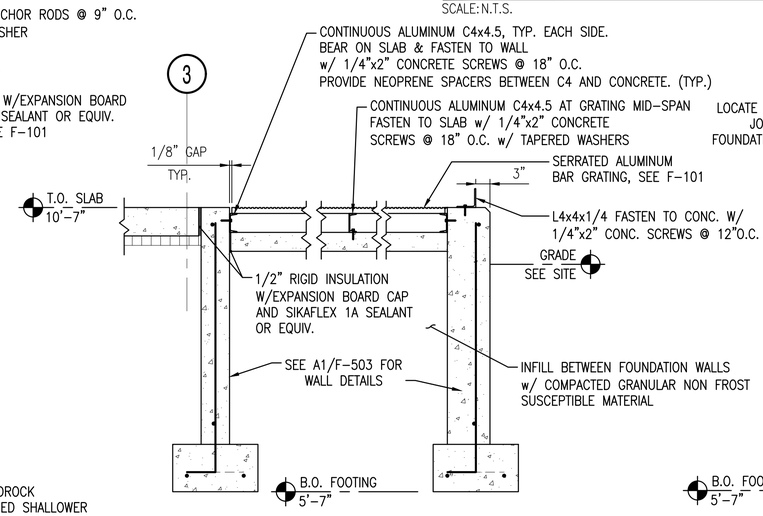

SECTION AT ENTRY SLAB - ACE3 (A3)

SCALE: 3/4" = 1'-0" F-100, F-101

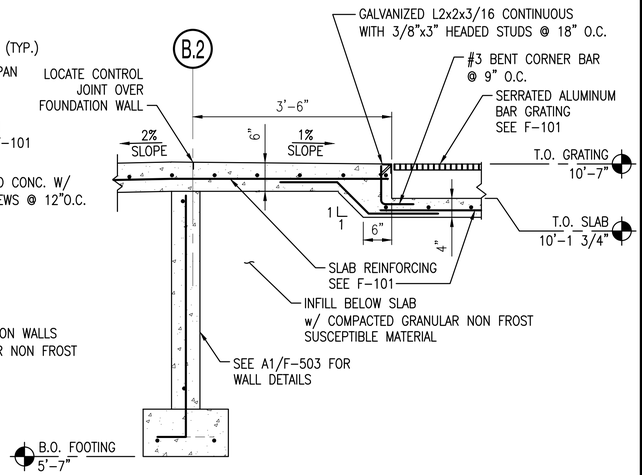

SECTION AT ENTRY SLAB - ACE3 (A5)

SCALE: 3/4" = 1'-0" F-101

Scale: 1/2" = 1'-0"

Scale: 3/4" = 1'-0"

SYM	DESCRIPTION	DATE	APPR
0	ISSUED FOR CONSTRUCTION	10/28/2016	CBC

NAVFAC

STATE OF MAINE BRIAN J. BEAULIEU No. 12004 LICENSED PROFESSIONAL ENGINEER 10/28/16 SEAL

Colby Company engineering A/E INFO

APPROVED David W. Grunfeld FOR COMMANDER NAVFAC

ACTIVITY: TIM FISHER C. 2370.6 BRANCH HEAD

SATISFACTORY TO DATE 10/28/2016

DES XXX DRW BCH CHK CBC

PM/DM PETER STOCKLESS

BRANCH MANAGER IAN BODWELL

FEAD/PM&E AMIN BAHROUR

FIRE PROTECTION PATRICK BAKAJ

DEPARTMENT OF THE NAVY
NAVAL FACILITIES ENGINEERING COMMAND
PUBLIC WORKS DEPARTMENT - MAINE

NAVAL FACILITIES ENGINEERING COMMAND ~ MID-ATLANTIC
NAVAL SHIPYARD - PORTSMOUTH, NH

PORTSMOUTH NAVAL SHIPYARD
KITTERY, ME

DRY DOCK #1 DEFUELING COMPLEX
SITE & FOUNDATIONS

FOUNDATION DETAILS

EPROJECT NO.: 1363311

CONSTR. CONTR. NO. N40085-17-C-5002

NAVFAC DRAWING NO. 12734769

SHEET 32 OF 46

F-503 DD1-16-850

DRAWFORM REVISION: 10 OCTOBER 2014

10/28/2016 7:53:35 AM X:\297 PORTSMOUTH NAVAL SHIPYARD\297.005.001 - DD#1 DEFUELING COMPLEX DESIGN\DRAWINGS\SITE - FOUNDATIONS\SHEETS\F-503.DWG

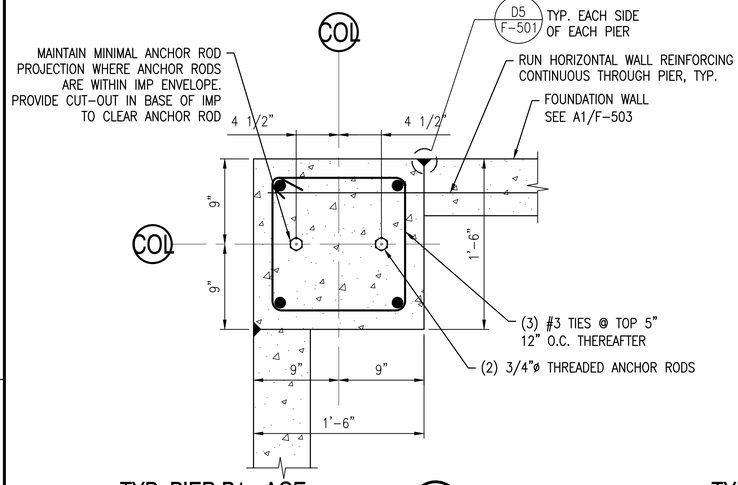

TYP. PIER P1 - ACE

SCALE: 1-1/2"=1'-0" F-503 D1

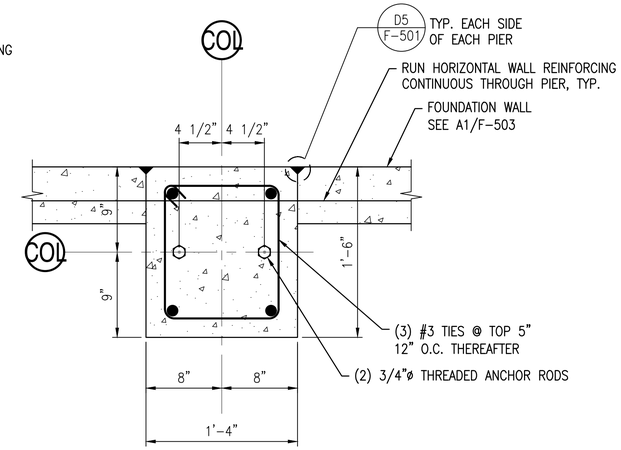

TYP. PIER P2 - ACE

SCALE: 1-1/2"=1'-0" D2

NOTES

1. SEE SHEET F-001 FOR FOUNDATION NOTES

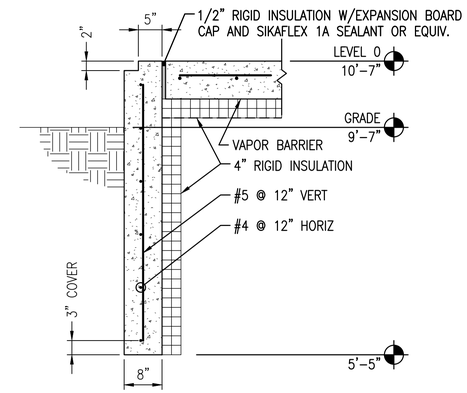

WALL DETAIL - DRE7

SCALE: 3/4" = 1'-0" F-102, F-103, F-102A, F-103A C4

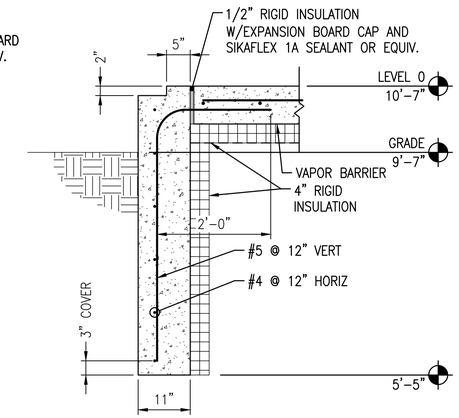

WALL DETAIL - DRE7

SCALE: 3/4" = 1'-0" F-102, F-103, F-102A, F-103A C5

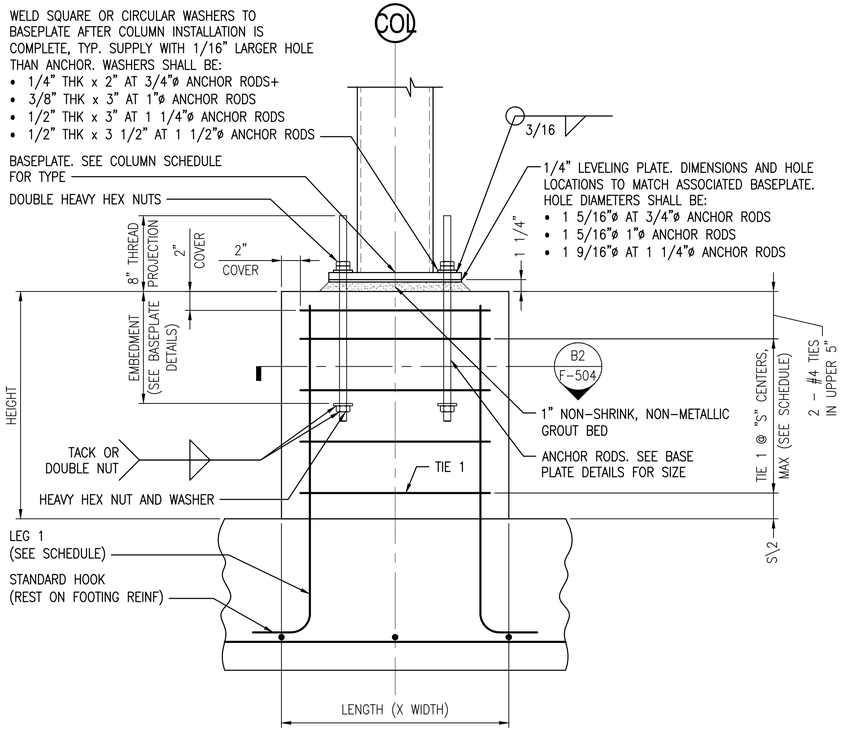

TYP PIER DETAIL

SCALE: 1 1/2"=1'-0" F-502 A1

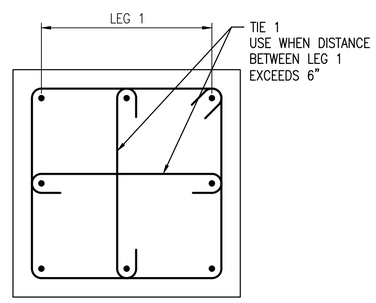

PIER SECTION

SCALE: 1-1/2" = 1'-0" F-504 B2

PIER SCHEDULE						
TYPE	LENGTH	WIDTH	HEIGHT	LEG 1	TIE 1	S
P1	2'-7"	2'-0"	1'-11"	8-#6	#4	12"
P2	2'-7"	2'-4"	1'-11"	8-#6	#4	12"
P3	2'-4"	2'-0"	1'-11"	8-#6	#4	12"
P4	2'-4"	2'-4"	1'-11"	8-#6	#4	10"
P5	2'-0"	2'-0"	5'-10"	8-#6	#4	12"
P6	2'-7"	2'-0"	0'-11"	8-#6	#4	10"
P7	2'-4"	2'-0"	0'-11"	8-#6	#4	10"
P8	2'-4"	2'-4"	1'-11"	8-#6	#4	12"

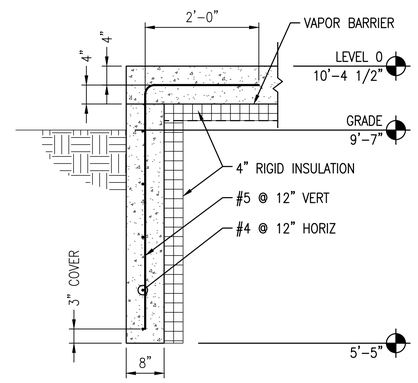

WALL DETAIL - DRE7

SCALE: 3/4" = 1'-0" F-102A, F-103A B4

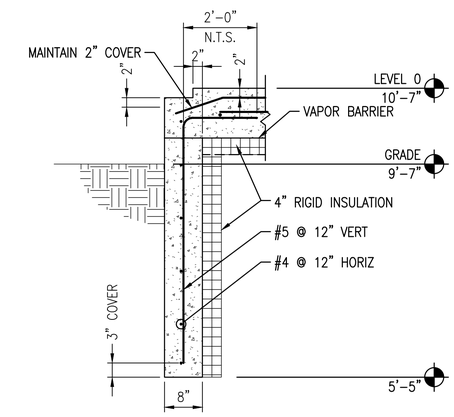

WALL DETAIL - DRE7

SCALE: 3/4" = 1'-0" F-102A, F-103A B5

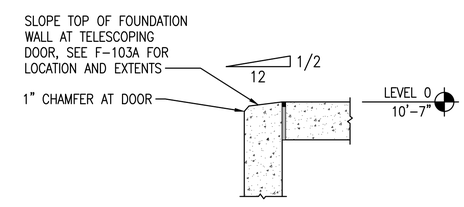

ISO CONTAINER SLAB DETAIL - DRE7

SCALE: 3/4" = 1'-0" F-102A, F-103A A4

0 1' 2' 3'
Scale: 3/4" = 1'-0"
0 1/2' 1' 1 1/2'
Scale: 1 1/2" = 1'-0"

SYM	DESCRIPTION	DATE	APPR
0	ISSUED FOR CONSTRUCTION	10/28/2016	CBC

NAVFAC

STATE OF MAINE
BRIAN J. BEAULIEU
No. 12004
LICENSED
PROFESSIONAL ENGINEER
10/28/16
SEAL

Colby Company engineering
A/E INFO

APPROVED
David W. Greenfield
FOR COMMANDER NAVFAC

ACTIVITY: TIM FISHER, C. 2370.6 BRANCH HEAD
SATISFACTORY TO DATE: 10/28/2016
DES XXX DRW BCH CHK CBC
PMDM: PETER STOCKLESS
BRANCH MANAGER: IAN BODWELL
FEAD/PM&E: AMIN BAHROUR
FIRE PROTECTION: PATRICK BAKAJ

DEPARTMENT OF THE NAVY
NAVAL FACILITIES ENGINEERING COMMAND ~ MID-ATLANTIC
PUBLIC WORKS DEPARTMENT - MAINE
NAVAL FACILITIES ENGINEERING COMMAND
NAVAL SHIPYARD - PORTSMOUTH, NH
PORTSMOUTH NAVAL SHIPYARD
KITTERY, ME
DRY DOCK #1 DEFUELING COMPLEX
SITE & FOUNDATIONS
FOUNDATION DETAILS

EPROJECT NO.: 1363311
CONSTR. CONTR. NO. N40085-17-C-5002
NAVFAC DRAWING NO. 12734770
SHEET 33 OF 46
F-504 DD1-16-851

DRAWFORM REVISION: 10 OCTOBER 2014

10/28/2016 7:53:47 AM X:\297 PORTSMOUTH NAVAL SHIPYARD\297.005.001 - DD#1 DEFUELING COMPLEX DESIGN\DRAWINGS\SITE - FOUNDATIONS\SHEETS\F-504.DWG

NOTES

1. SEE F-001 FOR FOUNDATION NOTES.

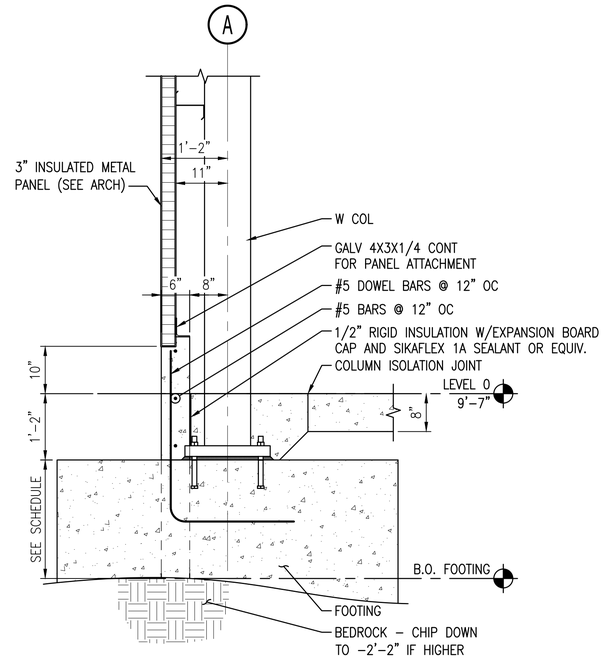

FOOTING SUPPORTED FROST WALL DETAIL AT 3" IMP - M140 COMPLEX (C2)

SCALE: 3/4"=1'-0" F-104, F-105, F-106, F-107, F-507, F-508

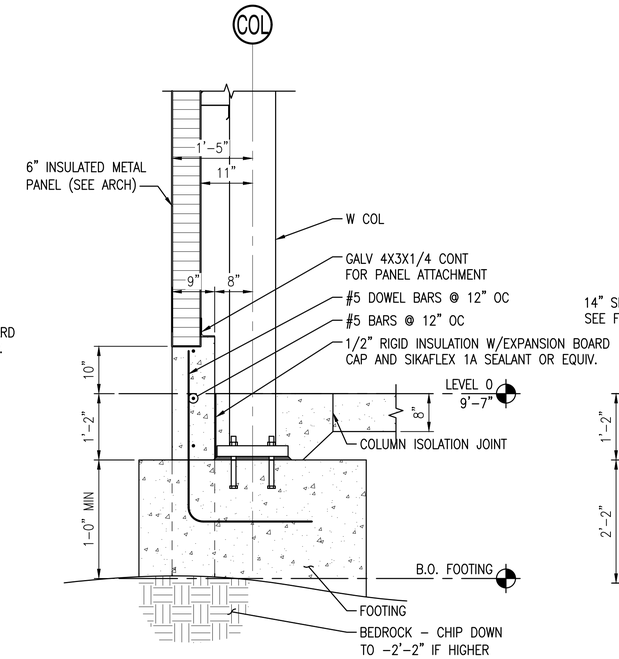

FOOTING SUPPORTED FROST WALL DETAIL AT 6" IMP - M140 COMPLEX (C3)

SCALE: 3/4"=1'-0" F-104, F-105A, F-106, F-107A

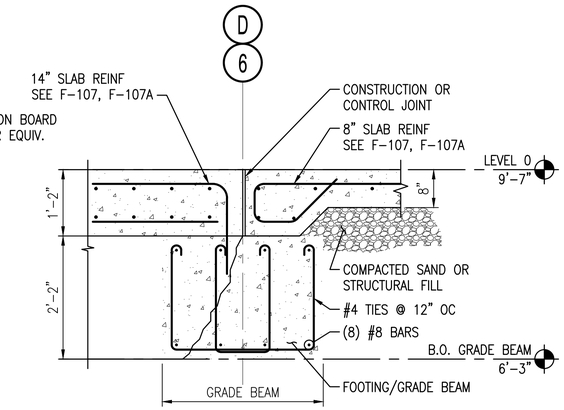

DETAIL AT FLOOR TRANSITION - M140 COMPLEX (C4)

SCALE: 3/4"=1'-0" F-105, F-105A, F-107, F-107A

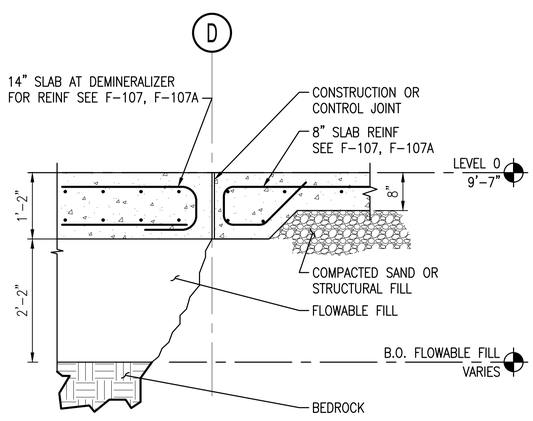

SECTION AT DEMINERALIZER SLAB ON FLOWABLE FILL (A1)

SCALE: 3/4"=1'-0" F-107, F-107A

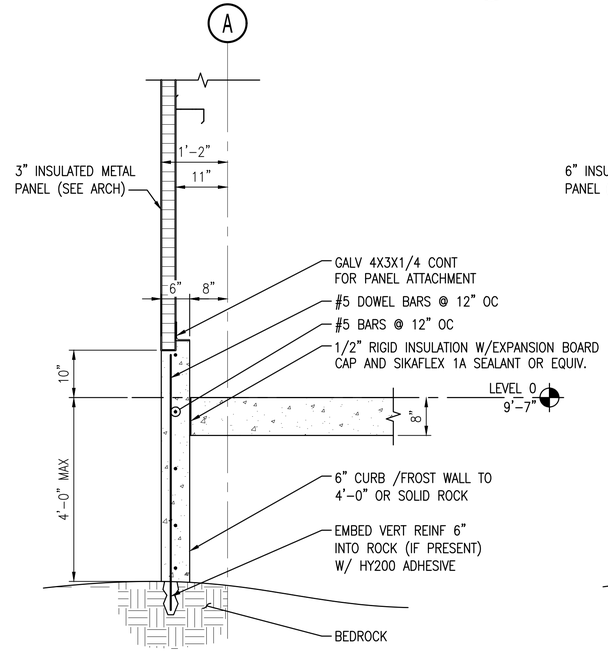

FROST WALL DETAIL AT 3" IMP - M140 COMPLEX (A2)

SCALE: 3/4"=1'-0" F-104, F-105, F-105A, F-106, F-107, F-107A

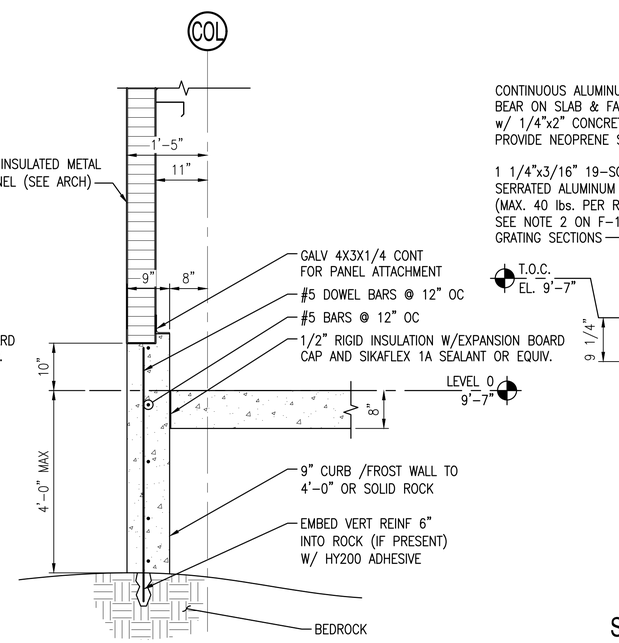

FROST WALL DETAIL AT 6" IMP - M140 COMPLEX (A3)

SCALE: 3/4"=1'-0" F-104, F-105A, F-106, F-107A

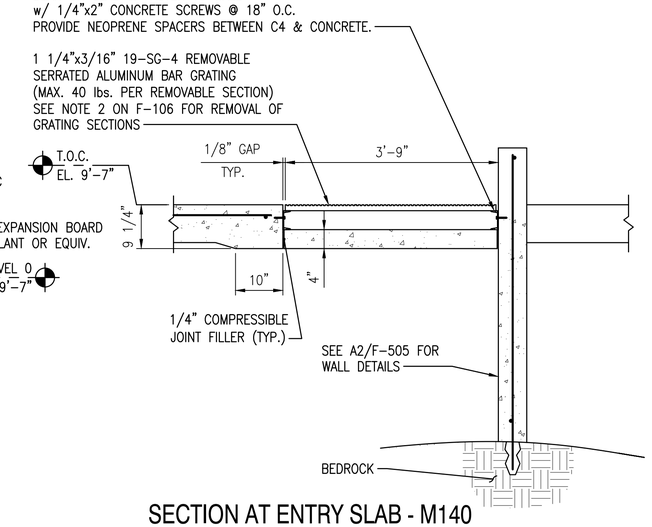

SECTION AT ENTRY SLAB - M140 COMPLEX (A5)

SCALE: 3/4"=1'-0" REF: F-106

0 1' 2' 3'
Scale: 3/4" = 1'-0"

SYM	DESCRIPTION	DATE	APPR
0	ISSUED FOR CONSTRUCTION	10/28/2016	CBC

NAVFAC

STATE OF MAINE — BRIAN J. BEAULIEU No. 12004 — LICENSED PROFESSIONAL ENGINEER — 10/28/16 — SEAL

Colby Company engineering — A/E INFO

APPROVED: David W. Grunfeld — FOR COMMANDER NAVFAC

ACTIVITY: TIM FISHER, C. 2370.6 BRANCH HEAD

SATISFACTORY TO DATE 10/28/2016

DES XXX | DRW BCH | CHK CBC

PMDM: PETER STOCKLESS

BRANCH MANAGER: IAN BODWELL

FEA/PM&E: AMIN BAHROUR

FIRE PROTECTION: PATRICK BAKAJ

DEPARTMENT OF THE NAVY — NAVAL FACILITIES ENGINEERING COMMAND — PUBLIC WORKS DEPARTMENT - MAINE

NAVAL FACILITIES ENGINEERING COMMAND ~ MID-ATLANTIC — NAVAL SHIPYARD - PORTSMOUTH, NH

PORTSMOUTH NAVAL SHIPYARD — KITTERY, ME

DRY DOCK #1 DEFUELING COMPLEX

SITE & FOUNDATIONS

FOUNDATION DETAILS

EPROJECT NO.: 1363311

CONSTR. CONTR. NO.: N40085-17-C-5002

NAVFAC DRAWING NO.: 12734771

SHEET 34 OF 46

F-505 | DD1-16-852

DRAWFORM REVISION: 10 OCTOBER 2014

10/28/2016 7:54:00 AM X:\297 PORTSMOUTH NAVAL SHIPYARD\297.005.001 - DD#1 DEFUELING COMPLEX DESIGN\DRAWINGS\SITE - FOUNDATIONS\SHEETS\F-505.DWG

NOTES

1. SEE F-001 FOR FOUNDATION NOTES.

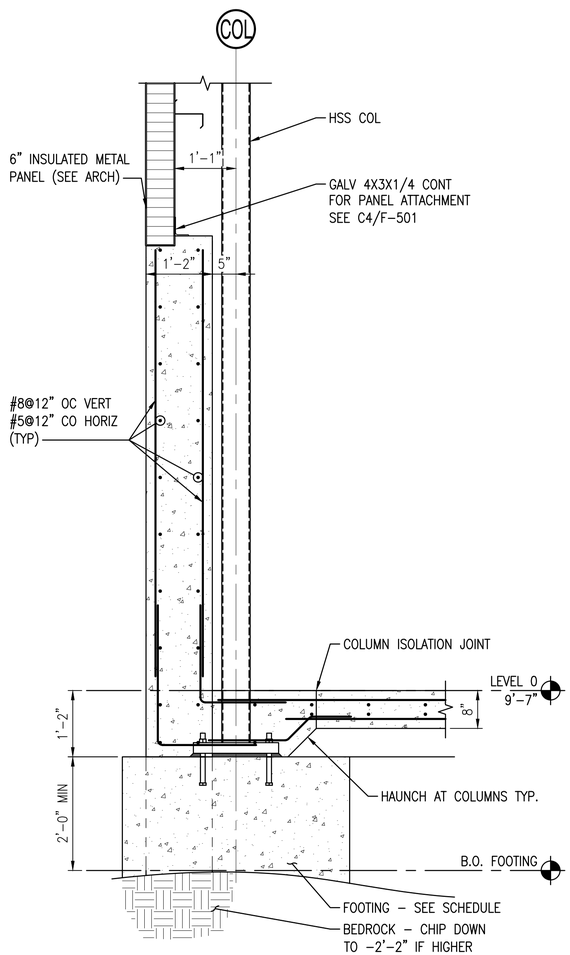

FOUNDATION DETAIL AT DEMINERALIZER BARRIER WALL - M140 COMPLEX (A1)

SCALE: 3/4"=1'-0" F-105, F-105A, F-107, F-107A, F-508

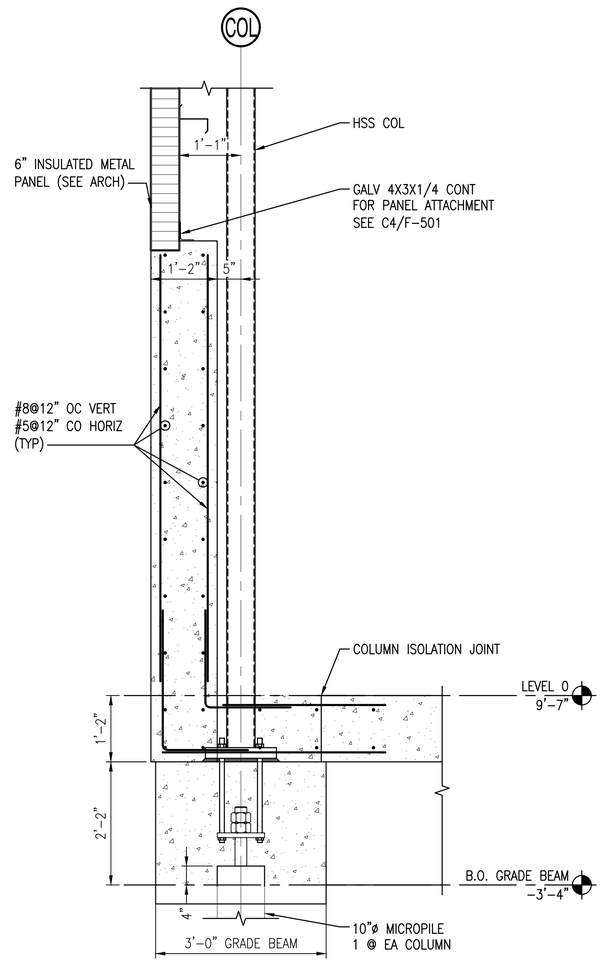

FOUNDATION DETAIL AT DEMINERALIZER BARRIER WALL - M140 COMPLEX (A2)

SCALE: 3/4"=1'-0" F-105, F-105A, F-107, F-107A, F-507

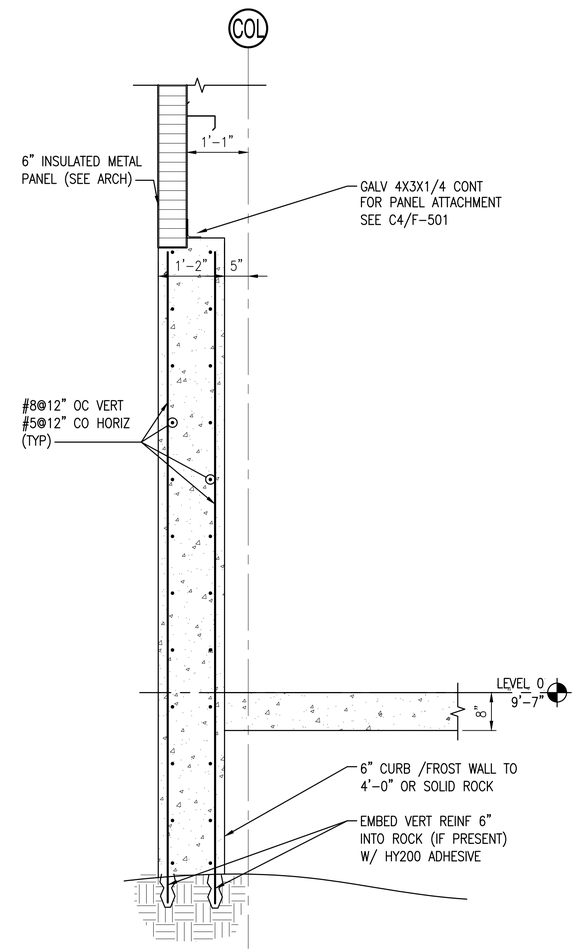

FOUNDATION DETAIL AT DEMINERALIZER BARRIER WALL - M140 COMPLEX (A4)

SCALE: 3/4"=1'-0" F-105, F-105A, F-107, F-107A

Scale: 3/4" = 1'-0"

SYM	DESCRIPTION	DATE	APPR
0	ISSUED FOR CONSTRUCTION	10/28/2016	CBC

NAVFAC

STATE OF MAINE — BRIAN J. BEAULIEU No. 12004 — LICENSED PROFESSIONAL ENGINEER — 10/28/16 — SEAL

Colby Company engineering — A/E INFO

APPROVED: David W. Grunfeld — FOR COMMANDER NAVFAC

ACTIVITY: TIM FISHER, C. 2370.6 BRANCH HEAD

SATISFACTORY TO: DATE 10/28/2016

DES XXX | DRW BCH | CHK CBC

PM/DM: PETER STOCKLESS

BRANCH MANAGER: IAN BODWELL

FEAD/PM&E: AMIN BAHROUR

FIRE PROTECTION: PATRICK BAKAJ

DEPARTMENT OF THE NAVY
NAVAL FACILITIES ENGINEERING COMMAND
PUBLIC WORKS DEPARTMENT - MAINE

NAVAL FACILITIES ENGINEERING COMMAND ~ MID-ATLANTIC
NAVAL SHIPYARD - PORTSMOUTH, NH

PORTSMOUTH NAVAL SHIPYARD — KITTERY, ME

DRY DOCK #1 DEFUELING COMPLEX
SITE & FOUNDATIONS

FOUNDATION DETAILS

EPROJECT NO.: 1363311

CONSTR. CONTR. NO.: N40085-17-C-5002

NAVFAC DRAWING NO.: 12734772

SHEET 35 OF 46

F-506 | DD1-16-853

DRAWFORM REVISION: 10 OCTOBER 2014

10/28/2016 7:54:17 AM X:\297 PORTSMOUTH NAVAL SHIPYARD\297.005.001 - DD#1 DEFUELING COMPLEX DESIGN\DRAWINGS\SITE - FOUNDATIONS\SHEETS\F-506.DWG

NOTES

1. SEE F-001 FOR FOUNDATION NOTES.

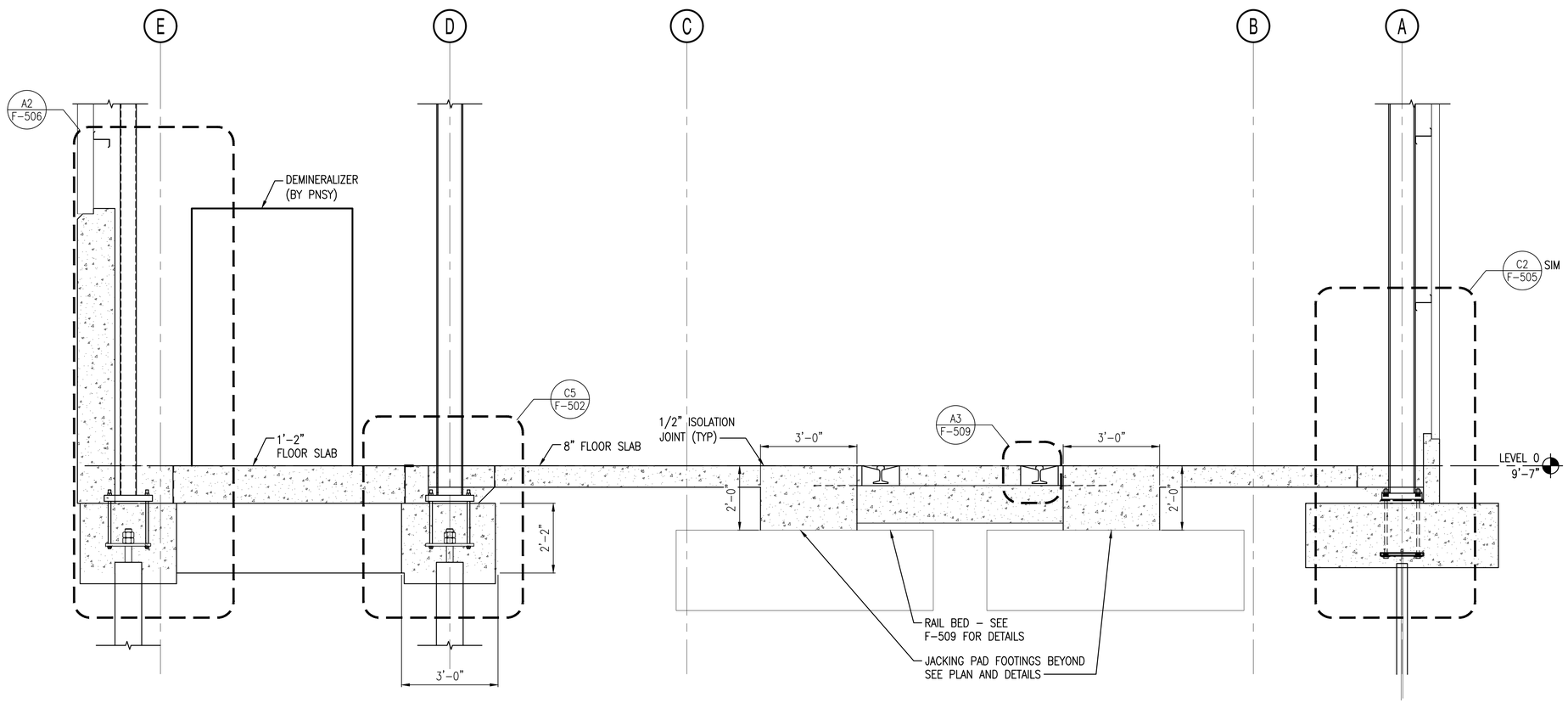

FOUNDATION DETAIL AT RAIL BED - M140

SCALE: 1/2"=1'-0"

F-105, F-105A, F-107, F-107A

A1

0 1' 2' 4'
Scale: 1/2" = 1'-0"

SYM	DESCRIPTION	DATE	APPR
0	ISSUED FOR CONSTRUCTION	10/28/2016	CBC

NAVFAC

STATE OF MAINE
BRIAN J. BEAULIEU
No. 12004
LICENSED
PROFESSIONAL ENGINEER
10/28/16
SEAL

Colby Company engineering

A/E INFO

APPROVED
David W. Grunfeld
FOR COMMANDER NAVFAC

ACTIVITY
TIM FISHER
C. 2370.6 BRANCH HEAD

SATISFACTORY TO DATE 10/28/2016

DES XXX DRW BCH CHK CBC

PMDM	PETER STOCKLESS
BRANCH MANAGER	IAN BODWELL
FEA/PM&E	AMIN BAHROUR
FIRE PROTECTION	PATRICK BAKAJ

DEPARTMENT OF THE NAVY
NAVAL FACILITIES ENGINEERING COMMAND
PUBLIC WORKS DEPARTMENT - MAINE

NAVAL FACILITIES ENGINEERING COMMAND ~ MID-ATLANTIC
NAVAL SHIPYARD - PORTSMOUTH, NH

PORTSMOUTH NAVAL SHIPYARD
KITTERY, ME

DRY DOCK #1 DEFUELING COMPLEX
SITE & FOUNDATIONS

FOUNDATION DETAILS

EPROJECT NO.: 1363311

CONSTR. CONTR. NO.
N40085-17-C-5002

NAVFAC DRAWING NO.
12734773

SHEET 36 OF 46

F-507 DD1-16-854

DRAWFORM REVISION: 10 OCTOBER 2014

10/28/2016 7:54:27 AM X:\297 PORTSMOUTH NAVAL SHIPYARD\297.005.001 - DD#1 DEFUELING COMPLEX DESIGN\DRAWINGS\SITE - FOUNDATIONS\SHEETS\F-507.DWG

NOTES

1. SEE F-001 FOR FOUNDATION NOTES.

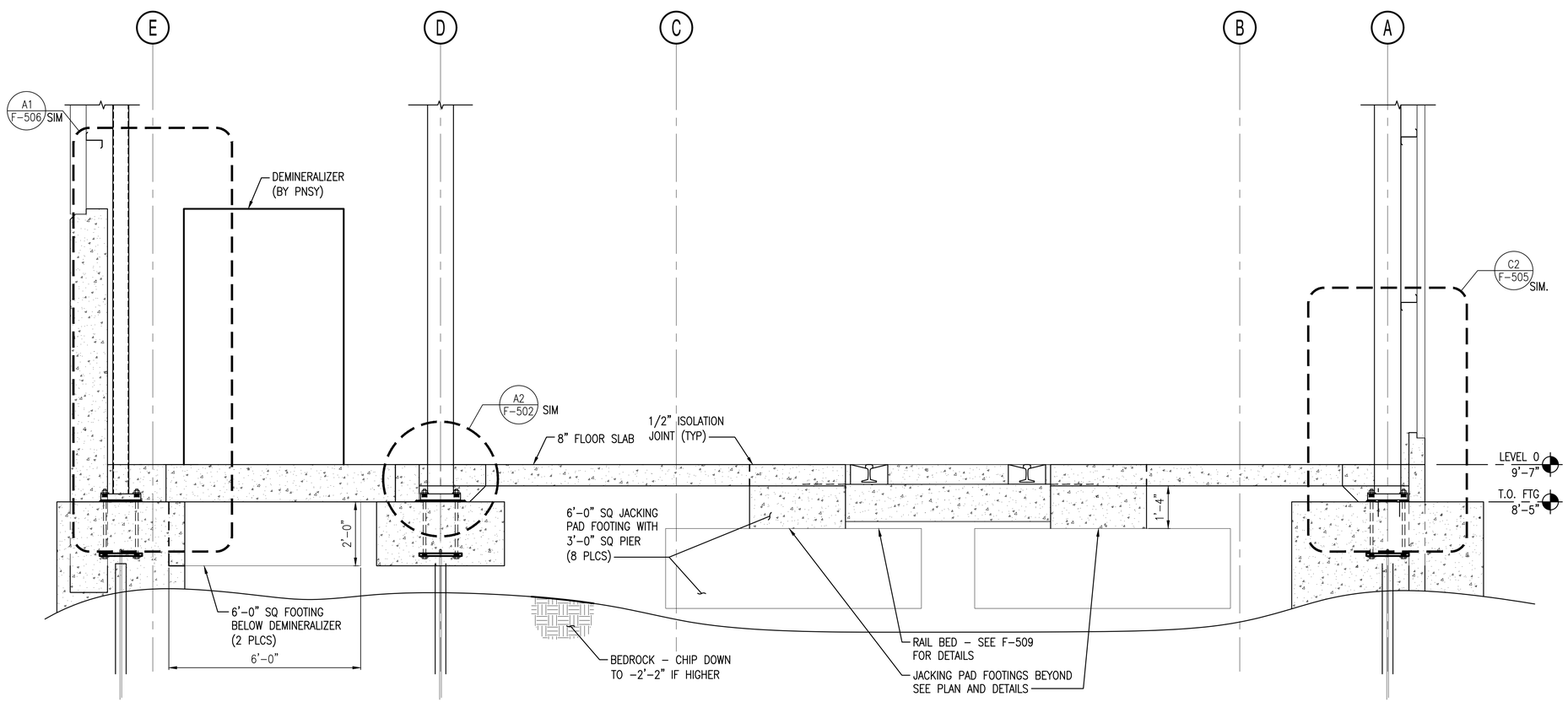

FOUNDATION DETAIL AT RAIL BED - M140

SCALE: 1/2"=1'-0"

REF: F-105, F-105A, F-107, F-107A

A1

0 1' 2' 4'
Scale: 1/2" = 1'-0"

SYM	DESCRIPTION	DATE	APPR
0	ISSUED FOR CONSTRUCTION	10/28/2016	CBC

NAVFAC

STATE OF MAINE
BRIAN J. BEAULIEU
No. 12004
LICENSED
PROFESSIONAL ENGINEER
10/28/16
SEAL

Colby Company engineering
A/E INFO

APPROVED
David W. Greenfield
FOR COMMANDER NAVFAC

ACTIVITY
TIM FISHER
C. 2370.6 BRANCH HEAD

SATISFACTORY TO DATE 10/28/2016

DES XXX DRW BCH CHK CBC

PMDM PETER STOCKLESS

BRANCH MANAGER IAN BODWELL

FEA/PM&E AMIN BAHROUR

FIRE PROTECTION PATRICK BAKAJ

DEPARTMENT OF THE NAVY
NAVAL FACILITIES ENGINEERING COMMAND ~ MID-ATLANTIC
PUBLIC WORKS DEPARTMENT - MAINE
NAVAL FACILITIES ENGINEERING COMMAND
NAVAL SHIPYARD - PORTSMOUTH, NH
PORTSMOUTH NAVAL SHIPYARD
KITTERY, ME
DRY DOCK #1 DEFUELING COMPLEX
SITE & FOUNDATIONS
FOUNDATION DETAILS

EPROJECT NO.: 1363311

CONSTR. CONTR. NO.
N40085-17-C-5002

NAVFAC DRAWING NO.
12734774

SHEET 37 OF 46

F-508 DD1-16-855

DRAWFORM REVISION: 10 OCTOBER 2014

10/28/2016 7:54:42 AM X:\297 PORTSMOUTH NAVAL SHIPYARD\297.005.001 - DD#1 DEFUELING COMPLEX DESIGN\DRAWINGS\SITE - FOUNDATIONS\SHEETS\F-508.DWG

NOTES

1. SEE F-001 FOR FOUNDATION NOTES.

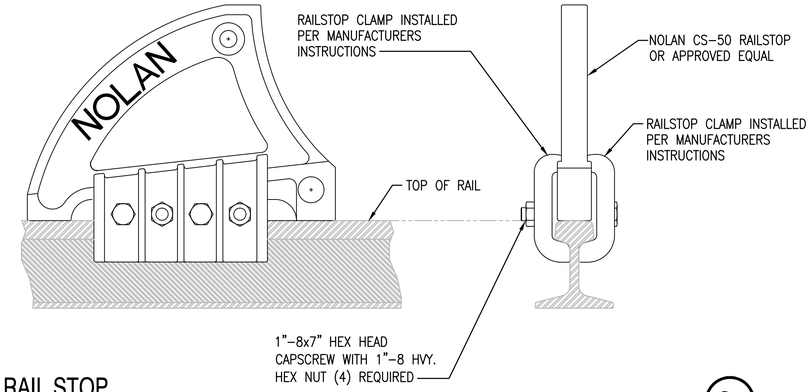

RAIL STOP
SCALE: NTS — F-106 — C1

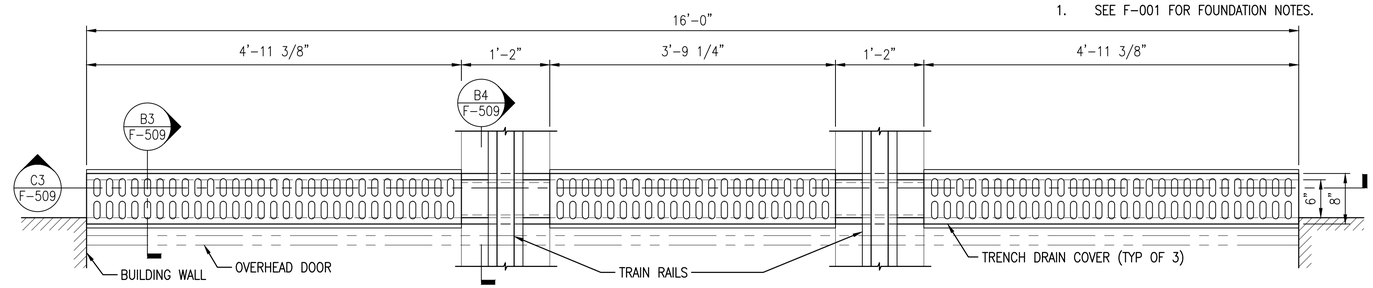

TRENCH DRAIN DETAIL
SCALE: 1"=1'-0" — F-106 — D3

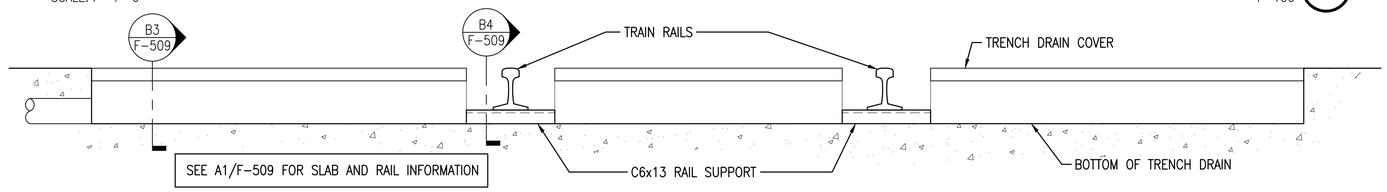

TRENCH DRAIN CROSS SECTION
SCALE: 1"=1'-0" — F-509 — C3

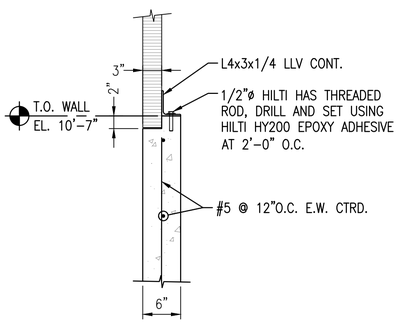

6" FROST WALL
SCALE: 1"=1'-0" — F-106 — B1

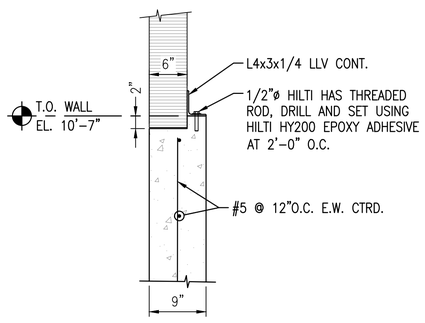

9" FROST WALL
SCALE: 1"=1'-0" — F-106 — B2

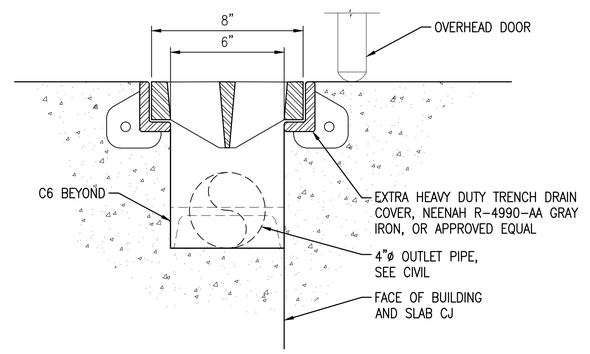

TRENCH DRAIN SECTION
SCALE: 3"=1'-0" — F-509 — B3

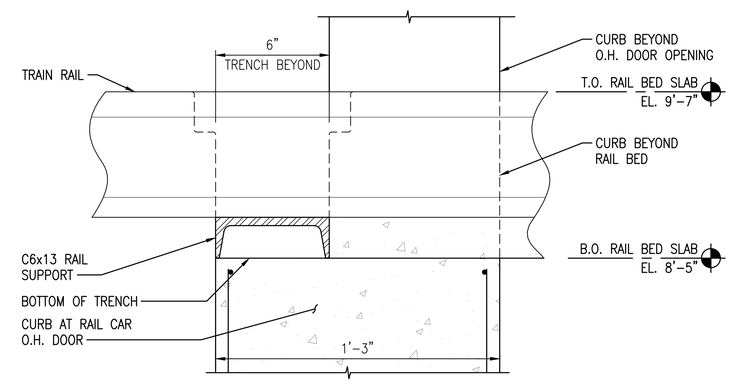

TRENCH DRAIN SECTION
SCALE: 3"=1'-0" — F-106, F-509 — B4

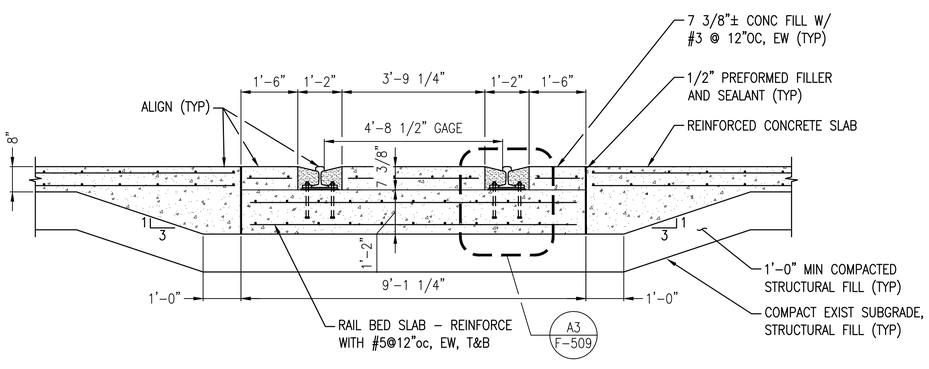

TYPICAL RAILROAD TRACK SLAB DETAIL
SCALE: 1/2" = 1'-0" — F-106, F-507, F-508 — A1

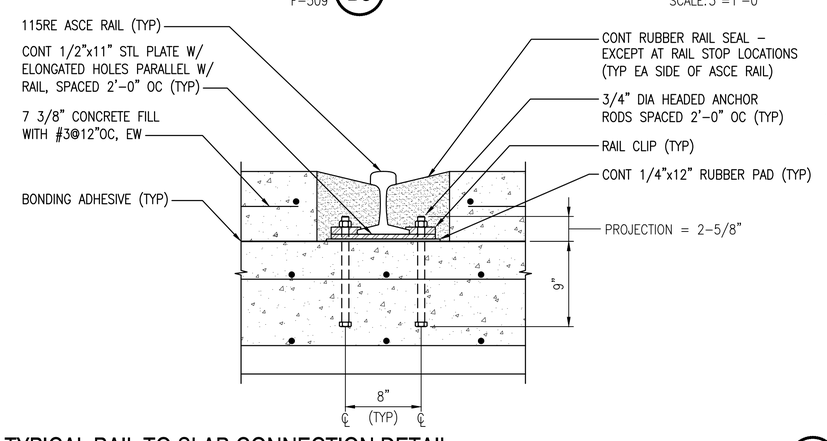

TYPICAL RAIL TO SLAB CONNECTION DETAIL
SCALE: 1-1/2" = 1'-0" — F-509 — A3

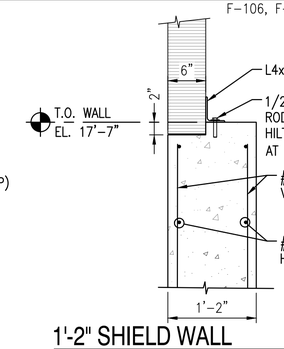

1'-2" SHIELD WALL
SCALE: 1" = 1'-0" — F-106 — A5

Scale: 3" = 1'-0" (0, 3", 6", 9")
Scale: 1 1/2" = 1'-0" (0, 1/2', 1', 1 1/2')
Scale: 1" = 1'-0" (0, 1/2', 1', 2')
Scale: 1/2" = 1'-0" (0, 1', 2', 4')

SYM	DESCRIPTION	DATE	APPR
0	ISSUED FOR CONSTRUCTION	10/28/2016	CBC

NAVFAC

STATE OF MAINE — BRIAN J. BEAULIEU No. 12004 — LICENSED PROFESSIONAL ENGINEER — 10/28/16 — SEAL

Colby Company engineering — A/E INFO

APPROVED: David W. Grunfeld — FOR COMMANDER NAVFAC

ACTIVITY: TIM FISHER, C. 2370.6 BRANCH HEAD

SATISFACTORY TO — DATE 10/28/2016

DES	JTR	DRW	TJG	CHK	CBC

PM/DM: PETER STOCKLESS
BRANCH MANAGER: IAN BODWELL
FEA/PM&E: AMIN BAHROUR
FIRE PROTECTION: PATRICK BAKAJ

DEPARTMENT OF THE NAVY — NAVAL FACILITIES ENGINEERING COMMAND — PUBLIC WORKS DEPARTMENT - MAINE
NAVAL FACILITIES ENGINEERING COMMAND – MID-ATLANTIC — NAVAL SHIPYARD - PORTSMOUTH, NH
PORTSMOUTH NAVAL SHIPYARD — KITTERY, ME
DRY DOCK #1 DEFUELING COMPLEX
SITE & FOUNDATIONS
TRACK DETAILS

EPROJECT NO.: 1363311
CONSTR. CONTR. NO.: N40085-17-C-5002
NAVFAC DRAWING NO.: 12734775
SHEET 38 OF 46
F-509 | DD1-16-856

DRAWFORM REVISION: 10 OCTOBER 2014

10/28/2016 7:54:53 AM X:\297 PORTSMOUTH NAVAL SHIPYARD\297.005.001 - DD#1 DEFUELING COMPLEX DESIGN\DRAWINGS\SITE - FOUNDATIONS\SHEETS\F-509.DWG

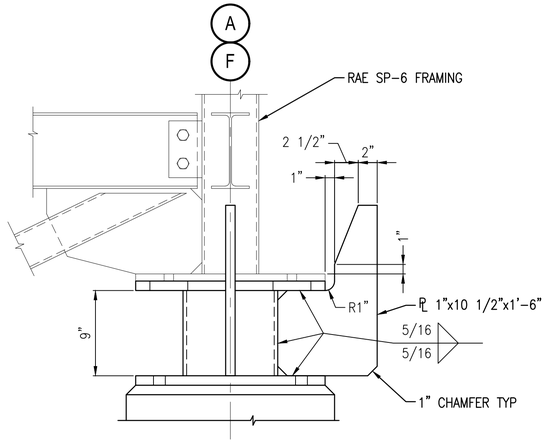

ALIGNMENT PLATE SECTION (C1)
SCALE: 1 1/2" = 1'-0" F-510

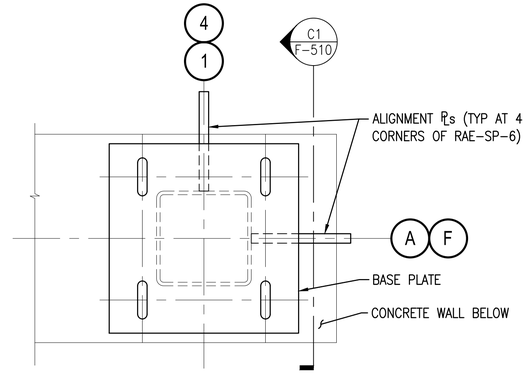

ALIGNMENT PLATE DETAIL (D2)
SCALE: 1 1/2" = 1'-0" F-109

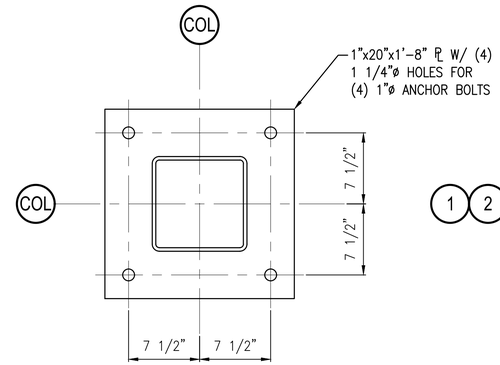

BASE PLATE DETAIL (D4)
SCALE: 1 1/2" = 1'-0" F-510

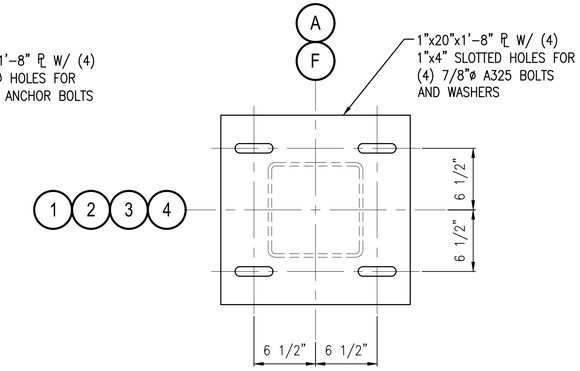

BASE PLATE DETAIL (D5)
SCALE: 1 1/2" = 1'-0" F-510

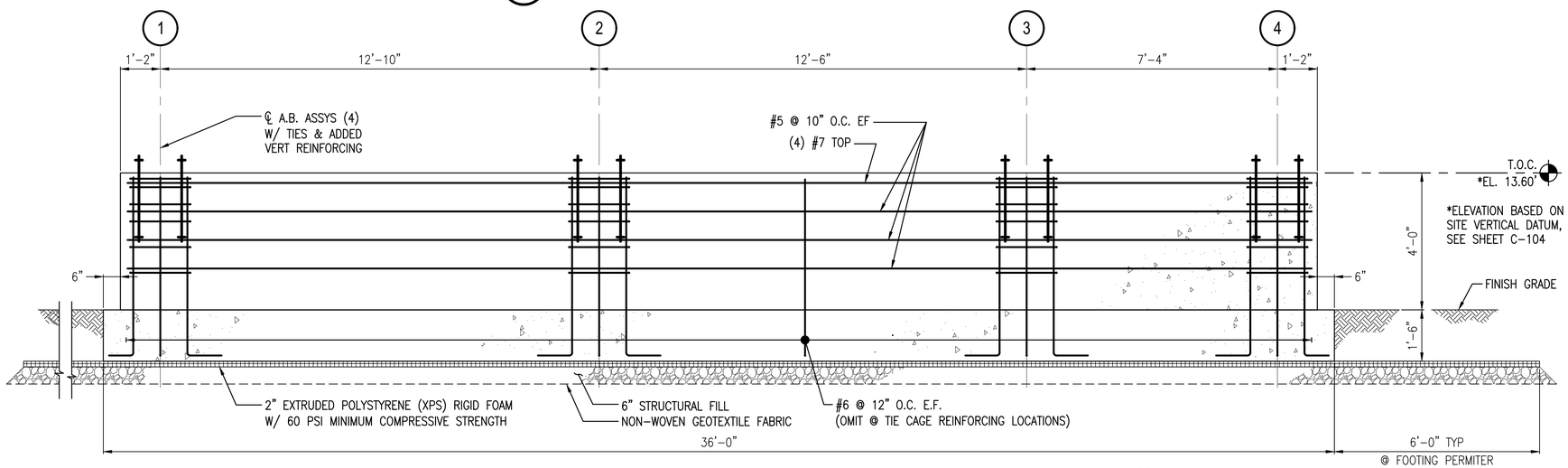

SECTION - FOUNDATION WALL (B1)
SCALE: 1/2" = 1'-0" F-109

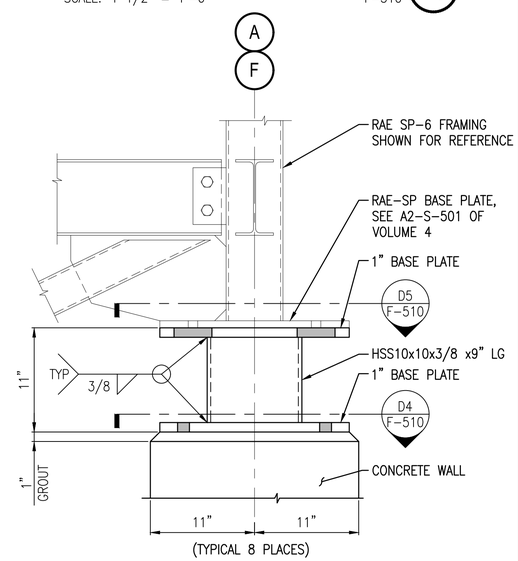

STEEL PEDESTAL DETAIL (B5)
SCALE: 1 1/2" = 1'-0" F-510

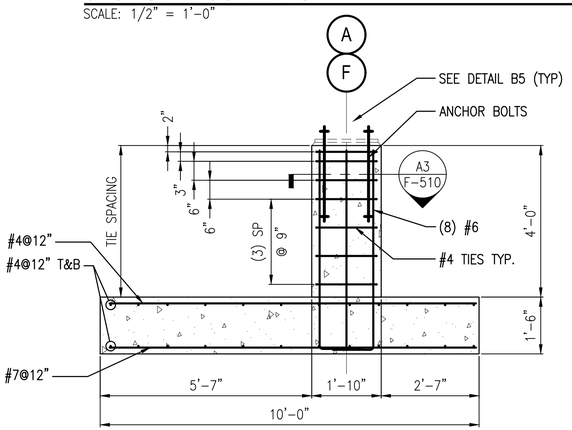

SECTION - FOUNDATION WALL (A1)
SCALE: 1/2" = 1'-0" F-109

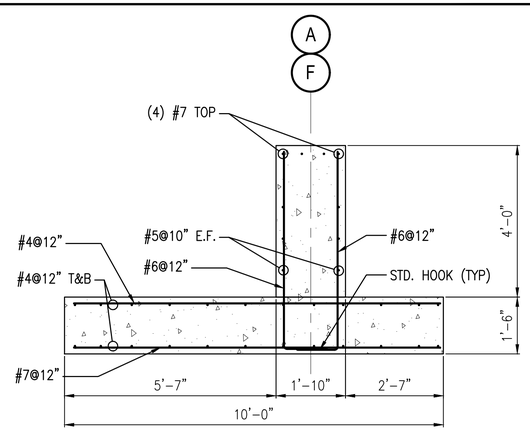

SECTION - FOUNDATION WALL (A2)
SCALE: 1/2" = 1'-0" F-109

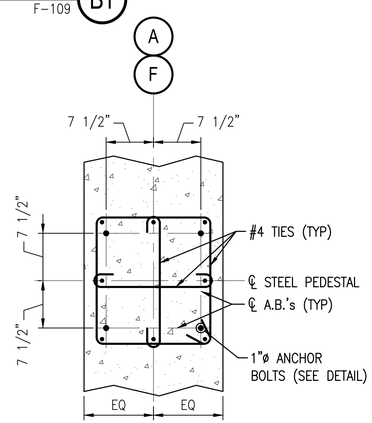

SECTION (A3)
SCALE: 1" = 1'-0" F-510

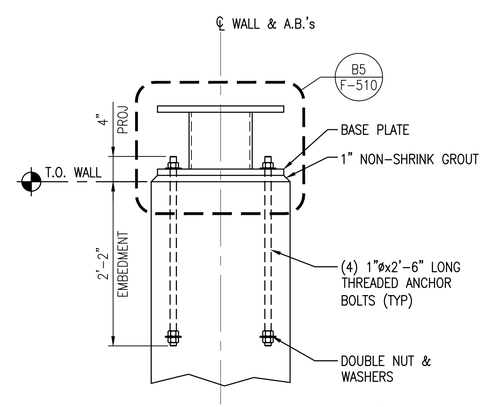

ANCHOR BOLT DETAIL (A4)
SCALE: 1" = 1'-0"

Scale: 1 1/2" = 1'-0"
Scale: 1" = 1'-0"
Scale: 1/2" = 1'-0"

SYM	DESCRIPTION	DATE	APPR
0	ISSUED FOR CONSTRUCTION	10/28/2016	CBC

NAVFAC

STATE OF MAINE — BRIAN J. BEAULIEU No. 12004 — LICENSED PROFESSIONAL ENGINEER — 10/28/16 — SEAL

Colby Company engineering — A/E INFO

APPROVED: David W. Grunfeld
FOR COMMANDER NAVFAC

ACTIVITY: TIM FISHER, C. 2370.6 BRANCH HEAD
SATISFACTORY TO DATE 10/28/2016

DES	KRS	DRW TJG	CHK CBC
PM/DM	PETER STOCKLESS		
BRANCH MANAGER	IAN BODWELL		
FEAD/PM&E	AMIN BAHROUR		
FIRE PROTECTION	PATRICK BAKAJ		

DEPARTMENT OF THE NAVY — NAVAL FACILITIES ENGINEERING COMMAND — PUBLIC WORKS DEPARTMENT - MAINE
NAVAL FACILITIES ENGINEERING COMMAND ~ MID-ATLANTIC — NAVAL SHIPYARD - PORTSMOUTH, NH
PORTSMOUTH NAVAL SHIPYARD — KITTERY, ME
DRY DOCK #1 DEFUELING COMPLEX
SITE & FOUNDATIONS
RAE SP-6 & RAE-4 STORAGE FNDN SECTIONS AND DETAILS

EPROJECT NO.: 1363311
CONSTR. CONTR. NO.: N40085-17-C-5002
NAVFAC DRAWING NO.: 12734776
SHEET 39 OF 46
F-510 | DD1-16-857

DRAWFORM REVISION: 10 OCTOBER 2014

10/28/2016 7:55:11 AM X:\297 PORTSMOUTH NAVAL SHIPYARD\297.005.001 - DD#1 DEFUELING COMPLEX DESIGN\DRAWINGS\SITE - FOUNDATIONS\SHEETS\F-510.DWG

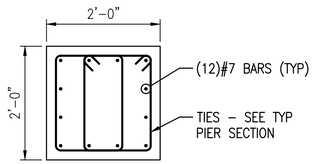

JP JACKING PAD

SCALE: 3/4" = 1'-0" F-104 (C1)

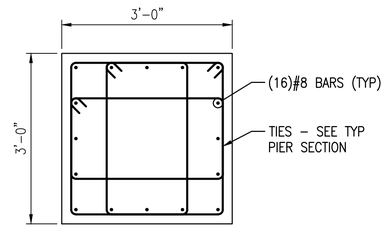

JSP JACK STAND PAD

SCALE: 3/4" = 1'-0" F-104 (C2)

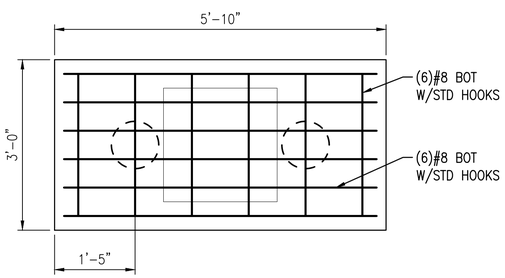

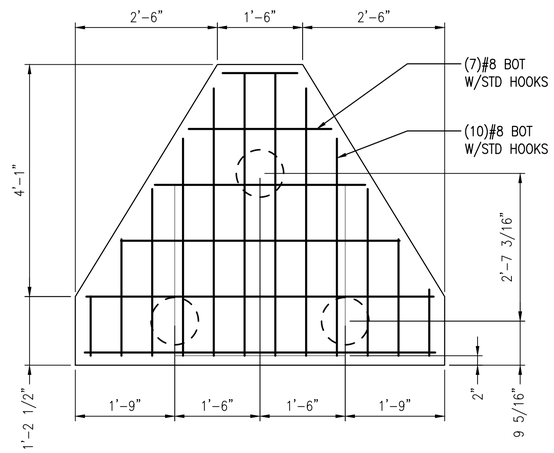

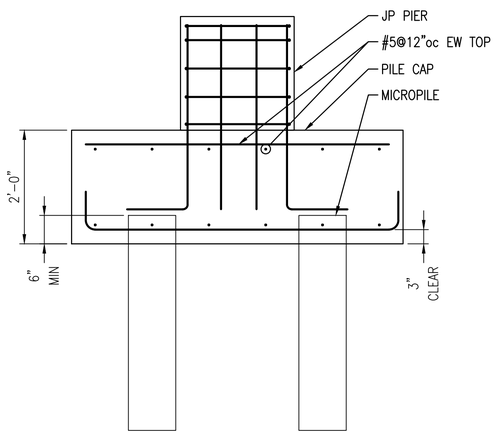

PILE CAP PC1

SCALE: 3/4" = 1'-0" F-104 (A1)

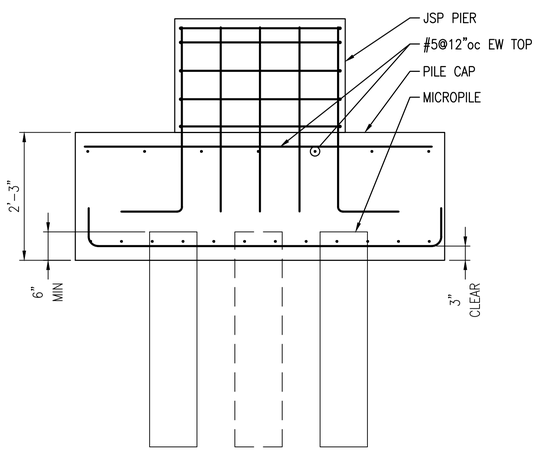

PILE CAP PC2

SCALE: 3/4" = 1'-0" F-104 (A2)

0 1' 2' 3'
Scale: 3/4" = 1'-0"

SYM	DESCRIPTION	DATE	APPR
0	ISSUED FOR CONSTRUCTION	10/28/2016	CBC

NAVFAC

STATE OF MAINE
BRIAN J. BEAULIEU
No. 12004
LICENSED
PROFESSIONAL ENGINEER
10/28/16
SEAL

Colby Company engineering
A/E INFO

APPROVED
David W. Grunfeld
FOR COMMANDER NAVFAC

ACTIVITY
TIM FISHER
C. 2370.6 BRANCH HEAD

SATISFACTORY TO DATE 10/28/2016

DES XXX DRW BCH CHK CBC

PMDM PETER STOCKLESS
BRANCH MANAGER IAN BODWELL
FEAD/PM&E AMIN BAHROUR
FIRE PROTECTION PATRICK BAKAJ

DEPARTMENT OF THE NAVY
NAVAL FACILITIES ENGINEERING COMMAND
PUBLIC WORKS DEPARTMENT - MAINE

NAVAL FACILITIES ENGINEERING COMMAND ~ MID-ATLANTIC
NAVAL SHIPYARD - PORTSMOUTH, NH

PORTSMOUTH NAVAL SHIPYARD
KITTERY, ME

DRY DOCK #1 DEFUELING COMPLEX
SITE & FOUNDATIONS

M140 PIER AND PILE CAP DETAILS

EPROJECT NO.: 1363311

CONSTR. CONTR. NO.
N40085-17-C-5002

NAVFAC DRAWING NO.
12734777

SHEET 40 OF 46

F-511 DD1-16-858

DRAWFORM REVISION: 10 OCTOBER 2014

10/28/2016 7:55:22 AM X:\297 PORTSMOUTH NAVAL SHIPYARD\297.005.001 - DD#1 DEFUELING COMPLEX DESIGN\DRAWINGS\SITE - FOUNDATIONS\SHEETS\F-511.DWG

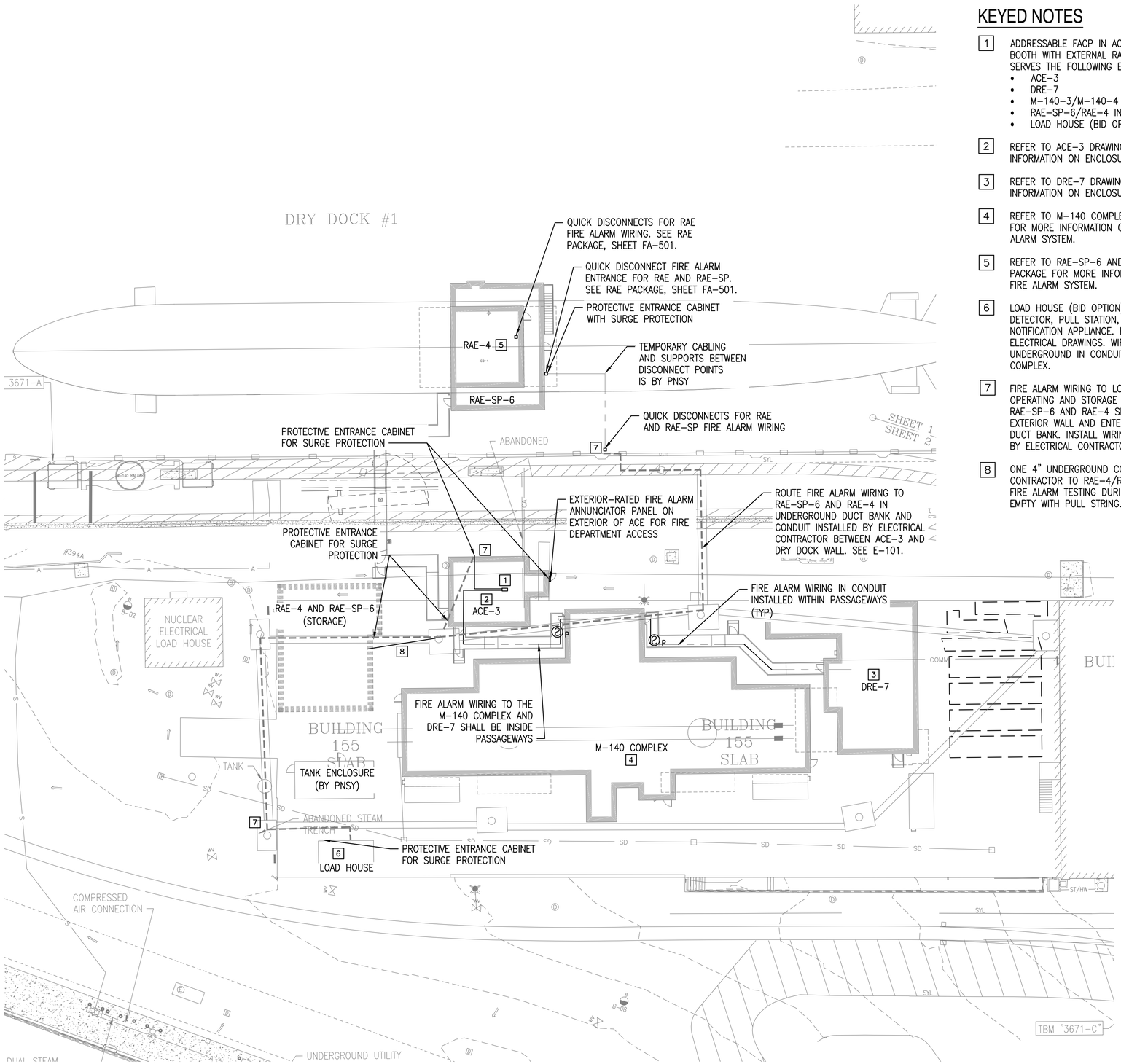

FIRE ALARM SITE PLAN

SCALE: 1" = 20'

KEYED NOTES

1. ADDRESSABLE FACP IN ACE-3 RADCON TECHNICIAN BOOTH WITH EXTERNAL RADIO TRANSMITTER. SERVES THE FOLLOWING ENCLOSURES:
   - ACE-3
   - DRE-7
   - M-140-3/M-140-4 COMPLEX
   - RAE-SP-6/RAE-4 IN OPERATING POSITION
   - LOAD HOUSE (BID OPTION)
2. REFER TO ACE-3 DRAWING PACKAGE FOR MORE INFORMATION ON ENCLOSURE FIRE ALARM SYSTEM.
3. REFER TO DRE-7 DRAWING PACKAGE FOR MORE INFORMATION ON ENCLOSURE FIRE ALARM SYSTEM.
4. REFER TO M-140 COMPLEX DRAWING PACKAGE FOR MORE INFORMATION ON ENCLOSURE FIRE ALARM SYSTEM.
5. REFER TO RAE-SP-6 AND RAE-4 DRAWING PACKAGE FOR MORE INFORMATION ON ENCLOSURE FIRE ALARM SYSTEM.
6. LOAD HOUSE (BID OPTION) WILL HAVE A SMOKE DETECTOR, PULL STATION, AND HORN/STROBE NOTIFICATION APPLIANCE. REFER TO LOAD HOUSE ELECTRICAL DRAWINGS. WIRING WILL BE ROUTED UNDERGROUND IN CONDUIT FROM THE M-140 COMPLEX.
7. FIRE ALARM WIRING TO LOAD HOUSE AND OPERATING AND STORAGE LOCATIONS OF RAE-SP-6 AND RAE-4 SHALL PENETRATE ACE-3 EXTERIOR WALL AND ENTER AN UNDERGROUND DUCT BANK. INSTALL WIRING IN CONDUIT PROVIDED BY ELECTRICAL CONTRACTOR. SEE E-101.
8. ONE 4" UNDERGROUND CONDUIT BY ELECTRICAL CONTRACTOR TO RAE-4/RAE-SP-6 STORAGE FOR FIRE ALARM TESTING DURING CONSTRUCTION. LEAVE EMPTY WITH PULL STRING. SEE E-101.

NOTES

1. REFER TO SPECIFICATION SECTION 00 22 13.00 20 FOR A LIST OF BID OPTIONS FOR THIS PROJECT.
2. ADDRESSABLE FIRE ALARM CONTROL PANEL (FACP) TO BE LOCATED IN THE ACE-3 ENCLOSURE. EXTERNAL KING FISHER 16-ZONE RADIO TRANSMITTER TO BE INSTALLED TO INTEGRATE WITH THE EXISTING BASE SUPERVISING STATION.
3. INTEGRATION OF NEW FACP INTO BASE SUPERVISING STATION IN BUILDING 29 SHALL BE BY OTHERS.
4. FACP IN ACE-3 SHALL PROVIDE POWER AND MONITORING FOR THE REMOTE ANNUNCIATOR ON THE EXTERIOR OF THE ACE-3. ANNUNCIATOR SHALL BE NEMA 4X RATED AND INSTALLED IN MANUFACTURER'S WEATHERPROOF ENCLOSURE WITH A 24 VAC HEATER. FIRE ALARM CONTRACTOR TO PROVIDE 24 VDC AND 24 VAC POWER SUPPLIES.
5. THE DD#1 FIRE ALARM SYSTEM SHALL UTILIZE AN EXTERNAL 16-ZONE RADIO TRANSMITTER MANUFACTURED BY KING FISHER. THE TRANSMITTER SHALL BE PROGRAMMED TO SEND THE FOLLOWING TRANSMISSION ZONES (TZ) TO THE BASE SUPERVISING STATION:

   TZ-1: ACE
   TZ-2: DRE-7
   TZ-3: LOAD HOUSE
   TZ-4: RAE-SP-6 COAMING AREA
   TZ-5: RAE-SP-6 STAGING AREA
   TZ-6: RAE-4
   TZ-7: M-140-3 AND M-140-4 GROUND LEVEL
   TZ-8: M-140-3 TOWER
   TZ-9: M-140-4 TOWER
   TZ-10: M-140-3 AND M-140-4 STORAGE ENCLOSURES AND STAIRWAYS
   TZ-11: M-140-3 AND M-140-4 EXTERIOR STAIR TOWER

6. THE DD#1 FIRE ALARM CONTROL PANEL SHALL HAVE A 24-BUTTON PROGRAMMABLE INPUT SWITCH MODULE CAPABLE OF ENABLING SPECIFIC "ZONES" TO BE DISCONNECTED FROM THE FACP FOR MAINTENANCE PURPOSES. THE FOLLOWING INITIATING DEVICE DISCONNECT ZONES (DZ) SHALL BE PROGRAMMED BY THE FIRE ALARM CONTRACTOR:

   DZ-1: ACE
   DZ-2: DRE-7
   DZ-3: LOAD HOUSE
   DZ-4: RAE-SP-6 COAMING AREA
   DZ-5: RAE-SP-6 STAGING AREA
   DZ-6: RAE-4
   DZ-7: M-140-3 AND M-140-4 GROUND LEVEL
   DZ-8: M-140-3 TOWER
   DZ-9: M-140-4 TOWER
   DZ-10: M-140-3 AND M-140-4 STORAGE ENCLOSURES AND STAIRWAYS
   DZ-11: M-140-3 AND M-140-4 EXTERIOR STAIR TOWER

7. THE FIRE ALARM CONTRACTOR SHALL PROVIDE NOTIFICATION APPLIANCE EXTENDER POWER SUPPLIES AS NEEDED BASED ON VOLTAGE DROP CALCULATIONS.
8. EXTERIOR QUICK DISCONNECT LOCATIONS FOR RAE AND RAE-SP FIRE ALARM WIRING TO BE DETERMINED IN FIELD IN CONJUNCTION WITH PNSY. FIRE ALARM WIRING LENGTHS AND MAXIMUM VOLTAGE DROPS FOR SIZING CALCULATIONS TO BE PERFORMED AFTER THESE LOCATIONS HAVE BEEN DETERMINED OR A SUITABLE, CONSERVATIVE ALLOWANCE HAS BEEN DISCUSSED WITH PNSY.
9. FIRE ALARM CIRCUITS SHALL BE SIZED TO HAVE A MINIMUM OF 25% SPARE CAPACITY PER THE SPECIFICATIONS.
10. ALL FIRE ALARM WIRING SHALL BE CLASS B AND INSTALLED IN CONDUIT.
11. FIRE ALARM WIRING SHALL BE ROUTED INDOORS, WITHIN ENCLOSURES AND PASSAGEWAYS, WITH THE EXCEPTION OF WIRING BETWEEN THE ACE AND RAE/RAE-SP AND DEFUELING FACILITY LOAD HOUSE.
12. LOW VOLTAGE SURGE PROTECTION SHALL BE PROVIDED FOR CIRCUITS LOCATED OUTDOORS PER THE SPECIFICATIONS.
13. MEANS FOR DISCONNECTING/RECONNECTING THE RAE AND RAE-SP BETWEEN OPERATING AND STORAGE POSITIONS WILL BE VIA APPROVED PLUGS. WHEN RAE AND RAE-SP ARE IN STORAGE, THEIR FIRE ALARM CIRCUITS WILL BE RELOCATED TO A CABINET OF ADDRESSABLE DEVICES ADJACENT TO THE FACP. SEE THE ACE DRAWING PACKAGE, SHEET FA-100, AND SPECIFICATIONS FOR ADDITIONAL INFORMATION.

0 20' 40'
Scale: 1" = 20'-0"

SYM	DESCRIPTION	DATE	APPR
0	ISSUED FOR CONSTRUCTION	10/28/2016	CBC

NAVFAC

STATE OF MAINE
EMILY PINYARD
No. 12126
LICENSED PROFESSIONAL ENGINEER
10/28/16
SEAL

Colby Company engineering
A/E INFO

APPROVED FOR COMMANDER NAVFAC: David W. Grunfeld
FOR COMMANDER NAVFAC
ACTIVITY: TIM FISHER, C. 2370.6 BRANCH HEAD
SATISFACTORY TO DATE: 10/28/2016

DES	ERP	DRW	CSS	CHK	WEP
PM/DM	PETER STOCKLESS				
BRANCH MANAGER	IAN BODWELL				
FEAD/PM&E	AMIN BAHROUR				
FIRE PROTECTION	PATRICK BAKAJ				

DEPARTMENT OF THE NAVY
NAVAL FACILITIES ENGINEERING COMMAND
PUBLIC WORKS DEPARTMENT - MAINE
PORTSMOUTH NAVAL SHIPYARD
NAVAL FACILITIES ENGINEERING COMMAND – MID-ATLANTIC
NAVAL SHIPYARD - PORTSMOUTH NH
KITTERY, ME
DRY DOCK #1 DEFUELING COMPLEX
SITE & FOUNDATIONS
FIRE ALARM SITE PLAN

EPROJECT NO.: 1363311
CONSTR. CONTR. NO.: N40085-17-C-5002
NAVFAC DRAWING NO.: 12734778
SHEET 41 OF 46
FA-101 | DD1-16-859

DRAWFORM REVISION: 10 OCTOBER 2014

10/28/2016 7:55:46 AM X:\297 PORTSMOUTH NAVAL SHIPYARD\297.005.001 - DD#1 DEFUELING COMPLEX DESIGN\DRAWINGS\SITE - FOUNDATIONS\SHEETS\FA-101.DWG

LIGHTING

- Ab — 2x4 FLUORESCENT FIXTURE
  - ASSOCIATED CONTROL DEVICE
  - FIXTURE TYPE (SEE LIGHT FIXTURE SCHED.)
- FLUORESCENT WRAP AROUND FIXTURE
- WALL MOUNTED FIXTURES
- PORTABLE WORK LIGHT
- EXIT SIGN, CEILING MOUNTED
  - SHADING INDICATES SIGN FACE
  - ARROW INDICATES EGRESS DIRECTION
- EXIT SIGN, WALL MOUNTED
- DUAL HEAD EMERGENCY LIGHT BATTERY PACK
- REMOTE EMERGENCY LIGHTING HEAD
- AA — WALLPACK
  - FIXTURE TYPE (SEE LIGHT FIXTURE SCHED.)
- HOME RUN
- S_3 — 3-WAY TOGGLE SWITCH
- S_4 — 4-WAY TOGGLE SWITCH
- S_a — SINGLE POLE TOGGLE SWITCH
  - INDICATES CONTROLLED FIXTURE
- LC — LIGHTING CONTACTOR
- TC — TIME CLOCK
- AA,45 — FLOOD LIGHT
  - INDICATES MOUNTING ANGLE (FROM VERTICAL)
  - FIXTURE TYPE (SEE LIGHT FIXTURE SCHED.)

COMMUNICATIONS

- TELEPHONE SYSTEM WALL JACK
- DATA SYSTEM OUTLET
- COMBINATION VOICE/DATA SYSTEM OUTLET
- S 2 — SPEAKER, CEILING MOUNTED
  - 1 – FLUSH
  - 2 – SURFACE
  - 3 – HORN
  - 4 – DUAL HORN
- S — SPEAKER, WALL MOUNTED
- HS — INTERCOM SYSTEM HANDS-FREE STATION
- DS — INTERCOM SYSTEM DOOR STATION
- CCTV — CLOSED CIRCUIT TELEVISION OUTLET, MOUNT 18" AFF UNLESS OTHERWISE NOTED

SECURITY

- IDS DS — INTRUSION DETECTION SYSTEM ALARM POINT
  - DS – MAGNETIC DOOR SWITCH
  - MS – MOTION SENSOR
  - C – CAMERA
- CARD — SECURITY SYSTEM CARD READER

FIRE ALARM

- F WP — FIRE ALARM MANUAL PULL STATION
  - WEATHERPROOF
- 2 P — SMOKE DETECTOR. CEILING MOUNTED
  - A – AUXILIARY CONTACT
  - H – HEAT/SMOKE
  - P – PHOTOELECTRIC SMOKE
  - PH – PHOTOELECTRIC/HEAT SMOKE
- WP — FIRE ALARM HORN/STROBE NOTIFICATION APPLIANCE (GENERAL EVACUATION) – CLEAR STROBE COLOR
  - INDICATES WEATHER PROOF
  - INDICATES CANDELA INTENSITY

POWER

- 60 J (4) — NON-FUSED SAFETY SWITCH
  - NEMA ENCLOSURE
  - AMPERE RATING
- (4) F J 60AS 40AF — FUSED SAFETY SWITCH, TOP NUMBER INDICATES SWITCH AMPERE RATING, LOWER NUMBER INDICATES FUSE RATING
  - NEMA ENCLOSURE
- 1 (4) — MAGNETIC MOTOR STARTER, FVNR UNLESS INDICATED OTHERWISE
  - NEMA ENCLOSURE
  - NEMA SIZE (TYP.)
- 5 XP — ELECTRIC MOTOR, NUMBER INDICATES HORSEPOWER RATING
  - XP – EXPLOSION PROOF
- CONDUIT TURNING UP
- CONDUIT TURNING DOWN
- E — DUPLEX RECEPTACLE, NEMA 5-20R
  - E – INSTALLED ON EMERGENCY CIRCUIT
  - IG – ISOLATED GROUND
  - S – SWITCHED RECEPTACLE
- DOUBLE DUPLEX (QUADRUPLEX) RECEPTACLE, NEMA 5-20R
- WP — GFCI DUPLEX RECEPTACLE, NEMA 5-20R
  - WEATHER PROOF
- POWER RECEPTACLE, 250 VOLT NEMA L6-30R
- POWER RECEPTACLE, 440 VOLT NEMA CONFIGURATION AS NOTED
- DUPLEX RECEPTACLE, NEMA 5-20R, CEILING OUTLET
- PANELBOARD, NORMAL POWER
- PANELBOARD, EMERGENCY POWER
- CB 100A — ENCLOSED CIRCUIT BREAKER
  - AMPERE RATING
- J — JUNCTION BOX, SIZE AS REQUIRED
- M — MANUAL MOTOR STARTER, TOGGLE OPERATED; MULTIPLE PHASE, 1, 2, OR 3 POLE AS REQUIRED; PROVIDE WITH INTEGRAL OVERLOAD PROTECTION
- W — WALL BOX (FLUSH MOUNTED, UNLESS NOTED)
- T — TERMINAL BLOCK
- VFD — VARIABLE FREQUENCY DRIVE
- PB — PUSHBUTTON SWITCH, MOUNTED 48" AFF

SITE/GROUNDING

- COPPER CLAD STEEL GROUND ROD
- EXOTHERMIC WELD CONNECTION
- G — BARE COPPER CONDUCTOR EXPOSED
- G — BARE COPPER CONDUCTOR BELOW GRADE
- G — BARE COPPER CONDUCTOR EMBEDDED IN CONCRETE
- EGB — ELECTRICAL SERVICE GROUND BUS
- TGB — TELECOMMUNICATIONS GROUNDING BLOCK
- CEE — CONCRETE ENCASED ELECTRODE
- UE — UNDERGROUND ELECTRIC

LINE TYPES

- EXISTING
- NEW
- MATCHLINE
- PART PLAN OUTLINE

ONE-LINE DIAGRAM

- X — MOLDED CASE CIRCUIT BREAKER
  - AMPS
- DISCONNECT, ISOLATION OR SAFETY SWITCH
- FUSED DISCONNECT, ISOLATION OR SAFETY SWITCH
- MEDIUM VOLTAGE MOTOR STARTER
- CAPACITOR
- DRAWOUT DEVICE
- GROUND
- FUSE
- ISOLATION TRANSFORMER
  - CONNECTION (DETLA-WYE)
- POWER TRANSFORMER
  - CONNECTION (DELTA-WYE)
- 1/2 — MOTOR, NUMBER INDICATES HORSEPOWER
- KWH — METER
  - A — AMMETER
  - HZ — FREQUENCY METER
  - KWH — KILOWATT HOUR
  - KVAR — KILOVAR METER
  - PZ — POWER FACTOR METER
  - V — VOLTMETER
  - VAR — VAR METER
  - W — WATTMETER
  - WH — WATT HOURMETER
- DPM — DIGITAL POWER METER
- SPD — SURGE PROTECTIVE DEVICE
- PORTABLE CABLE MALE PLUG
- PORTABLE CABLE FEMALE RECEPTACLE
- DISCONNECT INTERLOCKED MALE RECEPTACLE

ABBREVIATIONS

AMP	AMPERE
AFF	ABOVE FINISHED FLOOR
AFG	ABOVE FINISHED GRADE
AHJ	AUTHORITY HAVING JURISDICTION
AIC	AMPERE INTERRUPTING CAPACITY
AWG	AMERICAN WIRE GAUGE
BFG	BELOW FINISHED GRADE
BLDG	BUILDING
BOS	BOTTOM OF STEEL
C	CONDUIT
CATV	CABLE TELEVISION
CB	CIRCUIT BREAKER
CCTV	CLOSED CIRCUIT TELEVISION
CT	CURRENT TRANSFORMER
CU	COPPER
DB	DIRECT BURIED
DISCO	DISCONNECT
DN	DOWN
EMT	ELECTRICAL METALLIC TUBING
EWC	ELECTRIC WATER COOLER
EWH	ELECTRIC WATER HEATER
EQP	EQUIPMENT
EXIST	EXISTING
FAA	FIRE ALARM ANNUNCIATOR
FACP	FIRE ALARM CONTROL PANEL
FBO	FURNISHED BY OTHERS
FLR	FLOOR
FVNR	FULL VOLTAGE NON REVERSING
FWE	FURNISHED WITH EQUIPMENT
FU	FUSE
GEN	GENERATOR
GFCI	GROUND FAULT CIRCUIT INTERRUPT
CLG	CEILING
GND	GROUND
HP	HORSEPOWER
HTR	HEATER
IG	ISOLATED GROUND
IMC	INTERMEDIATE METAL CONDUIT
K	KILO
KA	KILO-AMP
KCMIL	THOUSAND CIRCULAR MILS
KV	KILOVOLT
KVA	KILOVOLT-AMPERE
KW	KILOWATT
KWH	KILOWATT-HOUR
LA	LIGHTNING ARRESTER
LTG	LIGHTING
LFMC	LIQUID-TIGHT FLEXIBLE METAL CONDUIT
MAX	MAXIMUM
MC	METAL CLAD
MCB	MAIN CIRCUIT BREAKER
MFR	MANUFACTURER
MLO	MAIN LUG ONLY
MOP	MAXIMUM OVERCURRENT PROTECTION
MS/TP	MASTER-SLAVE TOKEN-PASSING
MTD	MOUNTED
MV	MEDIUM VOLTAGE
NC	NORMALLY CLOSED
NEC	NATIONAL ELECTRIC CODE
NEG	NEGATIVE
NEUT	NEUTRAL
NIC	NOT IN CONTRACT
NO	NORMALLY OPEN
NTS	NOT TO SCALE
PH	PHASE
PLC	PROGRAMMABLE LOGIC CONTROLLER
PV	PHOTOVOLTAIC
PVC	POLYVINYL CHLORIDE
RM	ROOM
RGS	RIGID GALVANIZED STEEL CONDUIT
RSC	RIGID STEEL CONDUIT
RTU	ROOF TOP UNIT
SWBD	SWITCHBOARD
TGB	TELECOMMUNICATIONS GROUNDING BUSBAR
TOS	TOP OF STEEL
TANSF	TRANSFORMER
TVSS	TRANSIENT VOLTAGE SURGE SUPPRESSOR
TX	TRANSFORMER
V	VOLT
VA	VOLT-AMPERE
VFD	VARIABLE FREQUENCY DRIVE
WM	WATT METER
WP	WEATHER PROOF
XFMR	TRANSFORMER
XP	EXPLOSION PROOF

GENERAL NOTES

1. ALL GENERAL NOTES, SYMBOL LISTS AND DETAILS ARE TO BE CONSIDERED AS APPLICABLE TO ALL ELECTRICAL DRAWINGS FOR THIS PROJECT. SYMBOLS AND ABBREVIATIONS SHOWN ON THIS SHEET ARE FOR REFERENCE ONLY AND DO NOT INDICATE THEIR INCORPORATION IN THE DESIGN.
2. ALL WORK SHALL BE PERFORMED IN ACCORDANCE WITH NFPA-70, NATIONAL ELECTRICAL CODE (NEC) 2014.
3. ALL CONDUCTOR MATERIAL, INCLUDING WIRING, PANELBOARD BUSES, TRANSFORMER WINDINGS, AND GROUNDING SHALL BE COPPER. ALUMINUM CONDUCTORS SHALL NOT BE ALLOWED.
4. UNLESS OTHERWISE NOTED, WIRING SHALL BE 2#12 AWG CONDUCTORS AND #12 GND. HOME RUNS FED FROM 20A-1P CIRCUITS IN EXCESS OF 100 FEET SHALL BE #10 AWG.
5. FLEXIBLE CONNECTIONS TO MOTORS SHALL BE LIQUID TIGHT FLEXIBLE METAL CONDUIT, UNLESS OTHERWISE NOTED.
6. LIGHTING TOGGLE SWITCHES SHALL BE COMMERCIAL SPECIFICATION GRADE 277/120 VOLT, SIDE WIRED AND PROVIDED WITH GROUNDING SCREW. LEVITON, PASS AND SEYMOUR OR APPROVED EQUAL.
7. CONVENIENCE RECEPTACLES SHALL BE COMMERCIAL SPECIFICATION GRADE GROUNDING TYPE NEMA 5-20R, SIDE WIRED. LEVITON, PASS AND SEYMOUR OR APPROVED EQUAL.
8. PROVIDE WALL PLATES FOR ALL WIRING DEVICES. ALL PLATES SHALL BE STAINLESS STEEL.
9. ALL INTERIOR DISTRIBUTION AND BRANCH WIRING SHALL BE 600V, COPPER WITH THHN/THWN INSULATION, UNLESS OTHERWISE NOTED. ALL EXTERIOR DISTRIBUTION AND BRANCH WIRING SHALL BE 600V, COPPER WITH XHHW INSULATION.
10. MOUNT ALL DISCONNECTS AND MOTOR STARTERS IN AN ACCESSIBLE LOCATION WITHIN SIGHT OF THE LOAD SERVED, UNLESS OTHERWISE INDICATED ON PLANS.
11. UNLESS OTHERWISE NOTED CONVENIENCE RECEPTACLES SHALL BE MOUNTED 18-INCHES AFF, PHONE SYSTEM OUTLETS 60-INCHES AFF, INTERCOM SYSTEM OUTLETS 60-INCHES AFF, AND LIGHTING TOGGLE SWITCHES 48-INCHES AFF.
12. ALL PENETRATIONS THROUGH FLOORS, RATED WALLS AND PARTITIONS SHALL BE SEALED WITH UL APPROVED FIRE SEALANT MATERIAL TO MAINTAIN THE RATING OF SEPARATION.
13. COORDINATE ALL EQUIPMENT CONNECTIONS – INCLUDING DISCONNECTING MEANS, OVERCURRENT PROTECTION, AND WIRE SIZING – WITH SELECTED MANUFACTURERS' RECOMMENDED INSTRUCTIONS.
14. PROVIDE ALL MOUNTING HARDWARE NECESSARY FOR A COMPLETE INSTALLATION. MOUNT EQUIPMENT AND ROUTE CONDUIT SO AS NOT TO INTERFERE WITH OPERATIONS SUCH AS DOOR SWINGS, MECHANICAL EQUIPMENT, ETC.
15. MANUFACTURERS NAME AND MODEL NUMBERS ARE USED THROUGHOUT THE PROJECT FOR DESCRIPTIVE PURPOSES ONLY AND ARE INTENDED TO INDICATE THE STANDARD OF MATERIAL OR ARTICLES REQUIRED. DESIGN IS PREDICATED AROUND LISTED MANUFACTURERS AS NOTED ON SCHEDULES AND NOTES AND IS NOT INTENDED TO LIMIT THE CONTRACTOR TO ONE MANUFACTURER.
16. CONTRACTOR SHALL LABEL ALL ELECTRICAL INFRASTRUCTURE INCLUDING PANELBOARDS, DISCONNECTS, JUNCTION BOXES, RECEPTACLES, TRANSFORMERS, AND CONTROL BOXES IN ACCORDANCE WITH THE PROJECT DRAWINGS, PROJECT SPECIFICATIONS, AND PNS LABELING STANDARDS. LABELING SHALL CONSIST OF EQUIPMENT, POWER SOURCE, POWER FEED, ARC-FLASH REQUIREMENTS, AND CLEARANCE REQUIREMENTS AT A MINIMUM.
17. ALL EXTERIOR ELECTRICAL BOXES SHALL BE WIRED WITH A DRIP LOOP TO PREVENT WATER INFILTRATION INTO THE BOXES. FOR ALL LOCATIONS WHERE POSSIBLE, ENTRY INTO THE BOXES SHALL BE FROM/TO THE BOTTOM OF THE ELECTRICAL BOXES. WHERE BOTTOM ENTRY NOT POSSIBLE, A MEANS OF WEATHER PROTECTION SHALL BE PROVIDED.
18. ALL SECURITY SYSTEM CARD READERS, SURVEILLANCE CAMERAS, AND MOTION SENSORS SHALL BE INSTALLED AND WIRED BY THE GOVERNMENT. CONTRACTOR SHALL PROVIDE CONDUIT PATHWAYS WITH PULL STRINGS TO THE ACE FOR ALL DEVICE WIRING. CONTRACTOR SHALL PROVIDE AND INSTALL DOOR MAGNETIC SWITCHES, WIRE THEM, THEN RUN THE WIRES TO THE SECURITY CONNECTION POINT IN ACE-3, WHERE THEY WILL BE CONNECTED BY THE GOVERNMENT.

SYM	DESCRIPTION	DATE	APPR
0	ISSUED FOR CONSTRUCTION	10/28/2016	CBC

NAVFAC

STATE OF MAINE — JASON M. BEAULIEU No. 13441 — LICENSED PROFESSIONAL ENGINEER — 10/28/16 — SEAL

Colby Company engineering — A/E INFO

APPROVED FOR COMMANDER: David W. Grunfeld

FOR COMMANDER NAVFAC

ACTIVITY: TIM FISHER, C. 2370.6 BRANCH HEAD

SATISFACTORY TO DATE 10/28/2016

DES JMB | DRW JMB | CHK MRL

PM/DM: PETER STOCKLESS

BRANCH MANAGER: IAN BODWELL

FEA/PM&E: AMIN BAHROUR

FIRE PROTECTION: PATRICK BAKAJ

DEPARTMENT OF THE NAVY
NAVAL FACILITIES ENGINEERING COMMAND
PUBLIC WORKS DEPARTMENT - MAINE

NAVAL FACILITIES ENGINEERING COMMAND – MID-ATLANTIC
NAVAL SHIPYARD - PORTSMOUTH, NH

PORTSMOUTH NAVAL SHIPYARD
KITTERY, ME

DRY DOCK #1 DEFUELING COMPLEX
SITE & FOUNDATIONS

ELECTRICAL LEGEND, ABBREVIATIONS AND GENERAL NOTES

EPROJECT NO.: 1363311

CONSTR. CONTR. NO.: N40085-17-C-5002

NAVFAC DRAWING NO.: 12734779

SHEET 42 OF 46

E-001 | DD1-16-860

DRAWFORM REVISION: 10 OCTOBER 2014

10/28/2016 7:55:57 AM X:\297 PORTSMOUTH NAVAL SHIPYARD\297.005.001 - DD#1 DEFUELING COMPLEX DESIGN\DRAWINGS\SITE - FOUNDATIONS\SHEETS\E-001.DWG

NOTES

1. SEE SHEET E-001 FOR LEGEND, ABBREVIATIONS AND GENERAL NOTES.
2. THIS SHEET INDICATES SIZES AND GENERAL LOCATIONS OF PATHWAYS FOR ELECTRICAL SYSTEMS. SEE ENCLOSURE DRAWING PACKAGES FOR MORE INFORMATION ON ENCLOSURE ELECTRICAL AND SYSTEMS REQUIREMENTS.
3. EXTERIOR ABOVE GROUND UTILITIES SHALL BE INSTALLED IN 4" LMFC. PROVIDE DEDICATED CONDUIT PER SYSTEM TYPE.

KEYED NOTES

1. ROUTE CONDUIT FROM EXISTING ABOVE GROUND CABINET INTO BUILDING 2 BASEMENT THROUGH BRICKED-UP WINDOW. COORDINATE EXACT LOCATION OF ENTRANCE WITH EXISTING EQUIPMENT. MAKE CONNECTIONS TO EXISTING TELEPHONE BACKBOARD.

2. PROVIDE GROUNDING SYSTEM FOR RAE STORAGE:
   - INSTALL MINIMUM (3) 10'x3/4"ø COPPER CLAD GROUND RODS SPACED 6FT APART.
   - BOND TO FOUNDATION REINFORCING.

LEGEND

- - - - - - - - UNDERGROUND PATHWAY

———— ABOVE GROUND PATHWAY

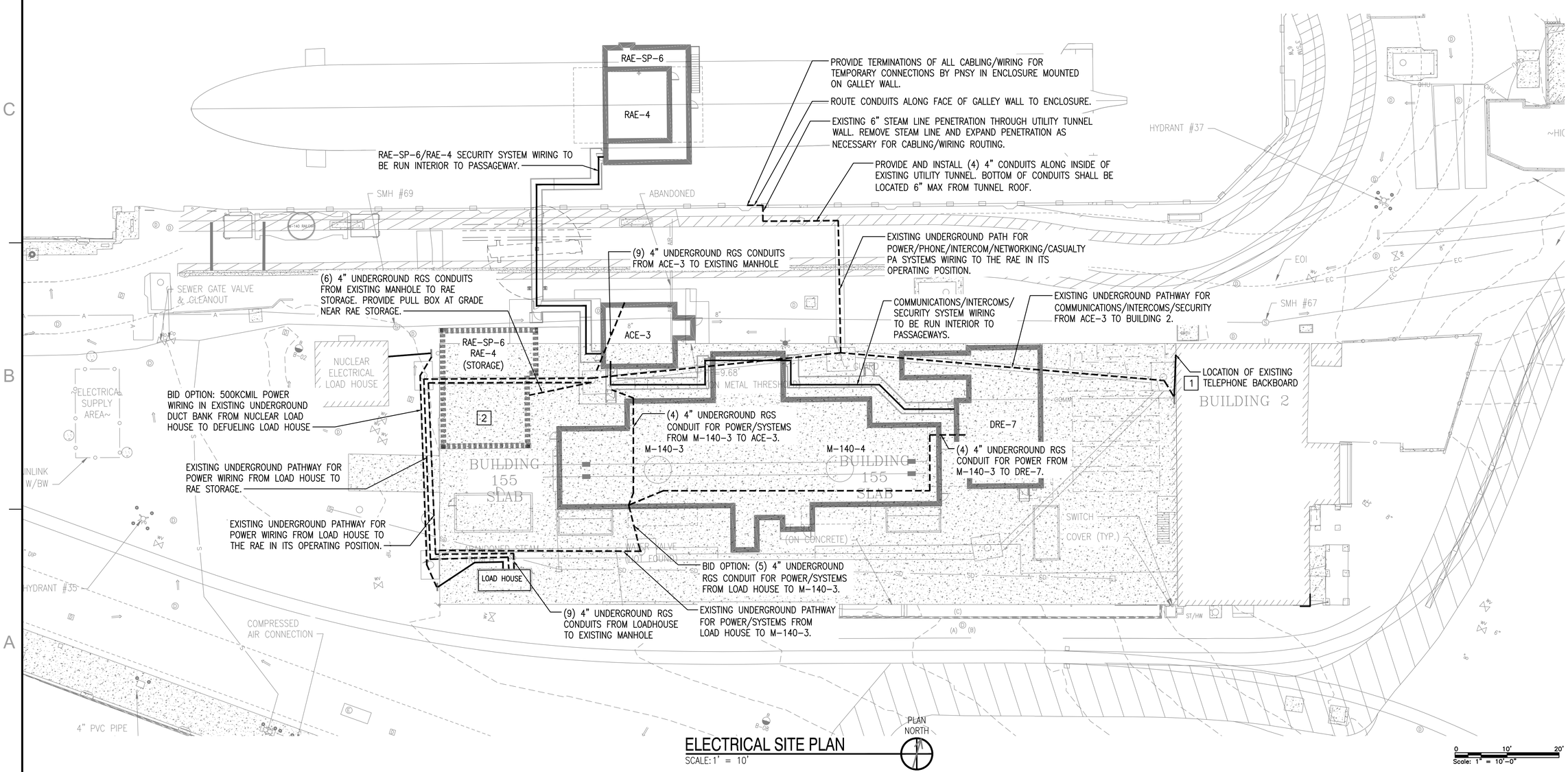

ELECTRICAL SITE PLAN

SCALE: 1' = 10'

SYM	DESCRIPTION	DATE	APPR
0	ISSUED FOR CONSTRUCTION	10/28/2016	CBC

NAVFAC

STATE OF MAINE — JASON M. BEAULIEU No. 13441 — LICENSED PROFESSIONAL ENGINEER — 10/28/16 — SEAL

Colby Company engineering — A/E INFO

APPROVED: David W. Grunfeld — FOR COMMANDER NAVFAC

ACTIVITY: TIM FISHER, C. 2370.6 BRANCH HEAD — SATISFACTORY TO DATE 10/28/2016

DES	DRW	CHK
JMB	JMB	MRL

PMDM: PETER STOCKLESS
BRANCH MANAGER: IAN BODWELL
FEAD/PM&E: AMIN BAHROUR
FIRE PROTECTION: PATRICK BAKAJ

DEPARTMENT OF THE NAVY — NAVAL FACILITIES ENGINEERING COMMAND — NAVAL FACILITIES ENGINEERING COMMAND ~ MID-ATLANTIC — PUBLIC WORKS DEPARTMENT - MAINE — NAVAL SHIPYARD - PORTSMOUTH, NH

PORTSMOUTH NAVAL SHIPYARD — KITTERY, ME

DRY DOCK #1 DEFUELING COMPLEX SITE & FOUNDATIONS

ELECTRICAL SITE PLAN

EPROJECT NO.: 1363311

CONSTR. CONTR. NO.: N40085-17-C-5002

NAVFAC DRAWING NO.: 12734780

SHEET 43 OF 46

E-101 | DD1-16-861

DRAWFORM REVISION: 10 OCTOBER 2014

10/28/2016 7:56:22 AM X:\297 PORTSMOUTH NAVAL SHIPYARD\297.005.001 - DD#1 DEFUELING COMPLEX DESIGN\DRAWINGS\SITE - FOUNDATIONS\SHEETS\E-101.DWG

CIRCUIT SCHEDULE

1. PANEL 1 #1
2. PANEL 1 #2
3. PANEL 1 #3

NOTES

1. SEE SHEET E-001 FOR LEGEND, ABBREVIATIONS AND GENERAL NOTES.
2. ALL WORK SHOWN ON THIS SHEET PART OF DEFUELING LOAD HOUSE BID OPTION.
3. PROVIDE GROUNDING SYSTEM WHICH BONDS CONTAINER AND FOUNDATION TO ELECTRICAL SYSTEM GROUND. SEE DETAIL ON SHEET E-502.
4. SEE SHEET E-501 FOR DISTRIBUTION SYSTEM ONE-LINE DIAGRAM.

KEYED NOTES

1. SEE M-140 COMPLEX PACKAGE FOR MORE INFORMATION ON FIRE ALARM SYSTEM.
2. LIGHT FIXTURES AND LIGHT SWITCH PROVIDED WITH CONTAINER. PROVIDE POWER CIRCUIT A AS SCHEDULED.
3. AC UNIT PROVIDED WITH CONTAINER. PROVIDE LOCAL DISCONNECT, COORDINATE REQUIREMENTS WITH CONTAINER SUPPLIER.

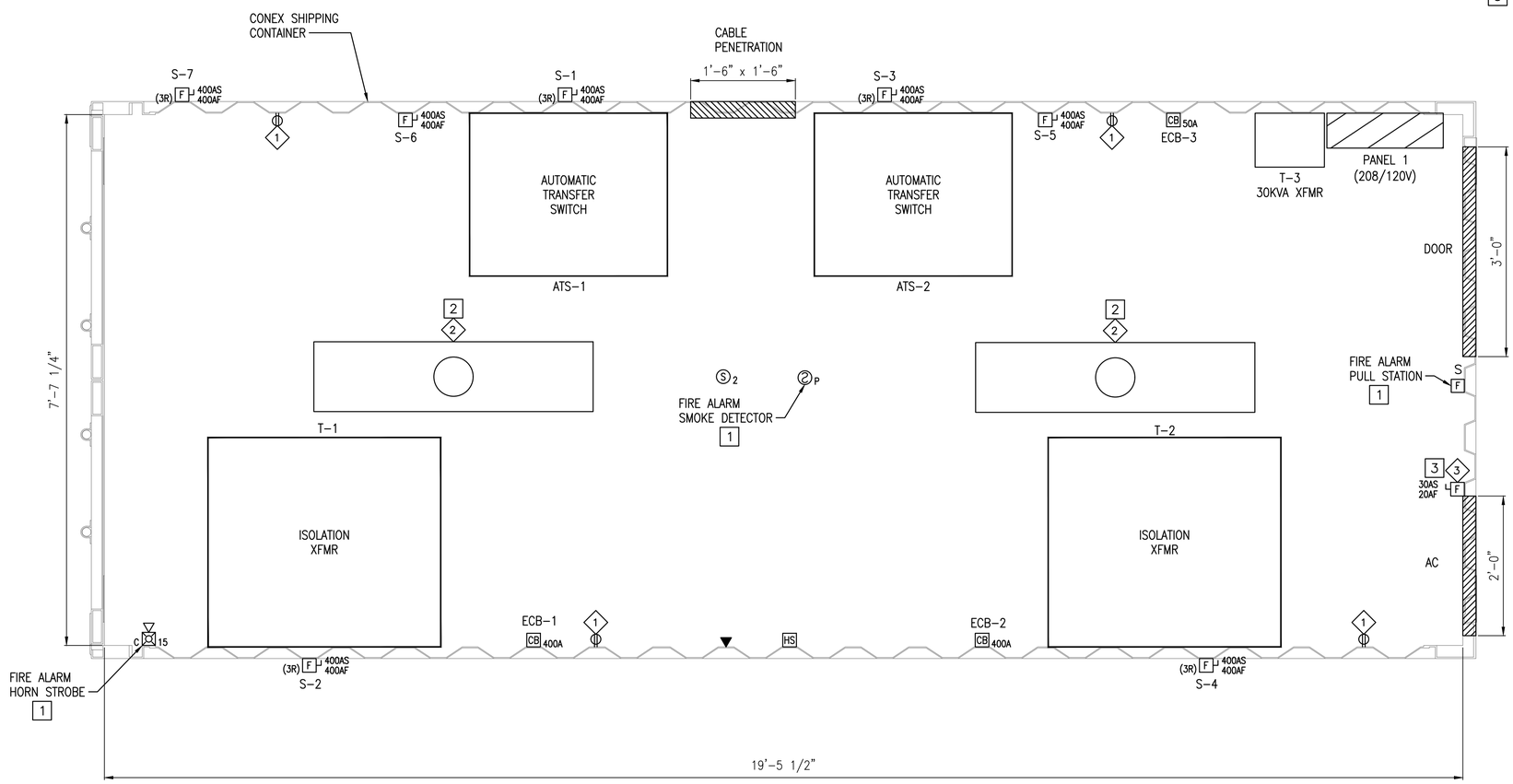

DEFUELING LOADHOUSE LAYOUT

SCALE: 1" = 1'-0"

A1

0 1/2' 1' 2'
Scale: 1" = 1'-0"

SYM	DESCRIPTION	DATE	APPR
0	ISSUED FOR CONSTRUCTION	10/28/2016	CBC

NAVFAC

STATE OF MAINE
JASON M. BEAULIEU
No. 13441
LICENSED PROFESSIONAL ENGINEER
10/28/16
SEAL

Colby Company engineering
A/E INFO

APPROVED
David W. Grunfeld
FOR COMMANDER NAVFAC

ACTIVITY
TIM FISHER
C. 2370.6 BRANCH HEAD

SATISFACTORY TO DATE 10/28/2016
DES JMB DRW JMB CHK MRL
PMDM PETER STOCKLESS
BRANCH MANAGER IAN BODWELL
FEA/DPM&E AMIN BAHROUR
FIRE PROTECTION PATRICK BAKAJ

DEPARTMENT OF THE NAVY
NAVAL FACILITIES ENGINEERING COMMAND
PUBLIC WORKS DEPARTMENT, MAINE
NAVAL FACILITIES ENGINEERING COMMAND ~ MID-ATLANTIC
NAVAL SHIPYARD, PORTSMOUTH, NH
PORTSMOUTH NAVAL SHIPYARD
KITTERY, ME
DRY DOCK #1 DEFUELING COMPLEX
SITE & FOUNDATIONS
DEFUELING LOADHOUSE LAYOUT

EPROJECT NO.: 1363311
CONSTR. CONTR. NO. N40085-17-C-5002
NAVFAC DRAWING NO. 12734781
SHEET 44 OF 46
E-102 DD1-16-862

DRAWFORM REVISION: 10 OCTOBER 2014

10/28/2016 7:56:33 AM X:\297 PORTSMOUTH NAVAL SHIPYARD\297.005.001 - DD#1 DEFUELING COMPLEX DESIGN\DRAWINGS\SITE - FOUNDATIONS\SHEETS\E-102.DWG

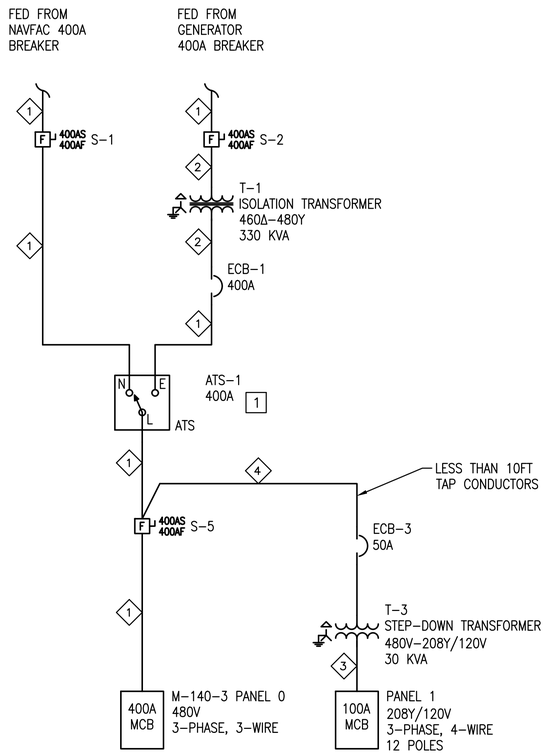

M-140 CRITICAL LOADS ONE-LINE DIAGRAM (B1)

SCALE: NTS

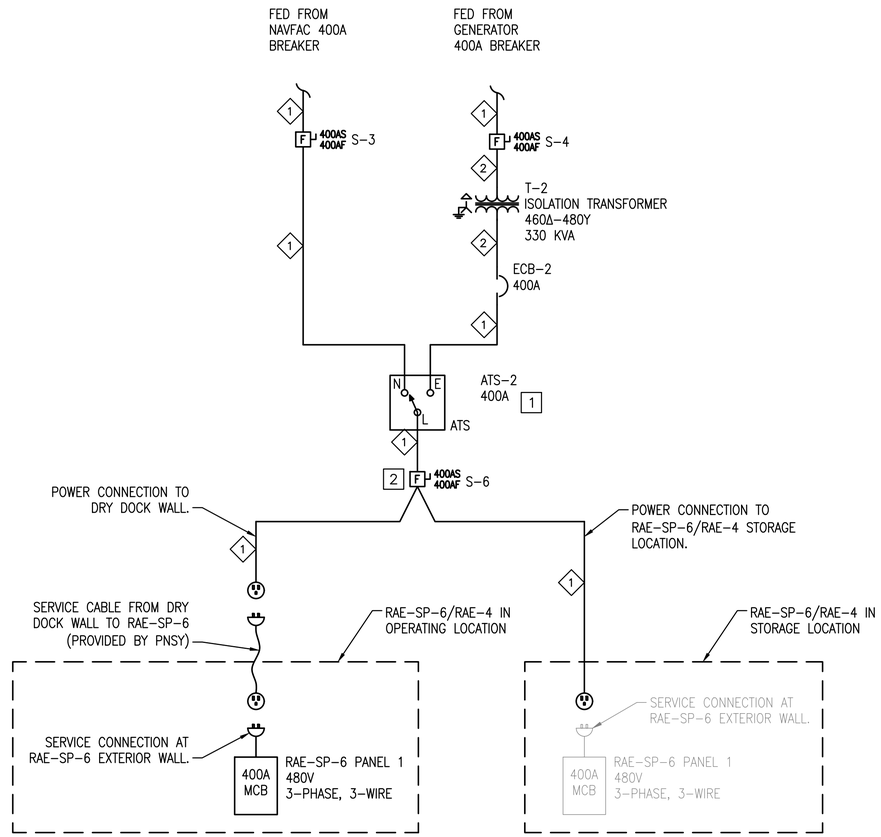

RAE-SP CRITICAL LOADS ONE-LINE DIAGRAM (B3)

SCALE: NTS

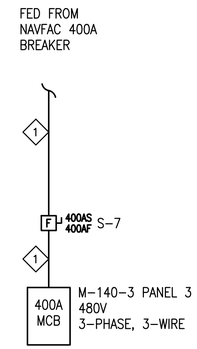

M-140 NON-CRITICAL LOADS ONE-LINE DIAGRAM (B4)

SCALE: NTS

NOTES

1. REFER TO INDIVIDUAL ENCLOSURE DRAWING PACKAGE FOR MORE INFORMATION ON ENCLOSURE ELECTRICAL SYSTEMS.
2. ONE-LINE DIAGRAMS REPRESENT WORK INCLUDED IN DEFUELING LOAD HOUSE BID OPTION.
3. NON-CRITICAL LOADS ARE HEATING/COOLING FUNCTIONS OF VENTILATION SKIDS IN M-140 COMPLEX AND DRE-7 (WITH EXCEPTION OF DRE-7 ELECTRIC COIL), AND UNIT HEATERS IN M-140 COMPLEX. CRITICAL LOADS ARE ALL REMAINING LOADS.

KEYED NOTES

1. PROVIDE POWER SOURCE INDICATION SIGNAL FROM ATS TO M-140-3 CONTROL PANEL. PROVIDE BOX MOUNT DURALINE, 30 DEGREE J-TYPE CONNECTORS FOR ALL POWER CONNECTIONS.
2. PROVIDE THREE-PHASE DOUBLE-THROW CENTER OFF SWITCH FOR TRANSFER OF POWER BETWEEN RAE OPERATING LOCATION AND STORAGE LOCATION.

CABLE SCHEDULE

1. (3) 500 KCMIL TYPE W PORTABLE CABLE
2. (3) 500 KCMIL, (1) #3 GND, IN 4" C
3. (4) #3 AWG, (1) #8 GND, IN 1-1/2" C
4. (3) #8 AWG, (1) #10 GND, IN 3/4" C

PANELBOARD NO:	PANEL 1	SC RATING:	22 KAIC		
PANELBOARD TYPE:	SQUARE D NQOD	MOUNTING:	SURFACE	100 AMP MAIN BREAKER	
PANEL LOCATION:	COMPLEX LOAD HOUSE	VOLTAGE:	208Y/120V, 3-PHASE, 4-WIRE	100 AMP BUS (COPPER)	
SUPPLIED FROM:	ATS-1				

CKT NO.	TRIP AMPS	NO. POLES	WIRE / CONDUIT	GND. WIRE	LOAD SERVED	LOAD VA	ϕ	LOAD VA	LOAD SERVED	WIRE / CONDUIT	GND. WIRE	NO. POLES	TRIP AMPS	CKT NO.
1	20	1	2#12 / 3/4"	#12	LOAD HOUSE RECEPTACLES	720	A	324	LOAD HOUSE LIGHTS	2#12 / 3/4"	#12	1	20	2
3	20	1	2#12 / 3/4"	#12	LOAD HOUSE AC	TBD	B		SPARE			1	20	4
5	20	1			SPARE		C		SPARE			1	20	6
7							A							8
9							B							10
11							C							12

TOTAL PHASE A LOAD = 1.0 KVA
TOTAL PHASE B LOAD = 0
TOTAL PHASE C LOAD = 0
TOTAL CONNECTED LOAD = 1.0 KVA

NOTES:

LOAD HOUSE PANEL 1 SCHEDULE (A3)

SCALE: NTS

SYM	DESCRIPTION	DATE	APPR
0	ISSUED FOR CONSTRUCTION	10/28/2016	CBC

NAVFAC

STATE OF MAINE JASON M. BEAULIEU No. 13441 LICENSED PROFESSIONAL ENGINEER 10/28/16 SEAL

Colby Company engineering A/E INFO

APPROVED David W. Grunfeld FOR COMMANDER NAVFAC

ACTIVITY TIM FISHER C. 2370.6 BRANCH HEAD

SATISFACTORY TO DATE 10/28/2016

DES JMB DRW JMB CHK MRL

PM/DM PETER STOCKLESS

BRANCH MANAGER IAN BODWELL

FEAD/PM&E AMIN BAHROUR

FIRE PROTECTION PATRICK BAKAJ

DEPARTMENT OF THE NAVY
NAVAL FACILITIES ENGINEERING COMMAND
PUBLIC WORKS DEPARTMENT - MAINE

NAVAL FACILITIES ENGINEERING COMMAND – MID-ATLANTIC
NAVAL SHIPYARD - PORTSMOUTH, NH

PORTSMOUTH NAVAL SHIPYARD
KITTERY, ME

DRY DOCK #1 DEFUELING COMPLEX
SITE & FOUNDATIONS

ELECTRICAL ONE-LINE DIAGRAM

EPROJECT NO.: 1363311

CONSTR. CONTR. NO. N40085-17-C-5002

NAVFAC DRAWING NO. 12734782

SHEET 45 OF 46

E-501 | DD1-16-863

DRAWFORM REVISION: 10 OCTOBER 2014

10/28/2016 7:56:44 AM X:\297 PORTSMOUTH NAVAL SHIPYARD\297.005.001 - DD#1 DEFUELING COMPLEX DESIGN\DRAWINGS\SITE - FOUNDATION\SHEETS\E-501.DWG

NOTES

1. SEE SHEET E-001 FOR LEGEND, ABBREVIATIONS AND GENERAL NOTES.

EQUIPMENT LABEL & CHARACTERISTICS (VOLTAGE, PHASE, FREQUENCY)

FED FROM PANEL XX, CIRCUIT XX

ELECTRICAL LABELING DETAIL (A1)

SCALE: NTS

NOTES:
1. LABEL SHALL BE ENGRAVED MELAMINE PLASTIC PLATES.

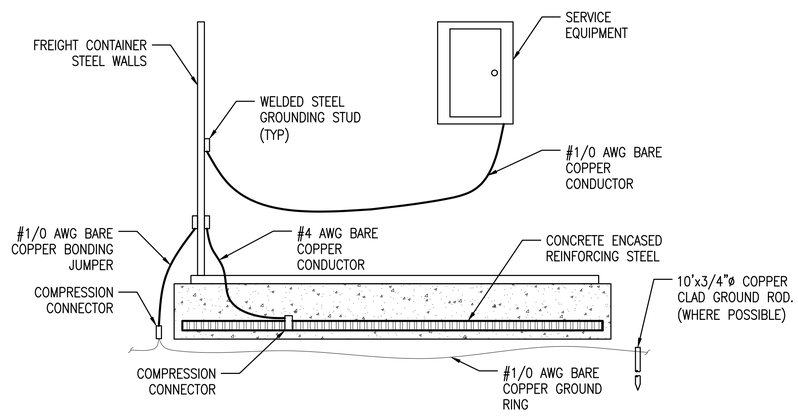

GROUNDING DIAGRAM (A2)

SCALE: NTS E-102

NOTES:
1. WHERE GROUND RODS CANNOT BE DRIVEN TO PROPER DEPTHS ENSURE STRUCTURAL FOUNDATION REINFORCING IS BONDED TO PROVIDE ADEQUATE GROUNDING.
2. WHERE GROUND RODS ARE DRIVEN, PROVIDE A MINIMUM OF 3 RODS SPACED A MINIMUM OF 10FT APART.

SYM	DESCRIPTION	DATE	APPR
0	ISSUED FOR CONSTRUCTION	10/28/2016	CBC

NAVFAC

STATE OF MAINE
JASON M. BEAULIEU
No. 13441
LICENSED
PROFESSIONAL ENGINEER
10/28/16
SEAL

Colby Company engineering
A/E INFO

APPROVED
David W. Greenfield
FOR COMMANDER NAVFAC

ACTIVITY
TIM FISHER
C. 2370.6 BRANCH HEAD

SATISFACTORY TO DATE 10/28/2016

DES JMB DRW JMB CHK MRL

PMDM PETER STOCKLESS

BRANCH MANAGER IAN BODWELL

FEA/PM&E AMIN BAHROUR

FIRE PROTECTION PATRICK BAKAJ

DEPARTMENT OF THE NAVY
NAVAL FACILITIES ENGINEERING COMMAND
PUBLIC WORKS DEPARTMENT - MAINE

NAVAL FACILITIES ENGINEERING COMMAND ~ MID-ATLANTIC
NAVAL SHIPYARD - PORTSMOUTH, NH

PORTSMOUTH NAVAL SHIPYARD
KITTERY, ME

DRY DOCK #1 DEFUELING COMPLEX
SITE & FOUNDATIONS

ELECTRICAL DETAILS

EPROJECT NO.: 1363311

CONSTR. CONTR. NO. N40085-17-C-5002

NAVFAC DRAWING NO. 12734783

SHEET 46 OF 46

E-502 DD1-16-864

DRAWFORM REVISION: 10 OCTOBER 2014

10/28/2016 7:57:00 AM X:\297 PORTSMOUTH NAVAL SHIPYARD\297.005.001 - DD#1 DEFUELING COMPLEX DESIGN\DRAWINGS\SITE - FOUNDATIONS\SHEETS\E-502.DWG