PORTSMOUTH NAVAL SHIPYARD
KITTERY, ME

DRYDOCK #1 DEFUELING COMPLEX
VOLUME 2: M-140 COMPLEX
CONTRACT NO. N40085-17-C-5002

LIST OF VOLUMES	
VOLUME:	TITLE:
1	SITE & FOUNDATIONS
2	M-140 COMPLEX
3	DRE-7
4	RAE-4 & RAE-SP-6
5	ACE-3
6	PASSAGEWAYS

DRAWING INDEX

DRAWING	TITLE	SHEET NUMBER
G-001	TITLE SHEET	1 OF 188
GA-100	GENERAL ARRANGEMENT GROUND LEVEL PLAN (NO STORAGE ENCLOSURE)	2 OF 188
GA-100A	GENERAL ARRANGEMENT - GROUND LEVEL PLAN	3 OF 188
GA-101	GENERAL ARRANGEMENT LEVEL 1 PLAN (NO STORAGE ENCLOSURE)	4 OF 188
GA-101A	GENERAL ARRANGEMENT - LEVEL 1 PLAN	5 OF 188
GA-102	GENERAL ARRANGEMENT - LEVEL 2 PLAN	6 OF 188
GA-103	GENERAL ARRANGEMENT - LEVEL 3 PLAN	7 OF 188
GA-104	GENERAL ARRANGEMENT - CRANE LEVEL PLAN	8 OF 188
GA-301	BUILDING SECTION	9 OF 188
GA-901	GENERAL ARRANGEMENT RENDERING (NO STORAGE ENCLOSURE)	10 OF 188
GA-901A	GENERAL ARRANGEMENT - RENDERING	11 OF 188
GA-902	GENERAL ARRANGEMENT RENDERING (NO STORAGE ENCLOSURE)	12 OF 188
GA-902A	GENERAL ARRANGEMENT - RENDERING	13 OF 188
LS-001	LIFE SAFETY ABBREVIATIONS AND GENERAL NOTES	14 OF 188
LS-100	GROUND LEVEL LIFE SAFETY PLAN (NO STORAGE ENCLOSURE)	15 OF 188
LS-100A	GROUND LEVEL LIFE SAFETY PLAN	16 OF 188
LS-101	LEVEL 1 LIFE SAFETY PLAN (NO STORAGE ENCLOSURE)	17 OF 188
LS-101A	LEVEL 1 LIFE SAFETY PLAN	18 OF 188
LS-102	LEVEL 2 LIFE SAFETY PLAN (NO STORAGE ENCLOSURE)	19 OF 188
LS-102A	LEVEL 2 LIFE SAFETY PLAN	20 OF 188
LS-103	LEVEL 3 LIFE SAFETY PLAN	21 OF 188
LS-104	LEVEL 4 LIFE SAFETY PLAN	22 OF 188
LS-105	CRANE LEVEL LIFE SAFETY PLAN	23 OF 188
S-001	STRUCTURAL GENERAL NOTES SHEET	24 OF 188
S-100	FRAMING PART PLANS - RAILCAR ENCLOSURES	25 OF 188
S-101	FRAMING PLAN LEVEL 1 (NO STORAGE ENCLOSURE)	26 OF 188
S-101A	FRAMING PLAN LEVEL 1	27 OF 188
S-102	FRAMING PLAN LEVEL 2 (NO STORAGE ENCLOSURE)	28 OF 188
S-102A	FRAMING PLAN LEVEL 2	29 OF 188
S-103	FRAMING PLAN LEVEL 3	30 OF 188
S-104	FRAMING PLAN LEVEL 4	31 OF 188
S-105	FRAMING PLAN LEVEL 5	32 OF 188
S-106	FRAMING PLAN AT CRANE RAIL	33 OF 188
S-107	FRAMING PLAN TOP OF ENCLOSURE	34 OF 188
S-108	FRAMING PLAN AT B.O. MOVABLE ROOF	35 OF 188
S-109	FRAMING PLAN AT T.O. MOVABLE ROOF	36 OF 188
S-201	FRAMING ELEVATION AT COLUMN LINE A	37 OF 188
S-202	FRAMING ELEVATION AT COLUMN LINE D (NO STORAGE ENCLOSURE)	38 OF 188
S-202A	FRAMING ELEVATION AT COLUMN LINE D	39 OF 188
S-203	FRAMING ELEVATION AT COLUMN LINES CC, E, AND G (NO STORAGE ENCLOSURE)	40 OF 188
S-203A	FRAMING ELEVATION AT COLUMN LINES CC, E, AND G	41 OF 188
S-204	FRAMING ELEVATIONS AT COLUMN LINES 6, 9, AND 11	42 OF 188
S-205	FRAMING ELEVATIONS AT COLUMN LINES 1, 4, 14, 7.4, AND 7.8	43 OF 188
S-206	FRAMING ELEVATIONS AT COLUMN LINES 7 AND 8 (NO STORAGE ENCLOSURE)	44 OF 188
S-206A	FRAMING ELEVATIONS AT COLUMN LINES 7 AND 8	45 OF 188
S-211	INTERIOR FRAMING ELEVATION AT COLUMN LINE A	46 OF 188
S-212	INTERIOR FRAMING ELEVATION AT COLUMN LINE D	47 OF 188
S-213	INTERIOR FRAMING ELEVATIONS AT COLUMN LINES 6 & 9	48 OF 188
S-214	INTERIOR FRAMING ELEVATIONS AT COLUMN LINES 4 & 11	49 OF 188
S-401	FRAMING PART PLANS	50 OF 188
S-402	RAILCAR ENCLOSURE AND CRANE ACCESS STAIR PART PLANS	51 OF 188
S-403	ENTRYWAY STAIR TOWER PART PLANS	52 OF 188
S-404	PARTIAL ELEVATIONS AT TOOL RACK AND HANDRAILS	53 OF 188
S-405	ENLARGED FRAMING ELEVATIONS	54 OF 188
S-406	FRAMING PLAN LEVEL 1 (NO STORAGE ENCLOSURE)	55 OF 188
S-407	FRAMING PLAN LEVEL 1 CEILING	56 OF 188
S-408	FRAMING PLAN LEVEL 2 - CEILING	57 OF 188
S-409	FRAMING PLAN LEVEL 3 - CEILING	58 OF 188
S-410	PART PLAN AT DUCT SUPPORTS	59 OF 188
S-411	PARTIAL PLANS DECK INSERT PLUG	60 OF 188
S-501	TYPICAL CONNECTION DETAILS	61 OF 188
S-502	TYPICAL BRACING CONNECTION DETAILS	62 OF 188
S-503	CRANE RAIL AND WHEEL STOP DETAILS	63 OF 188
S-504	MOVABLE ROOF DETAILS	64 OF 188
S-505	MOVABLE ROOF DETAILS	65 OF 188
S-506	GIRT CONNECTION DETAILS	66 OF 188
S-507	PLATFORMS AND WALL PENETRATION DETAILS	67 OF 188
S-508	LADDER DETAILS	68 OF 188
S-509	WALL PANEL ATTACHMENT AND FRAMING DETAILS	69 OF 188
S-510	PASSAGEWAY SUPPORT SECTIONS	70 OF 188
S-511	EXTERIOR STAIR SECTIONS	71 OF 188
S-512	STRUCTURAL FRAMING DETAILS	72 OF 188
S-513	DECK INSERT DETAILS	73 OF 188
S-514	DECK INSERT DETAILS	74 OF 188
S-515	DECK INSERT DETAILS	75 OF 188
S-516	DECK INSERT DETAILS	76 OF 188
S-517	STAIR SECTIONS AND DETAILS	77 OF 188
S-518	STAIR TOWER SECTIONS	78 OF 188
S-519	PANEL ATTACHMENTS	79 OF 188
S-520	DECK INSERT AND MISCELLANEOUS DETAILS	80 OF 188
S-521	LITE GAGE FRAMING SECTIONS	81 OF 188
S-522	SECTIONS AT CRANE LEVEL	82 OF 188
S-523	MOVABLE ROOF SECTIONS	83 OF 188
S-524	DECK INSERT PLUG DETAILS	84 OF 188

DRAWING INDEX

DRAWING	TITLE	SHEET NUMBER
S-600	COLUMN SCHEDULE	85 OF 188
S-601	COLUMN SCHEDULE	86 OF 188
A-001	ARCHITECTURAL LEGEND, ABBREVIATIONS AND GENERAL NOTES	87 OF 188
A-100	GROUND LEVEL PLAN (NO STORAGE ENCLOSURE)	88 OF 188
A-100A	GROUND LEVEL PLAN	89 OF 188
A-101	LEVEL 1 PLAN (NO STORAGE ENCLOSURE)	90 OF 188
A-101A	LEVEL 1 PLAN	91 OF 188
A-102	LEVEL 2 PLAN	92 OF 188
A-103	LEVEL 3 PLAN	93 OF 188
A-104	LEVEL 4 PLAN	94 OF 188
A-105	CRANE LEVEL	95 OF 188
A-106	ROOF PLAN	96 OF 188
A-107	GROUND LEVEL REFLECTED CEILING PLAN	97 OF 188
A-108	REFLECTED CEILING PLANS	98 OF 188
A-201	EXTERIOR ELEVATIONS (NO STORAGE ENCLOSURE)	99 OF 188
A-201A	EXTERIOR ELEVATIONS	100 OF 188
A-202	EXTERIOR ELEVATIONS (NO STORAGE ENCLOSURE)	101 OF 188
A-202A	EXTERIOR ELEVATIONS	102 OF 188
A-203	EXTERIOR ELEVATIONS	103 OF 188
A-301	SECTIONS (NO STORAGE ENCLOSURE)	104 OF 188
A-301A	SECTIONS	105 OF 188
A-302A	BUILDING SECTION	106 OF 188
A-303	WALL SECTIONS	107 OF 188
A-304	WALL SECTIONS	108 OF 188
A-305	ARCHITECTURAL DETAILS	109 OF 188
A-401	MOVABLE FLOOR ENLARGED PLAN	110 OF 188
A-402	HINGED WALL PANEL ELEVATION AND DETAILS	111 OF 188
A-403	PARTIAL PLAN AND ELEVATION AT TURNSTILE	112 OF 188
A-404	INTERIOR STAIRWELL SECTIONS AND DETAILS	113 OF 188
A-405	PART PLANS - INTERIOR STAIRS	114 OF 188
A-406	DEMIN WIRE MESH PARTITION PLAN AND ELEVATION	115 OF 188
A-501	ARCHITECTURAL DETAILS	116 OF 188
A-502	ARCHITECTURAL DETAILS	117 OF 188
A-503	ROOF DETAILS	118 OF 188
A-504	ARCHITECTURAL DETAILS	119 OF 188
A-505	ARCHITECTURAL DETAILS	120 OF 188
A-506	PENETRATION DETAILS	121 OF 188
A-507	ARCHITECTURAL COORDINATION DETAILS	122 OF 188
A-601	ROOM FINISH AND DOOR SCHEDULES	123 OF 188
A-602	DOOR DETAILS	124 OF 188
A-603	DOOR DETAILS	125 OF 188
A-604	HATCH DETAILS	126 OF 188
A-605	DOOR DETAILS	127 OF 188
A-901	ENCLOSURE SECTION PERSPECTIVE	128 OF 188
FA-001	FIRE ALARM LEGEND, ABBREVIATIONS AND GENERAL NOTES	129 OF 188
FA-100	GROUND LEVEL FIRE ALARM PLAN (NO STORAGE ENCLOSURE)	130 OF 188
FA-100A	GROUND LEVEL FIRE ALARM PLAN	131 OF 188
FA-101	LEVEL 1 FIRE ALARM PLAN (NO STORAGE ENCLOSURE)	132 OF 188
FA-101A	LEVEL 1 FIRE ALARM PLAN	133 OF 188
FA-102	LEVEL 2 FIRE ALARM PLAN (NO STORAGE ENCLOSURE)	134 OF 188
FA-102A	LEVEL 2 FIRE ALARM PLAN	135 OF 188
FA-103	LEVEL 3 FIRE ALARM PLAN	136 OF 188
FA-104	LEVEL 4 FIRE ALARM PLAN	137 OF 188
FA-105	CRANE LEVEL FIRE ALARM PLAN	138 OF 188
FP-100	FIRE PROTECTION PLANS	139 OF 188
M-001	MECHANICAL LEGEND, ABBREVIATIONS AND GENERAL NOTES	140 OF 188
M-100	GROUND LEVEL MECHANICAL PLAN (NO STORAGE ENCLOSURE)	141 OF 188
M-100A	GROUND LEVEL MECHANICAL PLAN	142 OF 188
M-101	LEVEL 1 MECHANICAL PLAN (NO STORAGE ENCLOSURE)	143 OF 188
M-101A	LEVEL 1 MECHANICAL PLAN	144 OF 188
M-102	LEVEL 2 MECHANICAL PLAN (NO STORAGE ENCLOSURE)	145 OF 188
M-102A	LEVEL 2 MECHANICAL PLAN	146 OF 188
M-103	LEVEL 3 MECHANICAL PLAN	147 OF 188
M-104	BOTTOM OF ROOF MECHANICAL PLAN	148 OF 188
M-201	MECHANICAL ELEVATION	149 OF 188
M-501	MECHANICAL DETAILS	150 OF 188
M-502	MECHANICAL DETAILS	151 OF 188
M-503	MECHANICAL DETAILS	152 OF 188
M-504	AIRFLOW SCHEMATIC	153 OF 188
M-505	VENTILATION SKID	154 OF 188
M-601	MECHANICAL SCHEDULES	155 OF 188
E-001	ELECTRICAL LEGEND, ABBREVIATIONS AND GENERAL NOTES	156 OF 188
EP-100	GROUND LEVEL POWER AND SYSTEMS PLAN (NO STORAGE ENCLOSURE)	157 OF 188
EP-100A	GROUND LEVEL POWER AND SYSTEMS PLAN	158 OF 188
EP-101	LEVEL 1 POWER AND SYSTEMS PLAN (NO STORAGE ENCLOSURE)	159 OF 188
EP-101A	LEVEL 1 POWER AND SYSTEMS PLAN	160 OF 188
EP-102	LEVEL 2 POWER AND SYSTEMS PLAN	161 OF 188
EP-103	LEVEL 3 POWER AND SYSTEMS PLAN	162 OF 188
EP-104	CRANE LEVEL POWER AND SYSTEMS PLAN	163 OF 188
EL-100	GROUND LEVEL LIGHTING PLAN (NO STORAGE ENCLOSURE)	164 OF 188
EL-100A	GROUND LEVEL LIGHTING PLAN	165 OF 188
EL-101	LEVEL 1 LIGHTING PLAN (NO STORAGE ENCLOSURE)	166 OF 188
EL-101A	LEVEL 1 LIGHTING PLAN	167 OF 188

DRAWING INDEX

DRAWING	TITLE	SHEET NUMBER
EL-102	LEVEL 2 LIGHTING PLAN	168 OF 188
EL-103	LEVEL 3 LIGHTING PLAN	169 OF 188
EL-104	LEVEL 4 LIGHTING PLAN	170 OF 188
EL-105	CRANE LEVEL LIGHTING PLAN	171 OF 188
E-501	ONE-LINE DIAGRAM - NON-CRITIAL LOADS	172 OF 188
E-502	ONE-LINE DIAGRAM - CRITICAL LOADS	173 OF 188
E-503	ELECTRICAL PHONE SYSTEM SCHEMATIC	174 OF 188
E-504	ELECTRICAL SCHEMATICS	175 OF 188
E-505	ELECTRICAL DETAILS	176 OF 188
E-601	ELECTRICAL SCHEDULES	177 OF 188
E-602	ELECTRICAL SCHEDULES	178 OF 188
IC-101	LOCAL CONTROL SYSTEM NETWORK AND POINTS LIST	179 OF 188
IC-200	LOCAL CONTROL PANEL EXTERIOR	180 OF 188
IC-201	ROOF CONTROL PANEL EXTERIOR	181 OF 188
IC-202	CONTROL PANEL SCREEN LAYOUTS	182 OF 188
IC-203	CONTROL PANEL TROUBLE SHOOTING SCREEN LAYOUTS	183 OF 188
Q-101	CRANE SUMMARY - LEVEL 1	184 OF 188
Q-102	CRANE SUMMARY - LEVEL 2	185 OF 188
Q-103	CRANE SUMMARY - LEVEL 3	186 OF 188
Q-104	CRANE SUMMARY - CRANE LEVEL	187 OF 188
Q-301	BUILDING SECTION WITH BRIDGE CRANE	188 OF 188

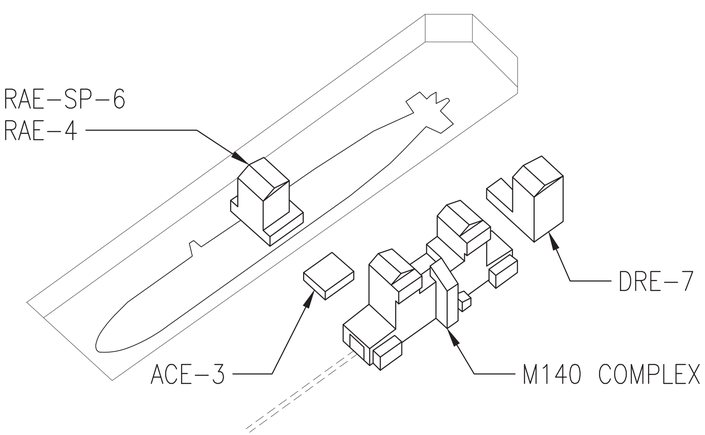

PLAN NORTH

DD#1 SITE ISO DIAGRAM
SCALE: NTS

SYM	DESCRIPTION	DATE	APPR
0	ISSUED FOR CONSTRUCTION	10/28/2016	CBC

NAVFAC

STATE OF MAINE
CALEN B. COLBY
No. 6384
PROFESSIONAL ENGINEER
LICENSED
10/28/16

Colby Company engineering
A/E INFO

APPROVED
David W. Thurnfield
FOR COMMANDER NAVFAC

ACTIVITY
TIM FISHER
C. 2370.6 BRANCH HEAD

SATISFACTORY TO DATE 10/28/2016
DES BCT DRW BVD CHK CBC
PMDM PETER STOCKLESS
BRANCH MANAGER IAN BODWELL
FEAD/PMAE AMIN BAHROUR
FIRE PROTECTION PATRICK BAKAJ

DEPARTMENT OF THE NAVY
NAVAL FACILITIES ENGINEERING COMMAND
PUBLIC WORKS DEPARTMENT - MAINE
NAVAL FACILITIES ENGINEERING COMMAND ~ MID-ATLANTIC
NAVAL SHIPYARD - PORTSMOUTH, NH
PORTSMOUTH NAVAL SHIPYARD
KITTERY, ME
DRY DOCK #1 DEFUELING COMPLEX
M-140 COMPLEX
TITLE SHEET

EPROJECT NO.: 1363311
CONSTR. CONTR. NO. N40085-17-C-5002
NAVFAC DRAWING NO. 12734784
SHEET 1 OF 188
G-001 DD1-16-865

DRAWFORM REVISION: 10 OCTOBER 2014

10/28/2016 6:31:48 AM X:\297 PORTSMOUTH NAVAL SHIPYARD\297.005.001 - DD#1 DEFUELING COMPLEX DESIGN\DRAWINGS\M140\SHEETS\G-001.DWG

NOTES

1. THE DRAWING HIGHLIGHTS THE BASE BID.
2. THE INTENT OF THE GENERAL ARRANGEMENT DRAWINGS IS TO SHOW GENERAL REQUIREMENTS AND USAGE OF THE ENCLOSURE. THE EQUIPMENT IS SHOWN IN THE DRAWINGS FOR COORDINATION WITH OTHER TRADES AS WELL AS OVERALL CONTRACTOR COORDINATION. THESE LOCATIONS ARE PROVIDED FOR SYSTEM/BUILDING INSTALLATION TO ENSURE NO INTERFERENCES AND CONFLICTS EXIST WITH THE FUTURE SHIPYARD EQUIPMENT.
3. A CLEAR ENVELOPE OF 12' WIDE AND 18' HIGH IS REQUIRED THROUGH THE M-140 GROUND LEVEL FOR THE RAILCARS. ALL BUILDING ELEMENTS AND SYSTEMS SHALL BE COORDINATED TO KEEP THE ENVELOPE CLEAR.

M-140 BASE BID SUMMARY

1. THE BASE BID DOES NOT INCLUDE THE STORAGE ENCLOSURE OF THE M-140 COMPLEX.
   MODIFICATIONS FROM THE STORAGE ENCLOSURE BID OPTION INCLUDE THE FOLLOWING:
   1) NO STORAGE ENCLOSURE (TWO STORIES)
   2) RELOCATION OF PASSAGEWAY CONNECTION TO M-140 LEVEL 1 AND DRE-7
   3) EMERGENCY EXIT RELOCATION
   4) OVERHEAD DOOR RELOCATION
   5) LEVEL 1 INCLUDES FRAMED/CLEAR OPENING FOR FUTURE USE. REFER TO STRUCTURAL FOR ADDITIONAL INFORMATION.
   6) RELOCATION OF FLOOR HATCH AND MONORAIL SYSTEM AT LEVEL 1
   7) RELOCATION OF COMPRESSED AIR CONNECTIONS FOR AIR CASTER SYSTEM
   8) MECHANICAL SYSTEM, ELECTRICAL SYSTEM, AND FIRE ALARM SYSTEM MODIFICATIONS.

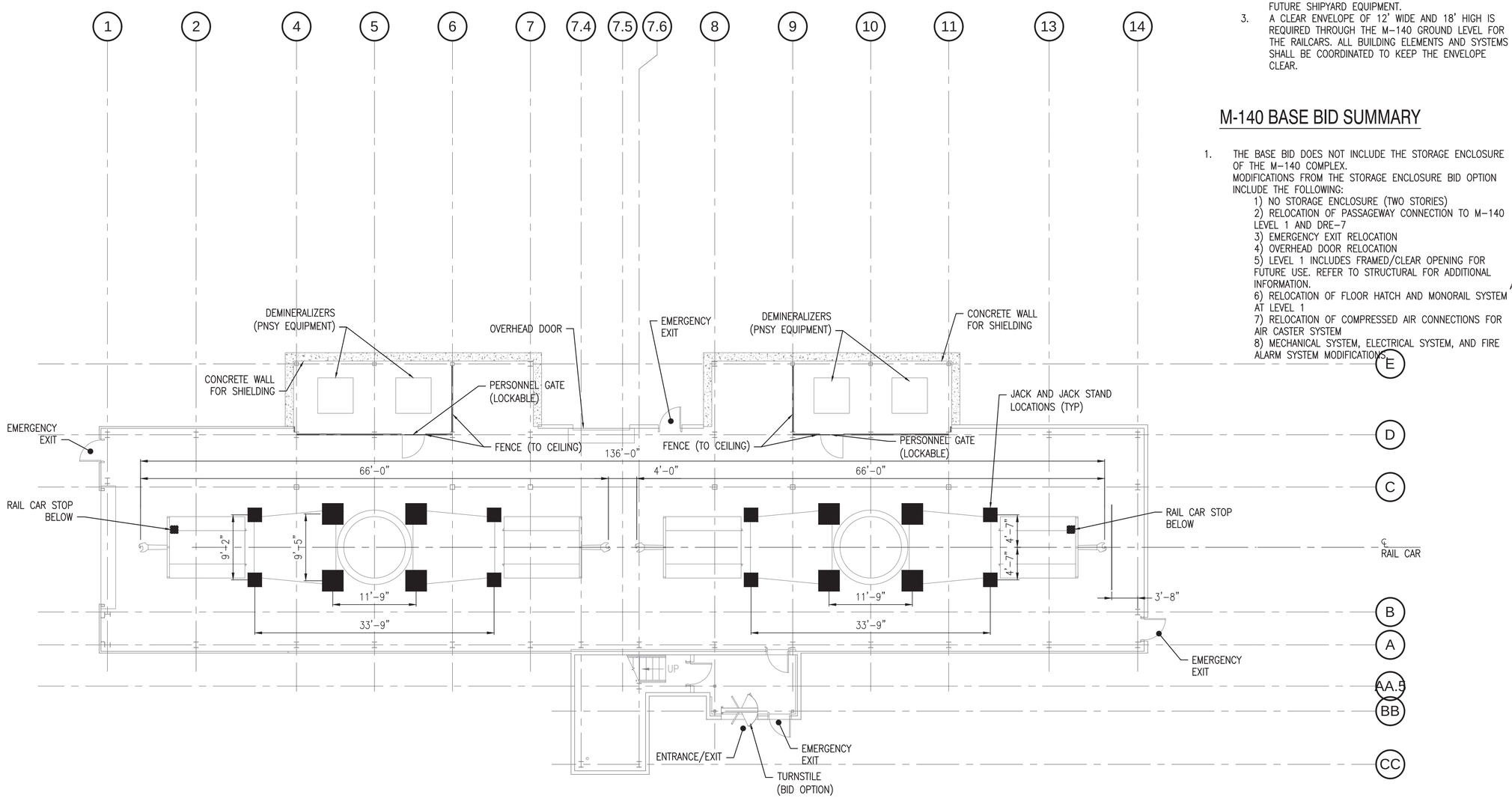

GENERAL ARRANGEMENT GROUND LEVEL PLAN (NO STORAGE ENCLOSURE)

SCALE: 1/8" = 1'-0"

PLAN NORTH

0 4' 8' 16'
Scale: 1/8" = 1'-0"

SYM	DESCRIPTION	DATE	APPR
0	ISSUED FOR CONSTRUCTION	10/28/2016	CBC

NAVFAC

STATE OF MAINE
BENJAMIN C. TOWNSEND
No.13287
LICENSED
PROFESSIONAL ENGINEER
10/28/16
SEAL

Colby Company engineering
A/E INFO

APPROVED
David W. Thurnfield
FOR COMMANDER NAVFAC

ACTIVITY
TIM FISHER
C. 2370.6 BRANCH HEAD

SATISFACTORY TO DATE 10/28/2016

DES BCT | DRW ERB | CHK BCT

PMDM PETER STOCKLESS
BRANCH MANAGER IAN BODWELL
FEAD/PM&E AMIN BAHROUR
FIRE PROTECTION PATRICK BAKAJ

DEPARTMENT OF THE NAVY
NAVAL FACILITIES ENGINEERING COMMAND
PUBLIC WORKS DEPARTMENT - MAINE

NAVAL FACILITIES ENGINEERING COMMAND ~ MID-ATLANTIC
NAVAL SHIPYARD - PORTSMOUTH, NH

PORTSMOUTH NAVAL SHIPYARD
KITTERY, ME

DRY DOCK #1 DEFUELING COMPLEX
M-140 COMPLEX

GENERAL ARRANGEMENT GROUND LEVEL PLAN (NO STORAGE ENCLOSURE)

EPROJECT NO.: 1363311
CONSTR. CONTR. NO.: N40085-17-C-5002
NAVFAC DRAWING NO. 12734785
SHEET 2 OF 188

GA-100 | DD1-16-866

DRAWFORM REVISION: 10 OCTOBER 2014

10/28/2016 6:31:54 AM X:\297 PORTSMOUTH NAVAL SHIPYARD\297.005.001 - DD#1 DEFUELING COMPLEX DESIGN\DRAWINGS\M140\SHEETS\GA-100.DWG

GENERAL ARRANGEMENT - GROUND LEVEL PLAN

SCALE: 1/8" = 1'-0"

PLAN NORTH

NOTES

1. THE INTENT OF THE GENERAL ARRANGEMENT DRAWINGS IS TO SHOW GENERAL REQUIREMENTS AND USAGE OF THE ENCLOSURE. THE EQUIPMENT IS SHOWN IN THE DRAWINGS FOR COORDINATION WITH OTHER TRADES AS WELL AS OVERALL CONTRACTOR COORDINATION. THESE LOCATIONS ARE PROVIDED FOR SYSTEM/BUILDING INSTALLATION TO ENSURE NO INTERFERENCES AND CONFLICTS EXIST WITH THE FUTURE SHIPYARD EQUIPMENT.
2. A CLEAR ENVELOPE OF 12' WIDE AND 18' HIGH IS REQUIRED THROUGH THE M-140 GROUND LEVEL FOR THE RAILCARS. ALL BUILDING ELEMENTS AND SYSTEMS SHALL BE COORDINATED TO KEEP THE ENVELOPE CLEAR.

SYM	DESCRIPTION	DATE	APPR
0	ISSUED FOR CONSTRUCTION	10/28/2016	CBC

NAVFAC

STATE OF MAINE
BENJAMIN C. TOWNSEND
No. 13287
LICENSED
PROFESSIONAL ENGINEER
10/28/16
SEAL

Colby Company engineering
A/E INFO

APPROVED
David W. Thurnfield
FOR COMMANDER NAVFAC

ACTIVITY
TIM FISHER
C. 2370.6 BRANCH HEAD

SATISFACTORY TO DATE 10/28/2016

DES BCT DRW ERB CHK BCT

PMDM	PETER STOCKLESS
BRANCH MANAGER	IAN BODWELL
FEADPM/AE	AMIN BAHROUR
FIRE PROTECTION	PATRICK BAKAJ

DEPARTMENT OF THE NAVY
NAVAL FACILITIES ENGINEERING COMMAND
PUBLIC WORKS DEPARTMENT - MAINE

NAVAL FACILITIES ENGINEERING COMMAND ~ MID-ATLANTIC
NAVAL SHIPYARD - PORTSMOUTH, NH

PORTSMOUTH NAVAL SHIPYARD
DRY DOCK #1 DEFUELING COMPLEX
M-140 COMPLEX

KITTERY, ME

GENERAL ARRANGEMENT - GROUND LEVEL PLAN

EPROJECT NO.: 1363311

CONSTR. CONTR. NO.
N40085-17-C-5002

NAVFAC DRAWING NO.
12734786

SHEET 3 OF 188

GA-100A | DD1-16-867

0 4' 8' 16'
Scale: 1/8" = 1'-0"

DRAWFORM REVISION: 10 OCTOBER 2014

10/28/2016 6:31:59 AM X:\297 PORTSMOUTH NAVAL SHIPYARD\297.005.001 - DD#1 DEFUELING COMPLEX DESIGN\DRAWINGS\M140\SHEETS\GA-100A.DWG

KEYED NOTES

1. DECK INSERT PLUG COVERS OPENING IN DECK INSERT WHEN RAILCAR IS NOT IN PLACE.

NOTES

1. THE DRAWING HIGHLIGHTS THE BASE BID.
2. THE INTENT OF THE GENERAL ARRANGEMENT DRAWINGS IS TO SHOW GENERAL REQUIREMENTS AND USAGE OF THE ENCLOSURE. THE EQUIPMENT IS SHOWN IN THE DRAWINGS FOR COORDINATION WITH OTHER TRADES AS WELL AS OVERALL CONTRACTOR COORDINATION. THESE LOCATIONS ARE PROVIDED FOR SYSTEM/BUILDING INSTALLATION TO ENSURE NO INTERFERENCES AND CONFLICTS EXIST WITH THE FUTURE SHIPYARD EQUIPMENT.

M-140 BASE BID SUMMARY

1. THE BASE BID DOES NOT INCLUDE THE STORAGE ENCLOSURE OF THE M-140 COMPLEX.
   MODIFICATIONS FROM THE STORAGE ENCLOSURE BID OPTION INCLUDE THE FOLLOWING:
   1) NO STORAGE ENCLOSURE (TWO STORIES)
   2) RELOCATION OF PASSAGEWAY CONNECTION TO M-140 LEVEL 1 AND DRE-7
   3) EMERGENCY EXIT RELOCATION
   4) OVERHEAD DOOR RELOCATION
   5) LEVEL 1 INCLUDES FRAMED/CLEAR OPENING FOR FUTURE ACCESS. REFER TO STRUCTURAL FOR ADDITIONAL INFORMATION
   6) RELOCATION OF FLOOR HATCH AND MONORAIL SYSTEM AT LEVEL 1
   7) RELOCATION OF COMPRESSED AIR CONNECTIONS FOR AIR CASTER SYSTEM
   8) MECHANICAL SYSTEM, ELECTRICAL SYSTEM, AND FIRE ALARM SYSTEM MODIFICATIONS.

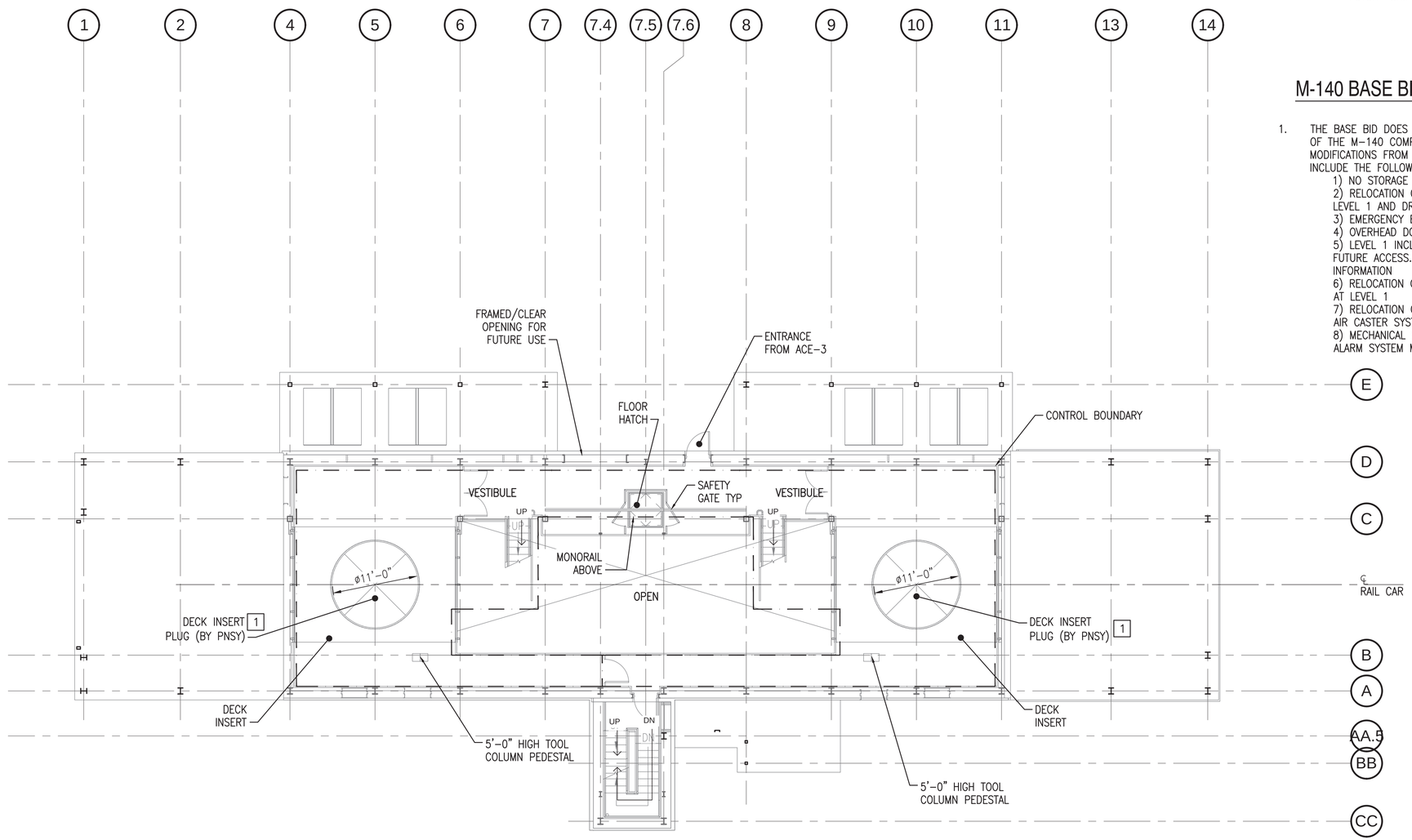

GENERAL ARRANGEMENT LEVEL 1 PLAN (NO STORAGE ENCLOSURE)

SCALE: 1/8" = 1'-0"

PLAN NORTH

0 4' 8' 16'
Scale: 1/8" = 1'-0"

SYM	DESCRIPTION	DATE	APPR
0	ISSUED FOR CONSTRUCTION	10/28/2016	CBC

NAVFAC

STATE OF MAINE
BENJAMIN C. TOWNSEND
No.13287
LICENSED
PROFESSIONAL ENGINEER
10/28/16
SEAL

Colby Company engineering
A/E INFO

APPROVED
David W. Thurnfield
FOR COMMANDER NAVFAC

ACTIVITY
TIM FISHER
C. 2370.6 BRANCH HEAD

SATISFACTORY TO DATE 10/28/2016
DES BCT DRW ERB CHK BCT
PMDM PETER STOCKLESS
BRANCH MANAGER IAN BODWELL
FEA/DPM&E AMIN BAHROUR
FIRE PROTECTION PATRICK BAKAJ

DEPARTMENT OF THE NAVY
NAVAL FACILITIES ENGINEERING COMMAND
PUBLIC WORKS DEPARTMENT - MAINE
NAVAL FACILITIES ENGINEERING COMMAND ~ MID-ATLANTIC
NAVAL SHIPYARD - PORTSMOUTH, NH
PORTSMOUTH NAVAL SHIPYARD
KITTERY, ME
DRY DOCK #1 DEFUELING COMPLEX
M-140 COMPLEX
GENERAL ARRANGEMENT LEVEL 1 PLAN (NO STORAGE ENCLOSURE)

EPROJECT NO.: 1363311
CONSTR. CONTR. NO. N40085-17-C-5002
NAVFAC DRAWING NO. 12734787
SHEET 4 OF 188
GA-101 DD1-16-868

DRAWFORM REVISION: 10 OCTOBER 2014

10/28/2016 6:32:03 AM X:\297 PORTSMOUTH NAVAL SHIPYARD\297.005.001 - DD#1 DEFUELING COMPLEX DESIGN\DRAWINGS\M140\SHEETS\GA-101.DWG

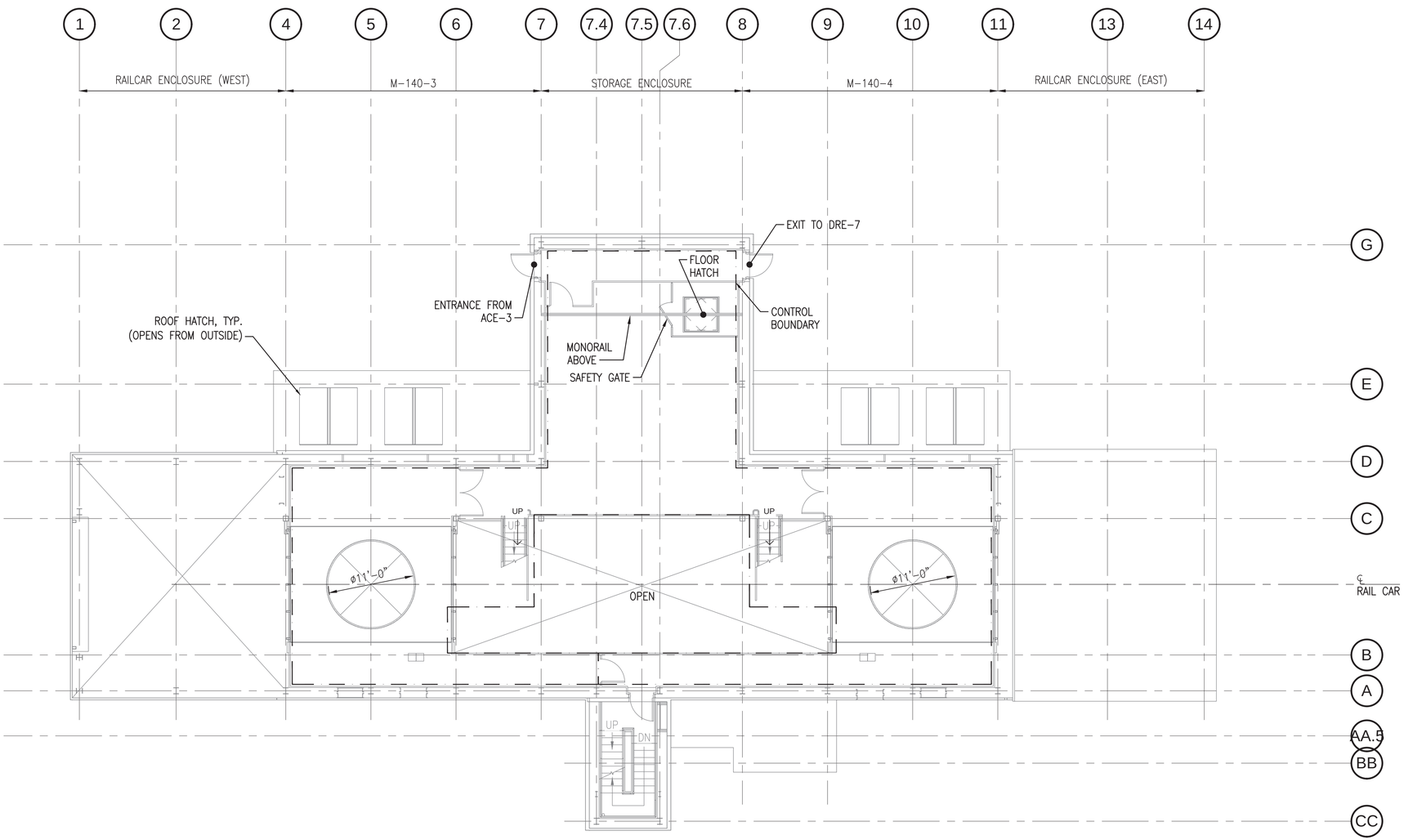

GENERAL ARRANGEMENT - LEVEL 1 PLAN

SCALE: 1/8" = 1'-0"

PLAN NORTH

NOTES

1. THE INTENT OF THE GENERAL ARRANGEMENT DRAWINGS IS TO SHOW GENERAL REQUIREMENTS AND USAGE OF THE ENCLOSURE. THE EQUIPMENT IS SHOWN IN THE DRAWINGS FOR COORDINATION WITH OTHER TRADES AS WELL AS OVERALL CONTRACTOR COORDINATION. THESE LOCATIONS ARE PROVIDED FOR SYSTEM/BUILDING INSTALLATION TO ENSURE NO INTERFERENCES AND CONFLICTS EXIST WITH THE FUTURE SHIPYARD EQUIPMENT.
2. AREAS WITHIN CONTROL BOUNDARIES WILL BE USED FOR RADIOLOGICAL PURPOSES AND SHALL BE CONSTRUCTED SO AS TO MINIMIZE CRACKS AND CREVICES. IN ADDITION, THESE AREAS SHALL BE CONSTRUCTED WITH CLEANLINESS AND CAPTIVATION IN MIND, WITH SELF-LOCKING FASTENERS USED AS MUCH AS PRACTICAL. THE CONTROL BOUNDARY SHALL BE AIR TIGHT TO MAINTAIN NEGATIVE DP WITHIN THE AREA.

SYM	DESCRIPTION	DATE	APPR
0	ISSUED FOR CONSTRUCTION	10/28/2016	CBC

NAVFAC

STATE OF MAINE
BENJAMIN C. TOWNSEND
No. 13287
LICENSED PROFESSIONAL ENGINEER
10/28/16
SEAL

Colby Company engineering
A/E INFO

APPROVED
David W. Trumfield
FOR COMMANDER NAVFAC

ACTIVITY
TIM FISHER
C. 2370.6 BRANCH HEAD

SATISFACTORY TO DATE 10/28/2016
DES BCT DRW ERB CHK BCT
PMDM PETER STOCKLESS
BRANCH MANAGER IAN BODWELL
FEA/DPM&E AMIN BAHROUR
FIRE PROTECTION PATRICK BAKAJ

DEPARTMENT OF THE NAVY
NAVAL FACILITIES ENGINEERING COMMAND
PUBLIC WORKS DEPARTMENT, MAINE
NAVAL FACILITIES ENGINEERING COMMAND ~ MID-ATLANTIC
NAVAL SHIPYARD, PORTSMOUTH, NH
PORTSMOUTH NAVAL SHIPYARD
KITTERY, ME
DRY DOCK #1 DEFUELING COMPLEX
M-140 COMPLEX
GENERAL ARRANGEMENT – LEVEL 1 PLAN

EPROJECT NO.: 1363311
CONSTR. CONTR. NO. N40085-17-C-5002
NAVFAC DRAWING NO. 12734788
SHEET 5 OF 188
GA-101A | DD1-16-869

0 4' 8' 16'
Scale: 1/8" = 1'-0"

DRAWFORM REVISION: 10 OCTOBER 2014

10/28/2016 6:32:07 AM X:\297 PORTSMOUTH NAVAL SHIPYARD\297.005.001 - DD#1 DEFUELING COMPLEX DESIGN\DRAWING\SM140\SHEETS\GA-101A.DWG

NOTES

1. THE INTENT OF THE GENERAL ARRANGEMENT DRAWINGS IS TO SHOW GENERAL REQUIREMENTS AND USAGE OF THE ENCLOSURE. THE EQUIPMENT IS SHOWN IN THE DRAWINGS FOR COORDINATION WITH OTHER TRADES AS WELL AS OVERALL CONTRACTOR COORDINATION. THESE LOCATIONS ARE PROVIDED FOR SYSTEM/BUILDING INSTALLATION TO ENSURE NO INTERFERENCES AND CONFLICTS EXIST WITH THE FUTURE SHIPYARD EQUIPMENT.
2. AREAS WITHIN CONTROL BOUNDARIES WILL BE USED FOR RADIOLOGICAL PURPOSES AND SHALL BE CONSTRUCTED SO AS TO MINIMIZE CRACKS AND CREVICES. IN ADDITION, THESE AREAS SHALL BE CONSTRUCTED WITH CLEANLINESS AND CAPTIVATION IN MIND, WITH SELF-LOCKING FASTENERS USED AS MUCH AS PRACTICAL. THE CONTROL BOUNDARY SHALL BE AIR TIGHT TO MAINTAIN NEGATIVE DP WITHIN THE AREA.

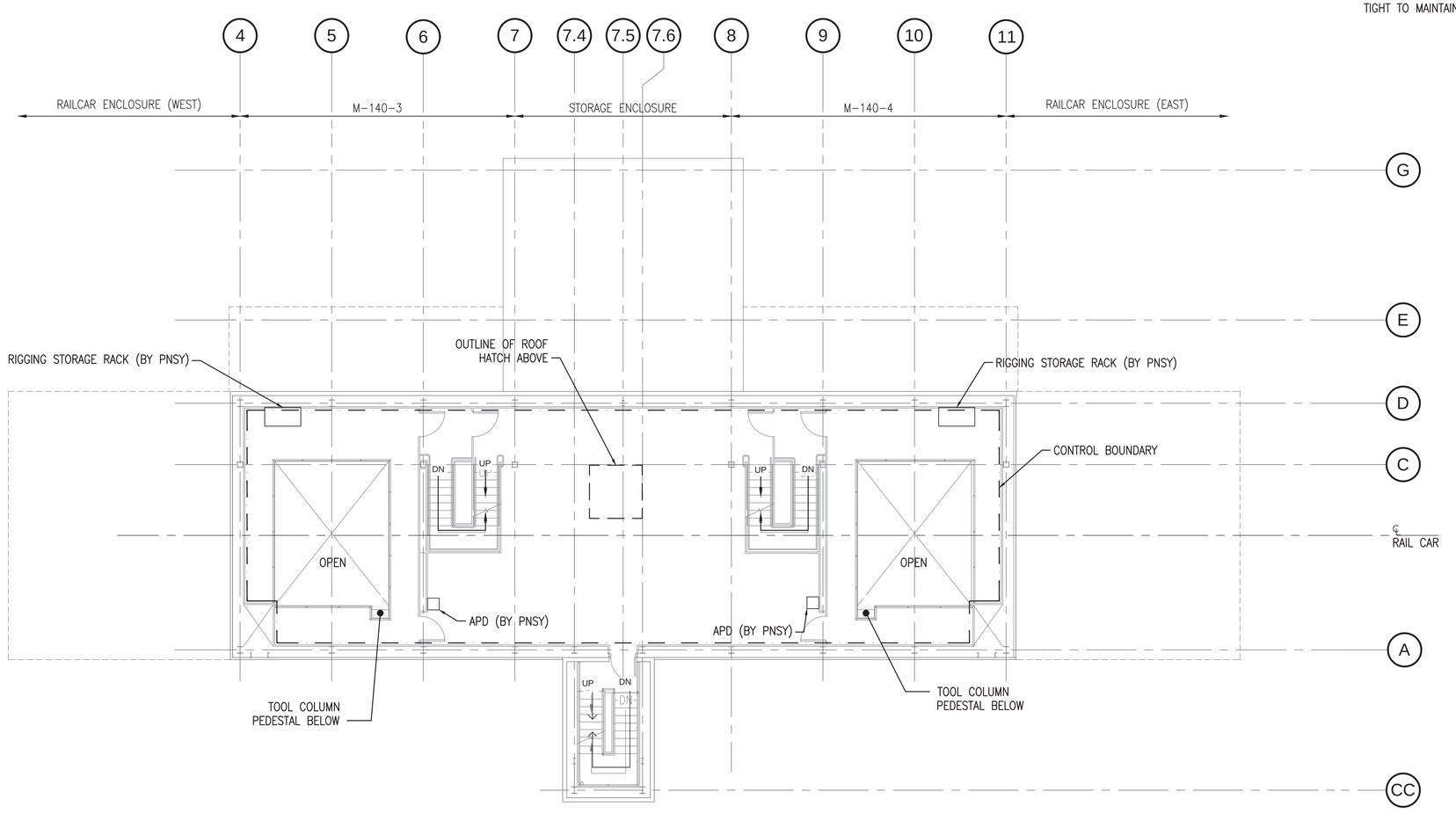

PLAN NORTH

GENERAL ARRANGEMENT - LEVEL 2 PLAN

SCALE: 1/8" = 1'-0"

0 4' 8' 16'
Scale: 1/8" = 1'-0"

SYM	DESCRIPTION	DATE	APPR
0	ISSUED FOR CONSTRUCTION	10/28/2016	CBC

NAVFAC

STATE OF MAINE
BENJAMIN C. TOWNSEND
No.13287
LICENSED
PROFESSIONAL ENGINEER
10/28/16
SEAL

Colby Company engineering
A/E INFO

APPROVED BY: David W. Thumfuld
FOR COMMANDER NAVFAC

ACTIVITY
TIM FISHER
C. 2370.6 BRANCH HEAD

SATISFACTORY TO DATE 10/28/2016

DES	BCT	DRW	ERB	CHK	BCT

PM/DM	PETER STOCKLESS
BRANCH MANAGER	IAN BODWELL
FEAD/PM&E	AMIN BAHROUR
FIRE PROTECTION	PATRICK BAKAJ

DEPARTMENT OF THE NAVY
NAVAL FACILITIES ENGINEERING COMMAND
PUBLIC WORKS DEPARTMENT - MAINE

NAVAL FACILITIES ENGINEERING COMMAND ~ MID-ATLANTIC
NAVAL SHIPYARD - PORTSMOUTH, NH

PORTSMOUTH NAVAL SHIPYARD
KITTERY, ME

DRY DOCK #1 DEFUELING COMPLEX
M-140 COMPLEX

GENERAL ARRANGEMENT - LEVEL 2 PLAN

EPROJECT NO.: 1363311

CONSTR. CONTR. NO.
N40085-17-C-5002

NAVFAC DRAWING NO.
12734789

SHEET 6 OF 188

GA-102 | DD1-16-870

DRAWFORM REVISION: 10 OCTOBER 2014

10/28/2016 6:32:11 AM X:\297 PORTSMOUTH NAVAL SHIPYARD\297.005.001 - DD#1 DEFUELING COMPLEX DESIGN\DRAWINGS\M140\SHEETS\GA-102.DWG

NOTES

1. THE INTENT OF THE GENERAL ARRANGEMENT DRAWINGS IS TO SHOW GENERAL REQUIREMENTS AND USAGE OF THE ENCLOSURE. THE EQUIPMENT IS SHOWN IN THE DRAWINGS FOR COORDINATION WITH OTHER TRADES AS WELL AS OVERALL CONTRACTOR COORDINATION. THESE LOCATIONS ARE PROVIDED FOR SYSTEM/BUILDING INSTALLATION TO ENSURE NO INTERFERENCES AND CONFLICTS EXIST WITH THE FUTURE SHIPYARD EQUIPMENT.
2. AREAS WITHIN CONTROL BOUNDARIES WILL BE USED FOR RADIOLOGICAL PURPOSES AND SHALL BE CONSTRUCTED SO AS TO MINIMIZE CRACKS AND CREVICES. IN ADDITION, THESE AREAS SHALL BE CONSTRUCTED WITH CLEANLINESS AND CAPTIVATION IN MIND, WITH SELF-LOCKING FASTENERS USED AS MUCH AS PRACTICAL. THE CONTROL BOUNDARY SHALL BE AIR TIGHT TO MAINTAIN NEGATIVE DP WITHIN THE AREA.

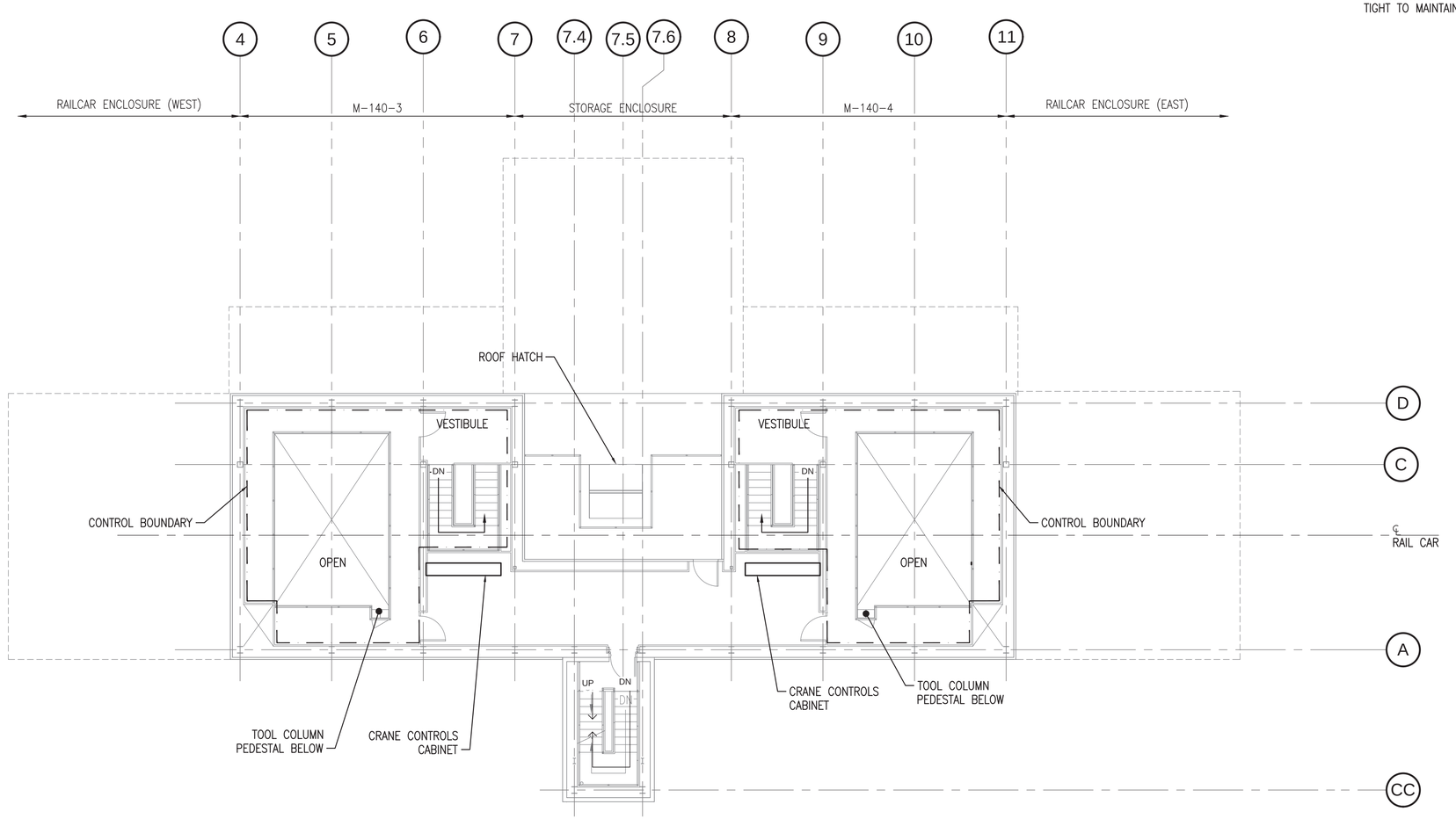

PLAN NORTH

GENERAL ARRANGEMENT - LEVEL 3 PLAN

SCALE: 1/8" = 1'-0"

0 4' 8' 16'
Scale: 1/8" = 1'-0"

SYM	DESCRIPTION	DATE	APPR
0	ISSUED FOR CONSTRUCTION	10/28/2016	CBC

NAVFAC

STATE OF MAINE
BENJAMIN C. TOWNSEND
No.13287
LICENSED
PROFESSIONAL ENGINEER
10/28/16
SEAL

Colby Company engineering
A/E INFO

APPROVED: David W. Thurnfield
FOR COMMANDER NAVFAC

ACTIVITY: TIM FISHER
C. 2370.6 BRANCH HEAD

SATISFACTORY TO DATE 10/28/2016
DES BCT DRW ERB CHK BCT
PMCM PETER STOCKLESS
BRANCH MANAGER IAN BODWELL
FEAD/PM/E AMIN BAHROUR
FIRE PROTECTION PATRICK BAKAJ

DEPARTMENT OF THE NAVY
NAVAL FACILITIES ENGINEERING COMMAND
PUBLIC WORKS DEPARTMENT - MAINE

NAVAL FACILITIES ENGINEERING COMMAND ~ MID-ATLANTIC
NAVAL SHIPYARD - PORTSMOUTH, NH

PORTSMOUTH NAVAL SHIPYARD
KITTERY, ME
DRY DOCK #1 DEFUELING COMPLEX
M-140 COMPLEX

GENERAL ARRANGEMENT – LEVEL 3 PLAN

EPROJECT NO.: 1363311
CONSTR. CONTR. NO. N40085-17-C-5002
NAVFAC DRAWING NO. 12734790
SHEET 7 OF 188
GA-103 DD1-16-871

DRAWFORM REVISION: 10 OCTOBER 2014

10/28/2016 6:32:15 AM X:\297 PORTSMOUTH NAVAL SHIPYARD\297.005.001 - DD#1 DEFUELING COMPLEX DESIGN\DRAWINGS\M140\SHEETS\GA-103.DWG

NOTES

1. THE INTENT OF THE GENERAL ARRANGEMENT DRAWINGS IS TO SHOW GENERAL REQUIREMENTS AND USAGE OF THE ENCLOSURE. THE EQUIPMENT IS SHOWN IN THE DRAWINGS FOR COORDINATION WITH OTHER TRADES AS WELL AS OVERALL CONTRACTOR COORDINATION. THESE LOCATIONS ARE PROVIDED FOR SYSTEM/BUILDING INSTALLATION TO ENSURE NO INTERFERENCES AND CONFLICTS EXIST WITH THE FUTURE SHIPYARD EQUIPMENT.
2. AREAS WITHIN CONTROL BOUNDARIES WILL BE USED FOR RADIOLOGICAL PURPOSES AND SHALL BE CONSTRUCTED SO AS TO MINIMIZE CRACKS AND CREVICES. IN ADDITION, THESE AREAS SHALL BE CONSTRUCTED WITH CLEANLINESS AND CAPTIVATION IN MIND, WITH SELF-LOCKING FASTENERS USED AS MUCH AS PRACTICAL. THE CONTROL BOUNDARY SHALL BE AIR TIGHT TO MAINTAIN NEGATIVE DP WITHIN THE AREA.
3. REFER TO THE Q DRAWINGS FOR CRANE INFORMATION.

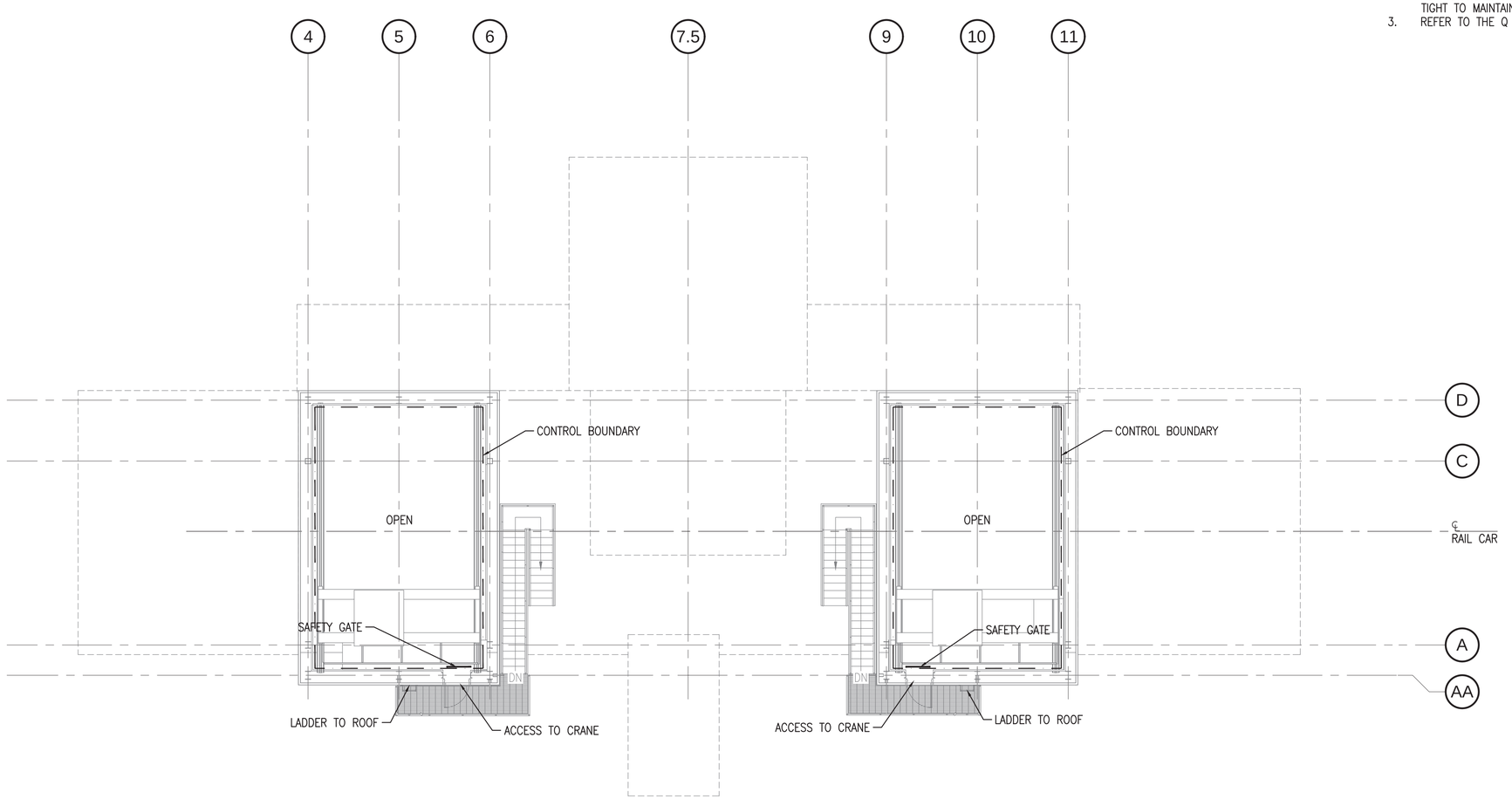

GENERAL ARRANGEMENT - CRANE LEVEL PLAN

SCALE: 1/8" = 1'-0"

PLAN NORTH

0 4' 8' 16'
Scale: 1/8" = 1'-0"

SYM	DESCRIPTION	DATE	APPR
0	ISSUED FOR CONSTRUCTION	10/28/2016	CBC

NAVFAC

STATE OF MAINE
BENJAMIN C. TOWNSEND
No. 13287
LICENSED PROFESSIONAL ENGINEER
10/28/16
SEAL

Colby Company engineering
A/E INFO

APPROVED: David W. Thurnfield
FOR COMMANDER NAVFAC

ACTIVITY: TIM FISHER
C. 2370.6 BRANCH HEAD

SATISFACTORY TO DATE 10/28/2016

DES BCT | DRW ERB | CHK BCT

PM/CM	PETER STOCKLESS
BRANCH MANAGER	IAN BODWELL
FEAD/PM/E	AMIN BAHROUR
FIRE PROTECTION	PATRICK BAKAJ

DEPARTMENT OF THE NAVY
NAVAL FACILITIES ENGINEERING COMMAND
PUBLIC WORKS DEPARTMENT - MAINE

NAVAL FACILITIES ENGINEERING COMMAND ~ MID-ATLANTIC
NAVAL SHIPYARD - PORTSMOUTH, NH

PORTSMOUTH NAVAL SHIPYARD
KITTERY, ME

DRY DOCK #1 DEFUELING COMPLEX
M-140 COMPLEX

GENERAL ARRANGEMENT - CRANE LEVEL PLAN

EPROJECT NO.: 1363311

CONSTR. CONTR. NO. N40085-17-C-5002

NAVFAC DRAWING NO. 12734791

SHEET 8 OF 188

GA-104 | DD1-16-872

DRAWFORM REVISION: 10 OCTOBER 2014

10/28/2016 6:32:19 AM X:\297 PORTSMOUTH NAVAL SHIPYARD\297.005.001 - DD#1 DEFUELING COMPLEX DESIGN\DRAWINGS\M140\SHEETS\GA-104.DWG

NOTES

1. THE INTENT OF THE GENERAL ARRANGEMENT DRAWINGS IS TO SHOW GENERAL REQUIREMENTS AND USAGE OF THE ENCLOSURE. THE EQUIPMENT IS SHOWN IN THE DRAWINGS FOR COORDINATION WITH OTHER TRADES AS WELL AS OVERALL CONTRACTOR COORDINATION. THESE LOCATIONS ARE PROVIDED FOR SYSTEM/BUILDING INSTALLATION TO ENSURE NO INTERFERENCES AND CONFLICTS EXIST WITH THE FUTURE SHIPYARD EQUIPMENT.
2. REFER TO THE ARCHITECTURAL AND STRUCTURAL DRAWINGS FOR ADDITIONAL DETAILS ON CLEARANCES BETWEEN THE ENCLOSURE STRUCTURE AND THE RAILCARS AS SHOWN ON A2/GA-301.

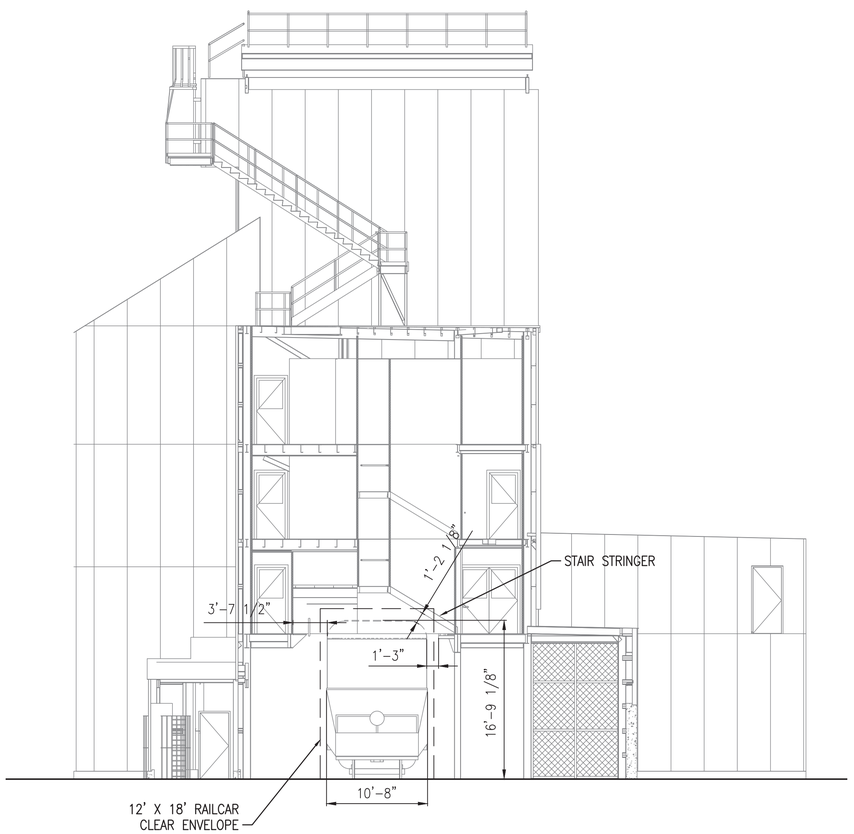

WEST BUILDING SECTION

SCALE: 1/8"=1'-0" GA-100A A2

0 4' 8' 16'
Scale: 1/8" = 1'-0"

SYM	DESCRIPTION	DATE	APPR
0	ISSUED FOR CONSTRUCTION	10/28/2016	CBC

NAVFAC

STATE OF MAINE
BENJAMIN C. TOWNSEND
No. 13287
LICENSED
PROFESSIONAL ENGINEER
10/28/16
SEAL

Colby Company engineering
A/E INFO

APPROVED
David W. Thurnfield
FOR COMMANDER NAVFAC

ACTIVITY
TIM FISHER
C. 2370.6 BRANCH HEAD

SATISFACTORY TO DATE 10/28/2016
DES BCT DRW ERB CHK BCT
PMDM PETER STOCKLESS
BRANCH MANAGER IAN BODWELL
FEAD/PM&E AMIN BAHROUR
FIRE PROTECTION PATRICK BAKAJ

DEPARTMENT OF THE NAVY
NAVAL FACILITIES ENGINEERING COMMAND
PUBLIC WORKS DEPARTMENT - MAINE

NAVAL FACILITIES ENGINEERING COMMAND ~ MID-ATLANTIC
NAVAL SHIPYARD - PORTSMOUTH, NH

PORTSMOUTH NAVAL SHIPYARD
KITTERY, ME

DRY DOCK #1 DEFUELING COMPLEX
M-140 COMPLEX

BUILDING SECTION

EPROJECT NO.: 1363311
CONSTR. CONTR. NO. N40085-17-C-5002
NAVFAC DRAWING NO. 12734792
SHEET 9 OF 188
GA-301 | DD1-16-873

DRAWFORM REVISION: 10 OCTOBER 2014

10/28/2016 6:32:26 AM X:\297 PORTSMOUTH NAVAL SHIPYARD\297.005.001 - DD#1 DEFUELING COMPLEX DESIGN\DRAWINGS\M140\SHEETS\GA-301.DWG

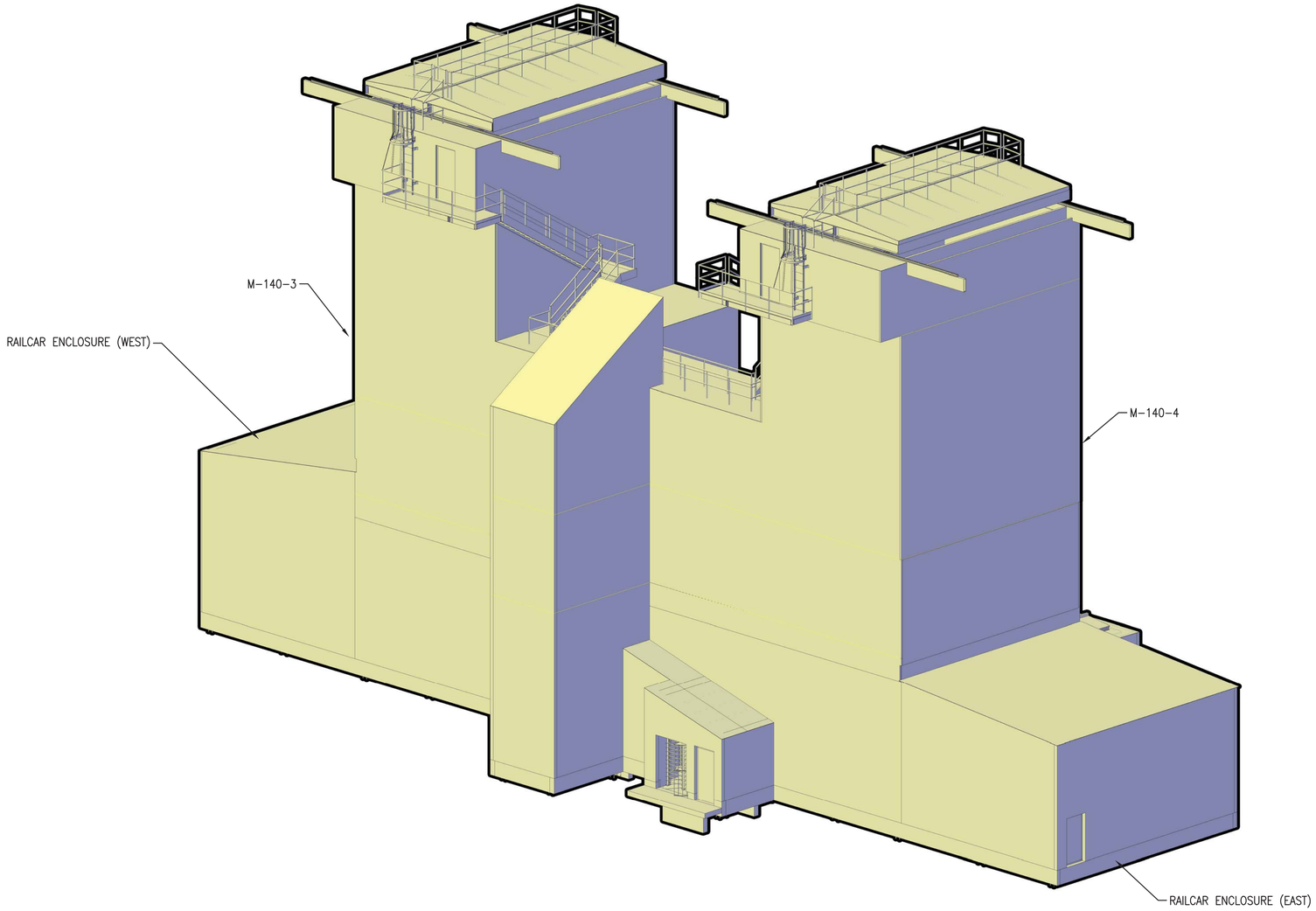

GENERAL ARRANGEMENT RENDERING (NO STORAGE ENCLOSURE) A1

SCALE: NTS

SYM	DESCRIPTION	DATE	APPR
0	ISSUED FOR CONSTRUCTION	10/28/2016	CBC

NAVFAC

STATE OF MAINE
BENJAMIN C. TOWNSEND
No.13287
LICENSED
PROFESSIONAL ENGINEER
10/28/16
SEAL

Colby Company engineering
A/E INFO

APPROVED
David W. Thurnfield
FOR COMMANDER NAVFAC

ACTIVITY
TIM FISHER
C. 2370.6 BRANCH HEAD

SATISFACTORY TO DATE 10/28/2016

DES BCT | DRW ERB | CHK BCT

PM/DM PETER STOCKLESS

BRANCH MANAGER IAN BODWELL

FEAD/PM&E AMIN BAHROUR

FIRE PROTECTION PATRICK BAKAJ

DEPARTMENT OF THE NAVY
NAVAL FACILITIES ENGINEERING COMMAND
PUBLIC WORKS DEPARTMENT - MAINE

NAVAL FACILITIES ENGINEERING COMMAND ~ MID-ATLANTIC
NAVAL SHIPYARD - PORTSMOUTH, NH

PORTSMOUTH NAVAL SHIPYARD
KITTERY, ME

DRY DOCK #1 DEFUELING COMPLEX
M-140 COMPLEX

GENERAL ARRANGEMENT RENDERING (NO STORAGE ENCLOSURE)

EPROJECT NO.: 1363311

CONSTR. CONTR. NO.
N40085-17-C-5002

NAVFAC DRAWING NO.
12734793

SHEET 10 OF 188

GA-901 | DD1-16-874

DRAWFORM REVISION: 10 OCTOBER 2014

10/28/2016 6:32:47 AM X:\297 PORTSMOUTH NAVAL SHIPYARD\297.005.001 - DD#1 DEFUELING COMPLEX DESIGN\DRAWINGS\M140\SHEETS\GA-901.DWG

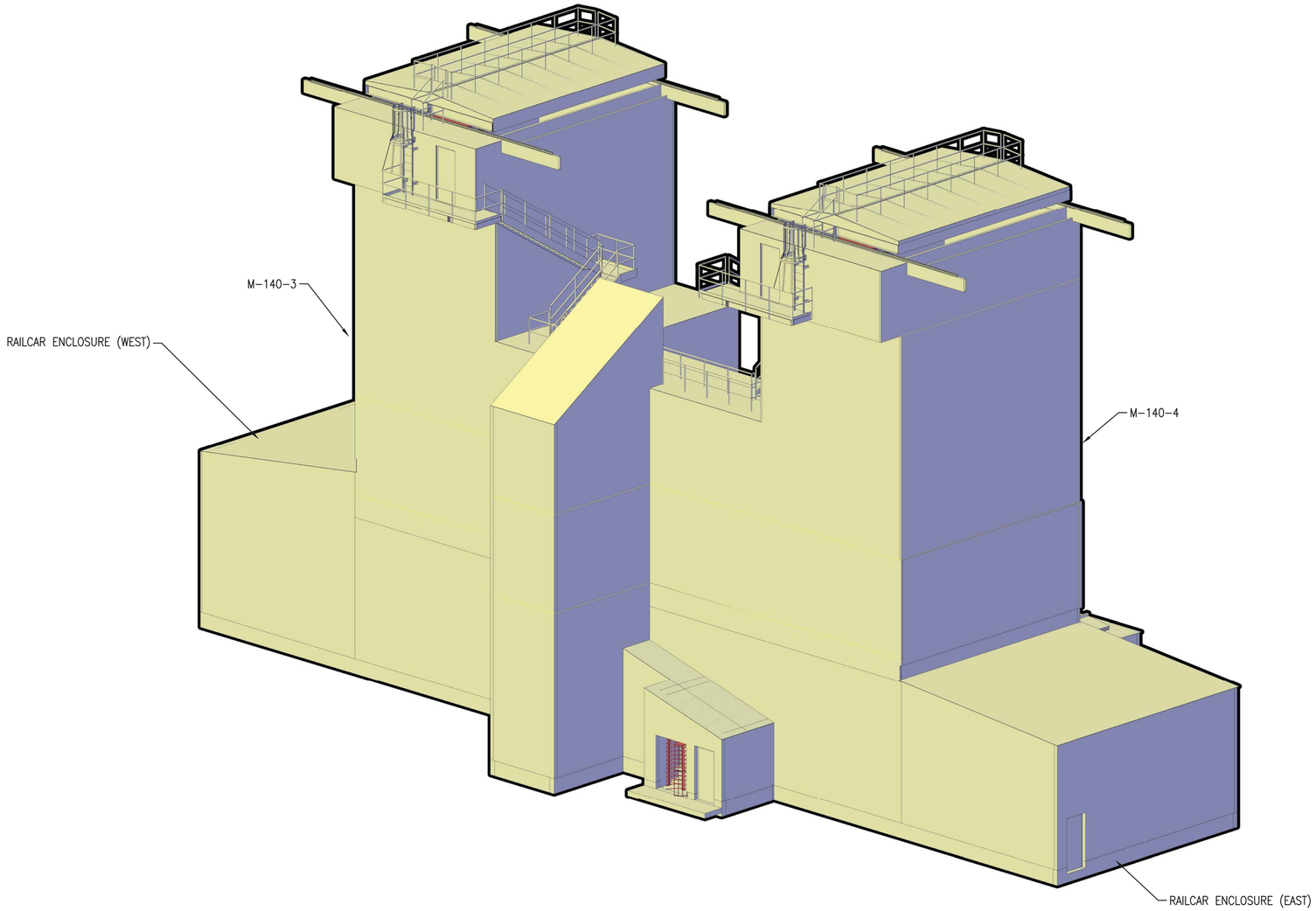

GENERAL ARRANGEMENT - RENDERING (A1)

SCALE: NTS

SYM	DESCRIPTION	DATE	APPR
0	ISSUED FOR CONSTRUCTION	10/28/2016	CBC

NAVFAC

STATE OF MAINE
BENJAMIN C. TOWNSEND
No.13287
LICENSED
PROFESSIONAL ENGINEER
10/28/16
SEAL

Colby Company engineering
A/E INFO

APPROVED
David W. Thurnfield
FOR COMMANDER NAVFAC

ACTIVITY
TIM FISHER
C. 2370.6 BRANCH HEAD

SATISFACTORY TO DATE 10/28/2016

DES BCT | DRW ERB | CHK BCT

PM/DM PETER STOCKLESS
BRANCH MANAGER IAN BODWELL
FEAD/PM&E AMIN BAHROUR
FIRE PROTECTION PATRICK BAKAJ

DEPARTMENT OF THE NAVY
NAVAL FACILITIES ENGINEERING COMMAND
PUBLIC WORKS DEPARTMENT - MAINE

NAVAL FACILITIES ENGINEERING COMMAND ~ MID-ATLANTIC
NAVAL SHIPYARD - PORTSMOUTH, NH

PORTSMOUTH NAVAL SHIPYARD
KITTERY, ME

DRY DOCK #1 DEFUELING COMPLEX
M-140 COMPLEX

GENERAL ARRANGEMENT – RENDERING

EPROJECT NO.: 1363311

CONSTR. CONTR. NO.
N40085-17-C-5002

NAVFAC DRAWING NO.
12734794

SHEET 11 OF 188

GA-901A | DD1-16-875

DRAWFORM REVISION: 10 OCTOBER 2014

10/28/2016 6:33:12 AM X:\297 PORTSMOUTH NAVAL SHIPYARD\297.005.001 - DD#1 DEFUELING COMPLEX DESIGN\DRAWINGS\M140\SHEETS\GA-901A.DWG

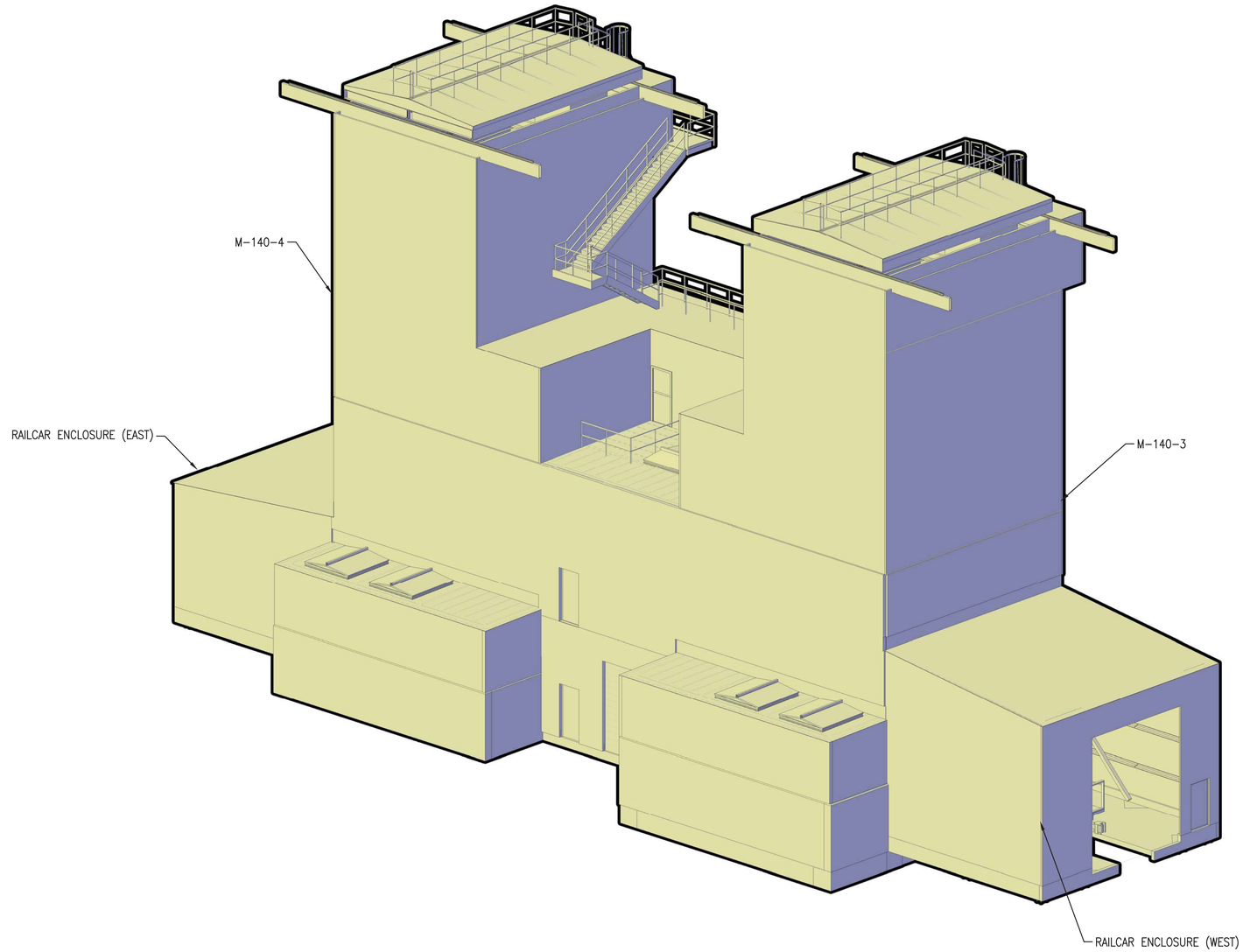

GENERAL ARRANGEMENT RENDERING (NO STORAGE ENCLOSURE) A1

SCALE: NTS

SYM	DESCRIPTION	DATE	APPR
0	ISSUED FOR CONSTRUCTION	10/28/2016	CBC

NAVFAC

STATE OF MAINE
BENJAMIN C. TOWNSEND
No. 13287
LICENSED
PROFESSIONAL ENGINEER
10/28/16
SEAL

Colby Company engineering
A/E INFO

APPROVED
David W. Thurnfield
FOR COMMANDER NAVFAC

ACTIVITY
TIM FISHER
C. 2370.6 BRANCH HEAD

SATISFACTORY TO DATE 10/28/2016

DES BCT DRW ERB CHK BCT

PMDM PETER STOCKLESS

BRANCH MANAGER IAN BODWELL

FEA/DPM&E AMIN BAHROUR

FIRE PROTECTION PATRICK BAKAJ

DEPARTMENT OF THE NAVY
NAVAL FACILITIES ENGINEERING COMMAND
PUBLIC WORKS DEPARTMENT - MAINE
NAVAL FACILITIES ENGINEERING COMMAND ~ MID-ATLANTIC
NAVAL SHIPYARD - PORTSMOUTH, NH
PORTSMOUTH NAVAL SHIPYARD
KITTERY, ME
DRY DOCK #1 DEFUELING COMPLEX
M-140 COMPLEX
GENERAL ARRANGEMENT RENDERING (NO STORAGE ENCLOSURE)

EPROJECT NO.: 1363311

CONSTR. CONTR. NO. N40085-17-C-5002

NAVFAC DRAWING NO. 12734795

SHEET 12 OF 188

GA-902 DD1-16-876

DRAWFORM REVISION: 10 OCTOBER 2014

10/28/2016 6:33:35 AM X:\297 PORTSMOUTH NAVAL SHIPYARD\297.005.001 - DD#1 DEFUELING COMPLEX DESIGN\DRAWINGS\M140\SHEETS\GA-902.DWG

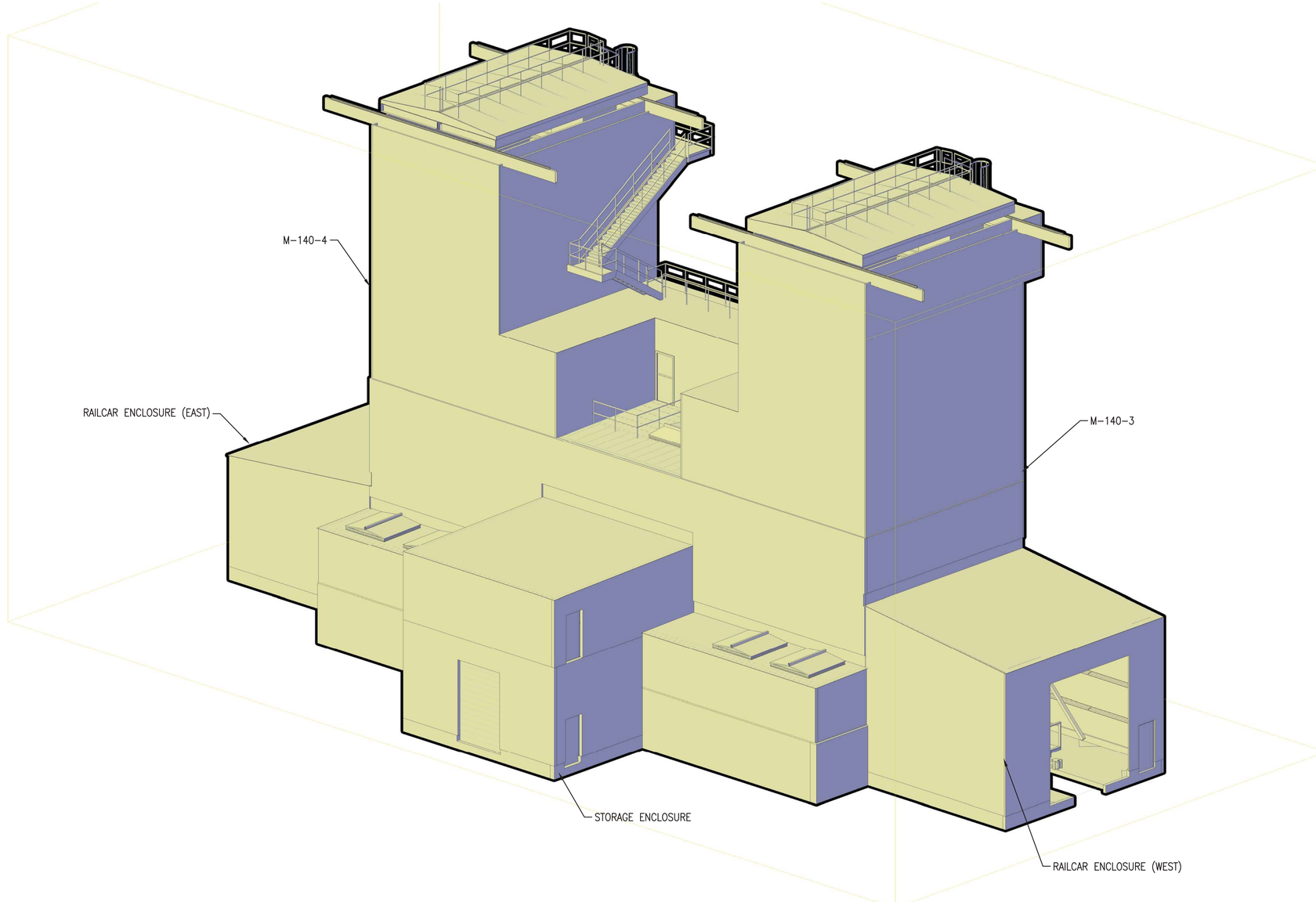

GENERAL ARRANGEMENT - RENDERING (A1)

SCALE: NTS

SYM	DESCRIPTION	DATE	APPR
0	ISSUED FOR CONSTRUCTION	10/28/2016	CBC

NAVFAC

STATE OF MAINE
BENJAMIN C. TOWNSEND
No.13287
LICENSED
PROFESSIONAL ENGINEER
10/28/16
SEAL

Colby Company engineering
A/E INFO

APPROVED
David W. Thurnfield
FOR COMMANDER NAVFAC

ACTIVITY
TIM FISHER
C. 2370.6 BRANCH HEAD

SATISFACTORY TO DATE 10/28/2016

DES	BCT	DRW ERB	CHK BCT

PM/DM PETER STOCKLESS
BRANCH MANAGER IAN BODWELL
FEAD/PM&E AMIN BAHROUR
FIRE PROTECTION PATRICK BAKAJ

DEPARTMENT OF THE NAVY
NAVAL FACILITIES ENGINEERING COMMAND
PUBLIC WORKS DEPARTMENT - MAINE
NAVAL FACILITIES ENGINEERING COMMAND ~ MID-ATLANTIC
NAVAL SHIPYARD - PORTSMOUTH NH
PORTSMOUTH NAVAL SHIPYARD
KITTERY, ME
DRY DOCK #1 DEFUELING COMPLEX
M-140 COMPLEX
GENERAL ARRANGEMENT – RENDERING

EPROJECT NO.: 1363311
CONSTR. CONTR. NO. N40085-17-C-5002
NAVFAC DRAWING NO. 12734796
SHEET 13 OF 188
GA-902A DD1-16-877

DRAWFORM REVISION: 10 OCTOBER 2014

10/28/2016 6:34:00 AM X:\297 PORTSMOUTH NAVAL SHIPYARD\297.005.001 - DD#1 DEFUELING COMPLEX DESIGN\DRAWINGS\M140\SHEETS\GA-902A.DWG

GENERAL NOTES

1. THE FOLLOWING DRAWINGS, LS-101 THROUGH LS-105, APPLY TO THIS CODE COMPLIANCE SUMMARY. REFER TO SITE PACKAGE SHEETS LS-001 AND LS-101 FOR MORE SITE-RELATED INFORMATION ON THE M-140 COMPLEX.
2. THE AUTHORITY HAVING JURISDICTION (AHJ) FOR FIRE PROTECTION AND LIFE SAFETY ON THIS PROJECT WILL BE THE ASSIGNED FIRE PROTECTION ENGINEER FROM NAVFAC MIDLANT.
3. THE ENCLOSURE WILL BE USED PRIMARILY FOR RADIOLOGICAL PURPOSES. PNSY DIRECTIVES AND RADIOLOGICAL STANDARDS TAKE THE HIGHEST PRECEDENCE IN DETERMINING THE ENCLOSURE DESIGN REQUIREMENTS, FOLLOWED BY UFC 3-600-10N (FINAL DRAFT) AND UFC 3-600-01.
4. BUILDING AND FIRE CODES WERE CONSULTED AND FOLLOWED FOR THE DESIGN OF THIS ENCLOSURE, BUT SOME REQUIREMENTS HAVE BEEN OVERRIDDEN DUE TO CONFLICT WITH NAVSEA REQUIREMENTS ASSOCIATED WITH THIS TYPE OF FACILITY, AS DICTATED BY PNSY AND THE AHJ.

PNSY DIRECTIVES

1. DD#1 DEFUELING ENCLOSURES SHALL NOT INCORPORATE SPRINKLER PROTECTION DUE TO RADIOLOGICAL CONTROL CONSIDERATIONS.
2. FIRE EXTINGUISHERS IN ENCLOSURES SHALL BE ABC DRY CHEMICAL TYPE, SUPPLIED AND INSTALLED BY PNSY, AND SHALL MEET NFPA 10 STANDARDS.
3. FIRE ALARM DEVICES SHALL TIE INTO AN ADDRESSABLE FACP AND RADIO TRANSMITTER IN THE ACE-3 ENCLOSURE. A REMOTE ANNUNCIATOR FOR THE COMPLEX SHALL BE INSTALLED OUTSIDE OF THE ACE-3 ENCLOSURE FOR FIRE DEPARTMENT USE.
4. MINIMAL FLAMMABLE AND COMBUSTIBLE MATERIALS WILL BE STORED AND USED IN THE ENCLOSURE AND THE ENCLOSURE DOES NOT CONSTITUTE A HIGH HAZARD GROUP H OCCUPANCY PER IBC OR NFPA DEFINITIONS.
5. PNSY MAY PERFORM WELDING AND OTHER HOT WORK INSIDE THE M-140 COMPLEX. PNSY STANDARDS AND PROTOCOL SHALL APPLY WHEN HOT WORK IS BEING PERFORMED.
6. AREAS WITHIN CONTROL BOUNDARIES WILL BE USED FOR RADIOLOGICAL PURPOSES AND SHALL BE CONSTRUCTED SO AS TO MINIMIZE CRACKS AND CREVICES. IN ADDITION, THESE AREAS SHALL BE CONSTRUCTED WITH CLEANLINESS AND CAPTIVATION IN MIND, WITH SELF-LOCKING FASTENERS USED AS MUCH AS PRACTICAL.
7. FIRE ALARM SYSTEM SHALL NOT TIE INTO THE AIR HANDLING EQUIPMENT OR MOVEABLE ROOF CONTROLS. AUTOMATIC ACTUATION OF THIS EQUIPMENT COULD HARM PERSONNEL AND INTERFERE WITH RADIOLOGICAL CONTROLS.

UFC 3-600-01 - FIRE PROTECTION ENGINEERING FOR FACILITIES, 2013

1. THIS UFC STANDARD REFERENCES THE FOLLOWING DOCUMENTS:
   - 1.1. NFPA 1: FIRE LANE DIMENSIONS
   - 1.2. NFPA 10: FIRE EXTINGUISHERS (TO BE LOCATED, PROVIDED, AND INSTALLED BY PNSY)
   - 1.3. NFPA 72: FIRE ALARM
   - 1.4. NFPA 101: EGRESS AND LIFE SAFETY
   - 1.5. IBC: OCCUPANCY CLASSIFICATION, BUILDING CONSTRUCTION, ALLOWABLE AREAS AND HEIGHTS
2. TABLE C-1, HYDRANT FLOW RATE REQUIREMENTS: 1,500 GPM AT 20 PSI.
   - 2.1. UP TO 1,250 GPM CAN COME FROM A SINGLE HYDRANT.
   - 2.2. THE DESIGN TEAM WAS NOT ABLE TO PERFORM A HYDRANT FLOW TEST WITHIN THE DESIGN PERIOD DUE TO ACTIVE ON-GOING OPERATIONS. A FLOW TEST WILL BE CONDUCTED BY THE TEAM PRIOR TO PROJECT CONSTRUCTION AND RESULTS WILL BE SUBMITTED IN AN ADDENDUM.
   - 2.3. BASED ON DATA SUPPLIED BY PNSY, HYDRANT #37 HAS A FLOW RATE OVER 1,000 GPM AT A RESIDUAL PRESSURE OF APPROXIMATELY 60 PSI. A NEW HYDRANT IS PROPOSED ADJACENT TO THE M-140 COMPLEX. IT IS ANTICIPATED THAT THE SYSTEM WILL BE CAPABLE OF PROVIDING THE DESIGN HYDRANT FLOW RATE AND THIS WILL BE ADDRESSED IN A SEPARATE ADDENDUM.
   - 2.4. HYDRANT #35 IS AND THE NEW HYDRANT WILL BE WITHIN 350 FT HOSE LAY DISTANCE FROM M-140 COMPLEX. REFER TO SITE PACKAGE LS-101.
3. 2-10.4, 3-7.3.3: FIRE DEPARTMENT CONNECTION TO STANDPIPE SHALL BE WITHIN 150 FT OF A HYDRANT AND ALL-WEATHER GROUND ACCESS FOR PUMPER APPARATUS.
4. 4-5.1: STANDPIPE SHALL BE CLASS I WITH 2-1/2 INCH HOSE CONNECTIONS FOR FIRE DEPARTMENT USE.

NFPA 1 - FIRE CODE, 2015

1. FIRE DEPARTMENT ACCESS TO M-140 IS VIA TWO FIRE LANES. REFER TO THE SITE PACKAGE SHEET LS-101 FOR MORE INFORMATION.
2. 8.2.3.2.1: FIRE DEPARTMENT ACCESS ROAD IS WITHIN 50 FEET OF AT LEAST ONE EXTERIOR WALL.
3. 8.2.3.2.2: FIRE DEPARTMENT ACCESS ROAD IS WITHIN 150 FEET OF ANY EXTERIOR WALL.
4. 18.2.3.4: FIRE DEPARTMENT ACCESS ROAD HAS AN UNOBSTRUCTED WIDTH OF AT LEAST 20 FEET AND A VERTICAL CLEARANCE OF AT LEAST 13.5 FEET.

INTERNATIONAL BUILDING CODE, 2015

1. OCCUPANCY CLASSIFICATION: GROUP U, UTILITY AND MISCELLANEOUS
2. BUILDING CONSTRUCTION: TYPE IIB, NON-COMBUSTIBLE, UNPROTECTED
3. FIRE WALLS AND BARRIERS:
   SECTION 3104.5.1.1: PASSAGEWAYS SHALL BE SEPARATED FROM THE INTERIOR OF THE M-140 COMPLEX BY 2-HR FIRE BARRIERS. THE BARRIERS SHALL EXTEND 10 FEET (OR TO THE EDGE OF THE WALL, IF SHORTER THAN 10 FEET) IN EVERY DIRECTION SURROUNDING THE PERIMETER OF THE CONNECTION. REFER TO SITE PACKAGE SHEET LS-101.
4. ALLOWABLE NUMBER OF STORIES: TWO
   ACTUAL NUMBER OF STORIES: FOUR – EXCEEDS TABLE 503 BUT IS ACCEPTABLE PER SECTION 503.1.
   EQUIPMENT PLATFORMS DO NOT COUNT AS STORIES BECAUSE THEIR AGGREGATE AREA IS LESS THAN 2/3 OF THE GROUND FLOOR AREA
5. NUMBER OF FLOORS BELOW GRADE: NONE
6. TABLE 503, ALLOWABLE AREA: 8,500 SQUARE FEET
   ACTUAL ENCLOSURE AREA: 14,600 SQUARE FEET – EXCEEDS TABLE 503 BUT THIS IS ACCEPTABLE PER SECTION 503.1.
   - LEVEL 0: 6,350 SQ FT
   - LEVEL 1: 3,300 SQ FT
   - LEVEL 2: 2,750 SQ FT
   - LEVEL 3: 2,200 SQ FT
7. TABLE 503, ALLOWABLE HEIGHT: 55 FEET
   ACTUAL ENCLOSURE HEIGHT: APPROX 75 FEET TO BOTTOM OF ROOF MODULE – EXCEEDS TABLE 503 BUT IS ACCEPTABLE PER SECTION 503.1.
8. 905.1: CLASS III STANDPIPE SYSTEMS SHALL BE INSTALLED THROUGHOUT BUILDINGS WHERE THE FLOOR LEVEL OF THE HIGHEST STORY IS LOCATED MORE THAN 30 FEET ABOVE THE LOWEST LEVEL OF FIRE DEPARTMENT VEHICLE ACCESS.
   - 8.1. UFC 3-600-01 SPECIFIES CLASS I STANDPIPES, WHICH TAKES PRECEDENCE OVER THE IBC.
   - 8.2. NFPA 14 PERMITS A MANUAL DRY STANDPIPE SINCE THIS IS NOT A HIGH RISE BUILDING AND THE STAIRWELL IS SUBJECT TO FREEZING.
9. 1009.3: INTERIOR EXIT ACCESS STAIRWAYS IN M-140 TOWERS ARE CONSTRUCTED SO THAT THERE IS NO ATMOSPHERIC COMMUNICATION BETWEEN MORE THAN TWO STORIES. STAIRWELL DOES NOT NEED TO BE ENCLOSED AND A FIRE BARRIER IS NOT REQUIRED.
10. 1027.6: EXIT STAIRWAY SHALL BE SEPARATED FROM M-140 BY A 2-HOUR FIRE BARRIER, PER SECTION 1026.2, BECAUSE IT CONNECTS 4 STORIES.

NFPA 101 - LIFE SAFETY CODE, 2015

1. OCCUPANCY CLASSIFICATION: INDUSTRIAL, SPECIAL PURPOSE (CHAPTER 40)
2. NUMBER OF OCCUPANTS: 48
3. TABLE 40.2.5.2.1, MINIMUM HORIZONTAL DIMENSION OF WALKWAYS, PLATFORMS: 22 INCHES
4. NUMBER OF EXITS REQUIRED: TWO
   NUMBER OF EXITS PROVIDED: THREE ON LEVEL 0, TWO ON LEVELS 1, 2, AND 3
5. TABLE 40.2.6, MAXIMUM TRAVEL DISTANCE TO EXIT: 300 FT
   ACTUAL MAXIMUM LENGTH OF TRAVEL: 265 FT (LEVEL 3)
6. MAXIMUM COMMON PATH OF TRAVEL: 50 FT
   ACTUAL MAXIMUM COMMON PATH OF TRAVEL: 40 FT (LEVELS 2 AND 3)
7. DEAD END CORRIDORS ARE NOT PRESENT.
8. 7.2.9.1: LADDERS ARE PERMITTED FOR EGRESS FROM EQUIPMENT PLATFORMS IF THEY COMPLY WITH ANSI A14.3 "SAFETY REQUIREMENTS FOR FIXED LADDERS".

NFPA 801- STANDARD FOR FIRE PROTECTION FOR FACILITIES HANDLING RADIOACTIVE MATERIALS, 2014

1. AREAS REQUIRING SPECIAL CLEANLINESS CONSIDERATION: M-140-3 AND M-140-4 TOWERS
   - 1.1. MINIMIZE SURFACE-MOUNTED ITEMS/WIRING AT LEVEL 1 FOR CLEANING PURPOSES.
2. INTERIOR WALL AND CEILING FINISHES SHALL BE CLASS A IN ACCORDANCE WITH NFPA 255.
3. INTERIOR FLOOR FINISHES SHALL BE CLASS I IN ACCORDANCE WITH NFPA 253.

NFPA 14- STANDARD FOR THE INSTALLATION OF STANDPIPE AND HOSE SYSTEMS, 2013

1. 3.3.5: HIGHEST OCCUPIABLE FLOOR IS LESS THAN 75 FEET ABOVE GRADE. NOT CONSIDERED A HIGH-RISE BUILDING.
2. 5.4.1.1: MANUAL DRY STANDPIPES ARE PERMITTED WHERE SUBJECT TO FREEZING IN NON-HIGH-RISE BUILDINGS.

ABBREVIATIONS

AFF	ABOVE FINISHED FLOOR
AFG	ABOVE FINISHED GRADE
AHJ	AUTHORITY HAVING JURISDICTION
BFG	BELOW FINISHED GRADE
BLDG	BUILDING
CLG	CEILING
CO2	CARBON DIOXIDE
DB	DIRECT BURIED
DISC	DISCONNECT
DN	DOWN
EQP	EQUIPMENT
EXIST	EXISTING
FAA	FIRE ALARM ANNUNCIATOR
FACP	FIRE ALARM CONTROL PANEL
FBO	FURNISHED BY OTHERS
FFE	FINAL FOUNDATION ELEVATION
FLR	FLOOR
GEN	GENERATOR
GND	GROUND
IBC	INTERNATIONAL BUILDING CODE
MAX	MAXIMUM
MFR	MANUFACTURER
NC	NORMALLY CLOSED
NEC	NATIONAL ELECTRIC CODE
NEG	NEGATIVE
NFPA	NATIONAL FIRE PROTECTION ASSOCIATION
NIC	NOT IN CONTRACT
NTS	NOT TO SCALE
PNSY	PORTSMOUTH NAVAL SHIPYARD
RFP	REQUEST FOR PROPOSAL
RM	ROOM
UFC	UNIFIED FACILITIES CRITERIA

SYM	DESCRIPTION	DATE	APPR
0	ISSUED FOR CONSTRUCTION	10/28/2016	CBC

NAVFAC

STATE OF MAINE
EMILY PINYARD
No. 12126
LICENSED
PROFESSIONAL ENGINEER
10/28/16
SEAL

Colby Company engineering
A/E INFO

APPROVED
David W. Grunfeld
FOR COMMANDER NAVFAC

ACTIVITY
TIM FISHER
C. 2370.6 BRANCH HEAD

SATISFACTORY TO DATE 10/28/2016
DES ERP | DRW CSS | CHK WEP
PMDM PETER STOCKLESS
BRANCH MANAGER IAN BODWELL
FEA/DPM&E AMIN BAHROUR
FIRE PROTECTION PATRICK BAKAJ

DEPARTMENT OF THE NAVY
NAVAL FACILITIES ENGINEERING COMMAND
PUBLIC WORKS DEPARTMENT, MAINE
NAVAL FACILITIES ENGINEERING COMMAND ~ MID-ATLANTIC
NAVAL SHIPYARD, PORTSMOUTH, NH
PORTSMOUTH NAVAL SHIPYARD
KITTERY, ME
DRY DOCK #1 DEFUELING COMPLEX
M-140 COMPLEX
LIFE SAFETY ABBREVIATIONS AND GENERAL NOTES

EPROJECT NO.: 1363311
CONSTR. CONTR. NO. N40085-17-C-5002
NAVFAC DRAWING NO. 12734797
SHEET 14 OF 188
LS-001 | DD1-16-878

DRAWFORM REVISION: 10 OCTOBER 2014

10/28/2016 6:34:06 AM X:\297 PORTSMOUTH NAVAL SHIPYARD\297.005.001 - DD#1 DEFUELING COMPLEX DESIGN\DRAWINGS\M140\SHEETS\LS-001.DWG

NOTES

1. SEE SHEET LS-001 FOR ABBREVIATIONS AND GENERAL NOTES.
2. SEE SHEET LS-101 IN THE SITE PACKAGE FOR A SITE-LEVEL LAYOUT OF THE M-140 COMPLEX AND PASSAGEWAYS.
3. MAXIMUM TRAVEL DISTANCES SHOWN FACTOR IN TRAVEL TO NEAREST TWO EXITS, NOT THE MOST REMOTE EXITS AVAILABLE.

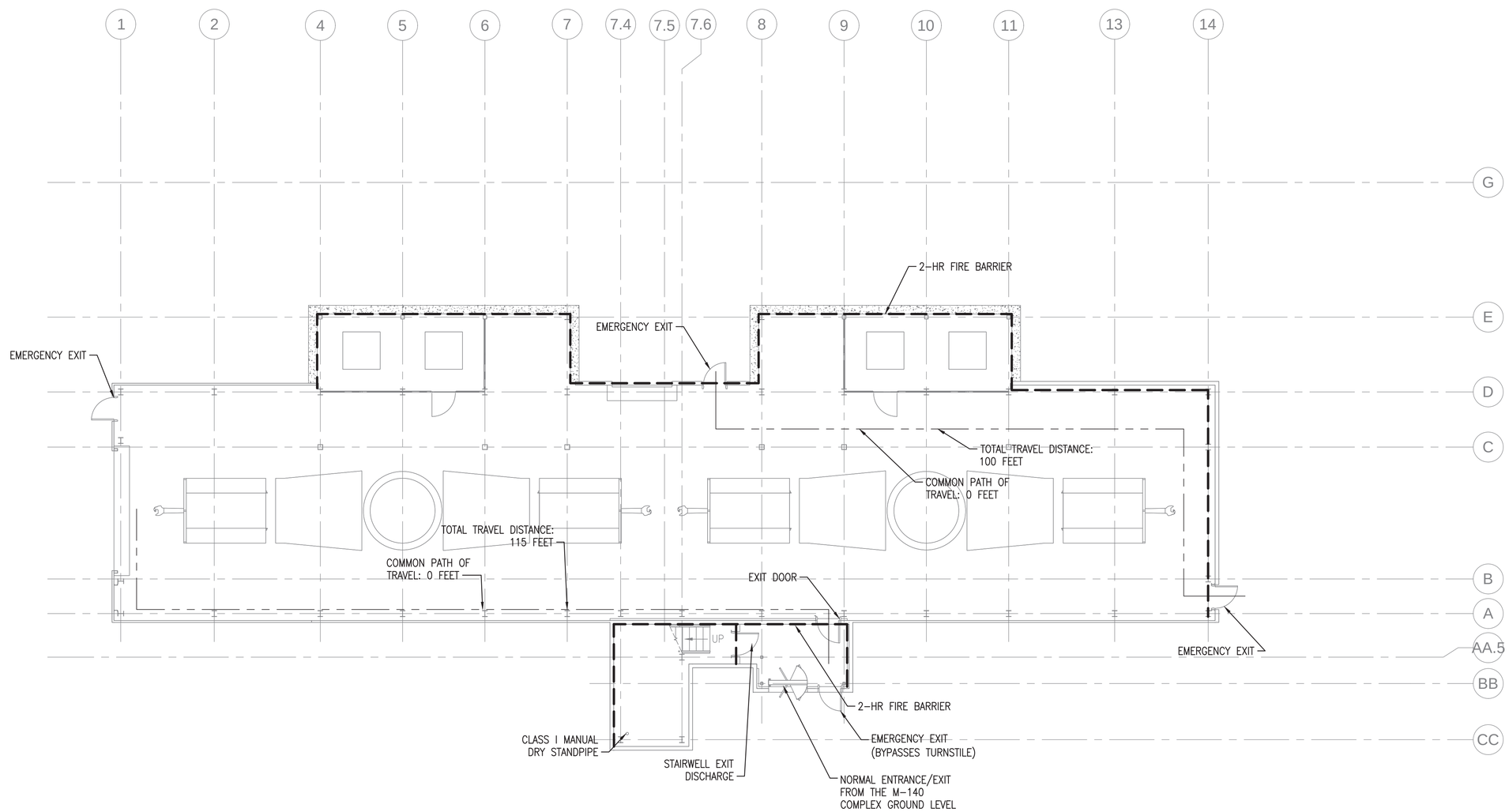

PLAN NORTH

GROUND LEVEL LIFE SAFETY PLAN (NO STORAGE ENCLOSURE)

SCALE: 1/8" = 1'-0"

0 4' 8' 16'
Scale: 1/8" = 1'-0"

SYM	DESCRIPTION	DATE	APPR
0	ISSUED FOR CONSTRUCTION	10/28/2016	CBC

NAVFAC

STATE OF MAINE
EMILY PINYARD
No. 12126
LICENSED
PROFESSIONAL ENGINEER
10/28/16
SEAL

Colby Company engineering
A/E INFO

APPROVED
David W. Thumfold
FOR COMMANDER NAVFAC

ACTIVITY
TIM FISHER
C. 2370.6 BRANCH HEAD

SATISFACTORY TO DATE 10/28/2016

DES	DRW	CHK
EAF	CSS	AHS

PMDM: PETER STOCKLESS
BRANCH MANAGER: IAN BODWELL
FEAD/PM&E: AMIN BAHROUR
FIRE PROTECTION: PATRICK BAKAJ

DEPARTMENT OF THE NAVY
NAVAL FACILITIES ENGINEERING COMMAND
PUBLIC WORKS DEPARTMENT - MAINE
NAVAL FACILITIES ENGINEERING COMMAND ~ MID-ATLANTIC
NAVAL SHIPYARD - PORTSMOUTH, NH
PORTSMOUTH NAVAL SHIPYARD
KITTERY, ME
DRY DOCK #1 DEFUELING COMPLEX
M-140 COMPLEX
GROUND LEVEL LIFE SAFETY PLAN (NO STORAGE ENCLOSURE)

EPROJECT NO.: 1363311
CONSTR. CONTR. NO. N40085-17-C-5002
NAVFAC DRAWING NO. 12734798
SHEET 15 OF 188
LS-100 | DD1-16-879

DRAWFORM REVISION: 10 OCTOBER 2014

10/28/2016 6:34:11 AM X:\297 PORTSMOUTH NAVAL SHIPYARD\297.005.001 - DD#1 DEFUELING COMPLEX DESIGN\DRAWINGS\M140\SHEETS\LS-100.DWG

NOTES

1. SEE SHEET LS-001 FOR ABBREVIATIONS AND GENERAL NOTES.
2. SEE SHEET LS-101 IN THE SITE PACKAGE FOR A SITE-LEVEL LAYOUT OF THE M-140 COMPLEX AND PASSAGEWAYS.
3. MAXIMUM TRAVEL DISTANCE SHOWN FACTORS IN TRAVEL TO NEAREST TWO EXITS, NOT THE MOST REMOTE EXITS AVAILABLE.

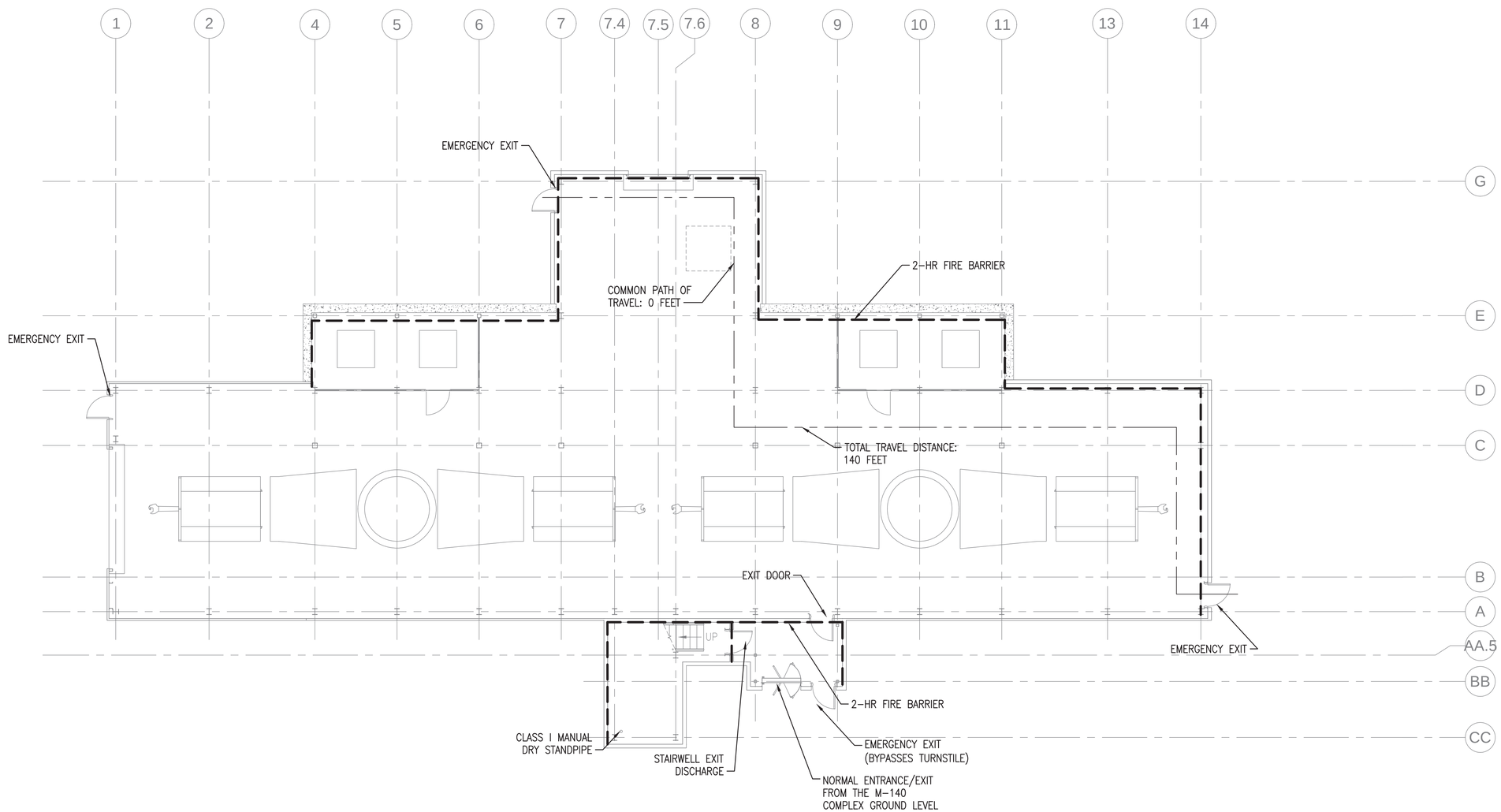

GROUND LEVEL LIFE SAFETY PLAN

SCALE: 1/8" = 1'-0"

0 4' 8' 16'
Scale: 1/8" = 1'-0"

SYM	DESCRIPTION	DATE	APPR
0	ISSUED FOR CONSTRUCTION	10/28/2016	CBC

NAVFAC

STATE OF MAINE
EMILY PINYARD
No. 12126
LICENSED
PROFESSIONAL ENGINEER
10/28/16
SEAL

Colby Company engineering
A/E INFO

APPROVED
David W. Thumfuld
FOR COMMANDER NAVFAC

ACTIVITY
TIM FISHER
C. 2370.6 BRANCH HEAD

SATISFACTORY TO DATE 10/28/2016
DES ERP DRW CSS CHK WEP
PMDM PETER STOCKLESS
BRANCH MANAGER IAN BODWELL
FEA/DPM&E AMIN BAHROUR
FIRE PROTECTION PATRICK BAKAJ

DEPARTMENT OF THE NAVY
NAVAL FACILITIES ENGINEERING COMMAND
PUBLIC WORKS DEPARTMENT - MAINE
NAVAL FACILITIES ENGINEERING COMMAND ~ MID-ATLANTIC
NAVAL SHIPYARD - PORTSMOUTH, NH
PORTSMOUTH NAVAL SHIPYARD
KITTERY, ME
DRY DOCK #1 DEFUELING COMPLEX
M-140 COMPLEX
GROUND LEVEL LIFE SAFETY PLAN

EPROJECT NO.: 1363311
CONSTR. CONTR. NO. N40085-17-C-5002
NAVFAC DRAWING NO. 12734799
SHEET 16 OF 188
LS-100A DD1-16-880

DRAWFORM REVISION: 10 OCTOBER 2014

10/28/2016 6:34:15 AM X:\297 PORTSMOUTH NAVAL SHIPYARD\297.005.001 - DD#1 DEFUELING COMPLEX DESIGN\DRAWINGS\M140\SHEETS\LS-100A.DWG

NOTES

1. SEE SHEET LS-001 FOR ABBREVIATIONS AND GENERAL NOTES.
2. SEE SHEET LS-101 IN THE SITE PACKAGE FOR A SITE-LEVEL LAYOUT OF THE M-140 COMPLEX AND PASSAGEWAYS.
3. TRAVEL DISTANCES SHOWN APPLY TO BOTH M-140 TOWER SECTIONS.

KEYED NOTES

1. 2-HR FIRE BARRIER FOR PASSAGEWAY CONNECTION AND SEPARATION FROM M-140 COMPLEX.
2. EXIT DISCHARGE THROUGH PASSAGEWAY. SEE SITE PACKAGE SHEET G-102 FOR PASSAGEWAY LAYOUT.
3. INTERIOR EXIT ACCESS STAIR DOES NOT NEED TO BE ENCLOSED PER THE IBC. REFER TO LS-102 FOR MORE INFORMATION.

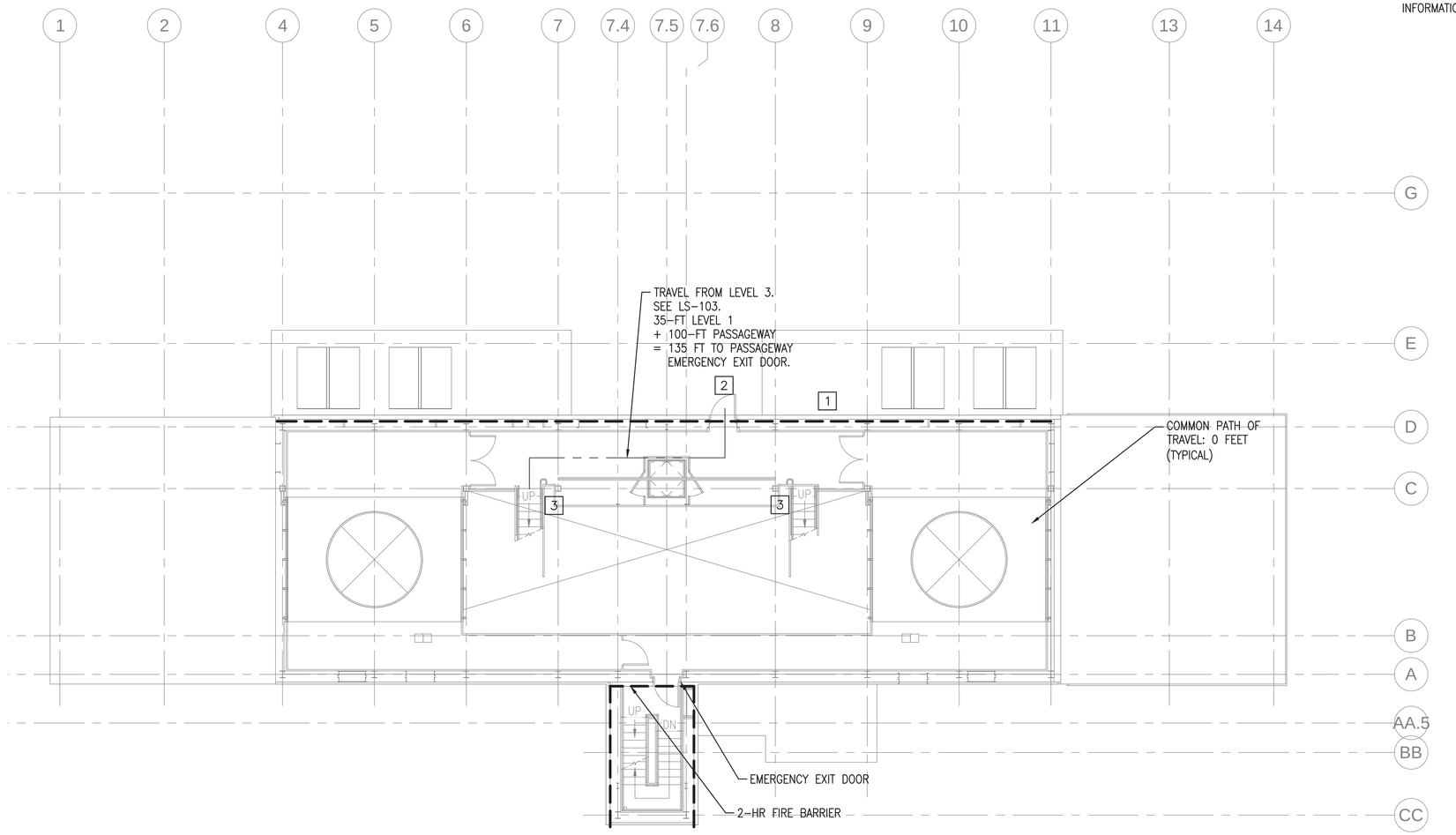

PLAN NORTH

LEVEL 1 LIFE SAFETY PLAN (NO STORAGE ENCLOSURE)

SCALE: 1/8" = 1'-0"

0 4' 8' 16'
Scale: 1/8" = 1'-0"

SYM	DESCRIPTION	DATE	APPR
0	ISSUED FOR CONSTRUCTION	10/28/2016	CBC

NAVFAC

STATE OF MAINE
EMILY PINYARD
No. 12126
LICENSED
PROFESSIONAL ENGINEER
10/28/16
SEAL

Colby Company engineering
A/E INFO

APPROVED
David W. Thumfeld
FOR COMMANDER NAVFAC

ACTIVITY
TIM FISHER
C. 2370.6 BRANCH HEAD

SATISFACTORY TO DATE 10/28/2016

DES	EAF	DRW CSS	CHK AHS

PMDM	PETER STOCKLESS
BRANCH MANAGER	IAN BODWELL
FEAD/PM&E	AMIN BAHROUR
FIRE PROTECTION	PATRICK BAKAJ

DEPARTMENT OF THE NAVY
NAVAL FACILITIES ENGINEERING COMMAND
PUBLIC WORKS DEPARTMENT - MAINE

NAVAL FACILITIES ENGINEERING COMMAND ~ MID-ATLANTIC
NAVAL SHIPYARD - PORTSMOUTH, NH

PORTSMOUTH NAVAL SHIPYARD
KITTERY, ME

DRY DOCK #1 DEFUELING COMPLEX
M-140 COMPLEX

LEVEL 1 LIFE SAFETY PLAN (NO STORAGE ENCLOSURE)

EPROJECT NO.: 1363311

CONSTR. CONTR. NO.
N40085-17-C-5002

NAVFAC DRAWING NO.
12734800

SHEET 17 OF 188

LS-101 | DD1-16-881

DRAWFORM REVISION: 10 OCTOBER 2014

10/28/2016 6:34:20 AM X:\297 PORTSMOUTH NAVAL SHIPYARD\297.005.001 - DD#1 DEFUELING COMPLEX DESIGN\DRAWINGS\M140\SHEETS\LS-101.DWG

NOTES

1. SEE SHEET LS-001 FOR ABBREVIATIONS AND GENERAL NOTES.
2. SEE SHEET LS-101 IN THE SITE PACKAGE FOR A SITE-LEVEL LAYOUT OF THE M-140 COMPLEX AND PASSAGEWAYS.
3. TRAVEL DISTANCES SHOWN APPLY TO BOTH M-140 TOWER SECTIONS.

KEYED NOTES

1. 2-HR FIRE BARRIER FOR PASSAGEWAY CONNECTION AND SEPARATION FROM M-140 COMPLEX.
2. EXIT DISCHARGE THROUGH PASSAGEWAY. APPROXIMATE 60 FT TRAVEL DISTANCE TO PASSAGEWAY EMERGENCY EXIT ACCESS DOOR. SEE SITE PACKAGE SHEET LS-101 FOR PASSAGEWAY LAYOUT.
3. INTERIOR EXIT ACCESS STAIR DOES NOT NEED TO BE ENCLOSED PER THE IBC. REFER TO LS-102 FOR MORE INFORMATION.

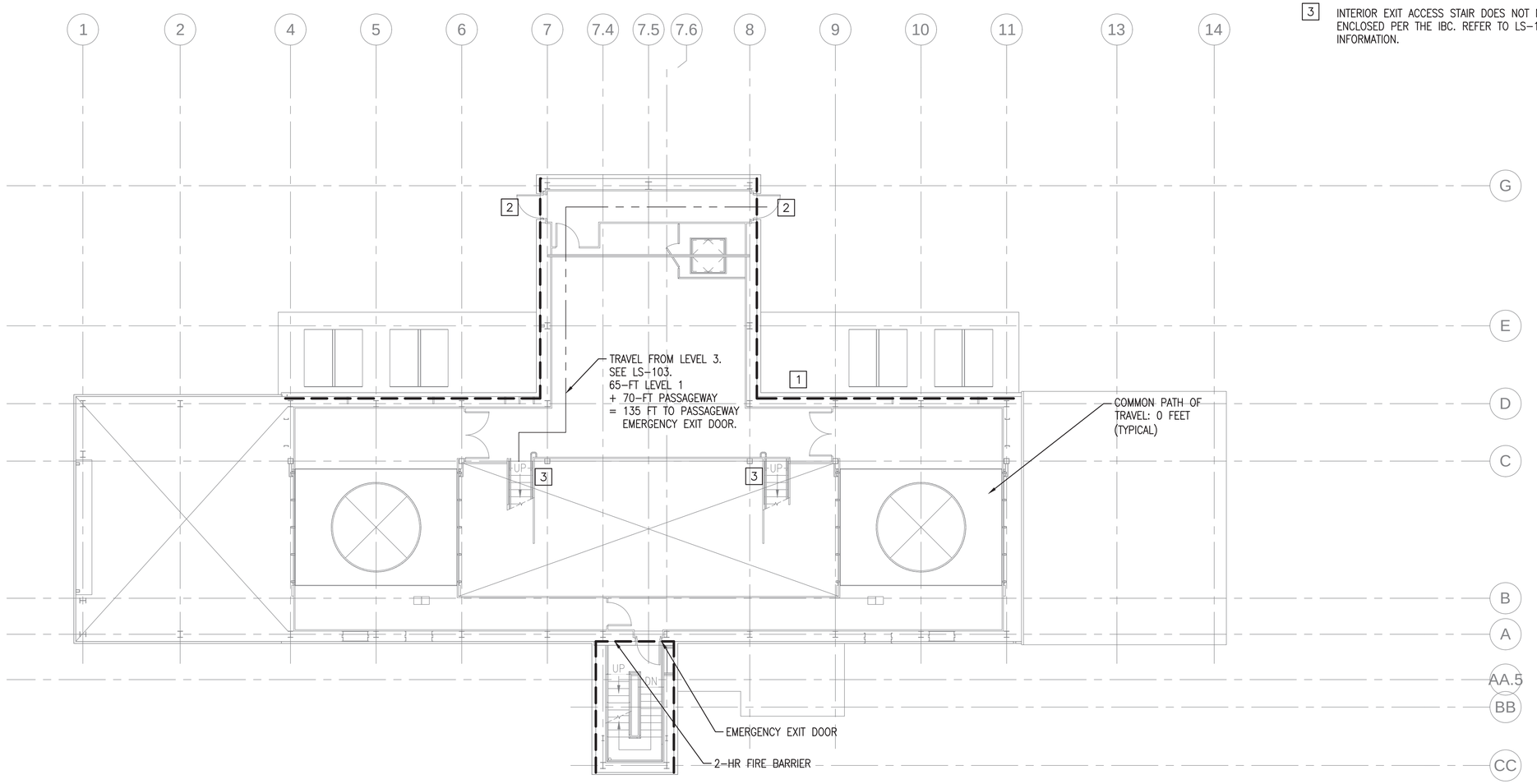

LEVEL 1 LIFE SAFETY PLAN

SCALE: 1/8" = 1'-0"

PLAN NORTH

0 4' 8' 16'
Scale: 1/8" = 1'-0"

SYM	DESCRIPTION	DATE	APPR
0	ISSUED FOR CONSTRUCTION	10/28/2016	CBC

NAVFAC

STATE OF MAINE
EMILY PINYARD
No. 12126
LICENSED
PROFESSIONAL ENGINEER
10/28/16
SEAL

Colby Company engineering
A/E INFO

APPROVED
David W. Thumfuld
FOR COMMANDER NAVFAC

ACTIVITY
TIM FISHER
C. 2370.6 BRANCH HEAD

SATISFACTORY TO DATE 10/28/2016

DES	ERP	DRW	CSS	CHK	WEP

PM/DM	PETER STOCKLESS
BRANCH MANAGER	IAN BODWELL
FEAD/PM&E	AMIN BAHROUR
FIRE PROTECTION	PATRICK BAKAJ

DEPARTMENT OF THE NAVY
NAVAL FACILITIES ENGINEERING COMMAND
PUBLIC WORKS DEPARTMENT - MAINE

NAVAL FACILITIES ENGINEERING COMMAND ~ MID-ATLANTIC
NAVAL SHIPYARD - PORTSMOUTH, NH

PORTSMOUTH NAVAL SHIPYARD
KITTERY, ME

DRY DOCK #1 DEFUELING COMPLEX
M-140 COMPLEX

LEVEL 1 LIFE SAFETY PLAN

EPROJECT NO.: 1363311

CONSTR. CONTR. NO.: N40085-17-C-5002

NAVFAC DRAWING NO. 12734801

SHEET 18 OF 188

LS-101A | DD1-16-882

DRAWFORM REVISION: 10 OCTOBER 2014

10/28/2016 6:34:24 AM X:\297 PORTSMOUTH NAVAL SHIPYARD\297.005.001 - DD#1 DEFUELING COMPLEX DESIGN\DRAWINGS\M140\SHEETS\LS-101A.DWG

NOTES

1. SEE SHEET LS-001 FOR ABBREVIATIONS AND GENERAL NOTES.
2. SEE SHEET LS-101 IN THE SITE PACKAGE FOR A SITE-LEVEL LAYOUT OF THE M-140 COMPLEX AND PASSAGEWAYS.
3. TRAVEL DISTANCES SHOWN APPLY TO BOTH M-140 TOWER SECTIONS.

KEYED NOTES

1 INTERIOR EXIT ACCESS STAIRWAY

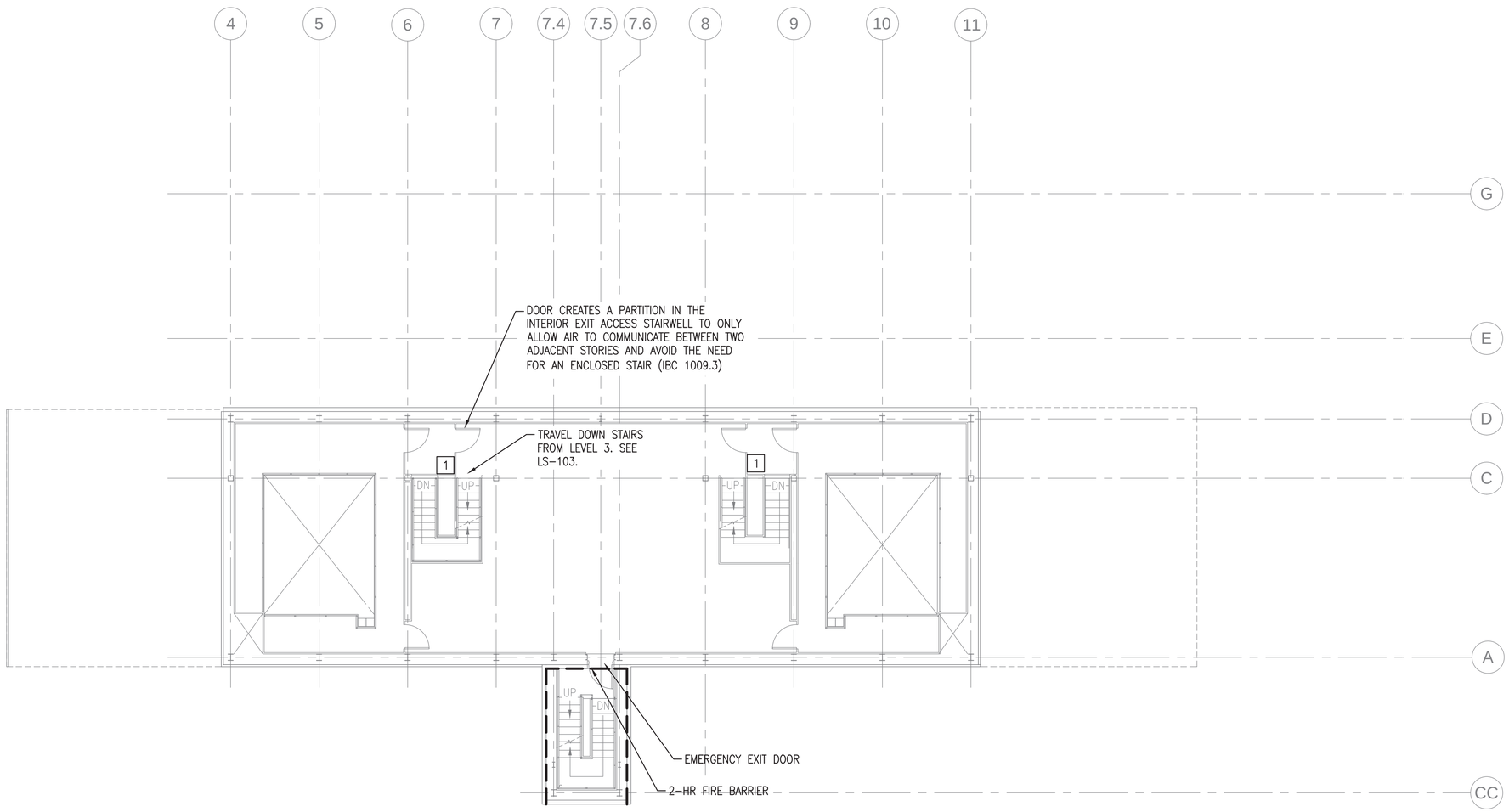

LEVEL 2 LIFE SAFETY PLAN (NO STORAGE ENCLOSURE)

SCALE: 1/8" = 1'-0"

PLAN NORTH

0 4' 8' 16'
Scale: 1/8" = 1'-0"

SYM	DESCRIPTION	DATE	APPR
0	ISSUED FOR CONSTRUCTION	10/28/2016	CBC

NAVFAC

STATE OF MAINE
EMILY PINYARD
No. 12126
LICENSED
PROFESSIONAL ENGINEER
10/28/16
SEAL

Colby Company engineering
A/E INFO

APPROVED
David W. Thurnfield
FOR COMMANDER NAVFAC

ACTIVITY
TIM FISHER
C. 2370.6 BRANCH HEAD

SATISFACTORY TO DATE 10/28/2016
DES EAF DRW CSS CHK AHS
PMDM PETER STOCKLESS
BRANCH MANAGER IAN BODWELL
FEA/DPM&E AMIN BAHROUR
FIRE PROTECTION PATRICK BAKAJ

DEPARTMENT OF THE NAVY
NAVAL FACILITIES ENGINEERING COMMAND
PUBLIC WORKS DEPARTMENT - MAINE
NAVAL FACILITIES ENGINEERING COMMAND ~ MID-ATLANTIC
NAVAL SHIPYARD - PORTSMOUTH, NH
PORTSMOUTH NAVAL SHIPYARD
KITTERY, ME
DRY DOCK #1 DEFUELING COMPLEX
M-140 COMPLEX
LEVEL 2 LIFE SAFETY PLAN (NO STORAGE ENCLOSURE)

EPROJECT NO.: 1363311
CONSTR. CONTR. NO. N40085-17-C-5002
NAVFAC DRAWING NO. 12734802
SHEET 19 OF 188
LS-102 DD1-16-883

DRAWFORM REVISION: 10 OCTOBER 2014

10/28/2016 6:34:28 AM X:\297 PORTSMOUTH NAVAL SHIPYARD\297.005.001 - DD#1 DEFUELING COMPLEX DESIGN\DRAWINGS\M140\SHEETS\LS-102.DWG

NOTES

1. SEE SHEET LS-001 FOR ABBREVIATIONS AND GENERAL NOTES.
2. SEE SHEET LS-101 IN THE SITE PACKAGE FOR A SITE-LEVEL LAYOUT OF THE M-140 COMPLEX AND PASSAGEWAYS.
3. TRAVEL DISTANCES SHOWN APPLY TO BOTH M-140 TOWER SECTIONS.

KEYED NOTES

1 INTERIOR EXIT ACCESS STAIRWAY

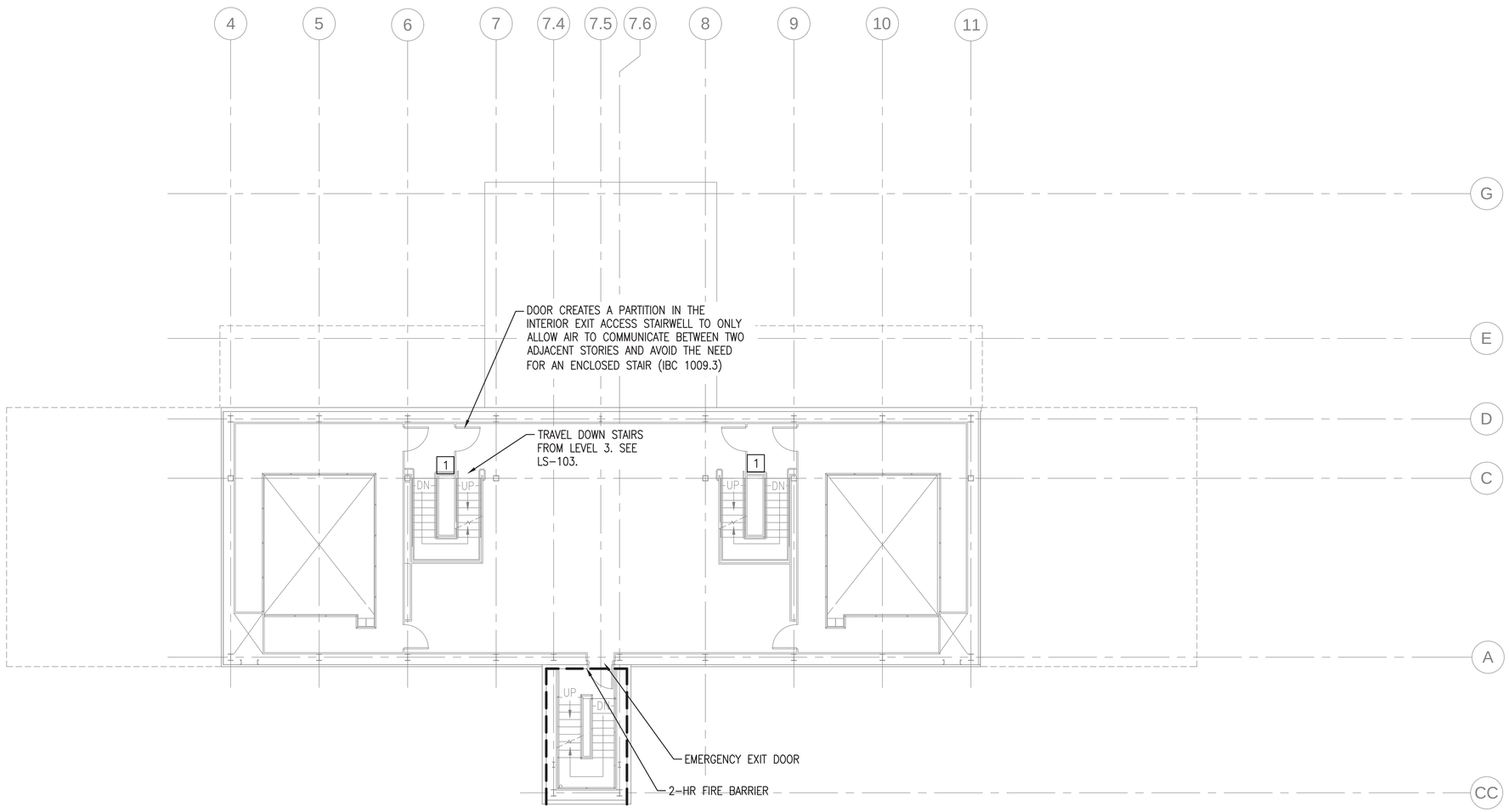

LEVEL 2 LIFE SAFETY PLAN

SCALE: 1/8" = 1'-0"

PLAN NORTH

0 4' 8' 16'
Scale: 1/8" = 1'-0"

SYM	DESCRIPTION	DATE	APPR
0	ISSUED FOR CONSTRUCTION	10/28/2016	CBC

NAVFAC

STATE OF MAINE
EMILY PINYARD
No. 12126
LICENSED
PROFESSIONAL ENGINEER
10/28/16
SEAL

Colby Company engineering
A/E INFO

APPROVED
David W. Thumfuld
FOR COMMANDER NAVFAC

ACTIVITY
TIM FISHER
C. 2370.6 BRANCH HEAD

SATISFACTORY TO DATE 10/28/2016
DES ERP DRW CSS CHK WEP
PMDM PETER STOCKLESS
BRANCH MANAGER IAN BODWELL
FEA/DPM&E AMIN BAHROUR
FIRE PROTECTION PATRICK BAKAJ

DEPARTMENT OF THE NAVY
NAVAL FACILITIES ENGINEERING COMMAND ~ MID-ATLANTIC
PUBLIC WORKS DEPARTMENT - MAINE
NAVAL FACILITIES ENGINEERING COMMAND
NAVAL SHIPYARD - PORTSMOUTH, NH
PORTSMOUTH NAVAL SHIPYARD
KITTERY, ME
DRY DOCK #1 DEFUELING COMPLEX
M-140 COMPLEX
LEVEL 2 LIFE SAFETY PLAN

EPROJECT NO.: 1363311
CONSTR. CONTR. NO. N40085-17-C-5002
NAVFAC DRAWING NO. 12734803
SHEET 20 OF 188
LS-102A DD1-16-884

DRAWFORM REVISION: 10 OCTOBER 2014

10/28/2016 6:34:31 AM X:\297 PORTSMOUTH NAVAL SHIPYARD\297.005.001 - DD#1 DEFUELING COMPLEX DESIGN\DRAWINGS\M140\SHEETS\LS-102A.DWG

NOTES

1. SEE SHEET LS-001 FOR ABBREVIATIONS AND GENERAL NOTES.
2. SEE SHEET LS-101 IN THE SITE PACKAGE FOR A SITE-LEVEL LAYOUT OF THE M-140 COMPLEX AND PASSAGEWAYS.
3. TRAVEL DISTANCES SHOWN APPLY TO BOTH M-140 TOWER SECTIONS.

KEYED NOTES

1 INTERIOR EXIT ACCESS STAIRWAY

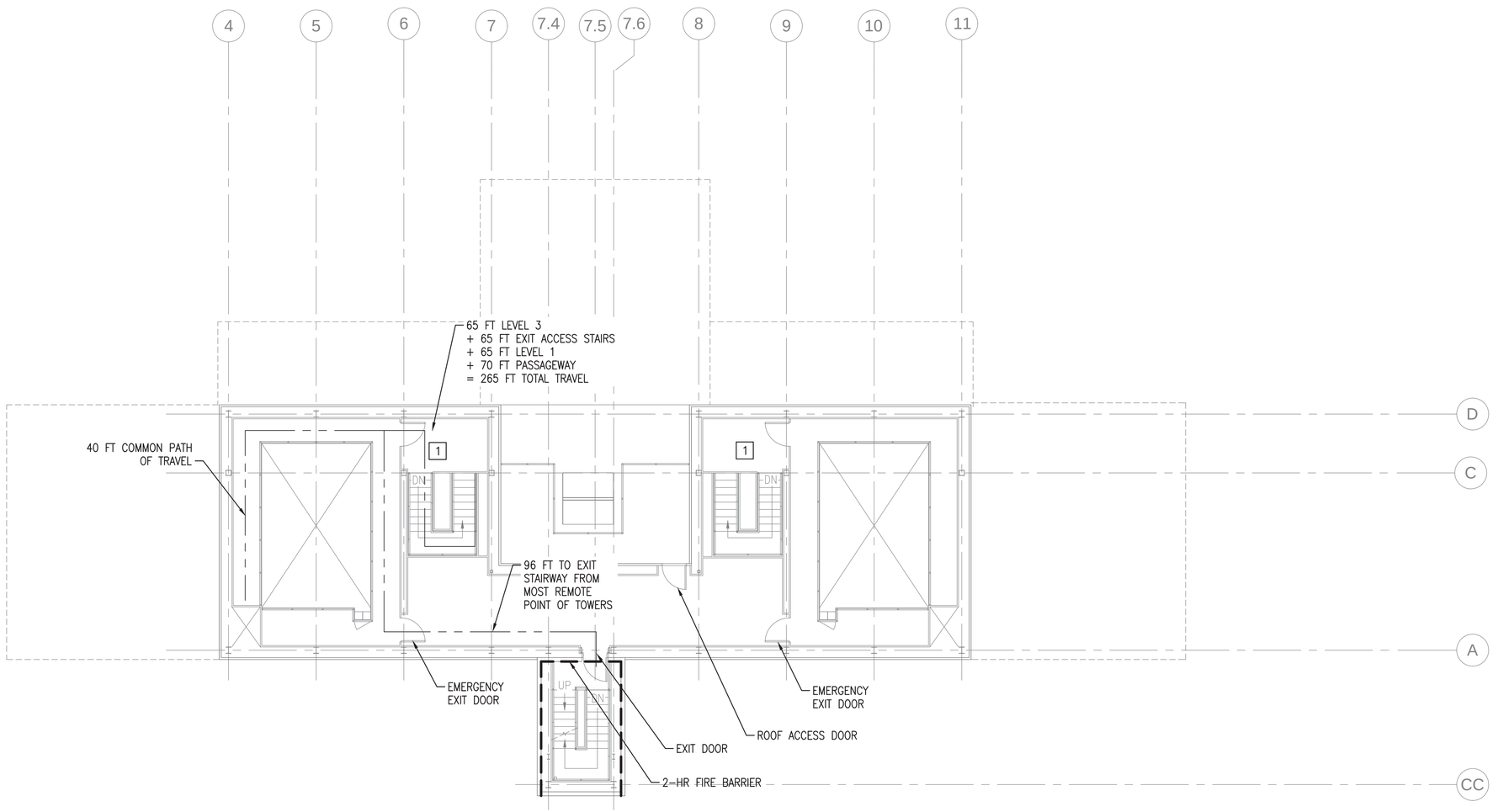

LEVEL 3 LIFE SAFETY PLAN

SCALE: 1/8" = 1'-0"

PLAN NORTH

0 4' 8' 16'
Scale: 1/8" = 1'-0"

SYM	DESCRIPTION	DATE	APPR
0	ISSUED FOR CONSTRUCTION	10/28/2016	CBC

NAVFAC

STATE OF MAINE
EMILY PINYARD
No. 12126
LICENSED
PROFESSIONAL ENGINEER
10/28/16
SEAL

Colby Company engineering
A/E INFO

APPROVED
David W. Thumfeld
FOR COMMANDER NAVFAC

ACTIVITY
TIM FISHER
C. 2370.6 BRANCH HEAD

SATISFACTORY TO | DATE 10/28/2016
DES ERP | DRW CSS | CHK WEP
PMDM PETER STOCKLESS
BRANCH MANAGER IAN BODWELL
FEAD/PM&E AMIN BAHROUR
FIRE PROTECTION PATRICK BAKAJ

DEPARTMENT OF THE NAVY
NAVAL FACILITIES ENGINEERING COMMAND
PUBLIC WORKS DEPARTMENT - MAINE

NAVAL FACILITIES ENGINEERING COMMAND ~ MID-ATLANTIC
NAVAL SHIPYARD - PORTSMOUTH, NH

PORTSMOUTH NAVAL SHIPYARD
KITTERY, ME

DRY DOCK #1 DEFUELING COMPLEX
M-140 COMPLEX

LEVEL 3 LIFE SAFETY PLAN

EPROJECT NO.: 1363311
CONSTR. CONTR. NO. N40085-17-C-5002
NAVFAC DRAWING NO. 12734804
SHEET 21 OF 188
LS-103 | DD1-16-885

DRAWFORM REVISION: 10 OCTOBER 2014

10/28/2016 6:34:35 AM X:\297 PORTSMOUTH NAVAL SHIPYARD\297.005.001 - DD#1 DEFUELING COMPLEX DESIGN\DRAWINGS\M140\SHEETS\LS-103.DWG

NOTES

1. SEE SHEET LS-001 FOR ABBREVIATIONS AND GENERAL NOTES.
2. SEE SHEET LS-101 IN THE SITE PACKAGE FOR A SITE-LEVEL LAYOUT OF THE M-140 COMPLEX AND PASSAGEWAYS.
3. TRAVEL DISTANCES SHOWN APPLY TO BOTH M-140 TOWER SECTIONS.

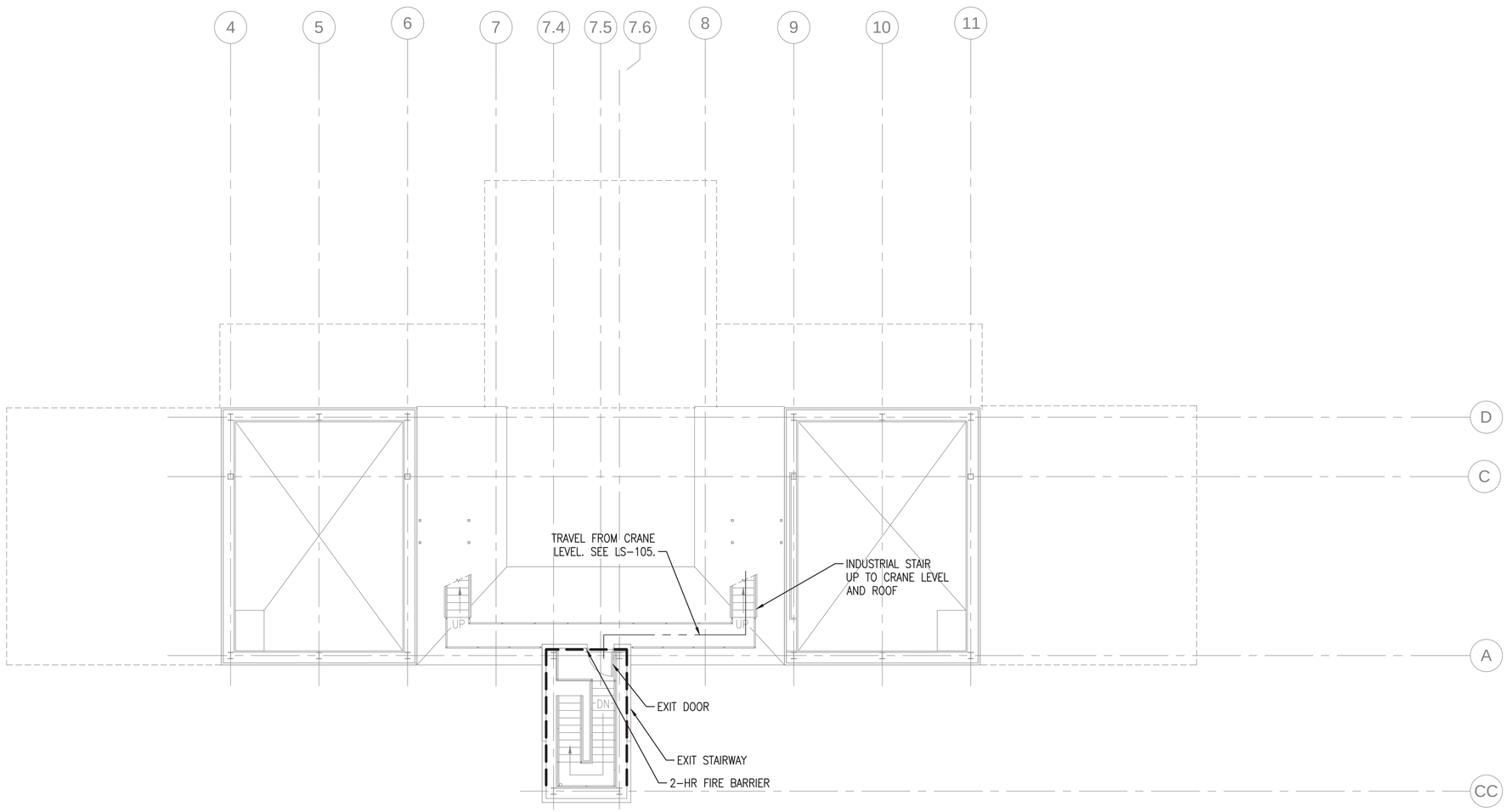

LEVEL 4 LIFE SAFETY PLAN

SCALE: 1/8" = 1'-0"

PLAN NORTH

0 4' 8' 16'
Scale: 1/8" = 1'-0"

SYM	DESCRIPTION	DATE	APPR
0	ISSUED FOR CONSTRUCTION	10/28/2016	CBC

NAVFAC

STATE OF MAINE
EMILY PINYARD
No. 12126
LICENSED
PROFESSIONAL ENGINEER
10/28/16
SEAL

Colby Company engineering
A/E INFO

APPROVED
David W. Thurnfield
FOR COMMANDER NAVFAC

ACTIVITY
TIM FISHER
C. 2370.6 BRANCH HEAD

SATISFACTORY TO DATE 10/28/2016

DES ERP DRW CSS CHK WEP

PM/CM	PETER STOCKLESS
BRANCH MANAGER	IAN BODWELL
FEAD/PM/E	AMIN BAHROUR
FIRE PROTECTION	PATRICK BAKAJ

DEPARTMENT OF THE NAVY
NAVAL FACILITIES ENGINEERING COMMAND
PUBLIC WORKS DEPARTMENT - MAINE

NAVAL FACILITIES ENGINEERING COMMAND ~ MID-ATLANTIC
NAVAL SHIPYARD - PORTSMOUTH, NH

PORTSMOUTH NAVAL SHIPYARD
KITTERY, ME

DRY DOCK #1 DEFUELING COMPLEX
M-140 COMPLEX

LEVEL 4 LIFE SAFETY PLAN

EPROJECT NO.: 1363311

CONSTR. CONTR. NO.
N40085-17-C-5002

NAVFAC DRAWING NO.
12734805

SHEET 22 OF 188

LS-104 | DD1-16-886

DRAWFORM REVISION: 10 OCTOBER 2014

10/28/2016 6:34:39 AM X:\297 PORTSMOUTH NAVAL SHIPYARD\297.005.001 - DD#1 DEFUELING COMPLEX DESIGN\DRAWINGS\M140\SHEETS\LS-104.DWG

NOTES

1. SEE SHEET LS-001 FOR ABBREVIATIONS AND GENERAL NOTES.
2. SEE SHEET LS-101 IN THE SITE PACKAGE FOR A SITE-LEVEL LAYOUT OF THE M-140 COMPLEX AND PASSAGEWAYS.
3. TRAVEL DISTANCES SHOWN APPLY TO BOTH M-140 TOWER SECTIONS.

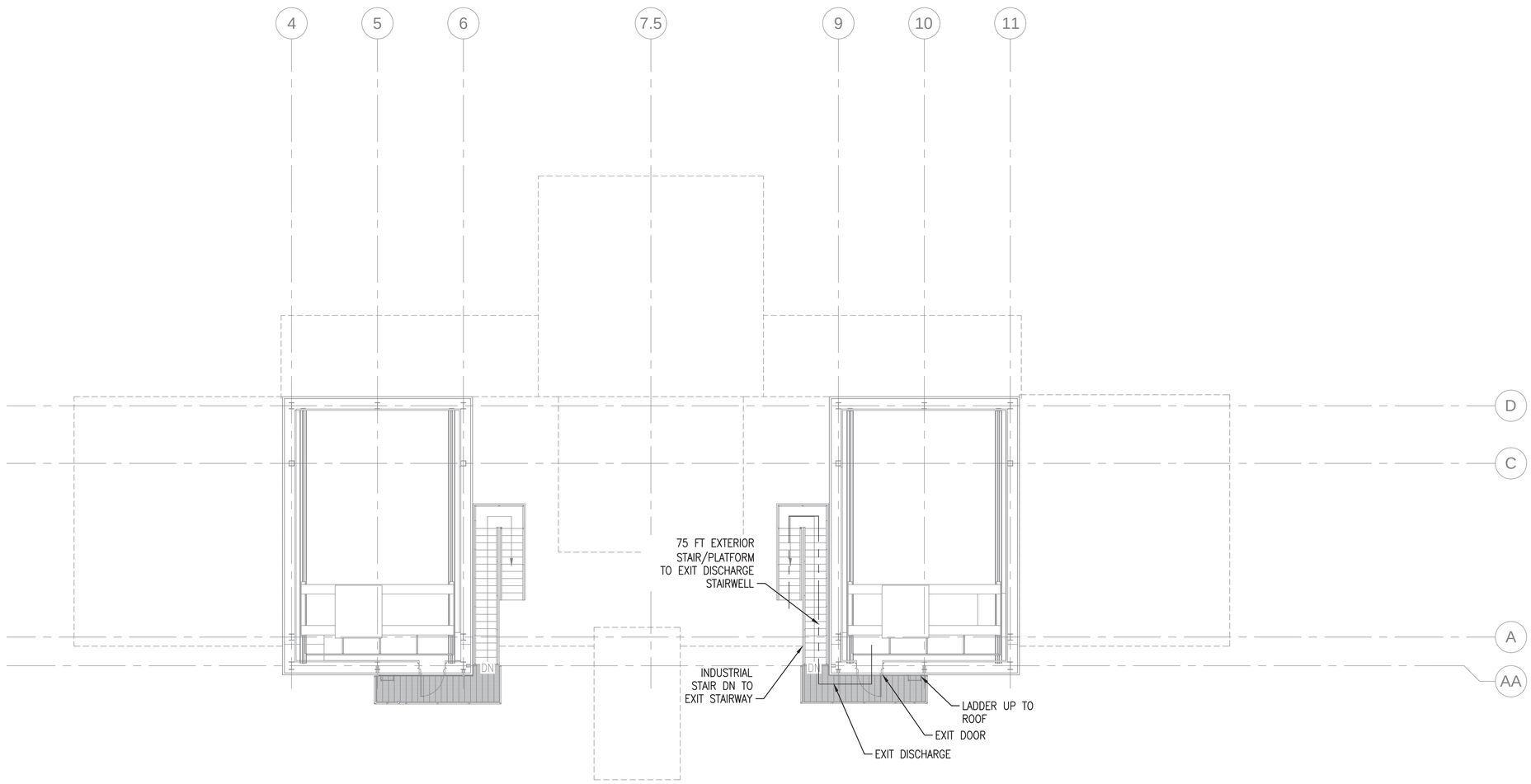

CRANE LEVEL LIFE SAFETY PLAN

SCALE: 1/8" = 1'-0"

PLAN NORTH

0 4' 8' 16'
Scale: 1/8" = 1'-0"

SYM	DESCRIPTION	DATE	APPR
0	ISSUED FOR CONSTRUCTION	10/28/2016	CBC

NAVFAC

STATE OF MAINE
EMILY PINYARD
No. 12126
LICENSED
PROFESSIONAL ENGINEER
10/28/16
SEAL

Colby Company engineering
A/E INFO

APPROVED
David W. Thurnfield
FOR COMMANDER NAVFAC

ACTIVITY
TIM FISHER
C. 2370.6 BRANCH HEAD

SATISFACTORY TO DATE 10/28/2016

DES ERP | DRW CSS | CHK WEP

PM/DM PETER STOCKLESS
BRANCH MANAGER IAN BODWELL
FEAD/PM&E AMIN BAHROUR
FIRE PROTECTION PATRICK BAKAJ

DEPARTMENT OF THE NAVY
NAVAL FACILITIES ENGINEERING COMMAND
PUBLIC WORKS DEPARTMENT - MAINE

NAVAL FACILITIES ENGINEERING COMMAND ~ MID-ATLANTIC
NAVAL SHIPYARD - PORTSMOUTH, NH

PORTSMOUTH NAVAL SHIPYARD
KITTERY, ME

DRY DOCK #1 DEFUELING COMPLEX
M-140 COMPLEX

CRANE LEVEL LIFE SAFETY PLAN

EPROJECT NO.: 1363311

CONSTR. CONTR. NO.
N40085-17-C-5002

NAVFAC DRAWING NO.
12734806

SHEET 23 OF 188

LS-105 | DD1-16-887

DRAWFORM REVISION: 10 OCTOBER 2014

10/28/2016 6:34:43 AM X:\297 PORTSMOUTH NAVAL SHIPYARD\297.005.001 - DD#1 DEFUELING COMPLEX DESIGN\DRAWINGS\M140\SHEETS\LS-105.DWG

ABBREVIATIONS

AFF	ABOVE FINISH FLOOR	SHT.	SHEET
APPROX.	APPROXIMATELY	SIM.	SIMILAR
ARCH	ARCHITECTURAL	SP	SPACE
℄	BUILDING LINE	SPEC.	SPECIFICATION
BLDG.	BUILDING	SQ.	SQUARE
BOT.	BOTTOM	STD	STANDARD
B.O.	BOTTOM OF	STIFF	STIFFENER
℄	CENTER LINE	T.O.	TOP OF
C.J.	CONTROL JOINT	T.O.S.	TOP OF STEEL
CLR	CLEAR	THRU	THROUGH
CP	COLUMN PLATE	TYP.	TYPICAL
COL.	COLUMN	U.N.O.	UNLESS NOTED OTHERWISE
CONC	CONCRETE	VERT.	VERTICAL
CONN	CONNECTION	W/	WITH
CONT.	CONTINUOUS	W.P.	WORK POINT
DBL.	DOUBLE	WWF	WELDED WIRE FABRIC
DTL.	DETAIL		
DIA., ø	DIAMETER		
DIM.	DIMENSION		
DN	DOWN		
DWG.	DRAWING		
EA.	EACH		
EMBED	EMBEDMENT		
EL.	ELEVATION		
EOD	EDGE OF DECK		
EQ.	EQUAL		
EQUIP.	EQUIPMENT		
EXIST.	EXISTING		
EXT.	EXTERIOR		
FDN	FOUNDATION		
FFE	FINISH FLOOR ELEVATION		
FIN.	FINISH		
FLR.	FLOOR		
F.S.	FAR SIDE		
FT	FEET		
GA.	GAGE		
GALV.	GALVANIZED		
GEN.	GENERAL		
GR	GRADE		
HORIZ.	HORIZONTAL		
HT.	HEIGHT		
I.D.	INSIDE DIAMETER		
IN.	INCH		
INT.	INTERIOR		
LB	POUNDS		
LG	LONG		
MANUF.	MANUFACTURER		
MAX.	MAXIMUM		
MECH.	MECHANICAL		
MIN.	MINIMUM		
N.S.	NEAR SIDE		
NTS	NOT TO SCALE		
O.C.	ON CENTER		
O.D.	OUTSIDE DIAMETER		
PL	PLATE		
R, RAD.	RADIUS		
REF	REFERENCE		
REQ'D, REQ.	REQUIRED		
S.S.	STAINLESS STEEL		
SCH.	SCHEDULE		
SECT.	SECTION		

GENERAL NOTES

DESIGN LOADING (2012 IBC/UFC 3-301-01):

SNOW LOADS

GROUND SNOW LOAD, Pg:	50 PSF
EXPOSURE FACTOR, Ce:	0.9
THERMAL FACTOR, Ct:	1.1
IMPORTANCE FACTOR, I:	1.2
ROOF SNOW LOAD, Pf:	42 PSF

WIND LOADS

ULTIMATE WIND SPEED:	132 MPH
EXPOSURE:	C
RISK CATEGORY:	II**
INTERNAL PRESSURE COEFFICIENT	GCpi = ±0.18
C & C WALL LOADS:	+ 63.8/−114.7 PSF WITHIN 3' OF EDGE + 63.8/−64.8 PSF @ FIELD

SEISMIC LOADS

SITE CLASSIFICATION:	A
SEISMIC DESIGN CATEGORY:	A
RISK CATEGORY	II**
SEISMIC IMPORTANCE FACTOR:	1.5
0.2 SEC. SPECTRAL RESPONSE, Ss:	0.27g
1 SEC. SPECTRAL RESPONSE, S1:	0.08g
SEISMIC RESISTING SYSTEM:	STEEL SYSTEMS NOT SPECIFICALLY DETAILED FOR SEISMIC RESISTANCE (BRACED FRAME)
RESPONSE MODIFICATION FACTOR, R:	3.0
SEISMIC RESPONSE COEFFICIENT, Cs:	0.01
DESIGN BASE SHEAR:	4.86K
SEISMIC ANALYSIS PROCEDURE:	EQUIVALENT LATERAL FORCE PROCEDURE

** PER IBC & ASCE-7, RISK CATEGORY OF DEFUELING FACILITY HAS BEEN SET AT II, AS A CONSERVATIVE MEASURE THE BUILDING DESIGN HAS ASSUMED A RISK CATEGORY OF IV.

EXTERIOR PLATFORMS

EXTERIOR METAL STAIRS LIVE LOAD	100 PSF
ELEVATED PLATFORM LIVE LOAD	100 PSF
SNOW LOAD	50 PSF
INTERIOR FLOORS	125 PSF AND 10,000lb POINT LOAD FOR AIR CASTER, VARIOUS LOCATIONS ON LEVEL 1 ONLY

INTERIOR SLAB LOADS

SLAB LIVE LOAD	125 PSF EXCEPT AT JACKING LOCATIONS
JACKING PADS (24" SQ.)	160 KIPS EACH
JACK STAND PADS (36" SQ.)	300 KIPS EACH
DEMINERALIZERS	33 KIPS EACH (4 TOTAL)

1. THE NOTES ON THESE DRAWINGS ARE NOT INTENDED TO REPLACE SPECIFICATIONS. SEE SPECIFICATIONS FOR REQUIREMENTS IN ADDITION TO GENERAL NOTES. INCONSISTENCIES BETWEEN THESE DRAWINGS AND THE SPECIFICATIONS SHALL BE BROUGHT TO THE ATTENTION OF THE GOVERNMENT FOR RESOLUTION PRIOR TO PROCEEDING WITH THE AFFECTED PORTION OF THE WORK.

2. STRUCTURAL DRAWINGS SHALL BE USED IN CONJUNCTION WITH JOB SPECIFICATIONS AND ARCHITECTURAL, STRUCTURAL, MECHANICAL, ELECTRICAL, PLUMBING, SITE DRAWINGS & GEOTECHNICAL SPECIFICATIONS. CONSULT THESE DRAWINGS FOR LOCATIONS AND DIMENSIONS OF OPENINGS, CHASES, INSERTS, REGLETS, SLEEVES, DEPRESSIONS, AND OTHER DETAILS NOT SHOWN ON STRUCTURAL DRAWINGS.

3. ALL DIMENSIONS AND CONDITIONS SHALL BE VERIFIED IN THE FIELD. ANY DISCREPANCIES SHALL BE BROUGHT TO THE ATTENTION OF NAVFAC, THE GOVERNMENT FOR RESOLUTION BEFORE PROCEEDING WITH THE AFFECTED PART OF THE WORK.

GENERAL NOTES (CONT)

4. THE STRUCTURE IS DESIGNED TO BE SELF SUPPORTING AND STABLE ONLY AFTER THE STRUCTURAL WORK CONTAINED IN THE DRAWINGS IS COMPLETED. IT IS THE CONTRACTOR'S SOLE RESPONSIBILITY TO DETERMINE ERECTION PROCEDURES AND SEQUENCE TO ENSURE THE SAFETY OF THE BUILDING AND ITS COMPONENTS DURING ERECTION. THIS INCLUDES THE ADDITION OF NECESSARY SHORING, SHEETING, TEMPORARY BRACING, GUYS OR TIEDOWNS. SUCH MATERIAL SHALL REMAIN THE PROPERTY OF THE CONTRACTOR AFTER COMPLETION OF THE PROJECT.

5. SECTIONS AND DETAILS SHOWN ON ANY STRUCTURAL DRAWINGS SHALL BE CONSIDERED TYPICAL FOR SIMILAR CONDITIONS.

6. THE CONTRACTOR SHALL SUBMIT COMPLETE SHOP DRAWINGS FOR ALL PARTS OF THE WORK, INCLUDING DESCRIPTION OF SHORING, AND CONSTRUCTION METHODS AND SEQUENCING WHERE APPLICABLE. NO PERFORMANCE OF THE WORK, SHALL COMMENCE WITHOUT REVIEW AND APPROVAL OF THE SHOP DRAWINGS BY NAVFAC, AND THE GOVERNMENT. THE CONTRACTOR SHALL INDICATE ON THE SHOP DRAWINGS WHICH PORTIONS OF THE WORK ARE TO BE PERFORMED OFF SITE AND WHICH PORTIONS WILL BE PERFORMED AT THE SITE.

7. ALL APPLICABLE FEDERAL, STATE, AND MUNICIPAL REGULATIONS SHALL BE FOLLOWED, INCLUDING THE FEDERAL DEPARTMENT OF LABOR OCCUPATIONAL SAFETY AND HEALTH ADMINISTRATION.

8. REFER TO SPECIFICATIONS FOR REQUIRED STRUCTURAL TESTS AND SPECIAL INSPECTIONS.

9. DATUM TOP OF SLAB, ELEVATION 9'-7" = MODULE ELEVATION 0'-0".

COLD FORMED LIGHT GAUGE STEEL FRAMING

1. COLD FORMED STEEL FRAMING MEMBERS SHALL BE OF THE TYPE, SHAPE, SIZE, GAUGE, AND SPACING AS SHOWN ON THE DRAWINGS. MEMBER TYPES AND SIZES SHOWN ON THE DRAWINGS REFER TO MEMBERS MANUFACTURED BY THE DIETRICH INDUSTRIES, INC. MEMBERS EQUIVALENT IN SHAPE, SIZE, STIFFNESS, AND STRENGTH BY OTHER MANUFACTURERS MAY BE SUBSTITUTED FOR FRAMING MEMBERS SHOWN. ALTERNATE MEMBERS SHALL BE SUBJECT TO REVIEW AND APPROVAL BY NAVFAC AND THE GOVERNMENT PRIOR TO FABRICATION AND ERECTION.

2. ALL COLD FORMED STEEL FRAMING SHALL CONFORM TO THE ANSI SPECIFICATION FOR THE DESIGN OF COLD-FORMED STRUCTURAL MEMBERS.

3. COLD FORMED STRUCTURAL TRACKS AND STUDS 12, 14 AND 16 GAUGE MATERIALS SHALL BE FORMED WITH ASTM A446, GRADE D OR ASTM A570, GRADE 50 STEEL WITH A MINIMUM FY=50 KSI. COLD-FORMED STRUCTURAL TRACKS AND STUDS 18 GAUGE AND LIGHTER SHALL BE FORMED FROM ASTM A446, GRADE A OR ASTM A570, GRADE 33 GALVANIZED. FASTENINGS SHALL BE AS SHOWN ON THE DRAWINGS. FASTENINGS NOT SHOWN SHALL BE AS RECOMMENDED BY THE MANUFACTURER.

4. SHEET STEEL SHALL BE AS FOLLOWS:
   a. JOISTS, GIRTS — ASTM A1003/A1003A STRUCTURAL QUALITY, Fy=50ksi, G60 GALVANIZING

5. CONTRACTOR SHALL PROVIDE STANDARD STEEL BLOCKING, BRIDGING, CLIP ANGLES, REINFORCEMENTS AND ACCESSORIES. ACCESSORIES SHALL BE AS RECOMMENDED BY FRAMING MANUFACTURER FOR APPLICATIONS INDICATED AND AS REQUIRED TO PROVIDE A COMPLETE FRAMING SYSTEM.

6. JOINTS SHALL UTILIZE ASTM A325 BOLTS OR ASTM C1513 SELF TAPPING SCREWS, SIZED TO SUIT APPLICATION AND LOADS INDICATED.

7. WELDING ELECTRODES SHALL COMPLY WITH AWS STANDARDS, AND ALL WELD PROCEDURES SHALL BE ACCOMPLISHED IN ACCORDANCE WITH AWS D1.3.

8. USE ZINC RICH PAINT PER ASTM A780 FOR TOUCH UP AND REPAIR OF GALVANIZED SURFACES.

CRANE RAIL DESIGN

1. COMPLY WITH SPEC 05-12-00

2. RAIL ALIGNMENT AND LEVELNESS SHALL COMPLY WITH SPECIFICATION SECTION 05 12 00 AND 05 59 10.

3. CRANE RAIL DESIGN LOADS (NOT INCLUDING IMPACT):

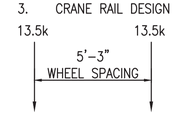

STRUCTURAL STEEL NOTES

1. STRUCTURAL STEEL FABRICATION, ERECTION, AND CONNECTION DESIGN SHALL CONFORM TO AISC'S "SPECIFICATION FOR THE DESIGN, FABRICATION, AND ERECTION OF STRUCTURAL STEEL" 14th EDITION. STEEL FABRICATION AND ERECTION SHALL CONFORM TO AISC "CODE OF STANDARD PRACTICE FOR STEEL BUILDINGS AND BRIDGES" AISC-303

2. STRUCTURAL STEEL SHALL CONFORM TO THE FOLLOWING:

a. WIDE FLANGE SHAPES	ASTM A992
b. CHANNELS @ CRANE RUNWAY	ASTM A572, GRADE 50
c. PLATES AND OTHER SHAPES	ASTM A36
d. SQUARE & RECTANGULAR TUBING	ASTM A500, GRADE B
e. ROUND PIPES AND TUBING	ASTM A53, GRADE B
f. ANCHOR RODS	ASTM F1554, GRADE 36
g. HEADED STUDS	ASTM A108
h. CRANE RAILS	ASTM A759
i. ROLLED FLOOR PLATE	ASTM A756 OR A36

3. FIELD CONNECTIONS SHALL BE BOLTED USING ASTM A325 OR A490 HIGH STRENGTH BOLTS, UNLESS NOTED OTHERWISE.

4. BOLTS ARE BEARING TYPE AND MAY BE EITHER SNUG TIGHTENED OR FULLY TENSIONED. BOLT HOLES SHALL BE STANDARD SIZES UNLESS OTHERWISE APPROVED BY THE ENGINEER OF RECORD.

5. WELDING SHALL CONFORM TO AWS D1.1. WELDING ELECTRODES SHALL COMPLY WITH AWS REQUIREMENTS.

6. THE DESIGN OF CONNECTIONS NOT SHOWN ON THE DRAWINGS SHALL BE PROVIDED BY THE FABRICATOR. CONNECTIONS SHALL BE DESIGNED FOR THE FORCES SHOWN. CONNECTIONS SHALL BE DESIGNED IN ACCORDANCE WITH AISC MANUAL OF STEEL CONSTRUCTION 14TH EDITION. DESIGN CALCULATIONS SHALL BE PREPARED BY A PROFESSIONAL ENGINEER REGISTERED IN THE STATE OF MAINE. SUBMIT SEALED CALCULATIONS WITH SHOP DRAWINGS.

7. ALL STEEL SHALL BE FABRICATED AND SHIPPED AS SHOP PRIMED & PAINTED STEEL UNLESS NOTED OTHERWISE.

8. STEEL MEMBERS SHALL BE CUT FROM FULL LENGTH STOCK. UNAUTHORIZED SPLICES WILL BE CAUSE FOR REJECTION.

9. GUARDRAIL SHALL BE CONTINUOUS AND SHALL MEET OSHA REQUIREMENTS. GUARDRAIL MAY NOT BE SHOWN AS CONTINUOUS FOR GRAPHICAL REPRESENTATION PURPOSES.

10. BEAM END FORCES:

10.1 MINIMUM SHEAR FORCES (UNLESS NOTED OTHERWISE):

W10 – 20 KIPS	C6 – 10 KIPS	HSS4x4 – 5 KIPS
W12 – 25 KIPS	C8 – 15 KIPS	HSS6x4 – 10 KIPS
W16 – 40 KIPS	C10 – 20 KIPS	HSS20x4 – 40 KIPS
W14 – 28 KIPS	C15 – 35 KIPS	
W18 – 55KIPS		
W24 – 94 KIPS		

10.2 MINIMUM AXIAL FORCES (UNLESS NOTED OTHERWISE):
ALL END CONNECTIONS SHALL BE CAPABLE OF RESISTING AN AXIAL FORCE OF 5 KIPS IN BOTH TENSION AND COMPRESSION. THIS SHALL BE IN COMBINATION WITH OTHER FORCES LISTED HERE AND POSTED ON THE DRAWINGS.

10.3 MINIMUM HORIZONTAL FORCES (UNLESS NOTED OTHERWISE):
ALL END CONNECTIONS (EXCEPT HORIZONTAL AND VERTICAL BRACING) SHALL BE CAPABLE OF RESISTING A HORIZONTAL/OUT-OF-PLANE/TRANVERSE FORCE OF 5 KIPS IN COMBINATION WITH OTHER FORCES LISTED HERE AND POSTED ON THE DRAWINGS.

10.4 XXX KIPS DENOTES AN AXIAL TRANSFER FORCE. TRANSFER FORCES SHALL BE CONSIDERED REVERSIBLE AND ARE IN ADDITION TO OTHER FORCES LISTED HERE.

10.5 ALL LOADS GIVEN ABOVE AND POSTED ON THE DRAWINGS ARE UNFACTORED (ASD).

METAL GRATING NOTES

1. GALVANIZED STEEL GRATING BEARING BARS SHALL CONFORM TO ASTM 569. CROSS BARS SHALL BE OF ASTM A510 CARBON STEEL RODS. HOT DIPPED GALVANIZING SHALL BE IN ACCORDANCE WITH ASTM A123.

2. GRATING SHALL BE INSTALLED USING THE WIDEST MANAGEABLE PANEL SECTIONS POSSIBLE, BUT NO LESS THAN 24" WIDE PANELS.

3. ALL OPENINGS IN GRATING LARGER THAN 6" SHALL BE BANDED.

4. UNLESS NOTED OTHERWISE, GRATING SHALL BE SECURELY FASTENED TO THE STRUCTURAL SUPPORTS BY SELF DRILLING/SELF TAPPING SCREWS w/ PRE-DRILLED HOLES. FASTENER LOCATIONS SHALL BE TOUCH-UP PAINTED OR COLD GALVANIZED AS REQUIRED.

SYM	DESCRIPTION	DATE	APPR
0	ISSUED FOR CONSTRUCTION	10/28/2016	CBC

NAVFAC

STATE OF MAINE — SAMUEL J. THOMAS — LICENSED PROFESSIONAL ENGINEER — 10/28/16 — SEAL

Colby Company engineering — A/E INFO

APPROVED BY: David W. Trumfield — FOR COMMANDER NAVFAC

ACTIVITY: TIM FISHER, C. 2370.6 BRANCH HEAD

SATISFACTORY TO — DATE 10/28/2016

DES SJT | DRW ERB | CHK CBC

PMDM: PETER STOCKLESS

BRANCH MANAGER: IAN BODWELL

FEA/PM&E: AMIN BAHROUR

FIRE PROTECTION: PATRICK BAKAJ

DEPARTMENT OF THE NAVY — NAVAL FACILITIES ENGINEERING COMMAND — PUBLIC WORKS DEPARTMENT - MAINE

NAVAL FACILITIES ENGINEERING COMMAND ~ MID-ATLANTIC — NAVAL SHIPYARD: PORTSMOUTH, NH

PORTSMOUTH NAVAL SHIPYARD — KITTERY, ME

DRY DOCK #1 DEFUELING COMPLEX
M-140 COMPLEX

STRUCTURAL GENERAL NOTES SHEET

EPROJECT NO.: 1363311

CONSTR. CONTR. NO. N40085-17-C-5002

NAVFAC DRAWING NO. 12734807

SHEET 24 OF 188

S-001 | DD1-16-888

DRAWFORM REVISION: 10 OCTOBER 2014

10/28/2016 6:34:46 AM X:\297 PORTSMOUTH NAVAL SHIPYARD\297.005.001 - DD#1 DEFUELING COMPLEX DESIGN\DRAWINGS\M140\SHEETS\S-001.DWG

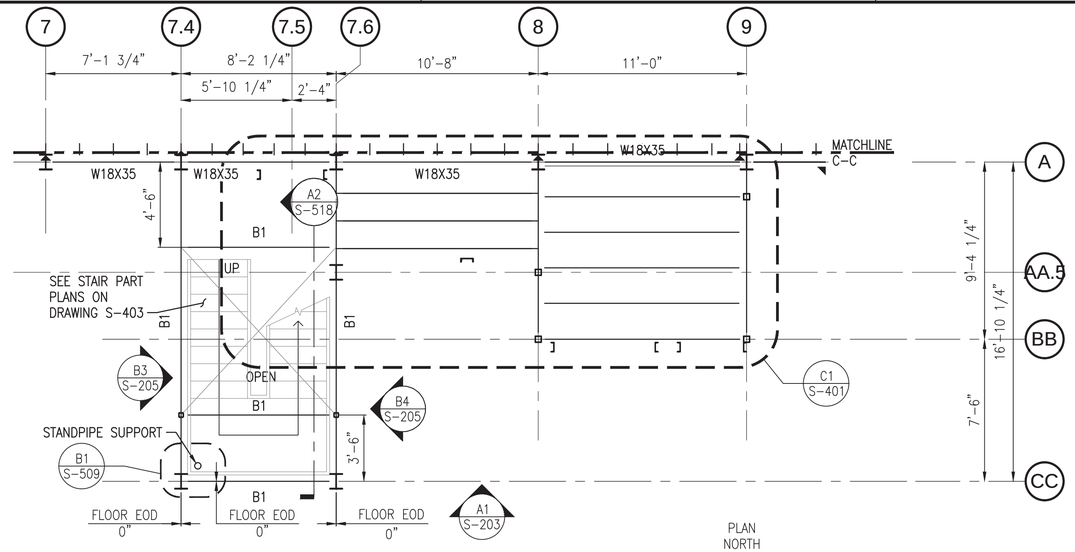

ENTRYWAY AT STAIR TOWER - LEVEL 1

SCALE: 1/4" = 1'-0"

T.O.S. EL. 15'-3 7/8" U.N.O.

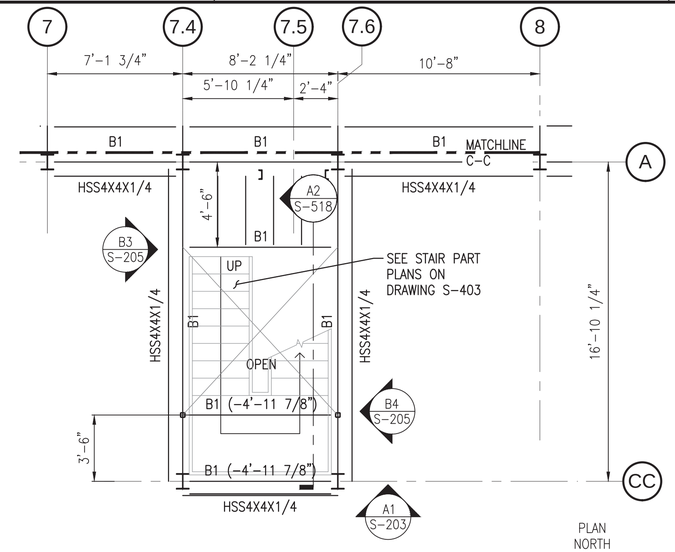

ENTRYWAY AT STAIR TOWER - LEVEL 2

SCALE: 1/4" = 1'-0"

T.O.S. EL. 25'-3 7/8" U.N.O.

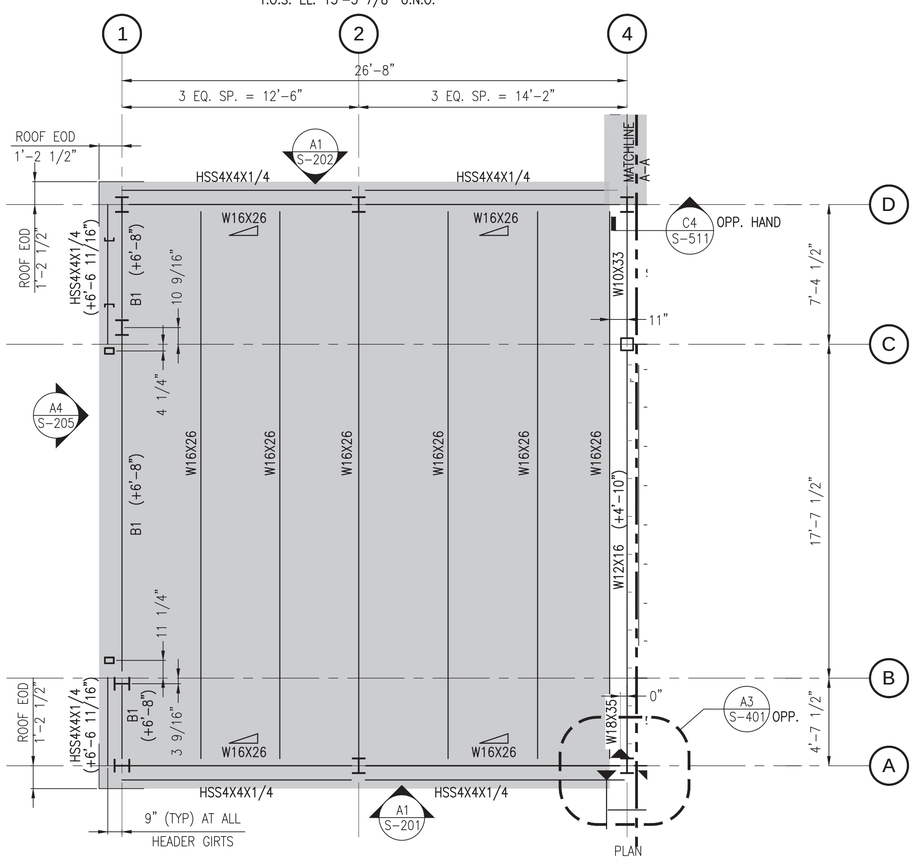

WEST RAILCAR ENCLOSURE - LEVEL 1

SCALE: 1/4" = 1'-0"

T.O.S. EL. 15'-3 7/8" U.N.O.

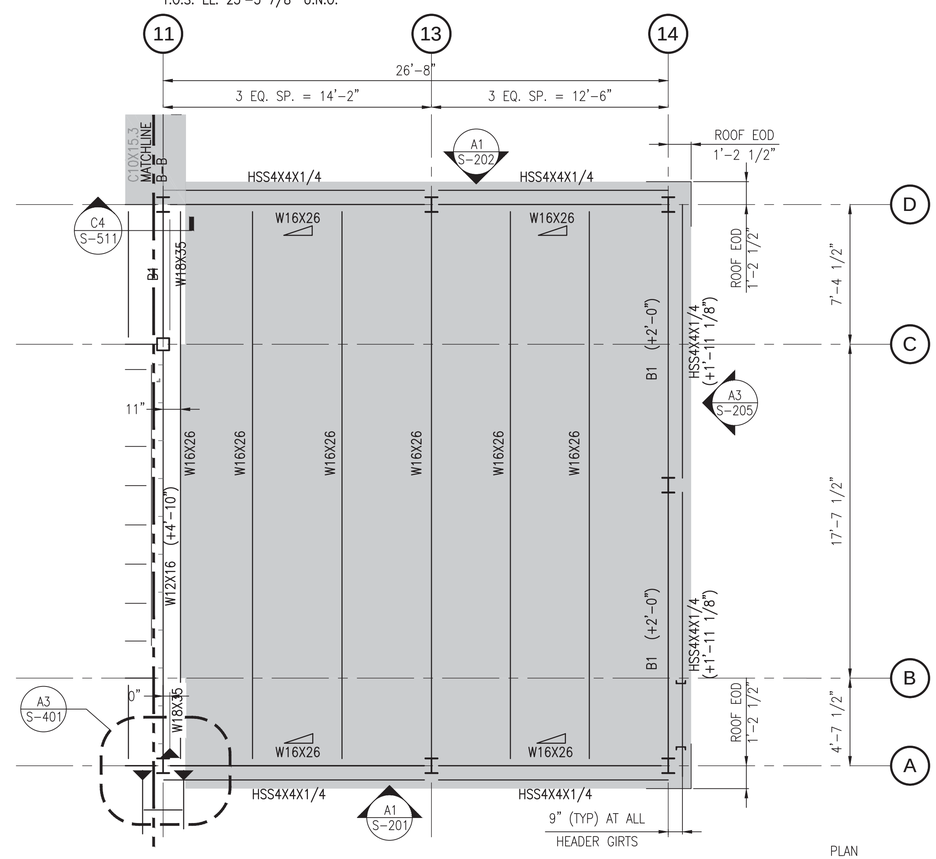

EAST RAILCAR ENCLOSURE - LEVEL 1

SCALE: 1/4" = 1'-0"

T.O.S. EL. 15'-3 7/8" U.N.O.

0 2' 4' 8'
Scale: 1/4" = 1'-0"

NOTES

1. SEE S-001 FOR ADDITIONAL NOTES

FRAMING LEGEND

DENOTES 1/4" STEEL PLATE WELDED TO COLD FORMED OR HOT ROLLED STEEL STRUCTURE WITH 1/8" HD LINOLEUM FLOORING.

DENOTES 1/4" STEEL PLATE WITH SEAM WELDED TO ADJACENT PLATES, INTERMITTENT WELDS TO STRUCTURE BELOW EXCEPT SEAM WELDED WHERE REQUIRED FOR WEATHER RESISTANCE.

B1 DENOTES W10x12
J2 DENOTES 800S200-54
J3 DENOTES 1000S200-97
J4 DENOTES 1000S250-68
J5 DENOTES 1000S250-97
J6 DENOTES 1200S250-97
J7 DENOTES 1200S350-118

( ) DENOTES STEEL ELEVATION DIFFERENCE FROM T.O.S. REF. IN PLAN TITLE

DENOTES MOMENT CONNECTION

DENOTES SLOPED MEMBER

SYM	DESCRIPTION	DATE	APPR
0	ISSUED FOR CONSTRUCTION	10/28/2016	CBC

NAVFAC

STATE OF MAINE SAMUEL J. THOMAS No. 13311 LICENSED PROFESSIONAL ENGINEER 10/28/16

Colby Company engineering

A/E INFO

APPROVED
David W. Trumfield
FOR COMMANDER NAVFAC

ACTIVITY
TIM FISHER
C. 2370.6 BRANCH HEAD

SATISFACTORY TO DATE 10/28/2016

DES SJT | DRW ERB | CHK CBC

PMDM PETER STOCKLESS
BRANCH MANAGER IAN BODWELL
FEA/PM&E AMIN BAHROUR
FIRE PROTECTION PATRICK BAKAJ

DEPARTMENT OF THE NAVY
NAVAL FACILITIES ENGINEERING COMMAND
PUBLIC WORKS DEPARTMENT - MAINE

NAVAL FACILITIES ENGINEERING COMMAND ~ MID-ATLANTIC
NAVAL SHIPYARD: PORTSMOUTH, NH

PORTSMOUTH NAVAL SHIPYARD
KITTERY, ME

DRY DOCK #1 DEFUELING COMPLEX
M-140 COMPLEX

FRAMING PART PLANS – RAILCAR ENCLOSURES

EPROJECT NO.: 1363311

CONSTR. CONTR. NO. N40085-17-C-5002

NAVFAC DRAWING NO. 12734808

SHEET 25 OF 188

S-100 | DD1-16-889

DRAWFORM REVISION: 10 OCTOBER 2014

10/28/2016 6:34:52 AM X:\297 PORTSMOUTH NAVAL SHIPYARD\297.005.001 - DD#1 DEFUELING COMPLEX DESIGN\DRAWINGS\M140\SHEETS\S-100.DWG

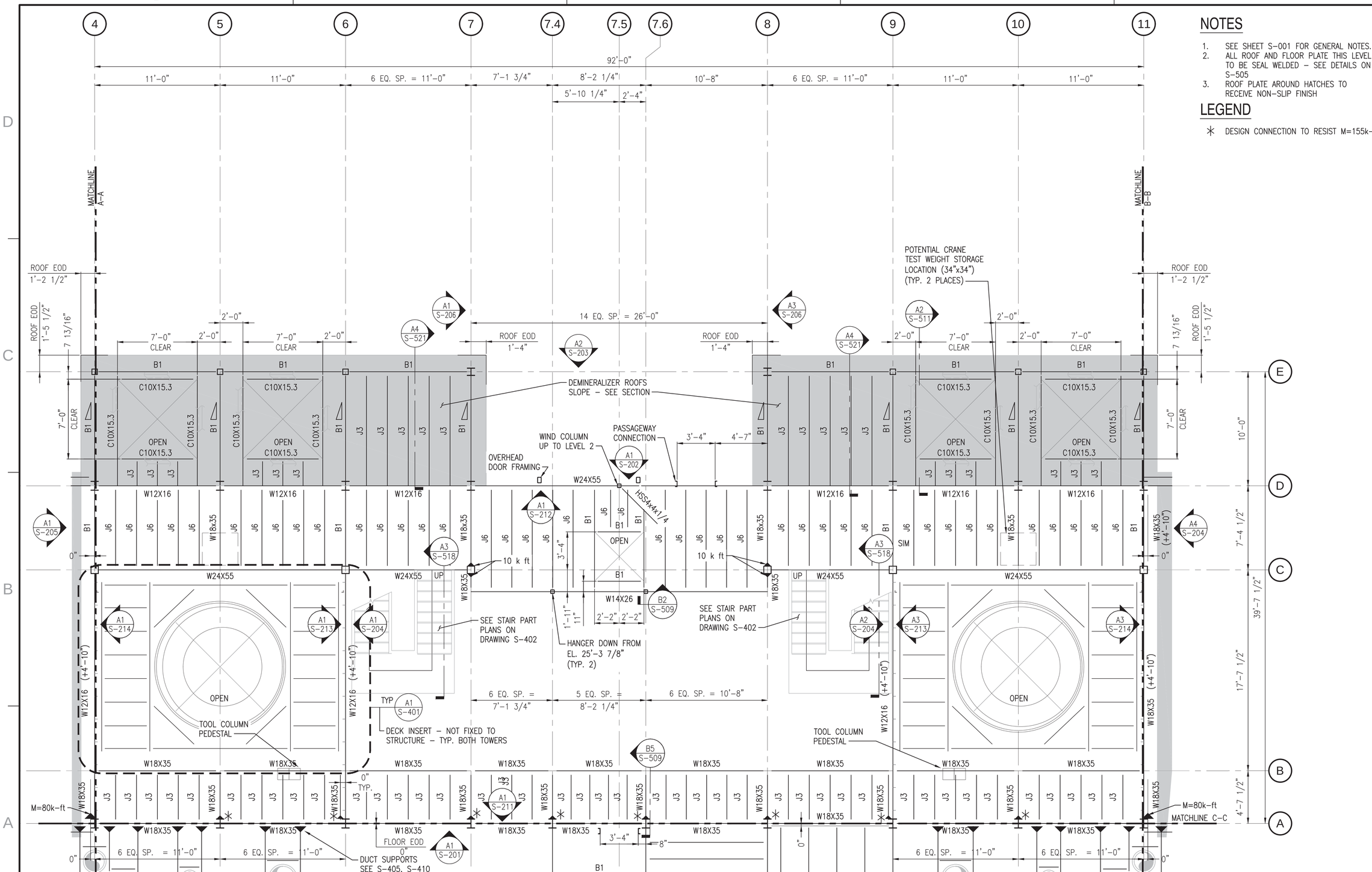

FRAMING PLAN LEVEL 1 (NO STORAGE ENCLOSURE)

SCALE: 1/4" = 1'-0"

T.O.S. EL. 15'-3 7/8" U.N.O.

NOTES

1. SEE SHEET S-001 FOR GENERAL NOTES.
2. ALL ROOF AND FLOOR PLATE THIS LEVEL TO BE SEAL WELDED - SEE DETAILS ON S-505
3. ROOF PLATE AROUND HATCHES TO RECEIVE NON-SLIP FINISH

LEGEND

✳ DESIGN CONNECTION TO RESIST M=155k-ft

SYM	DESCRIPTION	DATE	APPR
0	ISSUED FOR CONSTRUCTION	10/28/2016	CBC

NAVFAC

STATE OF MAINE SAMUEL J. THOMAS No. 13311 LICENSED PROFESSIONAL ENGINEER 10/28/16

Colby Company engineering

APPROVED
David W. Thurnfeld
FOR COMMANDER NAVFAC

ACTIVITY
TIM FISHER
C. 2370.6 BRANCH HEAD

SATISFACTORY TO DATE 10/28/2016

DES SJT	DRW ERB	CHK CBC	
PMDM	PETER STOCKLESS		
BRANCH MANAGER	IAN BODWELL		
FEAD/PM&E	AMIN BAHROUR		
FIRE PROTECTION	PATRICK BAKAJ		

DEPARTMENT OF THE NAVY
NAVAL FACILITIES ENGINEERING COMMAND
PUBLIC WORKS DEPARTMENT - MAINE

NAVAL FACILITIES ENGINEERING COMMAND ~ MID-ATLANTIC
NAVAL SHIPYARD - PORTSMOUTH, NH

PORTSMOUTH NAVAL SHIPYARD
KITTERY, ME

DRY DOCK #1 DEFUELING COMPLEX
M-140 COMPLEX

FRAMING PLAN LEVEL 1 (NO STORAGE ENCLOSURE)

EPROJECT NO.: 1363311

CONSTR. CONTR. NO. N40085-17-C-5002

NAVFAC DRAWING NO. 12734809

SHEET 26 OF 188

S-101 | DD1-16-890

DRAWFORM REVISION: 10 OCTOBER 2014

10/28/2016 7:52:38 AM X:\297 PORTSMOUTH NAVAL SHIPYARD\297.005.001 - DD#1 DEFUELING COMPLEX DESIGN\DRAWINGS\M140\SHEETS\S-101.DWG

NOTES

1. SEE SHEET S-001 FOR GENERAL NOTES.
2. ALL ROOF AND FLOOR PLATE THIS LEVEL TO BE SEAL WELDED – SEE DETAILS ON S-505
3. ROOF PLATE AROUND HATCHES TO RECEIVE NON-SLIP FINISH

LEGEND

✳ DESIGN CONNECTION TO RESIST M=155k-ft

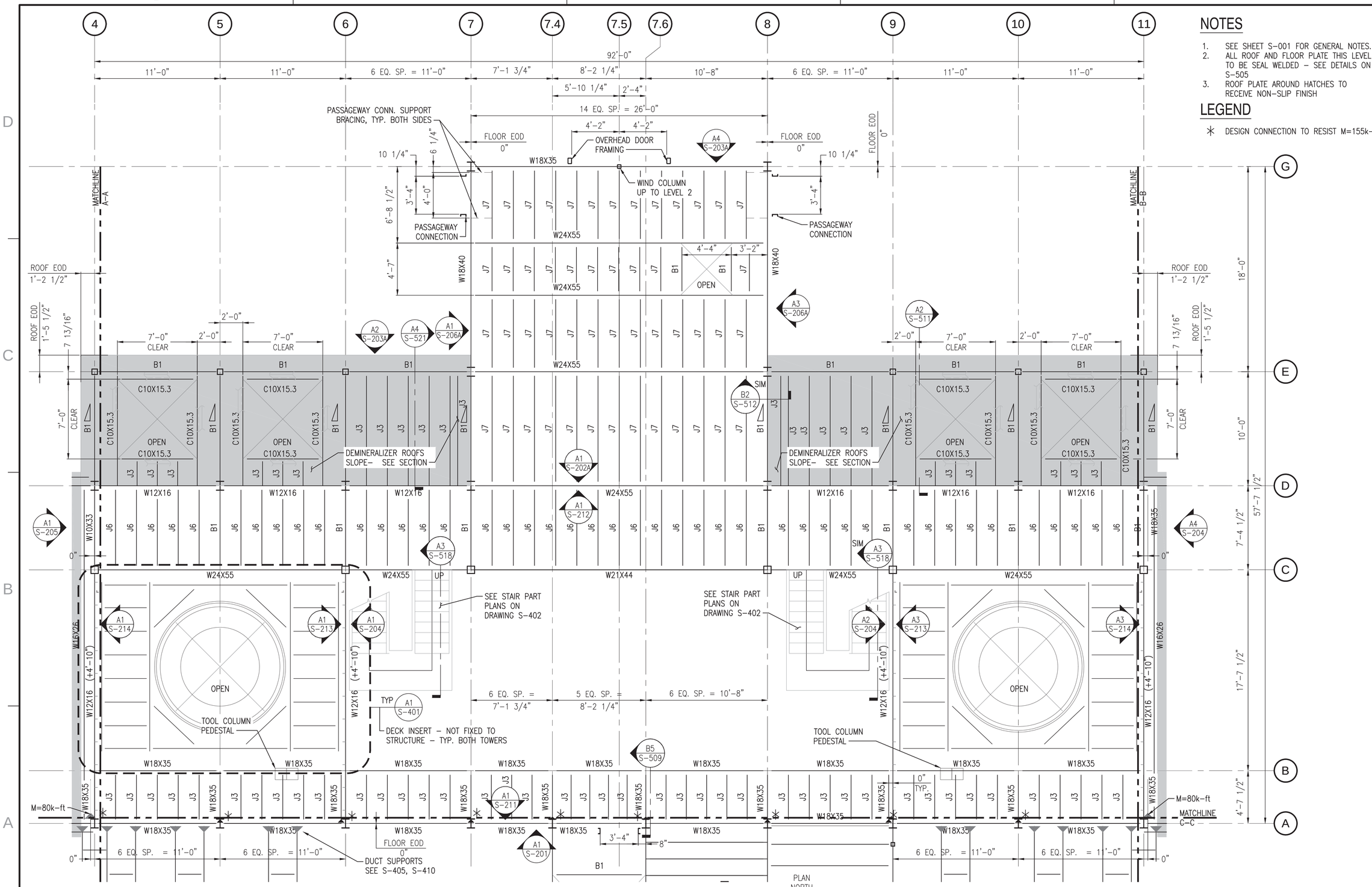

FRAMING PLAN LEVEL 1

SCALE: 1/4" = 1'-0"

T.O.S. EL. 15'-3 7/8" U.N.O.

Scale: 1/4" = 1'-0"

SYM	DESCRIPTION	DATE	APPR
0	ISSUED FOR CONSTRUCTION	10/28/2016	CBC

NAVFAC

STATE OF MAINE SAMUEL J. THOMAS No. 12734 LICENSED PROFESSIONAL ENGINEER 10/28/16

SEAL

Colby Company engineering

A/E INFO

APPROVED David W. Thurnfield

FOR COMMANDER NAVFAC

ACTIVITY TIM FISHER C. 2370.6 BRANCH HEAD

SATISFACTORY TO DATE 10/28/2016

DES SJT DRW ERB CHK CBC

PMDM PETER STOCKLESS

BRANCH MANAGER IAN BODWELL

FEAD/P&E AMIN BAHROUR

FIRE PROTECTION PATRICK BAKAJ

DEPARTMENT OF THE NAVY
NAVAL FACILITIES ENGINEERING COMMAND
PUBLIC WORKS DEPARTMENT - MAINE

NAVAL FACILITIES ENGINEERING COMMAND ~ MID-ATLANTIC
NAVAL SHIPYARD - PORTSMOUTH, NH

PORTSMOUTH NAVAL SHIPYARD
KITTERY, ME

DRY DOCK #1 DEFUELING COMPLEX
M-140 COMPLEX

FRAMING PLAN LEVEL 1

EPROJECT NO.: 1363311

CONSTR. CONTR. NO. N40085-17-C-5002

NAVFAC DRAWING NO. 12734810

SHEET 27 OF 188

S-101A DD1-16-891

DRAWFORM REVISION: 10 OCTOBER 2014

10/28/2016 7:52:53 AM X:\297 PORTSMOUTH NAVAL SHIPYARD\297.005.001 - DD#1 DEFUELING COMPLEX DESIGN\DRAWINGS\M140\SHEETS\S-101A.DWG

NOTES

1. SEE SHEET S-001 FOR GENERAL NOTES.

LEGEND

B2 DENOTES W16x31

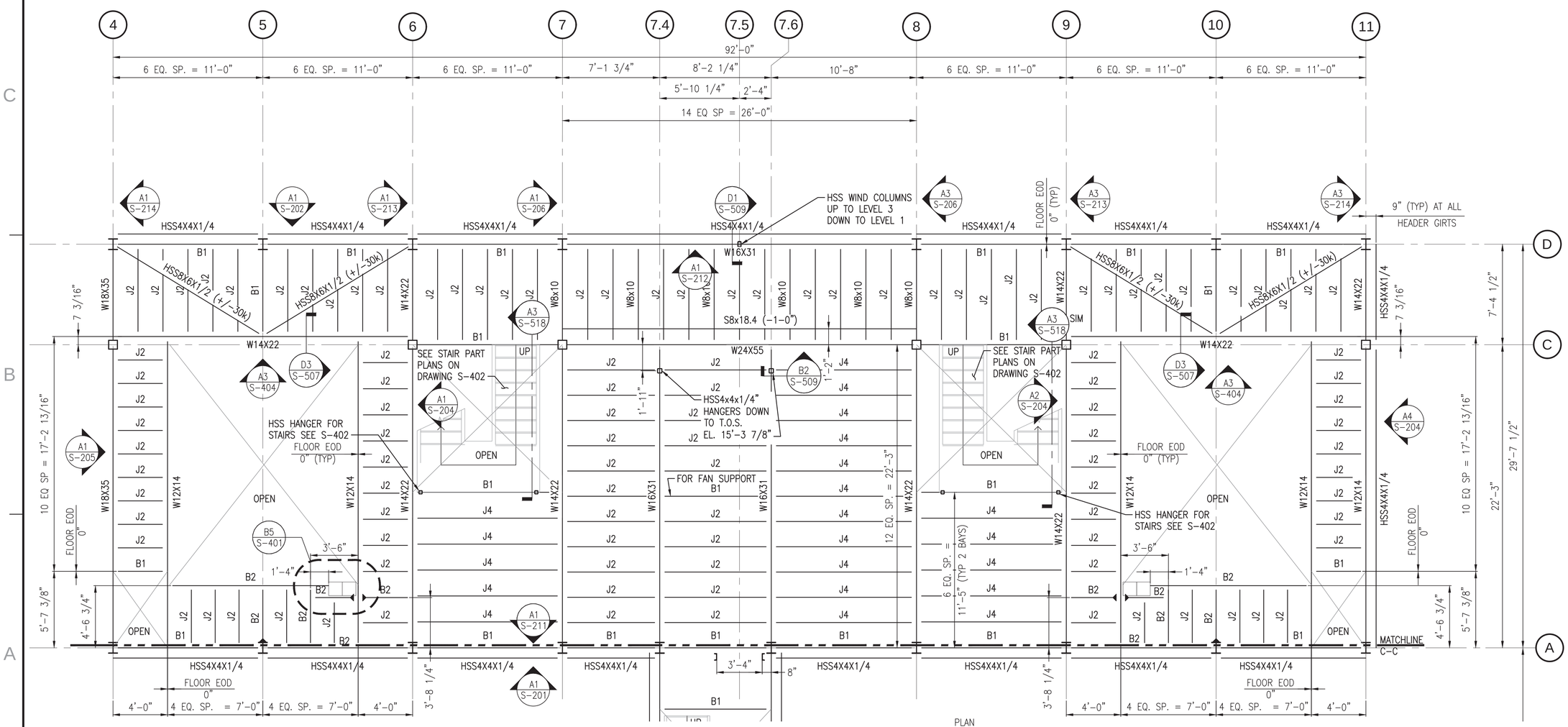

FRAMING PLAN LEVEL 2 (NO STORAGE ENCLOSURE)

SCALE: 1/4" = 1'-0"

T.O.S. EL. 25'-3 7/8" U.N.O.

Scale: 1/4" = 1'-0"

SYM	DESCRIPTION	DATE	APPR
0	ISSUED FOR CONSTRUCTION	10/28/2016	CBC

NAVFAC

STATE OF MAINE SAMUEL J. THOMAS No. 12734 LICENSED PROFESSIONAL ENGINEER 10/28/16

SEAL

Colby Company engineering

A/E INFO

APPROVED David W. Thurnfield

FOR COMMANDER NAVFAC

ACTIVITY: TIM FISHER, C. 2370.6 BRANCH HEAD

SATISFACTORY TO DATE 10/28/2016

DES SJT | DRW ERB | CHK CBC

PMDM: PETER STOCKLESS

BRANCH MANAGER: IAN BODWELL

FEADPM&E: AMIN BAHROUR

FIRE PROTECTION: PATRICK BAKAJ

DEPARTMENT OF THE NAVY
NAVAL FACILITIES ENGINEERING COMMAND ~ MID-ATLANTIC
PUBLIC WORKS DEPARTMENT - MAINE

NAVAL FACILITIES ENGINEERING COMMAND
NAVAL SHIPYARD - PORTSMOUTH, NH

KITTERY, ME

PORTSMOUTH NAVAL SHIPYARD
DRY DOCK #1 DEFUELING COMPLEX
M-140 COMPLEX

FRAMING PLAN LEVEL 2 (NO STORAGE ENCLOSURE)

EPROJECT NO.: 1363311

CONSTR. CONTR. NO. N40085-17-C-5002

NAVFAC DRAWING NO. 12734811

SHEET 28 OF 188

S-102 | DD1-16-892

DRAWFORM REVISION: 10 OCTOBER 2014

10/28/2016 6:35:07 AM X:\297 PORTSMOUTH NAVAL SHIPYARD\297.005.001 - DD#1 DEFUELING COMPLEX DESIGN\DRAWINGS\M140\SHEETS\S-102.DWG

NOTES

1. SEE SHEET S-001 FOR GENERAL NOTES.

LEGEND

B2 DENOTES W16x31

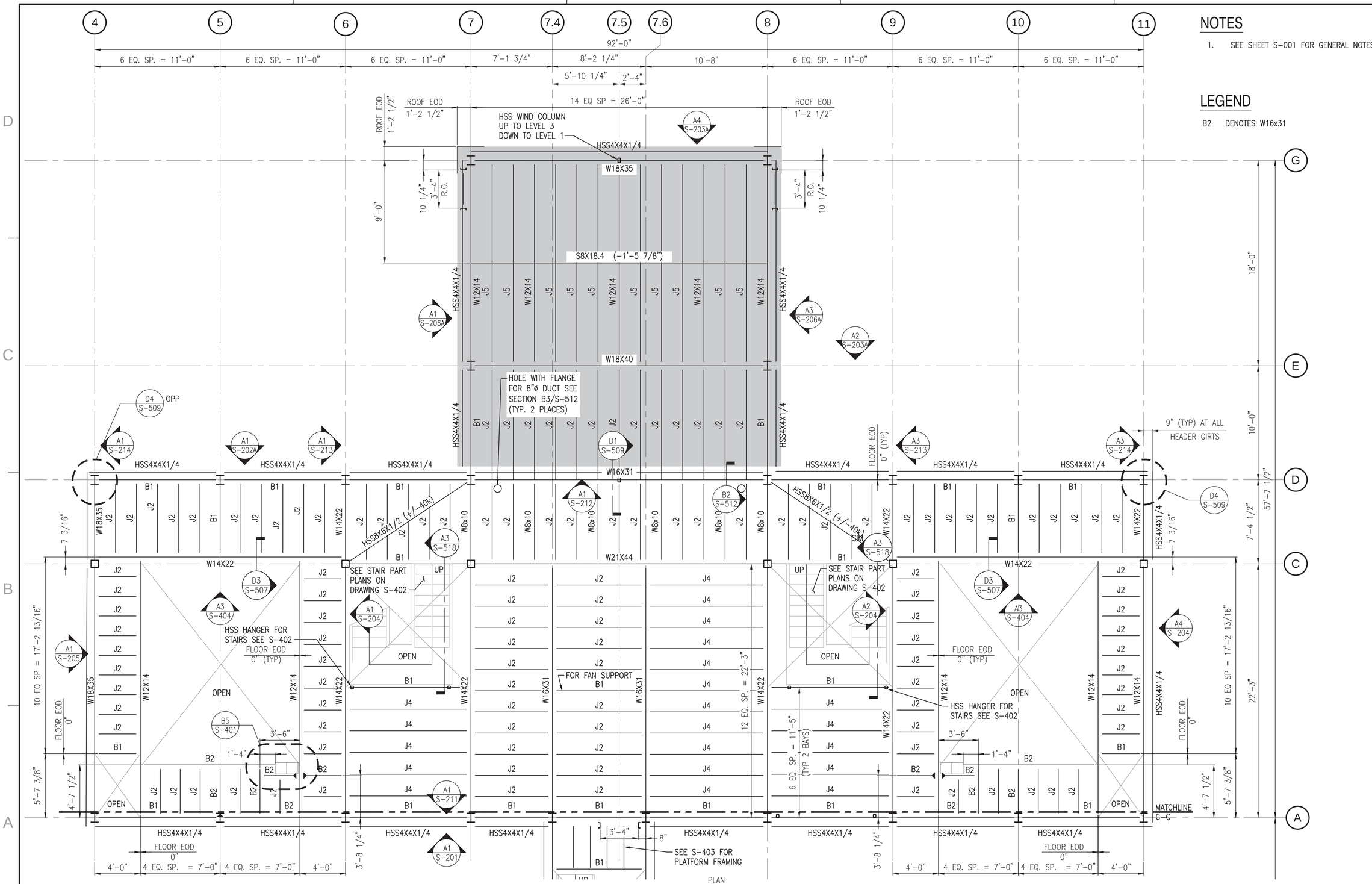

FRAMING PLAN LEVEL 2

SCALE: 1/4" = 1'-0"

T.O.S. EL. 25'-3 7/8" U.N.O.

Scale: 1/4" = 1'-0"

SYM	DESCRIPTION	DATE	APPR
0	ISSUED FOR CONSTRUCTION	10/28/2016	CBC

NAVFAC

STATE OF MAINE SAMUEL J. THOMAS No. 12734 LICENSED PROFESSIONAL ENGINEER 10/28/16

SEAL

Colby Company engineering

A/E INFO

APPROVED David W. Thurnfield

FOR COMMANDER NAVFAC

ACTIVITY: TIM FISHER C. 2370.6 BRANCH HEAD

SATISFACTORY TO DATE 10/28/2016

DES SJT | DRW ERB | CHK CBC

PMDM: PETER STOCKLESS

BRANCH MANAGER: IAN BODWELL

FEADPM&E: AMIN BAHROUR

FIRE PROTECTION: PATRICK BAKAJ

DEPARTMENT OF THE NAVY
PUBLIC WORKS DEPARTMENT - MAINE

NAVAL FACILITIES ENGINEERING COMMAND
NAVAL FACILITIES ENGINEERING COMMAND ~ MID-ATLANTIC
NAVAL SHIPYARD - PORTSMOUTH, NH

PORTSMOUTH NAVAL SHIPYARD
KITTERY, ME

DRY DOCK #1 DEFUELING COMPLEX
M-140 COMPLEX

FRAMING PLAN LEVEL 2

EPROJECT NO.: 1363311

CONSTR. CONTR. NO. N40085-17-C-5002

NAVFAC DRAWING NO. 12734812

SHEET 29 OF 188

S-102A | DD1-16-893

DRAWFORM REVISION: 10 OCTOBER 2014

10/28/2016 6:35:11 AM X:\297 PORTSMOUTH NAVAL SHIPYARD\297.005.001 - DD#1 DEFUELING COMPLEX DESIGN\DRAWINGS\M140\SHEETS\S-102A.DWG

NOTES

1. SEE SHEET S-001 FOR GENERAL NOTES.

LEGEND

B2 DENOTES W16x31

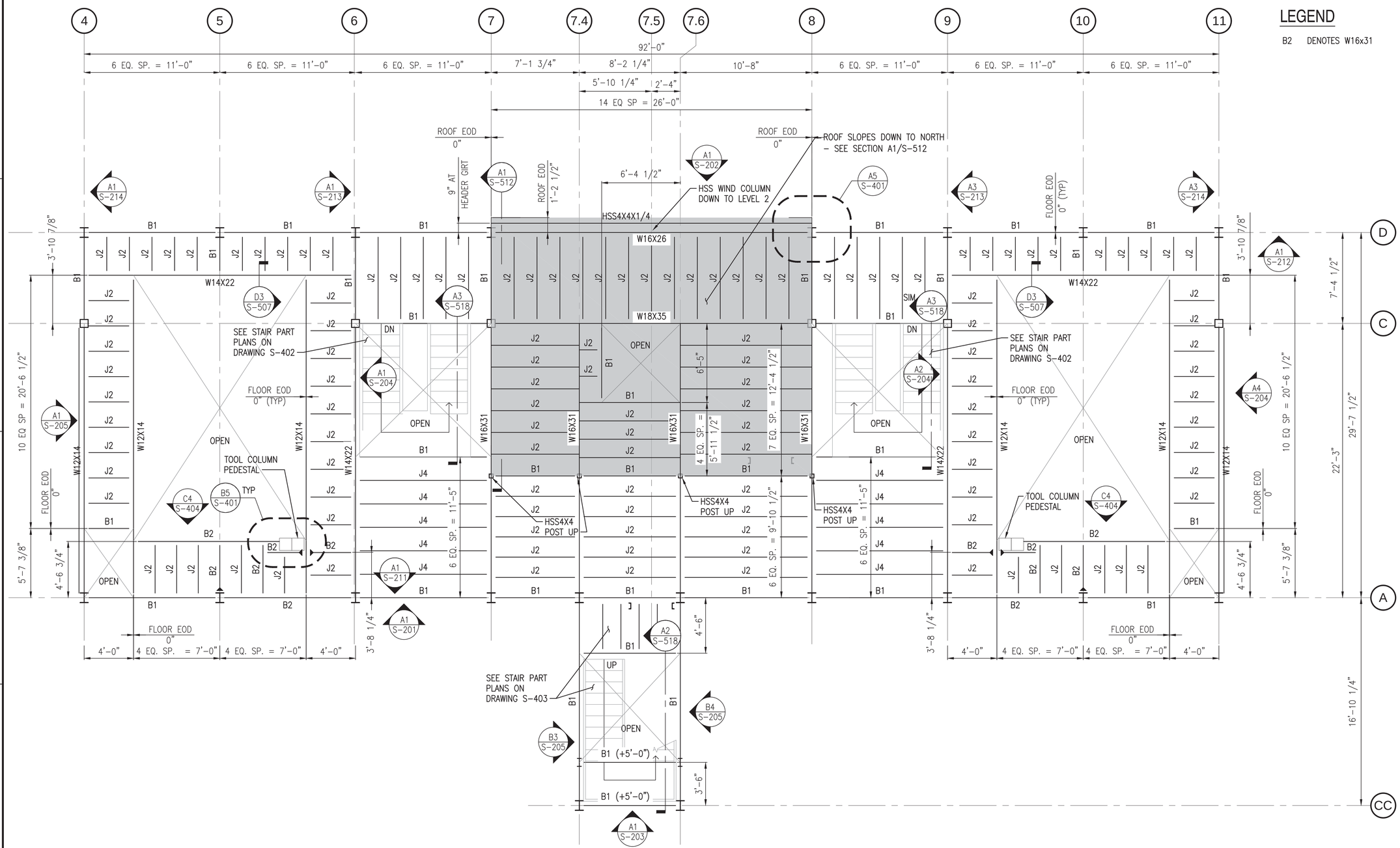

FRAMING PLAN LEVEL 3

SCALE: 1/4" = 1'-0"

T.O.S. EL. 35'-3 7/8" U.N.O.

PLAN NORTH

Scale: 1/4" = 1'-0"

SYM	DESCRIPTION	DATE	APPR
0	ISSUED FOR CONSTRUCTION	10/28/2016	CBC

NAVFAC

STATE OF MAINE — SAMUEL J. THOMAS — LICENSED PROFESSIONAL ENGINEER — 10/28/16 — SEAL

Colby Company engineering — A/E INFO

APPROVED: David W. Thurnfield — FOR COMMANDER NAVFAC

ACTIVITY: TIM FISHER, C. 2370.6 BRANCH HEAD

SATISFACTORY TO DATE 10/28/2016

DES SJT | DRW ERB | CHK CBC

PMDM: PETER STOCKLESS

BRANCH MANAGER: IAN BODWELL

FEAD/PM&E: AMIN BAHROUR

FIRE PROTECTION: PATRICK BAKAJ

DEPARTMENT OF THE NAVY
NAVAL FACILITIES ENGINEERING COMMAND
PUBLIC WORKS DEPARTMENT - MAINE

NAVAL FACILITIES ENGINEERING COMMAND ~ MID-ATLANTIC
NAVAL SHIPYARD - PORTSMOUTH, NH

PORTSMOUTH NAVAL SHIPYARD
KITTERY, ME

DRY DOCK #1 DEFUELING COMPLEX
M-140 COMPLEX

FRAMING PLAN LEVEL 3

EPROJECT NO.: 1363311

CONSTR. CONTR. NO.: N40085-17-C-5002

NAVFAC DRAWING NO.: 12734813

SHEET 30 OF 188

S-103 | DD1-16-894

DRAWFORM REVISION: 10 OCTOBER 2014

10/28/2016 6:35:15 AM X:\297 PORTSMOUTH NAVAL SHIPYARD\297.005.001 - DD#1 DEFUELING COMPLEX DESIGN\DRAWINGS\M140\SHEETS\S-103.DWG

NOTES

1. SEE SHEET S-001 FOR GENERAL NOTES.
2. HSS HEADER GIRT TO BE 5/16" LOWER THAN TOP OF STEEL TO ACCOMMODATE ROOF PLATE SLOPE.

LEGEND

DENOTES 1/4" STEEL ROOF PLATE. SEAM WELD TO ADJACENT PLATES, INTERMITTENT WELDS TO STRUCTURE BELOW. APPLY SLIP RESISTANT FINISH TO ALL REGIONS CONTAINED BY GUARDRAILS.

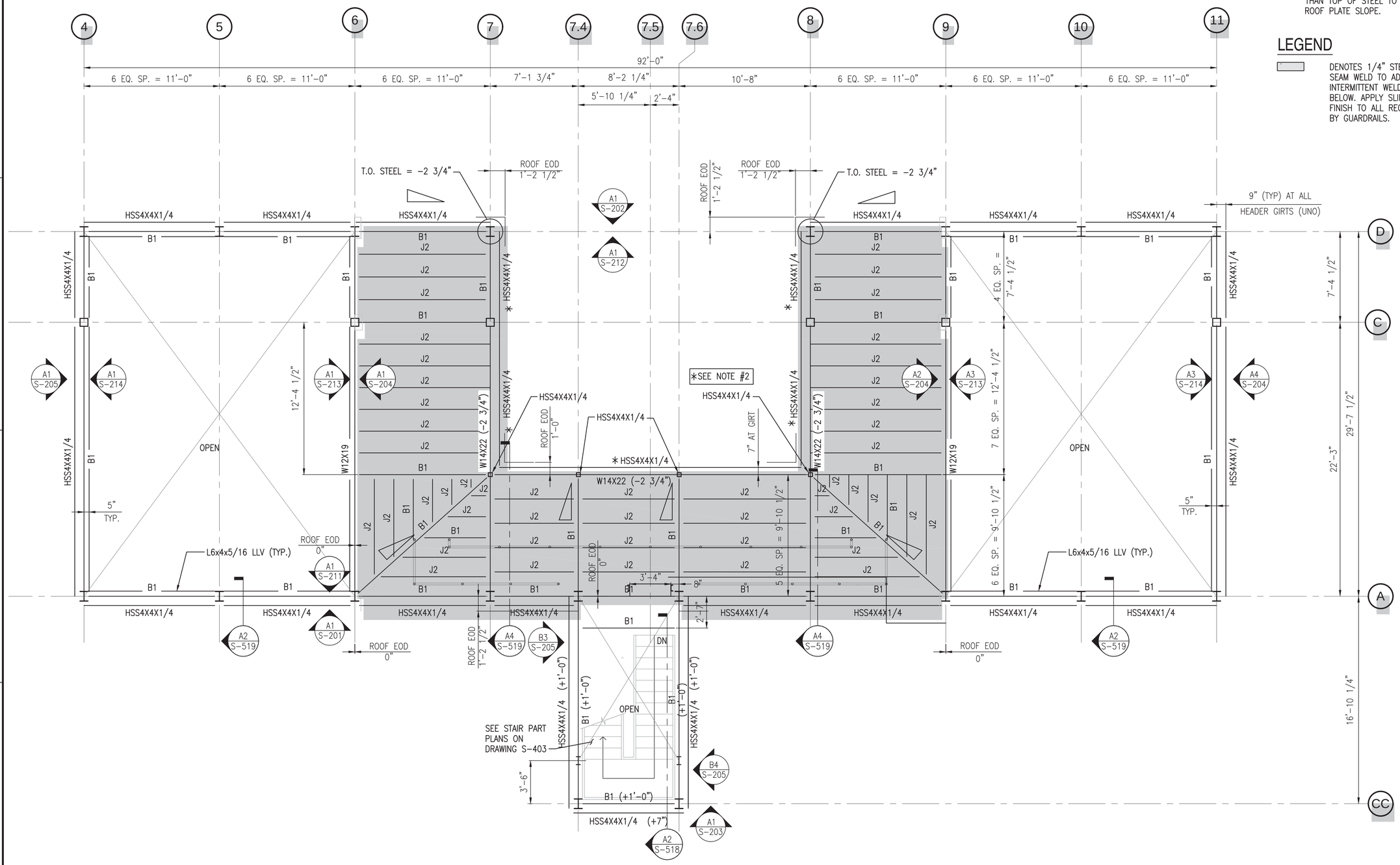

FRAMING PLAN LEVEL 4

SCALE: 1/4" = 1'-0"

T.O.S. EL. 47'-10 1/4" U.N.O.

SYM	DESCRIPTION	DATE	APPR
0	ISSUED FOR CONSTRUCTION	10/28/2016	CBC

NAVFAC

STATE OF MAINE — SAMUEL J. THOMAS — LICENSED PROFESSIONAL ENGINEER — 10/28/16 — SEAL

Colby Company engineering — A/E INFO

APPROVED BY: David W. Thumfuld
FOR COMMANDER NAVFAC

ACTIVITY: TIM FISHER, C. 2370.6 BRANCH HEAD

SATISFACTORY TO DATE 10/28/2016

DES	SJT	DRW	ERB	CHK	CBC

PM/DM: PETER STOCKLESS
BRANCH MANAGER: IAN BODWELL
FEAD/PM&E: AMIN BAHROUR
FIRE PROTECTION: PATRICK BAKAJ

DEPARTMENT OF THE NAVY
NAVAL FACILITIES ENGINEERING COMMAND
PUBLIC WORKS DEPARTMENT - MAINE

NAVAL FACILITIES ENGINEERING COMMAND ~ MID-ATLANTIC
NAVAL SHIPYARD - PORTSMOUTH NH

PORTSMOUTH NAVAL SHIPYARD
KITTERY, ME

DRY DOCK #1 DEFUELING COMPLEX
M-140 COMPLEX

FRAMING PLAN LEVEL 4

EPROJECT NO.: 1363311
CONSTR. CONTR. NO.: N40085-17-C-5002
NAVFAC DRAWING NO.: 12734814
SHEET 31 OF 188

S-104 | DD1-16-895

DRAWFORM REVISION: 10 OCTOBER 2014

10/28/2016 6:35:21 AM X:\297 PORTSMOUTH NAVAL SHIPYARD\297.005.001 - DD#1 DEFUELING COMPLEX DESIGN\DRAWINGS\M140\SHEETS\S-104.DWG

NOTES

1. SEE SHEET S-001 FOR GENERAL NOTES.

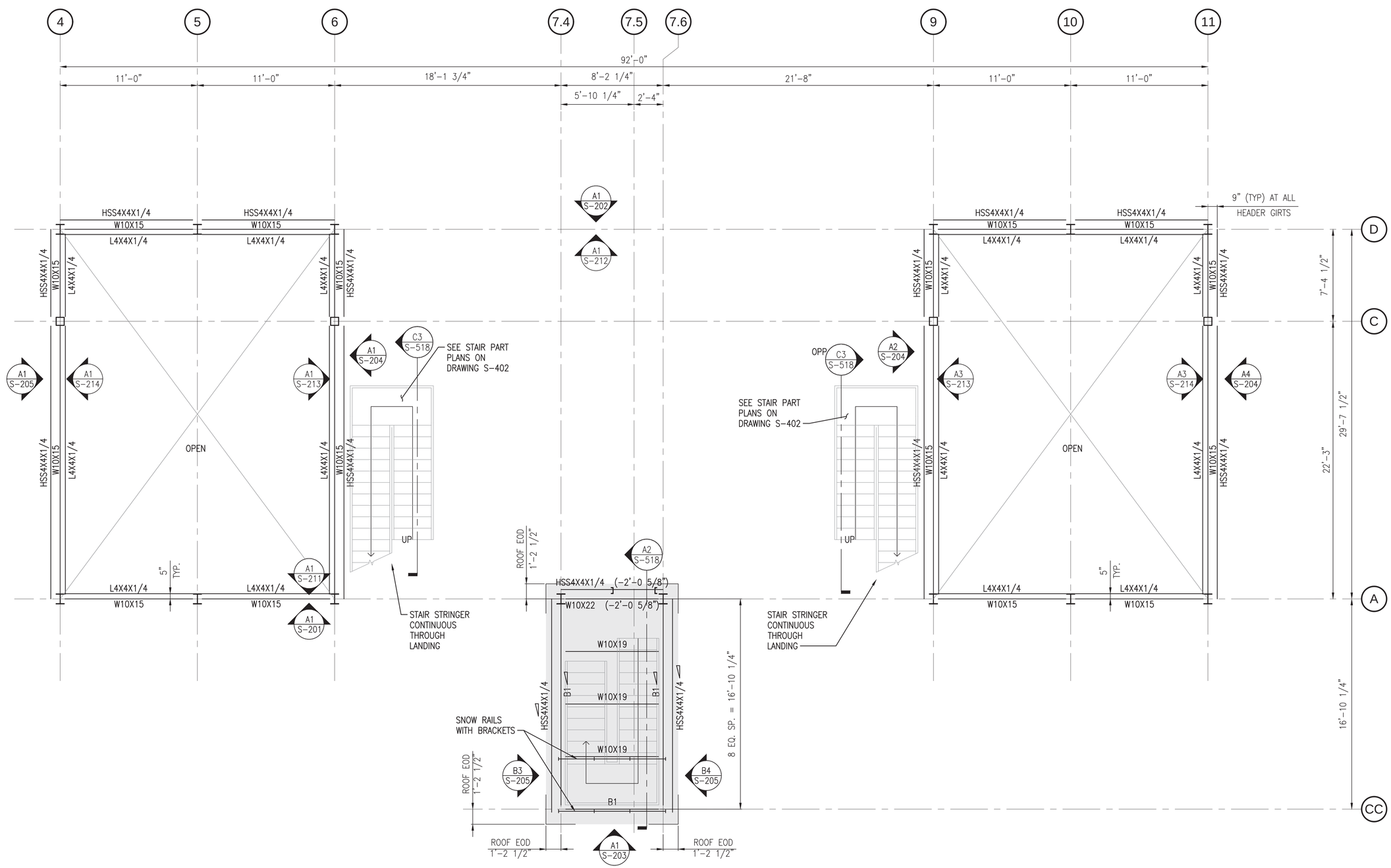

FRAMING PLAN LEVEL 5

SCALE: 1/4" = 1'-0"

T.O.S. EL. 60'-4 1/4" U.N.O.

PLAN NORTH

Scale: 1/4" = 1'-0"

SYM	DESCRIPTION	DATE	APPR
0	ISSUED FOR CONSTRUCTION	10/28/2016	CBC

NAVFAC

STATE OF MAINE SAMUEL J. THOMAS No. 13363 LICENSED PROFESSIONAL ENGINEER 10/28/16

SEAL

Colby Company engineering

A/E INFO

APPROVED: David W. Shurfeld

FOR COMMANDER NAVFAC

ACTIVITY: TIM FISHER C. 2370.6 BRANCH HEAD

SATISFACTORY TO DATE 10/28/2016

DES SJT | DRW ERB | CHK CBC

PMDM: PETER STOCKLESS

BRANCH MANAGER: IAN BODWELL

FEAD/PM/E: AMIN BAHROUR

FIRE PROTECTION: PATRICK BAKAJ

DEPARTMENT OF THE NAVY
NAVAL FACILITIES ENGINEERING COMMAND
PUBLIC WORKS DEPARTMENT - MAINE

NAVAL FACILITIES ENGINEERING COMMAND ~ MID-ATLANTIC
NAVAL SHIPYARD - PORTSMOUTH, NH

PORTSMOUTH NAVAL SHIPYARD
DRY DOCK #1 DEFUELING COMPLEX
M-140 COMPLEX
KITTERY, ME

FRAMING PLAN LEVEL 5

EPROJECT NO.: 1363311

CONSTR. CONTR. NO. N40085-17-C-5002

NAVFAC DRAWING NO. 12734815

SHEET 32 OF 188

S-105 | DD1-16-896

DRAWFORM REVISION: 10 OCTOBER 2014

10/28/2016 6:35:25 AM X:\297 PORTSMOUTH NAVAL SHIPYARD\297.005.001 - DD#1 DEFUELING COMPLEX DESIGN\DRAWINGS\M140\SHEETS\S-105.DWG

NOTES

1. SEE SHEET S-001 FOR GENERAL NOTES.
2. ALL EXPOSED EXTERIOR STEEL SHALL BE GALVANIZED.
3. SEE SPECIFICATIONS FOR ADDITIONAL FABRICATION AND ERECTION TOLERANCE REQUIREMENTS FOR CRANE RAIL.

LEGEND

D1 — DENOTES 1/4" STEEL PLATE ON LIGHT GAGE STEEL JOISTS.

D2 — DENOTES 1"x1/4" BEARING BARS

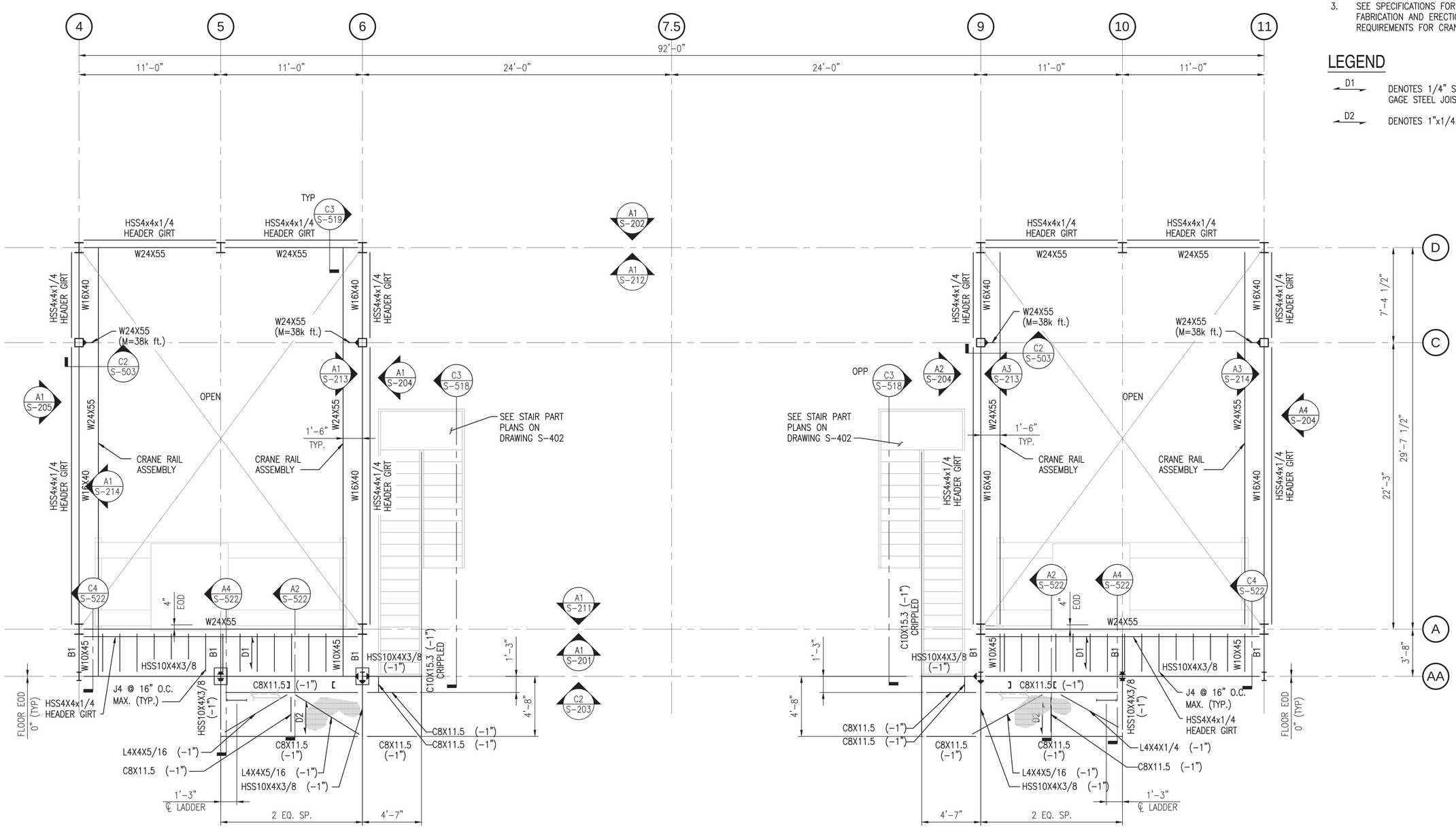

FRAMING PLAN AT CRANE RAIL

SCALE: 1/4" = 1'-0"

T.O.RAIL EL. 66'-0" U.N.O.
T.O.S. EL. 65-8 9/16"

PLAN NORTH

Scale: 1/4" = 1'-0"

SYM	DESCRIPTION	DATE	APPR
0	ISSUED FOR CONSTRUCTION	10/28/2016	CBC

NAVFAC

STATE OF MAINE — SAMUEL J. THOMAS — LICENSED PROFESSIONAL ENGINEER — 08/10

SEAL

Colby Company engineering

A/E INFO

APPROVED: David W. Thumfeld

FOR COMMANDER NAVFAC

ACTIVITY: TIM FISHER, C. 2370.6 BRANCH HEAD

SATISFACTORY TO DATE 10/28/2016

DES SJT | DRW ERB | CHK CBC

PM/DM: PETER STOCKLESS

BRANCH MANAGER: IAN BODWELL

FEAD/PM&E: AMIN BAHROUR

FIRE PROTECTION: PATRICK BAKAJ

DEPARTMENT OF THE NAVY
NAVAL FACILITIES ENGINEERING COMMAND ~ MID-ATLANTIC
PUBLIC WORKS DEPARTMENT - MAINE

NAVAL FACILITIES ENGINEERING COMMAND
NAVAL SHIPYARD - PORTSMOUTH, NH

PORTSMOUTH NAVAL SHIPYARD
KITTERY, ME

DRY DOCK #1 DEFUELING COMPLEX
M-140 COMPLEX

FRAMING PLAN AT CRANE RAIL

EPROJECT NO.: 1363311

CONSTR. CONTR. NO.: N40085-17-C-5002

NAVFAC DRAWING NO.: 12734816

SHEET 33 OF 188

S-106 | DD1-16-897

DRAWFORM REVISION: 10 OCTOBER 2014

10/28/2016 6:35:29 AM X:\297 PORTSMOUTH NAVAL SHIPYARD\297.005.001 - DDH1 DEFUELING COMPLEX DESIGN\DRAWINGS\M140\SHEETS\S-106.DWG

NOTES

1. SEE SHEET S-001 FOR GENERAL NOTES.

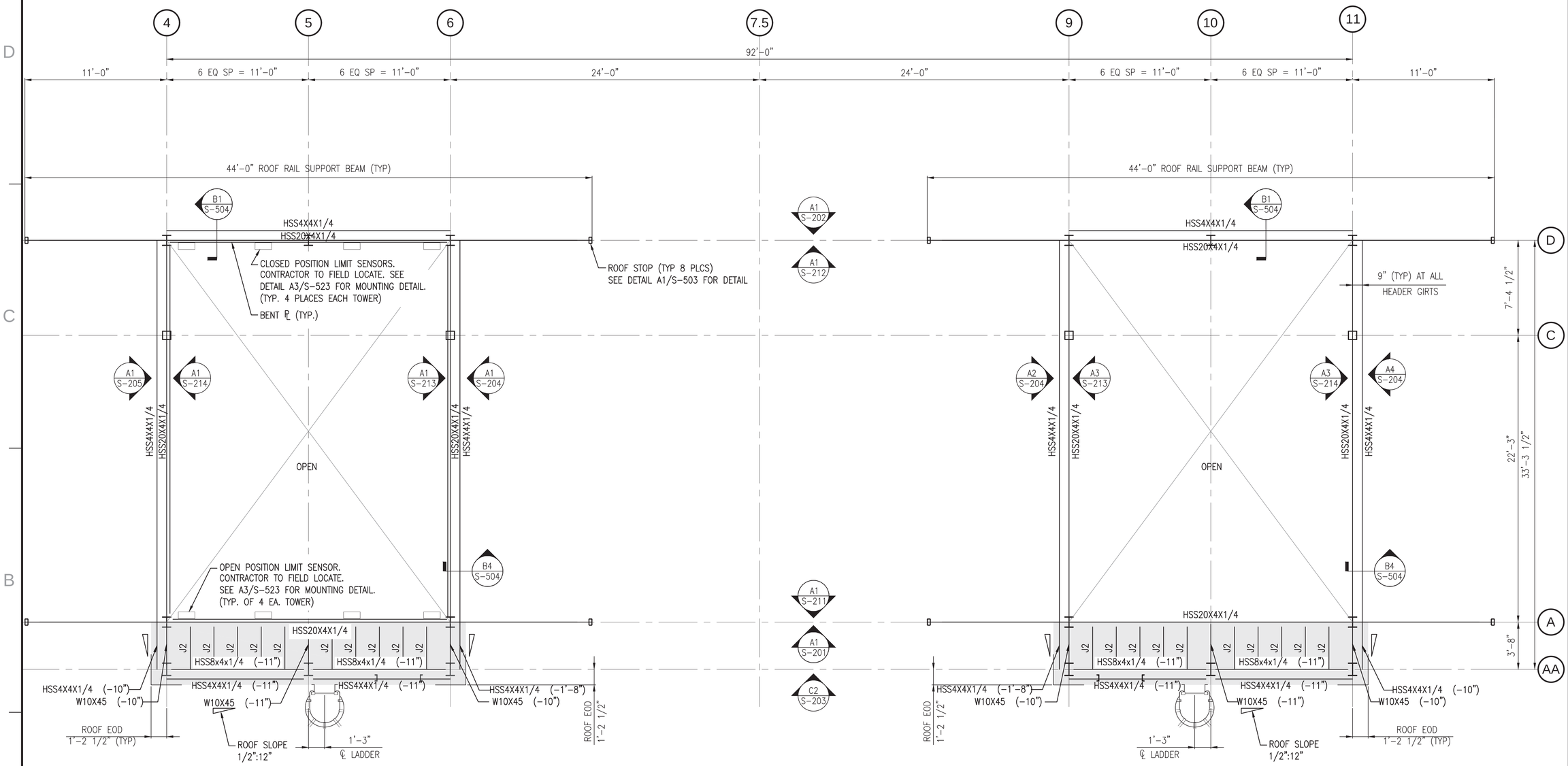

FRAMING PLAN TOP OF ENCLOSURE

SCALE: 1/4" = 1'-0"

T.O.S. EL. 74'-1" U.N.O.

PLAN NORTH

Scale: 1/4" = 1'-0"

SYM	DESCRIPTION	DATE	APPR
0	ISSUED FOR CONSTRUCTION	10/28/2016	CBC

NAVFAC

STATE OF MAINE — SAMUEL J. THOMAS — LICENSED PROFESSIONAL ENGINEER — 10/28/16

SEAL

Colby Company engineering

A/E INFO

APPROVED David W. Thurnfield

FOR COMMANDER NAVFAC

ACTIVITY: TIM FISHER C. 2370.6 BRANCH HEAD

SATISFACTORY TO DATE 10/28/2016

DES SJT | DRW ERB | CHK CBC

PMDM: PETER STOCKLESS

BRANCH MANAGER: IAN BODWELL

FEA/DPM&E: AMIN BAHROUR

FIRE PROTECTION: PATRICK BAKAJ

DEPARTMENT OF THE NAVY
NAVAL FACILITIES ENGINEERING COMMAND
PUBLIC WORKS DEPARTMENT - MAINE

NAVAL FACILITIES ENGINEERING COMMAND ~ MID-ATLANTIC
NAVAL SHIPYARD - PORTSMOUTH, NH

PORTSMOUTH NAVAL SHIPYARD
KITTERY, ME

DRY DOCK #1 DEFUELING COMPLEX
M-140 COMPLEX

FRAMING PLAN TOP OF ENCLOSURE

EPROJECT NO.: 1363311

CONSTR. CONTR. NO. N40085-17-C-5002

NAVFAC DRAWING NO. 12734817

SHEET 34 OF 188

S-107 | DD1-16-898

DRAWFORM REVISION: 10 OCTOBER 2014

10/28/2016 6:35:33 AM X:\297 PORTSMOUTH NAVAL SHIPYARD\297.005.001 - DD#1 DEFUELING COMPLEX DESIGN\DRAWINGS\M140\SHEETS\S-107.DWG

NOTES

1. SEE SHEET S-001 FOR GENERAL NOTES.
2. SEE SPECIFICATIONS FOR ADDITIONAL FABRICATION AND ERECTION TOLERANCE REQUIREMENTS AT MOVABLE ROOF.

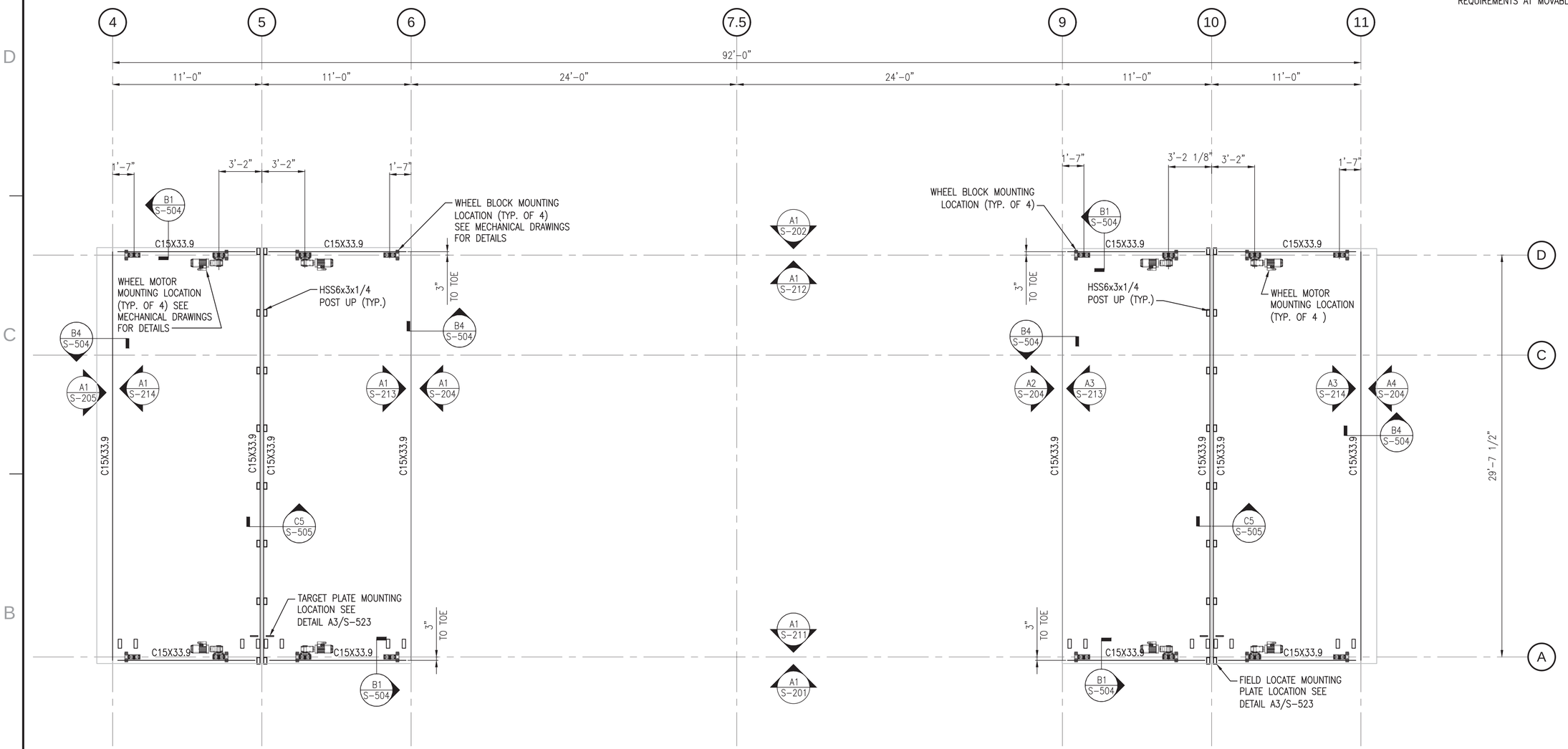

FRAMING PLAN AT B.O. MOVABLE ROOF

SCALE: 1/4" = 1'-0"

T.O.S. EL. 76'-1" U.N.O.

PLAN NORTH

0 2' 4' 8'
Scale: 1/4" = 1'-0"

SYM	DESCRIPTION	DATE	APPR
0	ISSUED FOR CONSTRUCTION	10/28/2016	CBC

NAVFAC

STATE OF MAINE
SAMUEL J. THOMAS
No. 14
LICENSED PROFESSIONAL ENGINEER
10/28/16
SEAL

Colby Company engineering
A/E INFO

APPROVED
David W. Thurnfield
FOR COMMANDER NAVFAC

ACTIVITY
TIM FISHER
C. 2370.6 BRANCH HEAD

SATISFACTORY TO DATE 10/28/2016
DES SJT DRW ERB CHK CBC
PMDM PETER STOCKLESS
BRANCH MANAGER IAN BODWELL
FEA/DPM&E AMIN BAHROUR
FIRE PROTECTION PATRICK BAKAJ

DEPARTMENT OF THE NAVY
NAVAL FACILITIES ENGINEERING COMMAND ~ MID-ATLANTIC
PUBLIC WORKS DEPARTMENT - MAINE
NAVAL FACILITIES ENGINEERING COMMAND
NAVAL SHIPYARD - PORTSMOUTH, NH
PORTSMOUTH NAVAL SHIPYARD
KITTERY, ME
DRY DOCK #1 DEFUELING COMPLEX
M-140 COMPLEX
FRAMING PLAN AT B.O. MOVABLE ROOF

EPROJECT NO.: 1363311
CONSTR. CONTR. NO. N40085-17-C-5002
NAVFAC DRAWING NO. 12734818
SHEET 35 OF 188
S-108 DD1-16-899

DRAWFORM REVISION: 10 OCTOBER 2014

10/28/2016 6:35:39 AM X:\297 PORTSMOUTH NAVAL SHIPYARD\297.005.001 - DD#1 DEFUELING COMPLEX DESIGN\DRAWINGS\M140\SHEETS\S-108.DWG

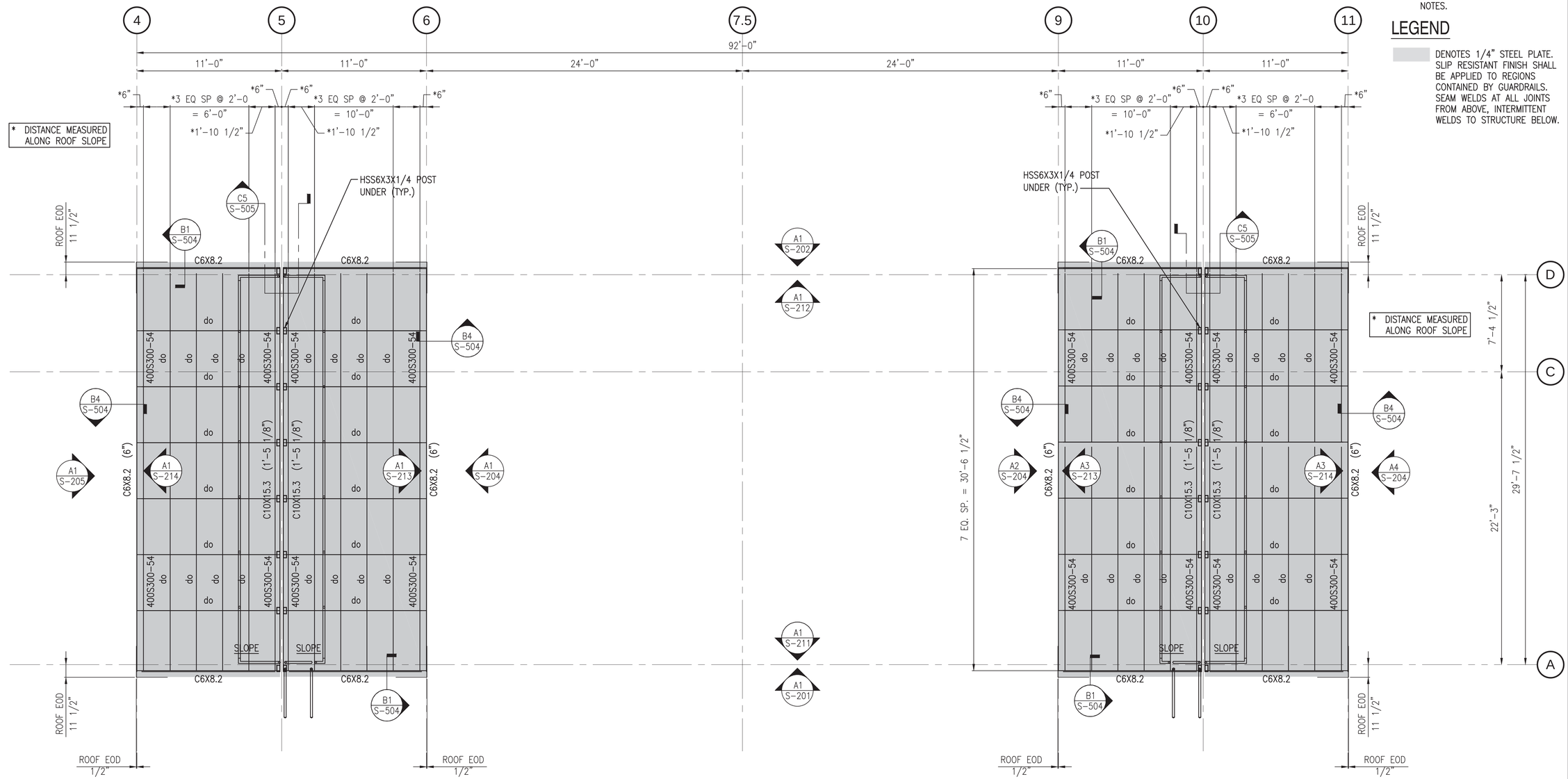

NOTES

1. SEE SHEET S-001 FOR GENERAL NOTES.

LEGEND

DENOTES 1/4" STEEL PLATE. SLIP RESISTANT FINISH SHALL BE APPLIED TO REGIONS CONTAINED BY GUARDRAILS. SEAM WELDS AT ALL JOINTS FROM ABOVE, INTERMITTENT WELDS TO STRUCTURE BELOW.

FRAMING PLAN AT T.O. MOVABLE ROOF

SCALE: 1/4" = 1'-0"

T.O.S. EL. 77'-6 1/8" U.N.O.

PLAN NORTH

Scale: 1/4" = 1'-0"

SYM	DESCRIPTION	DATE	APPR
0	ISSUED FOR CONSTRUCTION	10/28/2016	CBC

NAVFAC

STATE OF MAINE SAMUEL J. THOMAS No. 13811 LICENSED PROFESSIONAL ENGINEER 10/28/16

SEAL

Colby Company engineering

A/E INFO

APPROVED David W. Thurnfield

FOR COMMANDER NAVFAC

ACTIVITY: TIM FISHER C. 2370.6 BRANCH HEAD

SATISFACTORY TO DATE 10/28/2016

DES	SJT	DRW	ERB	CHK	CBC

PMDM: PETER STOCKLESS

BRANCH MANAGER: IAN BODWELL

FEAD/PM&E: AMIN BAHROUR

FIRE PROTECTION: PATRICK BAKAJ

DEPARTMENT OF THE NAVY
NAVAL FACILITIES ENGINEERING COMMAND
PUBLIC WORKS DEPARTMENT - MAINE

NAVAL FACILITIES ENGINEERING COMMAND ~ MID-ATLANTIC
NAVAL SHIPYARD - PORTSMOUTH, NH

PORTSMOUTH NAVAL SHIPYARD
KITTERY, ME

DRY DOCK #1 DEFUELING COMPLEX
M-140 COMPLEX

FRAMING PLAN AT T.O. MOVABLE ROOF

EPROJECT NO.: 1363311

CONSTR. CONTR. NO.: N40085-17-C-5002

NAVFAC DRAWING NO.: 12734819

SHEET 36 OF 188

S-109 | DD1-16-900

DRAWFORM REVISION: 10 OCTOBER 2014

10/28/2016 6:35:43 AM X:\297 PORTSMOUTH NAVAL SHIPYARD\297.005.001 - DD#1 DEFUELING COMPLEX DESIGN\DRAWINGS\M140\SHEETS\S-109.DWG

NOTES

1. SEE SHEET S-001 FOR GENERAL NOTES.
2. HSS4x4x1/4 HEADER GIRTS OUTBOARD OF FLOOR BEAMS AT LEVELS 1, 3, AND CRANE LEVEL, TOP OF ENCLOSURE. OTHER LEVEL HAVE GIRT OF SIZE TYPICAL FOR THAT BEAM LOCATED AT FLOOR LEVEL. WALL OPENINGS SHALL BE FRAMED WITH C6x8.2 UNLESS OTHERWISE NOTED.

FRAMING LEGEND

B1	DENOTES W10x12
VB1	DENOTES HSS6X6X3/8
Z6	DENOTES 6x2 1/2 Z-GIRT
Z12	DENOTES 12x3 1/2 Z-GIRT

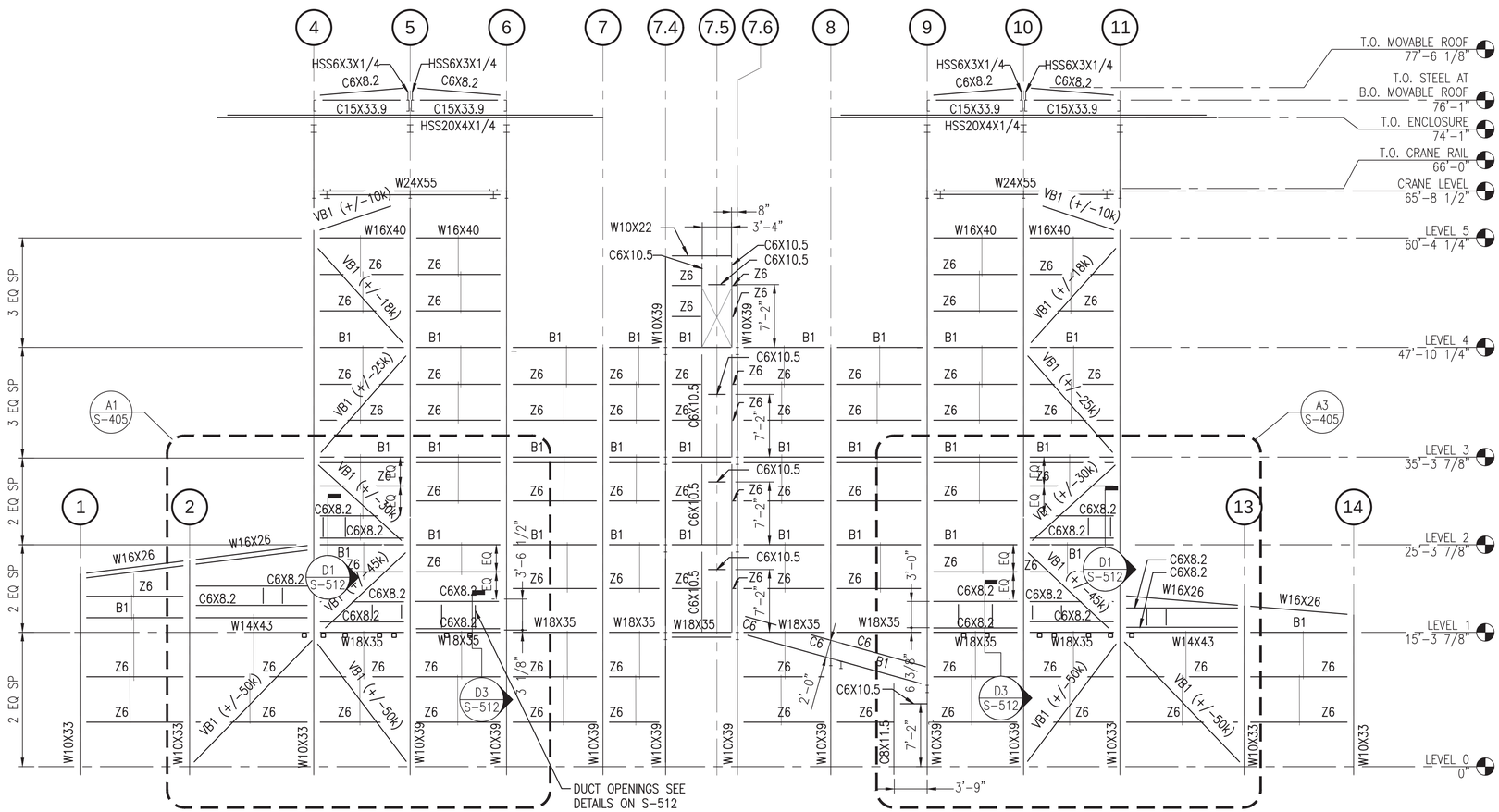

FRAMING ELEVATION AT COLUMN LINE A

SCALE: 1/8" = 1'-0"

S-100, S-100A, S-101, S-102, S-103, S-104, S-105, S-106, S-107, S-108, S-109

A1

0 4' 8' 16'
Scale: 1/8" = 1'-0"

SYM	DESCRIPTION	DATE	APPR
0	ISSUED FOR CONSTRUCTION	10/28/2016	CBC

NAVFAC

STATE OF MAINE
SAMUEL J. THOMAS No. 13455
LICENSED PROFESSIONAL ENGINEER
10/28/16
SEAL

Colby Company engineering
A/E INFO

APPROVED
David W. Trumfield
FOR COMMANDER NAVFAC

ACTIVITY
TIM FISHER
C. 2370.6 BRANCH HEAD

SATISFACTORY TO DATE 10/28/2016
DES SJT DRW ERB CHK CBC
PMDM PETER STOCKLESS
BRANCH MANAGER IAN BODWELL
FEAD/PM&E AMIN BAHROUR
FIRE PROTECTION PATRICK BAKAJ

DEPARTMENT OF THE NAVY
NAVAL FACILITIES ENGINEERING COMMAND
PUBLIC WORKS DEPARTMENT - MAINE

NAVAL FACILITIES ENGINEERING COMMAND ~ MID-ATLANTIC
NAVAL SHIPYARD - PORTSMOUTH, NH
PORTSMOUTH NAVAL SHIPYARD
KITTERY, ME

DRY DOCK #1 DEFUELING COMPLEX
M-140 COMPLEX

FRAMING ELEVATION AT COLUMN LINE A

EPROJECT NO.: 1363311
CONSTR. CONTR. NO. N40085-17-C-5002
NAVFAC DRAWING NO. 12734820
SHEET 37 OF 188

S-201 | DD1-16-901

DRAWFORM REVISION: 10 OCTOBER 2014

10/28/2016 6:35:47 AM X:\297 PORTSMOUTH NAVAL SHIPYARD\297.005.001 - DD#1 DEFUELING COMPLEX DESIGN\DRAWINGS\M140\SHEETS\S-201.DWG

NOTES

1. SEE SHEET S-001 FOR GENERAL NOTES.
2. HSS4x4x1/4 HEADER GIRTS OUTBOARD OF FLOOR BEAMS AT LEVELS 1, 3, CRANE LEVEL, AND TOP OF ENCLOSURE. FLOOR LEVELS SHALL HAVE GIRT TYPICAL OF BAY IF NO HEADER GIRT IS PRESENT. WALL OPENINGS SHALL BE FRAMED WITH C6x8.2 UNLESS OTHERWISE NOTED.
3. 16 ga. 3x3 ANGLE AT EXTERIOR PANEL STACK JOINTS – SEE DETAIL B1/S-519.
4. FRAMING BETWEEN COLUMNS LINES 7 AND 8 UP TO LEVEL 2 TO BE BOLTED TO EXTENT POSSIBLE TO FACILITATE FUTURE EXPANSION TO THE NORTH. ALL GIRTS AND WIND COLUMNS IN THIS AREA BETWEEN FLOOR LEVELS CAN BE REMOVED WITHOUT AFFECTING BUILDING STRUCTURE. FLOOR LEVEL FRAMING SHALL REMAIN.

FRAMING LEGEND

B1	DENOTES W10x12
VB1	DENOTES HSS6X6X3/8
Z6	DENOTES 6x2 1/2 Z-GIRT
Z12	DENOTES 12x3 1/2 Z-GIRT

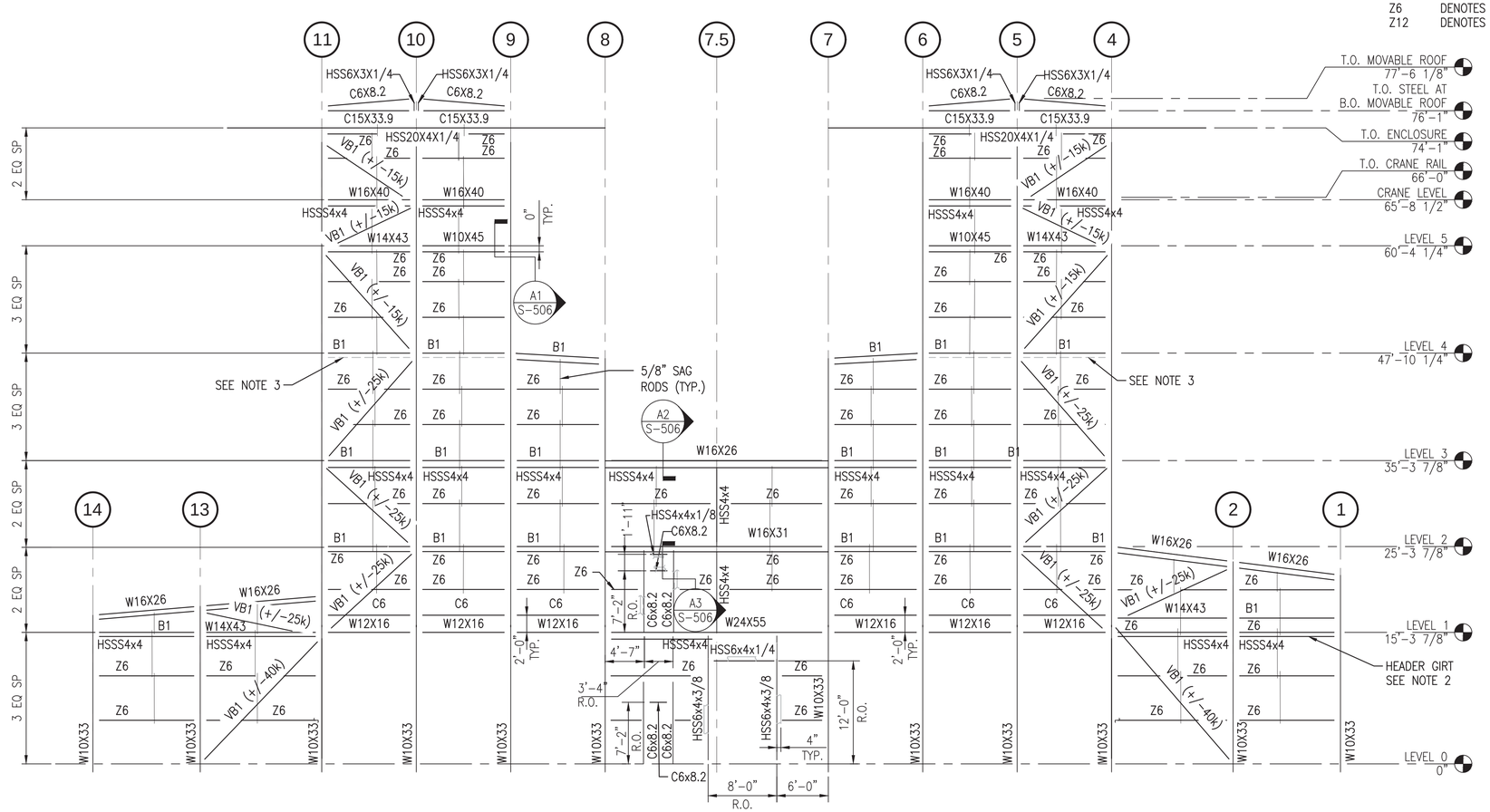

FRAMING ELEVATION AT COLUMN LINE D (NO STORAGE ENCLOSURE)

SCALE: 1/8" = 1'-0"

S-100, S-101, S-102, S-103, S-104, S-105, S-106, S-107, S-108, S-109

A1

0 4' 8' 16'
Scale: 1/8" = 1'-0"

SYM	DESCRIPTION	DATE	APPR
0	ISSUED FOR CONSTRUCTION	10/28/2016	CBC

NAVFAC

STATE OF MAINE SAMUEL J. THOMAS No. 12670 LICENSED PROFESSIONAL ENGINEER 10/28/16
SEAL

Colby Company engineering
A/E INFO

APPROVED
David W. Trumfield
FOR COMMANDER NAVFAC

ACTIVITY
TIM FISHER
C. 2370.6 BRANCH HEAD

SATISFACTORY TO DATE 10/28/2016
DES SJT DRW ERB CHK CBC
PM/DM PETER STOCKLESS
BRANCH MANAGER IAN BODWELL
FEAD/PM&E AMIN BAHROUR
FIRE PROTECTION PATRICK BAKAJ

DEPARTMENT OF THE NAVY
NAVAL FACILITIES ENGINEERING COMMAND
PUBLIC WORKS DEPARTMENT - MAINE
NAVAL FACILITIES ENGINEERING COMMAND ~ MID-ATLANTIC
NAVAL SHIPYARD - PORTSMOUTH, NH
PORTSMOUTH NAVAL SHIPYARD
KITTERY, ME
DRY DOCK #1 DEFUELING COMPLEX
M-140 COMPLEX
FRAMING ELEVATION AT COLUMN LINE D (NO STORAGE ENCLOSURE)

EPROJECT NO.: 1363311
CONSTR. CONTR. NO. N40085-17-C-5002
NAVFAC DRAWING NO. 12734821
SHEET 38 OF 188
S-202 DD1-16-902

DRAWFORM REVISION: 10 OCTOBER 2014

10/28/2016 7:56:25 AM X:\297 PORTSMOUTH NAVAL SHIPYARD\297.005.001 - DD#1 DEFUELING COMPLEX DESIGN\DRAWINGS\M140\SHEETS\S-202.DWG

NOTES

1. SEE SHEET S-001 FOR GENERAL NOTES.
2. HSS4x4x1/4 HEADER GIRTS OUTBOARD OF FLOOR BEAMS AT LEVELS 1, 3, CRANE LEVEL, AND TOP OF ENCLOSURE. OTHER FLOOR LEVELS SHALL HAVE GIRT TYPICAL OF BAY IF NO HEADER GIRT. WALL OPENINGS SHALL BE FRAMED WITH C6x8.2 UNLESS OTHERWISE NOTED.
3. 16 ga. 3x3 ANGLE AT EXTERIOR PANEL STACK JOINTS – SEE DETAIL B1/S-519.
4. FRAMING BETWEEN COLUMNS LINES 7 AND 8 UP TO LEVEL 2 TO BE BOLTED TO EXTENT POSSIBLE TO FACILITATE FUTURE EXPANSION TO THE NORTH.

FRAMING LEGEND

B1	DENOTES W10x12
VB1	DENOTES HSS6X6X3/8
Z6	DENOTES 6x2 1/2 Z-GIRT
Z12	DENOTES 12x3 1/2 Z-GIRT

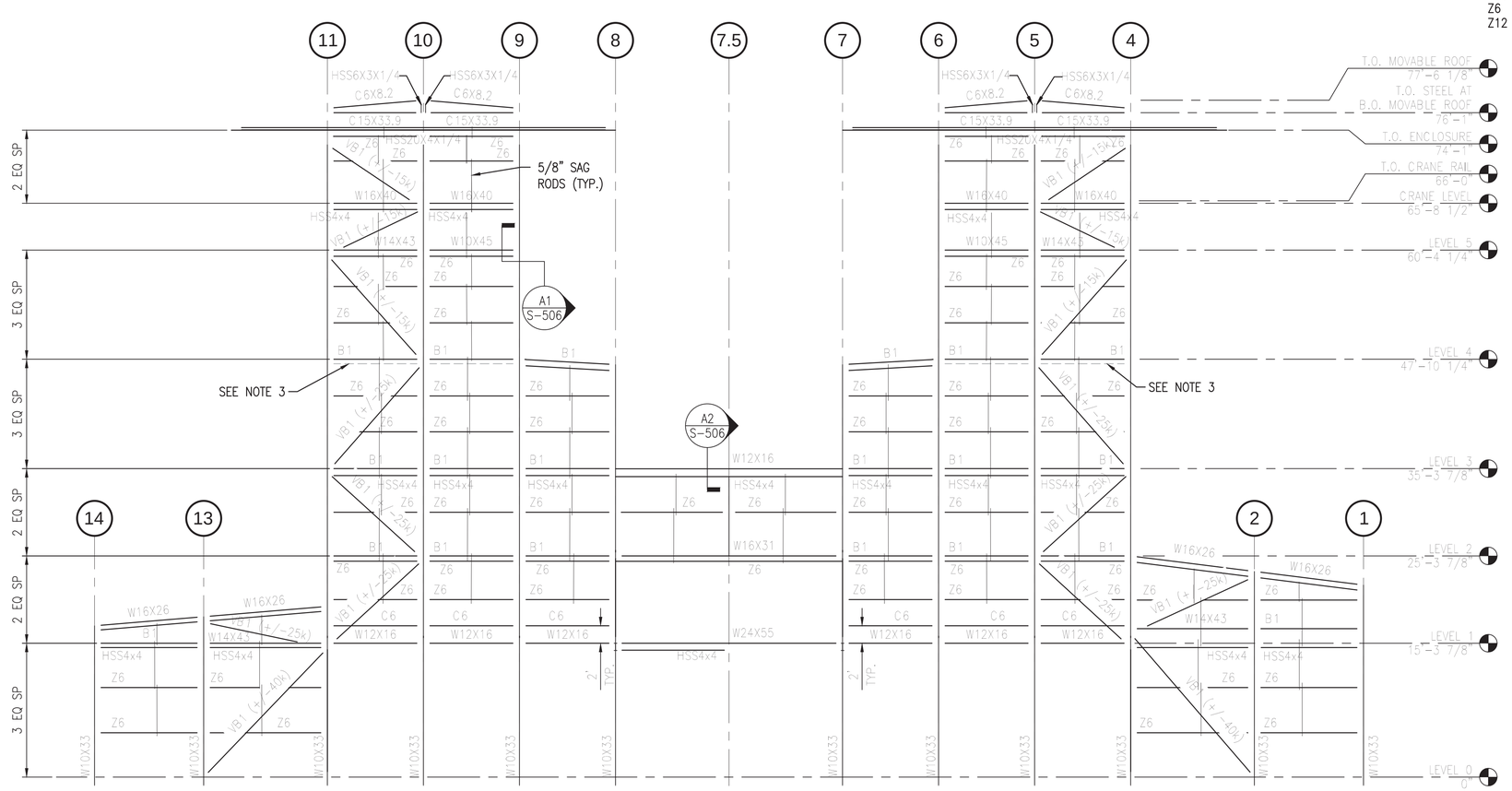

FRAMING ELEVATION AT COLUMN LINE D

SCALE: 1/8" = 1'-0"

S-101A, S-102A

A1

Scale: 1/8" = 1'-0"

SYM	DESCRIPTION	DATE	APPR
0	ISSUED FOR CONSTRUCTION	10/28/2016	CBC

NAVFAC

STATE OF MAINE SAMUEL J. THOMAS No. 12734 LICENSED PROFESSIONAL ENGINEER 10/28/16

SEAL

Colby Company engineering

A/E INFO

APPROVED David W. Thurnfield

FOR COMMANDER NAVFAC

ACTIVITY
TIM FISHER
C. 2370.6 BRANCH HEAD

SATISFACTORY TO DATE 10/28/2016

DES SJT | DRW ERB | CHK CBC

PM/DM PETER STOCKLESS

BRANCH MANAGER IAN BODWELL

FEAD/PM&E AMIN BAHROUR

FIRE PROTECTION PATRICK BAKAJ

DEPARTMENT OF THE NAVY
NAVAL FACILITIES ENGINEERING COMMAND
PUBLIC WORKS DEPARTMENT - MAINE

NAVAL FACILITIES ENGINEERING COMMAND – MID-ATLANTIC
NAVAL SHIPYARD - PORTSMOUTH NH

PORTSMOUTH NAVAL SHIPYARD
KITTERY, ME

DRY DOCK #1 DEFUELING COMPLEX
M-140 COMPLEX

FRAMING ELEVATION AT COLUMN LINE D

EPROJECT NO.: 1363311

CONSTR. CONTR. NO. N40085-17-C-5002

NAVFAC DRAWING NO. 12734822

SHEET 39 OF 188

S-202A | DD1-16-903

DRAWFORM REVISION: 10 OCTOBER 2014

10/28/2016 6:35:56 AM X:\297 PORTSMOUTH NAVAL SHIPYARD\297.005.001 - DD#1 DEFUELING COMPLEX DESIGN\DRAWINGS\M140\SHEETS\S-202A.DWG

NOTES

1. SEE SHEET S-001 FOR GENERAL NOTES.

FRAMING LEGEND

B1	DENOTES W10x12
VB1	DENOTES HSS6X6X3/8
Z6	DENOTES 6x2 1/2 Z-GIRT
Z8	DENOTES 8x3 Z-GIRT
Z12	DENOTES 12x3 1/2 Z-GIRT

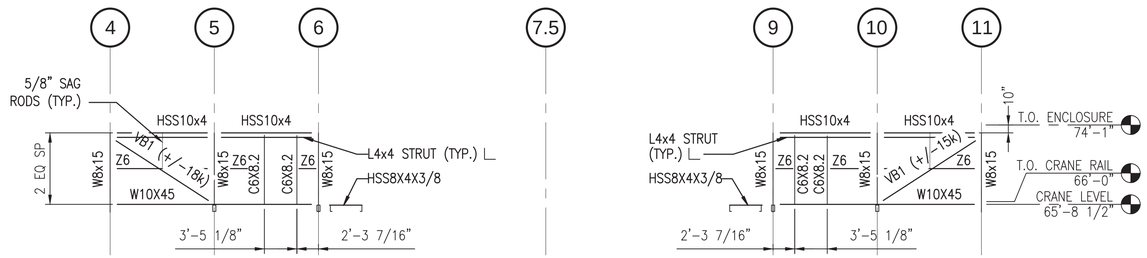

FRAMING ELEVATION AT COLUMN LINE AA

SCALE: 1/8" = 1'-0"

S-106, S-107 (C2)

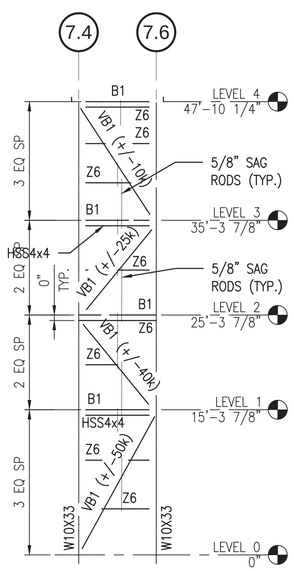

FRAMING ELEVATION AT COLUMN LINE CC

SCALE: 1/8" = 1'-0"

S-100, S-103, S-104, S-105 (A1)

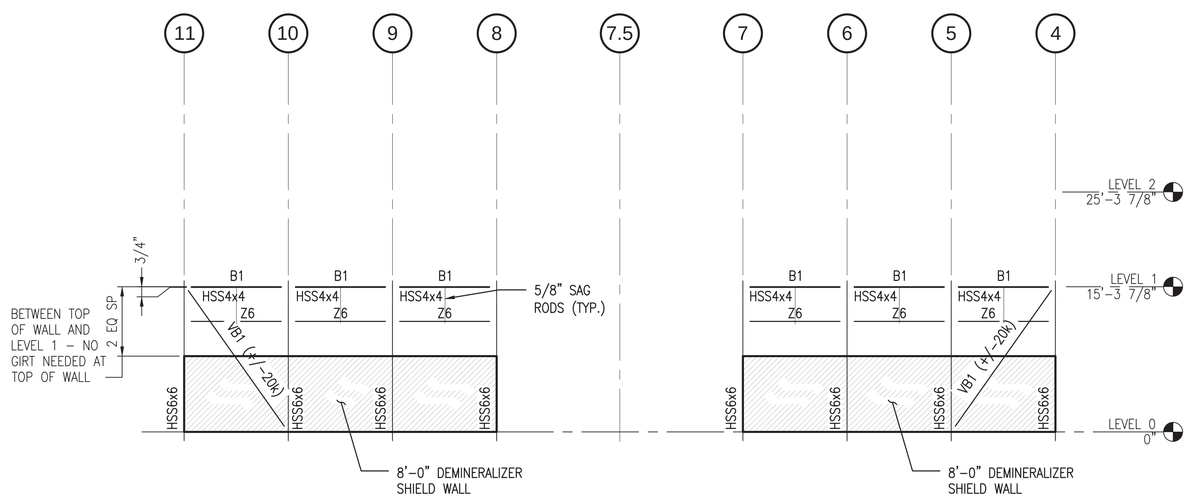

FRAMING ELEVATION AT COLUMN LINE E - WITHOUT STORAGE ENCLOSURE

SCALE: 1/8" = 1'-0"

S-101 (A2)

0 4' 8' 16'
Scale: 1/8" = 1'-0"

SYM	DESCRIPTION	DATE	APPR
0	ISSUED FOR CONSTRUCTION	10/28/2016	CBC

NAVFAC

STATE OF MAINE
SAMUEL J. THOMAS
No. 12734
LICENSED PROFESSIONAL ENGINEER
10/28/16
SEAL

Colby Company engineering
A/E INFO

APPROVED
David W. Trumfield
FOR COMMANDER NAVFAC

ACTIVITY
TIM FISHER
C. 2370.6 BRANCH HEAD

SATISFACTORY TO DATE 10/28/2016
DES DS DRW ERB CHK CBC
PMDM PETER STOCKLESS
BRANCH MANAGER IAN BODWELL
FEA/DP/M&E AMIN BAHROUR
FIRE PROTECTION PATRICK BAKAJ

DEPARTMENT OF THE NAVY
NAVAL FACILITIES ENGINEERING COMMAND
PUBLIC WORKS DEPARTMENT - MAINE

NAVAL FACILITIES ENGINEERING COMMAND ~ MID-ATLANTIC
NAVAL SHIPYARD - PORTSMOUTH, NH

PORTSMOUTH NAVAL SHIPYARD
KITTERY, ME
DRY DOCK #1 DEFUELING COMPLEX
M-140 COMPLEX

FRAMING ELEVATION AT COLUMN LINES CC, E, AND G (NO STORAGE ENCLOSURE)

EPROJECT NO.: 1363311
CONSTR. CONTR. NO. N40085-17-C-5002
NAVFAC DRAWING NO. 12734823
SHEET 40 OF 188
S-203 DD1-16-904

DRAWFORM REVISION: 10 OCTOBER 2014

10/28/2016 6:36:00 AM X:\297 PORTSMOUTH NAVAL SHIPYARD\297.005.001 - DD#1 DEFUELING COMPLEX DESIGN\DRAWINGS\M140\SHEETS\S-203.DWG

NOTES

1. SEE SHEET S-001 FOR GENERAL NOTES.

FRAMING LEGEND

B1	DENOTES W10x12
VB1	DENOTES HSS6X6X3/8
Z6	DENOTES 6x2 1/2 Z-GIRT
Z12	DENOTES 12x3 1/2 Z-GIRT
HSS4x4	DENOTES HSS4x4X1/4 HEADER GIRT

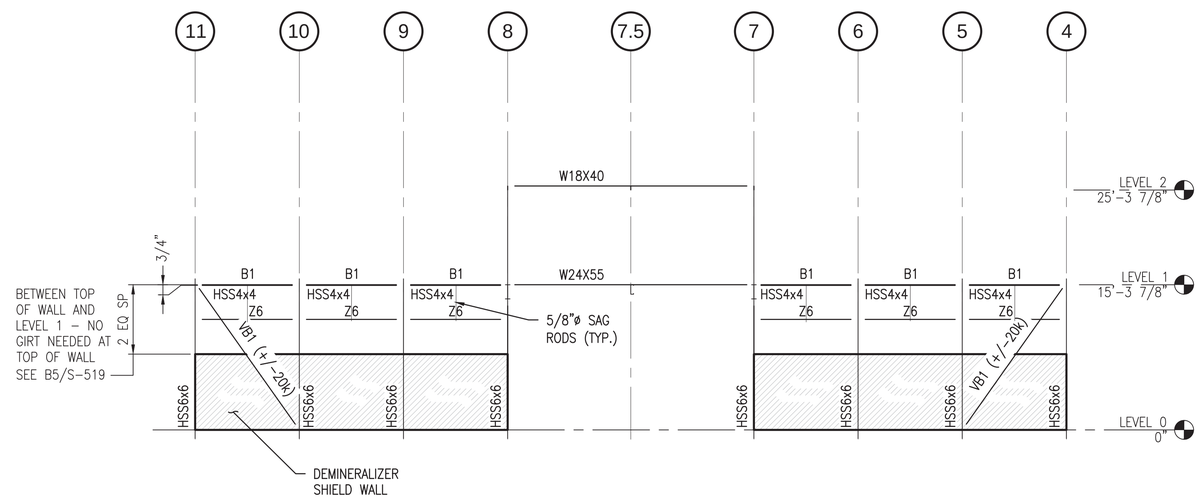

FRAMING ELEVATION AT COLUMN LINE E

SCALE: 1/8" = 1'-0"

S-101A, S-102A (A2)

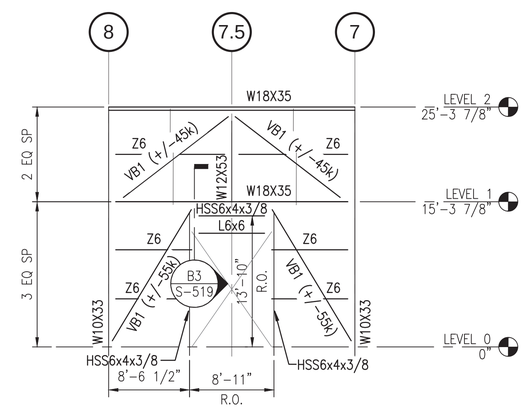

FRAMING ELEVATION AT COLUMN LINE G

SCALE: 1/8" = 1'-0"

S-101A, S-102A (A4)

0 4' 8' 16'
Scale: 1/8" = 1'-0"

SYM	DESCRIPTION	DATE	APPR
0	ISSUED FOR CONSTRUCTION	10/28/2016	CBC

NAVFAC

STATE OF MAINE
SAMUEL J. THOMAS
No. 13486
LICENSED PROFESSIONAL ENGINEER
10/28/16
SEAL

Colby Company engineering
A/E INFO

APPROVED
David W. Thurnfield
FOR COMMANDER NAVFAC

ACTIVITY
TIM FISHER
C. 2370.6 BRANCH HEAD

SATISFACTORY TO DATE 10/28/2016

DES DS DRW ERB CHK CBC

PMDM PETER STOCKLESS

BRANCH MANAGER IAN BODWELL

FEA/PM&E AMIN BAHROUR

FIRE PROTECTION PATRICK BAKAJ

DEPARTMENT OF THE NAVY
NAVAL FACILITIES ENGINEERING COMMAND
PUBLIC WORKS DEPARTMENT - MAINE

NAVAL FACILITIES ENGINEERING COMMAND ~ MID-ATLANTIC
NAVAL SHIPYARD - PORTSMOUTH, NH

PORTSMOUTH NAVAL SHIPYARD
KITTERY, ME

DRY DOCK #1 DEFUELING COMPLEX
M-140 COMPLEX

FRAMING ELEVATION AT COLUMN LINES CC, E, AND G

EPROJECT NO.: 1363311

CONSTR. CONTR. NO.
N40085-17-C-5002

NAVFAC DRAWING NO.
12734824

SHEET 41 OF 188

S-203A | DD1-16-905

DRAWFORM REVISION: 10 OCTOBER 2014

10/28/2016 6:36:04 AM X:\297 PORTSMOUTH NAVAL SHIPYARD\297.005.001 - DD#1 DEFUELING COMPLEX DESIGN\DRAWINGS\M140\SHEETS\S-203A.DWG

NOTES

1. SEE SHEET S-001 FOR GENERAL NOTES.

FRAMING LEGEND

B1	DENOTES W10x12
VB1	DENOTES HSS6X6X3/8
Z6	DENOTES 6x2 1/2 Z-GIRT
Z12	DENOTES 12x3 1/2 Z-GIRT
±X k	INDICATES AXIAL TRANSFER FORCE IN MEMBER

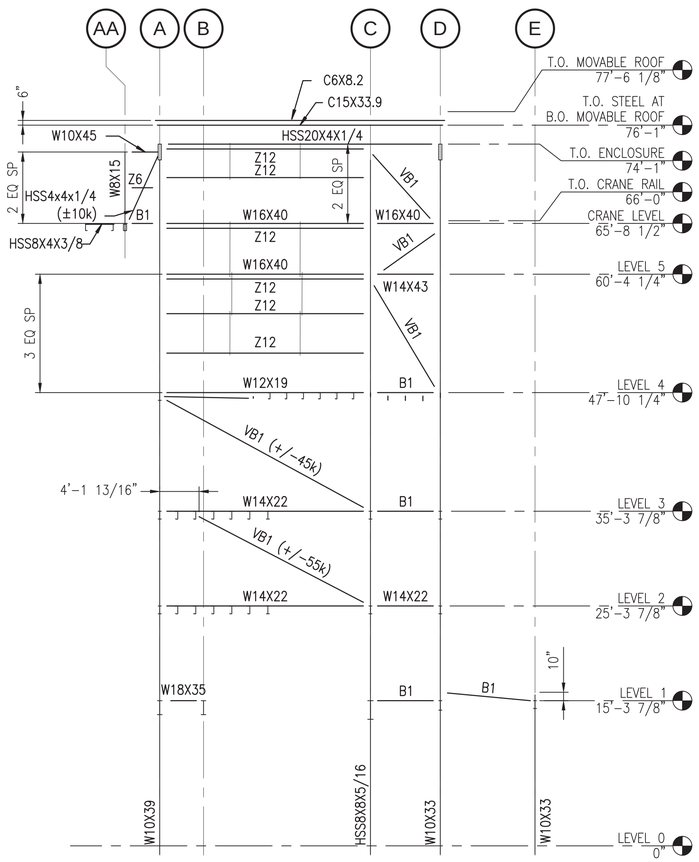

FRAMING ELEVATION AT COLUMN LINE 6

SCALE: 1/8" = 1'-0" S-101, S-101A, S-102, S-102A, S-103, S-104, S-105, S-106, S-107, S-108, S-109 (A1)

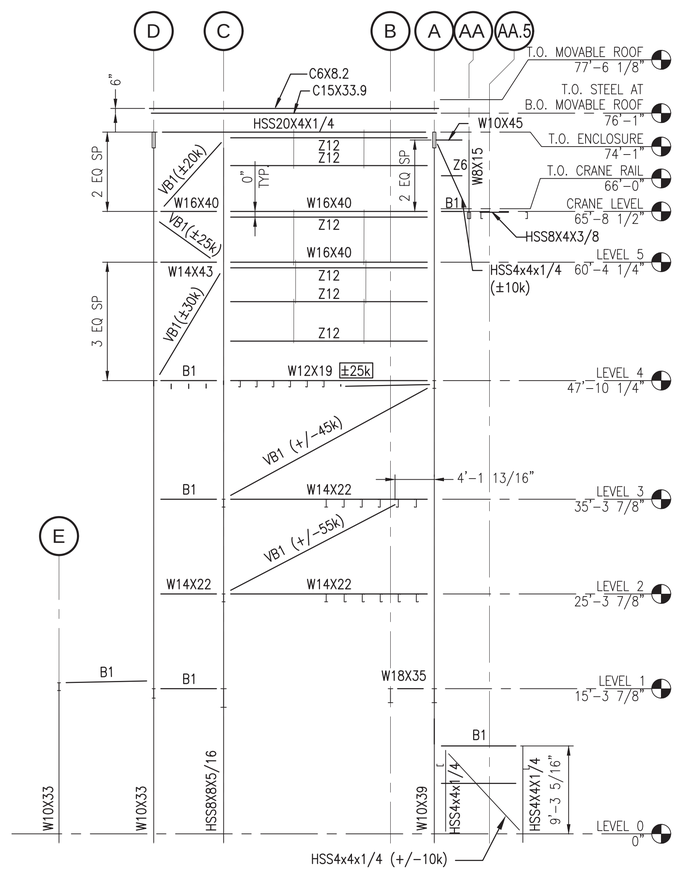

FRAMING ELEVATION AT COLUMN LINE 9

SCALE: 1/8" = 1'-0" S-101, S-101A, S-102, S-102A, S-103, S-104, S-105, S-106, S-107, S-108, S-109 (A2)

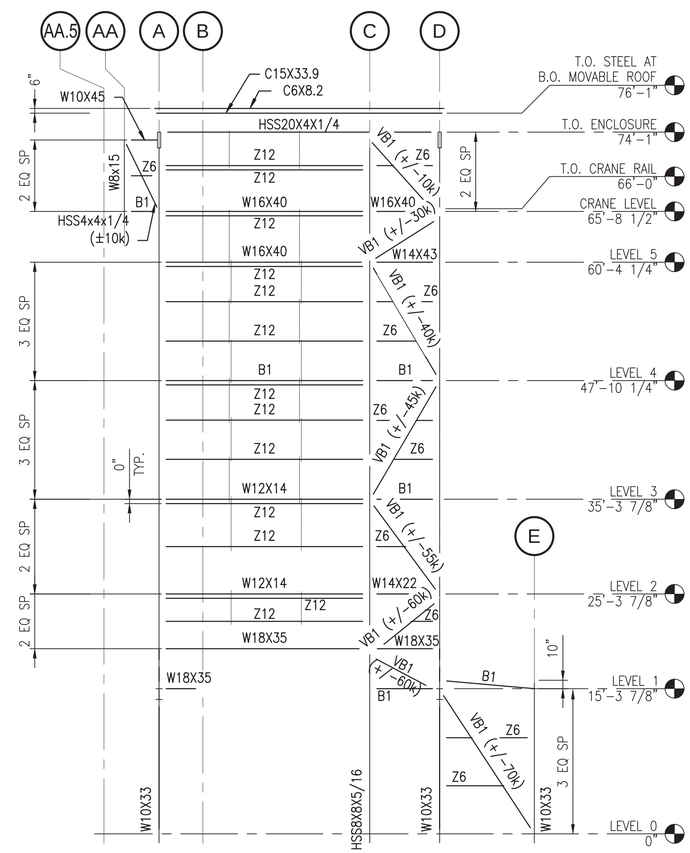

FRAMING ELEVATION AT COLUMN LINE 11

SCALE: 1/8" = 1'-0" S-101, S-101A, S-102, S-102A, S-103, S-104, S-105, S-106, S-107, S-108, S-109 (A4)

0 4' 8' 16'
Scale: 1/8" = 1'-0"

SYM	DESCRIPTION	DATE	APPR
0	ISSUED FOR CONSTRUCTION	10/28/2016	CBC

NAVFAC

STATE OF MAINE
SAMUEL J. THOMAS
No. 13855
LICENSED PROFESSIONAL ENGINEER
10/28/16
SEAL

Colby Company engineering
A/E INFO

APPROVED
David W. Trumfield
FOR COMMANDER NAVFAC

ACTIVITY
TIM FISHER
C. 2370.6 BRANCH HEAD

SATISFACTORY TO DATE 10/28/2016
DES SJT DRW ERB CHK CBC
PMDM PETER STOCKLESS
BRANCH MANAGER IAN BODWELL
FEA/PM&E AMIN BAHROUR
FIRE PROTECTION PATRICK BAKAJ

DEPARTMENT OF THE NAVY
NAVAL FACILITIES ENGINEERING COMMAND
PUBLIC WORKS DEPARTMENT MAINE

NAVAL FACILITIES ENGINEERING COMMAND ~ MID-ATLANTIC
NAVAL SHIPYARD, PORTSMOUTH, NH

PORTSMOUTH NAVAL SHIPYARD
KITTERY, ME

DRY DOCK #1 DEFUELING COMPLEX
M-140 COMPLEX

FRAMING ELEVATIONS AT COLUMN LINES 6, 9, AND 11

EPROJECT NO.: 1363311
CONSTR. CONTR. NO. N40085-17-C-5002
NAVFAC DRAWING NO. 12734825
SHEET 42 OF 188

S-204 | DD1-16-906

DRAWFORM REVISION: 10 OCTOBER 2014

10/28/2016 6:36:09 AM X:\297 PORTSMOUTH NAVAL SHIPYARD\297.005.001 - DD#1 DEFUELING COMPLEX DESIGN\DRAWINGS\M140\SHEETS\S-204.DWG

NOTES

1. SEE SHEET S-001 FOR GENERAL NOTES.

FRAMING LEGEND

B1	DENOTES W10x12
VB1	DENOTES HSS6X6X3/8
Z6	DENOTES 6x2 1/2 Z-GIRT
Z12	DENOTES 12x3 1/2 Z-GIRT
+/-k	TRANSFER FORCE

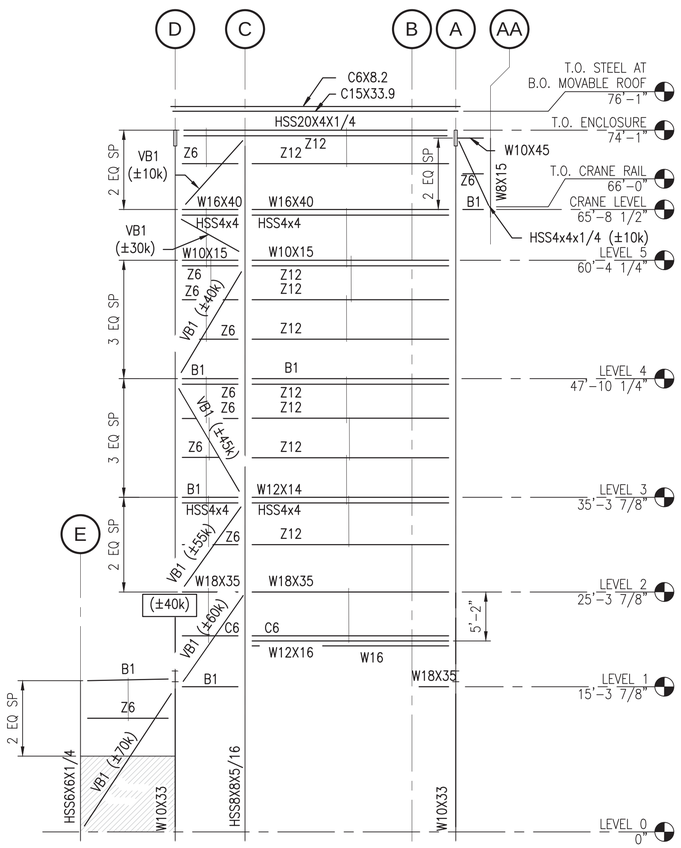

FRAMING ELEVATION AT COLUMN LINE 4

SCALE: 1/8" = 1'-0" S-101, S-101A, S-102, S-102A, S-103, S-104, S-105, S-106, S-107, S-108, S-109 (A1)

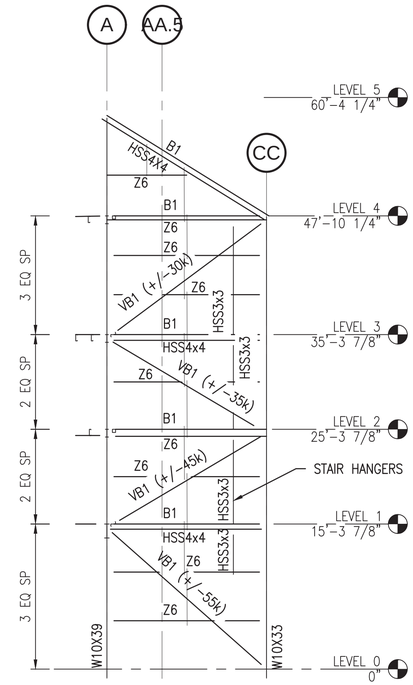

FRAMING ELEVATION AT COLUMN LINE 7.4

SCALE: 1/8" = 1'-0" S-100, S-103, S-104, S-105 (B3)

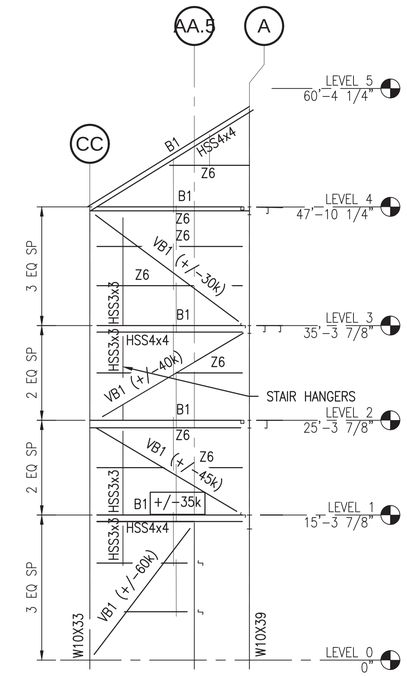

FRAMING ELEVATION AT COLUMN LINE 7.6

SCALE: 1/8" = 1'-0" S-100, S-103, S-104, S-105 (B4)

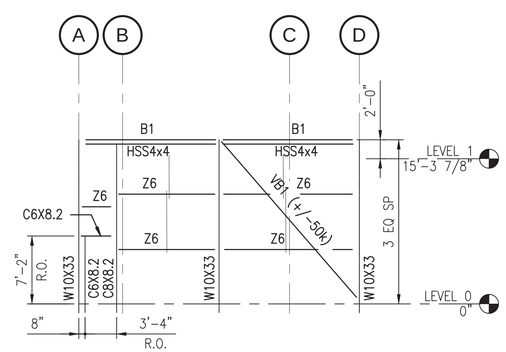

FRAMING ELEVATION AT COLUMN LINE 14

SCALE: 1/8" = 1'-0" S-100 (A3)

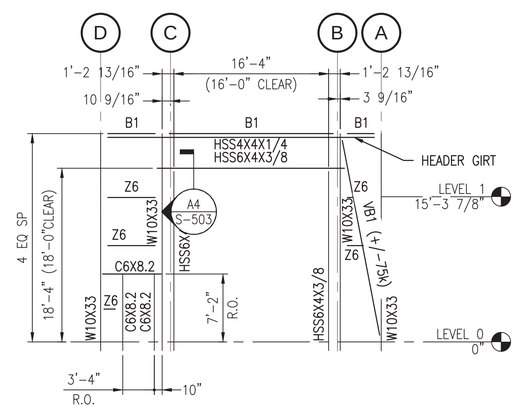

FRAMING ELEVATION AT COLUMN LINE 1

SCALE: 1/8" = 1'-0" S-100 (A4)

0 4' 8' 16'
Scale: 1/8" = 1'-0"

SYM	DESCRIPTION	DATE	APPR
0	ISSUED FOR CONSTRUCTION	10/28/2016	CBC

NAVFAC

STATE OF MAINE SAMUEL J. THOMAS No. 12734826 LICENSED PROFESSIONAL ENGINEER 10/28/16 SEAL

Colby Company engineering

A/E INFO

APPROVED David W. Thurnfield
FOR COMMANDER NAVFAC

ACTIVITY
TIM FISHER
C. 2370.6 BRANCH HEAD

SATISFACTORY TO DATE 10/28/2016

DES	SJT	DRW ERB	CHK CBC

PM/DM	PETER STOCKLESS
BRANCH MANAGER	IAN BODWELL
FEAD/PM&E	AMIN BAHROUR
FIRE PROTECTION	PATRICK BAKAJ

DEPARTMENT OF THE NAVY
NAVAL FACILITIES ENGINEERING COMMAND
PUBLIC WORKS DEPARTMENT - MAINE

NAVAL FACILITIES ENGINEERING COMMAND – MID-ATLANTIC
NAVAL SHIPYARD - PORTSMOUTH, NH

PORTSMOUTH NAVAL SHIPYARD
KITTERY, ME

DRY DOCK #1 DEFUELING COMPLEX
M-140 COMPLEX

FRAMING ELEVATIONS AT COLUMN LINES 1, 4, 14, 7.4, AND 7.6

EPROJECT NO.: 1363311

CONSTR. CONTR. NO. N40085-17-C-5002

NAVFAC DRAWING NO. 12734826

SHEET 43 OF 188

S-205 | DD1-16-907

DRAWFORM REVISION: 10 OCTOBER 2014

10/28/2016 6:36:13 AM X:\297 PORTSMOUTH NAVAL SHIPYARD\297.005.001 - DD#1 DEFUELING COMPLEX\DESIGN\DRAWINGS\M140\SHEETS\S-205.DWG

NOTES

1. SEE SHEET S-001 FOR GENERAL NOTES.

FRAMING LEGEND

B1	DENOTES W10x12
VB1	DENOTES HSS6X6X3/8

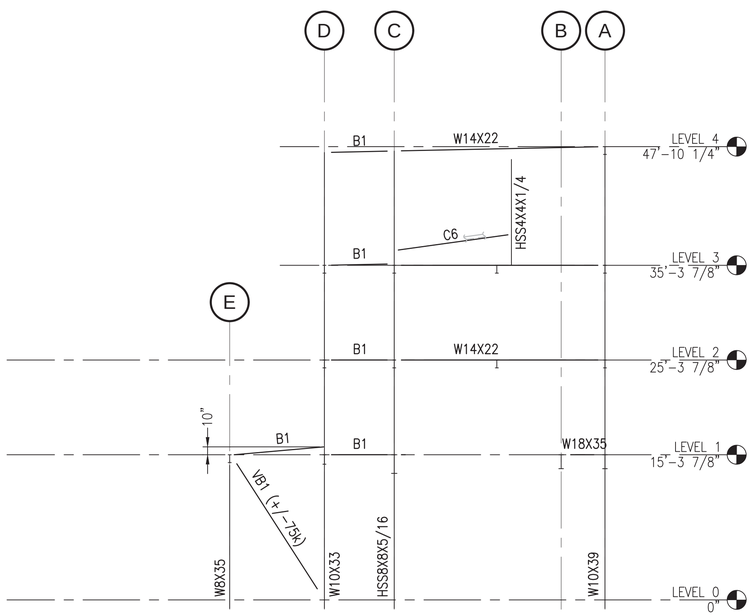

FRAMING ELEVATION AT COLUMN LINE 7 - WITHOUT STORAGE ENCLOSURE (A1)

SCALE: 1/8" = 1'-0"

S-101, S-102

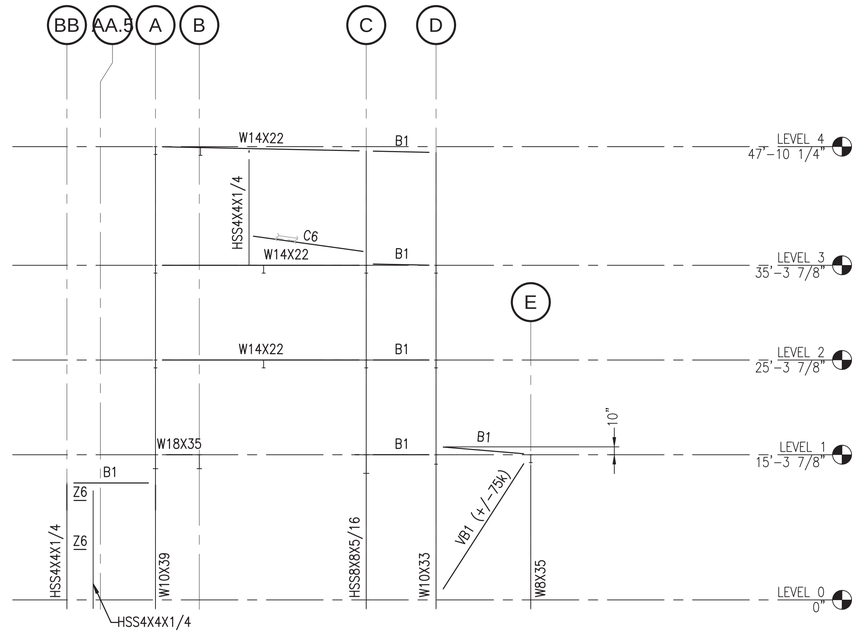

FRAMING ELEVATION AT COLUMN LINE 8 - WITHOUT STORAGE ENCLOSURE (A3)

SCALE: 1/8" = 1'-0"

S-101, S-102

0 4' 8' 16'
Scale: 1/8" = 1'-0"

SYM	DESCRIPTION	DATE	APPR
0	ISSUED FOR CONSTRUCTION	10/28/2016	CBC

NAVFAC

STATE OF MAINE
SAMUEL J. THOMAS
No. 13485
LICENSED PROFESSIONAL ENGINEER
10/28/16
SEAL

Colby Company engineering
A/E INFO

APPROVED
David W. Thurnfield
FOR COMMANDER NAVFAC

ACTIVITY
TIM FISHER
C. 2370.6 BRANCH HEAD

SATISFACTORY TO DATE 10/28/2016

DES SJT | DRW ERB | CHK CBC

PMDM PETER STOCKLESS
BRANCH MANAGER IAN BODWELL
FEA/DPM&E AMIN BAHROUR
FIRE PROTECTION PATRICK BAKAJ

DEPARTMENT OF THE NAVY
NAVAL FACILITIES ENGINEERING COMMAND
PUBLIC WORKS DEPARTMENT - MAINE

NAVAL FACILITIES ENGINEERING COMMAND ~ MID-ATLANTIC
NAVAL SHIPYARD - PORTSMOUTH, NH

PORTSMOUTH NAVAL SHIPYARD
KITTERY, ME

DRY DOCK #1 DEFUELING COMPLEX
M-140 COMPLEX

FRAMING ELEVATIONS AT COLUMN LINES 7 AND 8 (NO STORAGE ENCLOSURE)

EPROJECT NO.: 1363311

CONSTR. CONTR. NO.
N40085-17-C-5002

NAVFAC DRAWING NO.
12734827

SHEET 44 OF 188

S-206 | DD1-16-908

DRAWFORM REVISION: 10 OCTOBER 2014

10/28/2016 6:36:17 AM X:\297 PORTSMOUTH NAVAL SHIPYARD\297.005.001 - DD#1 DEFUELING COMPLEX DESIGN\DRAWINGS\M140\SHEETS\S-206.DWG

NOTES

1. SEE SHEET S-001 FOR GENERAL NOTES.

FRAMING LEGEND

B1	DENOTES W10x12
VB1	DENOTES HSS6X6X3/8
+/-k	TRANSFER FORCE

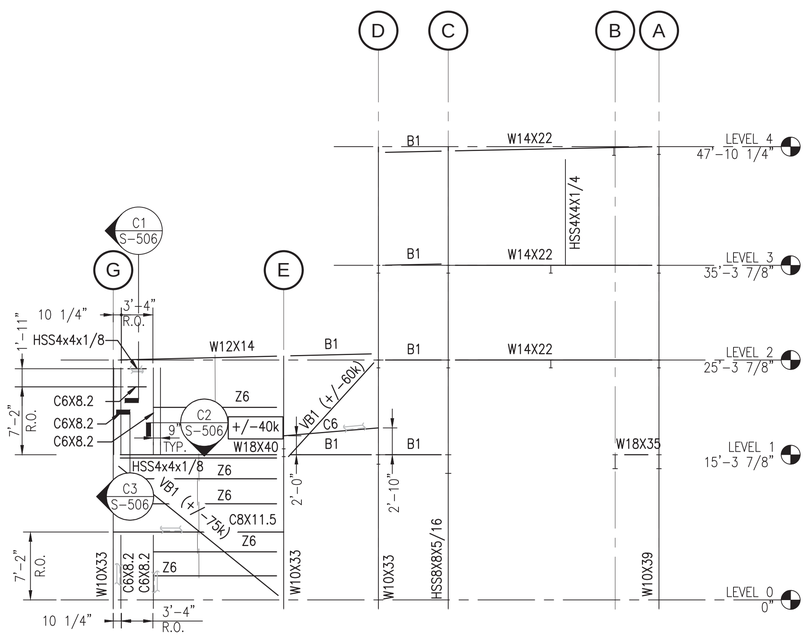

FRAMING ELEVATION AT COLUMN LINE 7

SCALE: 1/8" = 1'-0"

S-101A, S-102A (A1)

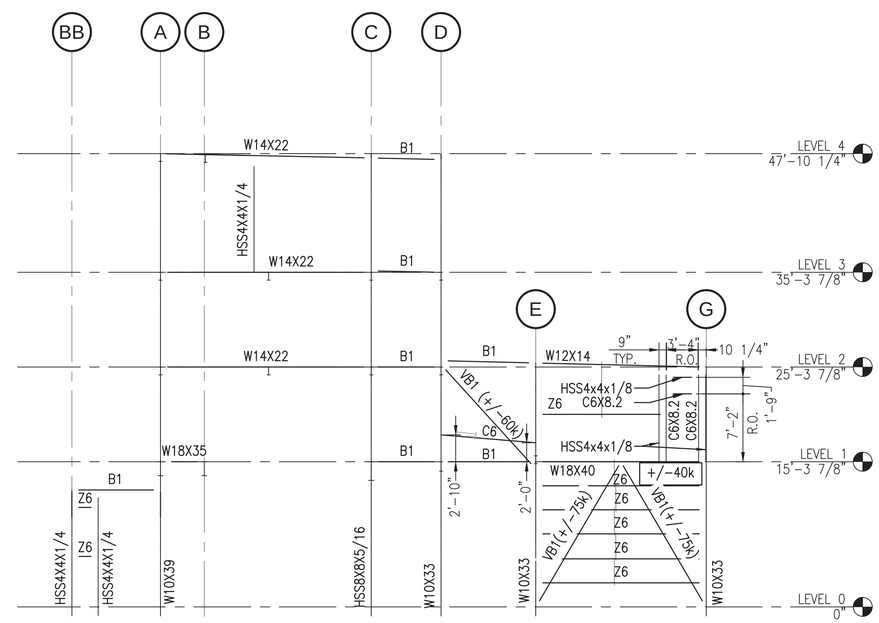

FRAMING ELEVATION AT COLUMN LINE 8

SCALE: 1/8" = 1'-0"

S-101A, S-102A (A3)

0 4' 8' 16'
Scale: 1/8" = 1'-0"

SYM	DESCRIPTION	DATE	APPR
0	ISSUED FOR CONSTRUCTION	10/28/2016	CBC

NAVFAC

STATE OF MAINE
SAMUEL J. THOMAS
No. 12828
LICENSED PROFESSIONAL ENGINEER
10/28/16
SEAL

Colby Company engineering
A/E INFO

APPROVED
David W. Thurnfield
FOR COMMANDER NAVFAC

ACTIVITY
TIM FISHER
C. 2370.6 BRANCH HEAD

SATISFACTORY TO DATE 10/28/2016

DES SJT | DRW ERB | CHK CBC

PMDM PETER STOCKLESS
BRANCH MANAGER IAN BODWELL
FEA/PM&E AMIN BAHROUR
FIRE PROTECTION PATRICK BAKAJ

DEPARTMENT OF THE NAVY
NAVAL FACILITIES ENGINEERING COMMAND
PUBLIC WORKS DEPARTMENT - MAINE

NAVAL FACILITIES ENGINEERING COMMAND ~ MID-ATLANTIC
NAVAL SHIPYARD - PORTSMOUTH, NH

PORTSMOUTH NAVAL SHIPYARD
KITTERY, ME
DRY DOCK #1 DEFUELING COMPLEX
M-140 COMPLEX

FRAMING ELEVATIONS AT COLUMN LINES 7 AND 8

EPROJECT NO.: 1363311

CONSTR. CONTR. NO.
N40085-17-C-5002

NAVFAC DRAWING NO.
12734828

SHEET 45 OF 188

S-206A | DD1-16-909

DRAWFORM REVISION: 10 OCTOBER 2014

10/28/2016 6:36:21 AM X:\297 PORTSMOUTH NAVAL SHIPYARD\297.005.001 - DD#1 DEFUELING COMPLEX DESIGN\DRAWINGS\M140\SHEETS\S-206A.DWG

NOTES

1. SEE SHEET S-001 FOR GENERAL NOTES.
2. FRAMES FOR MECHANICAL PENETRATION.

FRAMING LEGEND

B1	DENOTES W10x12
VB1	DENOTES HSS6X6X1/2
Z6	DENOTES 6x2 1/2 Z-GIRT
Z12	DENOTES 12x3 1/2 Z-GIRT
C6	DENOTES C6x8.2 - INTERIOR COUNTERPART TO MECHANICAL DUCT SLEEVE SUPPORTS - SEE S-512
LL4X4X1/4	ANGLE AT INTERIOR FOR STUDLESS WALL SYSTEM STACK JOINT - SEE B2/S-519

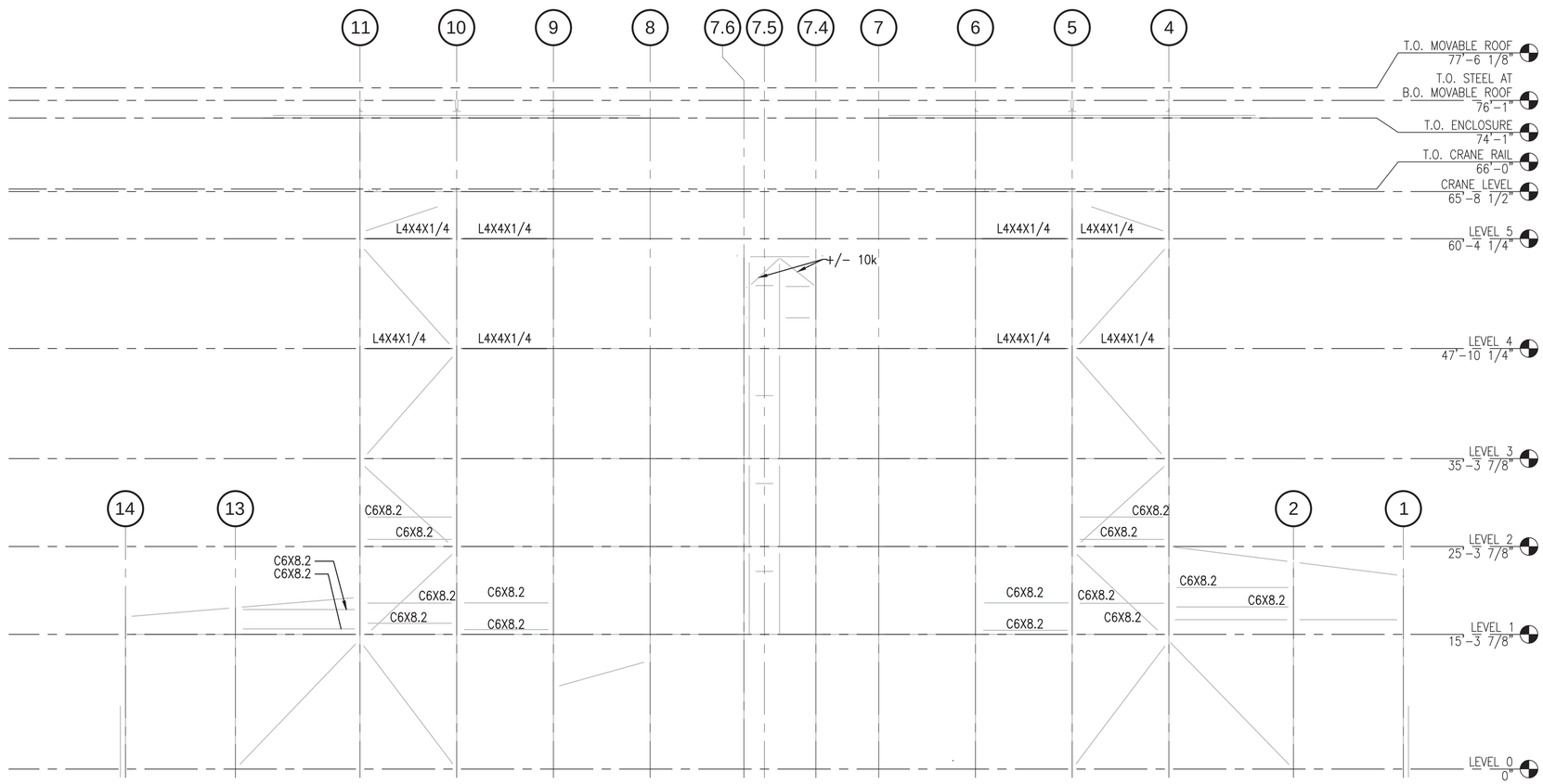

INTERIOR FRAMING ELEVATION AT COLUMN LINE A

SCALE: 1/8" = 1'-0"

S-101, S-101A, S-102, S-102A, S-103, S-104, S-105, S-106, S-107, S-108, S-109

A1

0 4' 8' 16'
Scale: 1/8" = 1'-0"

SYM	DESCRIPTION	DATE	APPR
0	ISSUED FOR CONSTRUCTION	10/28/2016	CBC

NAVFAC

STATE OF MAINE
SAMUEL J. THOMAS
No. 13455
LICENSED PROFESSIONAL ENGINEER
10/28/16
SEAL

Colby Company engineering
A/E INFO

APPROVED
David W. Thumfuld
FOR COMMANDER NAVFAC

ACTIVITY
TIM FISHER
C. 2370.6 BRANCH HEAD

SATISFACTORY TO DATE 10/28/2016

DES	SJT	DRW	ERB	CHK	CBC

PM/DM PETER STOCKLESS
BRANCH MANAGER IAN BODWELL
FEA/PM&E AMIN BAHROUR
FIRE PROTECTION PATRICK BAKAJ

DEPARTMENT OF THE NAVY
NAVAL FACILITIES ENGINEERING COMMAND
PUBLIC WORKS DEPARTMENT - MAINE

NAVAL FACILITIES ENGINEERING COMMAND ~ MID-ATLANTIC
NAVAL SHIPYARD - PORTSMOUTH, NH

PORTSMOUTH NAVAL SHIPYARD
DRY DOCK #1 DEFUELING COMPLEX
M-140 COMPLEX
KITTERY, ME

INTERIOR FRAMING ELEVATION AT COLUMN LINE A

EPROJECT NO.: 1363311
CONSTR. CONTR. NO. N40085-17-C-5002
NAVFAC DRAWING NO. 12734829
SHEET 46 OF 188

S-211 | DD1-16-910

DRAWFORM REVISION: 10 OCTOBER 2014

10/28/2016 6:36:25 AM X:\297 PORTSMOUTH NAVAL SHIPYARD\297.005.001 - DD#1 DEFUELING COMPLEX DESIGN\DRAWINGS\M140\SHEETS\S-211.DWG

NOTES

1. SEE SHEET S-001 FOR GENERAL NOTES.

FRAMING LEGEND

B1	DENOTES W10x12
VB1	DENOTES HSS6X6X1/2
Z6	DENOTES 6x2 1/2 Z-GIRT
Z12	DENOTES 12x3 1/2 Z-GIRT

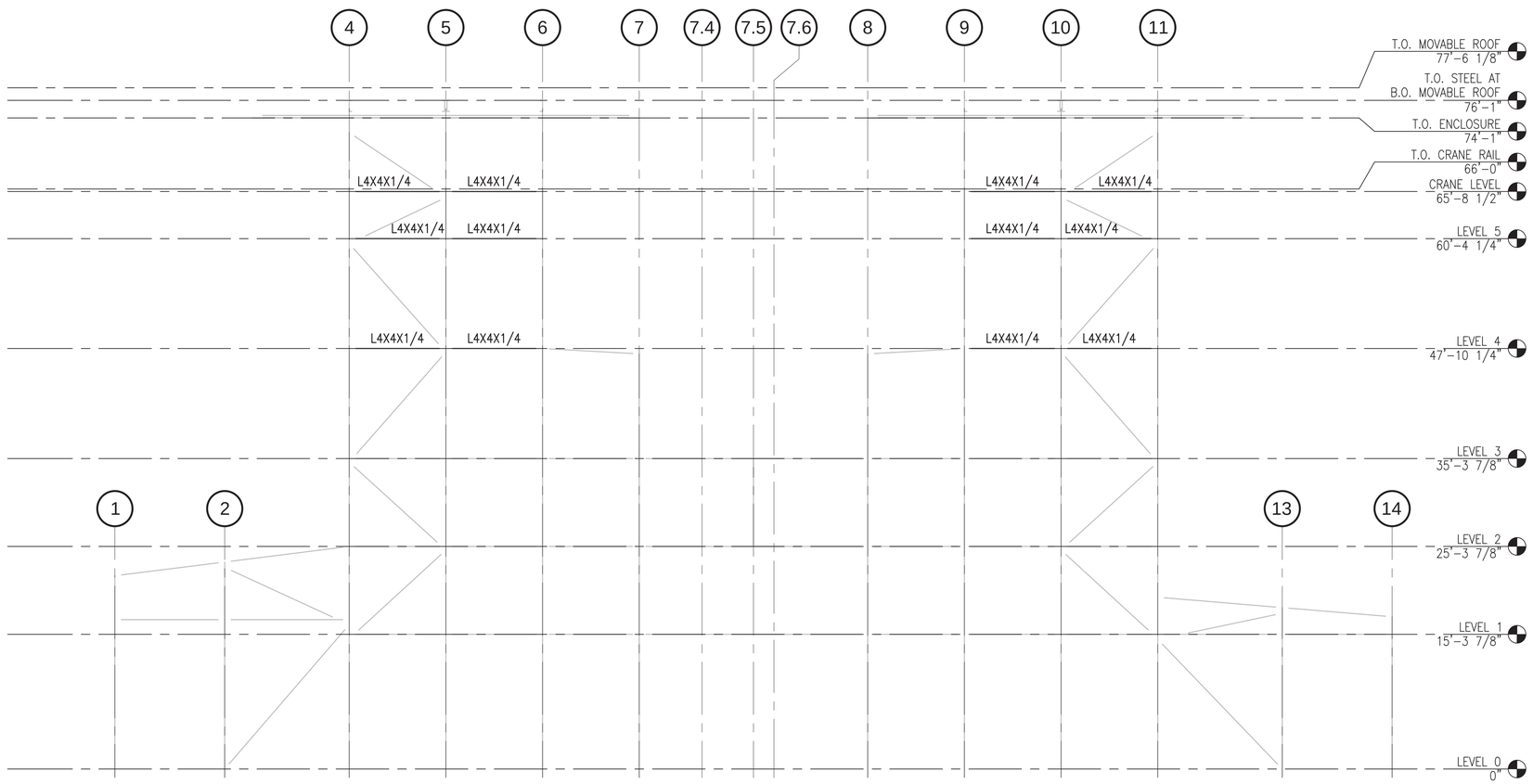

INTERIOR FRAMING ELEVATION AT COLUMN LINE D

SCALE: 1/8" = 1'-0"

S-101, S-101A, S-102, S-102A, S-103, S-104, S-105, S-106, S-107, S-108, S-109

A1

0 4' 8' 16'
Scale: 1/8" = 1'-0"

SYM	DESCRIPTION	DATE	APPR
0	ISSUED FOR CONSTRUCTION	10/28/2016	CBC

NAVFAC

STATE OF MAINE
SAMUEL J. THOMAS
No. 13855
LICENSED PROFESSIONAL ENGINEER
10/28/16
SEAL

Colby Company engineering
A/E INFO

APPROVED
FOR COMMANDER:
David W. Thumfeld
FOR COMMANDER NAVFAC

ACTIVITY
TIM FISHER
C. 2370.6 BRANCH HEAD

SATISFACTORY TO DATE 10/28/2016

DES	SJT	DRW	ERB	CHK	CBC

PM/DM PETER STOCKLESS
BRANCH MANAGER IAN BODWELL
FEA/DP/M&E AMIN BAHROUR
FIRE PROTECTION PATRICK BAKAJ

DEPARTMENT OF THE NAVY
NAVAL FACILITIES ENGINEERING COMMAND
PUBLIC WORKS DEPARTMENT - MAINE

NAVAL FACILITIES ENGINEERING COMMAND – MID-ATLANTIC
NAVAL SHIPYARD - PORTSMOUTH, NH

PORTSMOUTH NAVAL SHIPYARD
DRY DOCK #1 DEFUELING COMPLEX
M-140 COMPLEX
KITTERY, ME

INTERIOR FRAMING ELEVATION AT COLUMN LINE D

EPROJECT NO.: 1363311
CONSTR. CONTR. NO. N40085-17-C-5002
NAVFAC DRAWING NO. 12734830
SHEET 47 OF 188

S-212 DD1-16-911

DRAWFORM REVISION: 10 OCTOBER 2014

10/28/2016 6:36:29 AM X:\297 PORTSMOUTH NAVAL SHIPYARD\297.005.001 - DD#1 DEFUELING COMPLEX DESIGN\DRAWINGS\M140\SHEETS\S-212.DWG

NOTES

1. SEE SHEET S-001 FOR GENERAL NOTES.

FRAMING LEGEND

B1	DENOTES W10x12
VB1	DENOTES HSS6X6X3/8
Z6	DENOTES 6x2 1/2 Z-GIRT
Z12	DENOTES 12x3 1/2 Z-GIRT

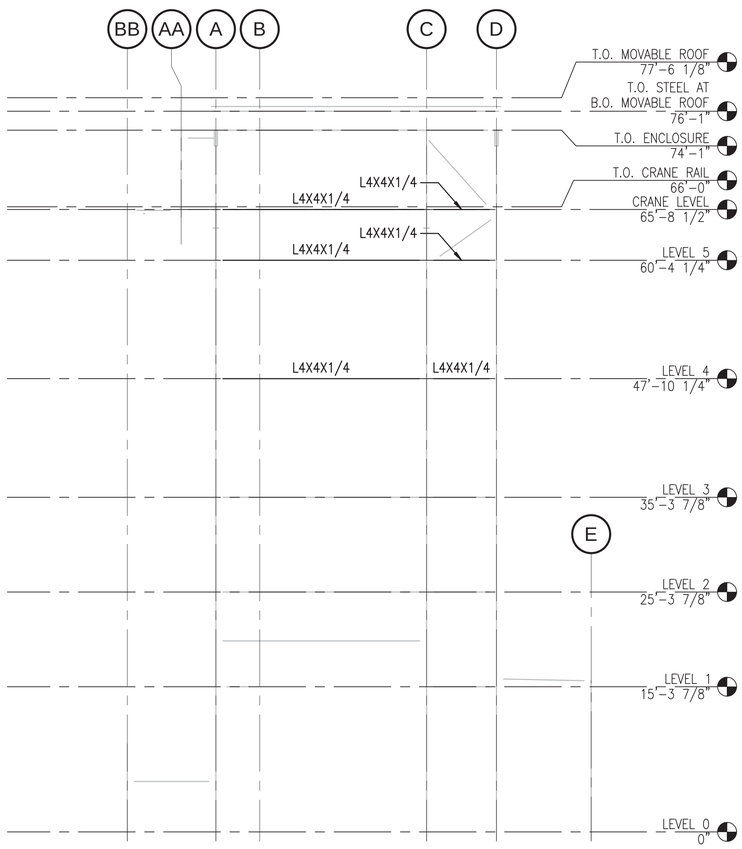

INTERIOR FRAMING ELEVATION AT COLUMN LINE 6 (A1)

SCALE: 1/8" = 1'-0" S-101, S-101A, S-102, S-102A, S-103, S-104, S-105, S-106, S-107, S-108, S-109

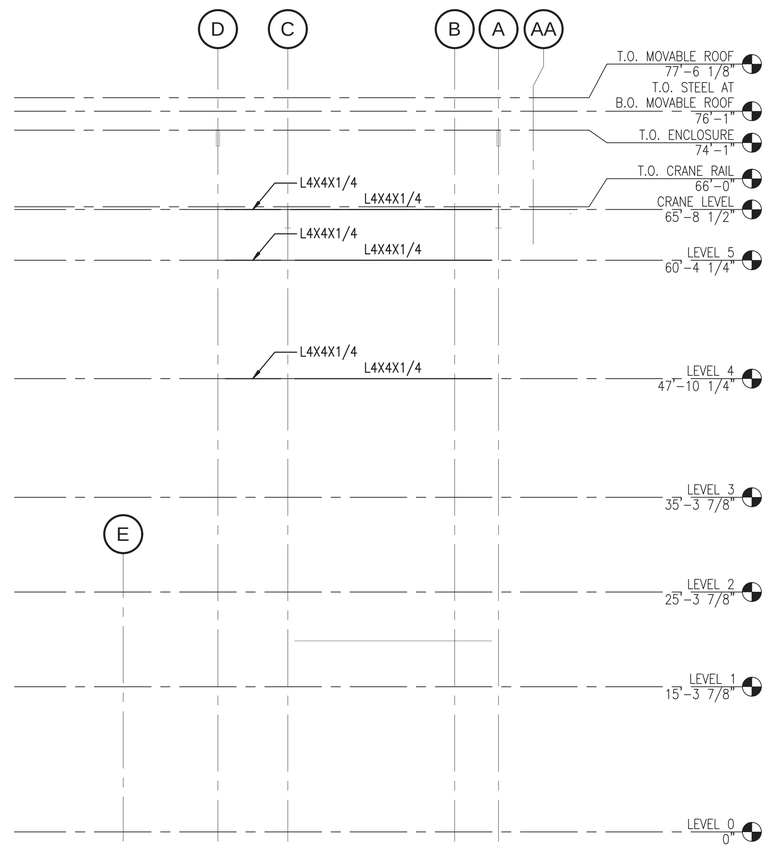

INTERIOR FRAMING ELEVATION AT COLUMN LINE 9 (A3)

SCALE: 1/8" = 1'-0" S-101, S-101A, S-102, S-102A, S-103, S-104, S-105, S-106, S-107, S-108, S-109

0 4' 8' 16'
Scale: 1/8" = 1'-0"

SYM	DESCRIPTION	DATE	APPR
0	ISSUED FOR CONSTRUCTION	10/28/2016	CBC

NAVFAC

STATE OF MAINE
SAMUEL J. THOMAS
No. 13453
LICENSED PROFESSIONAL ENGINEER
10/28/16
SEAL

Colby Company engineering
A/E INFO

APPROVED
David W. Thurnfield
FOR COMMANDER NAVFAC

ACTIVITY
TIM FISHER
C. 2370.6 BRANCH HEAD

SATISFACTORY TO DATE 10/28/2016
DES SJT DRW ERB CHK CBC
PMDM PETER STOCKLESS
BRANCH MANAGER IAN BODWELL
FEA/DPM&E AMIN BAHROUR
FIRE PROTECTION PATRICK BAKAJ

DEPARTMENT OF THE NAVY
NAVAL FACILITIES ENGINEERING COMMAND
PUBLIC WORKS DEPARTMENT - MAINE

NAVAL FACILITIES ENGINEERING COMMAND ~ MID-ATLANTIC
NAVAL SHIPYARD - PORTSMOUTH, NH

PORTSMOUTH NAVAL SHIPYARD
KITTERY, ME

DRY DOCK #1 DEFUELING COMPLEX
M-140 COMPLEX

INTERIOR FRAMING ELEVATIONS AT COLUMN LINES 6 & 9

EPROJECT NO.: 1363311
CONSTR. CONTR. NO. N40085-17-C-5002
NAVFAC DRAWING NO. 12734831
SHEET 48 OF 188

S-213 DD1-16-912

DRAWFORM REVISION: 10 OCTOBER 2014

10/28/2016 6:38:33 AM X:\297 PORTSMOUTH NAVAL SHIPYARD\297.005.001 - DD#1 DEFUELING COMPLEX DESIGN\DRAWINGS\M140\SHEETS\S-213.DWG

NOTES

1. SEE SHEET S-001 FOR GENERAL NOTES.

FRAMING LEGEND

B1	DENOTES W10x12
VB1	DENOTES HSS6X6X3/8
Z6	DENOTES 6x2 1/2 Z-GIRT
Z12	DENOTES 12x3 1/2 Z-GIRT

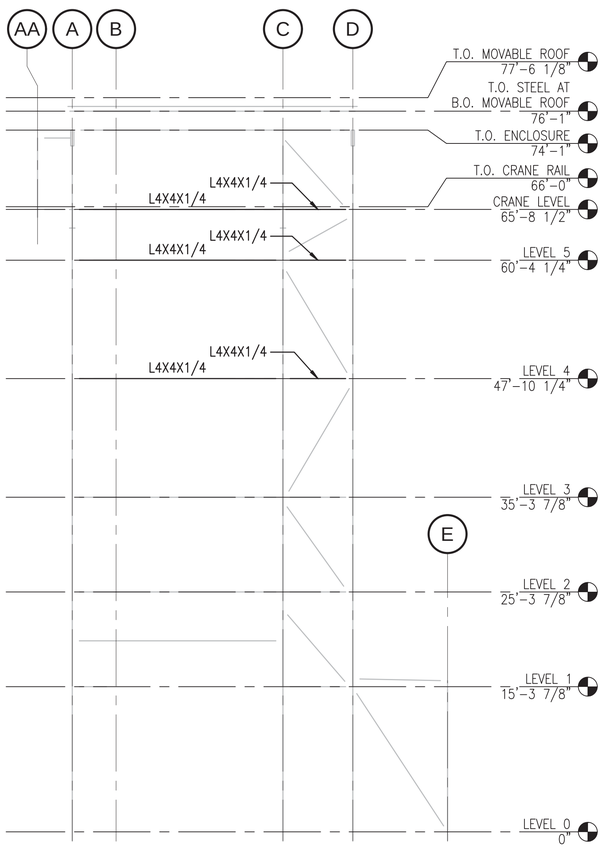

FRAMING ELEVATION AT COLUMN LINE 4 (A1)

SCALE: 1/8" = 1'-0" S-101, S-101A, S-102, S-102A, S-103, S-104, S-105, S-106, S-107, S-108, S-109

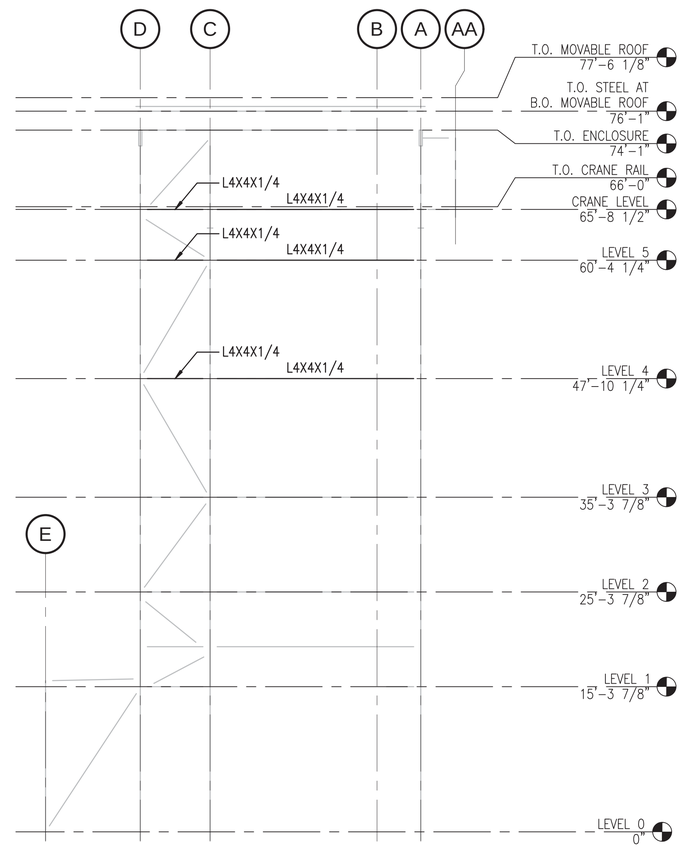

FRAMING ELEVATION AT COLUMN LINE 11 (A3)

SCALE: 1/8" = 1'-0" S-101, S-101A, S-102, S-102A, S-103, S-104, S-105, S-106, S-107, S-108, S-109

0 4' 8' 16'
Scale: 1/8" = 1'-0"

SYM	DESCRIPTION	DATE	APPR
0	ISSUED FOR CONSTRUCTION	10/28/2016	CBC

NAVFAC

STATE OF MAINE
SAMUEL J. THOMAS
No. 14885
LICENSED PROFESSIONAL ENGINEER
10/28/16
SEAL

Colby Company engineering
A/E INFO

APPROVED
David W. Trumfield
FOR COMMANDER NAVFAC

ACTIVITY
TIM FISHER
C. 2370.6 BRANCH HEAD

SATISFACTORY TO DATE 10/28/2016

DES SJT | DRW ERB | CHK CBC

PMDM PETER STOCKLESS
BRANCH MANAGER IAN BODWELL
FEA/PM&E AMIN BAHROUR
FIRE PROTECTION PATRICK BAKAJ

DEPARTMENT OF THE NAVY
NAVAL FACILITIES ENGINEERING COMMAND
PUBLIC WORKS DEPARTMENT - MAINE

NAVAL FACILITIES ENGINEERING COMMAND ~ MID-ATLANTIC
NAVAL SHIPYARD - PORTSMOUTH, NH

PORTSMOUTH NAVAL SHIPYARD
KITTERY, ME

DRY DOCK #1 DEFUELING COMPLEX
M-140 COMPLEX

INTERIOR FRAMING ELEVATIONS AT COLUMN LINES 4 & 11

EPROJECT NO.: 1363311

CONSTR. CONTR. NO.
N40085-17-C-5002

NAVFAC DRAWING NO.
12734832

SHEET 49 OF 188

S-214 | DD1-16-913

DRAWFORM REVISION: 10 OCTOBER 2014

10/28/2016 6:38:37 AM X:\297 PORTSMOUTH NAVAL SHIPYARD\297.005.001 - DD#1 DEFUELING COMPLEX DESIGN\DRAWINGS\M140\SHEETS\S-214.DWG

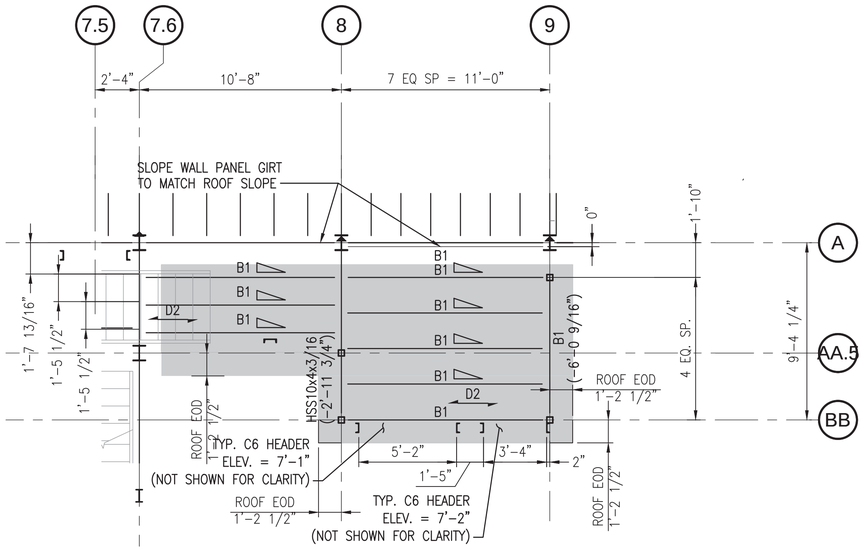

FRAMING PART PLAN AT TURNSTILE

SCALE: 1/4" = 1'-0" S-100 C1

T.O.S. EL. 15'-2 5/8" U.N.O.

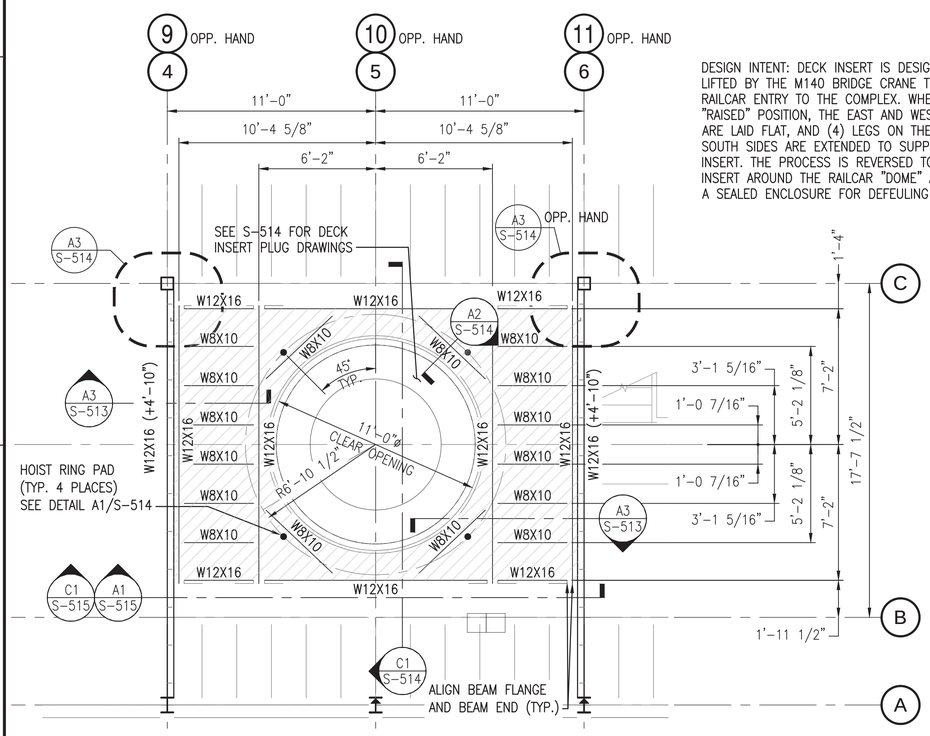

DESIGN INTENT: DECK INSERT IS DESIGNED TO BE LIFTED BY THE M140 BRIDGE CRANE TO PERMIT RAILCAR ENTRY TO THE COMPLEX. WHEN IN THE "RAISED" POSITION, THE EAST AND WEST WALLS ARE LAID FLAT, AND (4) LEGS ON THE NORTH AND SOUTH SIDES ARE EXTENDED TO SUPPORT THE INSERT. THE PROCESS IS REVERSED TO LOWER THE INSERT AROUND THE RAILCAR "DOME" AND PROVIDE A SEALED ENCLOSURE FOR DEFEULING OPERATIONS.

FRAMING PART PLAN AT DECK INSERT (LEVEL 1)

SCALE: 1/4" = 1'-0" S-101, S-101A A1

T.O.S. EL. 15'-2 5/8" U.N.O.

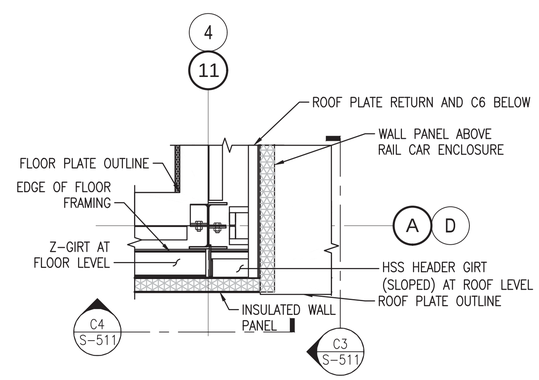

FRAMING PART PLAN AT RAILCAR ENCLOSURE CONNECTION

SCALE: 3/4" = 1'-0" S-101 A3

NOTES

1. SEE SHEET S-001 FOR GENERAL NOTES.
2. ALL HORIZONTAL BRACING = L4X4X1/4

FRAMING LEGEND

D1 DENOTES 19-W-4 STEEL BAR GRATING WTIH 1 1/4"x3/16" BEARING BARS, OVERLAID WITH 3/16" PLATE.

D2 DENOTES 1/4" STEEL PLATE, SEAL WELDED TO SUPPORT STEEL.

DX DENOTES DECK SPAN

— — DENOTES BRACING

B1 DENOTES W10x12

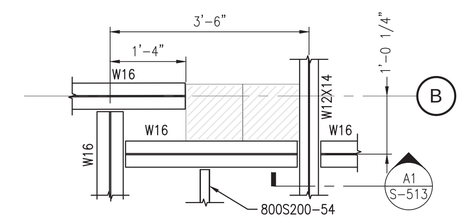

LEVEL 2 FRAMING PLAN AT TOOL COLUMN PEDESTAL LOCATION

SCALE: 3/4" = 1'-0" S-102 B5

LEVEL 3 FRAMING PLAN AT TOOL COLUMN PEDESTAL LOCATION

SCALE: 3/4" = 1'-0" S-103 B5

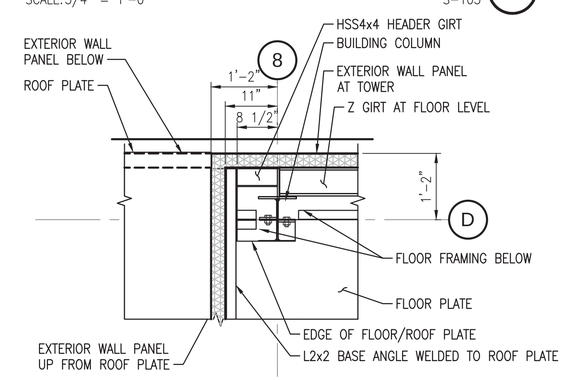

FRAMING PART PLAN AT LEVEL 3 ROOF

SCALE: 3/4" = 1'-0" S-103 A5

0 2' 4' 8'
Scale: 1/4" = 1'-0"

0 1' 2' 3'
Scale: 3/4" = 1'-0"

SYM	DESCRIPTION	DATE	APPR
0	ISSUED FOR CONSTRUCTION	10/28/2016	CBC

NAVFAC

STATE OF MAINE
SAMUEL J. THOMAS
No. 13455
LICENSED PROFESSIONAL ENGINEER
10/28/16
SEAL

Colby Company engineering
A/E INFO

APPROVED
David W. Thurnfeld
FOR COMMANDER NAVFAC

ACTIVITY
TIM FISHER
C. 2370.6 BRANCH HEAD

SATISFACTORY TO DATE 10/28/2016

DES SJT | DRW ERB | CHK CBC

PMDM PETER STOCKLESS

BRANCH MANAGER IAN BODWELL

FEAD/PM&E AMIN BAHROUR

FIRE PROTECTION PATRICK BAKAJ

DEPARTMENT OF THE NAVY
NAVAL FACILITIES ENGINEERING COMMAND
PUBLIC WORKS DEPARTMENT - MAINE

NAVAL FACILITIES ENGINEERING COMMAND ~ MID-ATLANTIC
NAVAL SHIPYARD - PORTSMOUTH, NH

PORTSMOUTH NAVAL SHIPYARD
KITTERY, ME

DRY DOCK #1 DEFUELING COMPLEX
M-140 COMPLEX

FRAMING PART PLANS

EPROJECT NO.: 1363311

CONSTR. CONTR. NO.
N40085-17-C-5002

NAVFAC DRAWING NO.
12734833

SHEET 50 OF 188

S-401 | DD1-16-914

DRAWFORM REVISION: 10 OCTOBER 2014

10/28/2016 6:36:42 AM X:\297 PORTSMOUTH NAVAL SHIPYARD\297.005.001 - DD#1 DEFUELING COMPLEX DESIGN\DRAWINGS\M140\SHEETS\S-401.DWG

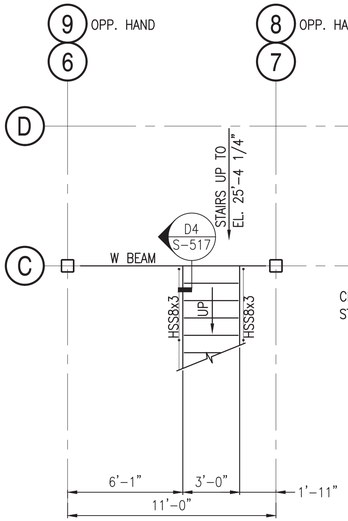

EAST - WEST INTERIOR STAIR PLAN AT EL. 15'-4 1/4" (D1)

SCALE: 1/4"=1'-0"

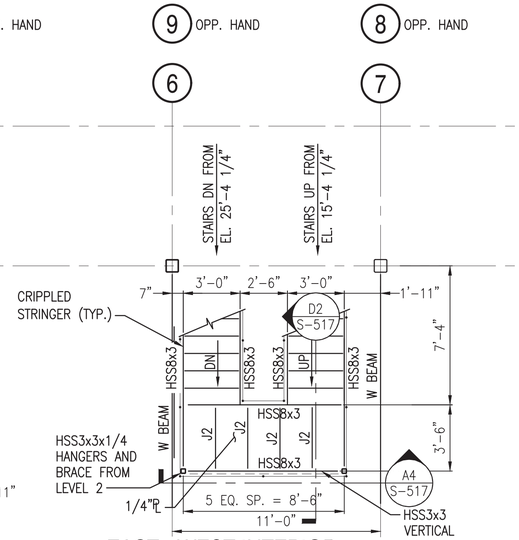

EAST - WEST INTERIOR STAIR PLAN AT EL. 20'-5 1/4" (D2)

SCALE: 1/4"=1'-0"

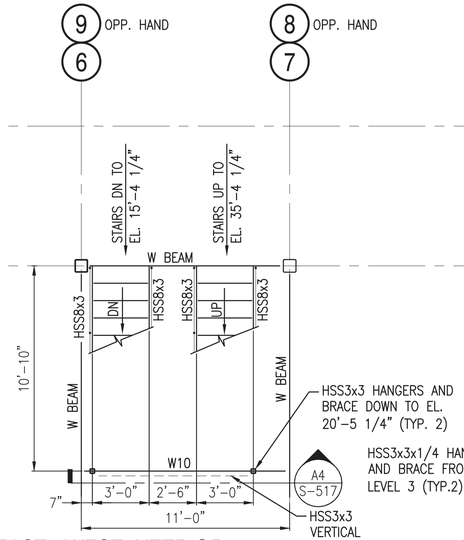

EAST - WEST INTERIOR STAIR PLAN AT EL. 25'-4 1/4" (D3)

SCALE: 1/4"=1'-0"

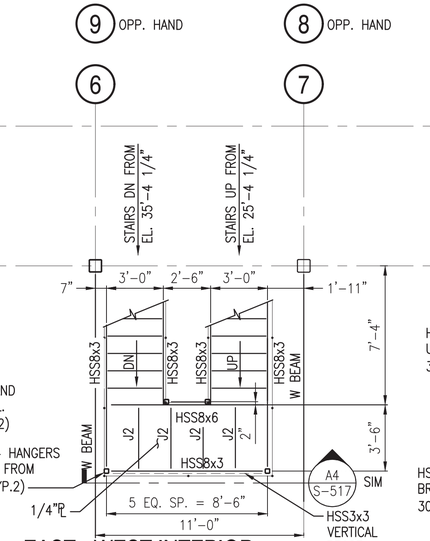

EAST - WEST INTERIOR STAIR PLAN AT EL. 30'-5 1/4" (D4)

SCALE: 1/4"=1'-0"

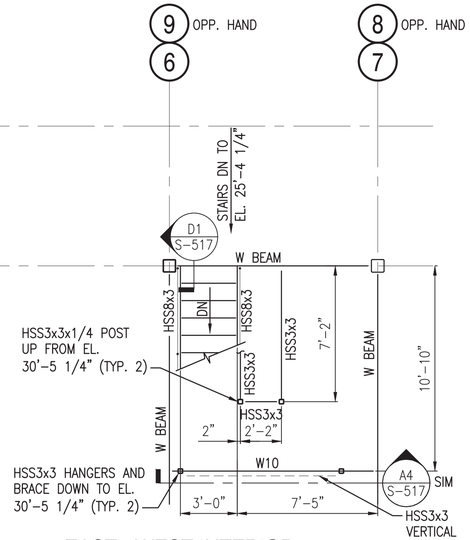

EAST - WEST INTERIOR STAIR PLAN AT EL. 35'-4 1/4" (D5)

SCALE: 1/4"=1'-0"

NOTES

1. SEE SHEET S-001 FOR GENERAL NOTES.
2. ALL EXTERIOR STEEL SHALL BE GALVANIZED.

LEGEND

C10	=	C10x15.3
C8	=	C8x11.5
HSS8x3	=	HSS8x3x3x1/4
HSS3X3	=	HSS3x3x3x1/4
HSS8x6	=	HSS8x6x3/8

G1 — GALVANIZED 19-W-4 1 1/4"x1/8" GRATING TYPICAL

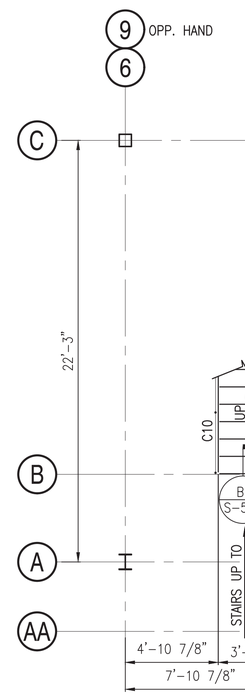

EAST -WEST EXTERIOR CRANE ACCESS STAIR PLAN AT EL. 47'-10 1/4" (A1)

SCALE: 1/4"=1'-0"

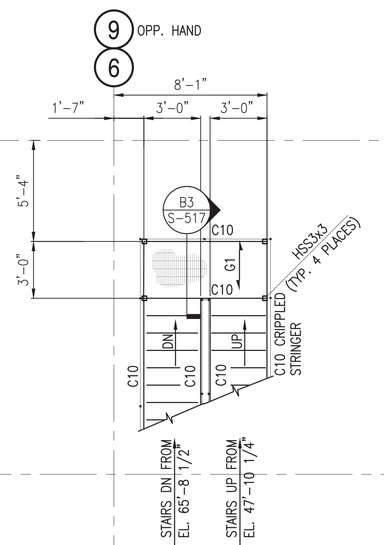

EAST - WEST EXTERIOR CRANE ACCESS STAIR PLAN AT EL. 54'-2 1/4" (A2)

SCALE: 1/4"=1'-0"

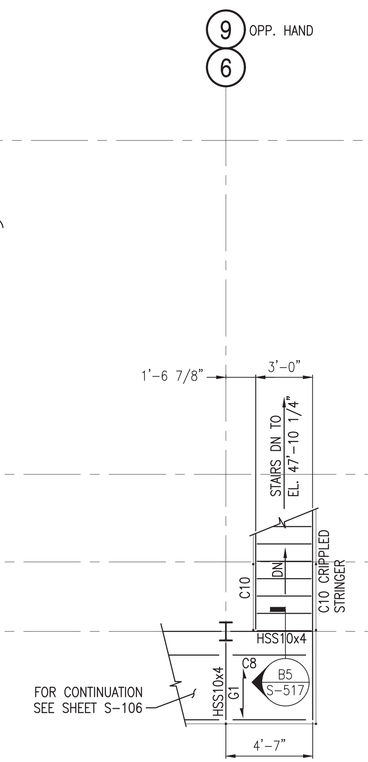

EAST - WEST EXTERIOR CRANE ACCESS STAIR PLAN AT EL. 65'-8 1/2" (A3)

SCALE: 1/4"=1'-0"

0 2' 4' 8'
Scale: 1/4" = 1'-0"

SYM	DESCRIPTION	DATE	APPR
0	ISSUED FOR CONSTRUCTION	10/28/2016	CBC

NAVFAC

STATE OF MAINE — SAMUEL J. THOMAS No. 12866 — LICENSED PROFESSIONAL ENGINEER — 10/28/16 — SEAL

Colby Company engineering — A/E INFO

APPROVED: David W. Thurnfeld — FOR COMMANDER NAVFAC

ACTIVITY: TIM FISHER, C. 2370.6 BRANCH HEAD — SATISFACTORY TO — DATE 10/28/2016

DES SJT | DRW ERB | CHK CBC

PMDM: PETER STOCKLESS

BRANCH MANAGER: IAN BODWELL

FEAD/PM&E: AMIN BAHROUR

FIRE PROTECTION: PATRICK BAKAJ

DEPARTMENT OF THE NAVY — NAVAL FACILITIES ENGINEERING COMMAND — NAVAL FACILITIES ENGINEERING COMMAND ~ MID-ATLANTIC — PUBLIC WORKS DEPARTMENT - MAINE — NAVAL SHIPYARD - PORTSMOUTH, NH

PORTSMOUTH NAVAL SHIPYARD — KITTERY, ME

DRY DOCK #1 DEFUELING COMPLEX
M-140 COMPLEX

RAILCAR ENCLOSURE AND CRANE ACCESS STAIR PART PLANS

EPROJECT NO.: 1363311

CONSTR. CONTR. NO.: N40085-17-C-5002

NAVFAC DRAWING NO.: 12734834

SHEET 51 OF 188

S-402 | DD1-16-915

DRAWFORM REVISION: 10 OCTOBER 2014

10/28/2016 6:36:48 AM X:\297 PORTSMOUTH NAVAL SHIPYARD\297.005.001 - DD#1 DEFUELING COMPLEX DESIGN\DRAWINGS\M140\SHEETS\S-402.DWG

NOTES

1. SEE SHEET S-001 FOR GENERAL NOTES.
2.

LEGEND

C10 = C10x15.3
C8 = C8x11.5
C7 = C7x9.8

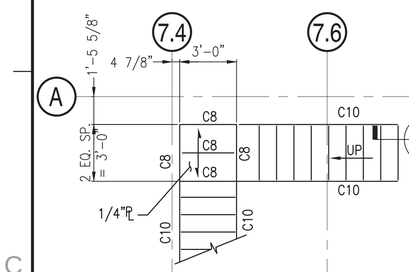

SOUTH STAIR TOWER
PLAN AT EL. 0'-0"
SCALE: 1/4"=1'-0"
D1

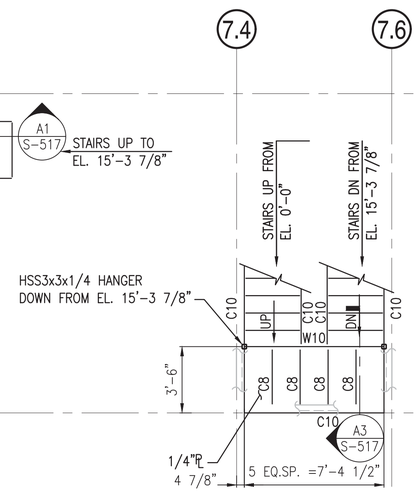

SOUTH STAIR TOWER
PLAN AT EL. 10'-9 7/16"
SCALE: 1/4"=1'-0"
D2

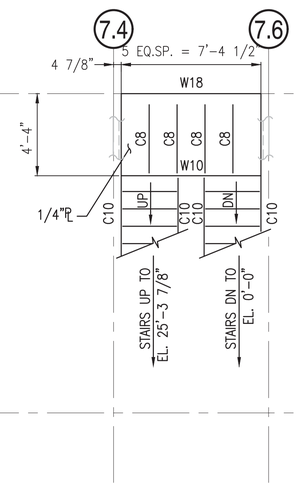

SOUTH STAIR TOWER
PLAN AT EL. 15'-3 7/8"
SCALE: 1/4"=1'-0"
D3

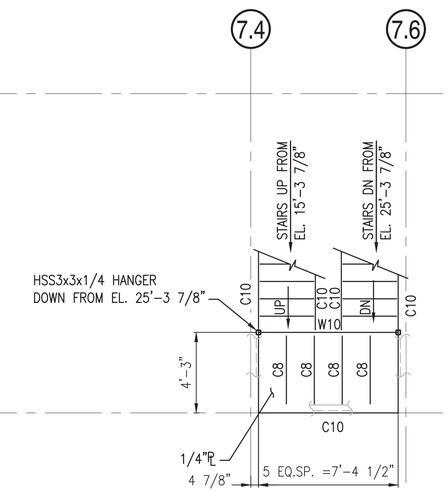

SOUTH STAIR TOWER
PLAN AT EL. 20'-3 7/8"
SCALE: 1/4"=1'-0"
D4

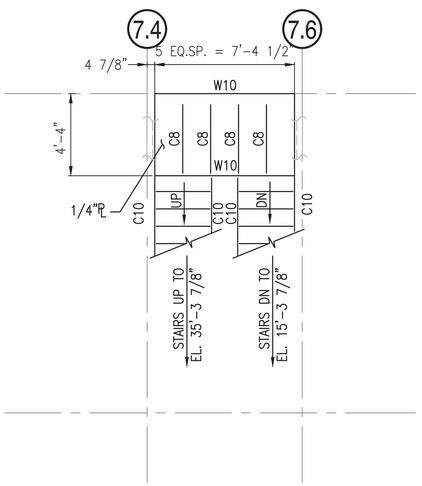

SOUTH STAIR TOWER
PLAN AT EL. 25'-3 7/8"
SCALE: 1/4"=1'-0"
D5

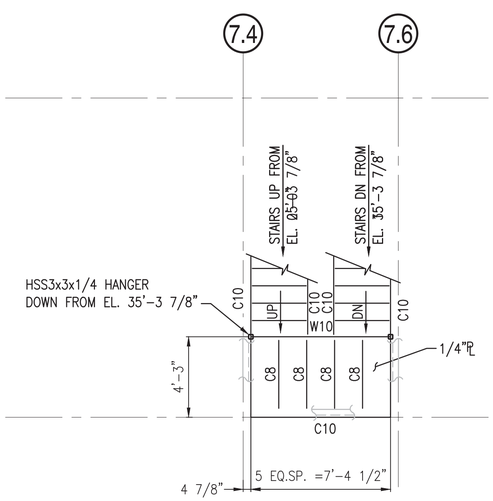

SOUTH STAIR TOWER
PLAN AT EL. 30'-3 7/8"
SCALE: 1/4"=1'-0"
B2

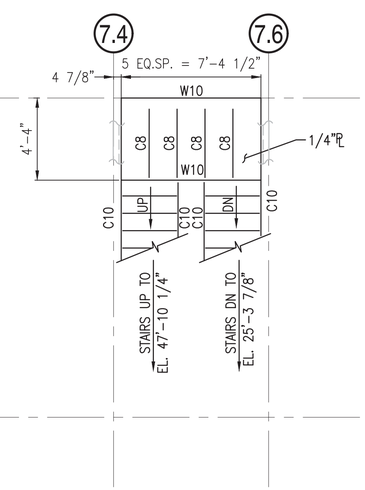

SOUTH STAIR TOWER
PLAN AT EL. 35'-3 7/8"
SCALE: 1/4"=1'-0"
B3

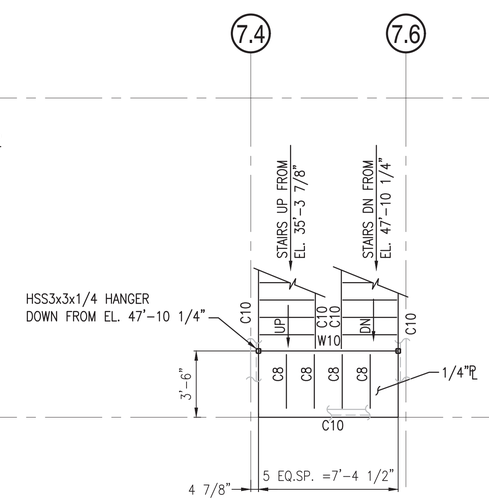

SOUTH STAIR TOWER
PLAN AT EL. 41'-0 7/16"
SCALE: 1/4"=1'-0"
B4

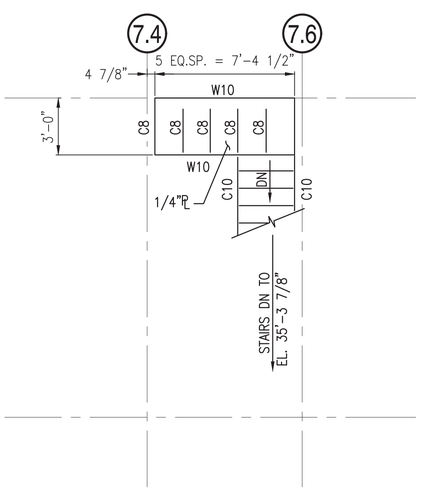

SOUTH STAIR TOWER
PLAN AT EL. 47'-10 1/4"
SCALE: 1/4"=1'-0"
B5

Scale: 1/4" = 1'-0"

SYM	DESCRIPTION	DATE	APPR
0	ISSUED FOR CONSTRUCTION	10/28/2016	CBC

NAVFAC

STATE OF MAINE
SAMUEL J. THOMAS
No. 13855
LICENSED PROFESSIONAL ENGINEER
10/28/16
SEAL

Colby Company engineering
A/E INFO

APPROVED
David W. Thurnfield
FOR COMMANDER NAVFAC

ACTIVITY
TIM FISHER
C. 2370.6 BRANCH HEAD

SATISFACTORY TO: DATE 10/28/2016
DES SJT DRW ERB CHK CBC
PMDM PETER STOCKLESS
BRANCH MANAGER IAN BODWELL
FEAD/PMAE AMIN BAHROUR
FIRE PROTECTION PATRICK BAKAJ

DEPARTMENT OF THE NAVY
NAVAL FACILITIES ENGINEERING COMMAND
PUBLIC WORKS DEPARTMENT - MAINE
NAVAL FACILITIES ENGINEERING COMMAND ~ MID-ATLANTIC
NAVAL SHIPYARD - PORTSMOUTH, NH
KITTERY, ME
PORTSMOUTH NAVAL SHIPYARD
DRY DOCK #1 DEFUELING COMPLEX
M-140 COMPLEX
ENTRYWAY STAIR TOWER PART PLANS

EPROJECT NO.: 1363311
CONSTR. CONTR. NO. N40085-17-C-5002
NAVFAC DRAWING NO. 12734835
SHEET 52 OF 188
S-403 DD1-16-916

DRAWFORM REVISION: 10 OCTOBER 2014

10/28/2016 6:36:53 AM X:\297 PORTSMOUTH NAVAL SHIPYARD\297.005.001 - DD#1 DEFUELING COMPLEX DESIGN\DRAWINGS\M140\SHEETS\S-403.DWG

NOTES

1. SEE SHEET S-001 FOR GENERAL NOTES.

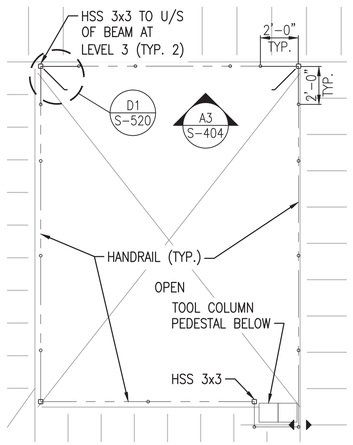

PARTIAL PLAN TOOL RACK AND HANDRAIL LEVEL 2 (D1)
SCALE: 1/4"=1'-0"

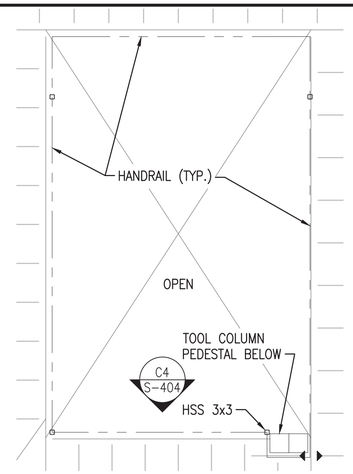

PARTIAL PLAN TOOL RACK AND HANDRAIL LEVEL 3 (D2)
SCALE: 1/4"=1'-0"

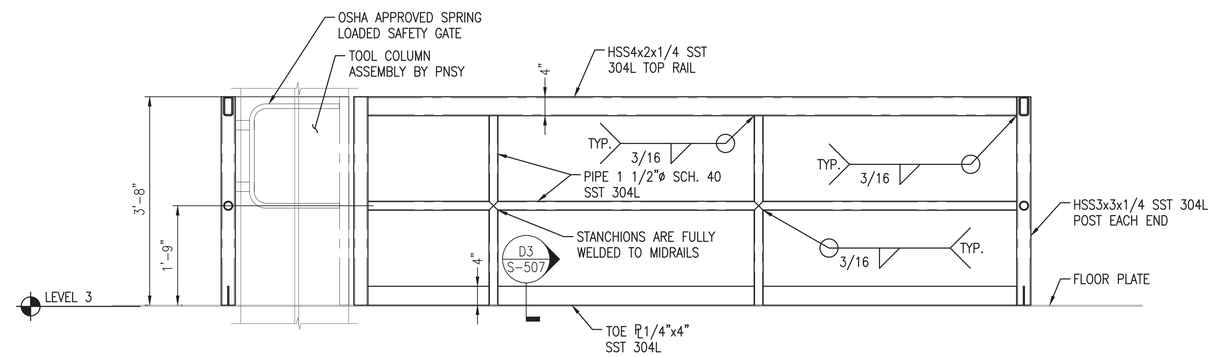

TOOL RACK AND HANDRAIL ELEVATION (C4)
SCALE: 3/4"=1'-0" S-103, S-404

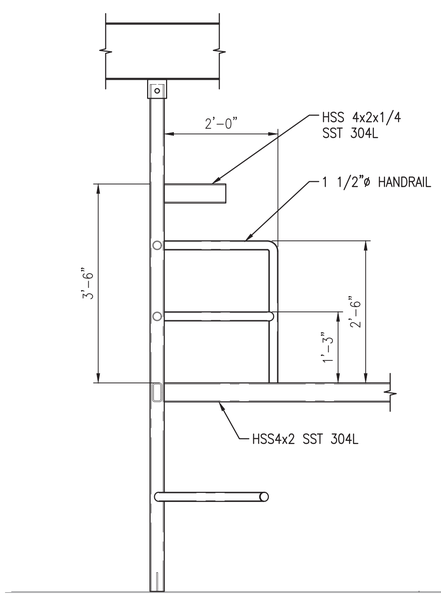

ELEVATION AT TENSIONER (A1)
SCALE: 3/4"=1'-0" S-404

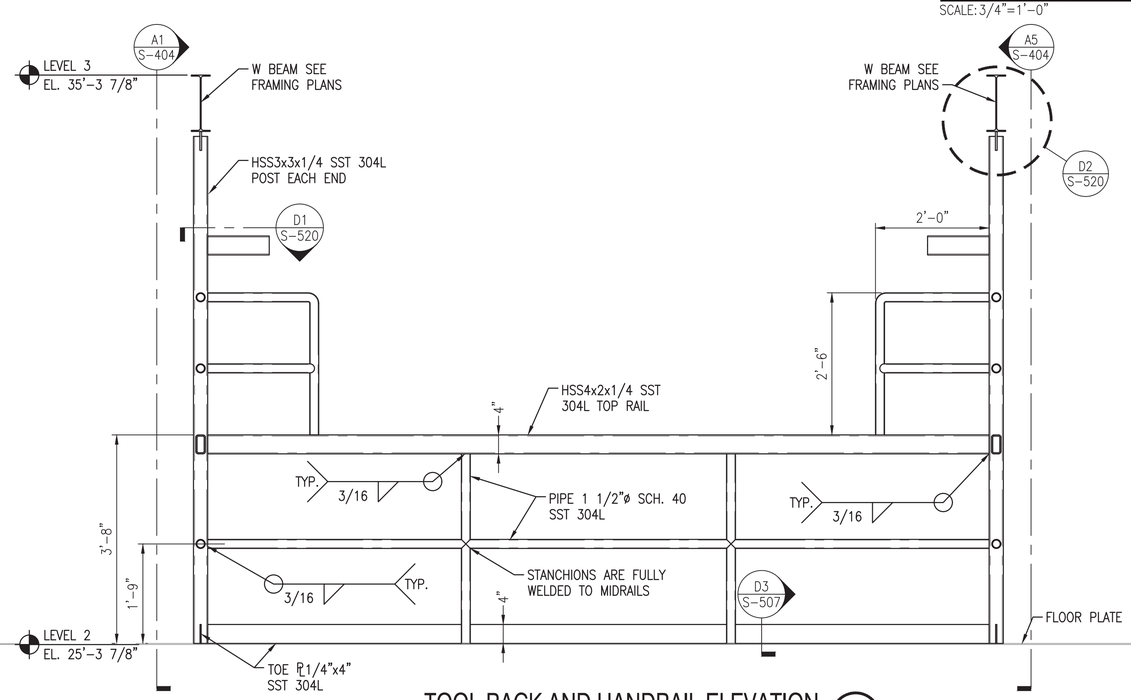

TOOL RACK AND HANDRAIL ELEVATION (A3)
SCALE: 3/4"=1'-0" S-102, S-102A, S-404

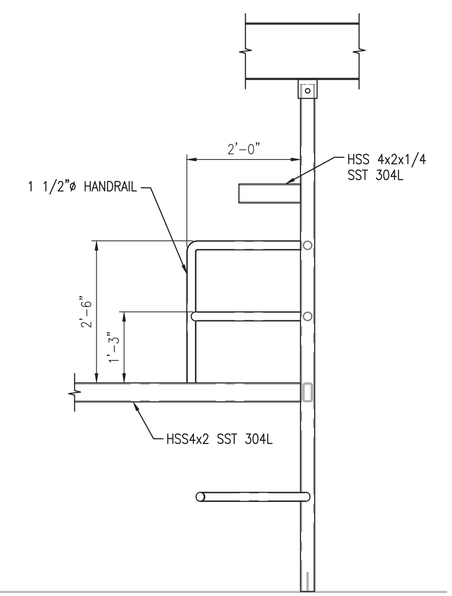

ELEVATION AT TENSIONER (A5)
SCALE: 3/4"=1'-0" S-404

Scale: 3/4" = 1'-0" (0, 1', 2', 3')
Scale: 1/4" = 1'-0" (0, 2', 4', 8')

SYM	DESCRIPTION	DATE	APPR
0	ISSUED FOR CONSTRUCTION	10/28/2016	CBC

NAVFAC

STATE OF MAINE — SAMUEL J. THOMAS No. 12734836 — LICENSED PROFESSIONAL ENGINEER — 10/28/16 — SEAL

Colby Company engineering — A/E INFO

APPROVED: David W. Thurnfield
FOR COMMANDER NAVFAC
ACTIVITY: TIM FISHER, C. 2370.6 BRANCH HEAD
SATISFACTORY TO — DATE: 10/28/2016
DES: SJT | DRW: ERB | CHK: CBC
PMDM: PETER STOCKLESS
BRANCH MANAGER: IAN BODWELL
FEA/PM&E: AMIN BAHROUR
FIRE PROTECTION: PATRICK BAKAJ

DEPARTMENT OF THE NAVY
NAVAL FACILITIES ENGINEERING COMMAND ~ MID-ATLANTIC
PUBLIC WORKS DEPARTMENT - MAINE
NAVAL FACILITIES ENGINEERING COMMAND
NAVAL SHIPYARD - PORTSMOUTH, NH
PORTSMOUTH NAVAL SHIPYARD
KITTERY, ME
DRY DOCK #1 DEFUELING COMPLEX
M-140 COMPLEX
PARTIAL ELEVATIONS AT TOOL RACK AND HANDRAILS

EPROJECT NO.: 1363311
CONSTR. CONTR. NO.: N40085-17-C-5002
NAVFAC DRAWING NO.: 12734836
SHEET 53 OF 188
S-404 | DD1-16-917
DRAWFORM REVISION: 10 OCTOBER 2014

10/28/2016 6:37:00 AM X:\297 PORTSMOUTH NAVAL SHIPYARD\297.005.001 - DD#1 DEFUELING COMPLEX DESIGN\DRAWINGS\M140\SHEETS\S-404.DWG

NOTES

1. SEE SHEET S-001 FOR GENERAL NOTES.
2. FRAMES FOR MECHANICAL PENETRATIONS. SEE DETAILS D1, D2 ON S-512
3. ENGINEERED VENT OPENING R.O. = 4'-2 1/2"W x 2'-3 1/2"H - SEE D3, D5 ON S-512
4. DUCT SUPPORTS - SEE DETAIL ON S-521

FRAMING LEGEND

B1	DENOTES W10x12
VB1	DENOTES HSS6X6X1/2
Z6	DENOTES 6x2 1/2 Z-GIRT
Z12	DENOTES 12x3 1/2 Z-GIRT

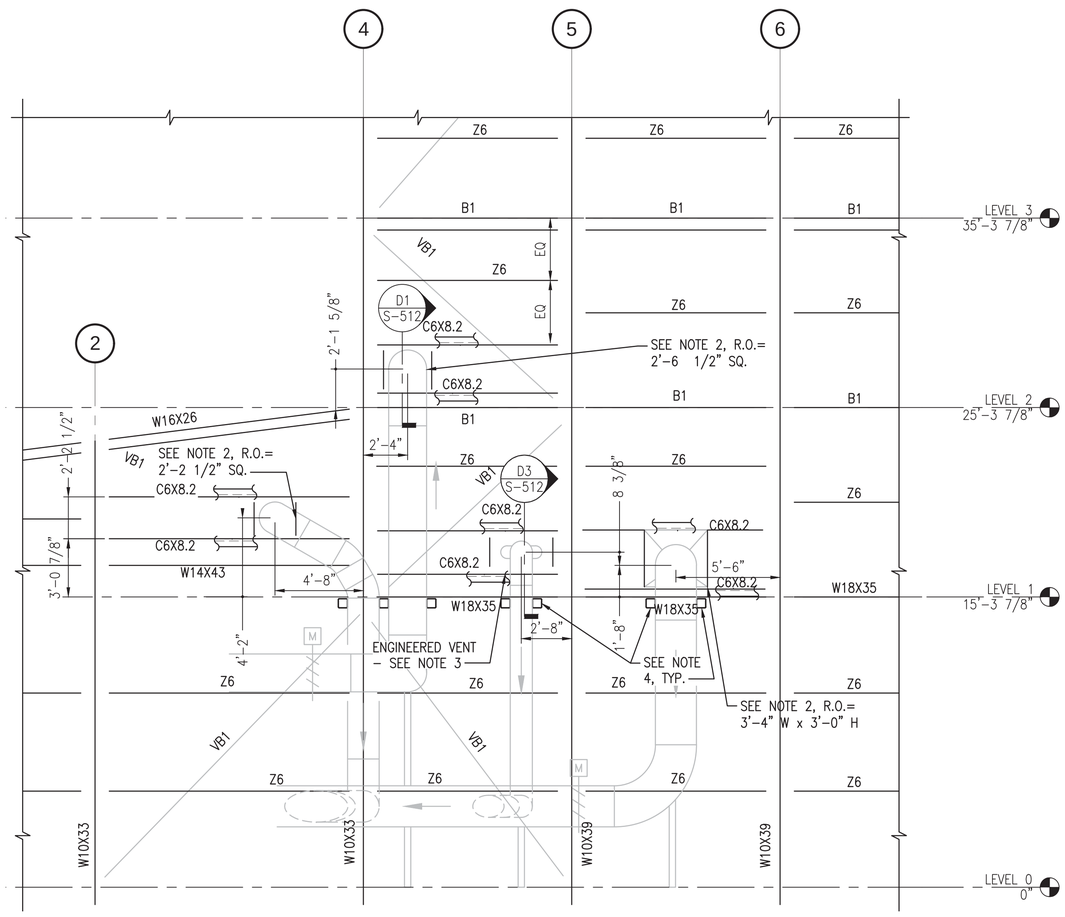

ENLARGED PARTIAL FRAMING ELEVATION LINE A

SCALE: 1/4" = 1'-0"

S-101, S-101A, S-201 (A1)

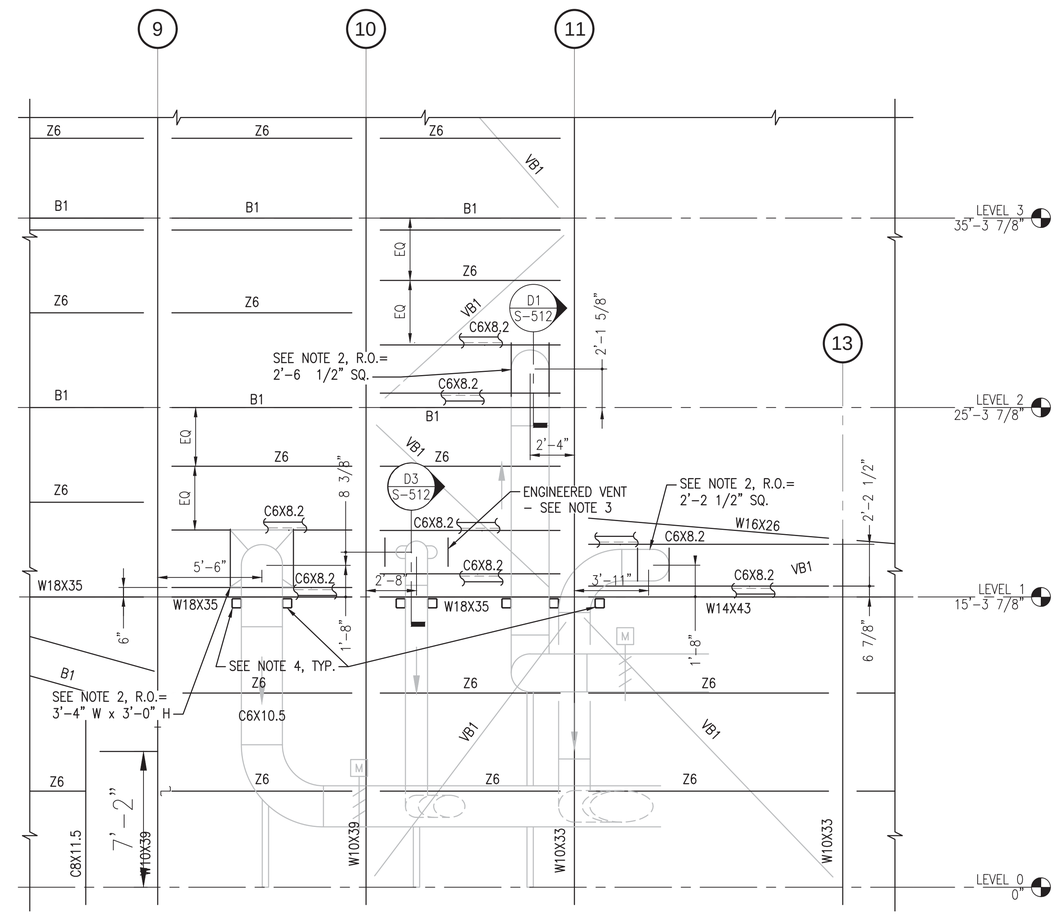

ENLARGED PARTIAL FRAMING ELEVATION LINE A

SCALE: 1/4" = 1'-0"

S-101, S-101A, S-201 (A3)

0 2' 4' 8'
Scale: 1/4" = 1'-0"

SYM	DESCRIPTION	DATE	APPR
0	ISSUED FOR CONSTRUCTION	10/28/2016	CBC

NAVFAC

STATE OF MAINE
SAMUEL J. THOMAS
No. 12837
LICENSED PROFESSIONAL ENGINEER
10/28/16
SEAL

Colby Company engineering
A/E INFO

APPROVED
David W. Thurnfield
FOR COMMANDER NAVFAC

ACTIVITY
TIM FISHER
C. 2370.6 BRANCH HEAD

SATISFACTORY TO DATE 10/28/2016
DES SJT DRW ERB CHK CBC
PMDM PETER STOCKLESS
BRANCH MANAGER IAN BODWELL
FEADPM&E AMIN BAHROUR
FIRE PROTECTION PATRICK BAKAJ

DEPARTMENT OF THE NAVY
NAVAL FACILITIES ENGINEERING COMMAND
PUBLIC WORKS DEPARTMENT - MAINE

NAVAL FACILITIES ENGINEERING COMMAND ~ MID-ATLANTIC
NAVAL SHIPYARD - PORTSMOUTH, NH

PORTSMOUTH NAVAL SHIPYARD
KITTERY, ME
DRY DOCK #1 DEFUELING COMPLEX
M-140 COMPLEX

ENLARGED FRAMING ELEVATIONS

EPROJECT NO.: 1363311
CONSTR. CONTR. NO. N40085-17-C-5002
NAVFAC DRAWING NO. 12734837
SHEET 54 OF 188
S-405 DD1-16-918

DRAWFORM REVISION: 10 OCTOBER 2014

10/28/2016 6:37:04 AM X:\297 PORTSMOUTH NAVAL SHIPYARD\297.005.001 - DD#1 DEFUELING COMPLEX DESIGN\DRAWINGS\M140\SHEETS\S-405.DWG

NOTES

1. SEE SHEET S-001 FOR GENERAL NOTES.
2. LIGHT GAGE FRAMING TO BE HUNG UNDER PERPENDICULAR FRAMING. FRAME LIGHT GAGE RUNNING PARALLEL WITH W BEAMS/FLOOR FRAMING INTO LIGHT GAGE RUNNING PERPENDICULAR. SPACE LIGHT GAGE FRAMING AT 4'-0" ON CENTER, 6" FROM WALLS AND OPENINGS.
3. CEILING HEIGHT SHOWN ARE FOR INFORMATION ONLY, SEE ARCHITECTURAL DRAWINGS.

LEGEND

CEILING HEIGHT 9'-0"

CEILING HEIGHT 8'-9"

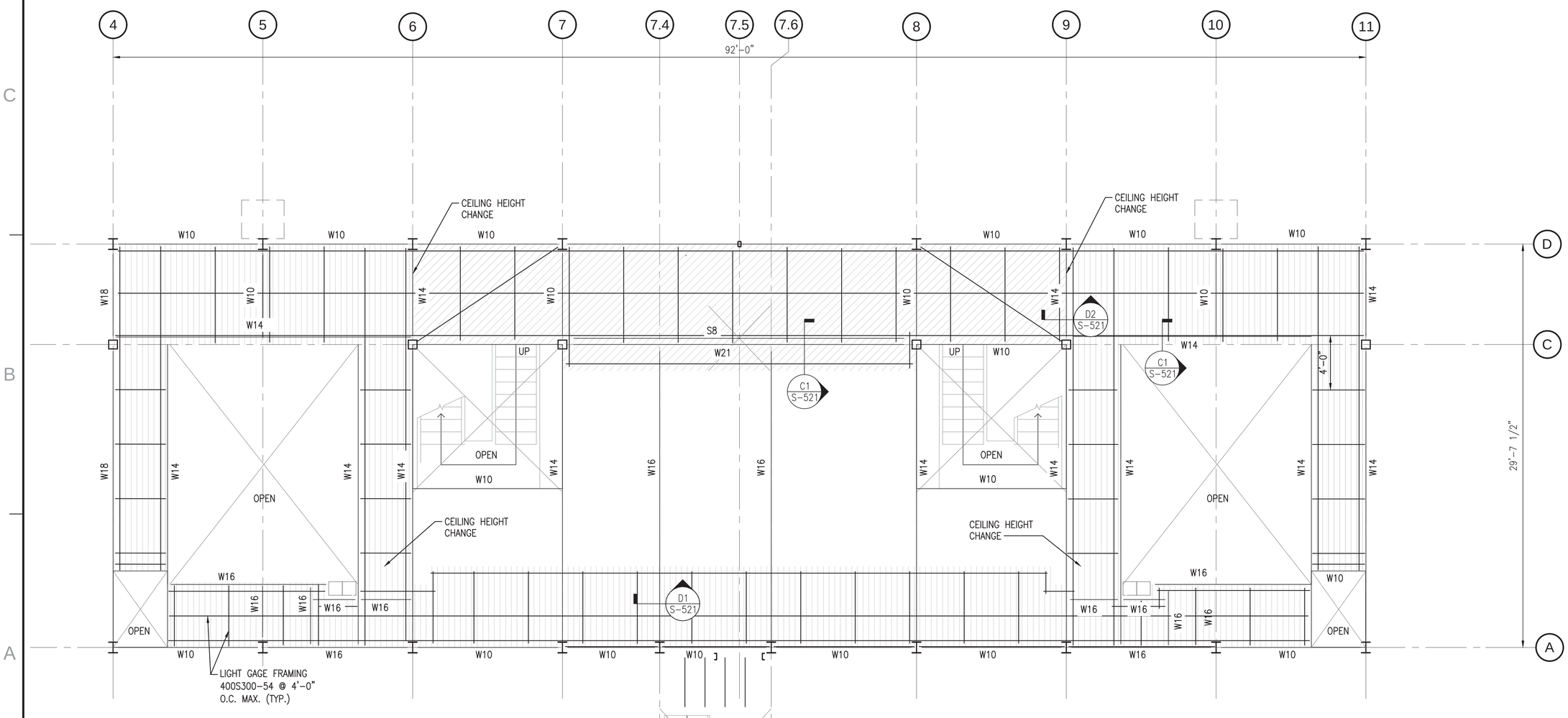

FRAMING PLAN LEVEL 1 (NO STORAGE ENCLOSURE) CEILING

SCALE: 1/4" = 1'-0"

T.O.S. EL. 25'-3 7/8" U.N.O. (UNDERSIDE LEVEL 2)

PLAN NORTH

Scale: 1/4" = 1'-0"

SYM	DESCRIPTION	DATE	APPR
0	ISSUED FOR CONSTRUCTION	10/28/2016	CBC

NAVFAC

STATE OF MAINE
SAMUEL J. THOMAS
No. 14455
LICENSED PROFESSIONAL ENGINEER
10/28/16
SEAL

Colby Company engineering
A/E INFO

APPROVED
David W. Drumfield
FOR COMMANDER NAVFAC

ACTIVITY
TIM FISHER
C. 2370.6 BRANCH HEAD

SATISFACTORY TO DATE 10/28/2016

DES	SJT	DRW ERB	CHK CBC

PM/DM	PETER STOCKLESS
BRANCH MANAGER	IAN BODWELL
FEAD/PM&E	AMIN BAHROUR
FIRE PROTECTION	PATRICK BAKAJ

DEPARTMENT OF THE NAVY
NAVAL FACILITIES ENGINEERING COMMAND
PUBLIC WORKS DEPARTMENT - MAINE

NAVAL FACILITIES ENGINEERING COMMAND – MID-ATLANTIC
NAVAL SHIPYARD - PORTSMOUTH NH

PORTSMOUTH NAVAL SHIPYARD
KITTERY, ME

DRY DOCK #1 DEFUELING COMPLEX
M-140 COMPLEX

FRAMING PLAN LEVEL 1 (NO STORAGE ENCLOSURE)

EPROJECT NO.: 1363311

CONSTR. CONTR. NO.
N40085-17-C-5002

NAVFAC DRAWING NO.
12734838

SHEET 55 OF 188

S-406 | DD1-16-919

DRAWFORM REVISION: 10 OCTOBER 2014

10/28/2016 6:37:08 AM X:\297 PORTSMOUTH NAVAL SHIPYARD\297.005.001 - DD#1 DEFUELING COMPLEX DESIGN\DRAWINGS\M140\SHEETS\S-406.DWG

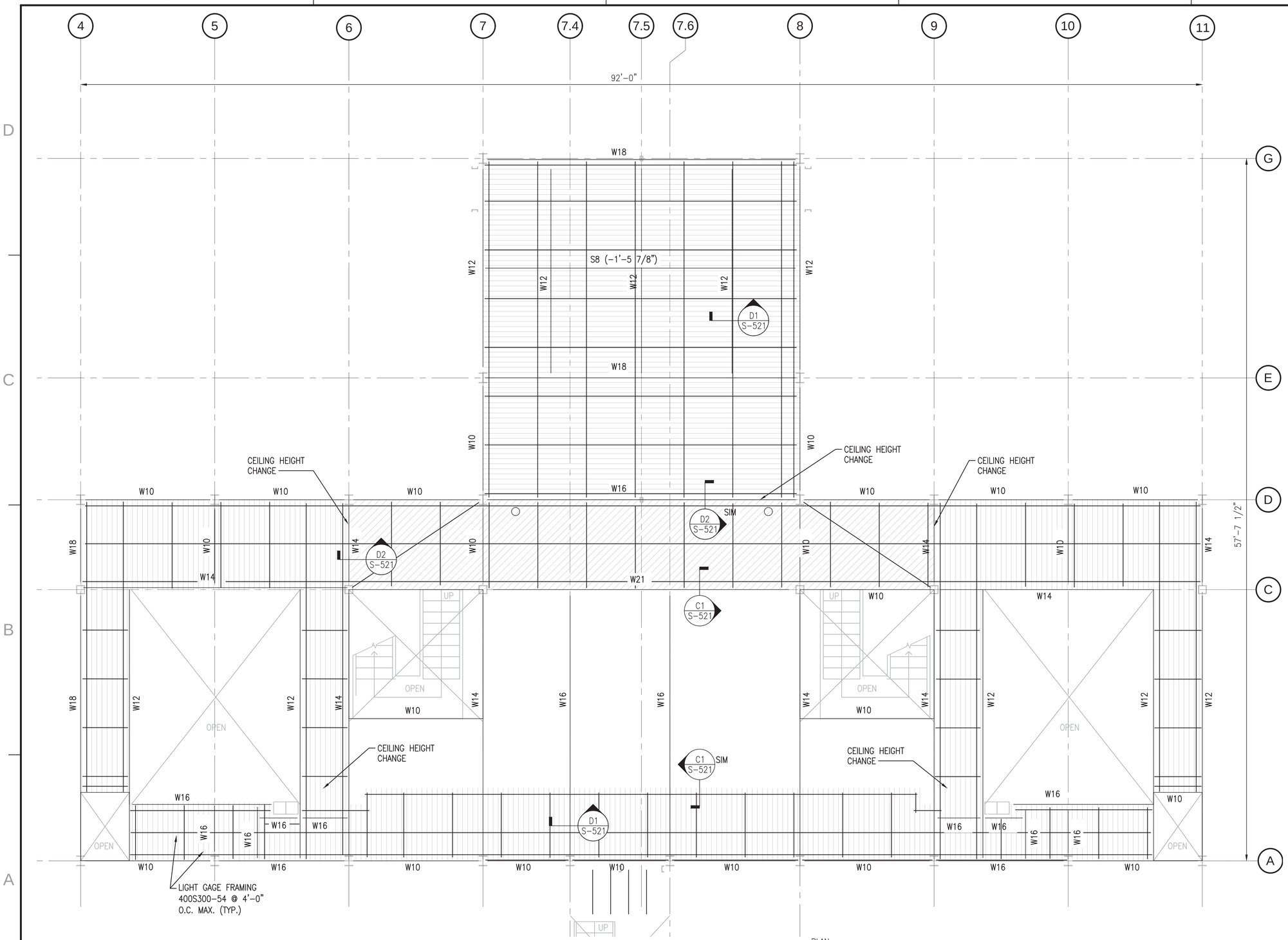

FRAMING PLAN LEVEL 1 CEILING

SCALE: 1/4" = 1'-0"

T.O.S. EL. 25'-3 7/8" U.N.O. (UNDERSIDE LEVEL 2)

PLAN NORTH

0 2' 4' 8'
Scale: 1/4" = 1'-0"

NOTES

1. SEE SHEET S-001 FOR GENERAL NOTES AND ABBREVIATIONS.
2. LIGHT GAGE FRAMING TO BE HUNG UNDER PERPENDICULAR FRAMING. FRAME LIGHT GAGE RUNNING PARALLEL WITH W BEAMS/FLOOR FRAMING INTO LIGHT GAGE RUNNING PERPENDICULAR. SPACE LIGHT GAGE FRAMING AT 4'-0" ON CENTER, 6" FROM WALLS AND OPENINGS.
3. CEILING HEIGHT SHOWN ARE FOR INFORMATION ONLY, SEE ARCHITECTURAL DRAWINGS.

LEGEND

- CEILING HEIGHT 9'-0"
- CEILING HEIGHT 8'-9"
- CEILING HEIGHT 8'-5"

SYM	DESCRIPTION	DATE	APPR
0	ISSUED FOR CONSTRUCTION	10/28/2016	CBC

NAVFAC

STATE OF MAINE
SAMUEL J. THOMAS
No. 13855
LICENSED PROFESSIONAL ENGINEER
10/28/16
SEAL

Colby Company engineering
A/E INFO

APPROVED FOR COMMANDER: David W. Thumfuld
FOR COMMANDER NAVFAC
ACTIVITY: TIM FISHER, C. 2370.6 BRANCH HEAD
SATISFACTORY TO DATE 10/28/2016
DES SJT | DRW ERB | CHK CBC
PM/DM: PETER STOCKLESS
BRANCH MANAGER: IAN BODWELL
FEA/DPM&E: AMIN BAHROUR
FIRE PROTECTION: PATRICK BAKAJ

DEPARTMENT OF THE NAVY
NAVAL FACILITIES ENGINEERING COMMAND
PUBLIC WORKS DEPARTMENT - MAINE
NAVAL FACILITIES ENGINEERING COMMAND – MID-ATLANTIC
NAVAL SHIPYARD - PORTSMOUTH, NH
PORTSMOUTH NAVAL SHIPYARD
KITTERY, ME
DRY DOCK #1 DEFUELING COMPLEX
M-140 COMPLEX
FRAMING PLAN LEVEL 1 CEILING

EPROJECT NO.: 1363311
CONSTR. CONTR. NO.: N40085-17-C-5002
NAVFAC DRAWING NO.: 12734839
SHEET 56 OF 188
S-407 | DD1-16-920

DRAWFORM REVISION: 10 OCTOBER 2014

10/28/2016 6:37:13 AM X:\297 PORTSMOUTH NAVAL SHIPYARD\297.005.001 - DD#1 DEFUELING COMPLEX DESIGN\DRAWINGS\M140\SHEETS\S-407.DWG

NOTES

1. SEE SHEET S-001 FOR GENERAL NOTES.
2. LIGHT GAGE FRAMING TO BE HUNG UNDER PERPENDICULAR FRAMING. FRAME LIGHT GAGE RUNNING PARALLEL WITH W BEAMS/FLOOR FRAMING INTO LIGHT GAGE RUNNING PERPENDICULAR. SPACE LIGHT GAGE FRAMING AT 4'-0" ON CENTER, 6" FROM WALLS AND OPENINGS.
3. CEILING HEIGHT SHOWN ARE FOR INFORMATION ONLY, SEE ARCHITECTURAL DRAWINGS.

LEGEND

CEILING HEIGHT 9'-0"

CEILING HEIGHT 8'-9"

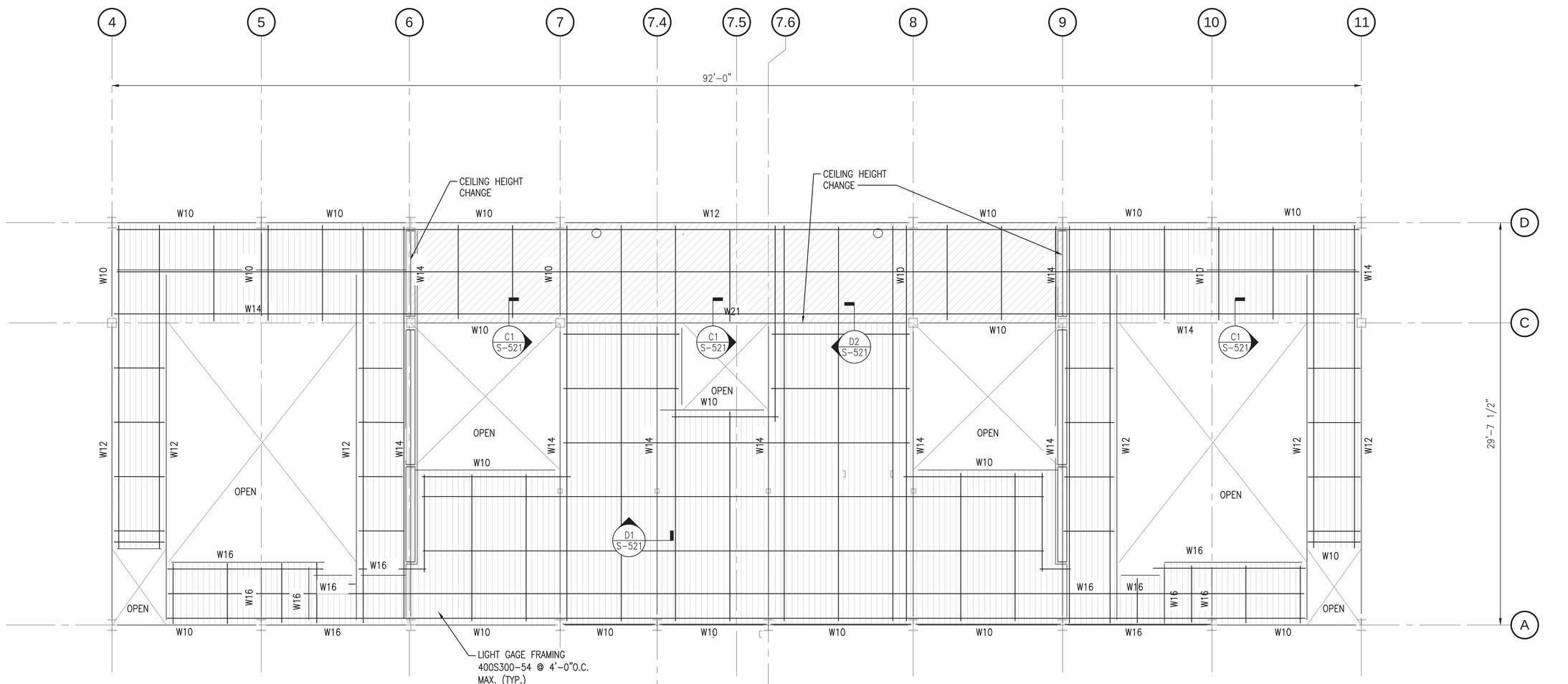

FRAMING PLAN LEVEL 2 - CEILING

SCALE: 1/4" = 1'-0"

T.O.S. EL. 35'-3 7/8" U.N.O. (UNDERSIDE LEVEL 3)

0 2' 4' 8'
Scale: 1/4" = 1'-0"

SYM	DESCRIPTION	DATE	APPR
0	ISSUED FOR CONSTRUCTION	10/28/2016	CBC

NAVFAC

STATE OF MAINE
SAMUEL J. THOMAS
No. 7000
LICENSED PROFESSIONAL ENGINEER
10/28/16
SEAL

Colby Company engineering
A/E INFO

APPROVED
David W. Thurnfield
FOR COMMANDER NAVFAC

ACTIVITY
TIM FISHER
C. 2370.6 BRANCH HEAD

SATISFACTORY TO DATE 10/28/2016

DES SJT DRW ERB CHK CBC

PM/CM PETER STOCKLESS

BRANCH MANAGER IAN BODWELL

FEAD/PM/E AMIN BAHROUR

FIRE PROTECTION PATRICK BAKAJ

DEPARTMENT OF THE NAVY
NAVAL FACILITIES ENGINEERING COMMAND
PUBLIC WORKS DEPARTMENT - MAINE

NAVAL FACILITIES ENGINEERING COMMAND ~ MID-ATLANTIC
NAVAL SHIPYARD - PORTSMOUTH, NH

PORTSMOUTH NAVAL SHIPYARD
KITTERY, ME

DRY DOCK #1 DEFUELING COMPLEX
M-140 COMPLEX

FRAMING PLAN LEVEL 2 - CEILING

EPROJECT NO.: 1363311

CONSTR. CONTR. NO.
N40085-17-C-5002

NAVFAC DRAWING NO.
12734840

SHEET 57 OF 188

S-408 | DD1-16-921

DRAWFORM REVISION: 10 OCTOBER 2014

10/28/2016 6:37:17 AM X:\297 PORTSMOUTH NAVAL SHIPYARD\297.005.001 - DD#1 DEFUELING COMPLEX DESIGN\DRAWINGS\M140\SHEETS\S-408.DWG

NOTES

1. SEE SHEET S-001 FOR GENERAL NOTES.
2. LIGHT GAGE FRAMING TO BE HUNG UNDER PERPENDICULAR FRAMING. FRAME LIGHT GAGE RUNNING PARALLEL WITH W BEAMS/FLOOR FRAMING INTO LIGHT GAGE RUNNING PERPENDICULAR. SPACE LIGHT GAGE FRAMING AT 4'-0" ON CENTER, 6" FROM WALLS AND OPENINGS.
3. CEILING HEIGHT SHOWN ARE FOR INFORMATION ONLY, SEE ARCHITECTURAL DRAWINGS.

LEGEND

CEILING HEIGHT 9'-0"

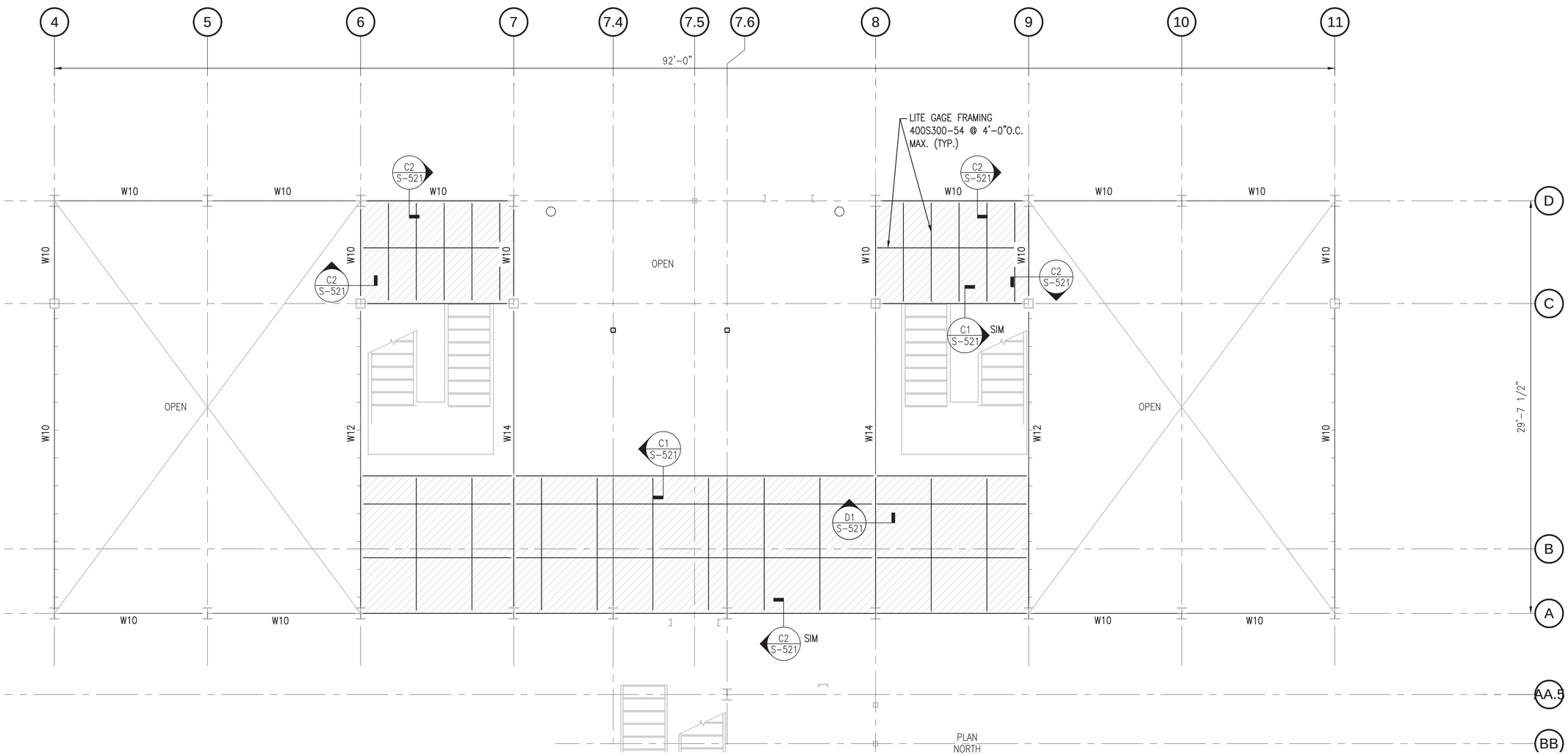

FRAMING PLAN LEVEL 3 - CEILING

SCALE: 1/4" = 1'-0"

T.O.S. EL. 47'-10 1/4" U.N.O. (UNDERSIDE OF LEVEL 4)

SYM	DESCRIPTION	DATE	APPR
0	ISSUED FOR CONSTRUCTION	10/28/2016	CBC

NAVFAC

STATE OF MAINE
SAMUEL J. THOMAS
No. 14266
LICENSED PROFESSIONAL ENGINEER
10/28/16
SEAL

Colby Company engineering
A/E INFO

APPROVED
BY DIRECTION OF:
David W. Thumfuld
FOR COMMANDER NAVFAC

ACTIVITY
TIM FISHER
C. 2370.6 BRANCH HEAD

SATISFACTORY TO DATE 10/28/2016

DES	SJT	DRW	ERB	CHK	CBC

PM/DM PETER STOCKLESS
BRANCH MANAGER IAN BODWELL
FEA/PM&E AMIN BAHROUR
FIRE PROTECTION PATRICK BAKAJ

DEPARTMENT OF THE NAVY
NAVAL FACILITIES ENGINEERING COMMAND
PUBLIC WORKS DEPARTMENT - MAINE

NAVAL FACILITIES ENGINEERING COMMAND ~ MID-ATLANTIC
NAVAL SHIPYARD - PORTSMOUTH, NH

PORTSMOUTH NAVAL SHIPYARD
KITTERY, ME
DRY DOCK #1 DEFUELING COMPLEX
M-140 COMPLEX

FRAMING PLAN LEVEL 3 – CEILING

EPROJECT NO.: 1363311
CONSTR. CONTR. NO. N40085-17-C-5002
NAVFAC DRAWING NO. 12734841
SHEET 58 OF 188

S-409 | DD1-16-922

DRAWFORM REVISION: 10 OCTOBER 2014

10/28/2016 6:37:22 AM X:\297 PORTSMOUTH NAVAL SHIPYARD\297.005.001 - DD#1 DEFUELING COMPLEX DESIGN\DRAWINGS\M140\SHEETS\S-409.DWG

NOTES

1. SEE SHEET S-001 FOR GENERAL NOTES.

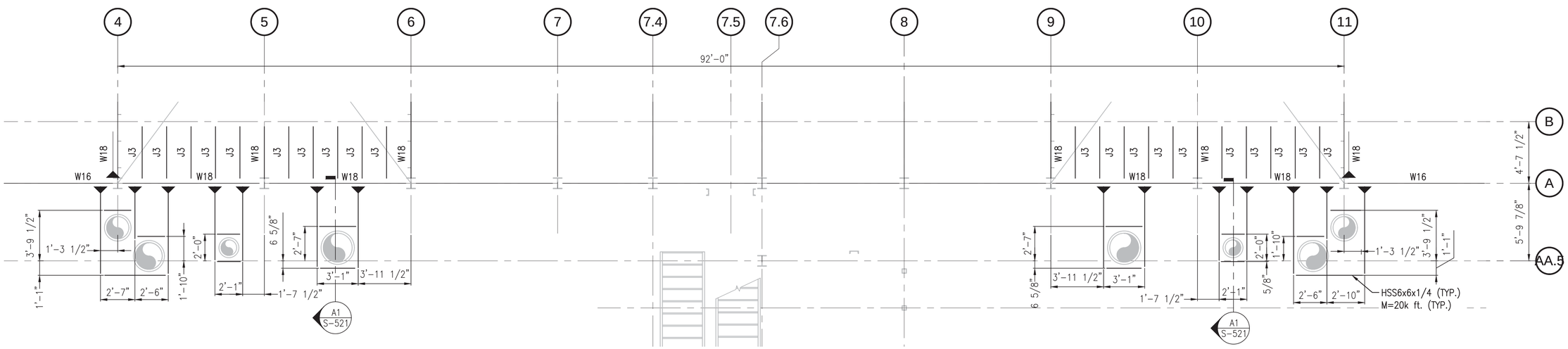

PART PLAN AT DUCT SUPPORTS

SCALE: 1/4" = 1'-0"

T.O.S. EL. 15'-3 7/8" U.N.O.

PLAN NORTH

Scale: 3/16" = 1'-0"

SYM	DESCRIPTION	DATE	APPR
0	ISSUED FOR CONSTRUCTION	10/28/2016	CBC

NAVFAC

STATE OF MAINE
SAMUEL J. THOMAS
No. 13888
LICENSED PROFESSIONAL ENGINEER
10/28/16

SEAL

Colby Company engineering

A/E INFO

APPROVED
David W. Thurnfield
FOR COMMANDER NAVFAC

ACTIVITY
TIM FISHER
C. 2370.6 BRANCH HEAD

SATISFACTORY TO DATE 10/28/2016

DES SJT | DRW ERB | CHK CBC

PMDM PETER STOCKLESS

BRANCH MANAGER IAN BODWELL

FEA/DPM&E AMIN BAHROUR

FIRE PROTECTION PATRICK BAKAJ

DEPARTMENT OF THE NAVY
NAVAL FACILITIES ENGINEERING COMMAND
PUBLIC WORKS DEPARTMENT - MAINE

NAVAL FACILITIES ENGINEERING COMMAND ~ MID-ATLANTIC
NAVAL SHIPYARD - PORTSMOUTH, NH

PORTSMOUTH NAVAL SHIPYARD
KITTERY, ME

DRY DOCK #1 DEFUELING COMPLEX
M-140 COMPLEX

PART PLAN AT DUCT SUPPORTS

EPROJECT NO.: 1363311

CONSTR. CONTR. NO.
N40085-17-C-5002

NAVFAC DRAWING NO.
12734842

SHEET 59 OF 188

S-410 | DD1-16-923

DRAWFORM REVISION: 10 OCTOBER 2014

10/28/2016 6:37:27 AM X:\297 PORTSMOUTH NAVAL SHIPYARD\297.005.001 - DD#1 DEFUELING COMPLEX DESIGN\DRAWINGS\M140\SHEETS\S-410.DWG

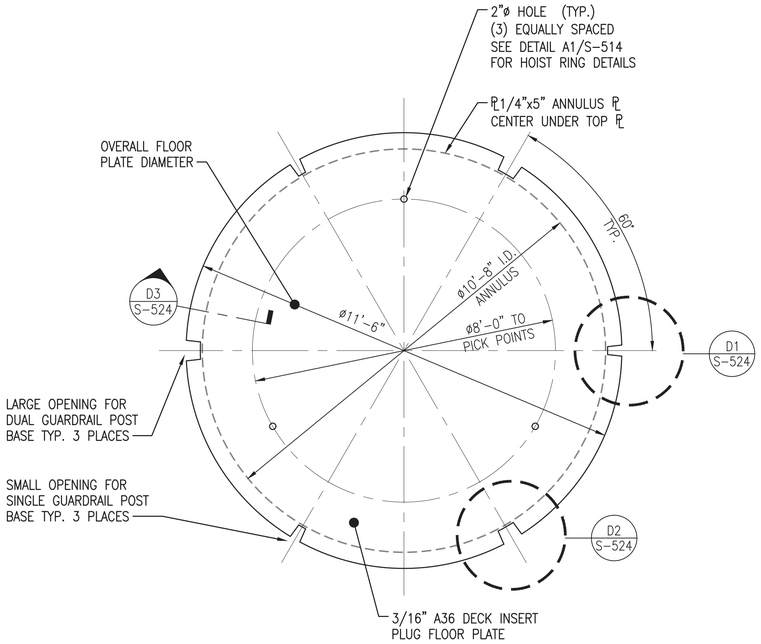

PART PLAN AT DECK INSERT PLUG

SCALE: 3/8"=1'-0" S-513 C1

(2 REQUIRED)

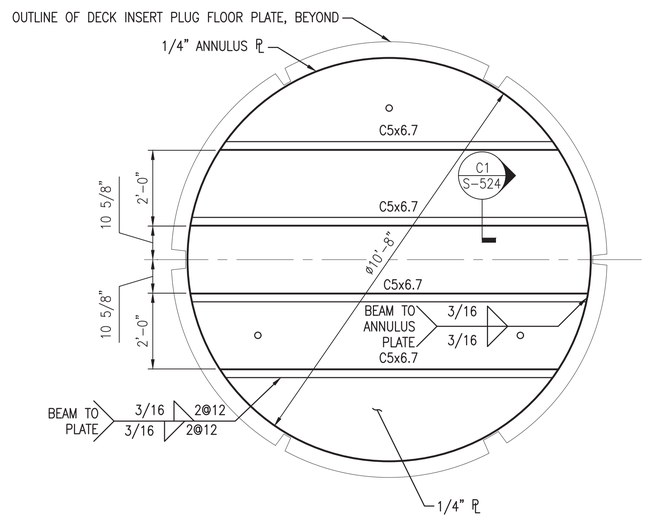

PART PLAN AT UNDERSIDE OF DECK INSERT PLUG

SCALE: 3/8"=1'-0" S-513 C3

(2 REQUIRED)

NOTES

1. SEE DRAWING S-001 FOR GENERAL NOTES AND ABBREVIATIONS.
2. DECK INSERT PLUG IS INTENDED TO BE LIFTED BY AN EXTERNAL CRANE AND STORED OUTSIDE THE M140 COMPLEX.
3. DECK INSERT PLUG FLOOR IS RATED FOR 100PSF LIVE LOAD.
4. DESIGN INTENT IS TO PROVIDE A PLUG FOR THE OPENING IN THE DECK INSERT THAT CAN BE INSTALLED OR REMOVED INDEPENDENTLY OF THE GUARDRAILS DETAILED ON S-514 AND S-524. GUARDRAIL SECTIONS ARE SIZED TO BE HANDLED BY TWO WORKERS AND STORED WITHIN THE M140 COMPLEX.

Scale: 3/8" = 1'-0"

SYM	DESCRIPTION	DATE	APPR
0	ISSUED FOR CONSTRUCTION	10/28/2016	CBC

NAVFAC

STATE OF MAINE
SAMUEL J. THOMAS
No. 14455
LICENSED PROFESSIONAL ENGINEER
10/28/16
SEAL

Colby Company engineering
A/E INFO

APPROVED
David W. Thurnfield
FOR COMMANDER NAVFAC

ACTIVITY
TIM FISHER
C. 2370.6 BRANCH HEAD

SATISFACTORY TO DATE 10/28/2016

DES SJT | DRW ERB | CHK CBC

PMDM PETER STOCKLESS
BRANCH MANAGER IAN BODWELL
FEAD/PMAE AMIN BAHROUR
FIRE PROTECTION PATRICK BAKAJ

DEPARTMENT OF THE NAVY
NAVAL FACILITIES ENGINEERING COMMAND
PUBLIC WORKS DEPARTMENT - MAINE
NAVAL FACILITIES ENGINEERING COMMAND ~ MID-ATLANTIC
NAVAL SHIPYARD - PORTSMOUTH, NH
PORTSMOUTH NAVAL SHIPYARD
KITTERY, ME
DRY DOCK #1 DEFUELING COMPLEX
M-140 COMPLEX
PARTIAL PLANS DECK INSERT PLUG

EPROJECT NO.: 1363311
CONSTR. CONTR. NO. N40085-17-C-5002
NAVFAC DRAWING NO. 12734843
SHEET 60 OF 188

S-411 | DD1-16-924

DRAWFORM REVISION: 10 OCTOBER 2014

10/28/2016 6:37:32 AM X:\297 PORTSMOUTH NAVAL SHIPYARD\297.005.001 - DD#1 DEFUELING COMPLEX DESIGN\DRAWINGS\M140\SHEETS\S-411.DWG

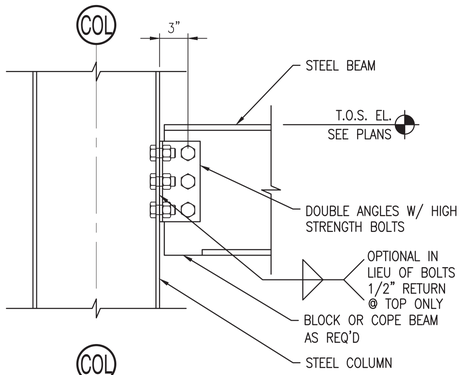

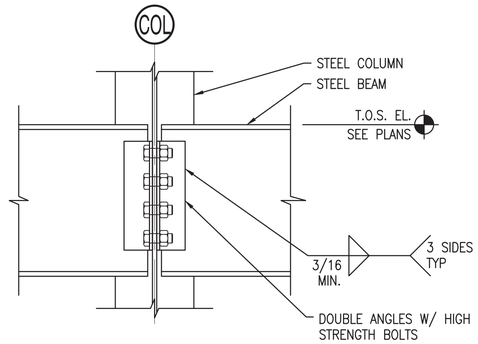

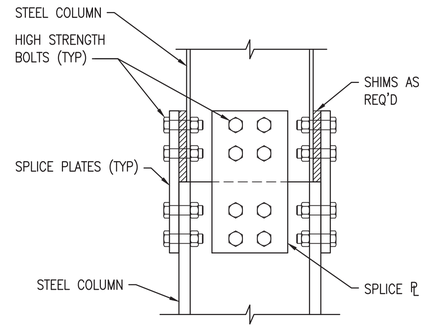

TYP. COLUMN SPLICE

SCALE: 1 1/2'=1'-0"

D4

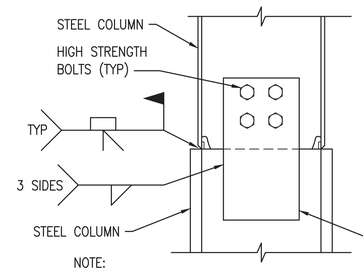

NOTE:
1. SPLICES SHALL DEVELOP THE FULL AXIAL CAPACITY OF THE COLUMN, OR AS SHOWN ON S-600 FOR TENSILE (UPLIFT) DESIGN

NOTES

1. SEE DRAWING S-001 FOR GENERAL NOTES.

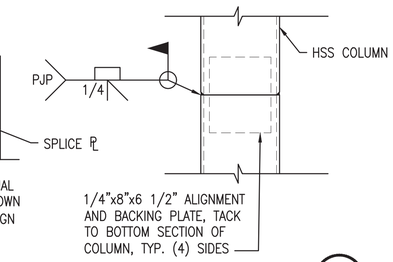

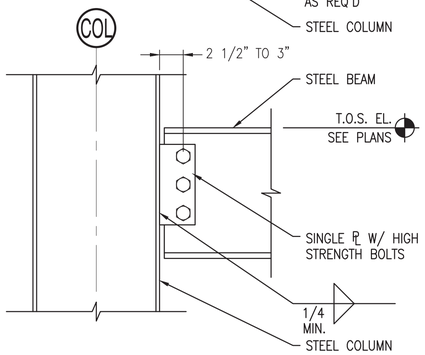

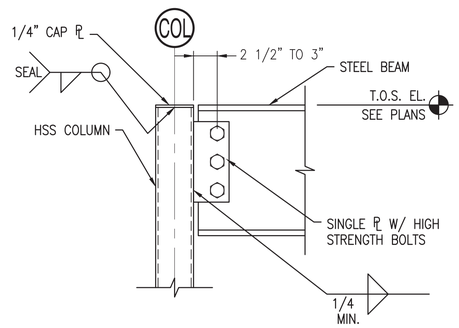

TYP. BEAM TO COLUMN SHEAR CONNECTION

SCALE: 1 1/2'=1'-0"

C2

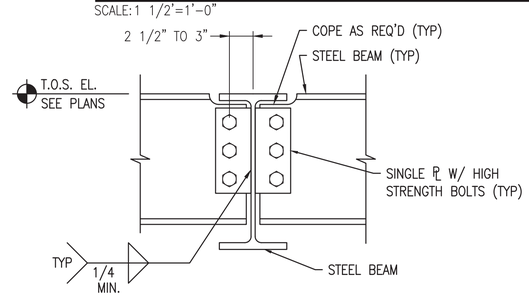

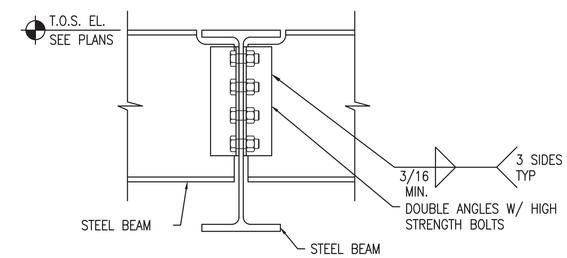

TYP. BEAM TO BEAM SHEAR CONNECTION

SCALE: 1 1/2'=1'-0"

C4

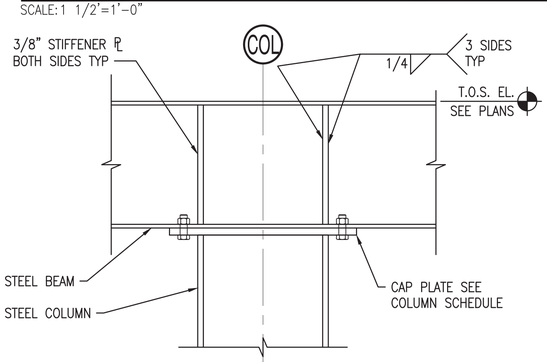

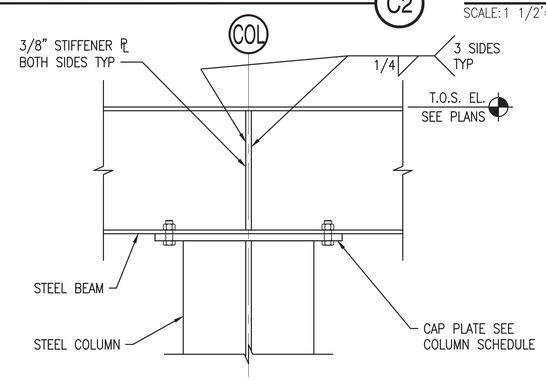

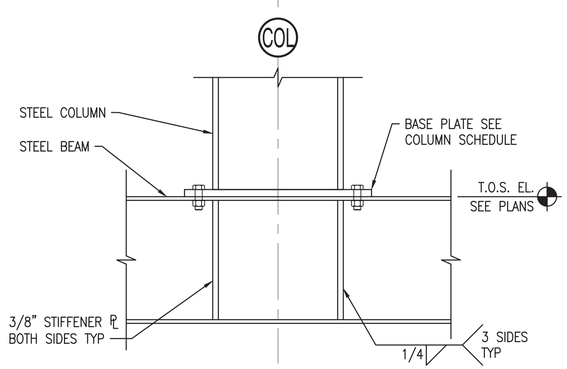

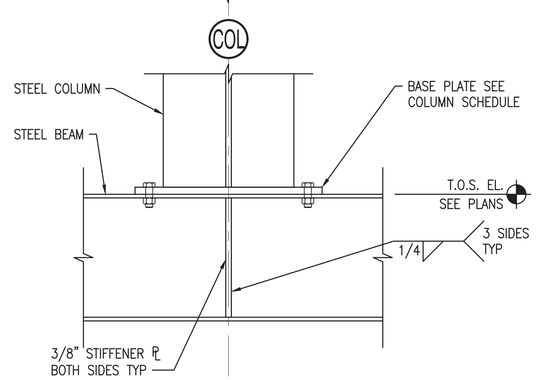

TYP. BEAM TO COLUMN CONNECTION

SCALE: 1 1/2'=1'-0"

A2

0 1/2' 1' 1 1/2'
Scale: 1 1/2" = 1'-0"

SYM	DESCRIPTION	DATE	APPR
0	ISSUED FOR CONSTRUCTION	10/28/2016	CBC

NAVFAC

STATE OF MAINE SAMUEL J. THOMAS No. 13363 LICENSED PROFESSIONAL ENGINEER 10/28/16 SEAL

Colby Company engineering A/E INFO

APPROVED David W. Thurnfield FOR COMMANDER NAVFAC

ACTIVITY TIM FISHER C. 2370.6 BRANCH HEAD

SATISFACTORY TO DATE 10/28/2016

DES SJT DRW BCH CHK CBC

PMDM PETER STOCKLESS

BRANCH MANAGER IAN BODWELL

FEA/DPMAE AMIN BAHROUR

FIRE PROTECTION PATRICK BAKAJ

DEPARTMENT OF THE NAVY
NAVAL FACILITIES ENGINEERING COMMAND
PUBLIC WORKS DEPARTMENT - MAINE

NAVAL FACILITIES ENGINEERING COMMAND ~ MID-ATLANTIC
NAVAL SHIPYARD - PORTSMOUTH, NH

PORTSMOUTH NAVAL SHIPYARD
KITTERY, ME

DRY DOCK #1 DEFUELING COMPLEX
M-140 COMPLEX

TYPICAL CONNECTION DETAILS

EPROJECT NO.: 1363311

CONSTR. CONTR. NO. N40085-17-C-5002

NAVFAC DRAWING NO. 12734844

SHEET 61 OF 188

S-501 DD1-16-925

DRAWFORM REVISION: 10 OCTOBER 2014

10/28/2016 6:37:49 AM X:\297 PORTSMOUTH NAVAL SHIPYARD\297.005.001 - DD#1 DEFUELING COMPLEX DESIGN\DRAWINGS\M140\SHEETS\S-501.DWG

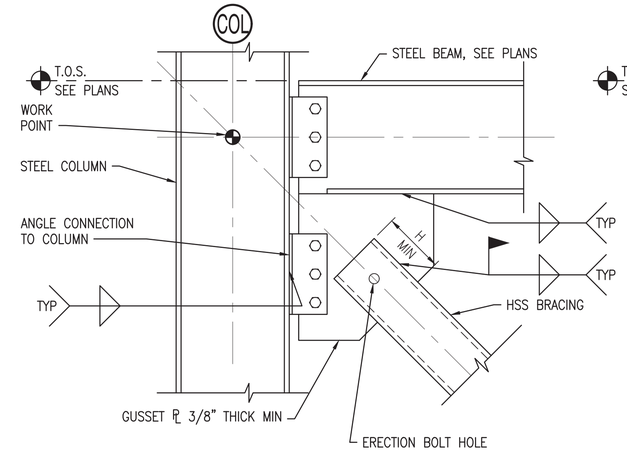

TYP. TUBE BRACE AT BEAM AND COLUMN FLANGE (D1)

SCALE: 1 1/2"=1'-0"

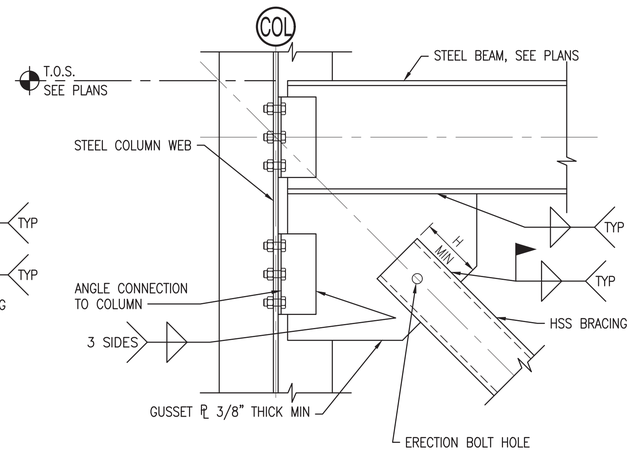

TYP. TUBE BRACE AT BEAM AND COLUMN WEB (D3)

SCALE: 1 1/2"=1'-0"

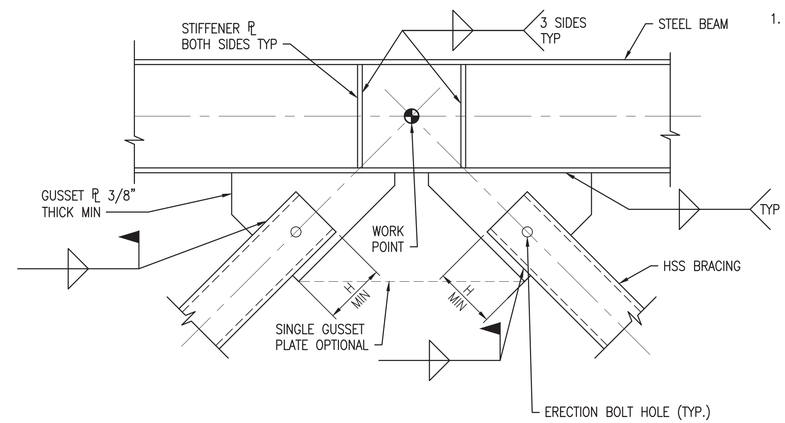

TYP. TUBE BRACE AT BEAM (D4)

SCALE: 1 1/2"=1'-0"

NOTES

1. SEE S-001 FOR GENERAL NOTES.

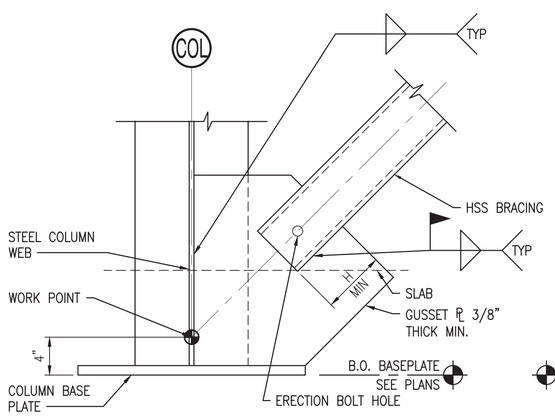

TYP. TUBE BRACE AT COLUMN WEB AND BASE PLATE (A1)

SCALE: 1 1/2"=1'-0"

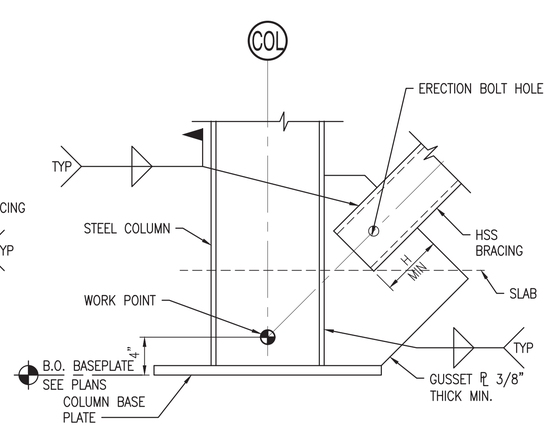

TYP. TUBE BRACE AT COLUMN FLANGE AND BASE PLATE (A2)

SCALE: 1 1/2"=1'-0"

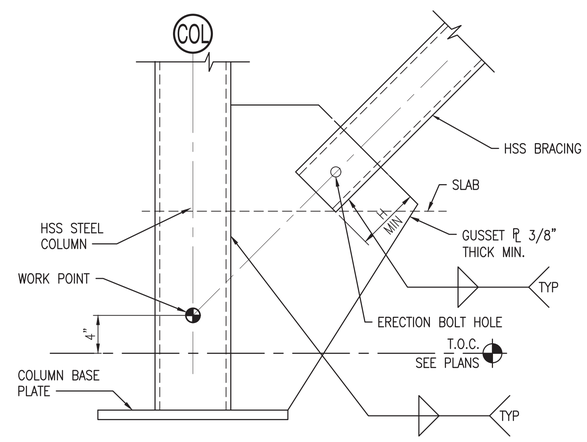

TYP. TUBE BRACE AT TUBE COLUMN AND BASE PLATE (A4)

SCALE: 1 1/2"=1'-0"

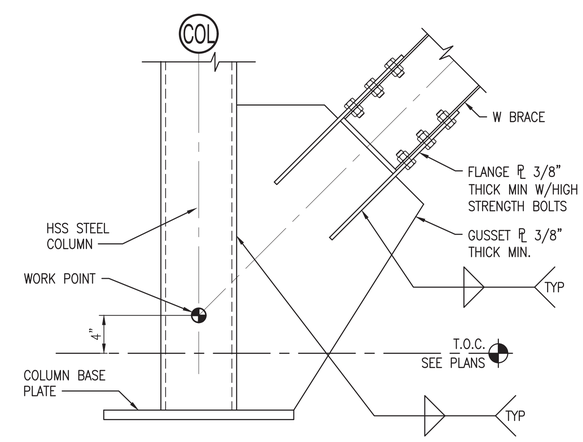

TYP. WIDE FLANGE BRACE AT TUBE COLUMN AND BASE PLATE (A5)

SCALE: 1 1/2"=1'-0"

0 1/2' 1' 1 1/2'
Scale: 1 1/2" = 1'-0"

SYM	DESCRIPTION	DATE	APPR
0	ISSUED FOR CONSTRUCTION	10/28/2016	CBC

NAVFAC

STATE OF MAINE
SAMUEL J. THOMAS
No. 12734845
LICENSED PROFESSIONAL ENGINEER
10/28/16
SEAL

Colby Company engineering
A/E INFO

APPROVED
David W. Thurnfield
FOR COMMANDER NAVFAC

ACTIVITY: TIM FISHER, C. 2370.6 BRANCH HEAD
SATISFACTORY TO DATE 10/28/2016
DES SJT DRW BCH CHK CBC
PMDM PETER STOCKLESS
BRANCH MANAGER IAN BODWELL
FEA/DP/M&E AMIN BAHROUR
FIRE PROTECTION PATRICK BAKAJ

DEPARTMENT OF THE NAVY
NAVAL FACILITIES ENGINEERING COMMAND
PUBLIC WORKS DEPARTMENT - MAINE
NAVAL FACILITIES ENGINEERING COMMAND ~ MID-ATLANTIC
NAVAL SHIPYARD - PORTSMOUTH, NH
PORTSMOUTH NAVAL SHIPYARD
KITTERY, ME
DRY DOCK #1 DEFUELING COMPLEX
M-140 COMPLEX
TYPICAL BRACING CONNECTION DETAILS

EPROJECT NO.: 1363311
CONSTR. CONTR. NO. N40085-17-C-5002
NAVFAC DRAWING NO. 12734845
SHEET 62 OF 188
S-502 DD1-16-926

DRAWFORM REVISION: 10 OCTOBER 2014

10/28/2016 6:38:03 AM X:\297 PORTSMOUTH NAVAL SHIPYARD\297.005.001 - DD#1 DEFUELING COMPLEX DESIGN\DRAWINGS\M140\SHEETS\S-502.DWG

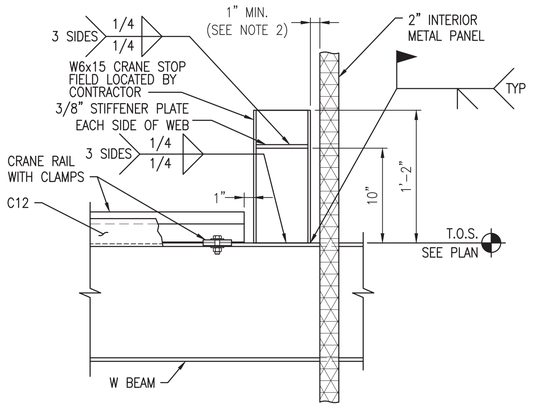

TYP. CRANE STOP DETAIL (D1)

SCALE: 1 1/2"=1'-0" S-519

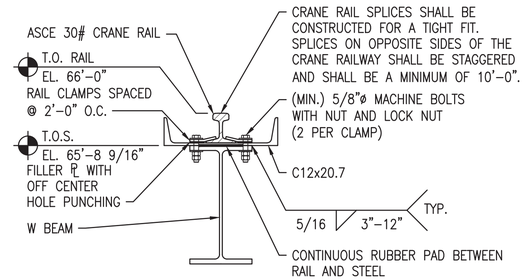

TYP. CRANE RAIL ATTACHMENT DETAIL (D3)

SCALE: 1 1/2"=1'-0" S-503

NOTES

1. SEE SHEET S-001 GENERAL NOTES.
2. FINAL LOCATION OF CRANE STOPS TO BE COORDINATED BY CRANE MANUFACTURER. ALLOW CRANE STOPS TO BE FIELD LOCATED.

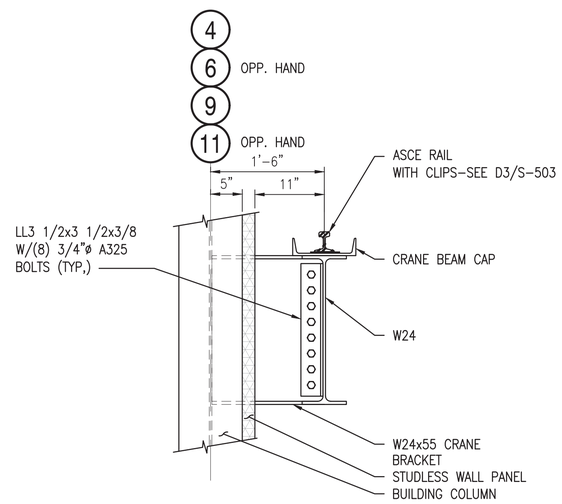

SECTION AT CRANE BEAM ATTACHMENT TO COLUMN (C2)

SCALE: 1"=1'-0" S-106

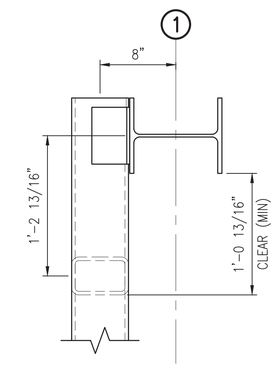

OVERHEAD DOOR DETAIL AT RAILCAR ENTRANCE (B4)

SCALE: 1 1/2"=1'-0" S-503

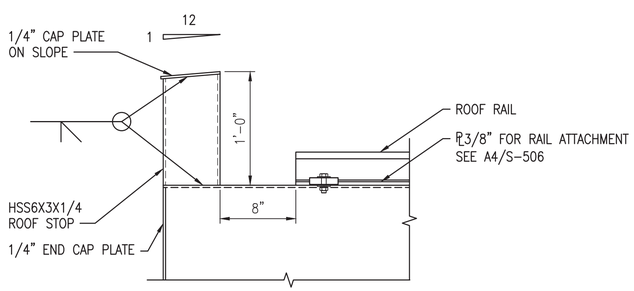

TYPICAL ROOF RAIL STOP DETAIL (A1)

SCALE: 1 1/2"=1'-0" S-107

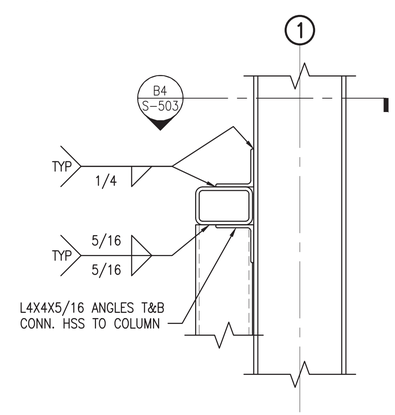

OVERHEAD DOOR DETAIL AT RAILCAR ENTRANCE (A4)

SCALE: 1 1/2"=1'-0" S-205

0 1/2' 1' 2'
Scale: 1" = 1'-0"

0 1/2' 1' 1 1/2'
Scale: 1 1/2" = 1'-0"

SYM	DESCRIPTION	DATE	APPR
0	ISSUED FOR CONSTRUCTION	10/28/2016	CBC

NAVFAC

STATE OF MAINE
SAMUEL J. THOMAS
No. 12345
LICENSED PROFESSIONAL ENGINEER
10/28/16
SEAL

Colby Company engineering
A/E INFO

APPROVED
David W. Thurnfield
FOR COMMANDER NAVFAC

ACTIVITY
TIM FISHER
C. 2370.6 BRANCH HEAD

SATISFACTORY TO DATE 10/28/2016

DES SJT | DRW BCH | CHK CBC

PM/DM PETER STOCKLESS

BRANCH MANAGER IAN BODWELL

FEAD/PM&E AMIN BAHROUR

FIRE PROTECTION PATRICK BAKAJ

DEPARTMENT OF THE NAVY
NAVAL FACILITIES ENGINEERING COMMAND
PUBLIC WORKS DEPARTMENT - MAINE

NAVAL FACILITIES ENGINEERING COMMAND – MID-ATLANTIC
NAVAL SHIPYARD - PORTSMOUTH, NH

PORTSMOUTH NAVAL SHIPYARD
KITTERY, ME

DRY DOCK #1 DEFUELING COMPLEX
M-140 COMPLEX

CRANE RAIL AND WHEEL STOP DETAILS

EPROJECT NO.: 1363311

CONSTR. CONTR. NO. N40085-17-C-5002

NAVFAC DRAWING NO. 12734846

SHEET 63 OF 188

S-503 | DD1-16-927

DRAWFORM REVISION: 10 OCTOBER 2014

10/28/2016 6:38:20 AM X:\297 PORTSMOUTH NAVAL SHIPYARD\297.005.001 - DD#1 DEFUELING COMPLEX DESIGN\DRAWINGS\M140\SHEETS\S-503.DWG

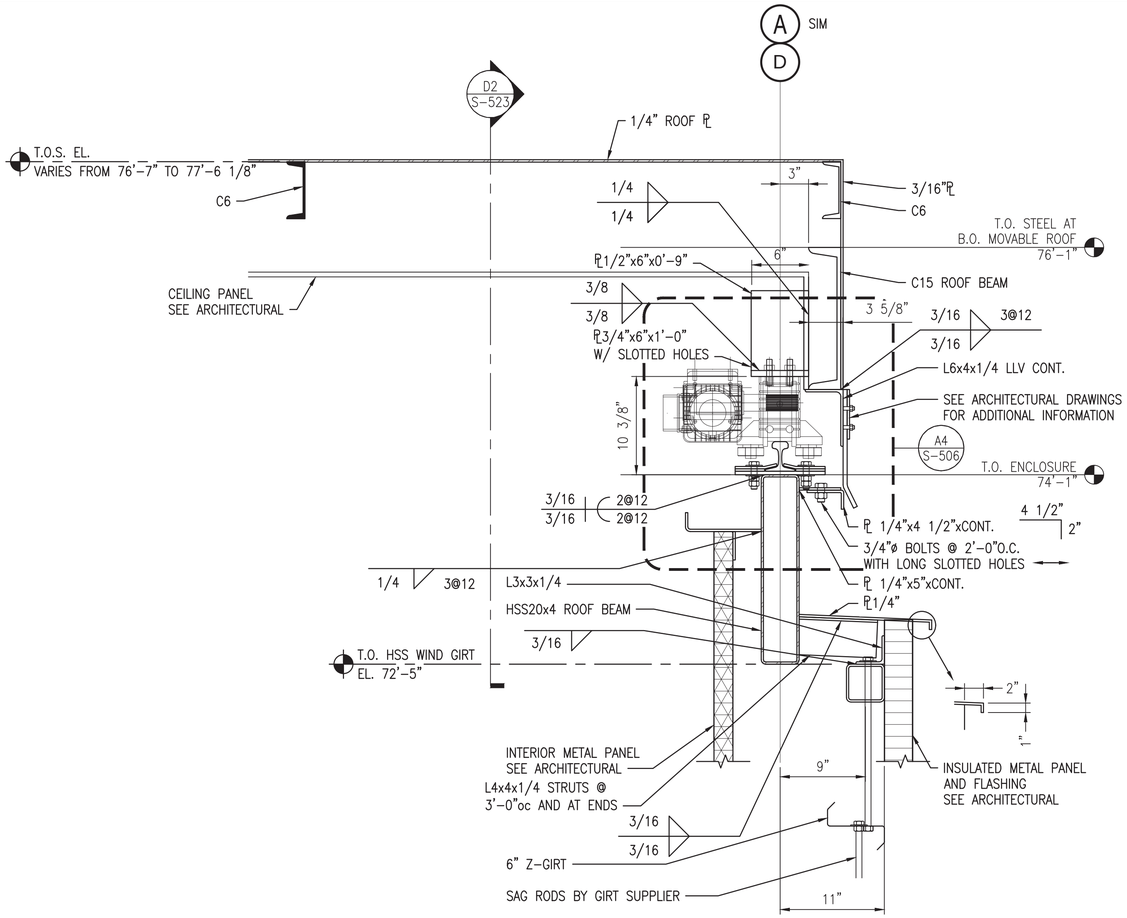

SECTION @ MOVABLE ROOF - SIDEWALL

SCALE: 1 1/2"=1'-0"

S-107, S-108, S-109 B1

NOTES

1. SEE SHEET S-001 FOR GENERAL NOTES.

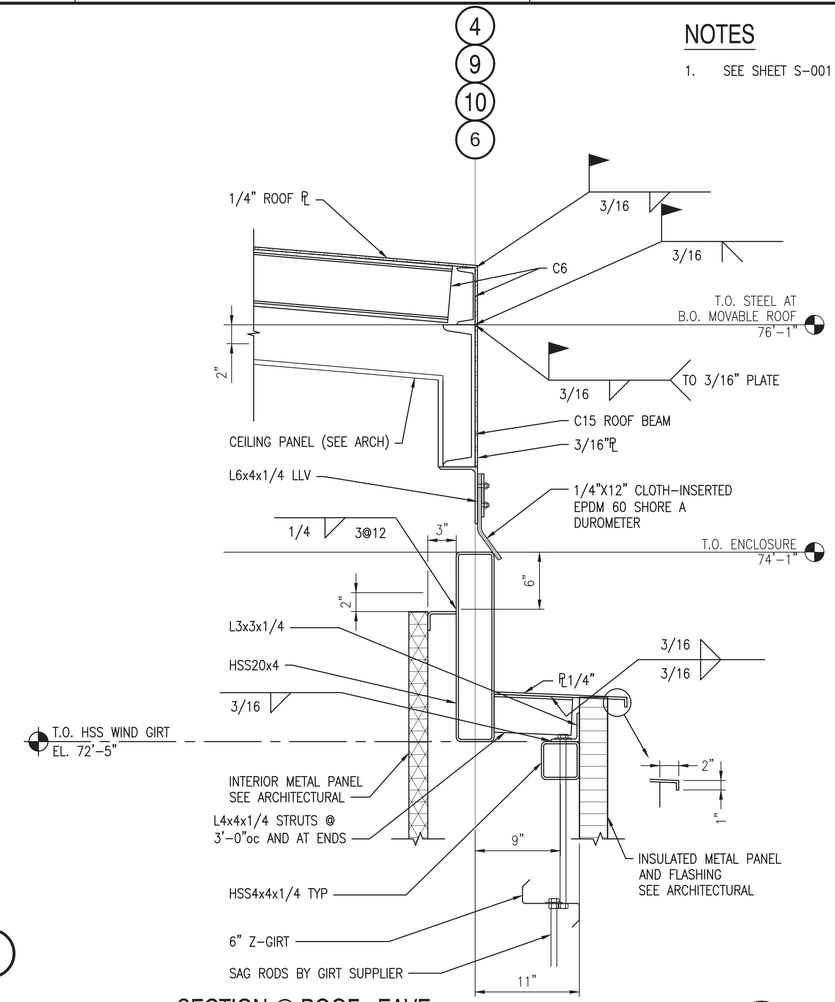

SECTION @ ROOF - EAVE

SCALE: 1 1/2"=1'-0"

S-107, S-108, S-109 B4

0 1/2' 1' 1 1/2'
Scale: 1 1/2" = 1'-0"

SYM	DESCRIPTION	DATE	APPR
0	ISSUED FOR CONSTRUCTION	10/28/2016	CBC

NAVFAC

STATE OF MAINE
SAMUEL J. THOMAS
No. 13885
LICENSED PROFESSIONAL ENGINEER
10/28/16
SEAL

Colby Company engineering
A/E INFO

APPROVED
David W. Thurnfield
FOR COMMANDER NAVFAC

ACTIVITY
TIM FISHER
C. 2370.6 BRANCH HEAD

SATISFACTORY TO DATE 10/28/2016
DES SJT DRW BCH CHK CBC
PMOM PETER STOCKLESS
BRANCH MANAGER IAN BODWELL
READIPMAE AMIN BAHROUR
FIRE PROTECTION PATRICK BAKAJ

DEPARTMENT OF THE NAVY
NAVAL FACILITIES ENGINEERING COMMAND
PUBLIC WORKS DEPARTMENT - MAINE
NAVAL FACILITIES ENGINEERING COMMAND ~ MID-ATLANTIC
NAVAL SHIPYARD - PORTSMOUTH, NH
PORTSMOUTH NAVAL SHIPYARD
KITTERY, ME
DRY DOCK #1 DEFUELING COMPLEX
M-140 COMPLEX
MOVABLE ROOF DETAILS

EPROJECT NO.: 1363311
CONSTR. CONTR. NO. N40085-17-C-5002
NAVFAC DRAWING NO. 12734847
SHEET 64 OF 188
S-504 DD1-16-928

DRAWFORM REVISION: 10 OCTOBER 2014

10/28/2016 6:38:32 AM X:\297 PORTSMOUTH NAVAL SHIPYARD\297.005.001 - DD#1 DEFUELING COMPLEX DESIGN\DRAWINGS\M140\SHEETS\S-504.DWG

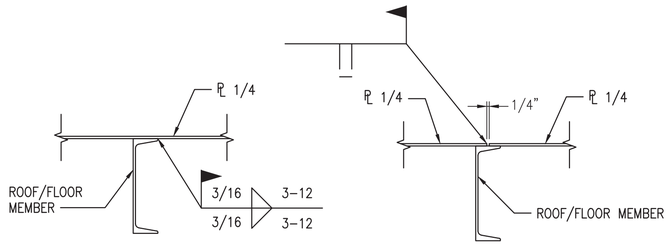

NOTES:
1. USE THESE DETAILS UNLESS OTHERWISE NOTED
2. THE CONTRACTOR MAY DECIDE WHETHER TO USE ONE OR A COMBINATION OF THESE DETAILS WHEN ATTACHING ROOF PLATE TO FRAMING STEEL.
3. SEAL WELDS ARE REQUIRED AT ROOFS, AS WELL AS IN CERTAIN AREAS FOR ENVIRONMENTAL CONTROLS – SEE NOTES ON FRAMING PLANS

TYP PLATE TO FRAMING ATTACHMENT (C1)
SCALE: 1 1/2"=1'-0"

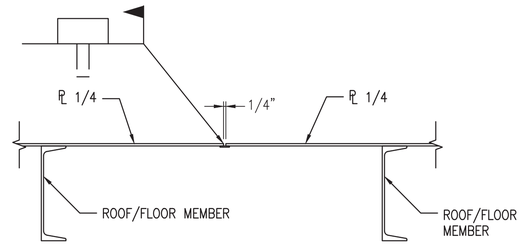

NOTE:
1. USE WHEN SEAM JOINT CAN NOT FALL OVER FRAMING MEMBER.

TYP PLATE SEAM JOINT (C3)
SCALE: 1 1/2"=1'-0"

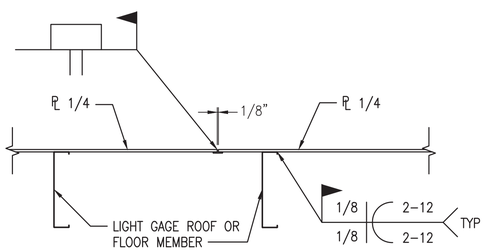

NOTE:
1. LOCATE PLATE SEAM AWAY FROM LIGHT GAGE FRAMING MEMBERS.

TYP PLATE TO LIGHT GAGE FRAMING ATTACHMENT (B1)
SCALE: 1 1/2"=1'-0"

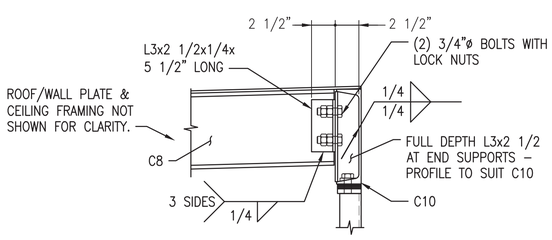

TYPICAL END SUPPORT FRAMING DETAIL (A1)
SCALE: 1 1/2"=1'-0" S-505

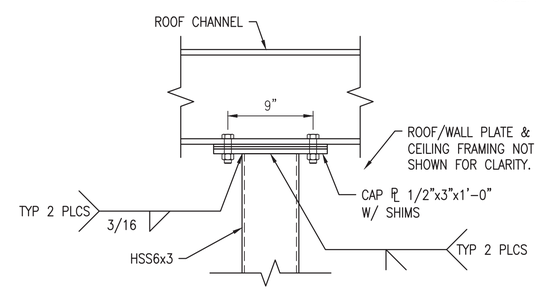

CAP PLATE AT INTERIOR SUPPORTS (B3)
SCALE: 1 1/2"=1'-0" S-505

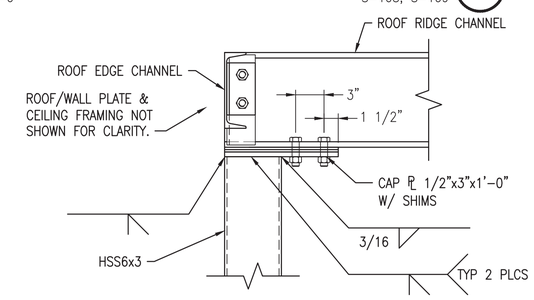

CAP PLATE AT END SUPPORTS (B5)
SCALE: 1 1/2"=1'-0" S-505

NOTES

1. SEE SHEET S-001 FOR GENERAL NOTES.

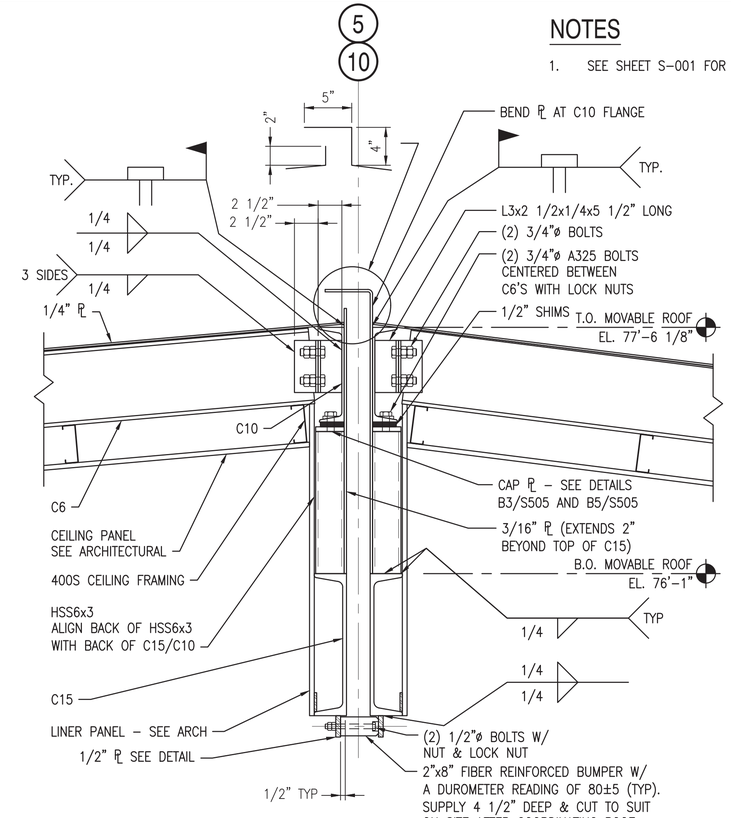

SECTION @ ROOF - RIDGE (C5)
SCALE: 1 1/2"=1'-0" S-108, S-109

0 1/2' 1' 1 1/2'
Scale: 1 1/2" = 1'-0"

SYM	DESCRIPTION	DATE	APPR
0	ISSUED FOR CONSTRUCTION	10/28/2016	CBC

NAVFAC

STATE OF MAINE
SAMUEL J. THOMAS
No. 12734848
LICENSED PROFESSIONAL ENGINEER
10/28/16
SEAL

Colby Company engineering
A/E INFO

APPROVED
David W. Thurnfield
FOR COMMANDER NAVFAC

ACTIVITY
TIM FISHER
C. 2370.6 BRANCH HEAD

SATISFACTORY TO DATE 10/28/2016

DES	SJT	DRW	BCH	CHK	CBC

PMDM: PETER STOCKLESS
BRANCH MANAGER: IAN BODWELL
FEAD/PM&E: AMIN BAHROUR
FIRE PROTECTION: PATRICK BAKAJ

DEPARTMENT OF THE NAVY
NAVAL FACILITIES ENGINEERING COMMAND
PUBLIC WORKS DEPARTMENT - MAINE

NAVAL FACILITIES ENGINEERING COMMAND ~ MID-ATLANTIC
NAVAL SHIPYARD - PORTSMOUTH, NH

PORTSMOUTH NAVAL SHIPYARD
KITTERY, ME
DRY DOCK #1 DEFUELING COMPLEX
M-140 COMPLEX

MOVABLE ROOF DETAILS

EPROJECT NO.: 1363311
CONSTR. CONTR. NO. N40085-17-C-5002
NAVFAC DRAWING NO. 12734848
SHEET 65 OF 188

S-505 | DD1-16-929

DRAWFORM REVISION: 10 OCTOBER 2014

10/28/2016 6:39:05 AM X:\297 PORTSMOUTH NAVAL SHIPYARD\297.005.001 - DD#1 DEFUELING COMPLEX DESIGN\DRAWINGS\M140\SHEETS\S-505.DWG

NOTES

1. SEE SHEET S-001 FOR GENERAL NOTES.

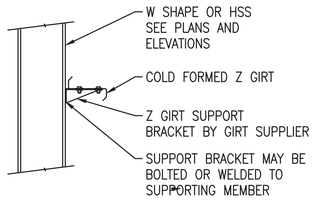

Z-GIRT ATTACHMENT DETAIL (D1)
SCALE: 3/4"=1'-0"

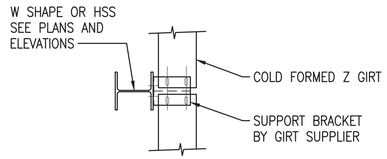

Z-GIRT ATTACHMENT DETAIL (D2)
SCALE: 3/4"=1'-0"

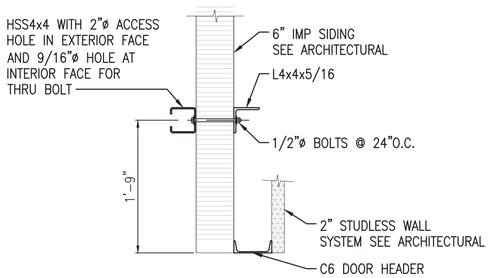

PASSAGEWAY CONNECTION (C1)
SCALE: 1"=1'-0" S-206A

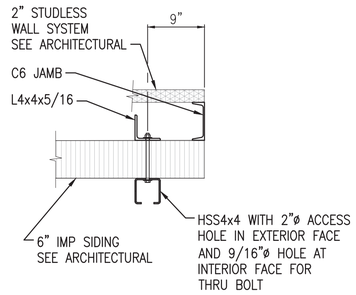

PASSAGEWAY CONNECTION (C2)
SCALE: 1"=1'-0" S-206A

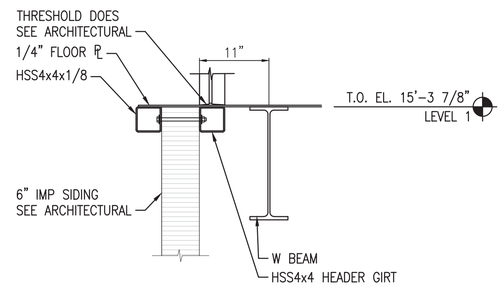

PASSAGEWAY CONNECTION AT HEADER GIRT (C3)
SCALE: 1"=1'-0" S-206A

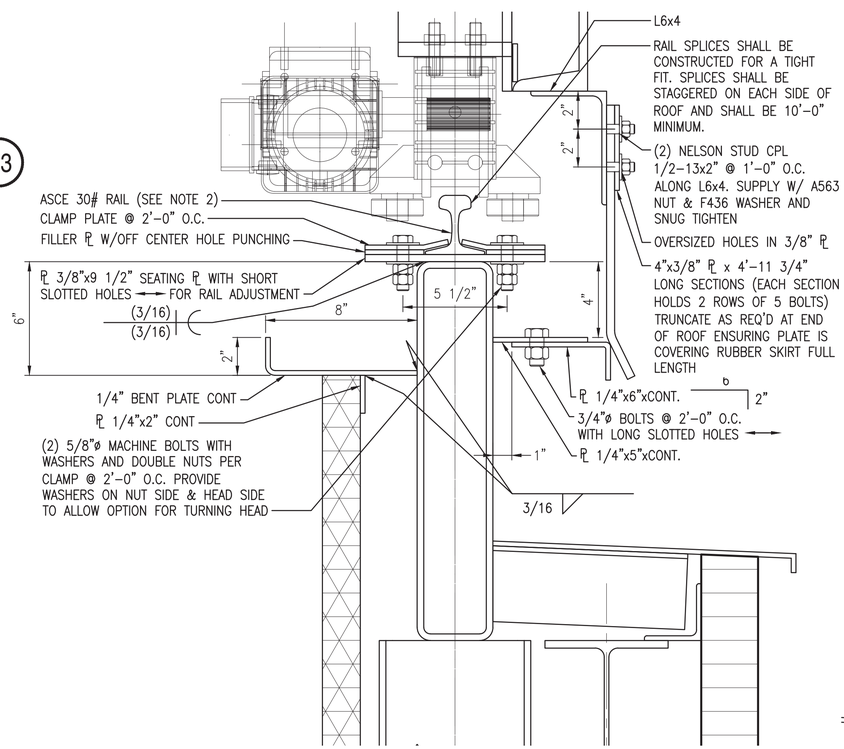

MOVABLE ROOF MOTOR DETAIL (A4)
SCALE: 3" = 1'-0" S-504

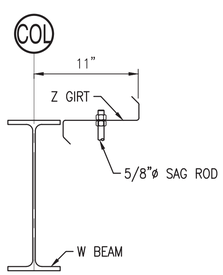

SECTION AT "Z" GIRT AND W BEAM (A1)
SCALE: 1 1/2"=1'-0" S-202, S-202A

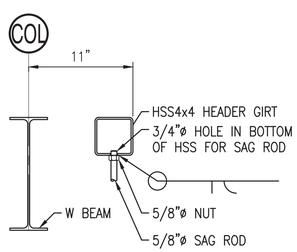

SECTION AT HEADER GIRT AND W BEAM (A2)
SCALE: 1 1/2"=1'-0" S-202, S-202A

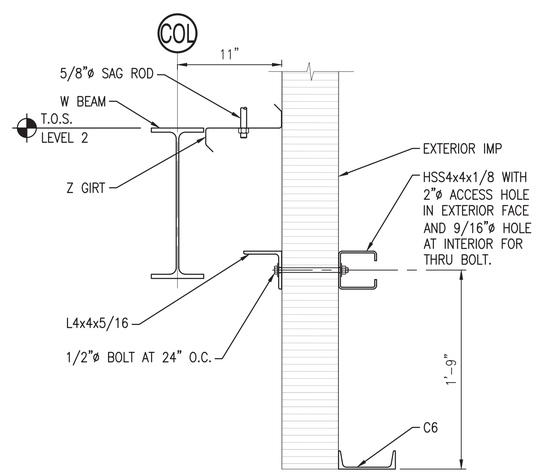

SECTION AT DOOR LEVEL 1 (A3)
SCALE: 1 1/2"=1'-0" S-202

Scale: 3/4" = 1'-0" (0, 1', 2', 3')
Scale: 1" = 1'-0" (0, 1/2', 1', 2')
Scale: 1 1/2" = 1'-0" (0, 1/2', 1', 1 1/2')
Scale: 3" = 1'-0" (0, 3", 6", 9")

SYM	DESCRIPTION	DATE	APPR
0	ISSUED FOR CONSTRUCTION	10/28/2016	CBC

NAVFAC

STATE OF MAINE — SAMUEL J. THOMAS — LICENSED PROFESSIONAL ENGINEER — 10/28/16 — SEAL

Colby Company engineering — A/E INFO

APPROVED: David W. Thurnfield — FOR COMMANDER NAVFAC

ACTIVITY: TIM FISHER, C. 2370.6 BRANCH HEAD

SATISFACTORY TO: DATE 10/28/2016

DES	SJT	DRW	BCH	CHK	CBC

PMDM	PETER STOCKLESS
BRANCH MANAGER	IAN BODWELL
FEAD/PMAE	AMIN BAHROUR
FIRE PROTECTION	PATRICK BAKAJ

DEPARTMENT OF THE NAVY
NAVAL FACILITIES ENGINEERING COMMAND
PUBLIC WORKS DEPARTMENT - MAINE
NAVAL FACILITIES ENGINEERING COMMAND ~ MID-ATLANTIC
NAVAL SHIPYARD - PORTSMOUTH, NH
PORTSMOUTH NAVAL SHIPYARD
KITTERY, ME
DRY DOCK #1 DEFUELING COMPLEX
M-140 COMPLEX
GIRT CONNECTION DETAILS

EPROJECT NO.: 1363311

CONSTR. CONTR. NO.: N40085-17-C-5002

NAVFAC DRAWING NO.: 12734849

SHEET 66 OF 188

S-506 | DD1-16-930

DRAWFORM REVISION: 10 OCTOBER 2014

10/28/2016 6:39:18 AM X:\297 PORTSMOUTH NAVAL SHIPYARD\297.005.001 - DDH1 DEFUELING COMPLEX DESIGN\DRAWINGS\M140\SHEETS\S-506.DWG

NOTES

1. SEE SHEET S-001 FOR GENERAL NOTES.

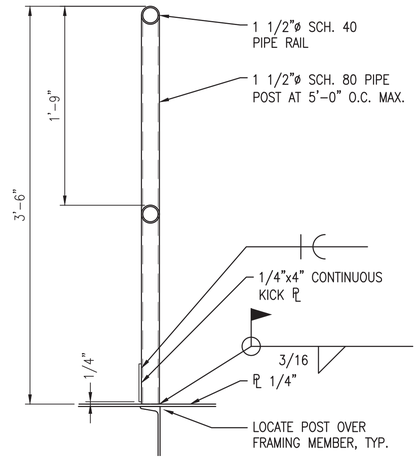

TYP GUARDRAIL TO PLATE CONNECTION (C1)
SCALE: 1 1/2"=1'-0"

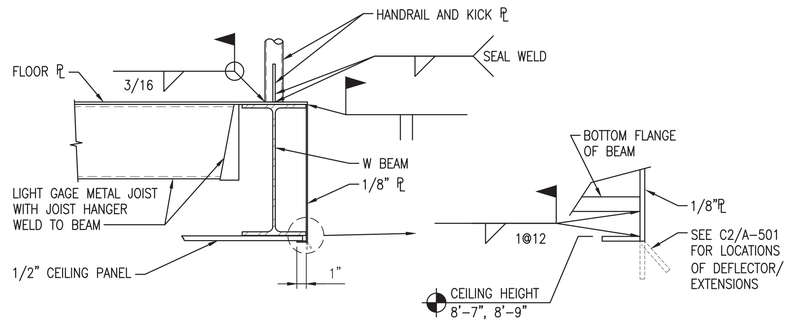

SECTION AT FLOOR OPENING (D3)
SCALE: 1 1/2"=1'-0" S-404

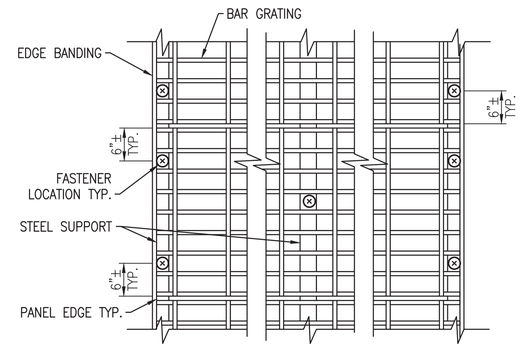

TYPICAL FASTENER LOCATION PLAN (C4)
SCALE: N.T.S.

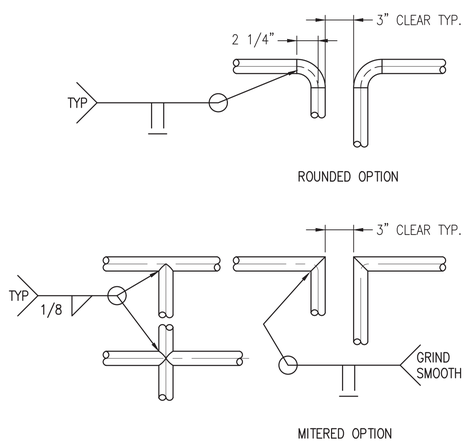

TYP. GUARDRAIL JOINTS (B1)
SCALE: 1 1/2"=1'-0"

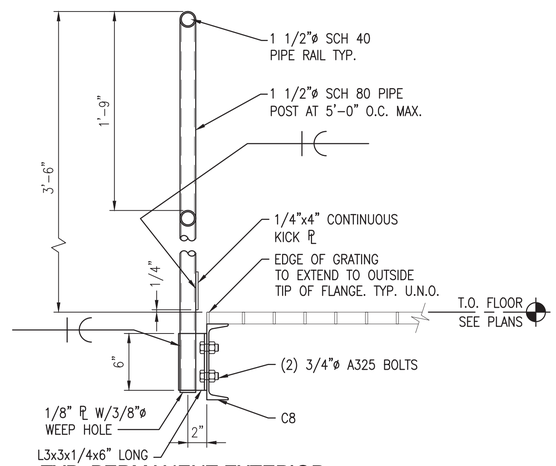

TYP. PERMANENT EXTERIOR GUARDRAIL AT CHANNEL (B2)
SCALE: 1 1/2"=1'-0"

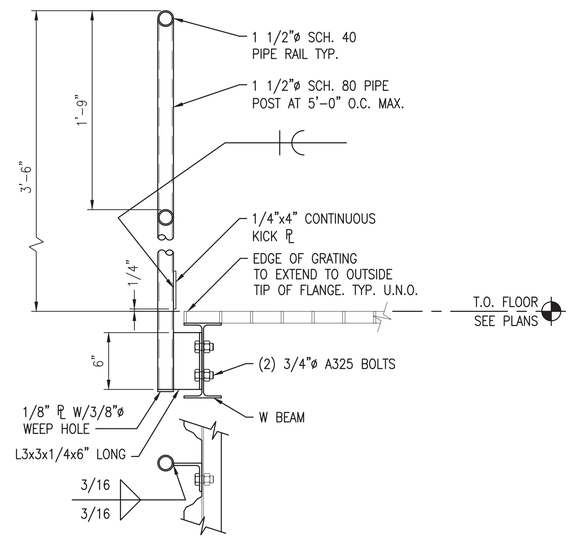

TYP. PERMANENT EXTERIOR GUARDRAIL AT W BEAM (B3)
SCALE: 1 1/2"=1'-0"

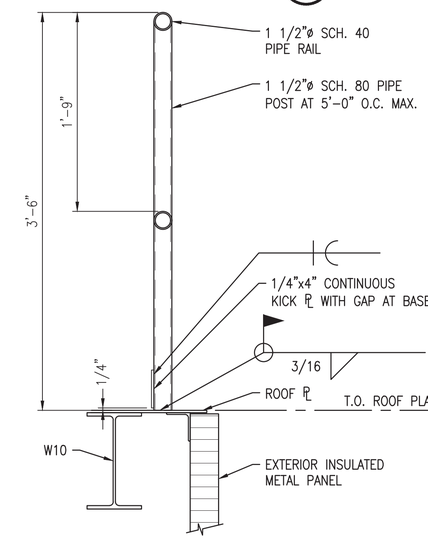

TYP. PERMANENT EXTERIOR GUARDRAIL AT ROOF PLATE (B4)
SCALE: 1 1/2"=1'-0"

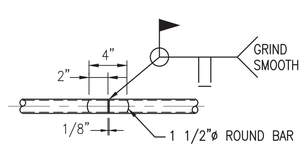

TYP. GUARDRAIL FIELD SPLICE (A1)
SCALE: 1 1/2"=1'-0"

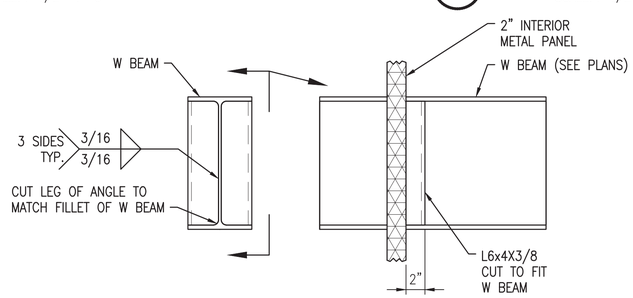

TYP. W BEAM METAL PANEL PENETRATION DETAIL (A2)
SCALE: 1 1/2"=1'-0" S-519, S-522

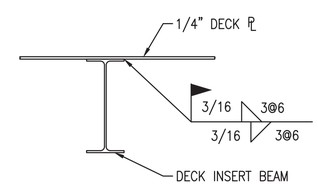

TYPICAL DECK PLATE TO BEAM CONNECTION (A4)
SCALE: 1 1/2"=1'-0"

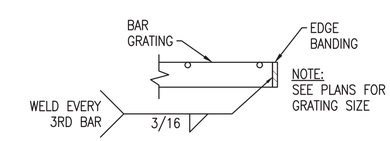

GRATING FINISHED EDGE DETAIL (A5)
SCALE: N.T.S.

0 1/2' 1' 1 1/2'
Scale: 1 1/2" = 1'-0"

SYM	DESCRIPTION	DATE	APPR
0	ISSUED FOR CONSTRUCTION	10/28/2016	CBC

NAVFAC

STATE OF MAINE SAMUEL J. THOMAS No. 12734 LICENSED PROFESSIONAL ENGINEER 10/28/16 SEAL

Colby Company engineering A/E INFO

APPROVED David W. Thurnfield FOR COMMANDER NAVFAC

ACTIVITY: TIM FISHER, C. 2370.6 BRANCH HEAD
SATISFACTORY TO DATE 10/28/2016
DES SJT DRW BCH CHK CBC
PM/DM PETER STOCKLESS
BRANCH MANAGER IAN BODWELL
FEAD/PM&E AMIN BAHROUR
FIRE PROTECTION PATRICK BAKAJ

DEPARTMENT OF THE NAVY
NAVAL FACILITIES ENGINEERING COMMAND ~ MID-ATLANTIC
PUBLIC WORKS DEPARTMENT - MAINE
NAVAL FACILITIES ENGINEERING COMMAND
NAVAL SHIPYARD - PORTSMOUTH, NH
PORTSMOUTH NAVAL SHIPYARD
KITTERY, ME
DRY DOCK #1 DEFUELING COMPLEX
M-140 COMPLEX
PLATFORMS AND WALL PENETRATION DETAILS

EPROJECT NO.: 1363311
CONSTR. CONTR. NO. N40085-17-C-5002
NAVFAC DRAWING NO. 12734850
SHEET 67 OF 188
S-507 DD1-16-931

DRAWFORM REVISION: 10 OCTOBER 2014

10/28/2016 6:39:47 AM X:\297 PORTSMOUTH NAVAL SHIPYARD\297.005.001 - DD#1 DEFUELING COMPLEX DESIGN\DRAWINGS\M140\SHEETS\S-507.DWG

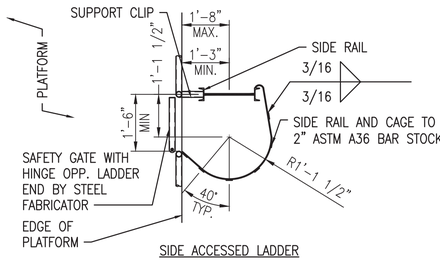

SIDE ACCESSED LADDER

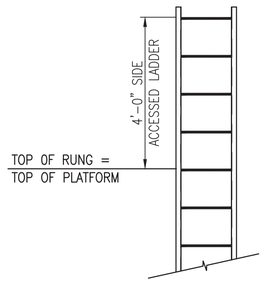

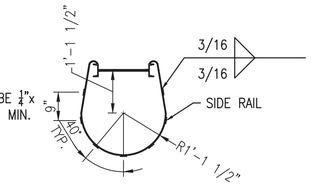

DETAIL AT INTERMEDIATE HOOP
PASS THROUGH LADDER

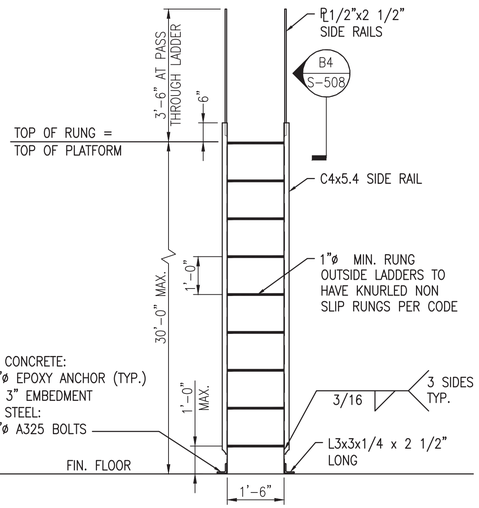

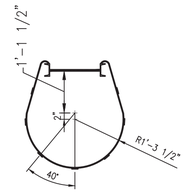

DETAIL AT BOTTOM HOOP

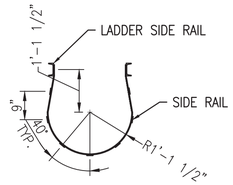

DETAIL AT TOP HOOP

SIDE EXIT LADDER

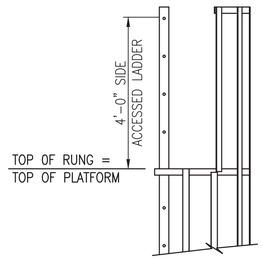

PASS THROUGH LADDER

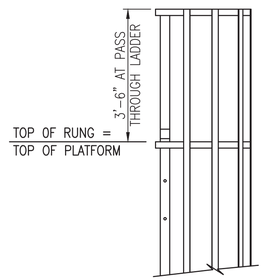

FOR GRATING

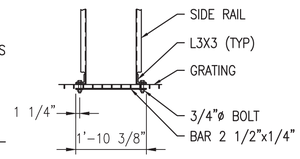

TYP. FIXED LADDER AND CAGE DETAILS (C1)

SCALE: 1/2"=1'-0"

NOTES

1. SEE SHEET S-001 FOR GENERAL NOTES.

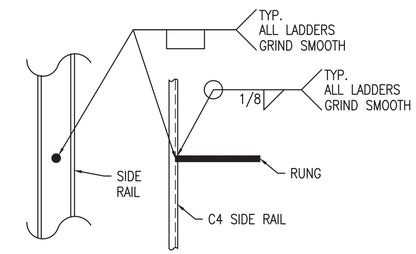

TYP. RUNG WELDING DETAIL (D5)

SCALE:1/2"=1'-0"

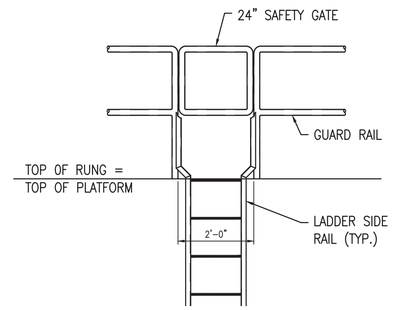

TYP. SAFETY GATE AT TOP OF LADDER (C4)

SCALE: 1/2"=1'-0"

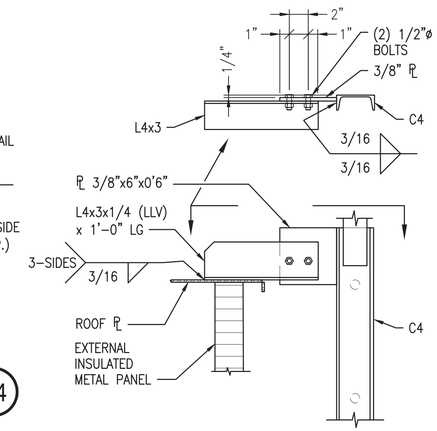

TYP. LADDER ATTACHMENT AT ROOF PLATE DETAIL (B5)

SCALE: 1 1/2"=1'-0"

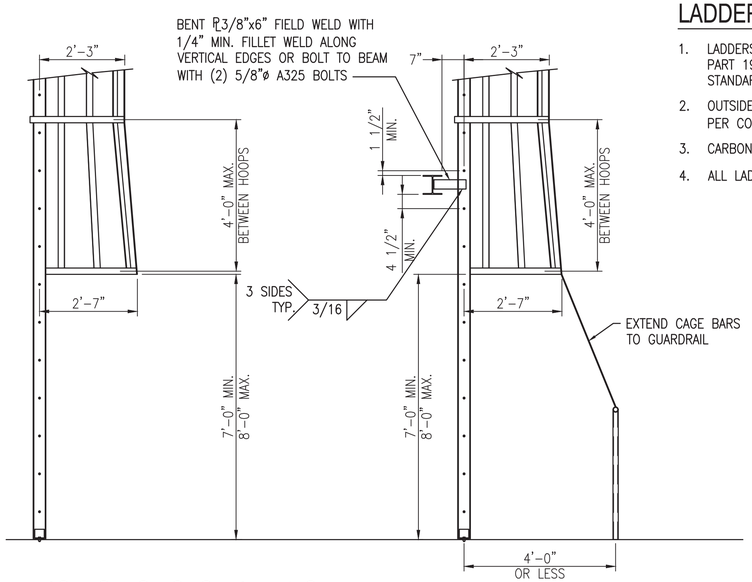

BOTTOM OF CAGE DETAILS (A1)

SCALE: 1/2"=1'-0"

LADDER NOTES

1. LADDERS SHALL BE FABRICATED TO 29 CFR CH. XVII, PART 1910 – OCCUPATIONAL SAFETY AND HEALTH STANDARDS 1910.27, FIXED LADDERS.
2. OUTSIDE LADDERS TO HAVE KNURLED NON SLIP RUNGS PER CODE, (1" MIN. DIAMETER).
3. CARBON STEEL LADDERS SHALL BE PAINTED.
4. ALL LADDERS GREATER THAN 20'-0" SHALL HAVE CAGES.

0 1' 2' 4'
Scale: 1/2" = 1'-0"
0 1/2' 1' 1 1/2'
Scale: 1 1/2" = 1'-0"

SYM	DESCRIPTION	DATE	APPR
0	ISSUED FOR CONSTRUCTION	10/28/2016	CBC

NAVFAC

STATE OF MAINE — SAMUEL J. THOMAS — LICENSED PROFESSIONAL ENGINEER — 10/28/16 — SEAL

Colby Company engineering — A/E INFO

APPROVED: David W. Thurnfield — FOR COMMANDER NAVFAC

ACTIVITY: TIM FISHER, C. 2370.6 BRANCH HEAD — SATISFACTORY TO DATE 10/28/2016

DES SJT	DRW BCH	CHK CBC	
PM/DM	PETER STOCKLESS		
BRANCH MANAGER	IAN BODWELL		
FEA/DP/M&E	AMIN BAHROUR		
FIRE PROTECTION	PATRICK BAKAJ		

DEPARTMENT OF THE NAVY
NAVAL FACILITIES ENGINEERING COMMAND – MID-ATLANTIC
PUBLIC WORKS DEPARTMENT - MAINE
NAVAL FACILITIES ENGINEERING COMMAND
NAVAL SHIPYARD - PORTSMOUTH, NH
PORTSMOUTH NAVAL SHIPYARD
KITTERY, ME
DRY DOCK #1 DEFUELING COMPLEX
M-140 COMPLEX
LADDER DETAILS

EPROJECT NO.: 1363311
CONSTR. CONTR. NO.: N40085-17-C-5002
NAVFAC DRAWING NO.: 12734851
SHEET 68 OF 188
S-508 | DD1-16-932

DRAWFORM REVISION: 10 OCTOBER 2014

10/28/2016 6:40:06 AM X:\297 PORTSMOUTH NAVAL SHIPYARD\297.005.001 - DDH1 DEFUELING COMPLEX DESIGN\DRAWINGS\M140\SHEETS\S-508.DWG

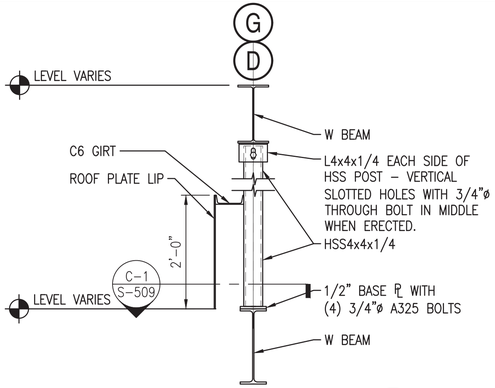

SECTION AT HSS WIND COLUMN (D1)

SCALE: 3/4"=1'-0" S-102, S-102A

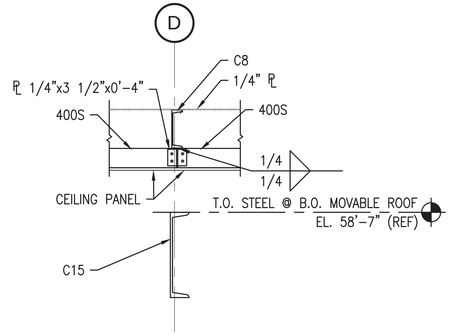

SECTION AT CEILING INTERMEDIATE (D2)

SCALE: 3/4"=1'-0"

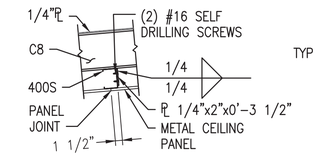

SECTION AT ROOF/CEILING MIDPOINT (D3)

SCALE: 3/4"=1'-0"

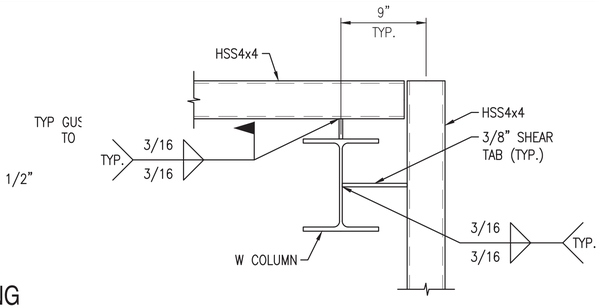

TYPICAL HEADER GIRT CORNER DETAIL (D4)

SCALE: 1 1/2"=1'-0" S-102A

NOTES

1. SEE SHEET S-001 FOR GENERAL NOTES.

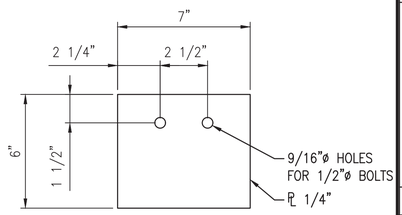

SECTION - TARGET PLATE (D5)

SCALE: 3"=1'-0" S-523

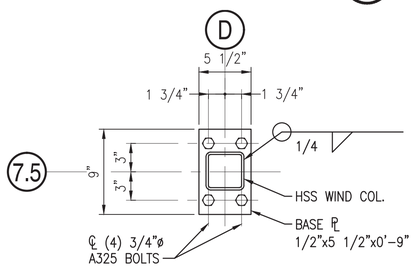

SECTION AT WIND COLUMN BASE PLATE (C1)

SCALE: 1 1/2"=1'-0" S-509

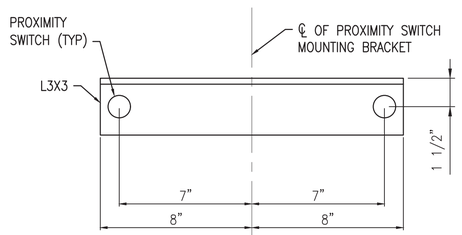

NOTE:
COORDINATE WITH CONTROLS SENSORS REQUIREMENTS FOR MOUNTING BRACKET SIZE AND LOCATION

PROXIMITY SWITCH MOUNTING BRACKET (C2)

SCALE: 3"=1'-0" S-523

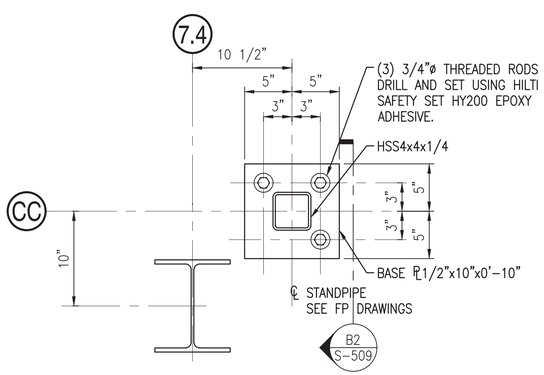

DETAIL STANDPIPE BASE PLATE (B1)

SCALE: 1 1/2"=1'-0" S-100

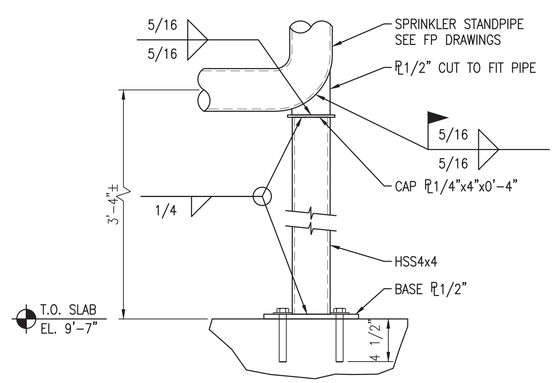

SECTION AT STANDPIPE (B2)

SCALE: 1 1/2"=1'-0" S-509

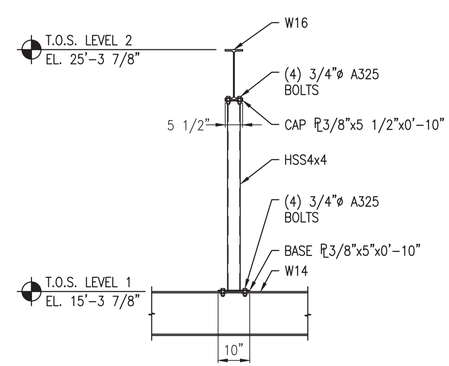

SECTION AT PLATFORM HANGER (B2)

SCALE: 1/2"=1'-0" S-101, S-102

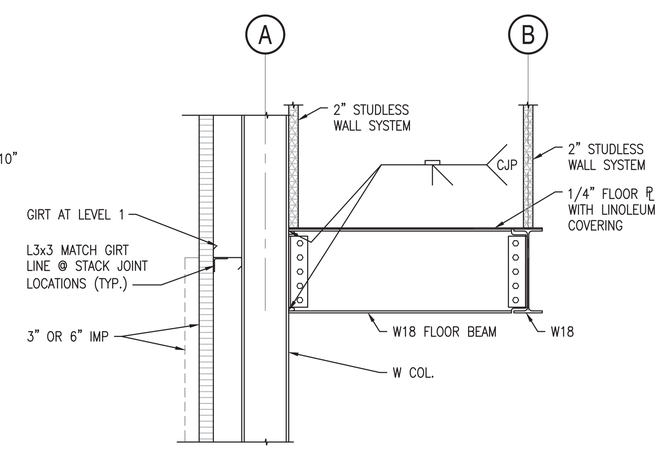

SECTION AT LEVEL 1 (B5)

SCALE: 1 1/2"=1'-0" S-101, S-101A

Scale: 3" = 1'-0"
Scale: 1 1/2" = 1'-0"
Scale: 3/4" = 1'-0"
Scale: 1/2" = 1'-0"

SYM	DESCRIPTION	DATE	APPR
0	ISSUED FOR CONSTRUCTION	10/28/2016	CBC

NAVFAC

STATE OF MAINE SAMUEL J. THOMAS No. 12734 LICENSED PROFESSIONAL ENGINEER 10/28/16 SEAL

Colby Company engineering A/E INFO

APPROVED David W. Thurnfield FOR COMMANDER NAVFAC

ACTIVITY: TIM FISHER C. 2370.6 BRANCH HEAD

SATISFACTORY TO DATE 10/28/2016

DES SJT DRW BCH CHK CBC

PMDM PETER STOCKLESS

BRANCH MANAGER IAN BODWELL

FEA/PM&E AMIN BAHROUR

FIRE PROTECTION PATRICK BAKAJ

DEPARTMENT OF THE NAVY
NAVAL FACILITIES ENGINEERING COMMAND
PUBLIC WORKS DEPARTMENT - MAINE

NAVAL FACILITIES ENGINEERING COMMAND ~ MID-ATLANTIC
NAVAL SHIPYARD - PORTSMOUTH, NH

PORTSMOUTH NAVAL SHIPYARD
DRY DOCK #1 DEFUELING COMPLEX
M-140 COMPLEX

KITTERY, ME

WALL PANEL ATTACHMENT AND FRAMING DETAILS

EPROJECT NO.: 1363311

CONSTR. CONTR. NO. N40085-17-C-5002

NAVFAC DRAWING NO. 12734852

SHEET 69 OF 188

S-509 DD1-16-933

DRAWFORM REVISION: 10 OCTOBER 2014

10/28/2016 6:40:29 AM X:\297 PORTSMOUTH NAVAL SHIPYARD\297.005.001 - DD#1 DEFUELING COMPLEX DESIGN\DRAWINGS\M140\SHEETS\S-509.DWG

NOTES

1. SEE SHEET S-001 FOR GENERAL NOTES.

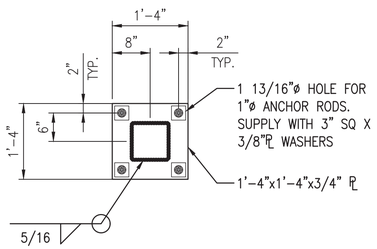

BASEPLATE DETAIL BP-12 (C1)
SCALE: 3/4" = 1'-0"

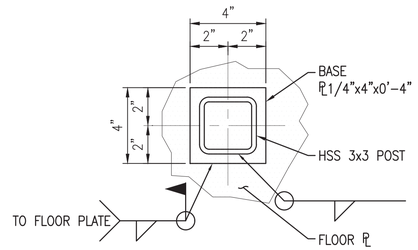

BASE PLATE DETAIL BP-15 (C2)
SCALE: 3"=1'-0"
S-517

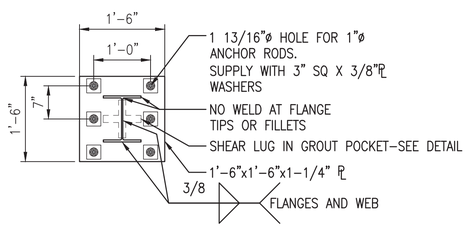

BASEPLATE DETAIL BP-11 (B1)
SCALE: 3/4" = 1'-0"

NOTE: BP-11(-SL) REPRESENTS THE SAME BASEPLATE CONFIGURATION WITHOUT SHEAR LUGS

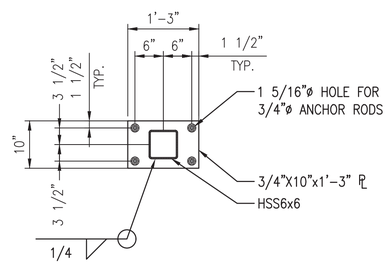

BASEPLATE DETAIL BP-14 (B2)
SCALE: 3/4" = 1'-0"

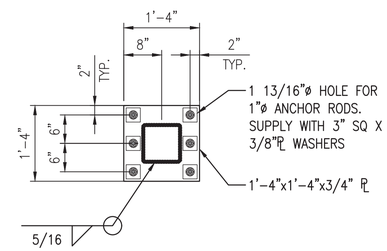

BASEPLATE DETAIL BP-16 (B3)
SCALE: 3/4" = 1'-0"

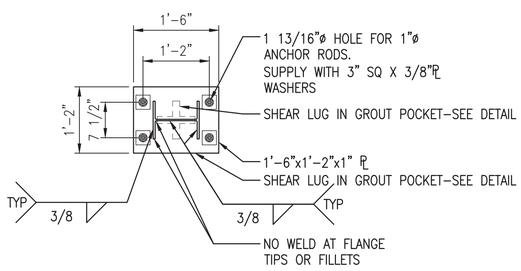

BASEPLATE DETAIL BP-10 (A1)
SCALE: 3/4" = 1'-0"

NOTE: BP-10(-SL) REPRESENTS THE SAME BASEPLATE CONFIGURATION WITHOUT SHEAR LUGS

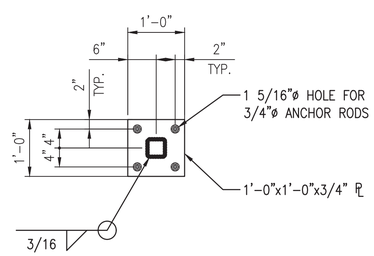

BASEPLATE DETAIL BP-13 (A2)
SCALE: 3/4" = 1'-0"

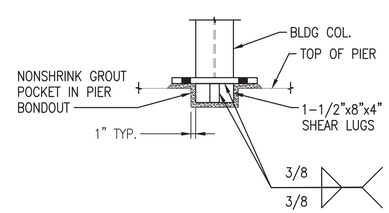

SHEAR LUG DETAIL (A3)
SCALE: 3/4" = 1'-0"

0 3" 6" 9"
Scale: 3" = 1'-0"
0 1' 2' 3'
Scale: 3/4" = 1'-0"

SYM	DESCRIPTION	DATE	APPR
0	ISSUED FOR CONSTRUCTION	10/28/2016	CBC

NAVFAC

STATE OF MAINE — SAMUEL J. THOMAS — LICENSED PROFESSIONAL ENGINEER — 10/28/16

Colby Company engineering

APPROVED: David W. Grunfeld
FOR COMMANDER NAVFAC
ACTIVITY: TIM FISHER, C. 2370.6 BRANCH HEAD
SATISFACTORY TO DATE 10/28/2016
DES SJT | DRW BCH | CHK CBC
PMDM: PETER STOCKLESS
BRANCH MANAGER: IAN BODWELL
FEADPM&E: AMIN BAHROUR
FIRE PROTECTION: PATRICK BAKAJ

DEPARTMENT OF THE NAVY
NAVAL FACILITIES ENGINEERING COMMAND ~ MID-ATLANTIC
PUBLIC WORKS DEPARTMENT - MAINE
NAVAL FACILITIES ENGINEERING COMMAND
NAVAL SHIPYARD - PORTSMOUTH, NH
PORTSMOUTH NAVAL SHIPYARD
KITTERY, ME
DRY DOCK #1 DEFUELING COMPLEX
M-140 COMPLEX
PASSAGEWAY SUPPORT SECTIONS

EPROJECT NO.: 1363311
CONSTR. CONTR. NO. N40085-17-C-5002
NAVFAC DRAWING NO. 12734853
SHEET 70 OF 188
S-510 | DD1-16-934

DRAWFORM REVISION: 10 OCTOBER 2014

10/28/2016 6:40:34 AM X:\297 PORTSMOUTH NAVAL SHIPYARD\297.005.001 - DD#1 DEFUELING COMPLEX DESIGN\DRAWINGS\M140\SHEETS\S-510.DWG

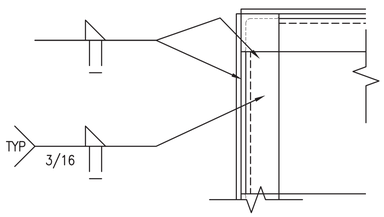

TOOL COLUMN PEDESTAL DETAIL (D1)

SCALE: 3"=1'-0" S-511

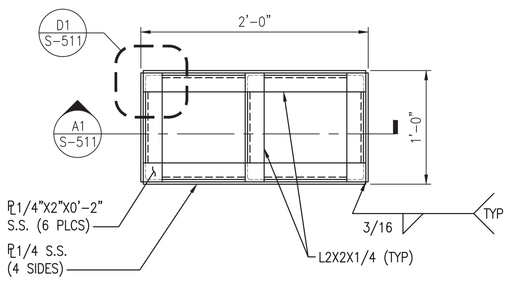

TOOL COLUMN PEDESTAL (C1)

SCALE: 1 1/2"=1'-0"

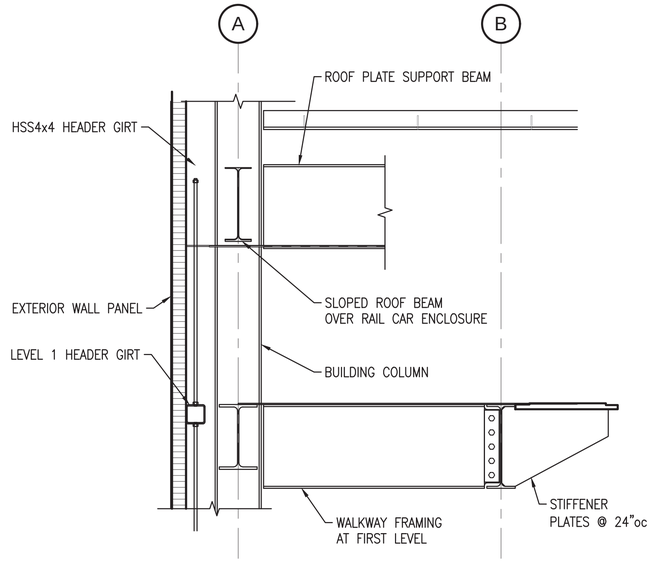

SECTION AT RAIL CAR ENCLOSURE CONNECTION (C3)

SCALE: 3/4"=1'-0" S-401

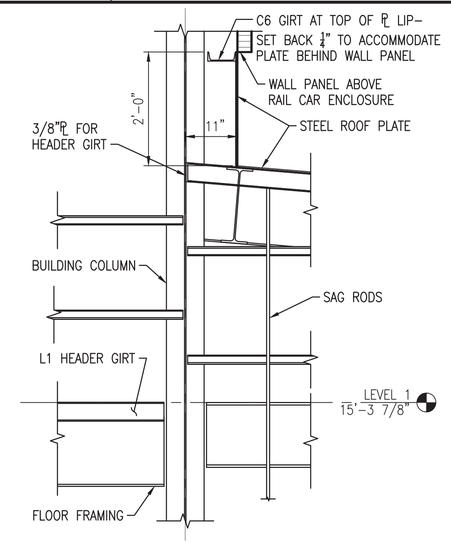

SECTION AT RAIL CAR ENCLOSURE CONNECTION (C4)

SCALE: 3/4"=1'-0" S-100, S-401

NOTES

1. SEE SHEET S-001 FOR GENERAL NOTES.

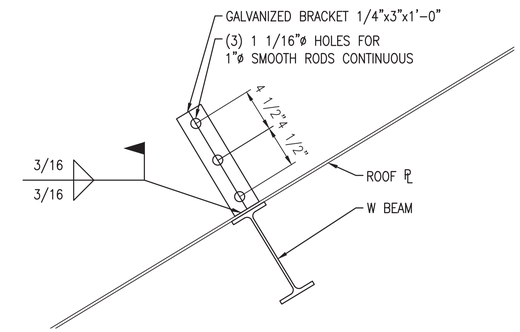

SNOW GUARD BRACKET DETAIL (8 REQ'D) (D5)

SCALE: 1 1/2"=1'-0" S-518

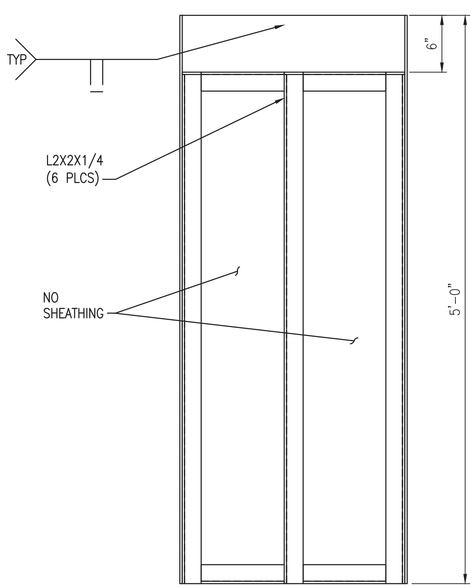

SECTION THROUGH TOOL COLUMN PEDESTAL (A1)

SCALE: 1 1/2"=1'-0" S-511

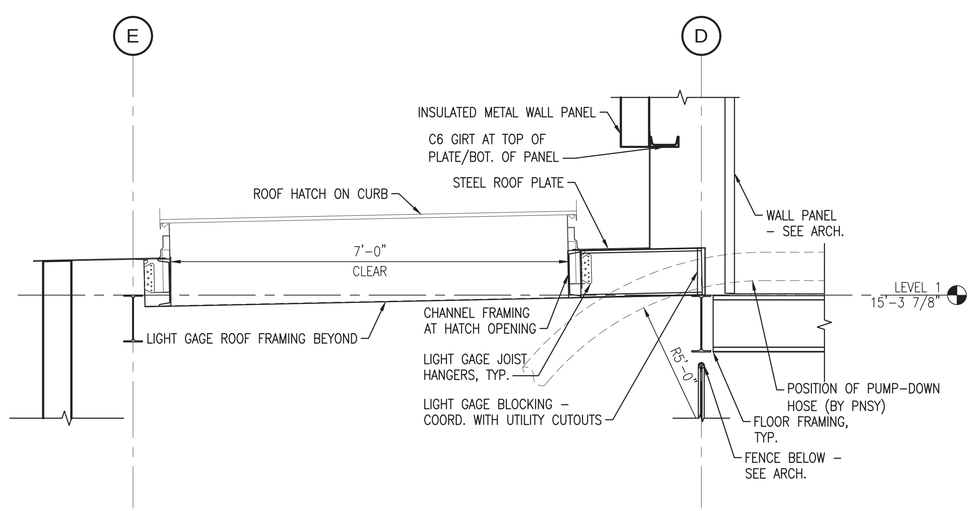

SECTION THROUGH LOW ROOF (A2)

SCALE: 3/4"=1'-0" S-101, S101A

Scale: 3" = 1'-0"

Scale: 1 1/2" = 1'-0"

Scale: 3/4" = 1'-0"

SYM	DESCRIPTION	DATE	APPR
0	ISSUED FOR CONSTRUCTION	10/28/2016	CBC

NAVFAC

STATE OF MAINE
SAMUEL J. THOMAS
No. 14159
LICENSED PROFESSIONAL ENGINEER
10/28/16
SEAL

Colby Company engineering
A/E INFO

APPROVED
David W. Grunfeld
FOR COMMANDER NAVFAC

ACTIVITY
TIM FISHER
C. 2370.6 BRANCH HEAD

SATISFACTORY TO DATE 10/28/2016

DES	SJT	DRW	BCH	CHK	CBC

PMDM PETER STOCKLESS
BRANCH MANAGER IAN BODWELL
FEA/DPM&E AMIN BAHROUR
FIRE PROTECTION PATRICK BAKAJ

DEPARTMENT OF THE NAVY
NAVAL FACILITIES ENGINEERING COMMAND
PUBLIC WORKS DEPARTMENT MAINE
NAVAL FACILITIES ENGINEERING COMMAND ~ MID-ATLANTIC
NAVAL SHIPYARD, PORTSMOUTH, NH
PORTSMOUTH NAVAL SHIPYARD
KITTERY, ME
DRY DOCK #1 DEFUELING COMPLEX
M-140 COMPLEX
EXTERIOR STAIR SECTIONS

EPROJECT NO.: 1363311
CONSTR. CONTR. NO. N40085-17-C-5002
NAVFAC DRAWING NO. 12734854
SHEET 71 OF 188
S-511 DD1-16-935

DRAWFORM REVISION: 10 OCTOBER 2014

10/28/2016 6:40:41 AM X:\297 PORTSMOUTH NAVAL SHIPYARD\297.005.001 - DD#1 DEFUELING COMPLEX DESIGN\DRAWINGS\M140\SHEETS\S-511.DWG

NOTES

1. SEE S-001 FOR GENERAL NOTES.
2. STUDS AND HOLES IN FLANGES SHALL BE FIELD LOCATED AND INSTALLED. CONTRACTOR TO COORDINATE LOCATIONS OF HOLES/STUDS BETWEEN DUCTWORK AND STEEL PLATE.

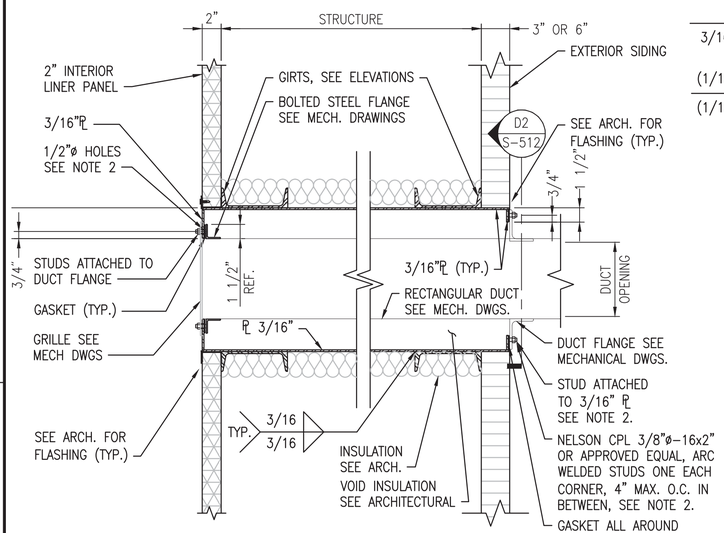

SECTION AT NON-ENGINEERED DUCT PENETRATION (D1)

SCALE: 1 1/2"=1'-0" S-201, S-405

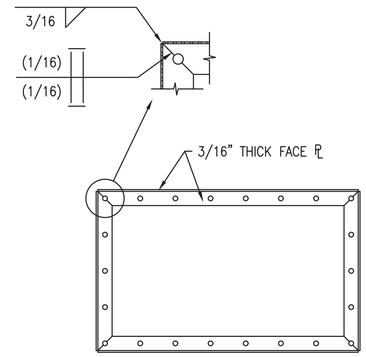

DUCT DETAIL (D2)

SCALE: 1 1/2"=1'-0" S-405, S-512

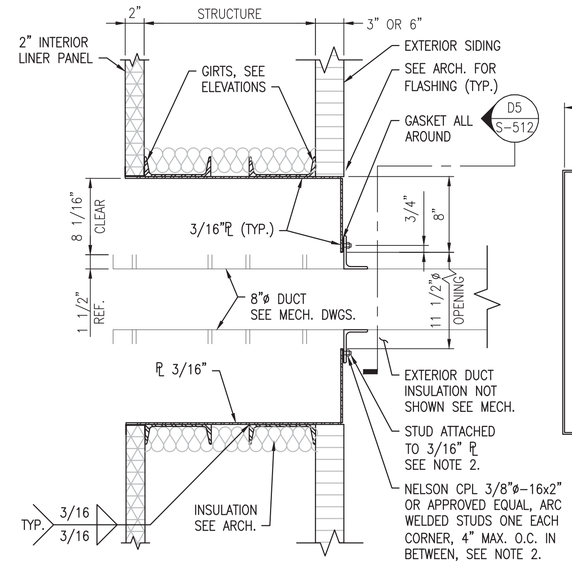

SECTION AT ENGINEERED DUCT PENETRATION (D3)

SCALE: 1 1/2"=1'-0" S-201, S-405

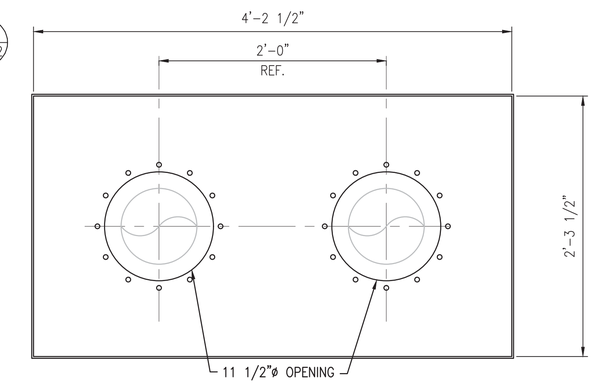

SECTION AT OPENING (D5)

SCALE: 1 1/2"=1'-0" S-405, S-512

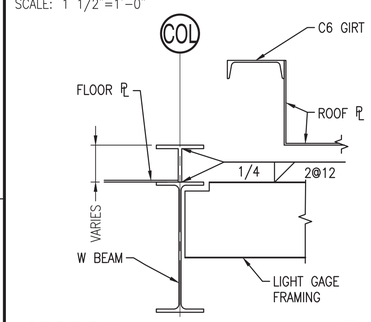

SECTION (B1)

SCALE: 1-1/2" = 1'-0" S-512

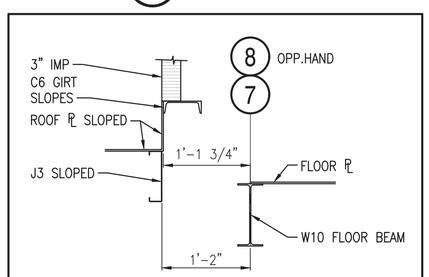

SECTION AT DEMINERALIZER ROOF STORAGE ENCLOSURE WALL (B2)

SCALE: 1"=1'-0" S-101A, S-102A

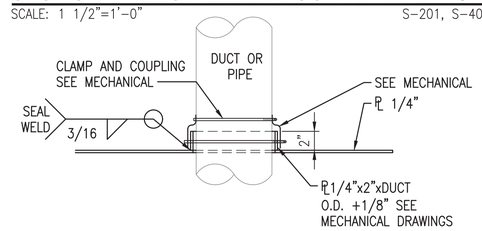

SECTION AT DUCT FLOOR PENETRATION (B3)

SCALE: 1 1/2"=1'-0" S-102A

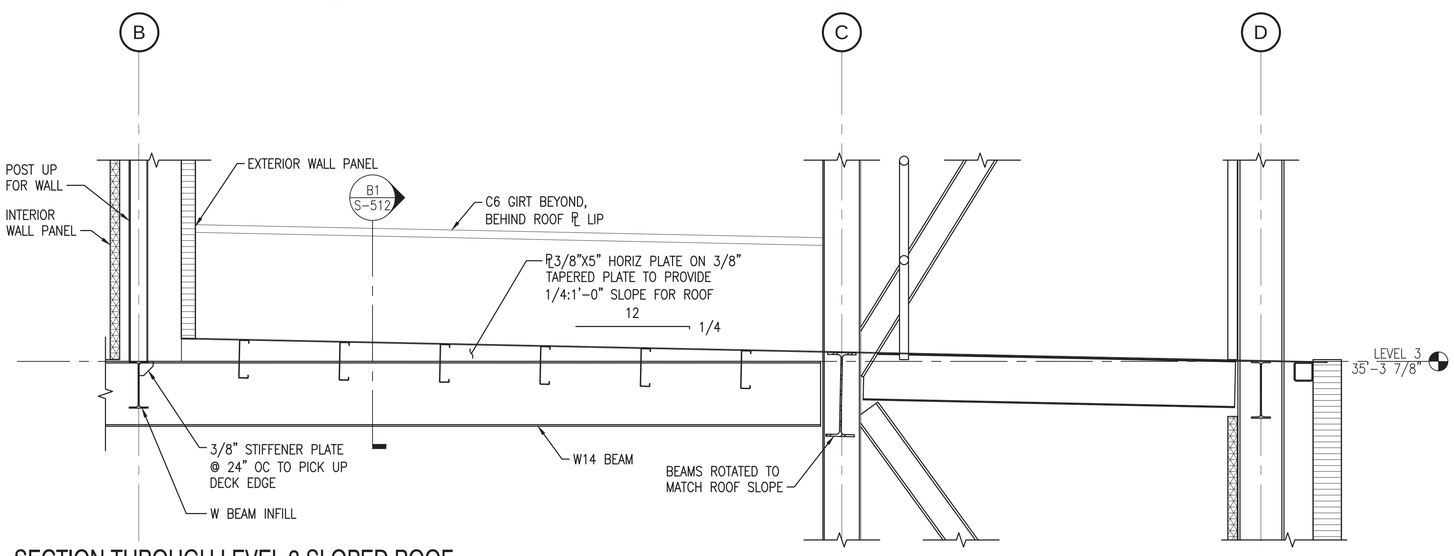

SECTION THROUGH LEVEL 3 SLOPED ROOF (A1)

SCALE: 3/4" = 1'-0" S-103

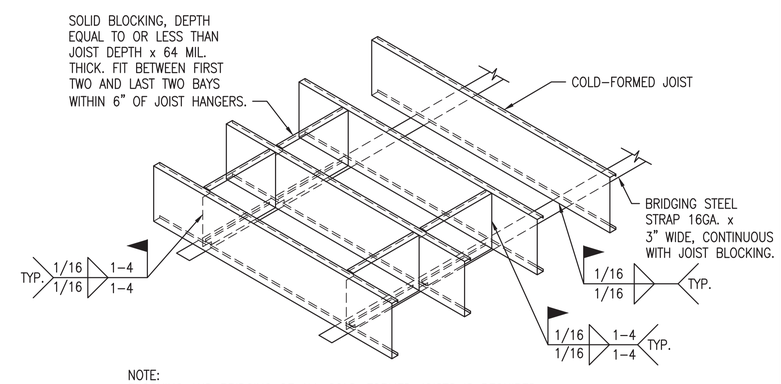

NOTE:
BLOCKING AND BRIDGING OF ALL COLD-FORMED JOISTS IS REQUIRED. SETS OF JOISTS THAT ARE PARALLEL AND START AND STOP IN-LINE WITH EACH OTHER MAY BE BLOCKED AND BRIDGED TOGETHER.

TYPICAL COLD-FORMED JOIST BLOCKING AND BRIDGING (A4)

SCALE: 3/4"=1'-0"

Scale: 1 1/2" = 1'-0" Scale: 1" = 1'-0" Scale: 3/4" = 1'-0"

SYM	DESCRIPTION	DATE	APPR
0	ISSUED FOR CONSTRUCTION	10/28/2016	CBC

NAVFAC

STATE OF MAINE SAMUEL J. THOMAS No. 13311 LICENSED PROFESSIONAL ENGINEER 10/28/16 SEAL

Colby Company engineering A/E INFO

APPROVED David W. Grunfeld FOR COMMANDER NAVFAC

ACTIVITY: TIM FISHER C. 2370.6 BRANCH HEAD

SATISFACTORY TO DATE 10/28/2016

DES SJT DRW BCH CHK CBC

PMDM PETER STOCKLESS

BRANCH MANAGER IAN BODWELL

FEA/PM&E AMIN BAHROUR

FIRE PROTECTION PATRICK BAKAJ

DEPARTMENT OF THE NAVY
NAVAL FACILITIES ENGINEERING COMMAND
PUBLIC WORKS DEPARTMENT - MAINE

NAVAL FACILITIES ENGINEERING COMMAND ~ MID-ATLANTIC
NAVAL SHIPYARD - PORTSMOUTH, NH

PORTSMOUTH NAVAL SHIPYARD
KITTERY, ME

DRY DOCK #1 DEFUELING COMPLEX
M-140 COMPLEX

STRUCTURAL FRAMING DETAILS

EPROJECT NO.: 1363311

CONSTR. CONTR. NO. N40085-17-C-5002

NAVFAC DRAWING NO. 12734855

SHEET 72 OF 188

S-512 DD1-16-936

DRAWFORM REVISION: 10 OCTOBER 2014

10/28/2016 6:41:01 AM X:\297 PORTSMOUTH NAVAL SHIPYARD\297.005.001 - DD#1 DEFUELING COMPLEX DESIGN\DRAWINGS\M140\SHEETS\S-512.DWG

NOTES

1. SEE SHEET S-001 FOR GENERAL NOTES.

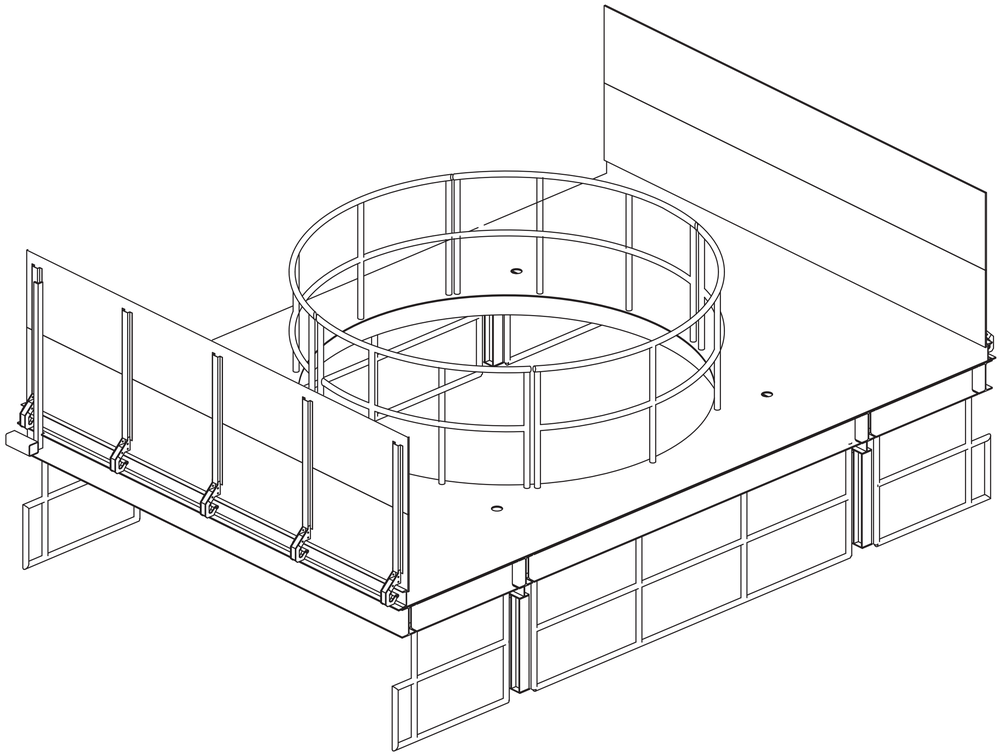

DECK INSERT ISOMETRIC VIEW

SCALE: N.T.S.

B1

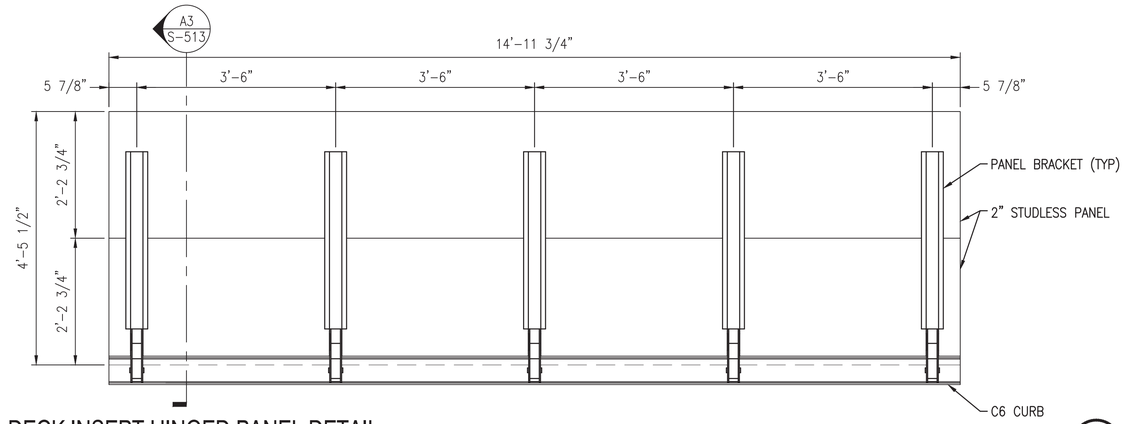

DECK INSERT HINGED PANEL DETAIL

SCALE: 3/4"=1'-0"

C3

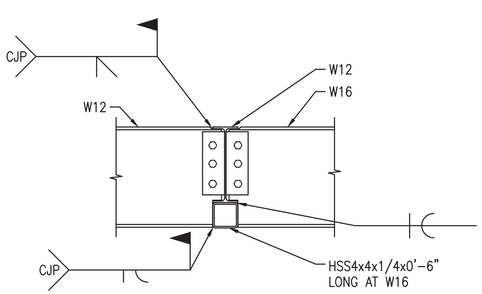

SECTION AT TOOL COLUMN FRAMING

SCALE: 1"=1'-0"

S-401

A1

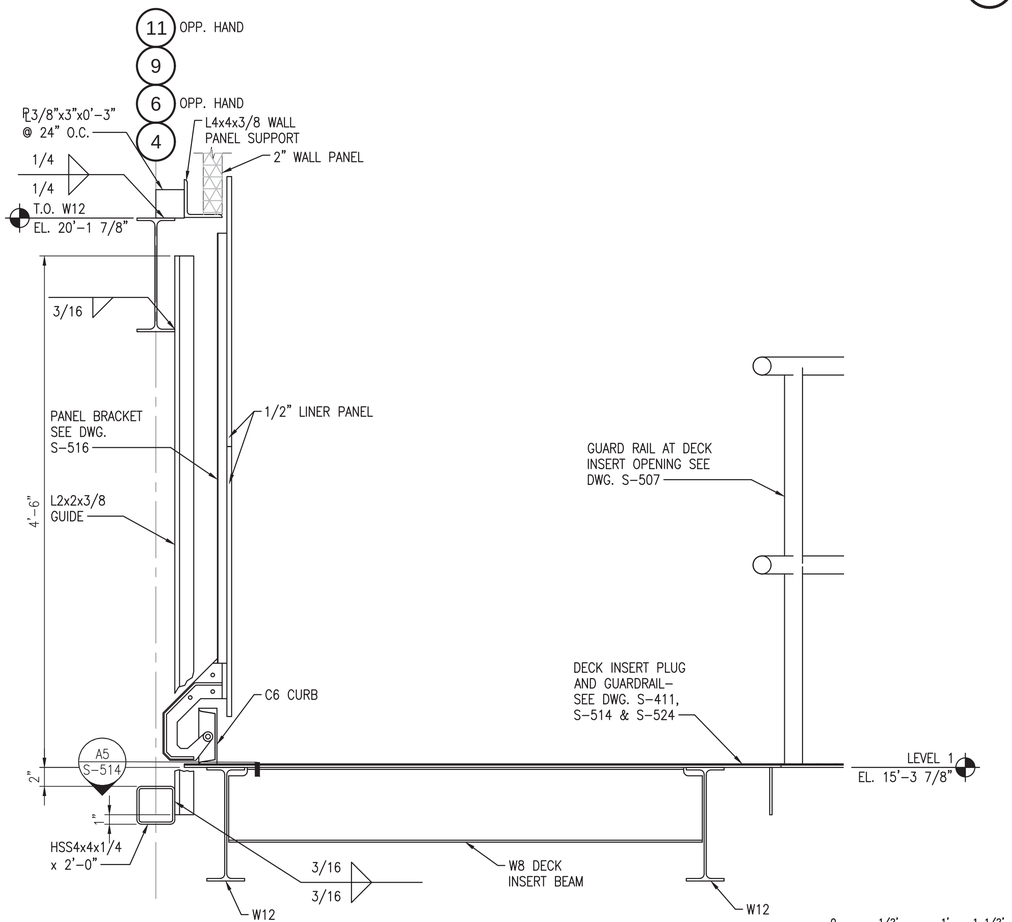

DECK INSERT SECTION

SCALE: 1-1/2" = 1'-0"

S-401, S-513, S-514

A3

Scale: 1 1/2" = 1'-0"
Scale: 1" = 1'-0"
Scale: 3/4" = 1'-0"

SYM	DESCRIPTION	DATE	APPR
0	ISSUED FOR CONSTRUCTION	10/28/2016	CBC

NAVFAC

STATE OF MAINE
SAMUEL J. THOMAS
No. 14355
LICENSED PROFESSIONAL ENGINEER
10/28/16
SEAL

Colby Company engineering
A/E INFO

APPROVED
David W. Thurnfield
FOR COMMANDER NAVFAC

ACTIVITY
TIM FISHER
C. 2370.6 BRANCH HEAD

SATISFACTORY TO DATE 10/28/2016

DES SJT | DRW BCH | CHK CBC

PM/DM PETER STOCKLESS

BRANCH MANAGER IAN BODWELL

FEAD/PM&E AMIN BAHROUR

FIRE PROTECTION PATRICK BAKAJ

DEPARTMENT OF THE NAVY
NAVAL FACILITIES ENGINEERING COMMAND
PUBLIC WORKS DEPARTMENT - MAINE

NAVAL FACILITIES ENGINEERING COMMAND – MID-ATLANTIC
NAVAL SHIPYARD - PORTSMOUTH, NH

PORTSMOUTH NAVAL SHIPYARD
KITTERY, ME

DRY DOCK #1 DEFUELING COMPLEX
M-140 COMPLEX

DECK INSERT DETAILS

EPROJECT NO.: 1363311

CONSTR. CONTR. NO. N40085-17-C-5002

NAVFAC DRAWING NO. 12734856

SHEET 73 OF 188

S-513 | DD1-16-937

DRAWFORM REVISION: 10 OCTOBER 2014

10/28/2016 6:41:07 AM X:\297 PORTSMOUTH NAVAL SHIPYARD\297.005.001 - DDH1 DEFUELING COMPLEX DESIGN\DRAWINGS\M140\SHEETS\S-513.DWG

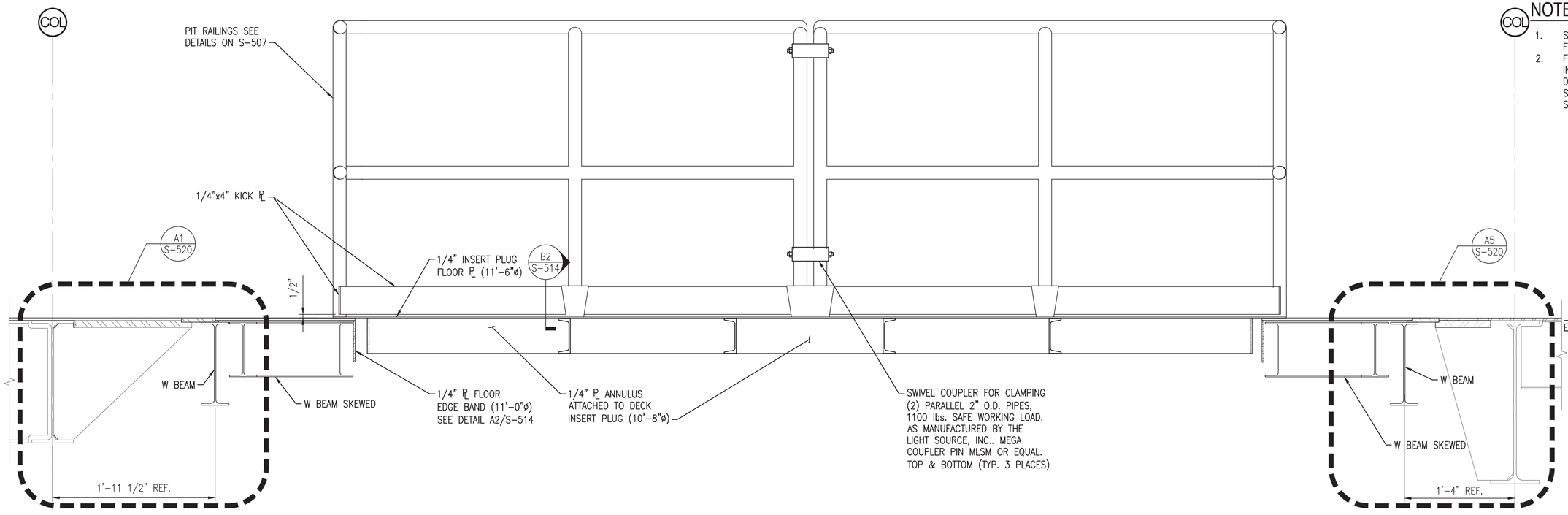

NOTES

1. SEE SHEET S-001 FOR GENERAL NOTES.
2. FOR ADDITIONAL INFORMATION SEE DECK INSERT SHEETS S-513, S-515, S-516

DECK INSERT SECTION

SCALE: 1-1/2" = 1'-0" S-401 C1

(2 REQUIRED)

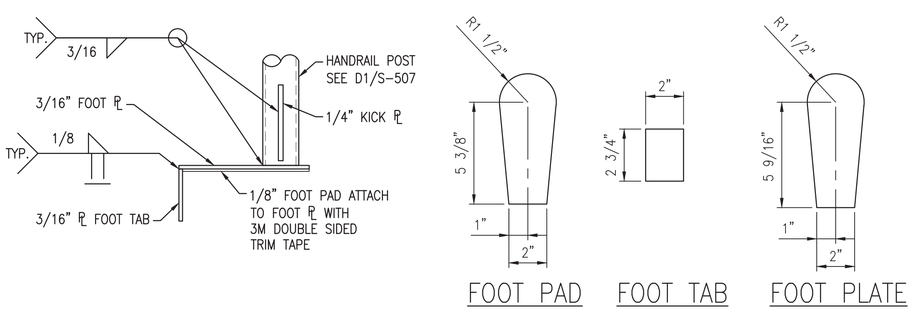

HAND RAIL BASE DETAIL

SCALE: 3" = 1'-0" S-514 B2

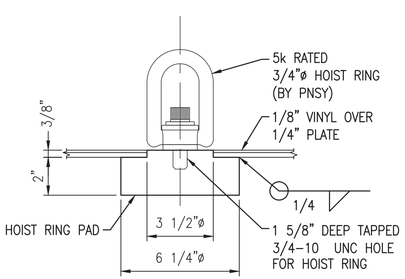

HOIST RING PAD DETAIL

SCALE: 3" = 1'-0" S-401, S-411 A1

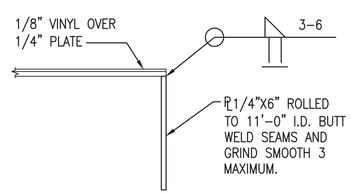

TYPICAL DECK INSERT OPENING EDGE BANDING DETAIL

SCALE: 3" = 1'-0" A-401, S-514 A2

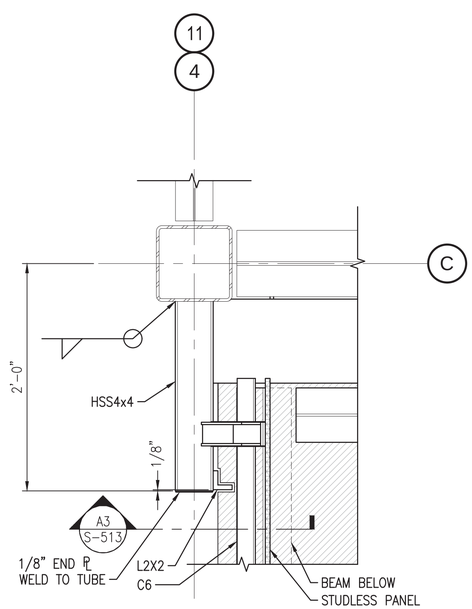

DECK INSERT GUIDE PLAN

SCALE: 1-1/2" = 1'-0" S-401 A3

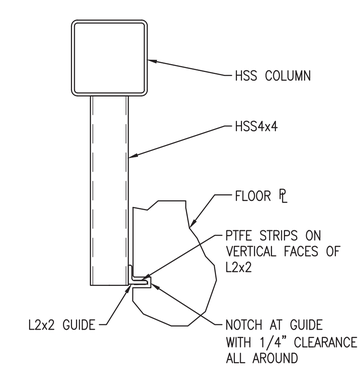

DECK INSERT GUIDE DETAIL

SCALE: 1-1/2" = 1'-0" S-513 A5

Scale: 1 1/2" = 1'-0"

Scale: 3" = 1'-0"

SYM	DESCRIPTION	DATE	APPR
0	ISSUED FOR CONSTRUCTION	10/28/2016	CBC

NAVFAC

STATE OF MAINE — SAMUEL J. THOMAS — LICENSED PROFESSIONAL ENGINEER — 10/28/16 — SEAL

Colby Company engineering

A/E INFO

APPROVED: David W. Thurnfeld

FOR COMMANDER NAVFAC

ACTIVITY: TIM FISHER, C. 2370.6 BRANCH HEAD

SATISFACTORY TO DATE 10/28/2016

DES SJT | DRW BCH | CHK CBC

PMDM: PETER STOCKLESS

BRANCH MANAGER: IAN BODWELL

FEAD/PM&E: AMIN BAHROUR

FIRE PROTECTION: PATRICK BAKAJ

DEPARTMENT OF THE NAVY — NAVAL FACILITIES ENGINEERING COMMAND — PUBLIC WORKS DEPARTMENT - MAINE

NAVAL FACILITIES ENGINEERING COMMAND ~ MID-ATLANTIC — NAVAL SHIPYARD - PORTSMOUTH, NH

PORTSMOUTH NAVAL SHIPYARD — KITTERY, ME

DRY DOCK #1 DEFUELING COMPLEX
M-140 COMPLEX

DECK INSERT DETAILS

EPROJECT NO.: 1363311

CONSTR. CONTR. NO.: N40085-17-C-5002

NAVFAC DRAWING NO.: 12734857

SHEET 74 OF 188

S-514 | DD1-16-938

DRAWFORM REVISION: 10 OCTOBER 2014

10/28/2016 6:41:11 AM X:\297 PORTSMOUTH NAVAL SHIPYARD\297.005.001 - DDH1 DEFUELING COMPLEX DESIGN\DRAWINGS\M140\SHEETS\S-514.DWG

NOTES

1. SEE SHEET S-001 FOR GENERAL NOTES.
2. FOR ADDITIONAL DECK INSERT DETAILS SEE DRAWINGS S-513, S-514, & S-516.

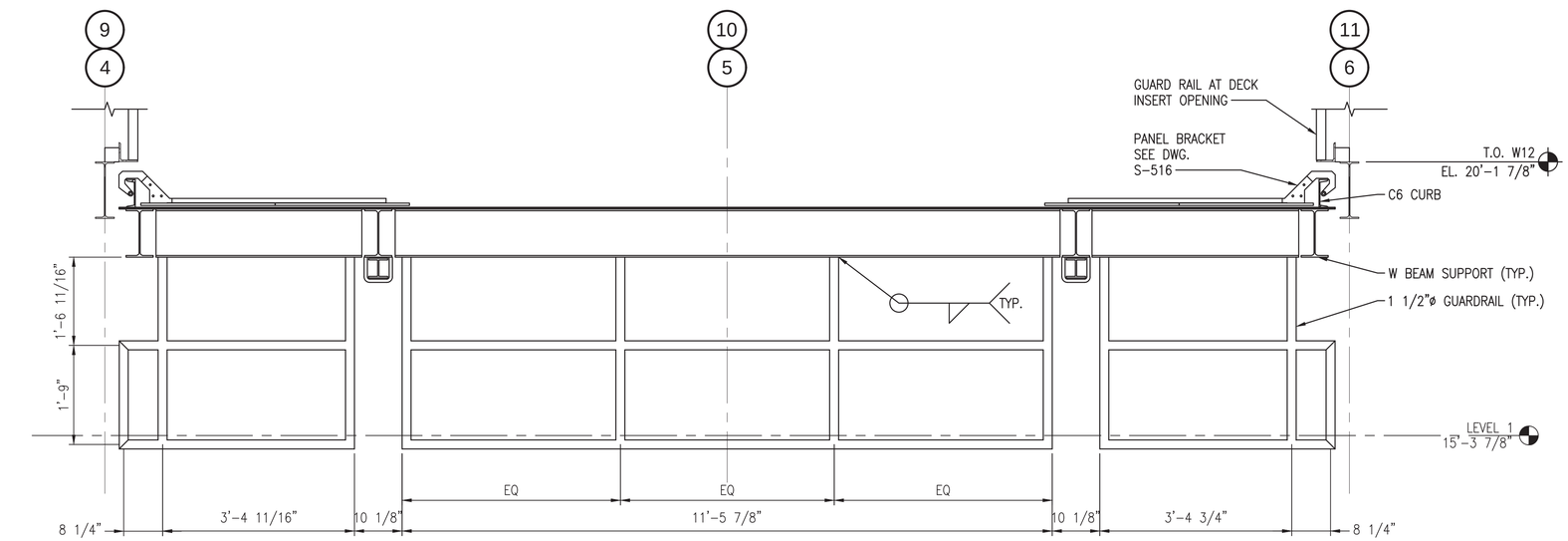

DECK INSERT SECTION IN UP POSITION

SCALE: 3/4" = 1'-0"

S-401 C1

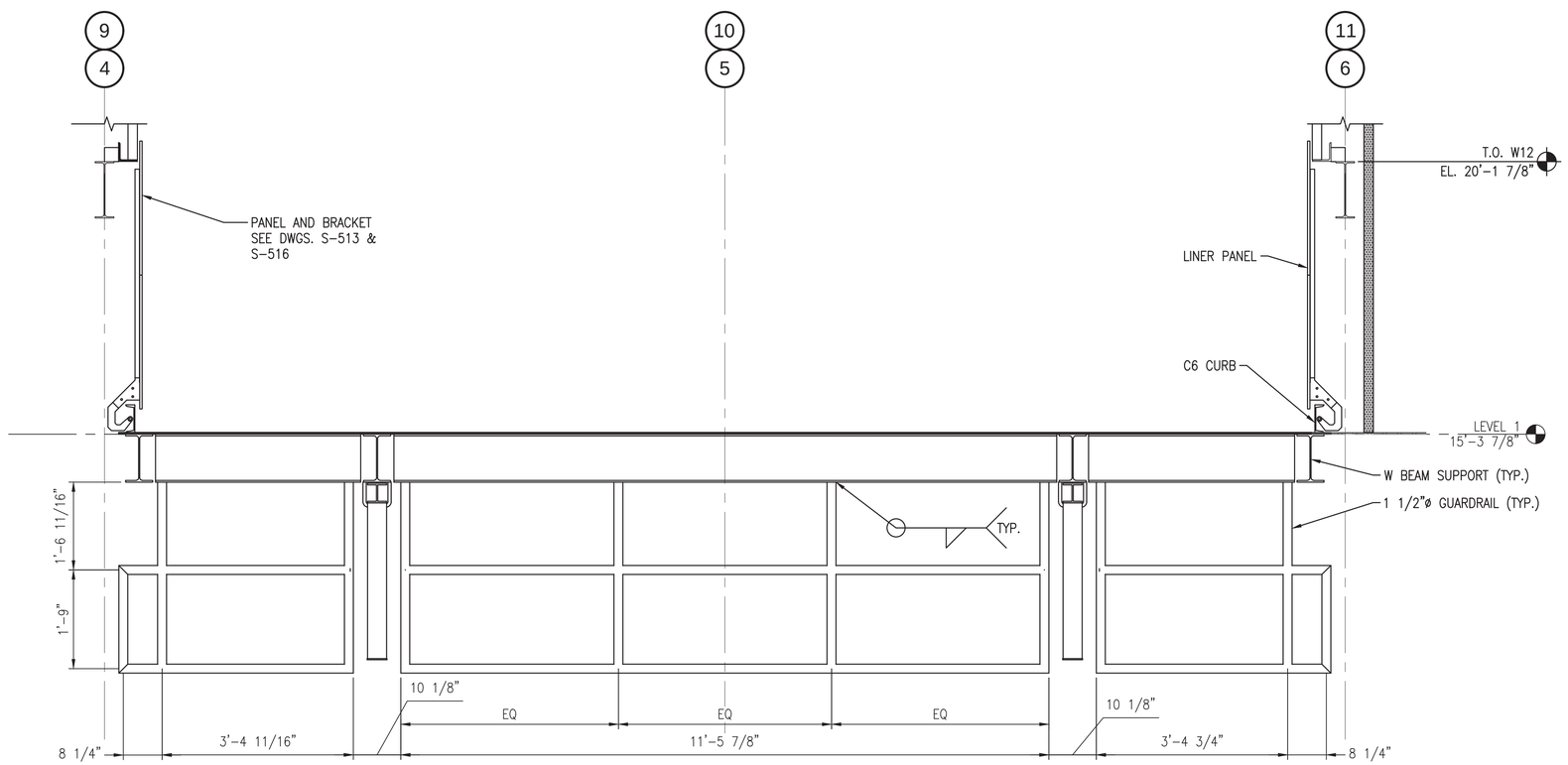

DECK INSERT SECTION IN DOWN POSITION

SCALE: 3/4" = 1'-0"

S-401 A1

0 1' 2' 3'
Scale: 3/4" = 1'-0"

SYM	DESCRIPTION	DATE	APPR
0	ISSUED FOR CONSTRUCTION	10/28/2016	CBC

NAVFAC

STATE OF MAINE
SAMUEL J. THOMAS
No. 14455
LICENSED PROFESSIONAL ENGINEER
10/28/16
SEAL

Colby Company engineering
A/E INFO

APPROVED
David W. Thurnfield
FOR COMMANDER NAVFAC

ACTIVITY
TIM FISHER
C. 2370.6 BRANCH HEAD

SATISFACTORY TO DATE 10/28/2016

DES	SJT	DRW	BCH	CHK	CBC

PM/DM PETER STOCKLESS
BRANCH MANAGER IAN BODWELL
FEA/DPM&E AMIN BAHROUR
FIRE PROTECTION PATRICK BAKAJ

DEPARTMENT OF THE NAVY
NAVAL FACILITIES ENGINEERING COMMAND
PUBLIC WORKS DEPARTMENT - MAINE
NAVAL FACILITIES ENGINEERING COMMAND ~ MID-ATLANTIC
NAVAL SHIPYARD - PORTSMOUTH NH
PORTSMOUTH NAVAL SHIPYARD
KITTERY, ME
DRY DOCK #1 DEFUELING COMPLEX
M-140 COMPLEX
DECK INSERT DETAILS

EPROJECT NO.: 1363311
CONSTR. CONTR. NO. N40085-17-C-5002
NAVFAC DRAWING NO. 12734858
SHEET 75 OF 188

S-515 DD1-16-939

DRAWFORM REVISION: 10 OCTOBER 2014

10/28/2016 6:41:15 AM X:\297 PORTSMOUTH NAVAL SHIPYARD\297.005.001 - DD#1 DEFUELING COMPLEX DESIGN\DRAWINGS\M140\SHEETS\S-515.DWG

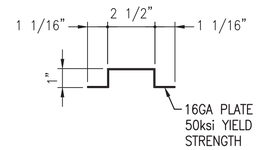

DECK INSERT PANEL BRACKET DETAILS (D3)

SCALE: 3" = 1'-0" S-516

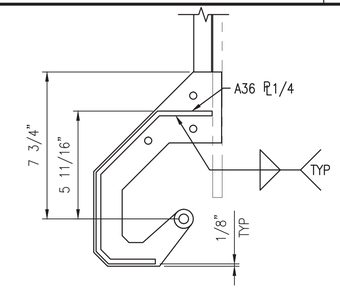

DECK INSERT PANEL SUPPORT DETAILS (D4)

SCALE: 3" = 1'-0" S-516

NOTES

1. SEE SHEET S-001 FOR GENERAL NOTES.

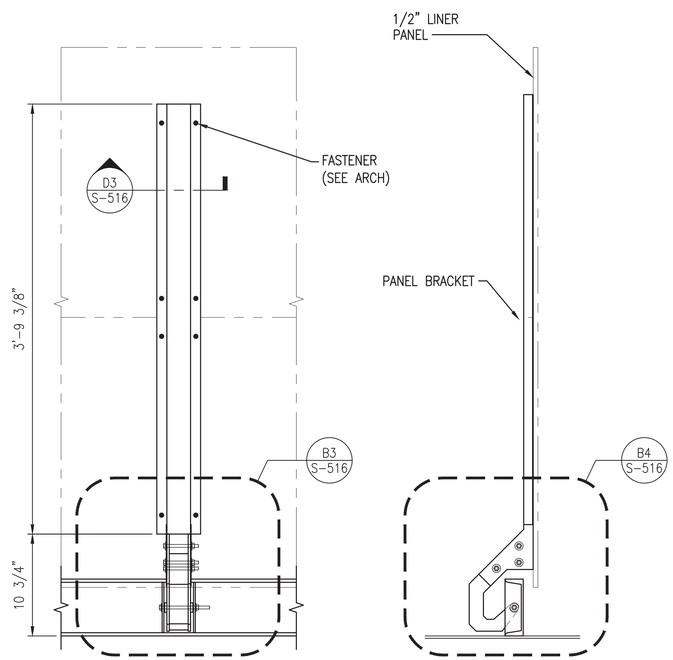

DECK INSERT PANEL BRACKET DETAILS (B1)

SCALE: 1-1/2" = 1'-0" S-513

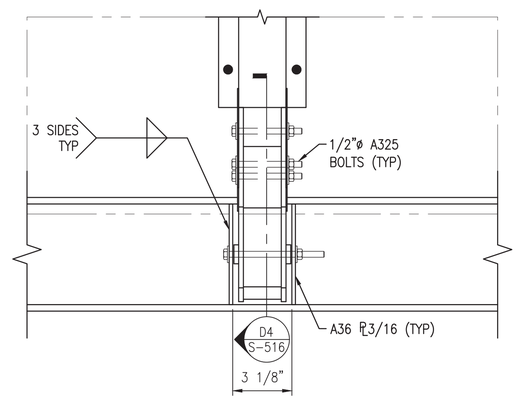

DECK INSERT PANEL SUPPORT DETAILS (B3)

SCALE: 3" = 1'-0" S-516

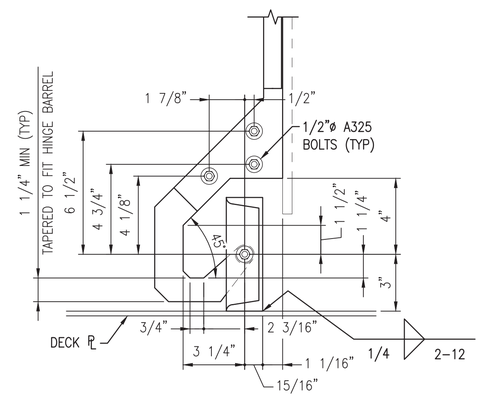

DECK INSERT PANEL SUPPORT DETAILS (B4)

SCALE: 3" = 1'-0" S-516

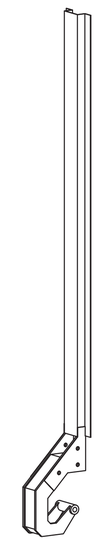

PANEL SUPPORT 3D ISOMETRIC VIEW (B5)

SCALE: N.T.S.

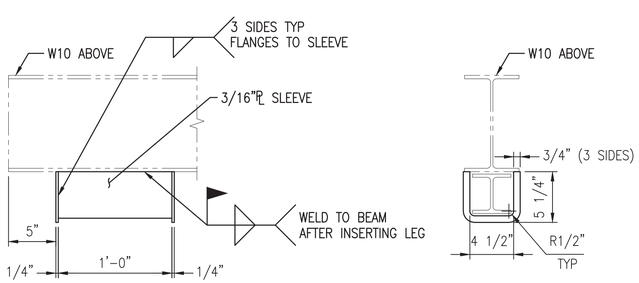

NOTE:
1. LEG NOT SHOWN FOR CLARITY
2. SLEEVE DESIGNED TO PERMIT FREE MOVEMENT OF LEG WITH SNUG FIT ALL AROUND

DECK INSERT SADDLE DETAILS (A1)

SCALE: 1-1/2" = 1'-0"

(8 REQUIRED)

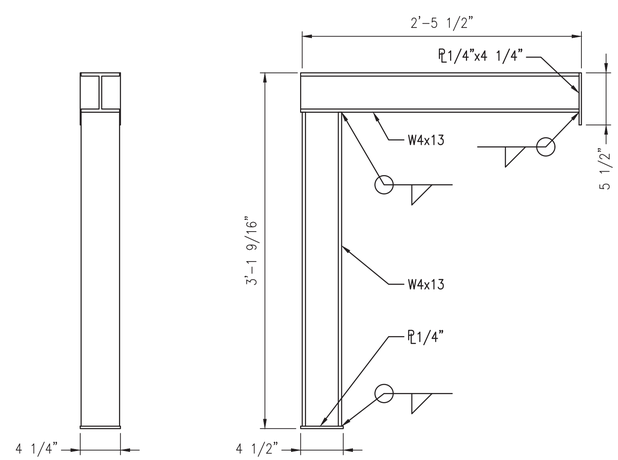

DECK INSERT NORTH LEG DETAILS (A3)

SCALE: 1-1/2" = 1'-0"

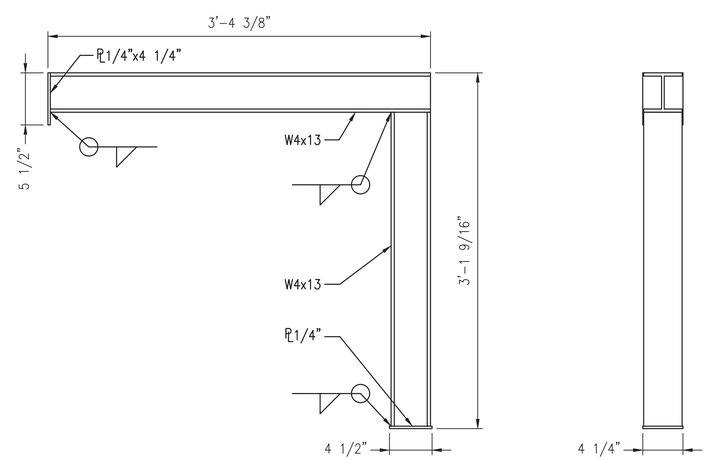

DECK INSERT SOUTH LEG DETAILS (A4)

SCALE: 1-1/2" = 1'-0"

0 3" 6" 9"
Scale: 3" = 1'-0"

0 1/2' 1' 1 1/2'
Scale: 1 1/2" = 1'-0"

SYM	DESCRIPTION	DATE	APPR
0	ISSUED FOR CONSTRUCTION	10/28/2016	CBC

NAVFAC

STATE OF MAINE
SAMUEL J. THOMAS
No. 7
LICENSED PROFESSIONAL ENGINEER
10/28/16
SEAL

Colby Company engineering
A/E INFO

APPROVED
David W. Thurnfield
FOR COMMANDER NAVFAC

ACTIVITY
TIM FISHER
C. 2370.6 BRANCH HEAD

SATISFACTORY TO DATE 10/28/2016
DES SJT DRW BCH CHK CBC
PMDM PETER STOCKLESS
BRANCH MANAGER IAN BODWELL
FEA/DPM&E AMIN BAHROUR
FIRE PROTECTION PATRICK BAKAJ

DEPARTMENT OF THE NAVY
NAVAL FACILITIES ENGINEERING COMMAND
PUBLIC WORKS DEPARTMENT - MAINE
NAVAL FACILITIES ENGINEERING COMMAND ~ MID-ATLANTIC
NAVAL SHIPYARD - PORTSMOUTH, NH
PORTSMOUTH NAVAL SHIPYARD
KITTERY, ME
DRY DOCK #1 DEFUELING COMPLEX
M-140 COMPLEX
DECK INSERT DETAILS

EPROJECT NO.: 1363311
CONSTR. CONTR. NO. N40085-17-C-5002
NAVFAC DRAWING NO. 12734859
SHEET 76 OF 188
S-516 DD1-16-940

DRAWFORM REVISION: 10 OCTOBER 2014

10/28/2016 6:41:22 AM X:\297 PORTSMOUTH NAVAL SHIPYARD\297.005.001 - DD#1 DEFUELING COMPLEX DESIGN\DRAWINGS\M140\SHEETS\S-516.DWG

NOTES

1. SEE S-001 FOR GENERAL NOTES.
2. GRATING TREADS SHALL BE 19-W-4 1 1/4"x1/8" GALVANIZED WITH NON SLIP NOSING. (TYP.)
3. ALL EXTERIOR STEEL SHALL BE GALVANIZED

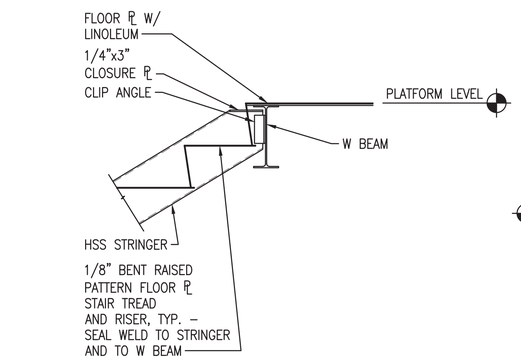

STAIR DETAIL - HSS STRINGER (D1)
SCALE: 1"=1'-0" S-402

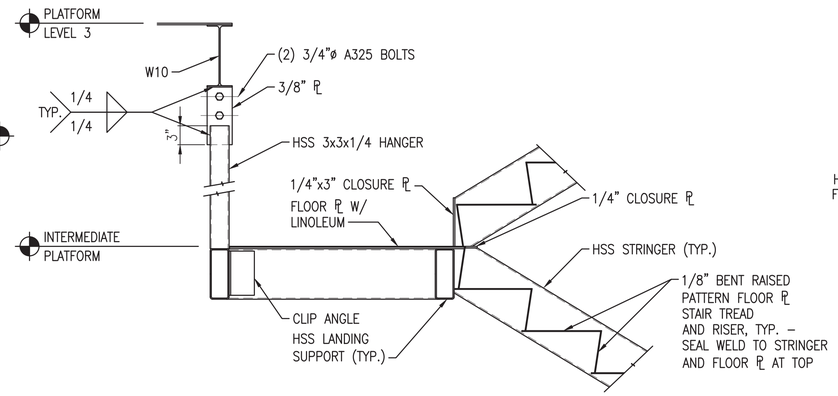

STAIR INTERMEDIATE DETAIL (D2)
SCALE: 1"=1'-0" S-402

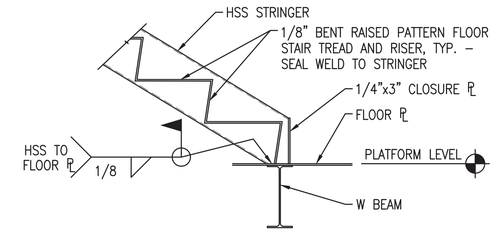

STAIR CONNECTION TO W BEAM DETAIL (D4)
SCALE: 1"=1'-0" S-402

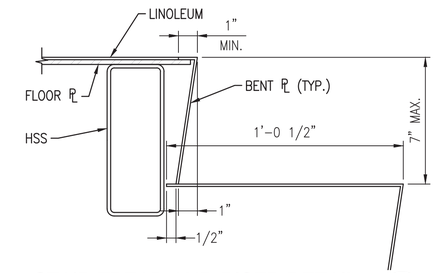

STAIR TREAD AND RISER DETAIL (D5)
SCALE: 3"=1'-0"

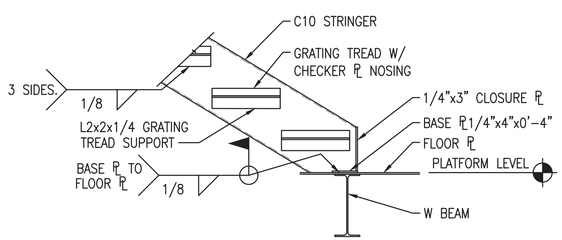

STAIR BASE DETAIL - CHANNEL STRINGER (B1)
SCALE: 1"=1'-0" S-402

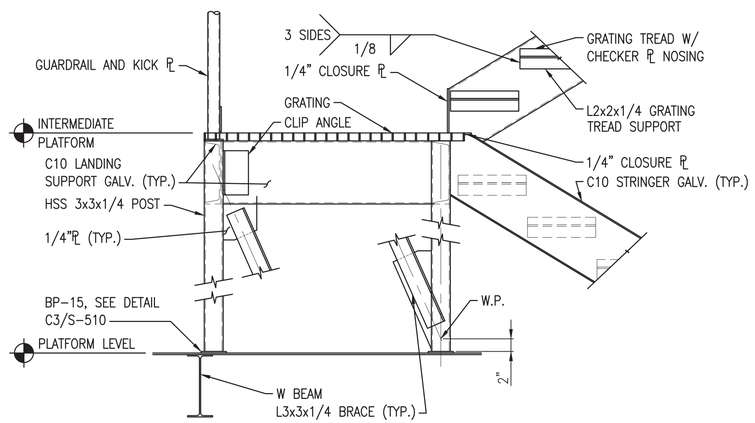

STAIR INTERMEDIATE PLATFORM DETAIL (B3)
SCALE: 1"=1'-0" S-402

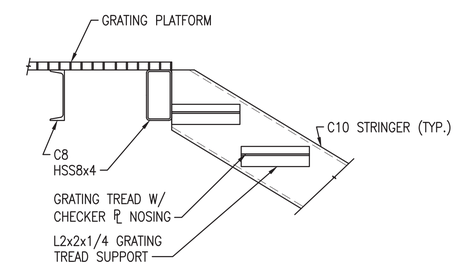

STAIR AT CRANE LEVEL PLATFORM DETAIL (B5)
SCALE: 1"=1'-0" S-402

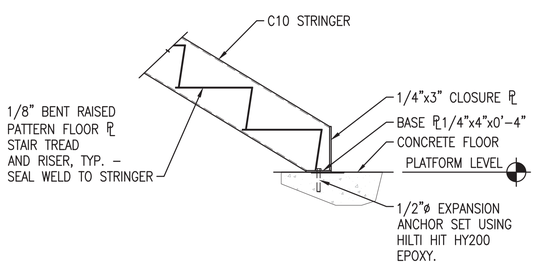

STAIR BASE DETAIL - CHANNEL STRINGER (A1)
SCALE: 1"=1'-0" S-402, S-403

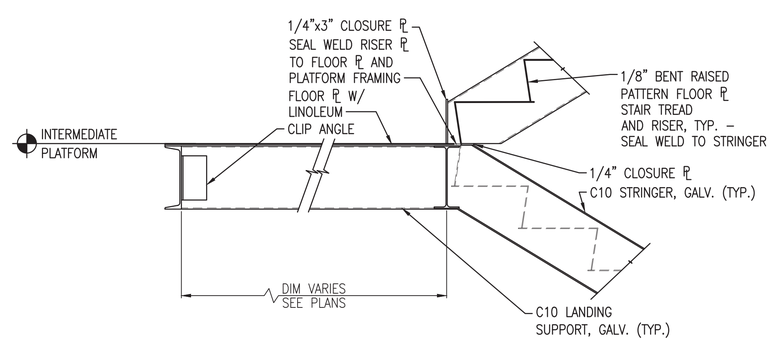

STAIR INTERMEDIATE PLATFORM DETAIL (A3)
SCALE: 1"=1'-0" S-402, S-403

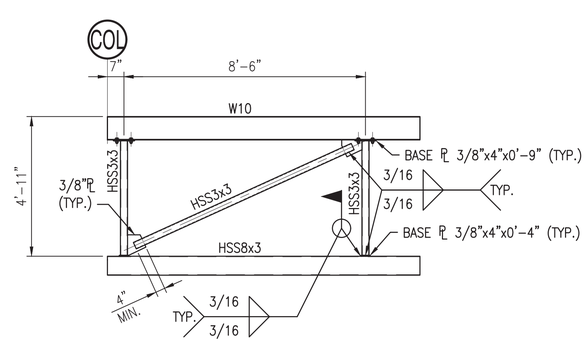

SECTION AT PLATFORM BRACING (A4)
SCALE: 3/8"=1'-0" (2 REQUIRED) S-402

Scale: 3" = 1'-0" (0, 3", 6", 9")
Scale: 1" = 1'-0" (0, 1/2', 1', 2')
Scale: 3/8" = 1'-0" (0, 2', 4', 6')

SYM	DESCRIPTION	DATE	APPR
0	ISSUED FOR CONSTRUCTION	10/28/2016	CBC

NAVFAC

STATE OF MAINE — SAMUEL J. THOMAS — LICENSED PROFESSIONAL ENGINEER — 10/28/16 — SEAL

Colby Company engineering — A/E INFO

APPROVED: David W. Thumfield
FOR COMMANDER NAVFAC

ACTIVITY: TIM FISHER, C. 2370.6 BRANCH HEAD
SATISFACTORY TO DATE 10/28/2016
DES SJT | DRW BCH | CHK CBC
PM/DM PETER STOCKLESS
BRANCH MANAGER IAN BODWELL
FEAD/PM&E AMIN BAHROUR
FIRE PROTECTION PATRICK BAKAJ

DEPARTMENT OF THE NAVY
NAVAL FACILITIES ENGINEERING COMMAND
PUBLIC WORKS DEPARTMENT - MAINE
NAVAL FACILITIES ENGINEERING COMMAND – MID-ATLANTIC
NAVAL SHIPYARD - PORTSMOUTH, NH
PORTSMOUTH NAVAL SHIPYARD
KITTERY, ME
DRY DOCK #1 DEFUELING COMPLEX
M-140 COMPLEX
STAIR SECTIONS AND DETAILS

EPROJECT NO.: 1363311
CONSTR. CONTR. NO. N40085-17-C-5002
NAVFAC DRAWING NO. 12734860
SHEET 77 OF 188
S-517 | DD1-16-941

DRAWFORM REVISION: 10 OCTOBER 2014

10/28/2016 6:41:26 AM X:\297 PORTSMOUTH NAVAL SHIPYARD\297.005.001 - DD#1 DEFUELING COMPLEX DESIGN\DRAWINGS\M140\SHEETS\S-517.DWG

NOTES

1. SEE S-001 FOR GENERAL NOTES.

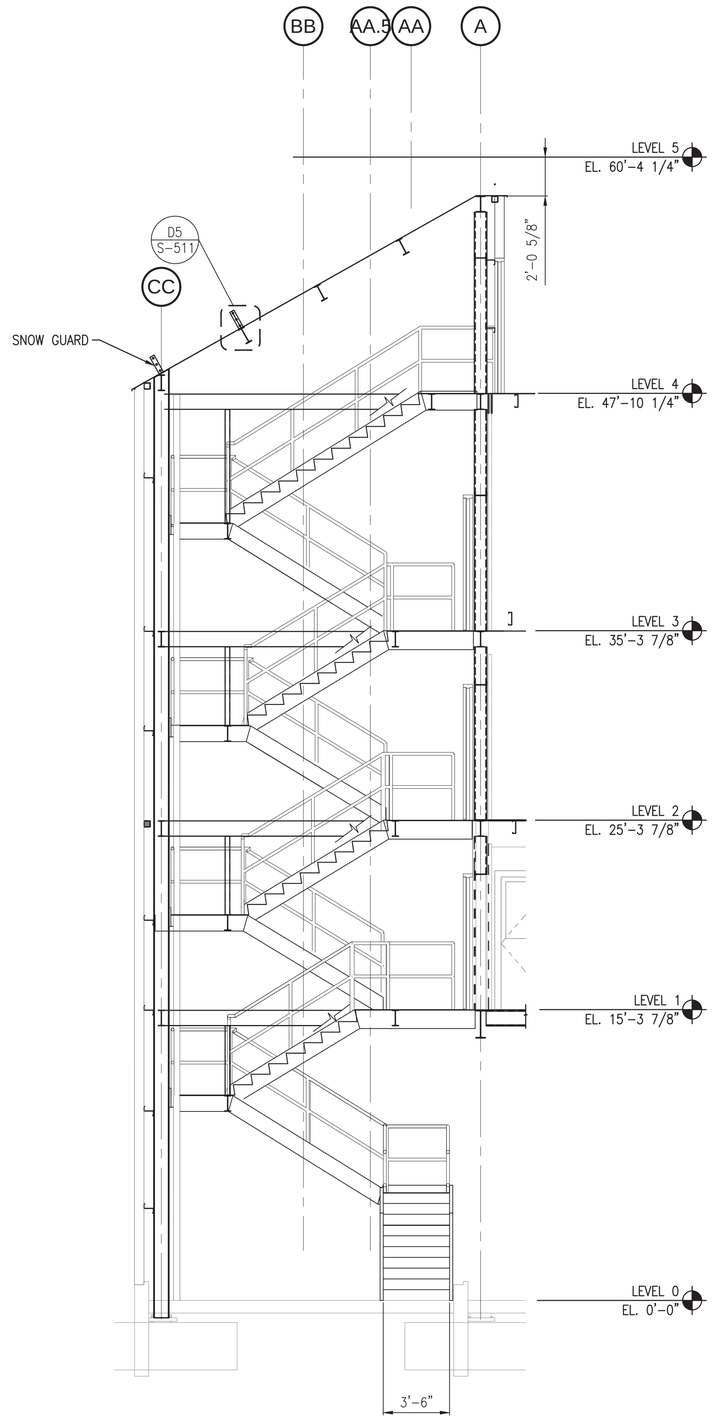

ENTRYWAY STAIR TOWER (A2)
SCALE: 1/4"=1'-0" S-103, S-104, S-105

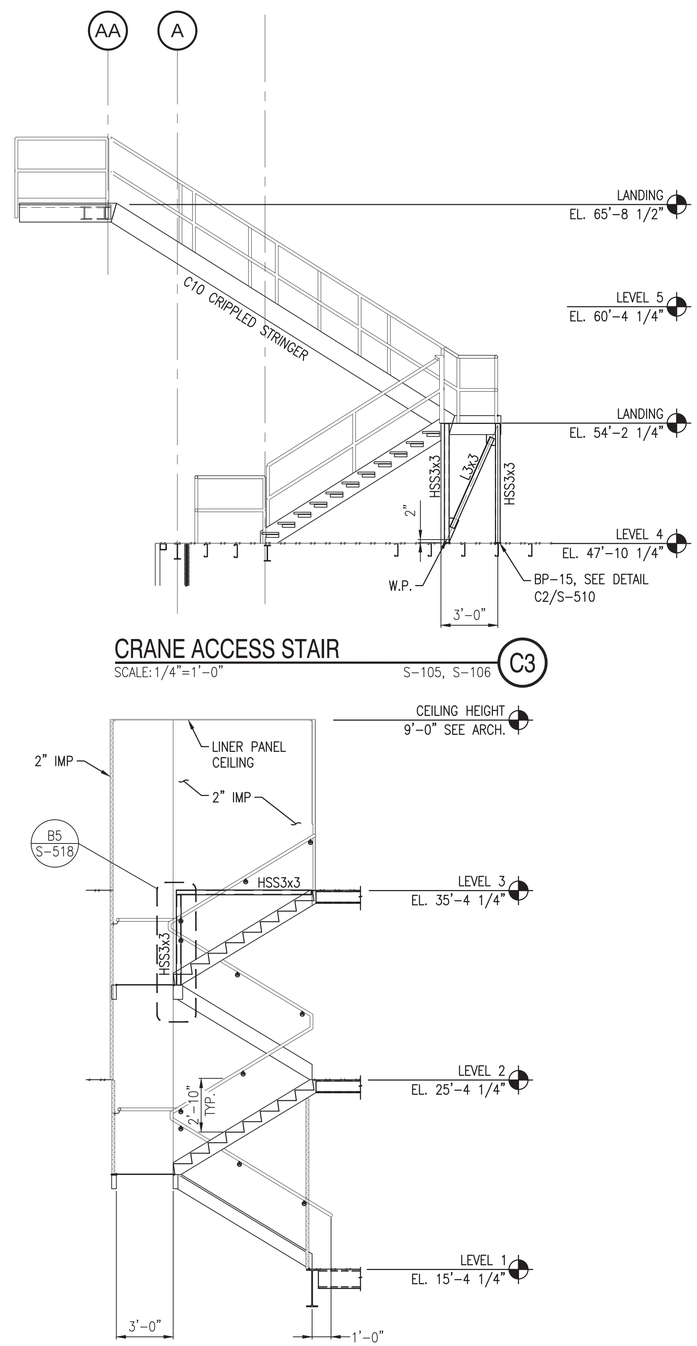

CRANE ACCESS STAIR (C3)
SCALE: 1/4"=1'-0" S-105, S-106

M140 ENCLOSURE STAIR TOWER (A3)
SCALE: 1/4"=1'-0" S-101, S-101A, S-102, S-102A, S-103

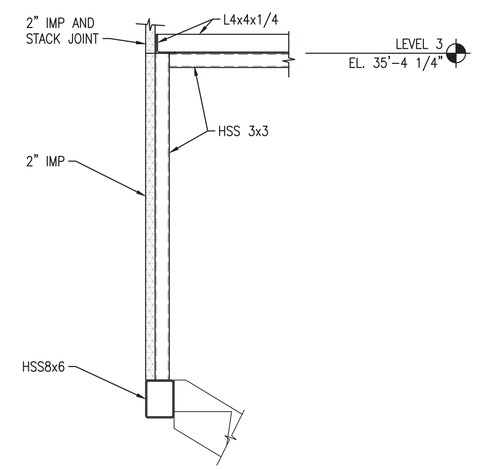

DETAIL OF STUDLESS PANEL SUPPORT (B5)
SCALE: 3/4"=1'-0" S-518

0 1' 2' 3'
Scale: 3/4" = 1'-0"

0 2' 4' 8'
Scale: 1/4" = 1'-0"

SYM	DESCRIPTION	DATE	APPR
0	ISSUED FOR CONSTRUCTION	10/28/2016	CBC

NAVFAC

STATE OF MAINE
SAMUEL J. THOMAS
No. 14455
LICENSED PROFESSIONAL ENGINEER
10/28/16
SEAL

Colby Company engineering
A/E INFO

APPROVED
David W. Trumfield
FOR COMMANDER NAVFAC

ACTIVITY
TIM FISHER
C. 2370.6 BRANCH HEAD

SATISFACTORY TO DATE 10/28/2016

DES SJT DRW BCH CHK CBC

PMDM PETER STOCKLESS
BRANCH MANAGER IAN BODWELL
FEADPM&E AMIN BAHROUR
FIRE PROTECTION PATRICK BAKAJ

DEPARTMENT OF THE NAVY
NAVAL FACILITIES ENGINEERING COMMAND ~ MID-ATLANTIC
PUBLIC WORKS DEPARTMENT, MAINE
NAVAL FACILITIES ENGINEERING COMMAND
NAVAL SHIPYARD, PORTSMOUTH, NH
PORTSMOUTH NAVAL SHIPYARD
KITTERY, ME
DRY DOCK #1 DEFUELING COMPLEX
M-140 COMPLEX
STAIR TOWER SECTIONS

EPROJECT NO.: 1363311
CONSTR. CONTR. NO. N40085-17-C-5002
NAVFAC DRAWING NO. 12734861
SHEET 78 OF 188

S-518 DD1-16-942

DRAWFORM REVISION: 10 OCTOBER 2014

10/28/2016 6:41:31 AM X:\297 PORTSMOUTH NAVAL SHIPYARD\297.005.001 - D#1 DEFUELING COMPLEX DESIGN\DRAWINGS\M140\SHEETS\S-518.DWG

NOTES

1. SEE SHEET S-001 FOR GENERAL NOTES.

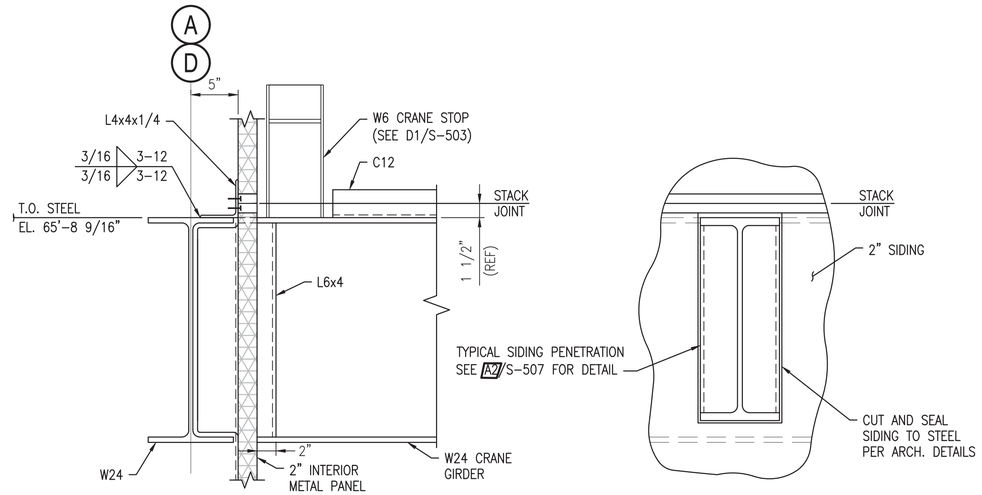

METAL PANEL STACK JOINT DETAIL @ CRANE GIRDER

SCALE: 1 1/2"=1'-0" S-106 C3

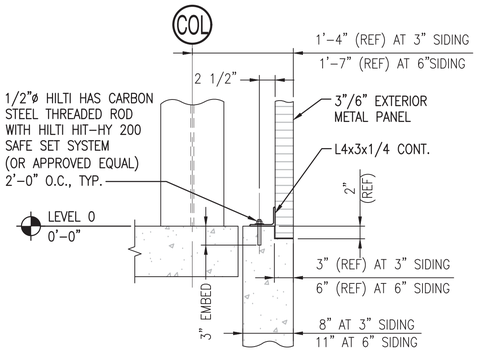

TYP. METAL PANEL BASE ATTACHMENT DETAIL

SCALE: 1"=1'-0" D5

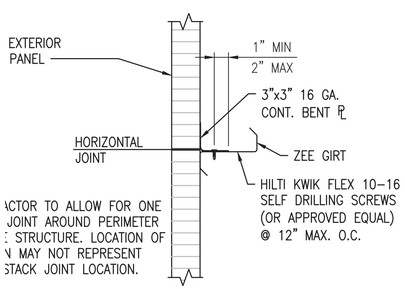

TYP. EXTERIOR METAL PANEL STACK JOINT

SCALE: 1 1/2"=1'-0" S-202 B1

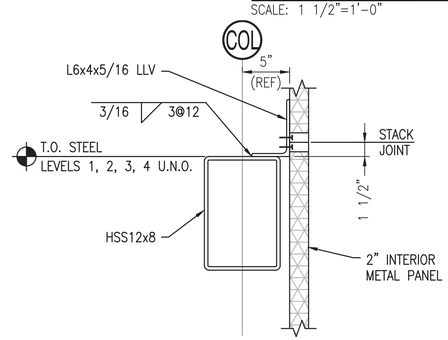

TYP. INTERIOR METAL PANEL STACK JOINT

SCALE: 1 1/2"=1'-0" B2

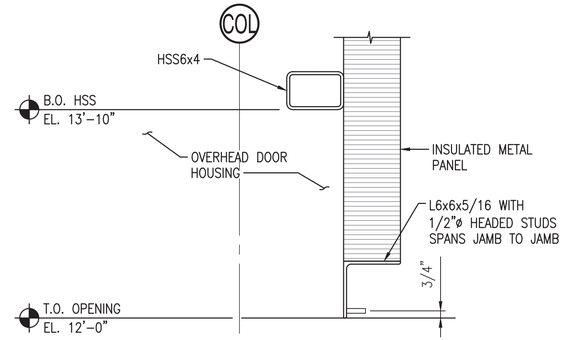

TYP. HEAD AT OVERHEAD DOOR (W/ STUDS)

SCALE: 1 1/2"=1'-0" S-203A B3

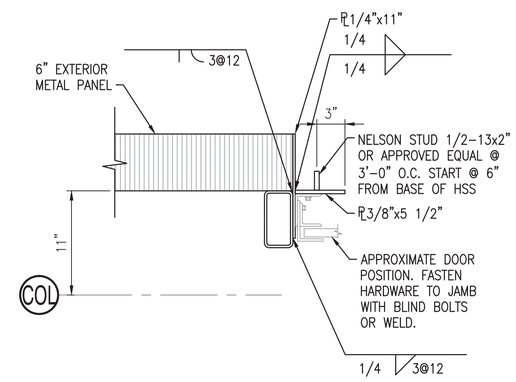

TYP. JAMB AT OVERHEAD DOOR (W/ STUDS)

SCALE: 1 1/2"=1'-0" S-101 B5

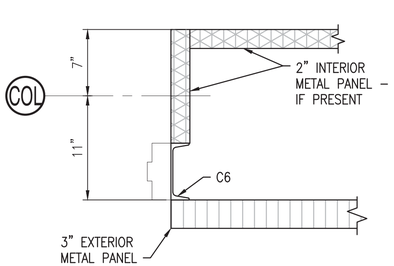

TYP. DETAIL AT MANDOOR

SCALE: 1 1/2"=1'-0" A1

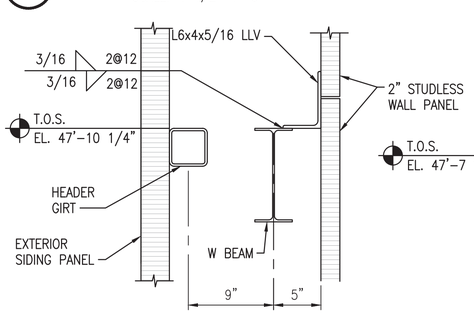

SECTION AT STACK JOINT

SCALE: 1 1/2"=1'-0" S-104 A2

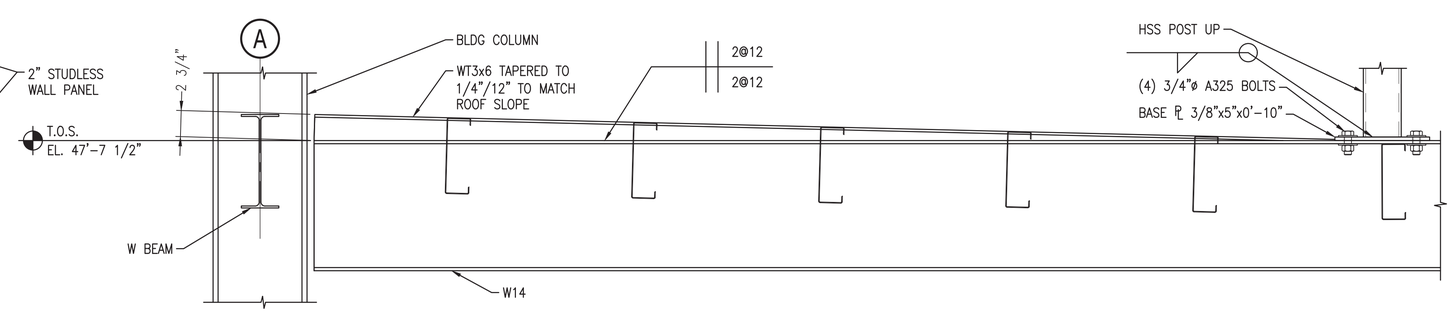

SECTION AT SLOPED ROOF

SCALE: 1 1/2"=1'-0" S-104 A4

0 1/2' 1' 1 1/2' Scale: 1 1/2" = 1'-0"

0 1/2' 1' 2' Scale: 1" = 1'-0"

SYM	DESCRIPTION	DATE	APPR
0	ISSUED FOR CONSTRUCTION	10/28/2016	CBC

NAVFAC

STATE OF MAINE SAMUEL J. THOMAS No. 13855 LICENSED PROFESSIONAL ENGINEER 10/28/16 SEAL

Colby Company engineering A/E INFO

APPROVED David W. Trumfield FOR COMMANDER NAVFAC

ACTIVITY TIM FISHER C. 2370.6 BRANCH HEAD

SATISFACTORY TO DATE 10/28/2016

DES SJT DRW BCH CHK CBC

PMDM PETER STOCKLESS

BRANCH MANAGER IAN BODWELL

FEADPM&E AMIN BAHROUR

FIRE PROTECTION PATRICK BAKAJ

DEPARTMENT OF THE NAVY
NAVAL FACILITIES ENGINEERING COMMAND
PUBLIC WORKS DEPARTMENT, MAINE

NAVAL FACILITIES ENGINEERING COMMAND ~ MID-ATLANTIC
NAVAL SHIPYARD, PORTSMOUTH, NH

PORTSMOUTH NAVAL SHIPYARD
KITTERY, ME

DRY DOCK #1 DEFUELING COMPLEX
M-140 COMPLEX

PANEL ATTACHMENTS

EPROJECT NO.: 1363311

CONSTR. CONTR. NO. N40085-17-C-5002

NAVFAC DRAWING NO. 12734862

SHEET 79 OF 188

S-519 DD1-16-943

DRAWFORM REVISION: 10 OCTOBER 2014

10/28/2016 6:41:55 AM X:\297 PORTSMOUTH NAVAL SHIPYARD\297.005.001 - DD#1 DEFUELING COMPLEX DESIGN\DRAWINGS\M140\SHEETS\S-519.DWG

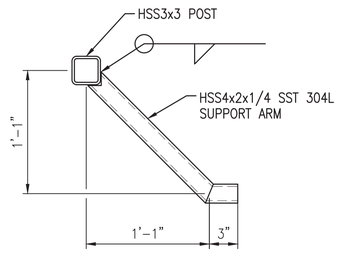

SECTION AT SUPPORT ARM (D1)

SCALE: 1 1/2"=1'-0" S-404

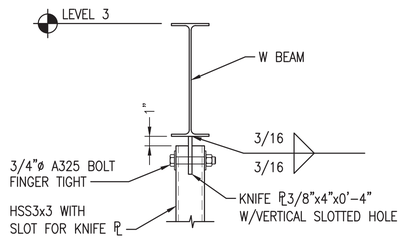

SECTION AT KNIFE PLATE (D2)

SCALE: 1 1/2"=1'-0" S-404

NOTES

1. SEE SHEET S-001 FOR GENERAL NOTES.

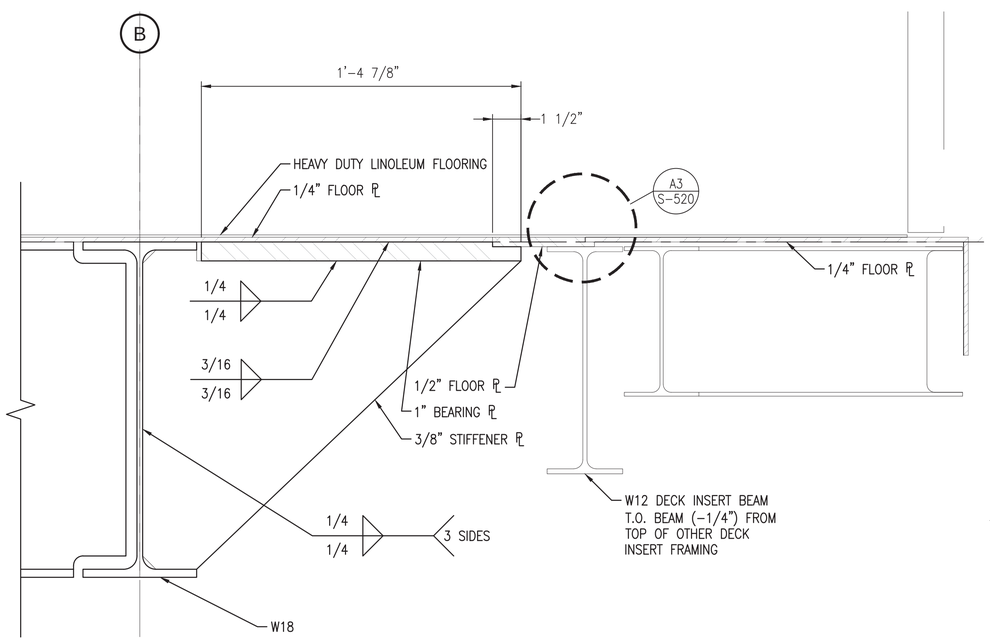

SECTION AT DECK INSERT (A1)

SCALE: 3"=1'-0" S-514

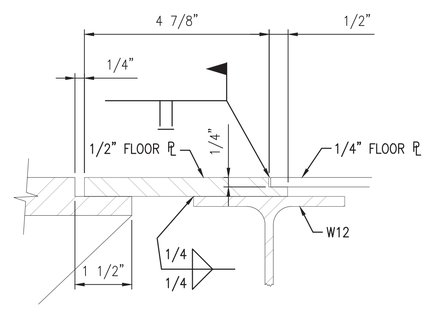

DETAIL AT DECK INSERT (A3)

SCALE: 6"=1'-0" S-520

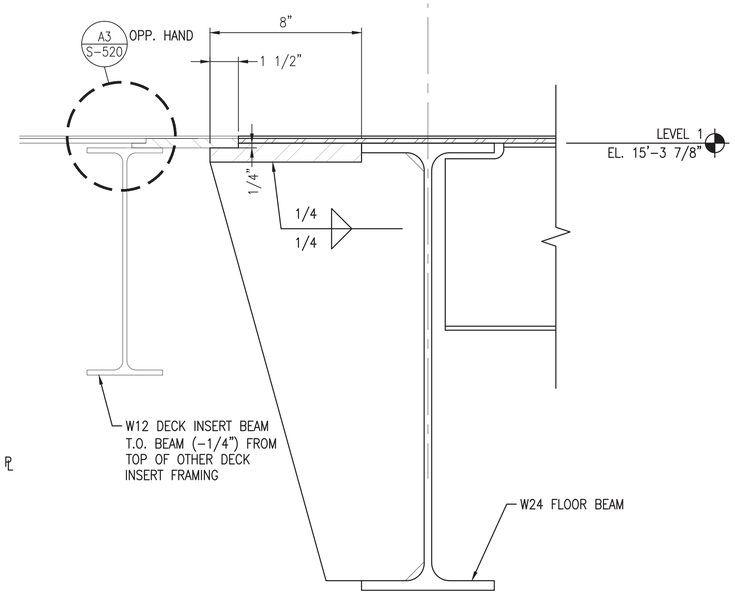

SECTION AT DECK INSERT (A5)

SCALE: 3"=1'-0" S-514

Scale: 6" = 1'-0"
Scale: 3" = 1'-0"
Scale: 1 1/2" = 1'-0"

SYM	DESCRIPTION	DATE	APPR
0	ISSUED FOR CONSTRUCTION	10/28/2016	CBC

NAVFAC

STATE OF MAINE
SAMUEL J. THOMAS
No. 13855
LICENSED PROFESSIONAL ENGINEER
10/28/16
SEAL

Colby Company engineering
A/E INFO

APPROVED
David W. Thurnfield
FOR COMMANDER NAVFAC

ACTIVITY: TIM FISHER, C. 2370.6 BRANCH HEAD
SATISFACTORY TO DATE: 10/28/2016
DES: SJT DRW: ERB CHK: CBC
PMDM: PETER STOCKLESS
BRANCH MANAGER: IAN BODWELL
FEA/DPM&E: AMIN BAHROUR
FIRE PROTECTION: PATRICK BAKAJ

DEPARTMENT OF THE NAVY
NAVAL FACILITIES ENGINEERING COMMAND ~ MID-ATLANTIC
PUBLIC WORKS DEPARTMENT - MAINE
NAVAL FACILITIES ENGINEERING COMMAND
NAVAL SHIPYARD - PORTSMOUTH, NH
KITTERY, ME
PORTSMOUTH NAVAL SHIPYARD
DRY DOCK #1 DEFUELING COMPLEX
M-140 COMPLEX
DECK INSERT AND MISCELLANEOUS DETAILS

EPROJECT NO.: 1363311
CONSTR. CONTR. NO. N40085-17-C-5002
NAVFAC DRAWING NO. 12734863
SHEET 80 OF 188
S-520 DD1-16-944

DRAWFORM REVISION: 10 OCTOBER 2014

10/28/2016 6:42:01 AM X:\297 PORTSMOUTH NAVAL SHIPYARD\297.005.001 - DD#1 DEFUELING COMPLEX DESIGN\DRAWINGS\M140\SHEETS\S-520.DWG

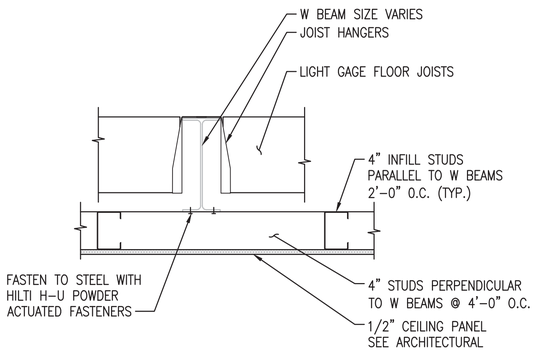

SECTION LIGHT GAGE FRAMING TO W BEAM (D1)

SCALE: 1 1/2"=1'-0" S-406, S-407, S-408, S-409

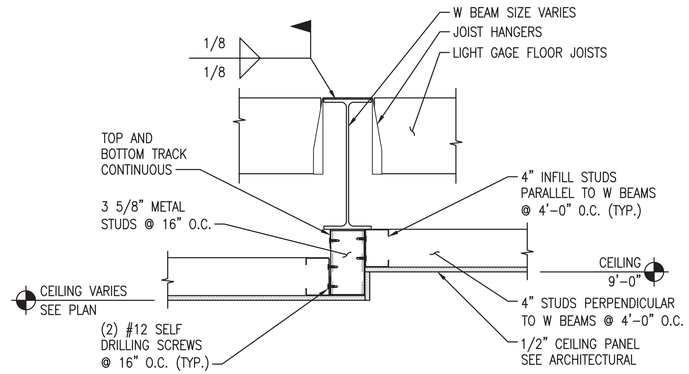

SECTION AT CEILING HEIGHT CHANGE (D2)

SCALE: 1 1/2"=1'-0" S-406, S-407, S-408

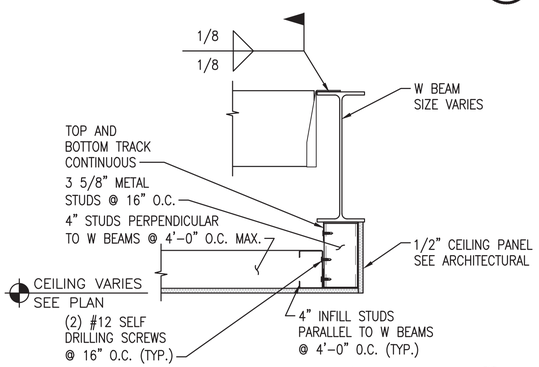

SECTION AT CEILING TERMINATION (C1)

SCALE: 1 1/2"=1'-0" S-406, S-407, S-408, S-409

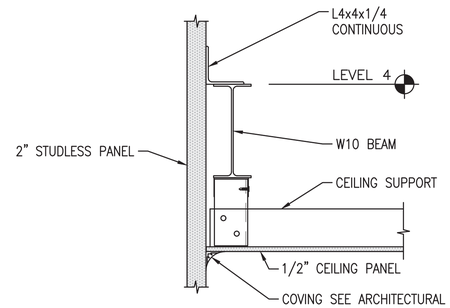

SECTION AT CEILING AND STUDLESS PANEL (C2)

SCALE: 1 1/2"=1'-0" S-406, S-407, S-408, S-409

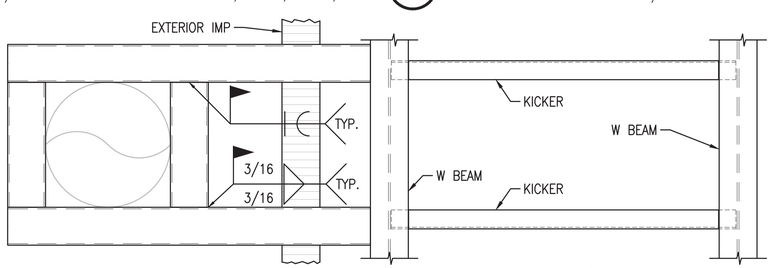

PLAN SECTION AT DUCT SUPPORT (B1)

SCALE: 1"=1'-0" S-521

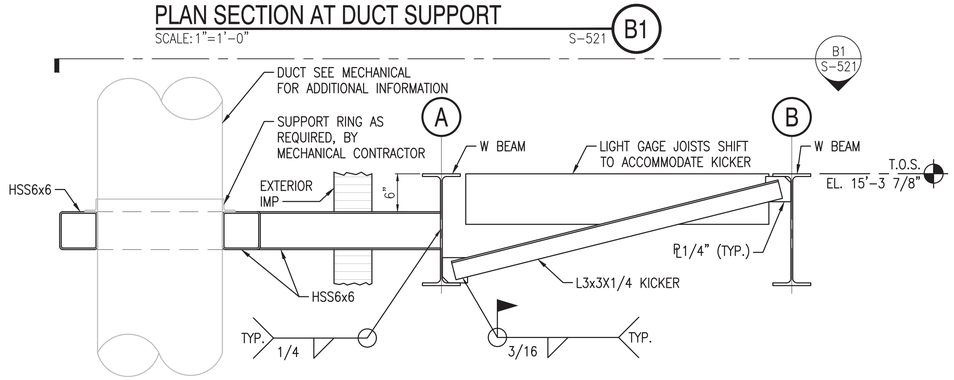

SECTION AT DUCT SUPPORT (A1)

SCALE: 1"=1'-0" S-405, S-410

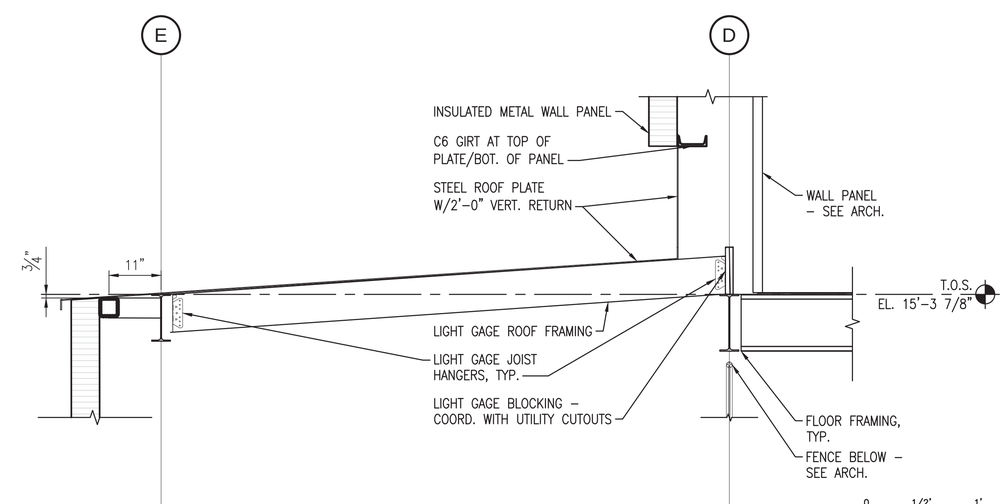

SECTION AT DEMINERALIZER ROOF (A4)

SCALE: 3/4"=1'-0" S-101, S-101A

Scale: 1 1/2" = 1'-0"
Scale: 1" = 1'-0"
Scale: 3/4" = 1'-0"

NOTES

1. SEE SHEET S-001 FOR GENERAL NOTES.
2. LIGHT GAGE FRAMING HANG UNDER PERPENDICULAR FRAMING. FRAME LIGHT GAGE RUNNING PARALLEL WITH W BEAMS/FLOOR FRAMING INTO LIGHT GAGE RUNNING PERPENDICULAR. SPACE LIGHT GAGE FRAMING AT 4'-0" ON CENTER, 6" FROM WALLS AND OPENINGS.

SYM	DESCRIPTION	DATE	APPR
0	ISSUED FOR CONSTRUCTION	10/28/2016	CBC

NAVFAC

STATE OF MAINE — SAMUEL J. THOMAS No. 12734 — LICENSED PROFESSIONAL ENGINEER — 10/28/16 — SEAL

Colby Company engineering — A/E INFO

APPROVED: David W. Thumfeld
FOR COMMANDER NAVFAC
ACTIVITY: TIM FISHER, C. 2370.6 BRANCH HEAD
SATISFACTORY TO DATE: 10/28/2016
DES: SJT | DRW: ERB | CHK: CBC
PMDM: PETER STOCKLESS
BRANCH MANAGER: IAN BODWELL
FEAD/PM&E: AMIN BAHROUR
FIRE PROTECTION: PATRICK BAKAJ

DEPARTMENT OF THE NAVY — NAVAL FACILITIES ENGINEERING COMMAND — PUBLIC WORKS DEPARTMENT - MAINE
NAVAL FACILITIES ENGINEERING COMMAND ~ MID-ATLANTIC — NAVAL SHIPYARD - PORTSMOUTH, NH
PORTSMOUTH NAVAL SHIPYARD — KITTERY, ME
DRY DOCK #1 DEFUELING COMPLEX
M-140 COMPLEX
LITE GAGE FRAMING SECTIONS

EPROJECT NO.: 1363311
CONSTR. CONTR. NO.: N40085-17-C-5002
NAVFAC DRAWING NO.: 12734864
SHEET 81 OF 188
S-521 | DD1-16-945

DRAWFORM REVISION: 10 OCTOBER 2014

10/28/2016 6:42:11 AM X:\297 PORTSMOUTH NAVAL SHIPYARD\297.005.001 - DD#1 DEFUELING COMPLEX DESIGN\DRAWINGS\M140\SHEETS\S-521.DWG

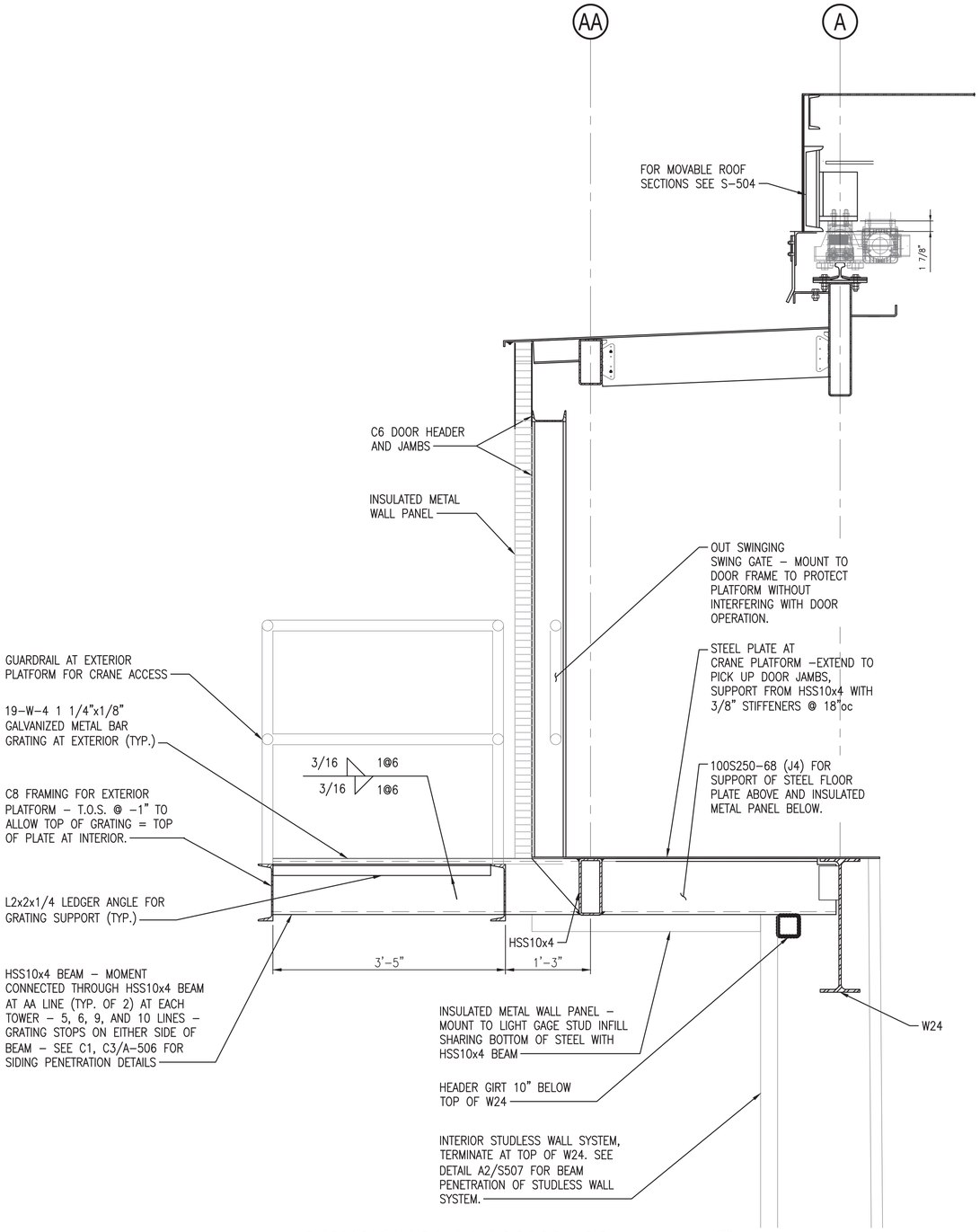

SECTION AT CRANE ACCESS DOOR

SCALE: 1"=1'–0" S–106 A2

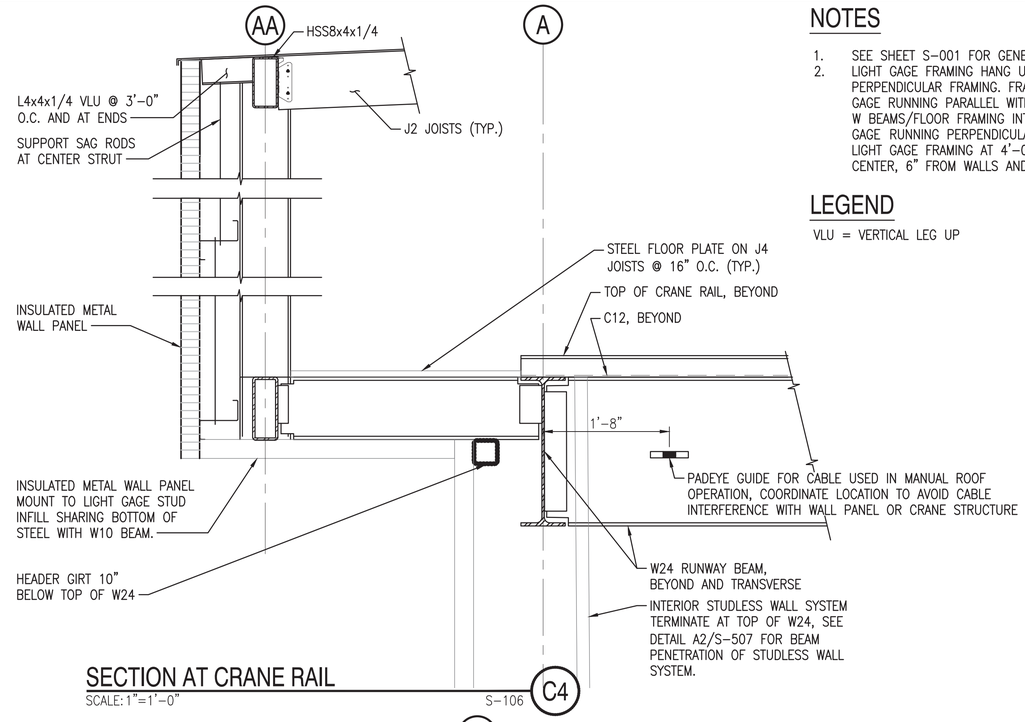

SECTION AT CRANE RAIL

SCALE: 1"=1'–0" S–106 C4

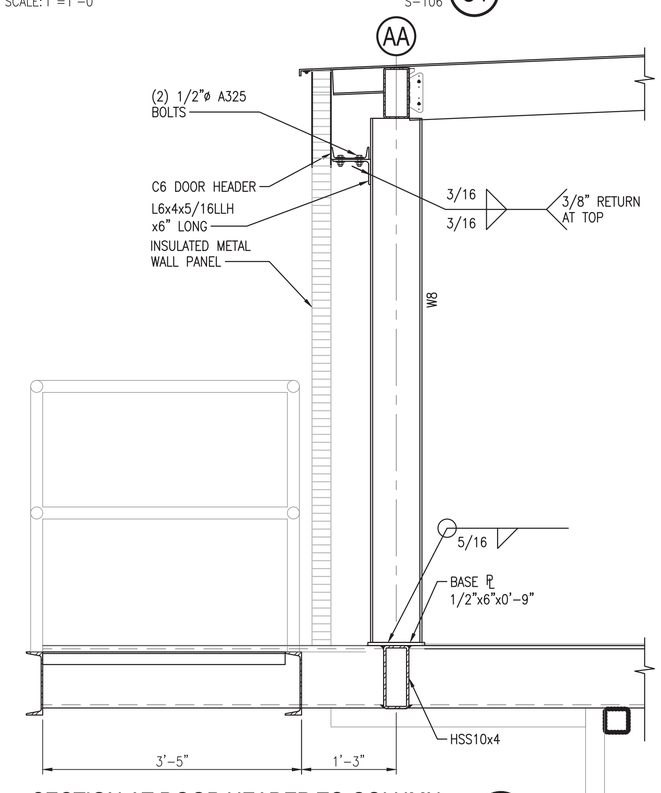

SECTION AT DOOR HEADER TO COLUMN

SCALE: 1"=1'–0" S–106 A4

0 1/2' 1' 2'
Scale: 1" = 1'–0"

NOTES

1. SEE SHEET S–001 FOR GENERAL NOTES.
2. LIGHT GAGE FRAMING HANG UNDER PERPENDICULAR FRAMING. FRAME LIGHT GAGE RUNNING PARALLEL WITH W BEAMS/FLOOR FRAMING INTO LIGHT GAGE RUNNING PERPENDICULAR. SPACE LIGHT GAGE FRAMING AT 4'–0" ON CENTER, 6" FROM WALLS AND OPENINGS.

LEGEND

VLU = VERTICAL LEG UP

SYM	DESCRIPTION	DATE	APPR
0	ISSUED FOR CONSTRUCTION	10/28/2016	CBC

NAVFAC

STATE OF MAINE SAMUEL J. THOMAS No. 12734 LICENSED PROFESSIONAL ENGINEER 10/28/16
SEAL

Colby Company engineering
A/E INFO

APPROVED
David W. Thurnfeld
FOR COMMANDER NAVFAC

ACTIVITY
TIM FISHER
C. 2370.6 BRANCH HEAD

SATISFACTORY TO DATE 10/28/2016
DES SJT DRW ERB CHK CBC
PMDM PETER STOCKLESS
BRANCH MANAGER IAN BODWELL
FEAD/PM&E AMIN BAHROUR
FIRE PROTECTION PATRICK BAKAJ

DEPARTMENT OF THE NAVY
NAVAL FACILITIES ENGINEERING COMMAND ~ MID-ATLANTIC
PUBLIC WORKS DEPARTMENT - MAINE
NAVAL FACILITIES ENGINEERING COMMAND
NAVAL SHIPYARD - PORTSMOUTH, NH
PORTSMOUTH NAVAL SHIPYARD
KITTERY, ME
DRY DOCK #1 DEFUELING COMPLEX
M-140 COMPLEX
SECTIONS AT CRANE LEVEL

EPROJECT NO.: 1363311
CONSTR. CONTR. NO. N40085-17-C-5002
NAVFAC DRAWING NO. 12734865
SHEET 82 OF 188
S-522 DD1-16-946

DRAWFORM REVISION: 10 OCTOBER 2014

10/28/2016 6:42:17 AM X:\297 PORTSMOUTH NAVAL SHIPYARD\297.005.001 - DD#1 DEFUELING COMPLEX DESIGN\DRAWINGS\M140\SHEETS\S-522.DWG

NOTES

1. SEE SHEET S-001 FOR GENERAL NOTES.

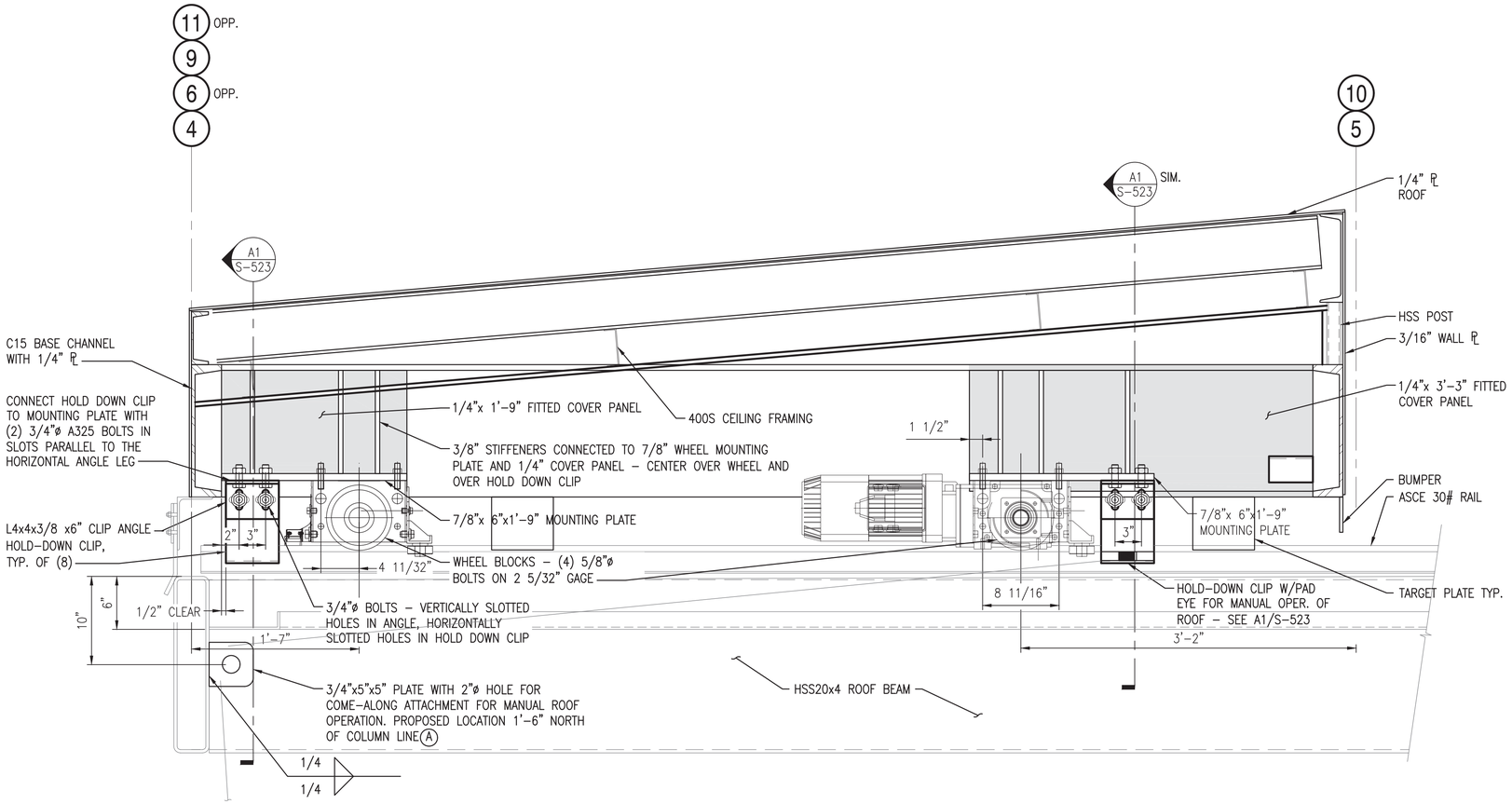

SECTION @ MOVABLE ROOF

SCALE: 1 1/2"=1'-0" S-504 (D2)

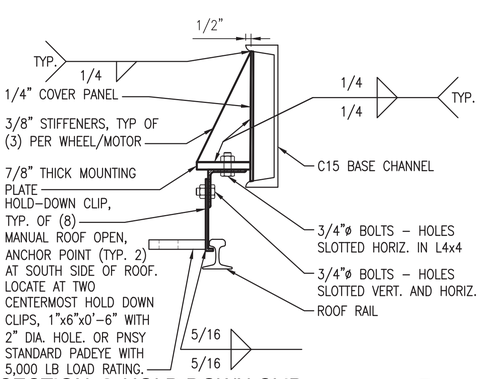

SECTION @ HOLD DOWN CLIP

SCALE: 1 1/2"=1'-0" S-523 (A1)

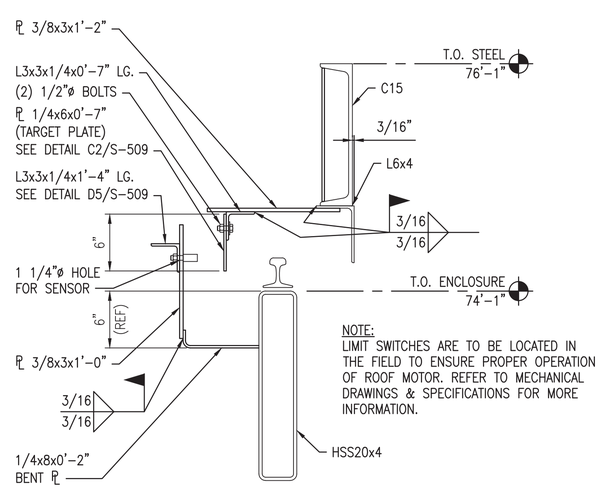

NOTE:
LIMIT SWITCHES ARE TO BE LOCATED IN THE FIELD TO ENSURE PROPER OPERATION OF ROOF MOTOR. REFER TO MECHANICAL DRAWINGS & SPECIFICATIONS FOR MORE INFORMATION.

SECTION @ LIMIT SWITCH/TARGET PLATE MOUNT

SCALE: 1 1/2"=1'-0" S-107, S-108 (A3)

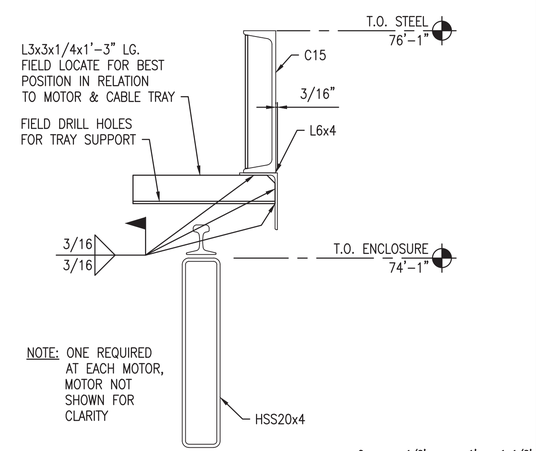

NOTE: ONE REQUIRED AT EACH MOTOR, MOTOR NOT SHOWN FOR CLARITY

SECTION @ CABLE TRAY SUPPORT

SCALE: 1 1/2"=1'-0" (A5)

SYM	DESCRIPTION	DATE	APPR
0	ISSUED FOR CONSTRUCTION	10/28/2016	CBC

NAVFAC

STATE OF MAINE SAMUEL J. THOMAS No. 13363 LICENSED PROFESSIONAL ENGINEER 10/28/16 SEAL

Colby Company engineering A/E INFO

APPROVED David W. Trumfield FOR COMMANDER NAVFAC

ACTIVITY: TIM FISHER, C. 2370.6 BRANCH HEAD

SATISFACTORY TO DATE 10/28/2016

DES SJT DRW BCH CHK CBC

PMDM PETER STOCKLESS

BRANCH MANAGER IAN BODWELL

FEA/DPM&E AMIN BAHROUR

FIRE PROTECTION PATRICK BAKAJ

DEPARTMENT OF THE NAVY
NAVAL FACILITIES ENGINEERING COMMAND
PUBLIC WORKS DEPARTMENT - MAINE

NAVAL FACILITIES ENGINEERING COMMAND ~ MID-ATLANTIC
NAVAL SHIPYARD - PORTSMOUTH, NH

PORTSMOUTH NAVAL SHIPYARD
KITTERY, ME

DRY DOCK #1 DEFUELING COMPLEX
M-140 COMPLEX

MOVABLE ROOF SECTIONS

EPROJECT NO.: 1363311

CONSTR. CONTR. NO. N40085-17-C-5002

NAVFAC DRAWING NO. 12734866

SHEET 83 OF 188

S-523 DD1-16-947

DRAWFORM REVISION: 10 OCTOBER 2014

10/28/2016 6:42:30 AM X:\297 PORTSMOUTH NAVAL SHIPYARD\297.005.001 - DD#1 DEFUELING COMPLEX DESIGN\DRAWINGS\M140\SHEETS\S-523.DWG

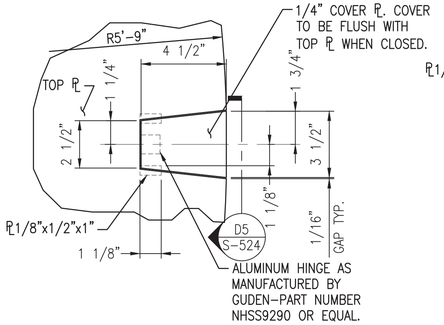

SMALL COVER DETAIL (D1)

SCALE: 3"=1'-0" S-411

3 REQUIRED

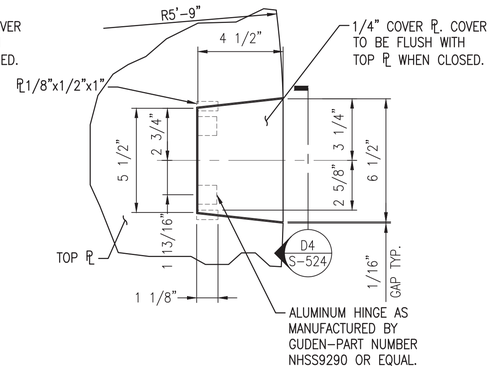

LARGE COVER DETAIL (D2)

SCALE: 3"=1'-0" S-411

3 REQUIRED

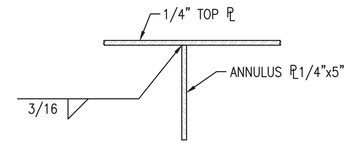

SECTION AT ANNULUS PLATE AND TOP PLATE CONNECTION (D3)

SCALE: 3"=1'-0" S-411

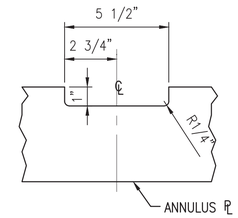

SECTION AT LARGE CUTOUT (D4)

SCALE: 3"=1'-0" S-524

3 REQUIRED

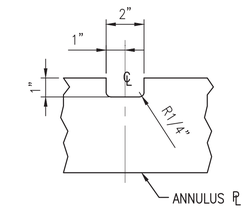

SECTION AT SMALL CUTOUT (D5)

SCALE: 3"=1'-0" S-524

3 REQUIRED

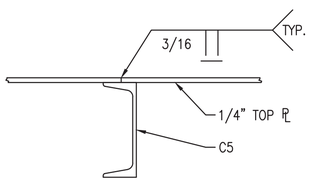

SECTION AT TOP PLATE SPLICE (C1)

SCALE: 3"=1'-0" S-411

NOTE: IF TOP PLATE CANNOT BE FORMED FROM A SINGLE PIECE, SPLICE SHALL BE MADE AS SHOWN AND SHALL BE LOCATED OVER CHANNEL

NOTES

1. SEE SHEET S-001 FOR GENERAL NOTES.

SYM	DESCRIPTION	DATE	APPR
0	ISSUED FOR CONSTRUCTION	10/28/2016	CBC

NAVFAC

STATE OF MAINE — SAMUEL J. THOMAS — No. 12867 — LICENSED PROFESSIONAL ENGINEER — 8/16

SEAL

Colby Company engineering

A/E INFO

APPROVED: David W. Thurnfield

FOR COMMANDER NAVFAC

ACTIVITY: TIM FISHER, C. 2370.6 BRANCH HEAD

SATISFACTORY TO — DATE: 10/28/2016

DES: SJT | DRW: ERB | CHK: CBC

PMDM: PETER STOCKLESS

BRANCH MANAGER: IAN BODWELL

FEA/PM&E: AMIN BAHROUR

FIRE PROTECTION: PATRICK BAKAJ

DEPARTMENT OF THE NAVY
NAVAL FACILITIES ENGINEERING COMMAND
PUBLIC WORKS DEPARTMENT - MAINE

NAVAL FACILITIES ENGINEERING COMMAND ~ MID-ATLANTIC
NAVAL SHIPYARD - PORTSMOUTH, NH

PORTSMOUTH NAVAL SHIPYARD
KITTERY, ME

DRY DOCK #1 DEFUELING COMPLEX
M-140 COMPLEX

DECK INSERT PLUG DETAILS

EPROJECT NO.: 1363311

CONSTR. CONTR. NO.: N40085-17-C-5002

NAVFAC DRAWING NO.: 12734867

SHEET 84 OF 188

S-524 | DD1-16-948

DRAWFORM REVISION: 10 OCTOBER 2014

Scale: 3" = 1'-0"

10/28/2016 6:42:35 AM X:\297 PORTSMOUTH NAVAL SHIPYARD\297.005.001 - DD#1 DEFUELING COMPLEX DESIGN\DRAWINGS\M140\SHEETS\S-524.DWG

NOTES

1. SEE S-001 FOR GENERAL NOTES.
2. * – BASEPLATES MARKED WITH AN ASTERISK (*) REQUIRE ANCHOR RODS TO BE TIED TO UPLIFT RESISTING SYSTEM – MICROPILE OR ROCK ANCHOR REINFORCING BAR. SEE DETAIL C3 ON F-502 OF VOLUME 1.
3. ** – COLUMNS WITH TWO ASTERISKS INDICATES DETAIL CONNECTING COLUMN ANCHOR RODS TO ROCK ANCHORS WHERE ROCK ANCHORS ARE NOT DIRECTLY BENEATH COLUMN. SEE DETAILS FOR MULTIPLE ROCK ANCHORS WITHIN C3/F-502 OF VOLUME 1.
4. SPLICE LOCATION – SEE TYPICAL DETAILS, DESIGN SPLICE FOR 40 KIPS TENSION, AND 10 KIPS SHEAR IN EITHER HORIZONTAL DIRECTION, MIN.

T.O. ENCLOSURE																		T.O. ENCLOSURE
74'-1" CRANE LEVEL																		74'-1" CRANE LEVEL
65'-8 9/16" LEVEL 5																		65'-8 9/16" LEVEL 5
60'-4 1/4" LEVEL 4																		60'-4 1/4" LEVEL 4
47'-10 1/4" LEVEL 3			W10X49 (4'-0 TYP)		W10X49	W10X49		SPLICE		HSS4X4X1/4	HSS8X8X5/16					HSS8X8X5/16		47'-10 1/4" LEVEL 3
35'-3 7/8" LEVEL 2					W10X49		W10X30	W10X49				HSS8X8X5/16	W10X33	HSS5x4/4x1/4				35'-3 7/8" LEVEL 2
25'-3 7/8" LEVEL 1																		25'-3 7/8" LEVEL 1
15'-3 7/8" LEVEL 0	W10X33	W10X33							W10X30	W10X30					HSS6X6X1/4		HSS6X6X1/4	15'-3 7/8" LEVEL 0
0"																		0"
Column Locations	A-1, B(3 9/16)-1, C(10 9/16")-1, D-1	A-2, D-2	A-4, A-11, D-4, D-5, D-6, D-9, D-10, D-11	A-5, A-10	A-6, A-9	A-7, A-8	A-7.4, A-7.6	A-13, D-13	A-14, C.5-14, D-14	B(5'-3")-7, B(5'-3")-7.4, 7.6, 8	C-6, C-9	C-7, C-8	D-7, D-8	D-7.5	E-5, E-6, E-9, E-10,	C-4, C-11	E-4, E-7, E-8, E-10	
BASEPLATE TYPE	BP-11*	BP-10	BP-11*	BP-11(-SL)*	BP-10(-SL)	BP-10(-SL)*	BP-11**	BP-10(-SL)	BP-11*	N/A	BP-12	BP-12*	BP-10(-SL)	N/A	BP-14			

GRAPHICAL COLUMN SCHEDULE

SCALE: N.T.S.

A1

SYM	DESCRIPTION	DATE	APPR
0	ISSUED FOR CONSTRUCTION	10/28/2016	CBC

NAVFAC

STATE OF MAINE — SAMUEL J. THOMAS — LICENSED PROFESSIONAL ENGINEER — 10/28/16 — SEAL

Colby Company engineering

A/E INFO:

APPROVED: David W. Trumfield
FOR COMMANDER NAVFAC

ACTIVITY: TIM FISHER, C. 2370.6 BRANCH HEAD
SATISFACTORY TO DATE 10/28/2016
DES DS | DRW ERB | CHK CBC
PMDM PETER STOCKLESS
BRANCH MANAGER IAN BODWELL
FEAD/PM&E AMIN BAHROUR
FIRE PROTECTION PATRICK BAKAJ

DEPARTMENT OF THE NAVY
NAVAL FACILITIES ENGINEERING COMMAND
PUBLIC WORKS DEPARTMENT - MAINE
NAVAL FACILITIES ENGINEERING COMMAND ~ MID-ATLANTIC
NAVAL SHIPYARD - PORTSMOUTH, NH
PORTSMOUTH NAVAL SHIPYARD
KITTERY, ME
DRY DOCK #1 DEFUELING COMPLEX
M-140 COMPLEX
COLUMN SCHEDULE

EPROJECT NO.: 1363311
CONSTR. CONTR. NO. N40085-17-C-5002
NAVFAC DRAWING NO. 12734868
SHEET 85 OF 188
S-600 | DD1-16-949

DRAWFORM REVISION: 10 OCTOBER 2014

10/28/2016 6:42:39 AM X:\297 PORTSMOUTH NAVAL SHIPYARD\297.005.001 - DD#1 DEFUELING COMPLEX DESIGN\DRAWINGS\M140\SHEETS\S-600.DWG

NOTES

1. SEE S-001 FOR GENERAL NOTES.
2. * – BASEPLATES MARKED WITH AN ASTERISK (*) REQUIRE ANCHOR RODS TO BE TIED TO UPLIFT RESISTING SYSTEM – MICROPILE OR ROCK ANCHOR REINFORCING BAR. SEE DETAIL C3 ON F-502 OF VOLUME 1.
3. ** – COLUMNS WITH TWO ASTERISKS INDICATES DETAIL CONNECTING COLUMN ANCHOR RODS TO ROCK ANCHORS WHERE ROCK ANCHORS ARE NOT DIRECTLY BENEATH COLUMN. SEE DETAILS FOR MULTIPLE ROCK ANCHORS WITHIN C3/F-502 OF VOLUME 1.

T.O. ENCLOSURE									T.O. ENCLOSURE
74'-1" CRANE LEVEL			W8X15	W8X15					74'-1" CRANE LEVEL
65'-8 9/16" LEVEL 5									65'-8 9/16" LEVEL 5
60'-4 1/4" LEVEL 4									60'-4 1/4" LEVEL 4
47'-10 1/4" LEVEL 3									47'-10 1/4" LEVEL 3
35'-3 7/8" LEVEL 2									35'-3 7/8" LEVEL 2
25'-3 7/8" LEVEL 1		HSS4X4X1/4						W10X49	25'-3 7/8" LEVEL 1
15'-3 7/8" LEVEL 0	W10X33				HSS4x4x1/4	(2-11 3/4") HSS4X4X1/4	(2-11 3/4") HSS4X4X1/4		15'-3 7/8" LEVEL 0
0"									0"
Column Locations	G-7, G-8	G-7.5	AA-4, AA-6, AA-9, AA-11	AA-5, AA-10	AA.5-7.6	AA.5-8	BB-8, A-1, A-5, A-9	CC-7.4, CC-7.6	
BASEPLATE TYPE	BP-11*	BP-11*	N/A	N/A	N/A		BP-13	BP-11**	

GRAPHICAL COLUMN SCHEDULE

SCALE: N.T.S.

A1

SYM	DESCRIPTION	DATE	APPR
0	ISSUED FOR CONSTRUCTION	10/28/2016	CBC

NAVFAC

STATE OF MAINE
SAMUEL J. THOMAS
No. 7000
LICENSED PROFESSIONAL ENGINEER
10/28/16
SEAL

Colby Company engineering
A/E INFO

APPROVED
David W. Thurnfeld
FOR COMMANDER NAVFAC

ACTIVITY
TIM FISHER
C. 2370.6 BRANCH HEAD

SATISFACTORY TO DATE 10/28/2016

DES DS DRW ERB CHK CBC

PMDM PETER STOCKLESS

BRANCH MANAGER IAN BODWELL

FEAD/PM&E AMIN BAHROUR

FIRE PROTECTION PATRICK BAKAJ

DEPARTMENT OF THE NAVY
NAVAL FACILITIES ENGINEERING COMMAND
PUBLIC WORKS DEPARTMENT - MAINE

NAVAL FACILITIES ENGINEERING COMMAND ~ MID-ATLANTIC
NAVAL SHIPYARD - PORTSMOUTH, NH

PORTSMOUTH NAVAL SHIPYARD
KITTERY, ME

DRY DOCK #1 DEFUELING COMPLEX
M-140 COMPLEX

COLUMN SCHEDULE

EPROJECT NO.: 1363311

CONSTR. CONTR. NO.
N40085-17-C-5002

NAVFAC DRAWING NO.
12734869

SHEET 86 OF 188

S-601 | DD1-16-950

DRAWFORM REVISION: 10 OCTOBER 2014

10/28/2016 6:42:42 AM X:\297 PORTSMOUTH NAVAL SHIPYARD\297.005.001 - DD#1 DEFUELING COMPLEX DESIGN\DRAWINGS\M140\SHEETS\S-601.DWG

ELEVATION, SECTION OR DETAIL SYMBOLS

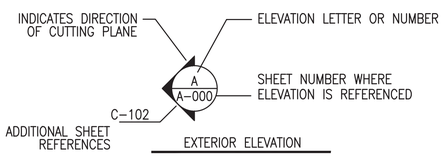

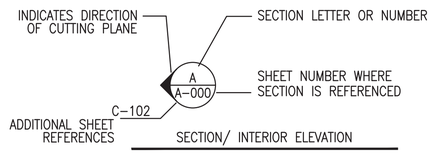

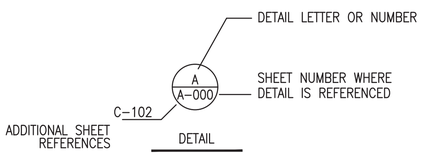

LEGEND

- CONCRETE
- STEEL
- INSULATION – RIGID
- EARTH
- CRUSHED STONE
- INSULATED METAL PANEL
- 2" STUDLESS WALL PANEL AND 1/2" LINER PANEL
- NON–SLIP PAINT SURFACE
- 204 DOOR TAG
- 1 KEYNOTE
- 2 HOUR FIRE RATED WALL
- REFERENCE PLANE ELEVATION

ABBREVIATIONS

AFF	ABOVE FINISH FLOOR
AFG	ABOVE FINISH GRADE
ACOUS.	ACOUSTICAL
ALUM	ALUMINUM
APPROX.	APPROXIMATELY
BLDG.	BUILDING
BOT.	BOTTOM
C.B.	CATCH BASIN
C.J.	CONTROL JOINT
C.O.	CLEAN OUT
C.R.	COLD ROLLED
CEM.	CEMENT
CL / ℄	CENTERLINE
CLG.	CEILING
COL.	COLUMN
CONC.	CONCRETE
CONST.	CONSTRUCTION
CONT.	CONTINUOUS
DBL.	DOUBLE
DTL.	DETAIL
DIA.	DIAMETER
DIM.	DIMENSION
DN	DOWN
DWG.	DRAWING
E.J.	EXPANSION JOINT
EA.	EACH
EL.	ELEVATION
ELECT.	ELECTRICAL
EPDM	ETHYLENE PROPYLENE DIENE MONOMER RUBBER
EQ.	EQUAL
EQUIP.	EQUIPMENT
EXIST.	EXISTING
EXP.	EXPANSION
EXT.	EXTERIOR
F/	FACE OF
F.D.	FLOOR DRAIN
FDN	FOUNDATION
FF	FINISH FLOOR
FFE	FINISHED FLOOR ELEVATION
FIN.	FINISH
FIP	FOAM IN PLACE
FLR.	FLOOR
FLUOR.	FLUORESCENT
FP	FIRE PROTECTION
FT	FEET
GA.	GAUGE
GALV.	GALVANIZED
GEN.	GENERAL
H.M.	HOLLOW METAL
HDWR	HARDWARE
HD.	HEAD
HORIZ.	HORIZONTAL
HR	HOUR
HT.	HEIGHT
HVAC	HEATING VENTILATING AIR CONDITIONING
I.D.	INSIDE DIAMETER
IMP	INSULATED METAL PANEL
IN.	INCH
INCAN.	INCANDESCENT
INSUL.	INSULATION
INT.	INTERIOR
JT.	JOINT
LT	LIGHT
LT. WT.	LIGHTWEIGHT
MANUF.	MANUFACTURER
MATL	MATERIAL
MAX.	MAXIMUM
MECH.	MECHANICAL
MIN.	MINIMUM
MLCP	INTERIOR METAL LINER CEILING PANEL
MTL	METAL
NIC	NOT IN CONTRACT
NO	NUMBER
NTS	NOT TO SCALE
O.C.	ON CENTER
O.D.	OUTSIDE DIAMETER
O.E.	ROUGH OPENING
OPP	OPPOSITE
OTS	OPEN TO STRUCTURE
PHIL	PHILLIPS
PL / ℙ	PLATE
PNSY	PORTSMOUTH NAVAL SHIPYARD
PTD	PAINTED
PW	PASSAGEWAY(S)
RAD.	RADIUS
REQ.	REQUIRED
RET.	RETAINING
RM.	ROOM
S.S.	STAINLESS STEEL
S.V.	SHEET VINYL
SCHED.	SCHEDULE
SECT.	SECTION
SHT.	SHEET
SIM.	SIMILAR
SPEC.	SPECIFICATION
SQ.	SQUARE
STD	STANDARD
STL	STEEL
STRUCT.	STRUCTURAL
T.O.	TOP OF
T.O.W.	TOP OF WALL
TEL.	TELEPHONE
THRU	THROUGH
TYP.	TYPICAL
U.O.N.	UNLESS OTHERWISE NOTED
VERT.	VERTICAL
VIF	VERIFY IN FIELD
W/	WITH
WC	WATER COLUMN
W.P.	WATERPROOF
W.W.F.	WELDED WIRE FABRIC

GENERAL NOTES

1. ANY AND ALL CRANE INFORMATION IS FOR INFORMATIONAL PURPOSES ONLY. DETAILS TO BE PROVIDED BY CRANE MANUFACTURER AND SHALL BE COORDINATED BY THE CONTRACTOR.
2. CONTRACTOR SHALL COORDINATE THE INTERIOR AND EXTERIOR FRAMING TO ENSURE SPACING AND PLACEMENT OF THE STRUCTURAL MEMBERS MEETS THE REQUIREMENTS OF BOTH THE INTERIOR AND EXTERIOR WALL SYSTEMS. THE COORDINATION SHALL INCLUDE, BUT NOT BE LIMITED TO THE FOLLOWING: PLACEMENT OF FRAMING MEMBERS, TOLERANCE OF FRAMING MEMBERS, FRAMING AT WALL SYSTEM PENETRATIONS, INSTALLATION OF UTILITIES BETWEEN THE TWO WALL SYSTEMS, AND THE CAPABILITY TO ATTACH TO THE FRAMING WITHIN THE REQUIREMENTS OF THE WALL SYSTEM MANUFACTURERS.
3. SUBMIT A WRITTEN REPORT PER SPECIFICATION SECTION 07 42 63 PARAGRAPH 3.7.2 OF DEFICIENCIES THAT ARE OBSERVED FOLLOWING INSTALLATION.
4. FLASHING SHALL BE 24GA SHEETS, SEE SPECIFICATION SECTION 07 60 00. FLASHING COLOR: SELECTED BY GOVERNMENT.
5. ALL WELDING FOR ARCHITECTURAL ITEMS SHALL BE PER APPLICABLE SPECIFICATION SECTIONS. RECOMMENDED THAT WELDING OF ARCHITECTURAL ITEMS (EX. FLASHING, COMPLEMENTING WALL / CEILING SUPPORTS) BE SHOP FABRICATED TO GREATEST EXTENT POSSIBLE PRIOR TO ERECTION OF STRUCTURAL MEMBERS. ALL EXTERIOR FACING WELDS TO BE CONTINUOUS AND WEATHERTIGHT.
6. FLASHING SHALL BE A COMBINATION OF THE WALL SYSTEM MANUFACTURERS STANDARD FLASHING AS REQUIRED TO MEET WARRANTY REQUIREMENTS AND CUSTOM FLASHING. THE EXTERIOR WALL SYSTEM WILL EXPERIENCE NEGATIVE PRESSURE FROM THE HVAC SYSTEM. ALL FLASHING SHALL BE DESIGNED TO KEEP WATER FROM ENTERING THE BUILDINGS.
7. BUILDING SEALING: THE COMBINED PRODUCT OF THE BUILDING ELEMENTS, INTERIOR AND EXTERIOR FLASHING, AND INTERIOR AND EXTERIOR SEALS SHALL BE INSTALLED SO AS TO BE CAPABLE OF RESISTING THE REQUIRED 0.2" WATER COLUMN VACUUM LOAD.
8. RESINOUS FLOOR COATINGS PLACED ON NEW CONCRETE SHALL BE TESTED TO ENSURE THAT THE MOISTURE LEVELS MEET THOSE REQUIRED BY THE COATING MANUFACTURER. SUBMIT MOISTURE LEVEL COMPLIANCE TESTS PER THE SPECIFICATION 15 DAYS PRIOR TO PLACEMENT OF COATINGS.
9. UNLESS NOTED OTHERWISE ALL DETAILS AND RELEVANT DIMENSIONS FOR EXTERIOR STAIRS, GRATING, LANDINGS, RAILINGS AND LADDERS ARE TO BE FOUND IN STRUCTURAL.
10. ALL FIXED GUARD RAILING TO BE 42" HIGH UNLESS STATED OTHERWISE. ALL HANDRAIL TO BE 34" HIGH UNLESS STATED OTHERWISE.
11. DUE TO THE OPERATIONAL REQUIREMENTS AND UNIQUE BUILDING ENVELOPE CIRCUMSTANCES, THERMAL BRIDGING IS TO BE MINIMIZED WHEREVER POSSIBLE WITHIN THE STRUCTURE. FOAM–IN–PLACE INSULATION IS TO BE USED AT ALL LOCATIONS WHERE ROCK–WOOL INSULATION IS UNABLE TO BE PLACED.
12. NO UNCONTROLLED OPENINGS IN ANY ENCLOSURE TO BE GREATER THAN 96 SQUARE INCHES DUE TO SECURITY REQUIREMENTS.
13. ALL INTERIOR FACING FASTENERS TO BE CAPTIVE FASTENING, UNLESS STATED OR DETAILED OTHERWISE, IN ORDER TO PREVENT ANY POTENTIAL DEBRIS WITHIN AREA OF OPERATIONS.
14. ALL SAFETY GATES TO BE 24" WIDE UNLESS SHOWN OTHERWISE IN DRAWINGS.

M-140 ENCLOSURE SPECIFIC NOTES

1. GROUND LEVEL IS TO BE 4 5/16" BELOW LEVEL OF RAILCAR RAILS.

MATERIALS

EXTERIOR

INSULATED METAL PANEL (IMP) ASSEMBLIES
SPECIFICATION SECTION (07 42 63)

1. THE MAIN MATERIAL TO BE USED AS THE VERTICAL PROTECTIVE SKIN OF THE STRUCTURES IS TO BE INSULATED METAL PANEL (IMP) AND CONSISTS OF EITHER A 3 IN THICK PANEL OR A 6 INCH (2HR FIRE RATED) PANEL AS SHOWN IN THE DRAWINGS. THE IMP PANEL IS A SINGLE–COMPONENT SYSTEM PROVIDING AN EXTERIOR WEATHER BARRIER, INSULATING CORE AND INTERIOR VAPOR BARRIER.
2. AIR LEAKAGE MUST CONFORM TO THE LIMITS THROUGH THE WALL ASSEMBLY AREA WHEN TESTED ACCORDING TO ASTM E283.
3. THE IMP SHALL HAVE ABSOLUTELY NO UNCONTROLLED WATER PENETRATION THROUGH ANY OF THE PANEL JOINTS, HAVE NO WATER PENETRATION WHEN TESTED IN ACCORDANCE WITH ASTM E331, HAVE NO EVIDENCE OF WATER LEAKAGE WHEN TESTED ACCORDING TO AAMA 501.1 AND BE ABLE TO COMPLETELY RESIST WATER INFILTRATION AT THE FACILITY REQUIRED 0.2" WC VACUUM LOAD ON THE INTERIOR OF THE STRUCTURE.
4. THE IMP SHALL HAVE A POLYISO OR POLYURETHANE FOAM CORE AND SHALL PROVIDE A MINIMUM R–VALUE OF 7.5/IN OF THICKNESS WHEN TESTED IN ACCORDANCE WITH ASTM C518 AT A MEAN TEMPERATURE OF 75 DEG F.
5. JOINTS BETWEEN WALL PANELS REQUIRE AN EXTENSIVE AND PARTICULAR SEALANT REQUIREMENTS AND ARE OF HIGH IMPORTANCE TO OPERATIONS. SEALANT SHALL MEET THE REQUIREMENTS OF THE WALL PANEL MANUFACTURER SPECIFICATION SECTION (07 42 63) AND JOINT SEALANT SPECIFICATION SECTION (07 92 00).
6. IN ALL BASE AND STACK JOINT CONDITIONS, IMP TO HAVE A MINIMUM AND CONTINUOUS 3" HEIGHT VERTICAL LEG FOR PANEL ATTACHMENT BEHIND. THERE IS TO BE A CONTINUOUS BUTYL SEALANT WITH MARRIAGE BEAD ALONG THIS CONTINUOUS FACE BETWEEN THE BACKSIDE OF THE IMP AND THE 3" HIGH VERTICAL LEG.
7. A SELF–ADHERING VAPOR BARRIER IS TO BE INSTALLED AT ALL WARM SIDE AREAS OF IMP (INTERIOR SIDE) IN BETWEEN INTERIOR FACE OF IMP AND CORNER TRIM/FLASHING PER MANUFACTURER'S STANDARD DETAILS. THIS IS TO MAINTAIN THE CONTINUOUS VAPOR BARRIER PLANE WHEREVER THE IMP ASSEMBLY IS BROKEN SUCH AS AT CORNERS, STACK JOINTS, AND IMP SIZE TRANSITIONS.
8. EXTRA CARE IS TO BE TAKEN WHEN APPLYING SEALANTS AT ALL IMP JOINTS, SEAMS AND TERMINATIONS DUE TO INTERIOR CLEANLINESS AND INTERIOR AIR REGULATION REQUIREMENTS OF THE FACILITY.
9. IMP, WHERE TO BE USED AS HORIZONTAL FACE, TO BE ADHERED TO STRUCTURE PER MANUFACTURER'S SPAN DESIGN LOAD REQUIREMENTS AND INSTALLED TO SAME PERFORMANCE REQUIREMENTS AS ALL VERTICALLY ORIENTED PANELS.

METAL PLATE ROOF

1. METAL PLATE ROOFING IT TO BE USED THROUGHOUT THE FACILITY WITH SLOPES AS SHOWN IN THE DRAWING PACKAGES. THICKNESS OF PLATE ARTICULATED WITHIN THE DRAWING PACKAGES.
2. ALL METAL PANEL ROOF EDGES TO HAVE A 2" DRIP EDGE, MEASURED OFF OF FACE OF WALL BELOW. THE DRIP EDGE IS TO RETURN DOWNWARD MINIMUM OF 1". THE UNDERSIDE OF THIS METAL PLATE ROOF EDGE IS INTENDED TO PROVIDE A WEATHER–PROTECTED FACE THAT THE TOP EDGE PERIMETER FLASHING OF THE IMP CAN FASTEN TO, IN ORDER TO BETTER COMBAT POTENTIAL WATER INFILTRATION.
3. AT THE UNDERSIDE OF ALL EXPOSED METAL PLATE ROOFING, THERE IS TO BE ROCKWOOL INSULATION ATTACHED TO UNDERSIDE OF METAL PLATE ROOFING BY WELDED PINS AND RETAINER CAPS PER MANUFACTURER'S INSTRUCTIONS. ROCKWOOL TO BE CONTINUOUS ALONG ENTIRE UNDERSIDE OF METAL PLATE ROOF AND TERMINATE AGAINST BACKSIDE OF IMP WALLS TO AVOID ANY THERMAL BRIDGING. ANY POTENTIAL GAPS AT THESE JOINTS WITH THE IMP THAT CANNOT BE FILLED WITH ROCKWOOL SHALL BE FILLED WITH FOAMED–IN–PLACE INSULATION (PER SPECIFICATION SECTION 07 21 19) IN ORDER TO AVOID ANY THERMAL BRIDGING AND TO CREATE FULLY INSULATED BOUNDARY WITHIN THE STRUCTURES.

INTERIOR

ALL INTERIOR FINISHES SHALL MEET THE REQUIREMENTS OF CLASS A OF NFPA 801 (FLAME SPREAD INDEX BETWEEN 0–25 AND SMOKE DEVELOPED INDEX BETWEEN 0–450). NO OPENING GREATER THAN 96 SQ IN ALLOWED WITHIN ANY ENCLOSURE. THIS IS FOR SECURITY PURPOSES AND IS TYP. OF ALL STRUCTURES IN COMPLEX.

INTERIOR METAL LINER CEILING PANELS (MLCP)
SPECIFICATION SECTION (07 42 13) AND AS APPLICABLE

1. THE MLCP IS TO BE INSTALLED AT ALL NON–RCA DESIGNATED AREAS WHERE ROCKWOOL INSULATION IS APPLIED TO UNDERSIDE OF METAL PLATE ROOF.

MATERIALS (CONTINUED)

2. MLCP IS TO HAVE WEATHERTIGHT SEAL AT ALL CORNERS, JOINTS AND SEAMS. CLOSURE STRIPS TO BE USED AT ALL SEAMS OF MLCP AS WELL AS AT ANY CONNECTION TO IMP WALL PANELS IN ORDER TO CREATE CONTINUOUS SEAL AT BOTH PANEL SEAMS AND PERIMETER EDGES.

INTERIOR WALL AND CEILING SYSTEM
SPECIFICTAION SECTION (09 73 00) AND AS APPLICABLE

1. THE INTERIOR WALL AND CEILING SYSTEM IS DESIGNED TO FORM AN AIRTIGHT BARRIER SYSTEM WITHIN THE INTERIOR BUILDING FACES AND SHALL BE INSTALLED IN SUCH A MANNER THAT IT CAN RESIST 0.2" WC VACUUM LOAD FROM THE BUILDING HVAC SYSTEM.
2. THE INTERIOR WALL AND CEILING SYSTEM IS TO BE USED IN ALL RADIOLOGICALLY CONTROLLED AREAS (RCA) OF THE DD#1 COMPLEX.
3. THE INTERIOR SURFACES OF THE ENCLOSURE ARE DESIGNED TO BE SMOOTH, CLEANABLE, AND COMPLETELY SEALED IN ORDER TO MAINTAIN THE NEGATIVE AIR PRESSURE WORKING CONDITIONS. THIS IS ACCOMPLISHED USING THE PRODUCTS SPECIFIED AND PROPER APPLICATION AND INSTALLATION OF FLASHING, TRIM AND SEALANT AS REQUIRED TO CLOSE ALL GAPS, SEAMS AND VOIDS BETWEEN ADJACENT MATERIALS AND SURFACES.
4. CONTINUOUS SEALANT IS TO BE APPLIED AT ALL PANEL SEAMS, TERMINATIONS AND TRIM EDGES. SEALANT TO BE CLASS A AND COLOR MATCHED TO WALL AND CEILING PANELS.
5. IF NOT OTHERWISE SPECIFICALLY DETAILED WITHIN THE PACKAGE, MANUFACTURER'S STANDARD DETAILS FOR THE 2" STUDLESS AND 1/2" LINER PANEL CEILING ARE TO BE USED AT ALL INTERIOR SURFACES INCLUDING, BUT NOT LIMITED TO, CORNERS, EDGES, SOFFITS, JOINTS AND TERMINATIONS.
6. DOORS WITHIN INTERIOR WALL SYSTEM TO HAVE MINIMUM CLEARANCE FROM A PERPENDICULAR WALLFACE OF 5 1/4" DUE TO JAMB, COVING AND DOOR HANDLE CLEARANCES.

SYM	DESCRIPTION	DATE	APPR
0	ISSUED FOR CONSTRUCTION	10/28/2016	CBC

NAVFAC

REGISTERED ARCHITECT DONALD M. DYER No. 859 STATE OF MAINE
10/28/16

Colby Company engineering

A/E INFO

APPROVED
David W. Thurnfield
FOR COMMANDER NAVFAC
ACTIVITY
TIM FISHER
C. 2370.6 BRANCH HEAD
SATISFACTORY TO DATE 10/28/2016
DES GJN | DRW GJN | CHK DMD
PMDM PETER STOCKLESS
BRANCH MANAGER IAN BODWELL
FEAD/PM&E AMIN BAHROUR
FIRE PROTECTION PATRICK BAKAJ

DEPARTMENT OF THE NAVY
NAVAL FACILITIES ENGINEERING COMMAND
PUBLIC WORKS DEPARTMENT - MAINE
NAVAL FACILITIES ENGINEERING COMMAND ~ MID-ATLANTIC
NAVAL SHIPYARD - PORTSMOUTH, NH
PORTSMOUTH NAVAL SHIPYARD
KITTERY, ME
DRY DOCK #1 DEFUELING COMPLEX
M-140 COMPLEX
ARCHITECTURAL LEGEND, ABBREVIATIONS AND GENERAL NOTES

EPROJECT NO.: 1363311
CONSTR. CONTR. NO. N40085-17-C-5002
NAVFAC DRAWING NO. 12734870
SHEET 87 OF 188
A-001 | DD1-16-951

DRAWFORM REVISION: 10 OCTOBER 2014

10/28/2016 6:42:47 AM X:\297 PORTSMOUTH NAVAL SHIPYARD\297.005.001 - DD#1 DEFUELING COMPLEX DESIGN\DRAWINGS\M140\SHEETS\A-001.DWG

KEYED NOTES

1. 3" INSULATED METAL PANEL
2. 6" INSULATED METAL PANEL, 2HR FIRE RATED
3. 2" INTERIOR STUDLESS WALL PANEL
4. 1/4" STEEL PLATE ROOF, SLOPE (UNLESS STATED OTHERWISE) IN DIRECTION INDICATED
5. DEMINERALIZER (DEMIN) BY PNSY, SEE GA-100 & GA-100A
6. 8'-0" HIGH CONCRETE DEMIN SHIELDING WALL
7. WIRE MESH PARTITION TO UNDERSIDE OF STRUCTURE
8. 6" DIA UTILITY CUTOUT LOCATED 1'-0" ABOVE TOP OF CURB. SEE SHEET DETAIL D2/A-507
9. 5'-0" HIGH TOOL COLUMN PEDESTAL
10. DECK INSERT. SEE A-401 FOR DETAILS
11. 5'-2" HIGH HINGED WALL PANEL, SEE A-401
12. 6" UTILITY CUTOUT FOR CONNECTION BETWEEN DEMIN AND LEVEL 01 – SEE DETAIL A2/A-507
13. APD HOSE CUTOUT (2") – SEE DTL C1/A-507
14. 1/2" LINER PANEL CEILING
15. 1/4" STEEL PLATE WALL PANEL
16. 1/4" STEEL PLATE ROOF WITH NON-SLIP PAINT

NOTES

1. SEE A-001 FOR GENERAL NOTES, ABBREVIATIONS, AND LEGEND.
2. OPENINGS IN WIRE MESH PARTITION AND PERSONNEL GATE SHALL BE MINIMIZED. OPENINGS MUST HAVE AT LEAST ONE DIMENSION <6". CHAINLINK FENCE TO GO TO UNDERSIDE OF STRUCTURE ABOVE WITH CUTOUTS AROUND STRUCTURAL MEMBERS AS REQUIRED.
3. INTERIOR METAL LINER CEILING PANEL ABOVE RAILCAR ENCLOSURES, STORAGE ANNEX AND DEMIN AREAS TO FOLLOW AND ADHERE TO STRUCTURAL MEMBERS ABOVE AND ENCAPSULATE PINNED ROCKWOOL INSUL. SEE A-107 FOR ADDITIONAL INFORMATION.

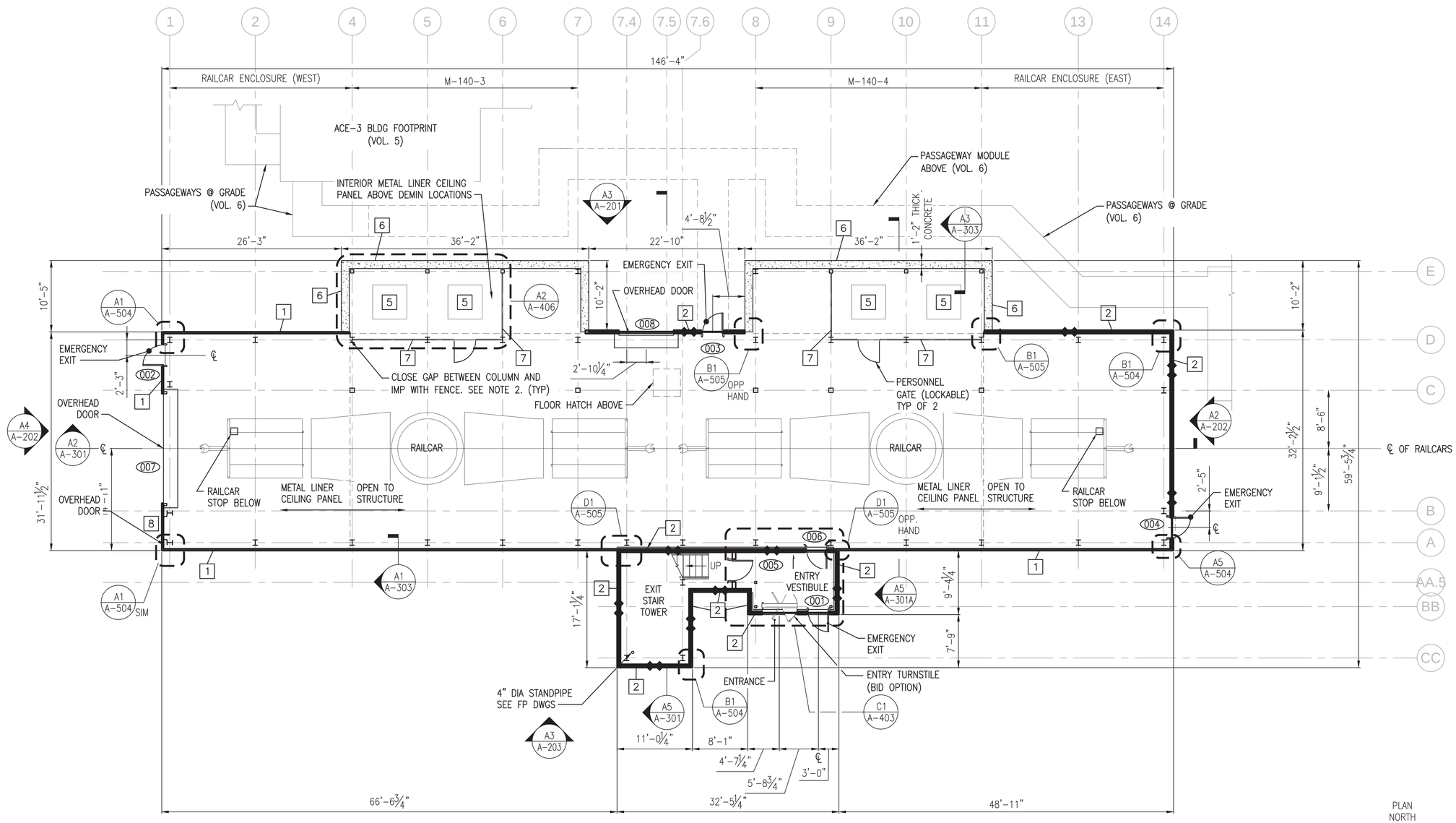

GROUND LEVEL PLAN (NO STORAGE ENCLOSURE)

SCALE: 1/8" = 1'-0"

SYM	DESCRIPTION	DATE	APPR
0	ISSUED FOR CONSTRUCTION	10/28/2016	CBC

NAVFAC

REGISTERED ARCHITECT DONALD M. DYER No. 859 STATE OF MAINE 10/28/16

Colby Company engineering

A/E INFO

APPROVED David W. Trumfield

FOR COMMANDER NAVFAC

ACTIVITY: TIM FISHER, C. 2370.6 BRANCH HEAD

SATISFACTORY TO DATE 10/28/2016

DES GJN DRW GJN CHK DMD

PMDM: PETER STOCKLESS

BRANCH MANAGER: IAN BODWELL

FEAD/PM&E: AMIN BAHROUR

FIRE PROTECTION: PATRICK BAKAJ

DEPARTMENT OF THE NAVY
NAVAL FACILITIES ENGINEERING COMMAND
PUBLIC WORKS DEPARTMENT - MAINE

NAVAL FACILITIES ENGINEERING COMMAND ~ MID-ATLANTIC
NAVAL SHIPYARD - PORTSMOUTH, NH

PORTSMOUTH NAVAL SHIPYARD
KITTERY, ME

DRY DOCK #1 DEFUELING COMPLEX
M-140 COMPLEX

GROUND LEVEL PLAN (NO STORAGE ENCLOSURE)

EPROJECT NO.: 1363311

CONSTR. CONTR. NO. N40085-17-C-5002

NAVFAC DRAWING NO. 12734871

SHEET 88 OF 188

A-100 | DD1-16-952

DRAWFORM REVISION: 10 OCTOBER 2014

10/28/2016 6:42:52 AM X:\297 PORTSMOUTH NAVAL SHIPYARD\297.005.001 - DD#1 DEFUELING COMPLEX DESIGN\DRAWINGS\M140\SHEETS\A-100.DWG

NOTES

1. SEE DRAWING A–001 FOR GENERAL NOTES, ABBREVIATIONS AND LEGEND.
2. OPENINGS IN WIRE MESH PARTITION AND PERSONNEL GATE SHALL BE MINIMIZED. OPENINGS MUST HAVE AT LEAST ONE DIMENSION <6". CHAINLINK FENCE TO GO TO UNDERSIDE OF STRUCTURE ABOVE WITH CUTOUTS AROUND STRUCTURAL MEMBERS AS REQUIRED.
3. INTERIOR METAL LINER CEILING PANEL ABOVE RAILCAR ENCLOSURES, STORAGE ANNEX AND DEMIN AREAS TO FOLLOW AND ADHERE TO STRUCTURAL MEMBERS ABOVE AND ENCAPSULATE PINNED ROCKWOOL INSUL. SEE A–107 FOR ADDITIONAL INFORMATION.

KEYED NOTES

1. 3" INSULATED METAL PANEL
2. 6" INSULATED METAL PANEL, 2HR FIRE RATED
3. 2" INTERIOR STUDLESS WALL PANEL
4. 1/4" STEEL PLATE ROOF, SLOPE (UNLESS STATED OTHERWISE) IN DIRECTION INDICATED
5. DEMINERALIZER (DEMIN) BY PNSY, SEE GA–100 & GA–100A
6. 8'–0" HIGH CONCRETE DEMIN SHIELDING WALL
7. WIRE MESH PARTITION TO UNDERSIDE OF STRUCTURE
8. 6" DIA UTILITY CUTOUT LOCATED 1'–0" ABOVE TOP OF CURB. SEE SHEET DETAIL D2/A–507
9. 5'–0" HIGH TOOL COLUMN PEDESTAL
10. DECK INSERT. SEE A–401 FOR DETAILS
11. 5'–2" HIGH HINGED WALL PANEL, SEE A–401
12. 6" UTILITY CUTOUT FOR CONNECTION BETWEEN DEMIN AND LEVEL 01 – SEE DETAIL A2/A–507
13. APD HOSE CUTOUT (2") – SEE DTL C1/A–507
14. 1/2" LINER PANEL CEILING
15. 1/4" STEEL PLATE WALL PANEL
16. 1/4" STEEL PLATE ROOF WITH NON–SLIP PAINT

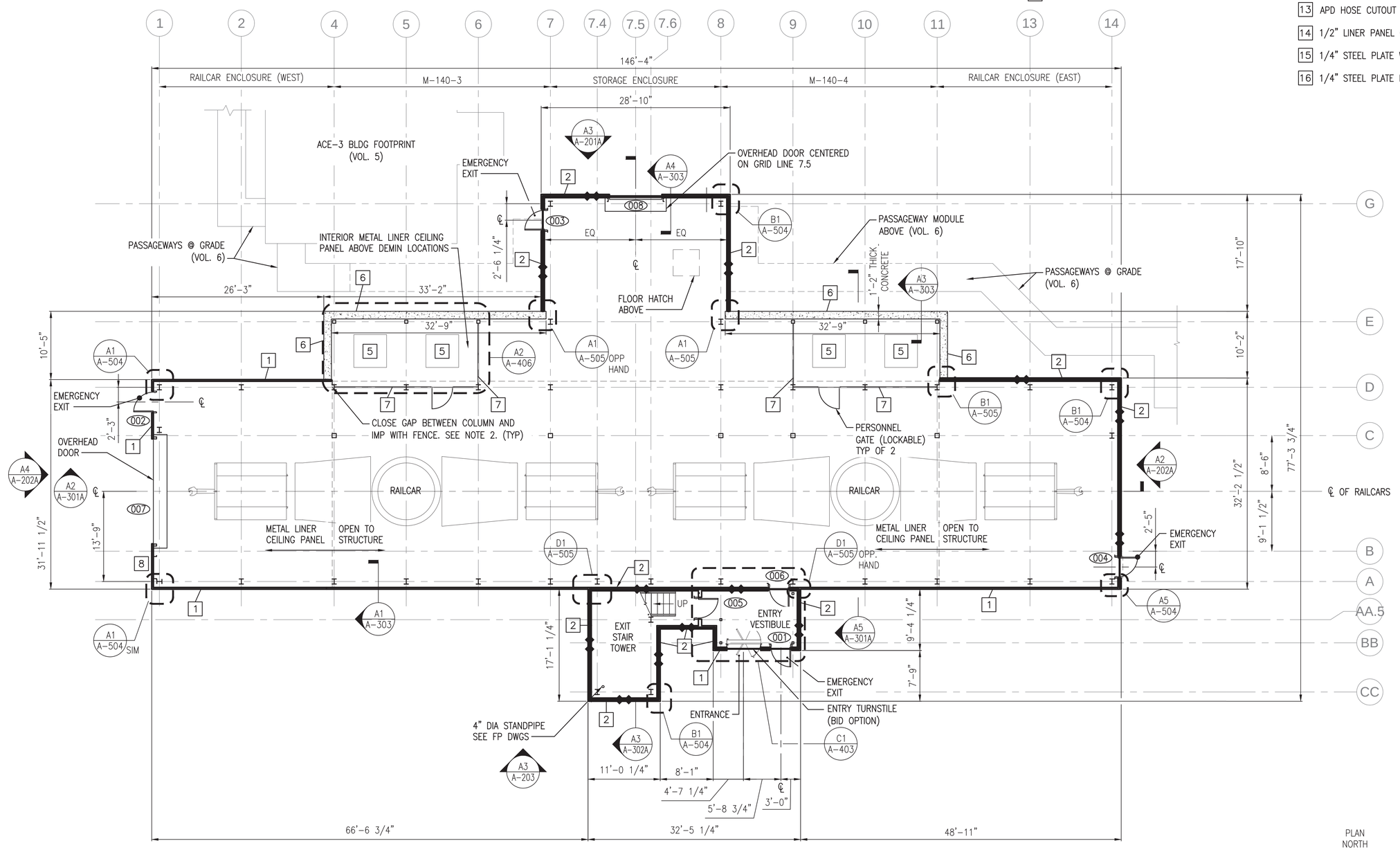

GROUND LEVEL PLAN

SCALE: 1/8"=1'–0"

SYM	DESCRIPTION	DATE	APPR
0	ISSUED FOR CONSTRUCTION	10/28/2016	CBC

NAVFAC

REGISTERED ARCHITECT DONALD M. DYER No. 859 STATE OF MAINE 10/28/16

Colby Company engineering

APPROVED BY: David W. Thumfuld

FOR COMMANDER NAVFAC

ACTIVITY: TIM FISHER C. 2370.6 BRANCH HEAD

SATISFACTORY TO: DATE 10/28/2016

DES GJN DRW GJN CHK DMD

PM/DM: PETER STOCKLESS

BRANCH MANAGER: IAN BODWELL

FEA/DPM&E: AMIN BAHROUR

FIRE PROTECTION: PATRICK BAKAJ

DEPARTMENT OF THE NAVY
NAVAL FACILITIES ENGINEERING COMMAND
PUBLIC WORKS DEPARTMENT - MAINE

NAVAL FACILITIES ENGINEERING COMMAND – MID-ATLANTIC
NAVAL SHIPYARD - PORTSMOUTH, NH

PORTSMOUTH NAVAL SHIPYARD
KITTERY, ME

DRY DOCK #1 DEFUELING COMPLEX
M-140 COMPLEX

GROUND LEVEL PLAN

EPROJECT NO.: 1363311

CONSTR. CONTR. NO. N40085-17-C-5002

NAVFAC DRAWING NO. 12734872

SHEET 89 OF 188

A-100A | DD1-16-953

DRAWFORM REVISION: 10 OCTOBER 2014

10/28/2016 6:42:56 AM X:\297 PORTSMOUTH NAVAL SHIPYARD\297.005.001 - DDH1 DEFUELING COMPLEX DESIGN\DRAWINGS\M140\SHEETS\A-100A.DWG

KEYED NOTES

1. 3" INSULATED METAL PANEL
2. 6" INSULATED METAL PANEL, 2HR FIRE RATED
3. 2" INTERIOR STUDLESS WALL PANEL
4. 1/4" STEEL PLATE ROOF, SLOPE (UNLESS STATED OTHERWISE) IN DIRECTION INDICATED
5. DEMINERALIZER (DEMIN) BY PNSY, SEE GA-100 & GA-100A
6. 8'-0" HIGH CONCRETE DEMIN SHIELDING WALL
7. WIRE MESH PARTITION TO UNDERSIDE OF STRUCTURE
8. 6" DIA UTILITY CUTOUT LOCATED 1'-0" ABOVE TOP OF CURB. SEE SHEET DETAIL D2/A-507
9. 5'-0" HIGH TOOL COLUMN PEDESTAL
10. DECK INSERT. SEE A-401 FOR DETAILS
11. 5'-2" HIGH HINGED WALL PANEL, SEE A-401
12. 6" UTILITY CUTOUT FOR CONNECTION BETWEEN DEMIN AND LEVEL 01 – SEE DETAIL A2/A-507
13. APD HOSE CUTOUT (2") – SEE DTL C1/A-507
14. 1/2" LINER PANEL CEILING
15. 1/4" STEEL PLATE WALL PANEL
16. 1/4" STEEL PLATE ROOF WITH NON-SLIP PAINT

NOTES

1. SEE DRAWING A-001 FOR GENERAL NOTES, ABBREVIATIONS AND LEGEND.
2. DEMIN ROOF HATCHES TO BE OPENED AND LOCKED FROM EXTERIOR SIDE. SEE A-602 FOR FURTHER INFORMATION.
3. SEE A-505 FOR DETAIL INFORMATION ON CONDUIT SLEEVE PENETRATION FROM PASSAGEWAY MODULES TO ENCLOSURE. SEE ELECTRICAL FOR ADDITIONAL INFORMATION.

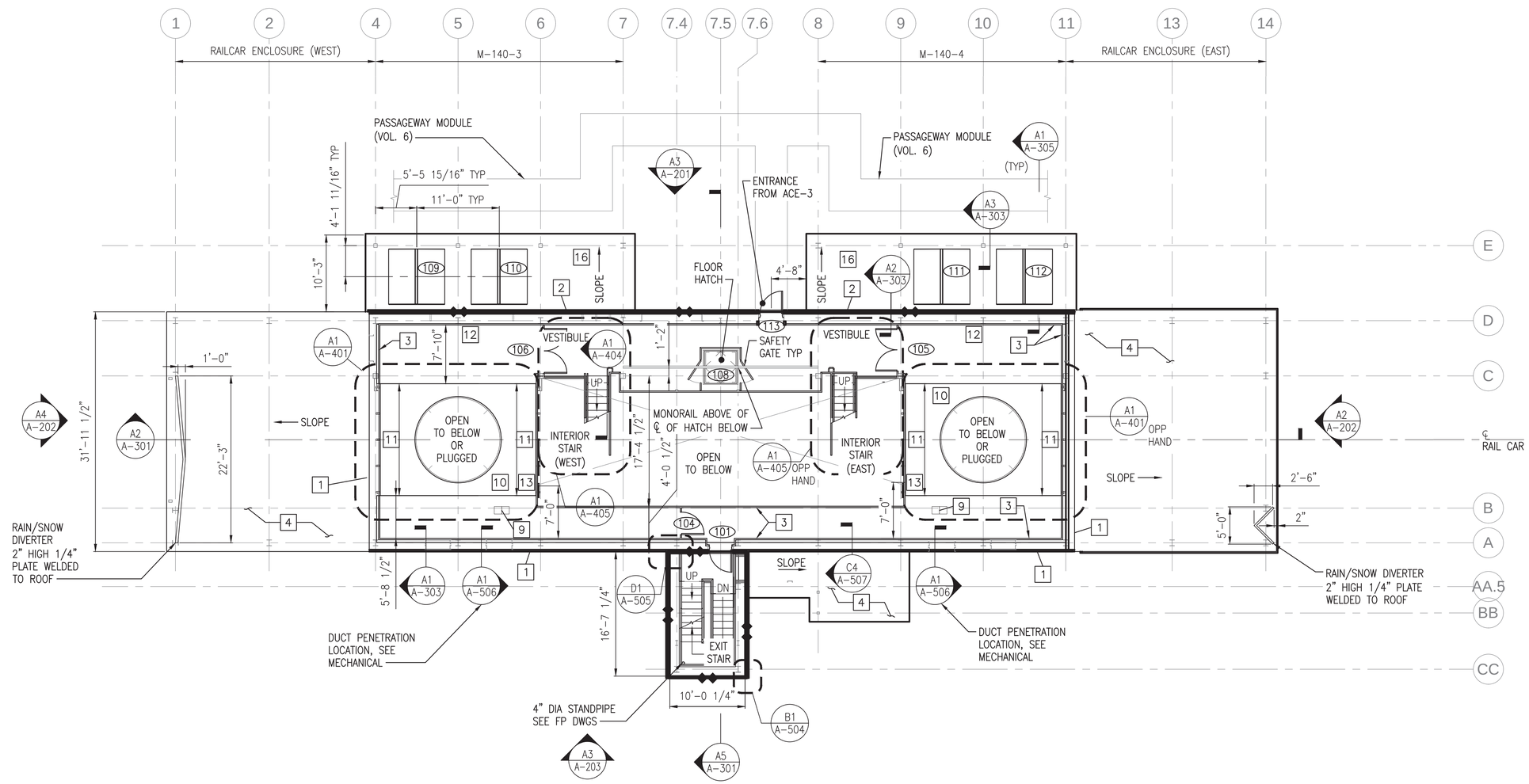

LEVEL 1 PLAN (NO STORAGE ENCLOSURE)

SCALE: 1/8" = 1'-0"

PLAN NORTH

Scale: 1/8" = 1'-0"

SYM	DESCRIPTION	DATE	APPR
0	ISSUED FOR CONSTRUCTION	10/28/2016	CBC

NAVFAC

REGISTERED ARCHITECT DONALD M. DYER No. 859 STATE OF MAINE 10/28/16

Colby Company engineering

A/E INFO

APPROVED David W. Thurnfeld

FOR COMMANDER NAVFAC

ACTIVITY: TIM FISHER C. 2370.6 BRANCH HEAD

SATISFACTORY TO DATE 10/28/2016

DES GJN DRW GJN CHK DMD

PMDM PETER STOCKLESS

BRANCH MANAGER IAN BODWELL

FEAD/PM&E AMIN BAHROUR

FIRE PROTECTION PATRICK BAKAJ

DEPARTMENT OF THE NAVY
NAVAL FACILITIES ENGINEERING COMMAND
PUBLIC WORKS DEPARTMENT - MAINE

NAVAL FACILITIES ENGINEERING COMMAND ~ MID-ATLANTIC
NAVAL SHIPYARD - PORTSMOUTH, NH

PORTSMOUTH NAVAL SHIPYARD
KITTERY, ME

DRY DOCK #1 DEFUELING COMPLEX
M-140 COMPLEX

LEVEL 1 PLAN (NO STORAGE ENCLOSURE)

EPROJECT NO.: 1363311

CONSTR. CONTR. NO. N40085-17-C-5002

NAVFAC DRAWING NO. 12734873

SHEET 90 OF 188

A-101 | DD1-16-954

DRAWFORM REVISION: 10 OCTOBER 2014

10/28/2016 9:30:15 AM X:\297 PORTSMOUTH NAVAL SHIPYARD\297.005.001 - DD#1 DEFUELING COMPLEX DESIGN\DRAWINGS\M140\SHEETS\A-101.DWG

KEYED NOTES

1. 3" INSULATED METAL PANEL
2. 6" INSULATED METAL PANEL, 2HR FIRE RATED
3. 2" INTERIOR STUDLESS WALL PANEL
4. 1/4" STEEL PLATE ROOF, SLOPE (UNLESS STATED OTHERWISE) IN DIRECTION INDICATED
5. DEMINERALIZER (DEMIN) BY PNSY, SEE GA-100 & GA-100A
6. 8'-0" HIGH CONCRETE DEMIN SHIELDING WALL
7. WIRE MESH PARTITION TO UNDERSIDE OF STRUCTURE
8. 6" DIA UTILITY CUTOUT LOCATED 1'-0" ABOVE TOP OF CURB. SEE SHEET DETAIL D2/A-507
9. 5'-0" HIGH TOOL COLUMN PEDESTAL
10. DECK INSERT. SEE A-401 FOR DETAILS
11. 5'-2" HIGH HINGED WALL PANEL, SEE A-401
12. 6" UTILITY CUTOUT FOR CONNECTION BETWEEN DEMIN AND LEVEL 01 – SEE DETAIL A2/A-507
13. APD HOSE CUTOUT (2") – SEE DTL C1/A-507
14. 1/2" LINER PANEL CEILING
15. 1/4" STEEL PLATE WALL PANEL
16. 1/4" STEEL PLATE ROOF WITH NON-SLIP PAINT

NOTES

1. SEE DRAWING A-001 FOR GENERAL NOTES, ABBREVIATIONS AND LEGEND.
2. DEMIN ROOF HATCHES TO BE OPENED AND LOCKED FROM EXTERIOR SIDE. SEE A-602 FOR FURTHER INFORMATION.
3. SEE A-505 FOR DETAIL INFORMATION ON CONDUIT SLEEVE PENETRATION FROM PASSAGEWAY MODULES TO ENCLOSURE. SEE ELECTRICAL FOR ADDITIONAL INFORMATION.
4. SOUTH EXIT STAIR IS TO BE FULLY ENCLOSED BY FIRE RATED BOUNDARY.

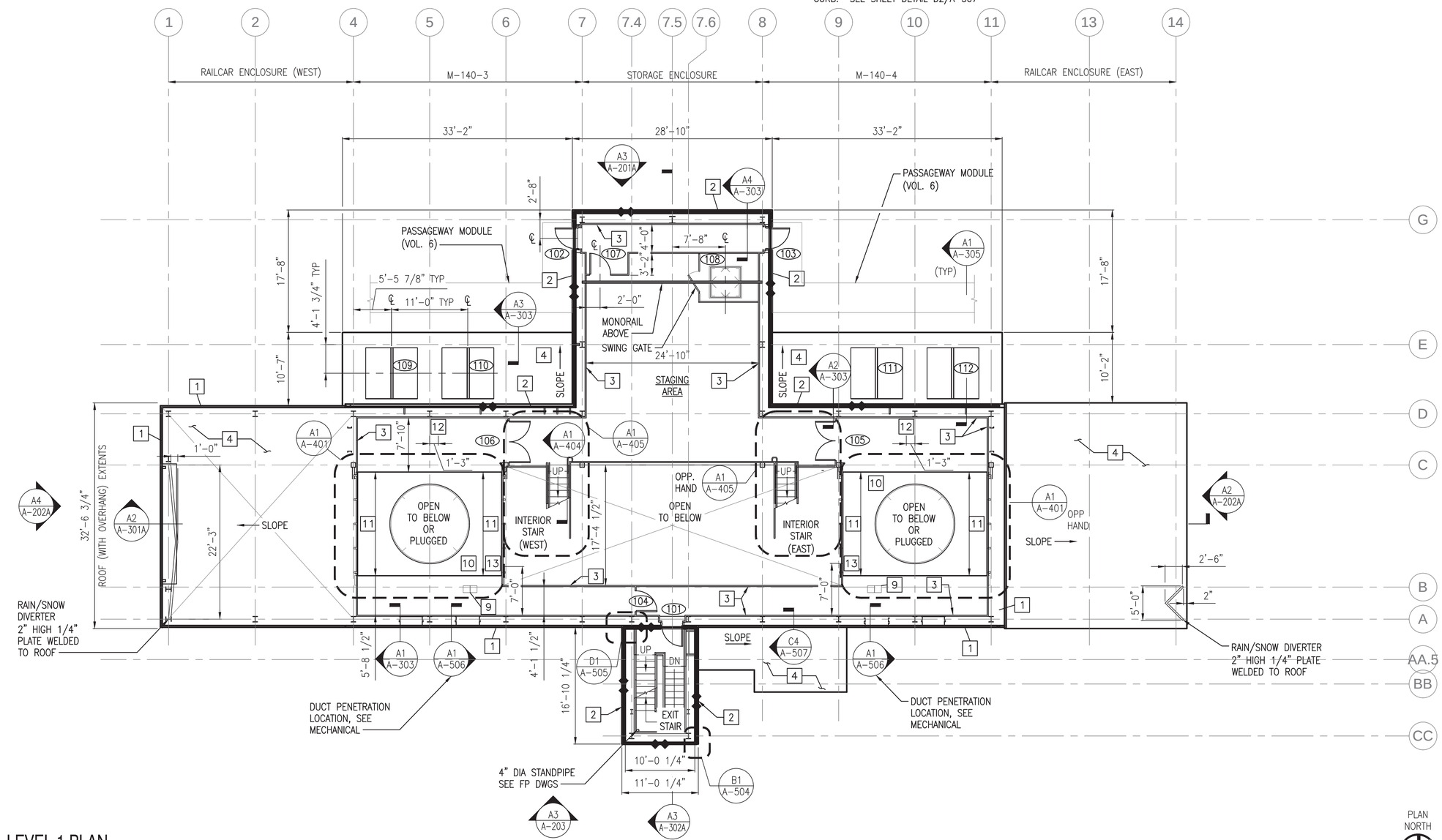

LEVEL 1 PLAN

SCALE: 1/8"=1'-0"

SYM	DESCRIPTION	DATE	APPR
0	ISSUED FOR CONSTRUCTION	10/28/2016	CBC

NAVFAC

REGISTERED ARCHITECT DONALD M. DYER No. 859 STATE OF MAINE 10/28/16

Colby Company engineering

A/E INFO

APPROVED David W. Thurnfield FOR COMMANDER NAVFAC

ACTIVITY TIM FISHER C. 2370.6 BRANCH HEAD

SATISFACTORY TO DATE 10/28/2016

DES GJN DRW GJN CHK DMD

PMDM PETER STOCKLESS

BRANCH MANAGER IAN BODWELL

FEA/DPM&E AMIN BAHROUR

FIRE PROTECTION PATRICK BAKAJ

DEPARTMENT OF THE NAVY
NAVAL FACILITIES ENGINEERING COMMAND
PUBLIC WORKS DEPARTMENT - MAINE

NAVAL FACILITIES ENGINEERING COMMAND ~ MID-ATLANTIC
NAVAL SHIPYARD - PORTSMOUTH, NH

PORTSMOUTH NAVAL SHIPYARD
KITTERY, ME

DRY DOCK #1 DEFUELING COMPLEX
M-140 COMPLEX

LEVEL 1 PLAN

EPROJECT NO.: 1363311

CONSTR. CONTR. NO. N40085-17-C-5002

NAVFAC DRAWING NO. 12734874

SHEET 91 OF 188

A-101A | DD1-16-955

DRAWFORM REVISION: 10 OCTOBER 2014

10/28/2016 6:43:05 AM X:\297 PORTSMOUTH NAVAL SHIPYARD\297.005.001 - DD#1 DEFUELING COMPLEX DESIGN\DRAWINGS\M140\SHEETS\A-101A.DWG

KEYED NOTES

1. 3" INSULATED METAL PANEL
2. 6" INSULATED METAL PANEL, 2HR FIRE RATED
3. 2" INTERIOR STUDLESS WALL PANEL
4. 1/4" STEEL PLATE ROOF, SLOPE (UNLESS STATED OTHERWISE) IN DIRECTION INDICATED
5. DEMINERALIZER (DEMIN) BY PNSY, SEE GA-100 & GA-100A
6. 8'-0" HIGH CONCRETE DEMIN SHIELDING WALL
7. WIRE MESH PARTITION TO UNDERSIDE OF STRUCTURE
8. 6" DIA UTILITY CUTOUT LOCATED 1'-0" ABOVE TOP OF CURB. SEE SHEET DETAIL D2/A-507
9. 5'-0" HIGH TOOL COLUMN PEDESTAL
10. DECK INSERT. SEE A-401 FOR DETAILS
11. 5'-2" HIGH HINGED WALL PANEL, SEE A-401
12. 6" UTILITY CUTOUT FOR CONNECTION BETWEEN DEMIN AND LEVEL 01 – SEE DETAIL A2/A-507
13. APD HOSE CUTOUT (2") – SEE DTL C1/A-507
14. 1/2" LINER PANEL CEILING
15. 1/4" STEEL PLATE WALL PANEL
16. 1/4" STEEL PLATE ROOF WITH NON-SLIP PAINT

NOTES

1. SEE DRAWING A-001 FOR GENERAL NOTES, ABBREVIATIONS AND LEGEND.
2. SOUTH EXIT STAIR IS TO BE FULLY ENCLOSED BY FIRE RATED BOUNDARY.

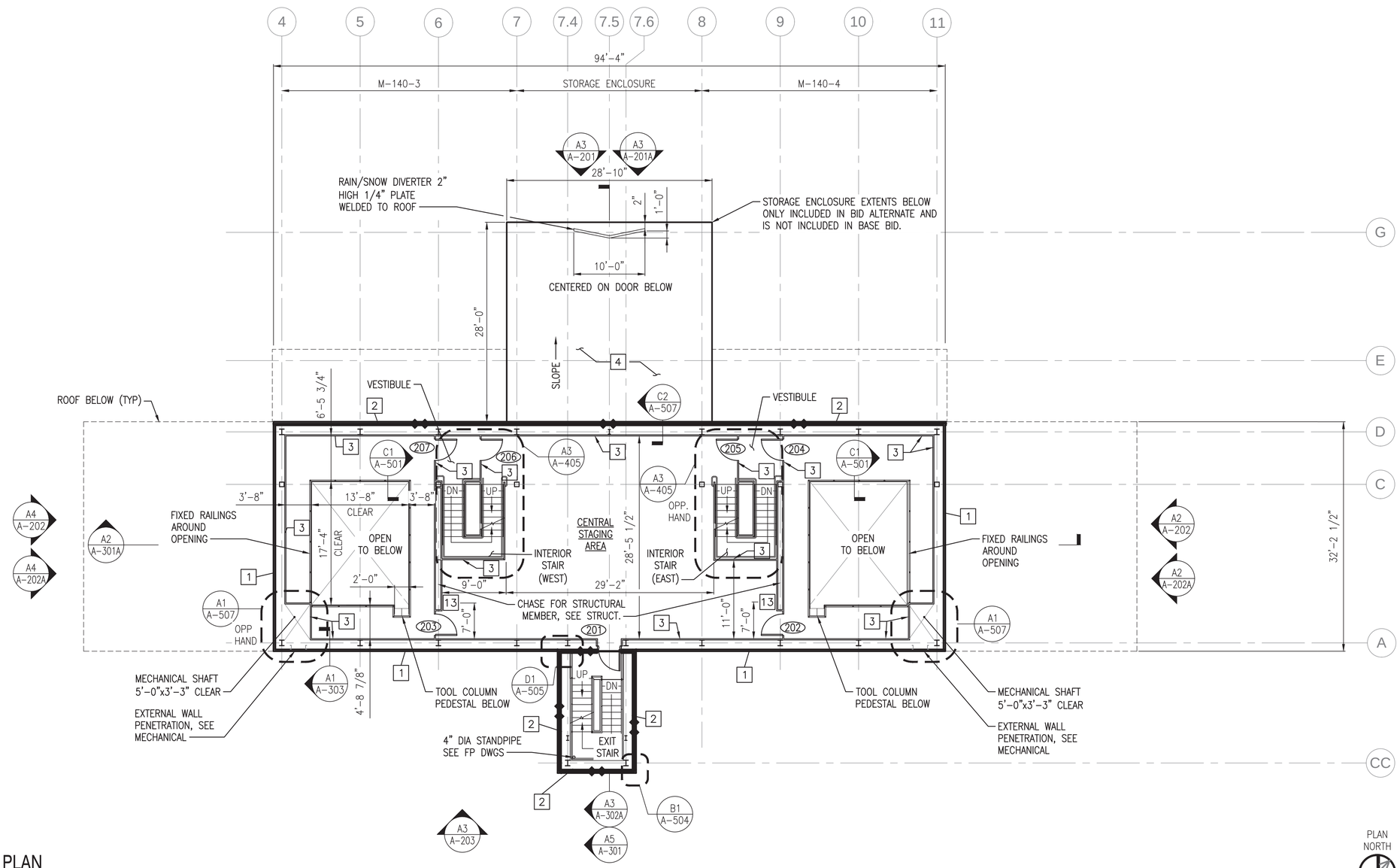

LEVEL 2 PLAN

SCALE: 1/8"=1'-0"

SYM	DESCRIPTION	DATE	APPR
0	ISSUED FOR CONSTRUCTION	10/28/2016	CBC

NAVFAC

REGISTERED ARCHITECT DONALD M. DYER No. 859 STATE OF MAINE 10/28/16

Colby Company engineering

A/E INFO

APPROVED David W. Thurnfeld

FOR COMMANDER NAVFAC

ACTIVITY: TIM FISHER, C. 2370.6 BRANCH HEAD

SATISFACTORY TO DATE 10/28/2016

DES GJN | DRW GJN | CHK DMD

PMDM: PETER STOCKLESS

BRANCH MANAGER: IAN BODWELL

FEAD/PMAE: AMIN BAHROUR

FIRE PROTECTION: PATRICK BAKAJ

DEPARTMENT OF THE NAVY
NAVAL FACILITIES ENGINEERING COMMAND ~ MID-ATLANTIC
PUBLIC WORKS DEPARTMENT - MAINE

NAVAL FACILITIES ENGINEERING COMMAND
NAVAL SHIPYARD - PORTSMOUTH, NH

PORTSMOUTH NAVAL SHIPYARD
DRY DOCK #1 DEFUELING COMPLEX
M-140 COMPLEX
KITTERY, ME

LEVEL 2 PLAN

EPROJECT NO.: 1363311

CONSTR. CONTR. NO.: N40085-17-C-5002

NAVFAC DRAWING NO.: 12734875

SHEET 92 OF 188

A-102 | DD1-16-956

DRAWFORM REVISION: 10 OCTOBER 2014

10/28/2016 6:43:09 AM X:\297 PORTSMOUTH NAVAL SHIPYARD\297.005.001 - DD#1 DEFUELING COMPLEX DESIGN\DRAWINGS\M140\SHEETS\A-102.DWG

KEYED NOTES

1. 3" INSULATED METAL PANEL
2. 6" INSULATED METAL PANEL, 2HR FIRE RATED
3. 2" INTERIOR STUDLESS WALL PANEL
4. 1/4" STEEL PLATE ROOF, SLOPE (UNLESS STATED OTHERWISE) IN DIRECTION INDICATED
5. DEMINERALIZER (DEMIN) BY PNSY, SEE GA-100 & GA-100A
6. 8'-0" HIGH CONCRETE DEMIN SHIELDING WALL
7. WIRE MESH PARTITION TO UNDERSIDE OF STRUCTURE
8. 6" DIA UTILITY CUTOUT LOCATED 1'-0" ABOVE TOP OF CURB. SEE SHEET DETAIL D2/A-507
9. 5'-0" HIGH TOOL COLUMN PEDESTAL
10. DECK INSERT. SEE A-401 FOR DETAILS
11. 5'-2" HIGH HINGED WALL PANEL, SEE A-401
12. 6" UTILITY CUTOUT FOR CONNECTION BETWEEN DEMIN AND LEVEL 01 – SEE DETAIL A2/A-507
13. APD HOSE CUTOUT (2") – SEE DTL C1/A-507
14. 1/2" LINER PANEL CEILING
15. 1/4" STEEL PLATE WALL PANEL
16. 1/4" STEEL PLATE ROOF WITH NON-SLIP PAINT

NOTES

1. SEE DRAWING A-001 FOR GENERAL NOTES, ABBREVIATIONS AND LEGEND.
2. SOUTH EXIT STAIR IS TO BE FULLY ENCLOSED BY FIRE RATED BOUNDARY.

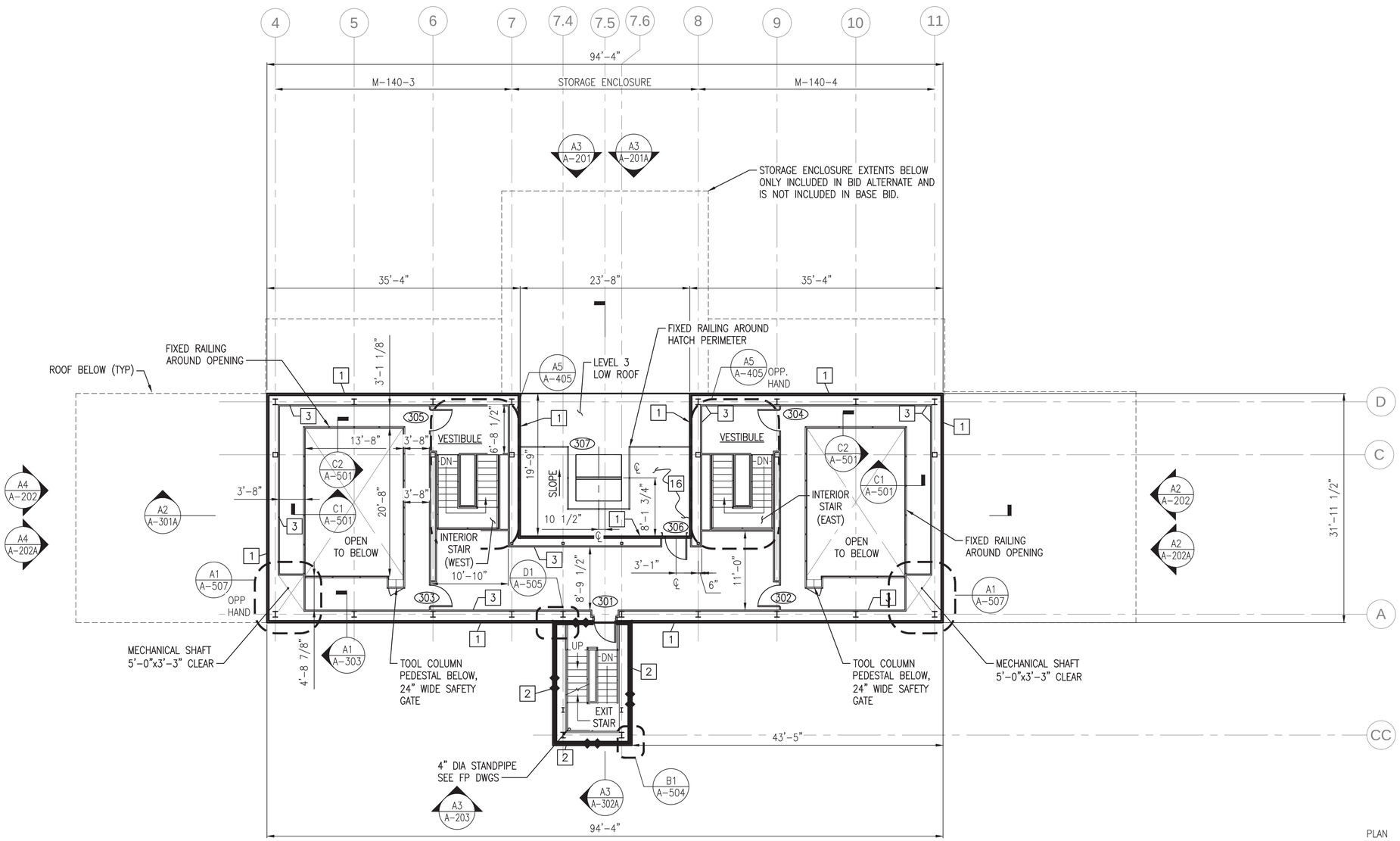

LEVEL 3 PLAN

SCALE: 1/8"=1'-0"

SYM	DESCRIPTION	DATE	APPR
0	ISSUED FOR CONSTRUCTION	10/28/2016	CBC

NAVFAC

REGISTERED ARCHITECT DONALD M. DYER No. 859 STATE OF MAINE 10/28/16

Colby Company engineering

A/E INFO

APPROVED David W. Thurnfield
FOR COMMANDER NAVFAC

ACTIVITY: TIM FISHER, C. 2370.6 BRANCH HEAD

SATISFACTORY TO DATE 10/28/2016

DES GJN | DRW GJN | CHK DMD

PMDM: PETER STOCKLESS
BRANCH MANAGER: IAN BODWELL
FEA/PM&E: AMIN BAHROUR
FIRE PROTECTION: PATRICK BAKAJ

DEPARTMENT OF THE NAVY
NAVAL FACILITIES ENGINEERING COMMAND
PUBLIC WORKS DEPARTMENT - MAINE

NAVAL FACILITIES ENGINEERING COMMAND ~ MID-ATLANTIC
NAVAL SHIPYARD - PORTSMOUTH, NH

PORTSMOUTH NAVAL SHIPYARD
KITTERY, ME

DRY DOCK #1 DEFUELING COMPLEX
M-140 COMPLEX

LEVEL 3 PLAN

EPROJECT NO.: 1363311

CONSTR. CONTR. NO. N40085-17-C-5002

NAVFAC DRAWING NO. 12734876

SHEET 93 OF 188

A-103 | DD1-16-957

Scale: 1/8" = 1'-0"

DRAWFORM REVISION: 10 OCTOBER 2014

10/28/2016 6:43:13 AM X:\297 PORTSMOUTH NAVAL SHIPYARD\297.005.001 - DD#1 DEFUELING COMPLEX DESIGN\DRAWINGS\M140\SHEETS\A-103.DWG

KEYED NOTES

1. 3" INSULATED METAL PANEL
2. 6" INSULATED METAL PANEL, 2HR FIRE RATED
3. 2" INTERIOR STUDLESS WALL PANEL
4. 1/4" STEEL PLATE ROOF, SLOPE (UNLESS STATED OTHERWISE) IN DIRECTION INDICATED
5. DEMINERALIZER (DEMIN) BY PNSY, SEE GA-100 & GA-100A
6. 8'-0" HIGH CONCRETE DEMIN SHIELDING WALL
7. WIRE MESH PARTITION TO UNDERSIDE OF STRUCTURE
8. 6" DIA UTILITY CUTOUT LOCATED 1'-0" ABOVE TOP OF CURB. SEE SHEET DETAIL D2/A-507
9. 5'-0" HIGH TOOL COLUMN PEDESTAL
10. DECK INSERT. SEE A-401 FOR DETAILS
11. 5'-2" HIGH HINGED WALL PANEL, SEE A-401
12. 6" UTILITY CUTOUT FOR CONNECTION BETWEEN DEMIN AND LEVEL 01 – SEE DETAIL A2/A-507
13. APD HOSE CUTOUT (2") – SEE DTL C1/A-507
14. 1/2" LINER PANEL CEILING
15. 1/4" STEEL PLATE WALL PANEL
16. 1/4" STEEL PLATE ROOF WITH NON-SLIP PAINT

NOTES

1. SEE DRAWING A-001 FOR GENERAL NOTES, ABBREVIATIONS AND LEGEND.
2. SOUTH EXIT STAIR IS TO BE FULLY ENCLOSED BY FIRE RATED BOUNDARY.

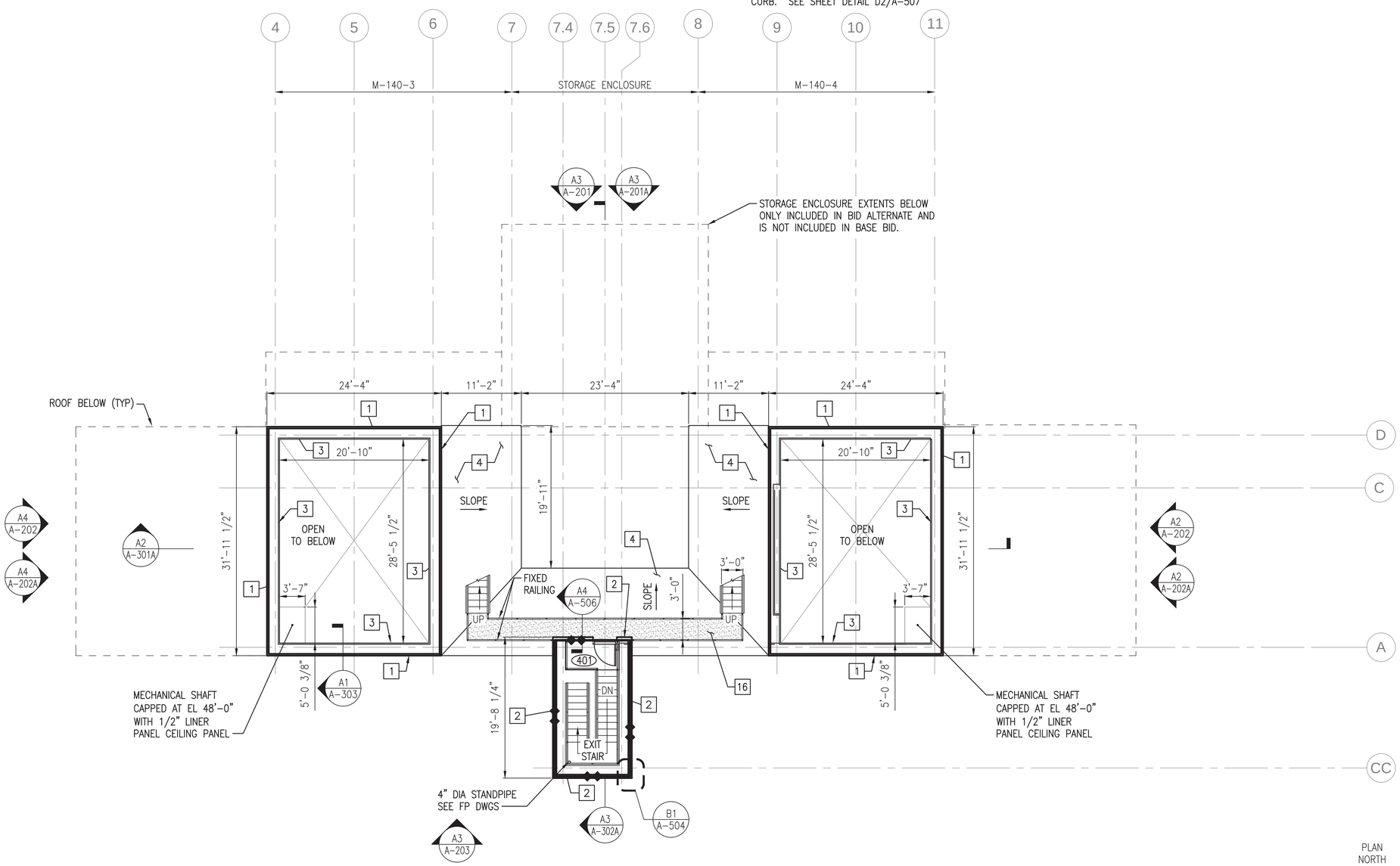

LEVEL 4 PLAN

SCALE: 1/8"=1'-0"

PLAN NORTH

0 4' 8' 16'
Scale: 1/8" = 1'-0"

SYM	DESCRIPTION	DATE	APPR
0	ISSUED FOR CONSTRUCTION	10/28/2016	CBC

NAVFAC

REGISTERED ARCHITECT DONALD M. DYER No. 859 STATE OF MAINE
10/28/16

Colby Company engineering
A/E INFO

APPROVED: David W. Thumfold
FOR COMMANDER NAVFAC

ACTIVITY: TIM FISHER C. 2370.6 BRANCH HEAD

SATISFACTORY TO DATE 10/28/2016
DES GJN DRW GJN CHK DMD
PMDM PETER STOCKLESS
BRANCH MANAGER IAN BODWELL
FEAD/PM&E AMIN BAHROUR
FIRE PROTECTION PATRICK BAKAJ

DEPARTMENT OF THE NAVY
NAVAL FACILITIES ENGINEERING COMMAND
PUBLIC WORKS DEPARTMENT - MAINE

NAVAL FACILITIES ENGINEERING COMMAND ~ MID-ATLANTIC
NAVAL SHIPYARD - PORTSMOUTH, NH

PORTSMOUTH NAVAL SHIPYARD
KITTERY, ME

DRY DOCK #1 DEFUELING COMPLEX
M-140 COMPLEX

LEVEL 4 PLAN

EPROJECT NO.: 1363311
CONSTR. CONTR. NO. N40085-17-C-5002
NAVFAC DRAWING NO. 12734877
SHEET 94 OF 188

A-104 | DD1-16-958

DRAWFORM REVISION: 10 OCTOBER 2014

10/28/2016 6:43:17 AM X:\297 PORTSMOUTH NAVAL SHIPYARD\297.005.001 - DD#1 DEFUELING COMPLEX DESIGN\DRAWINGS\M140\SHEETS\A-104.DWG

KEYED NOTES

1. 3" INSULATED METAL PANEL
2. 6" INSULATED METAL PANEL, 2HR FIRE RATED
3. 2" INTERIOR STUDLESS WALL PANEL
4. 1/4" STEEL PLATE ROOF, SLOPE (UNLESS STATED OTHERWISE) IN DIRECTION INDICATED
5. DEMINERALIZER (DEMIN) BY PNSY, SEE GA-100 & GA-100A
6. 8'-0" HIGH CONCRETE DEMIN SHIELDING WALL
7. WIRE MESH PARTITION TO UNDERSIDE OF STRUCTURE
8. 6" DIA UTILITY CUTOUT LOCATED 1'-0" ABOVE TOP OF CURB. SEE SHEET DETAIL D2/A-507
9. 5'-0" HIGH TOOL COLUMN PEDESTAL
10. DECK INSERT. SEE A-401 FOR DETAILS
11. 5'-2" HIGH HINGED WALL PANEL, SEE A-401
12. 6" UTILITY CUTOUT FOR CONNECTION BETWEEN DEMIN AND LEVEL 01 – SEE DETAIL A2/A-507
13. APD HOSE CUTOUT (2") – SEE DTL C1/A-507
14. 1/2" LINER PANEL CEILING
15. 1/4" STEEL PLATE WALL PANEL
16. 1/4" STEEL PLATE ROOF WITH NON-SLIP PAINT

NOTES

1. SEE DRAWING A-001 FOR GENERAL NOTES, ABBREVIATIONS AND LEGEND.
2. ANY AND ALL CRANE INFORMATION IS FOR INFORMATIONAL PURPOSES ONLY. DETAILS TO BE PROVIDED BY CRANE MANUFACTURER AND IS IN NO WAY SHOWN TO PORTRAY THE CRANE TO BE DESIGNED AS PART OF THIS PROJECT.

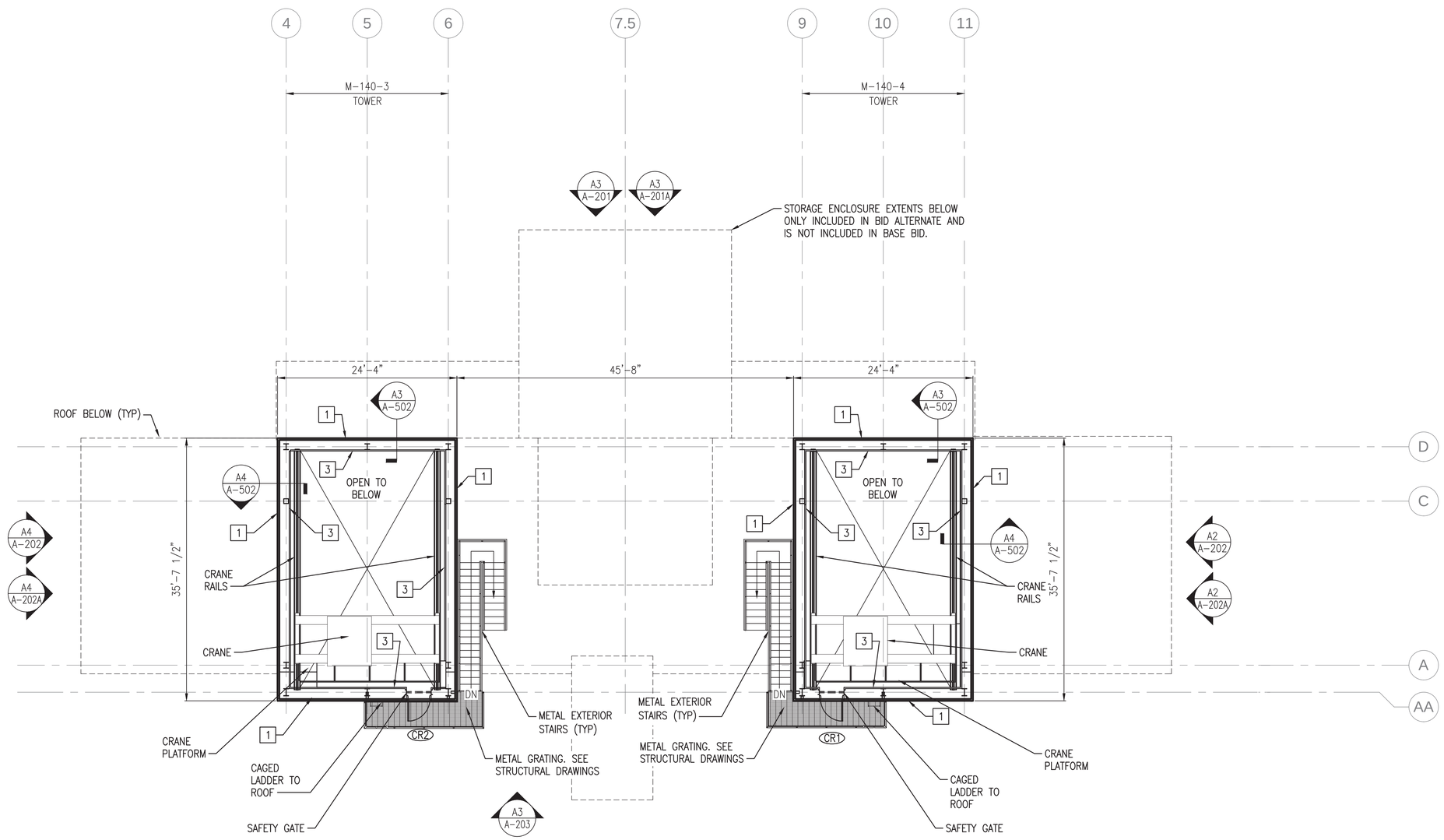

CRANE LEVEL

SCALE: 1/8"=1'-0"

PLAN NORTH

Scale: 1/8" = 1'-0"

SYM	DESCRIPTION	DATE	APPR
0	ISSUED FOR CONSTRUCTION	10/28/2016	CBC

REGISTERED ARCHITECT DONALD M. DYER No. 859 STATE OF MAINE 10/28/16

Colby Company engineering

A/E INFO

APPROVED David W. Thurnfield

FOR COMMANDER NAVFAC

ACTIVITY: TIM FISHER C. 2370.6 BRANCH HEAD

SATISFACTORY TO DATE 10/28/2016

DES GJN DRW GJN CHK DMD

PMDM PETER STOCKLESS

BRANCH MANAGER IAN BODWELL

FEA/PM&E AMIN BAHROUR

FIRE PROTECTION PATRICK BAKAJ

DEPARTMENT OF THE NAVY
NAVAL FACILITIES ENGINEERING COMMAND
PUBLIC WORKS DEPARTMENT - MAINE

NAVAL FACILITIES ENGINEERING COMMAND ~ MID-ATLANTIC
NAVAL SHIPYARD - PORTSMOUTH, NH

PORTSMOUTH NAVAL SHIPYARD
KITTERY, ME

DRY DOCK #1 DEFUELING COMPLEX
M-140 COMPLEX

CRANE LEVEL

EPROJECT NO.: 1363311

CONSTR. CONTR. NO. N40085-17-C-5002

NAVFAC DRAWING NO. 12734878

SHEET 95 OF 188

A-105 | DD1-16-959

DRAWFORM REVISION: 10 OCTOBER 2014

10/28/2016 6:43:21 AM X:\297 PORTSMOUTH NAVAL SHIPYARD\297.005.001 - DD#1 DEFUELING COMPLEX DESIGN\DRAWINGS\M140\SHEETS\A-105.DWG

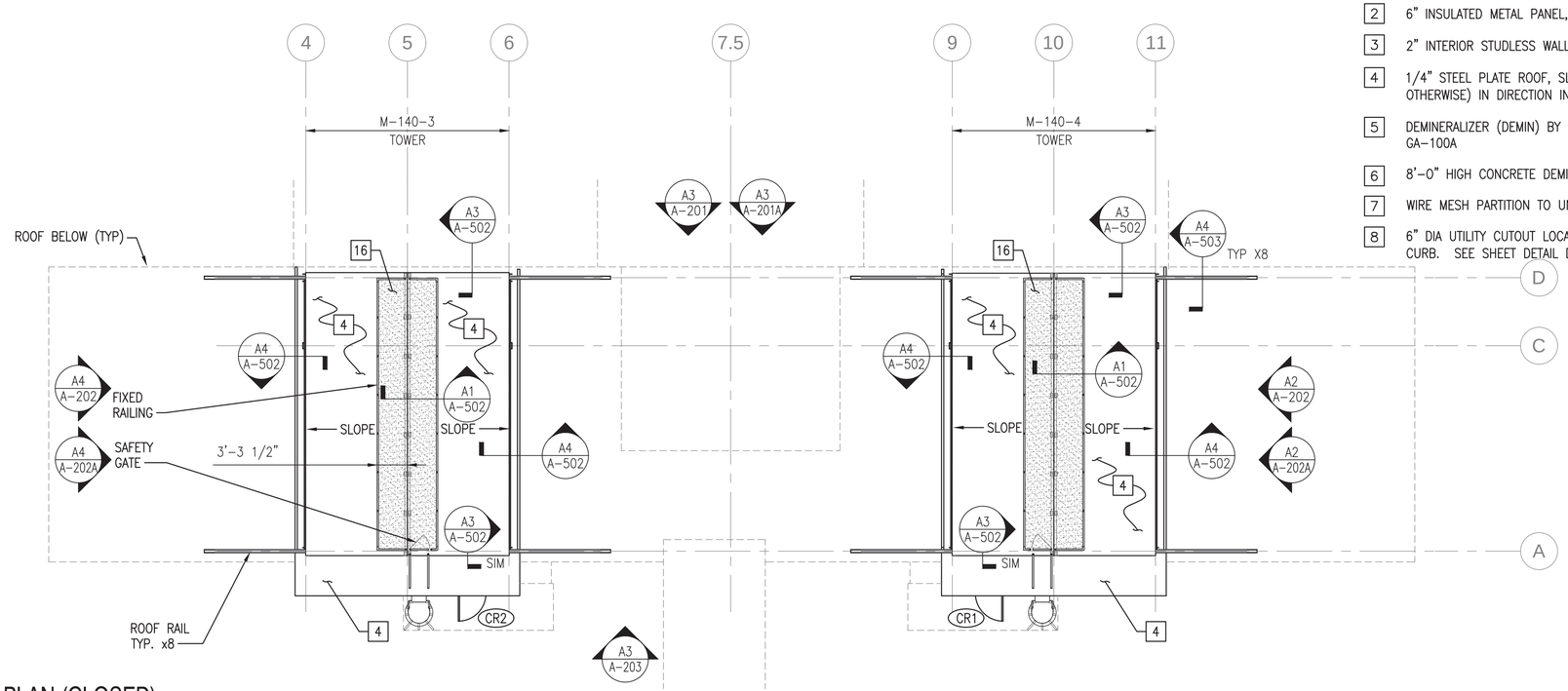

ROOF PLAN (CLOSED)

SCALE: 1/8"=1'-0"

PLAN NORTH

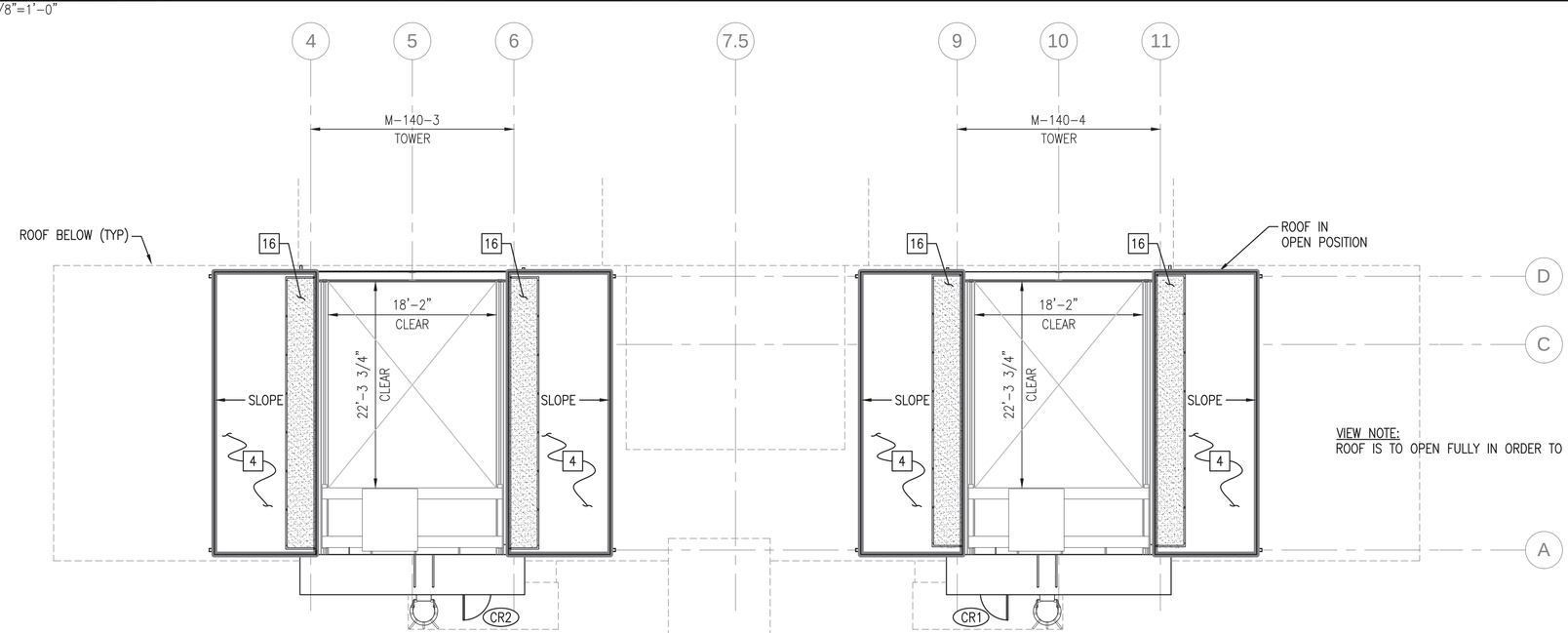

VIEW NOTE:
ROOF IS TO OPEN FULLY IN ORDER TO ALLOW CLEARANCES SHOWN.

ROOF PLAN (OPEN)

SCALE: 1/8"=1'-0"

PLAN NORTH

0 4' 8' 16'
Scale: 1/8" = 1'-0"

KEYED NOTES

1. 3" INSULATED METAL PANEL
2. 6" INSULATED METAL PANEL, 2HR FIRE RATED
3. 2" INTERIOR STUDLESS WALL PANEL
4. 1/4" STEEL PLATE ROOF, SLOPE (UNLESS STATED OTHERWISE) IN DIRECTION INDICATED
5. DEMINERALIZER (DEMIN) BY PNSY, SEE GA-100 & GA-100A
6. 8'-0" HIGH CONCRETE DEMIN SHIELDING WALL
7. WIRE MESH PARTITION TO UNDERSIDE OF STRUCTURE
8. 6" DIA UTILITY CUTOUT LOCATED 1'-0" ABOVE TOP OF CURB. SEE SHEET DETAIL D2/A-507
9. 5'-0" HIGH TOOL COLUMN PEDESTAL
10. DECK INSERT. SEE A-401 FOR DETAILS
11. 5'-2" HIGH HINGED WALL PANEL, SEE A-401
12. 6" UTILITY CUTOUT FOR CONNECTION BETWEEN DEMIN AND LEVEL 01 – SEE DETAIL A2/A-507
13. APD HOSE CUTOUT (2") – SEE DTL C1/A-507
14. 1/2" LINER PANEL CEILING
15. 1/4" STEEL PLATE WALL PANEL
16. 1/4" STEEL PLATE ROOF WITH NON-SLIP PAINT

NOTES

1. SEE DRAWING A-001 FOR GENERAL NOTES, ABBREVIATIONS AND LEGEND.

SYM	DESCRIPTION	DATE	APPR
0	ISSUED FOR CONSTRUCTION	10/28/2016	CBC

NAVFAC

REGISTERED ARCHITECT
DONALD M. DYER
No. 859
STATE OF MAINE
10/28/16

Colby Company engineering

A/E INFO

APPROVED
David W. Trumfield
FOR COMMANDER NAVFAC

ACTIVITY
TIM FISHER
C. 2370.6 BRANCH HEAD

SATISFACTORY TO DATE 10/28/2016
DES GJN DRW GJN CHK DMD
PMDM PETER STOCKLESS
BRANCH MANAGER IAN BODWELL
FEAD/PM&E AMIN BAHROUR
FIRE PROTECTION PATRICK BAKAJ

DEPARTMENT OF THE NAVY
NAVAL FACILITIES ENGINEERING COMMAND ~ MID-ATLANTIC
PUBLIC WORKS DEPARTMENT - MAINE
NAVAL FACILITIES ENGINEERING COMMAND
NAVAL SHIPYARD - PORTSMOUTH, NH
PORTSMOUTH NAVAL SHIPYARD
KITTERY, ME
DRY DOCK #1 DEFUELING COMPLEX
M-140 COMPLEX
ROOF PLAN

EPROJECT NO.: 1363311
CONSTR. CONTR. NO. N40085-17-C-5002
NAVFAC DRAWING NO. 12734879
SHEET 96 OF 188
A-106 DD1-16-960

DRAWFORM REVISION: 10 OCTOBER 2014

10/28/2016 6:43:26 AM X:\297 PORTSMOUTH NAVAL SHIPYARD\297.005.001 - DD#1 DEFUELING COMPLEX DESIGN\DRAWINGS\M140\SHEETS\A-106.DWG

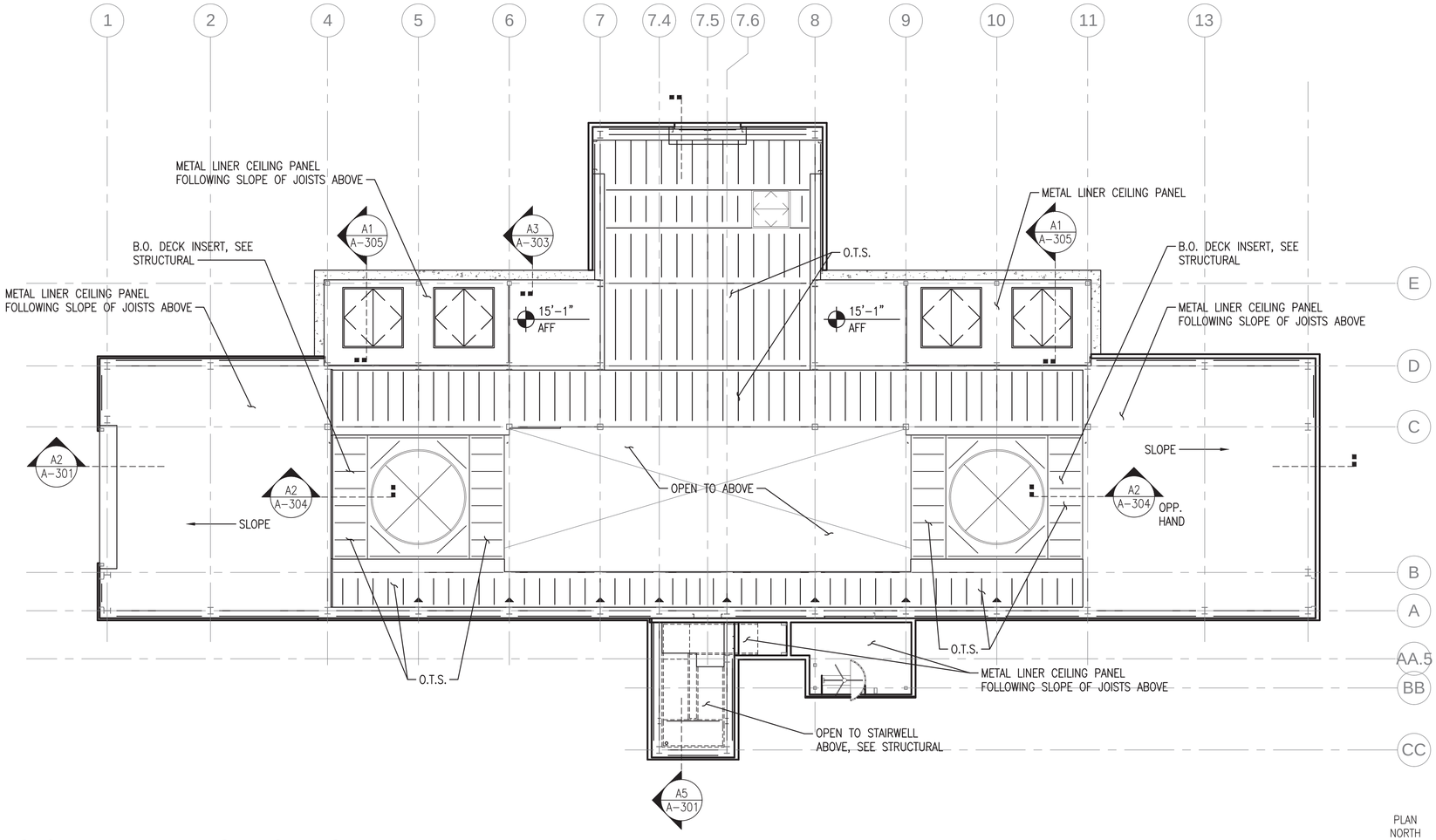

GROUND LEVEL REFLECTED CEILING PLAN

SCALE: 1/8" = 1'-0"

NOTES:

1. SEE DRAWING A-001 FOR GENERAL NOTES, ABBREVIATIONS AND LEGEND.
2. ALL CEILING MATERIAL ON GROUND LEVEL TO CONSIST OF INTERIOR METAL LINER CEILING PANEL (MLCP), SEE SPECIFICATION 074213 FOR ADDITIONAL INFORMATION.
3. MLCP TO ONLY BE INSTALLED ON GROUND LEVEL OVER RAILCAR ENCLOSURES, DEMIN PIT AREAS AND VESTIBULE AREA (UP TO STAIRWELL ENCLOSURE), FOR THESE ARE ONLY PORTIONS OF GROUND LEVEL WHERE 1/4" MTL. PLATE ROOF FACES EXTERIOR WHICH HAS PINNED ROCKWOOL INSULATION TO THE UNDERSIDE OF ROOF.
4. MLCP TO BE FLUSH TO ALL ADJACENT SURACES AND BE CONT SEALED AND HEMMED AS DIRECTED BY SPECIFICATIONS.

SYM	DESCRIPTION	DATE	APPR
0	ISSUED FOR CONSTRUCTION	10/28/2016	CBC

NAVFAC

REGISTERED ARCHITECT DONALD M. DYER No. 859 STATE OF MAINE 10/28/16

Colby Company engineering

A/E INFO

APPROVED David W. Thurnfield FOR COMMANDER NAVFAC

ACTIVITY TIM FISHER C. 2370.6 BRANCH HEAD

SATISFACTORY TO DATE 10/28/2016

DES RLM DRW CD CHK DRV

PMDM PETER STOCKLESS

BRANCH MANAGER IAN BODWELL

FEA/DPM&E AMIN BAHROUR

FIRE PROTECTION PATRICK BAKAJ

DEPARTMENT OF THE NAVY
NAVAL FACILITIES ENGINEERING COMMAND
PUBLIC WORKS DEPARTMENT - MAINE

NAVAL FACILITIES ENGINEERING COMMAND ~ MID-ATLANTIC
NAVAL SHIPYARD - PORTSMOUTH, NH

PORTSMOUTH NAVAL SHIPYARD
KITTERY, ME

DRY DOCK #1 DEFUELING COMPLEX
M-140 COMPLEX

GROUND LEVEL REFLECTED CEILING PLAN

EPROJECT NO.: 1363311

CONSTR. CONTR. NO. N40085-17-C-5002

NAVFAC DRAWING NO. 12734880

SHEET 97 OF 188

A-107 | DD1-16-961

DRAWFORM REVISION: 10 OCTOBER 2014

0 4' 8' 16'
Scale: 1/8" = 1'-0"

10/28/2016 6:43:31 AM X:\297 PORTSMOUTH NAVAL SHIPYARD\297.005.001 - DD#1 DEFUELING COMPLEX DESIGN\DRAWINGS\M140\SHEETS\A-107.DWG

NOTES:

1. SEE DRAWING A-001 FOR GENERAL NOTES, ABBREVIATIONS AND LEGEND.
2. ALL CEILING PLANES ON LEVEL 01 AND ABOVE ARE TO CONSIST 1/2" METAL LINER PANEL. SEE SPECIFICATION SECTION 097300 FOR ADDITIONAL INFORMATION.
3. COORDINATE 1/2" LINER PANEL CEILING SEAMS, SUPPORTS AND PENETRATIONS WITH MECHANICAL.

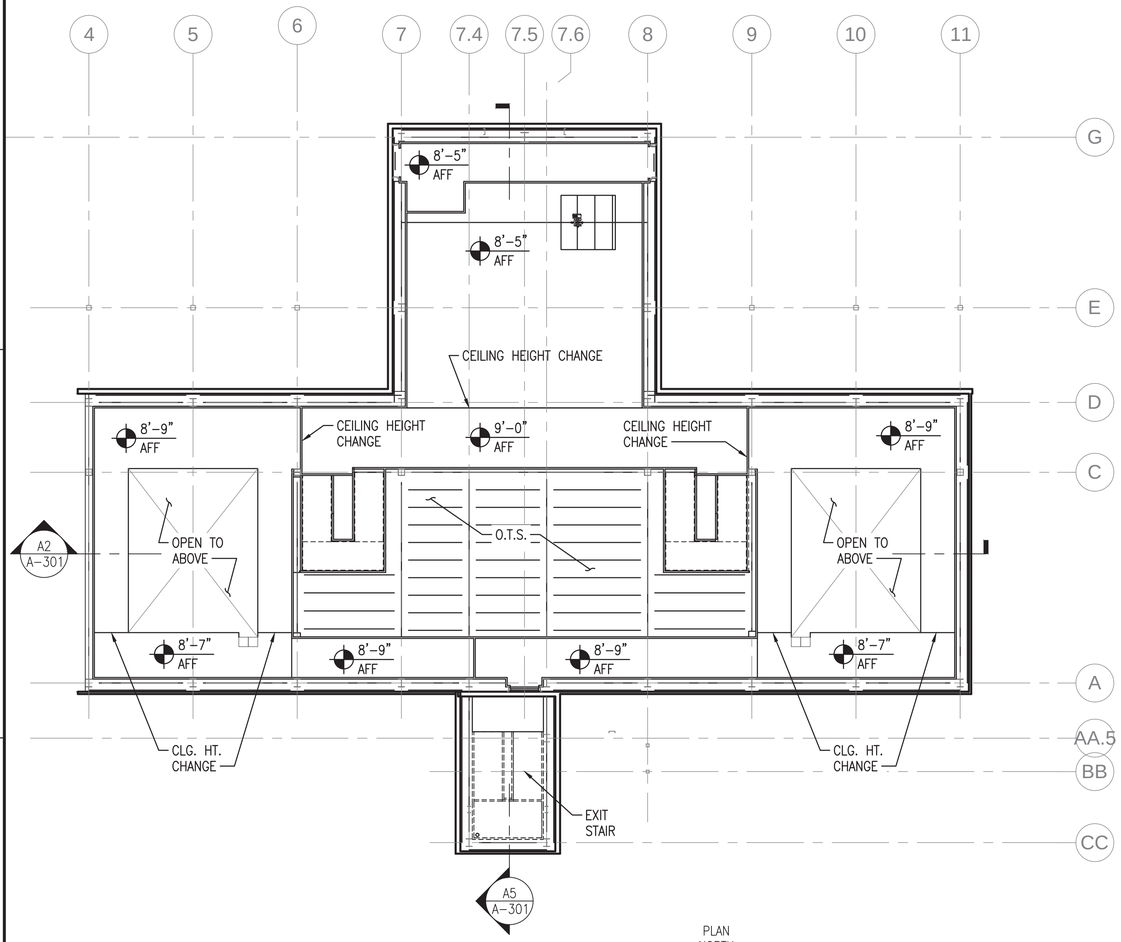

LEVEL 1 REFLECTED CEILING PLAN
SCALE: 1/8" = 1'-0"

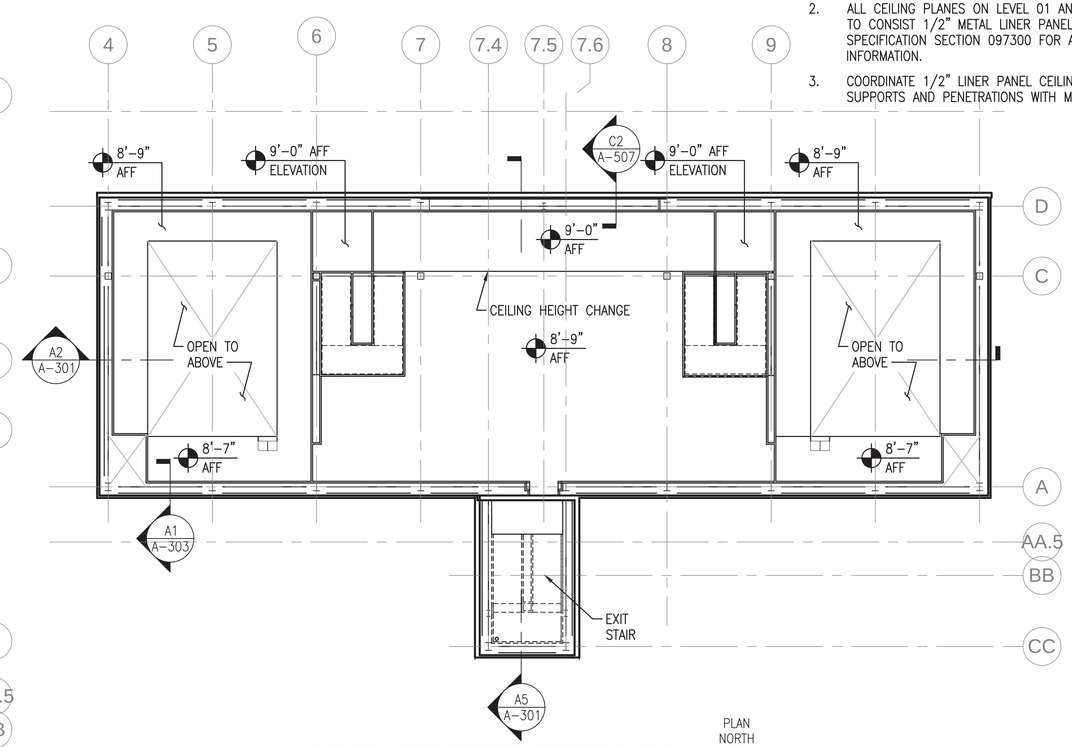

LEVEL 2 REFLECTED CEILING PLAN
SCALE: 1/8" = 1'-0"

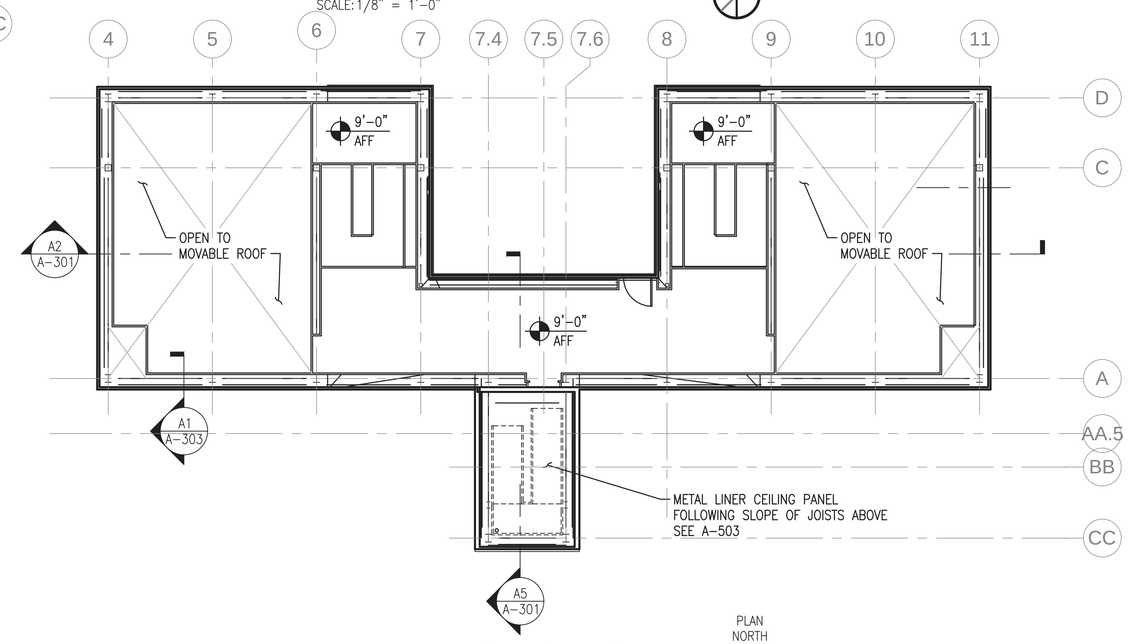

LEVEL 3 REFLECTED CEILING PLAN
SCALE: 1/8" = 1'-0"

0 4' 8' 16'
Scale: 1/8" = 1'-0"

SYM	DESCRIPTION	DATE	APPR
0	ISSUED FOR CONSTRUCTION	10/28/2016	CBC

NAVFAC

REGISTERED ARCHITECT DONALD M. DYER No. 859 STATE OF MAINE 10/28/16

Colby Company engineering

A/E INFO

APPROVED: David W. Thumfuld
FOR COMMANDER NAVFAC
ACTIVITY: TIM FISHER, C. 2370.6 BRANCH HEAD
SATISFACTORY TO DATE 10/28/2016
DES RLM DRW CD CHK DRV
PM/DM PETER STOCKLESS
BRANCH MANAGER IAN BODWELL
FEAD/PM&E AMIN BAHROUR
FIRE PROTECTION PATRICK BAKAJ

DEPARTMENT OF THE NAVY
NAVAL FACILITIES ENGINEERING COMMAND ~ MID-ATLANTIC
PUBLIC WORKS DEPARTMENT - MAINE
NAVAL FACILITIES ENGINEERING COMMAND
NAVAL SHIPYARD - PORTSMOUTH, NH
PORTSMOUTH NAVAL SHIPYARD
KITTERY, ME
DRY DOCK #1 DEFUELING COMPLEX
M-140 COMPLEX
REFLECTED CEILING PLANS

EPROJECT NO.: 1363311
CONSTR. CONTR. NO.: N40085-17-C-5002
NAVFAC DRAWING NO.: 12734881
SHEET 98 OF 188
A-108 DD1-16-962

DRAWFORM REVISION: 10 OCTOBER 2014

10/28/2016 6:43:37 AM X:\297 PORTSMOUTH NAVAL SHIPYARD\297.005.001 - DD#1 DEFUELING COMPLEX DESIGN\DRAWINGS\M140\SHEETS\A-108.DWG

KEYED NOTES

1. 3" INSULATED METAL PANEL
2. 6" INSULATED METAL PANEL, 2HR FIRE RATED
3. 2" INTERIOR STUDLESS WALL PANEL
4. 1/4" STEEL PLATE ROOF, SLOPE (UNLESS STATED OTHERWISE) IN DIRECTION INDICATED
5. DEMINERALIZER (DEMIN) BY PNSY, SEE GA-100 & GA-100A
6. 8'-0" HIGH CONCRETE DEMIN SHIELDING WALL
7. WIRE MESH PARTITION TO UNDERSIDE OF STRUCTURE
8. 6" DIA UTILITY CUTOUT LOCATED 1'-0" ABOVE TOP OF CURB. SEE SHEET DETAIL D2/A-507
9. 5'-0" HIGH TOOL COLUMN PEDESTAL
10. DECK INSERT. SEE A-401 FOR DETAILS
11. 5'-2" HIGH HINGED WALL PANEL, SEE A-401
12. 6" UTILITY CUTOUT FOR CONNECTION BETWEEN DEMIN AND LEVEL 01 – SEE DETAIL A2/A-507
13. APD HOSE CUTOUT (2") – SEE DTL C1/A-507
14. 1/2" LINER PANEL CEILING
15. 1/4" STEEL PLATE WALL PANEL
16. 1/4" STEEL PLATE ROOF WITH NON-SLIP PAINT

NOTES

1. SEE DRAWING A-001 FOR GENERAL NOTES, ABBREVIATIONS AND LEGEND.

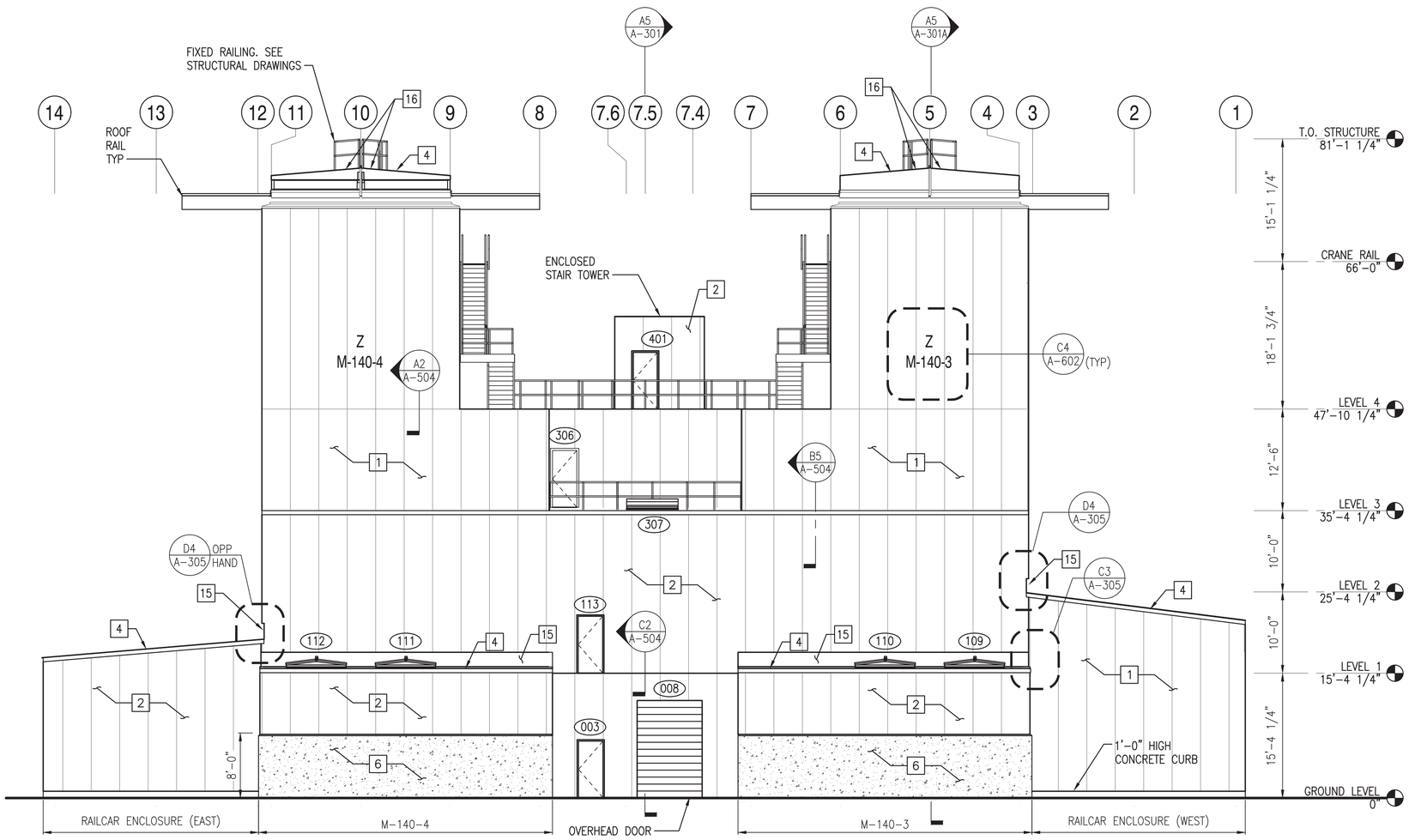

NORTH ELEVATION (NO STORAGE ENCLOSURE)

SCALE: 1/8" = 1'-0"

A-100, A-101, A-102, A-103, A-104, A-105, A-106

A3

0 4' 8' 16'
Scale: 1/8" = 1'-0"

SYM	DESCRIPTION	DATE	APPR
0	ISSUED FOR CONSTRUCTION	10/28/2016	CBC

NAVFAC

REGISTERED ARCHITECT DONALD M. DYER No. 859 STATE OF MAINE 10/28/16

Colby Company engineering

A/E INFO

APPROVED David W. Trumfield
FOR COMMANDER NAVFAC

ACTIVITY: TIM FISHER C. 2370.6 BRANCH HEAD

SATISFACTORY TO DATE 10/28/2016

DES GJN DRW GJN CHK DMD

PMDM: PETER STOCKLESS
BRANCH MANAGER: IAN BODWELL
FEADPM&E: AMIN BAHROUR
FIRE PROTECTION: PATRICK BAKAJ

DEPARTMENT OF THE NAVY
NAVAL FACILITIES ENGINEERING COMMAND
PUBLIC WORKS DEPARTMENT, MAINE

NAVAL FACILITIES ENGINEERING COMMAND ~ MID-ATLANTIC
NAVAL SHIPYARD, PORTSMOUTH, NH

PORTSMOUTH NAVAL SHIPYARD
KITTERY, ME

DRY DOCK #1 DEFUELING COMPLEX
M-140 COMPLEX

EXTERIOR ELEVATIONS (NO STORAGE ENCLOSURE)

EPROJECT NO.: 1363311
CONSTR. CONTR. NO. N40085-17-C-5002
NAVFAC DRAWING NO. 12734882
SHEET 99 OF 188

A-201 | DD1-16-963

DRAWFORM REVISION: 10 OCTOBER 2014

10/28/2016 6:43:42 AM X:\297 PORTSMOUTH NAVAL SHIPYARD\297.005.001 - DD#1 DEFUELING COMPLEX DESIGN\DRAWINGS\M140\SHEETS\A-201.DWG

KEYED NOTES

1. 3" INSULATED METAL PANEL
2. 6" INSULATED METAL PANEL, 2HR FIRE RATED
3. 2" INTERIOR STUDLESS WALL PANEL
4. 1/4" STEEL PLATE ROOF, SLOPE (UNLESS STATED OTHERWISE) IN DIRECTION INDICATED
5. DEMINERALIZER (DEMIN) BY PNSY, SEE GA-100 & GA-100A
6. 8'-0" HIGH CONCRETE DEMIN SHIELDING WALL
7. WIRE MESH PARTITION TO UNDERSIDE OF STRUCTURE
8. 6" DIA UTILITY CUTOUT LOCATED 1'-0" ABOVE TOP OF CURB. SEE SHEET DETAIL D2/A-507
9. 5'-0" HIGH TOOL COLUMN PEDESTAL
10. DECK INSERT. SEE A-401 FOR DETAILS
11. 5'-2" HIGH HINGED WALL PANEL, SEE A-401
12. 6" UTILITY CUTOUT FOR CONNECTION BETWEEN DEMIN AND LEVEL 01 – SEE DETAIL A2/A-507
13. APD HOSE CUTOUT (2") – SEE DTL C1/A-507
14. 1/2" LINER PANEL CEILING
15. 1/4" STEEL PLATE WALL PANEL
16. 1/4" STEEL PLATE ROOF WITH NON-SLIP PAINT

NOTES

1. SEE DRAWING A-001 FOR GENERAL NOTES, ABBREVIATIONS AND LEGEND.

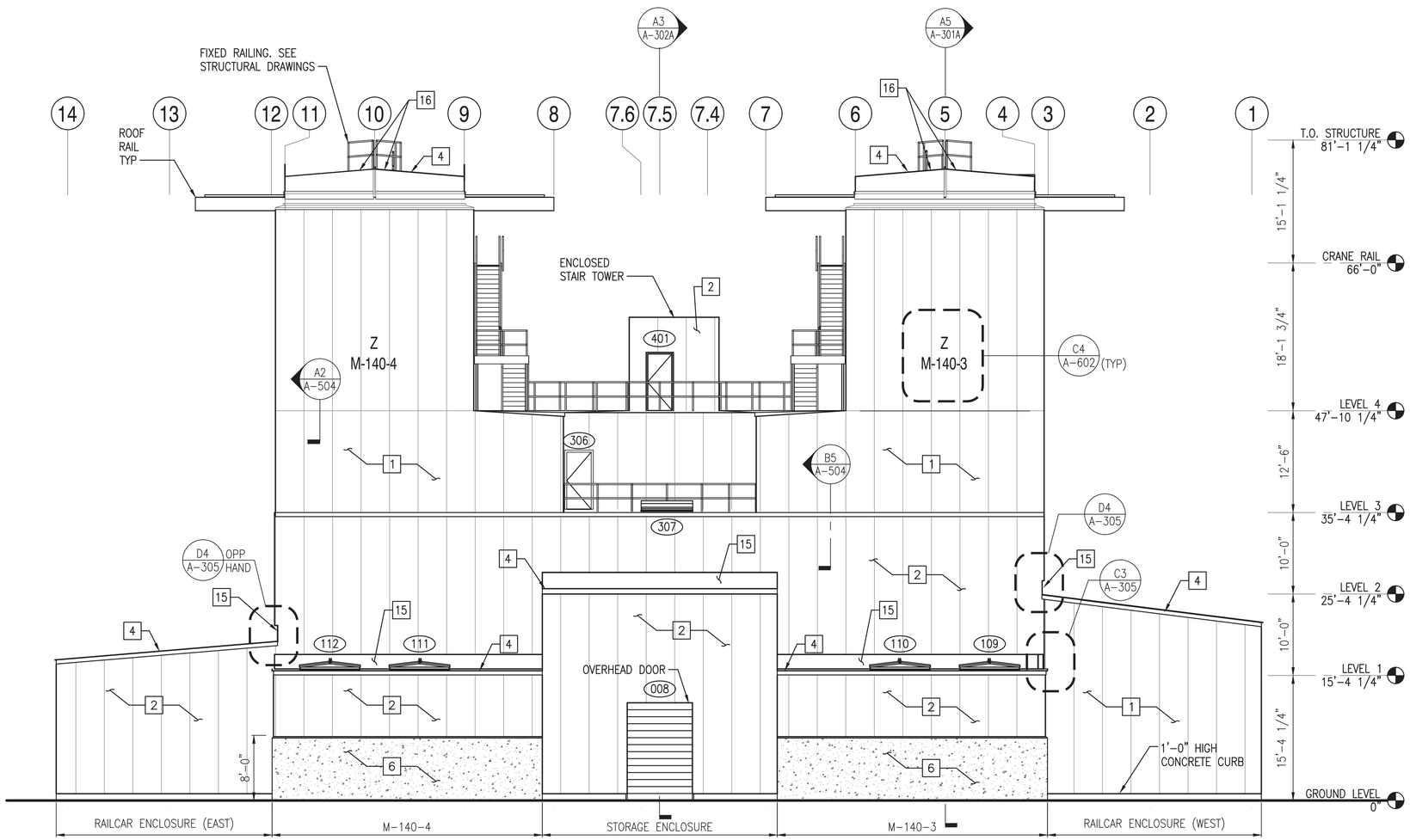

NORTH ELEVATION

SCALE: 1/8" = 1'-0"

A-100A, A-101A, A-102, A-103, A-104, A-105, A-106

A3

0 4' 8' 16'
Scale: 1/8" = 1'-0"

SYM	DESCRIPTION	DATE	APPR
0	ISSUED FOR CONSTRUCTION	10/28/2016	CBC

NAVFAC

REGISTERED ARCHITECT DONALD M. DYER No. 859 STATE OF MAINE 10/28/16

Colby Company engineering

A/E INFO

APPROVED
David W. Trumfield
FOR COMMANDER NAVFAC

ACTIVITY
TIM FISHER
C. 2370.6 BRANCH HEAD

SATISFACTORY TO DATE 10/28/2016

DES GJN DRW GJN CHK DMD

PMDM PETER STOCKLESS
BRANCH MANAGER IAN BODWELL
FEADPM&E AMIN BAHROUR
FIRE PROTECTION PATRICK BAKAJ

DEPARTMENT OF THE NAVY
NAVAL FACILITIES ENGINEERING COMMAND
PUBLIC WORKS DEPARTMENT, MAINE

NAVAL FACILITIES ENGINEERING COMMAND ~ MID-ATLANTIC
NAVAL SHIPYARD, PORTSMOUTH, NH

PORTSMOUTH NAVAL SHIPYARD
KITTERY, ME

DRY DOCK #1 DEFUELING COMPLEX
M-140 COMPLEX

EXTERIOR ELEVATIONS

EPROJECT NO.: 1363311

CONSTR. CONTR. NO.
N40085-17-C-5002

NAVFAC DRAWING NO.
12734883

SHEET 100 OF 188

A-201A DD1-16-964

DRAWFORM REVISION: 10 OCTOBER 2014

10/28/2016 6:43:47 AM X:\297 PORTSMOUTH NAVAL SHIPYARD\297.005.001 - DD#1 DEFUELING COMPLEX DESIGN\DRAWINGS\M140\SHEETS\A-201A.DWG