KEYED NOTES

1. 3" INSULATED METAL PANEL
2. 6" INSULATED METAL PANEL, 2HR FIRE RATED
3. 2" INTERIOR STUDLESS WALL PANEL
4. 1/4" STEEL PLATE ROOF, SLOPE (UNLESS STATED OTHERWISE) IN DIRECTION INDICATED
5. DEMINERALIZER (DEMIN) BY PNSY, SEE GA-100 & GA-100A
6. 8'-0" HIGH CONCRETE DEMIN SHIELDING WALL
7. WIRE MESH PARTITION TO UNDERSIDE OF STRUCTURE
8. 6" DIA UTILITY CUTOUT LOCATED 1'-0" ABOVE TOP OF CURB. SEE SHEET DETAIL D2/A-507
9. 5'-0" HIGH TOOL COLUMN PEDESTAL
10. DECK INSERT. SEE A-401 FOR DETAILS
11. 5'-2" HIGH HINGED WALL PANEL, SEE A-401
12. 6" UTILITY CUTOUT FOR CONNECTION BETWEEN DEMIN AND LEVEL 01 – SEE DETAIL A2/A-507
13. APD HOSE CUTOUT (2") – SEE DTL C1/A-507
14. 1/2" LINER PANEL CEILING
15. 1/4" STEEL PLATE WALL PANEL
16. 1/4" STEEL PLATE ROOF WITH NON-SLIP PAINT

NOTES

1. SEE DRAWING A-001 FOR GENERAL NOTES, ABBREVIATIONS AND LEGEND.

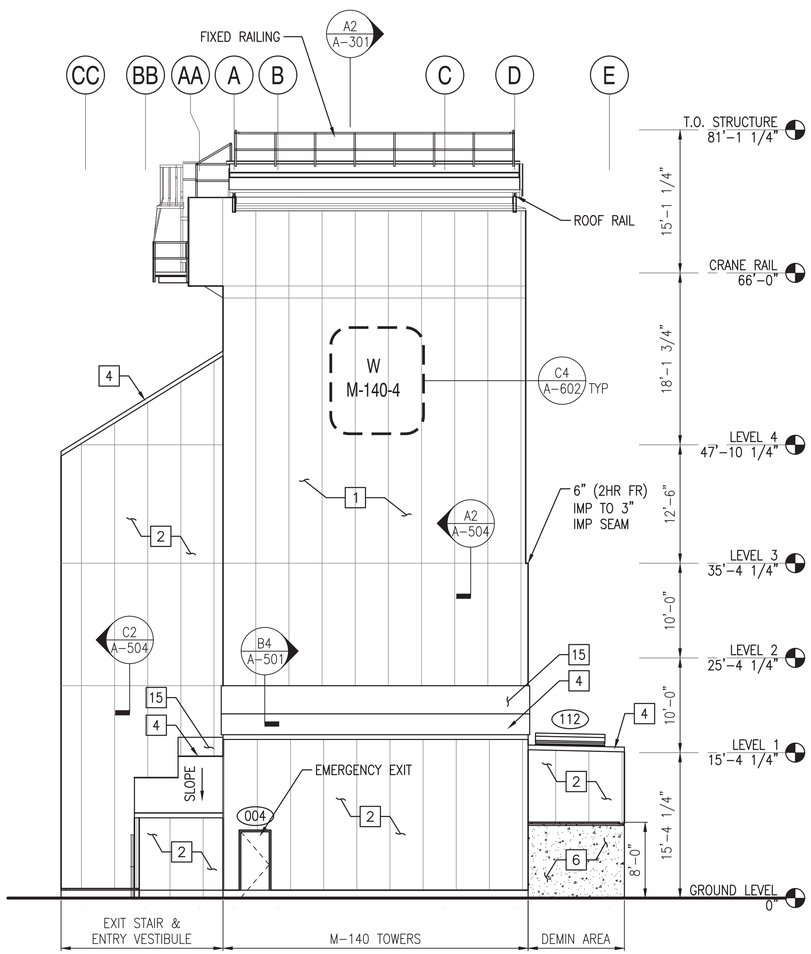

EAST ELEVATION (NO STORAGE ENCLOSURE)

SCALE: 1/8" = 1'-0"

A-100, A-101, A-102, A-103, A-104, A-105, A-106

A2

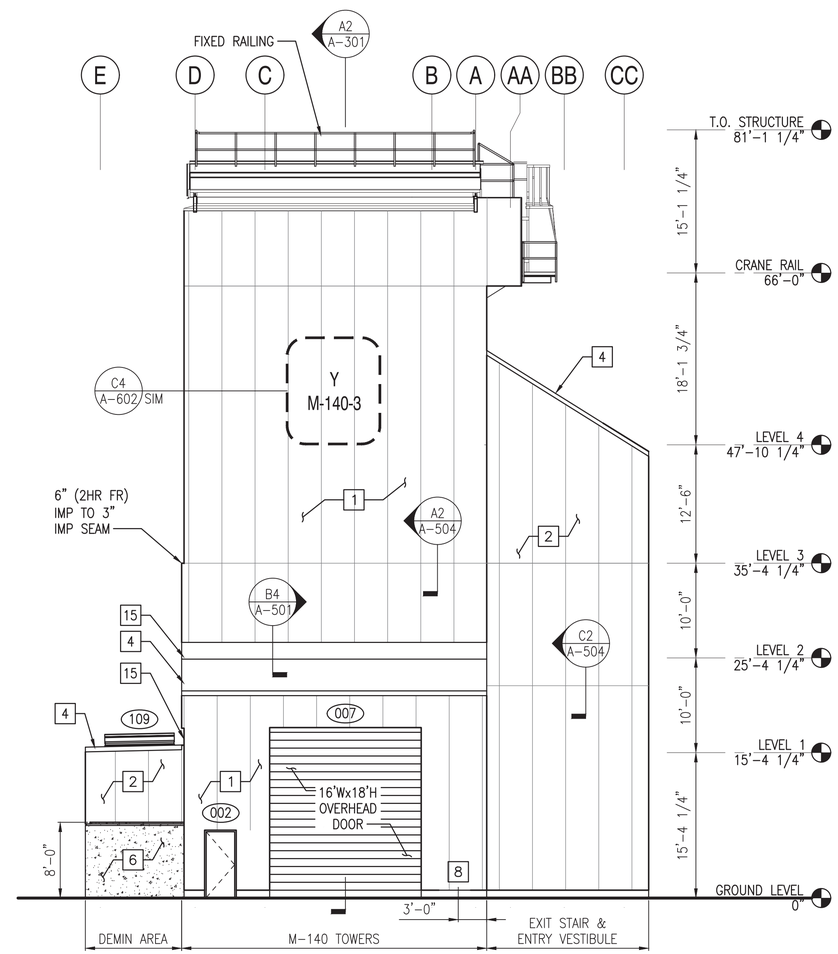

WEST ELEVATION (NO STORAGE ENCLOSURE)

SCALE: 1/8" = 1'-0"

A-100, A-101, A-102, A-103, A-104, A-105, A-106

A4

0 4' 8' 16'
Scale: 1/8" = 1'-0"

SYM	DESCRIPTION	DATE	APPR
0	ISSUED FOR CONSTRUCTION	10/28/2016	CBC

NAVFAC

REGISTERED ARCHITECT
DONALD M. DYER
No. 859
STATE OF MAINE
10/28/16

Colby Company engineering

A/E INFO

APPROVED
David W. Trumfield
FOR COMMANDER NAVFAC

ACTIVITY
TIM FISHER
C. 2370.6 BRANCH HEAD

SATISFACTORY TO DATE 10/28/2016

DES GJN DRW GJN CHK DMD

PMDM PETER STOCKLESS

BRANCH MANAGER IAN BODWELL

FEA/PM&E AMIN BAHROUR

FIRE PROTECTION PATRICK BAKAJ

DEPARTMENT OF THE NAVY
NAVAL FACILITIES ENGINEERING COMMAND
PUBLIC WORKS DEPARTMENT - MAINE

NAVAL FACILITIES ENGINEERING COMMAND ~ MID-ATLANTIC
NAVAL SHIPYARD: PORTSMOUTH, NH

PORTSMOUTH NAVAL SHIPYARD
KITTERY, ME

DRY DOCK #1 DEFUELING COMPLEX
M-140 COMPLEX

EXTERIOR ELEVATIONS (NO STORAGE ENCLOSURE)

EPROJECT NO.: 1363311

CONSTR. CONTR. NO.
N40085-17-C-5002

NAVFAC DRAWING NO.
12734884

SHEET 101 OF 188

A-202 DD1-16-965

DRAWFORM REVISION: 10 OCTOBER 2014

10/28/2016 6:43:51 AM X:\297 PORTSMOUTH NAVAL SHIPYARD\297.005.001 - DD#1 DEFUELING COMPLEX DESIGN\DRAWINGS\M140\SHEETS\A-202.DWG

KEYED NOTES

1. 3" INSULATED METAL PANEL
2. 6" INSULATED METAL PANEL, 2HR FIRE RATED
3. 2" INTERIOR STUDLESS WALL PANEL
4. 1/4" STEEL PLATE ROOF, SLOPE (UNLESS STATED OTHERWISE) IN DIRECTION INDICATED
5. DEMINERALIZER (DEMIN) BY PNSY, SEE GA-100 & GA-100A
6. 8'-0" HIGH CONCRETE DEMIN SHIELDING WALL
7. WIRE MESH PARTITION TO UNDERSIDE OF STRUCTURE
8. 6" DIA UTILITY CUTOUT LOCATED 1'-0" ABOVE TOP OF CURB. SEE SHEET DETAIL D2/A-507
9. 5'-0" HIGH TOOL COLUMN PEDESTAL
10. DECK INSERT. SEE A-401 FOR DETAILS
11. 5'-2" HIGH HINGED WALL PANEL, SEE A-401
12. 6" UTILITY CUTOUT FOR CONNECTION BETWEEN DEMIN AND LEVEL 01 – SEE DETAIL A2/A-507
13. APD HOSE CUTOUT (2") – SEE DTL C1/A-507
14. 1/2" LINER PANEL CEILING
15. 1/4" STEEL PLATE WALL PANEL
16. 1/4" STEEL PLATE ROOF WITH NON-SLIP PAINT

NOTES

1. SEE DRAWING A-001 FOR GENERAL NOTES, ABBREVIATIONS AND LEGEND.

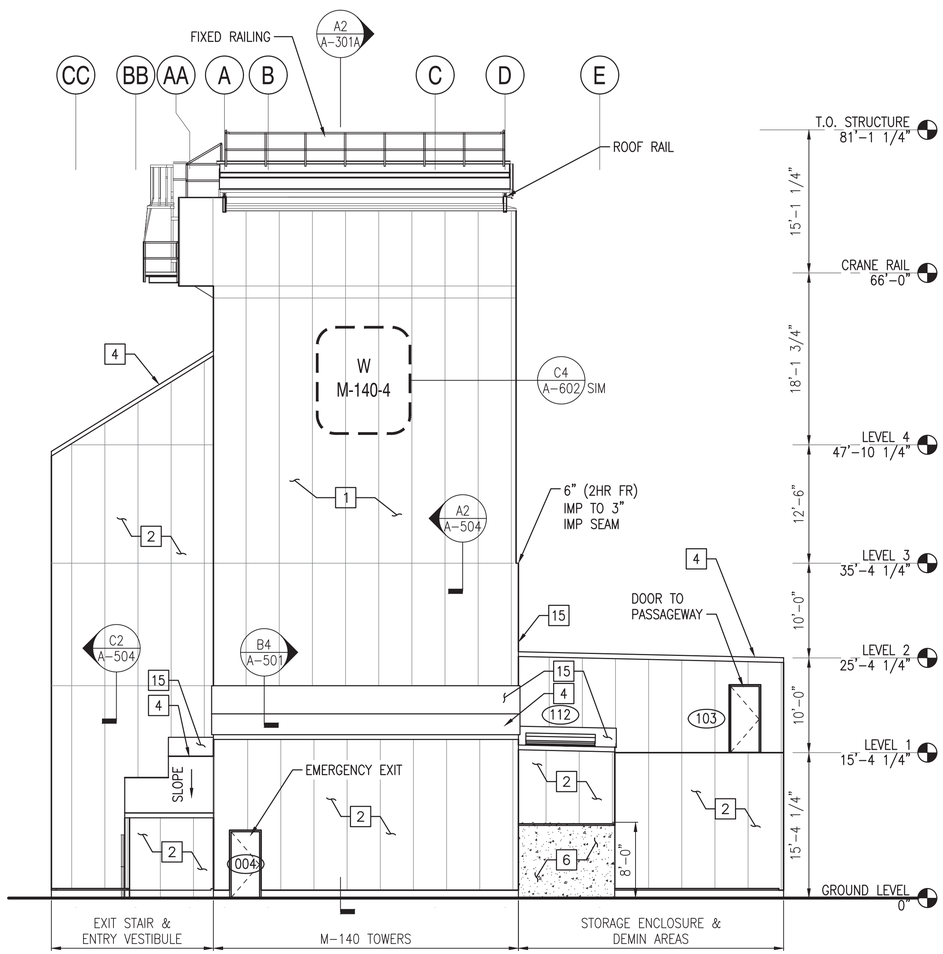

EAST ELEVATION

SCALE: 1/8" = 1'-0"

A-100A, A-101A, A-102, A-103, A-104, A-105, A-106

A2

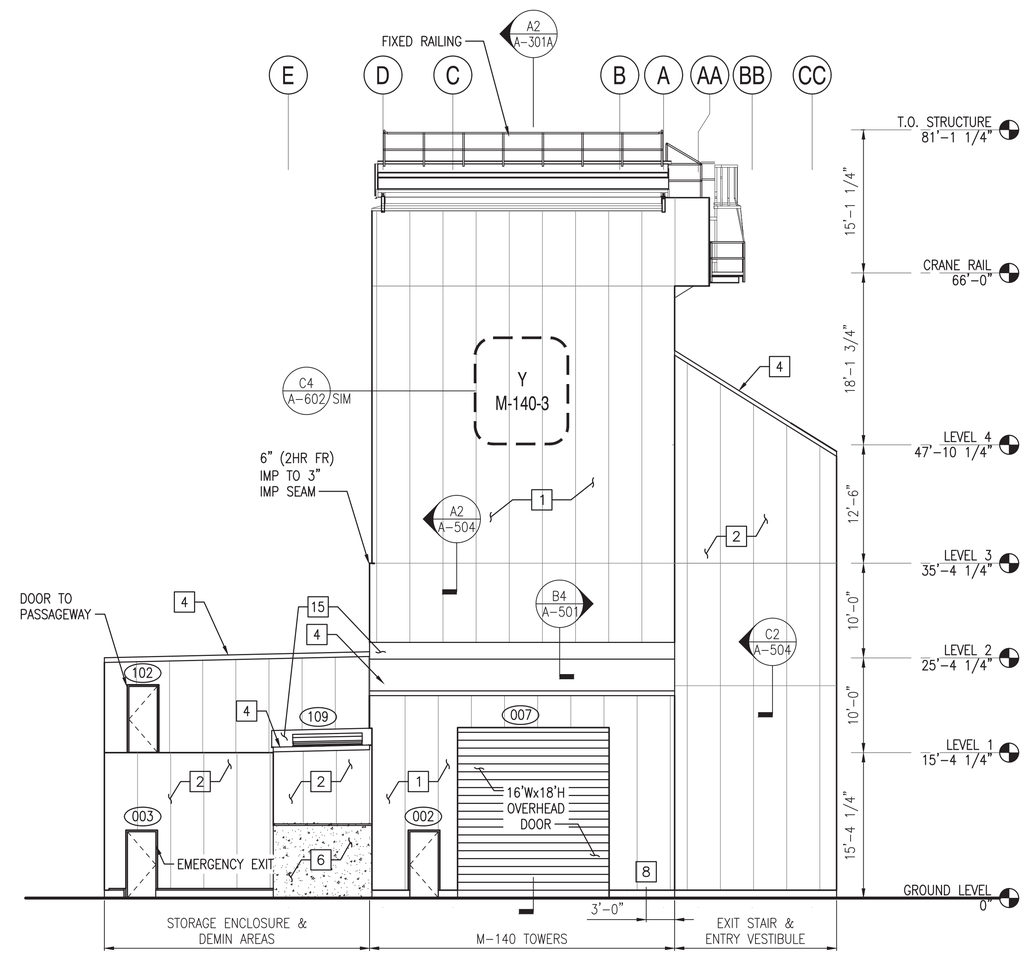

WEST ELEVATION

SCALE: 1/8" = 1'-0"

A-100A, A-101A, A-102, A-103, A-104, A-105, A-106

A4

0 4' 8' 16'
Scale: 1/8" = 1'-0"

SYM	DESCRIPTION	DATE	APPR
0	ISSUED FOR CONSTRUCTION	10/28/2016	CBC

NAVFAC

REGISTERED ARCHITECT DONALD M. DYER No. 859 STATE OF MAINE 10/28/16

Colby Company engineering

A/E INFO

APPROVED
David W. Trumfield
FOR COMMANDER NAVFAC

ACTIVITY
TIM FISHER
C. 2370.6 BRANCH HEAD

SATISFACTORY TO DATE 10/28/2016

DES GJN DRW GJN CHK DMD

PMDM PETER STOCKLESS
BRANCH MANAGER IAN BODWELL
FEA/PM&E AMIN BAHROUR
FIRE PROTECTION PATRICK BAKAJ

DEPARTMENT OF THE NAVY
NAVAL FACILITIES ENGINEERING COMMAND
PUBLIC WORKS DEPARTMENT - MAINE

NAVAL FACILITIES ENGINEERING COMMAND ~ MID-ATLANTIC
NAVAL SHIPYARD - PORTSMOUTH, NH

PORTSMOUTH NAVAL SHIPYARD
KITTERY, ME

DRY DOCK #1 DEFUELING COMPLEX
M-140 COMPLEX

EXTERIOR ELEVATIONS

EPROJECT NO.: 1363311

CONSTR. CONTR. NO.
N40085-17-C-5002

NAVFAC DRAWING NO.
12734885

SHEET 102 OF 188

A-202A DD1-16-966

DRAWFORM REVISION: 10 OCTOBER 2014

10/28/2016 6:43:56 AM X:\297 PORTSMOUTH NAVAL SHIPYARD\297.005.001 - DD#1 DEFUELING COMPLEX DESIGN\DRAWINGS\M140\SHEETS\A-202A.DWG

KEYED NOTES

1. 3" INSULATED METAL PANEL
2. 6" INSULATED METAL PANEL, 2HR FIRE RATED
3. 2" INTERIOR STUDLESS WALL PANEL
4. 1/4" STEEL PLATE ROOF, SLOPE (UNLESS STATED OTHERWISE) IN DIRECTION INDICATED
5. DEMINERALIZER (DEMIN) BY PNSY, SEE GA-100 & GA-100A
6. 8'-0" HIGH CONCRETE DEMIN SHIELDING WALL
7. WIRE MESH PARTITION TO UNDERSIDE OF STRUCTURE
8. 6" DIA UTILITY CUTOUT LOCATED 1'-0" ABOVE TOP OF CURB. SEE SHEET DETAIL D2/A-507
9. 5'-0" HIGH TOOL COLUMN PEDESTAL
10. DECK INSERT. SEE A-401 FOR DETAILS
11. 5'-2" HIGH HINGED WALL PANEL, SEE A-401
12. 6" UTILITY CUTOUT FOR CONNECTION BETWEEN DEMIN AND LEVEL 01 – SEE DETAIL A2/A-507
13. APD HOSE CUTOUT (2") – SEE DTL C1/A-507
14. 1/2" LINER PANEL CEILING
15. 1/4" STEEL PLATE WALL PANEL
16. 1/4" STEEL PLATE ROOF WITH NON-SLIP PAINT

NOTES

1. SEE DRAWING A-001 FOR GENERAL NOTES, ABBREVIATIONS AND LEGEND.

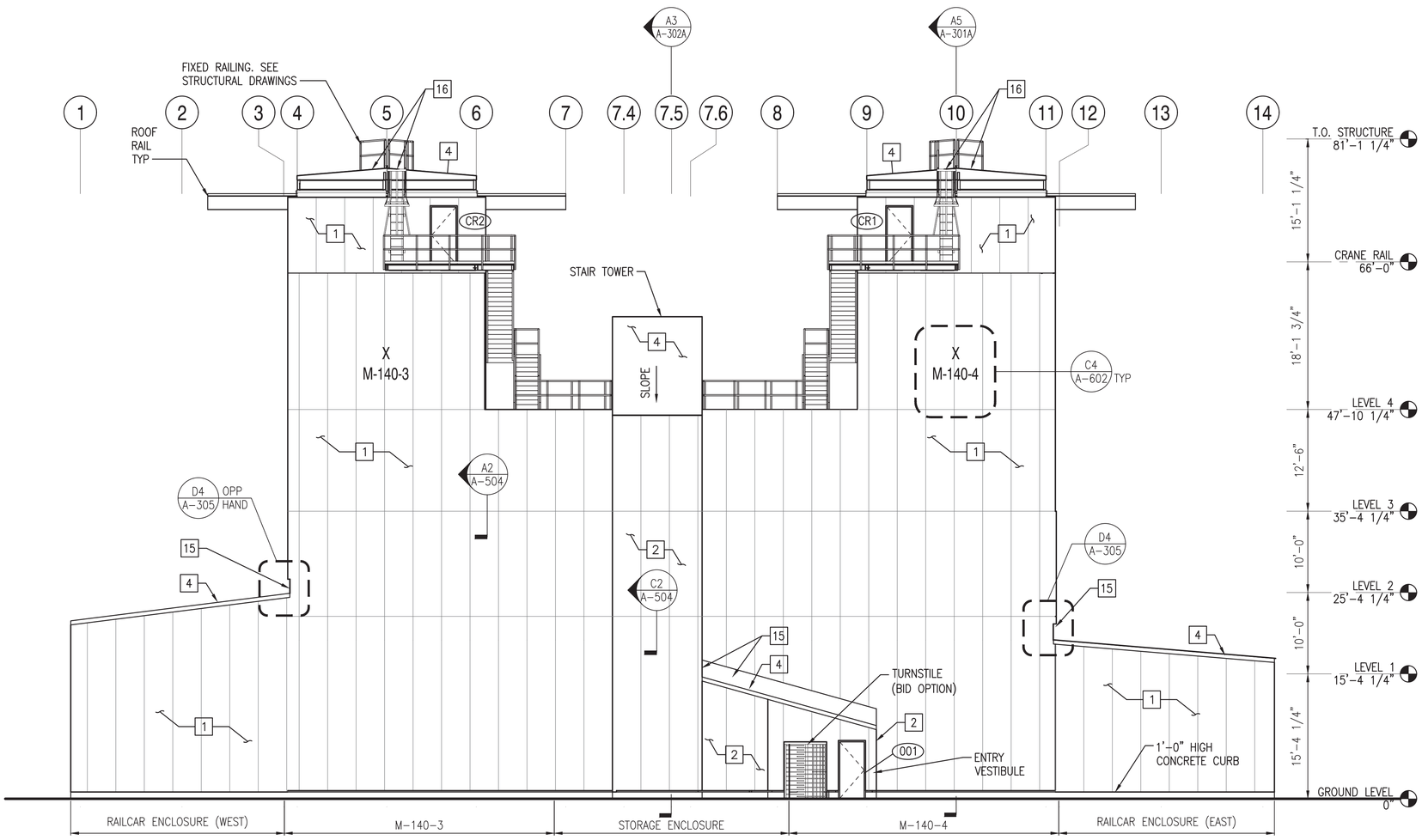

SOUTH ELEVATION

SCALE: 1/8" = 1'-0"

A-100, A-100A, A-101, A-101A, A-102, A-103, A-104, A-105, A-106

A3

Scale: 1/8" = 1'-0"

SYM	DESCRIPTION	DATE	APPR
0	ISSUED FOR CONSTRUCTION	10/28/2016	CBC

NAVFAC

REGISTERED ARCHITECT DONALD M. DYER No. 859 STATE OF MAINE 10/28/16

Colby Company engineering

A/E INFO

APPROVED BY: David W. Thumfuld

FOR COMMANDER NAVFAC

ACTIVITY: TIM FISHER C. 2370.6 BRANCH HEAD

SATISFACTORY TO DATE 10/28/2016

DES GJN DRW GJN CHK DMD

PM/DM PETER STOCKLESS

BRANCH MANAGER IAN BODWELL

FEA/PM&E AMIN BAHROUR

FIRE PROTECTION PATRICK BAKAJ

DEPARTMENT OF THE NAVY
NAVAL FACILITIES ENGINEERING COMMAND
PUBLIC WORKS DEPARTMENT - MAINE

NAVAL FACILITIES ENGINEERING COMMAND – MID-ATLANTIC
NAVAL SHIPYARD - PORTSMOUTH, NH

PORTSMOUTH NAVAL SHIPYARD
KITTERY, ME

DRY DOCK #1 DEFUELING COMPLEX
M-140 COMPLEX

EXTERIOR ELEVATIONS

EPROJECT NO.: 1363311

CONSTR. CONTR. NO. N40085-17-C-5002

NAVFAC DRAWING NO. 12734886

SHEET 103 OF 188

A-203 | DD1-16-967

DRAWFORM REVISION: 10 OCTOBER 2014

10/28/2016 6:44:00 AM X:\297 PORTSMOUTH NAVAL SHIPYARD\297.005.001 - DD#1 DEFUELING COMPLEX DESIGN\DRAWINGS\M140\SHEETS\A-203.DWG

NOTES

1. SEE DRAWING A-001 FOR GENERAL NOTES, ABBREVIATIONS AND LEGEND.
2. SEE S-518 FOR STAIR SECTIONS.
3. ANY OPENINGS IN WIRE MESH PARTITION AND PERSONNEL GATE SURROUNDING DEMINERALIZER AREAS SHALL BE KEPT AS SMALL AS POSSIBLE (E.G., NO LARGER THAN 6" X 6"). WIRE MESH PARTITION TO GO TO UNDERSIDE OF STEEL STRUCTURE ABOVE WITH CUT-OUTS AROUND STRUCTURAL MEMBERS AS REQUIRED. WIRE MESH SHALL BE SECURED AS NECESSARY TO PREVENT FORCED ENTRY.

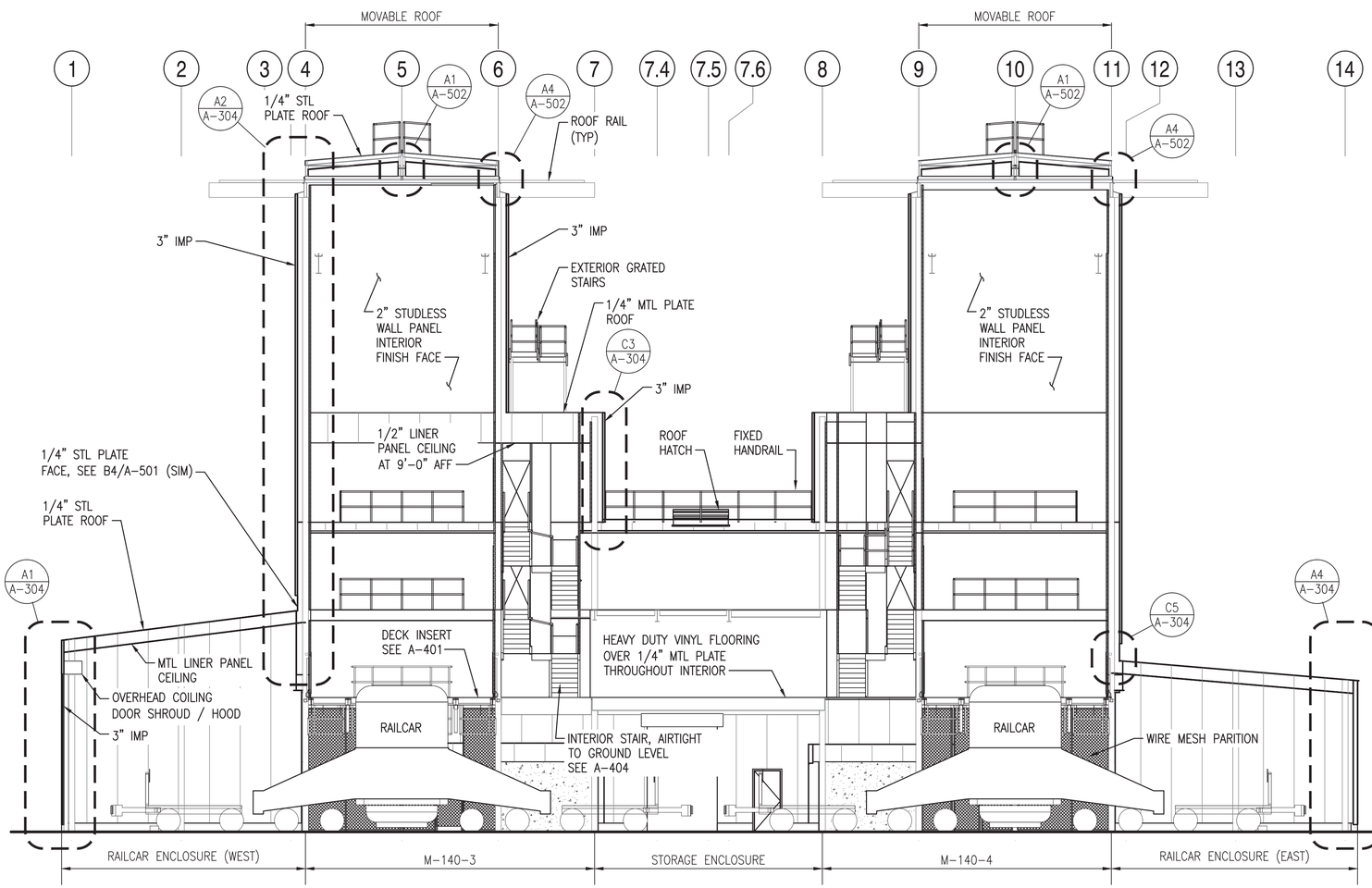

WEST EAST BUILDING SECTION (NO STORAGE ENCLOSURE)

SCALE: 1/8"=1'-0"

A-100, A-101, A-107, A-108, A-202 (A2)

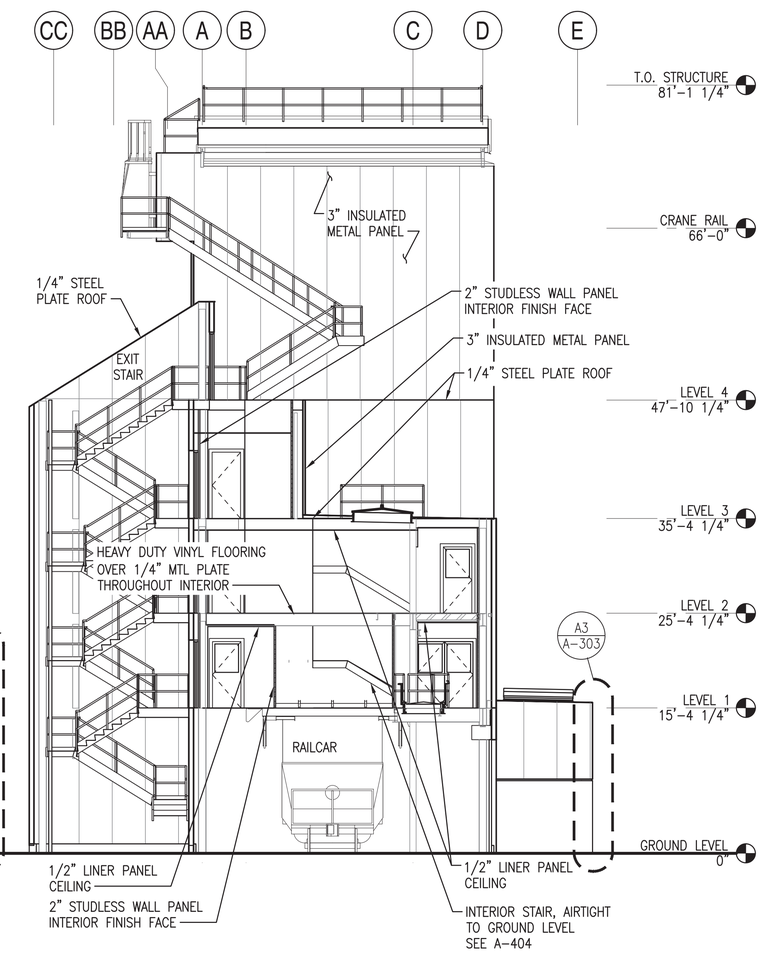

SOUTH NORTH BUILDING SECTION (NO STORAGE ENCLOSURE)

SCALE: 1/8"=1'-0"

A-100, A-101, A-102, A-107, A-108, A-201 (A5)

0 4' 8' 16'
Scale: 1/8" = 1'-0"

SYM	DESCRIPTION	DATE	APPR
0	ISSUED FOR CONSTRUCTION	10/28/2016	CBC

NAVFAC

REGISTERED ARCHITECT DONALD M. DYER No. 859 STATE OF MAINE 10/28/16

Colby Company engineering

APPROVED David W. Trumfield
FOR COMMANDER NAVFAC

ACTIVITY: TIM FISHER C. 2370.6 BRANCH HEAD

SATISFACTORY TO | DATE 10/28/2016
DES GJN | DRW GJN | CHK DMD
PMDM: PETER STOCKLESS
BRANCH MANAGER: IAN BODWELL
FEA/DPM&E: AMIN BAHROUR
FIRE PROTECTION: PATRICK BAKAJ

DEPARTMENT OF THE NAVY
NAVAL FACILITIES ENGINEERING COMMAND
PUBLIC WORKS DEPARTMENT - MAINE

NAVAL FACILITIES ENGINEERING COMMAND ~ MID-ATLANTIC
NAVAL SHIPYARD: PORTSMOUTH, NH

PORTSMOUTH NAVAL SHIPYARD
KITTERY, ME

DRY DOCK #1 DEFUELING COMPLEX
M-140 COMPLEX

SECTIONS (NO STORAGE ENCLOSURE)

EPROJECT NO.: 1363311
CONSTR. CONTR. NO. N40085-17-C-5002
NAVFAC DRAWING NO. 12734887
SHEET 104 OF 188
A-301 | DD1-16-968

DRAWFORM REVISION: 10 OCTOBER 2014

10/28/2016 6:44:09 AM X:\297 PORTSMOUTH NAVAL SHIPYARD\297.005.001 - DD#1 DEFUELING COMPLEX DESIGN\DRAWINGS\M140\SHEETS\A-301.DWG

NOTES

1. SEE DRAWING A-001 FOR GENERAL NOTES, ABBREVIATIONS AND LEGEND.
2. ANY OPENINGS IN WIRE MESH PARTITION AND PERSONNEL GATE SURROUNDING DEMINERALIZER AREAS SHALL BE KEPT AS SMALL AS POSSIBLE (E.G., NO LARGER THAN 6" X 6"). WIRE MESH PARTITION TO GO TO UNDERSIDE OF STEEL STRUCTURE ABOVE WITH CUT-OUTS AROUND STRUCTURAL MEMBERS AS REQUIRED. WIRE MESH SHALL BE SECURED AS NECESSARY TO PREVENT FORCED ENTRY.

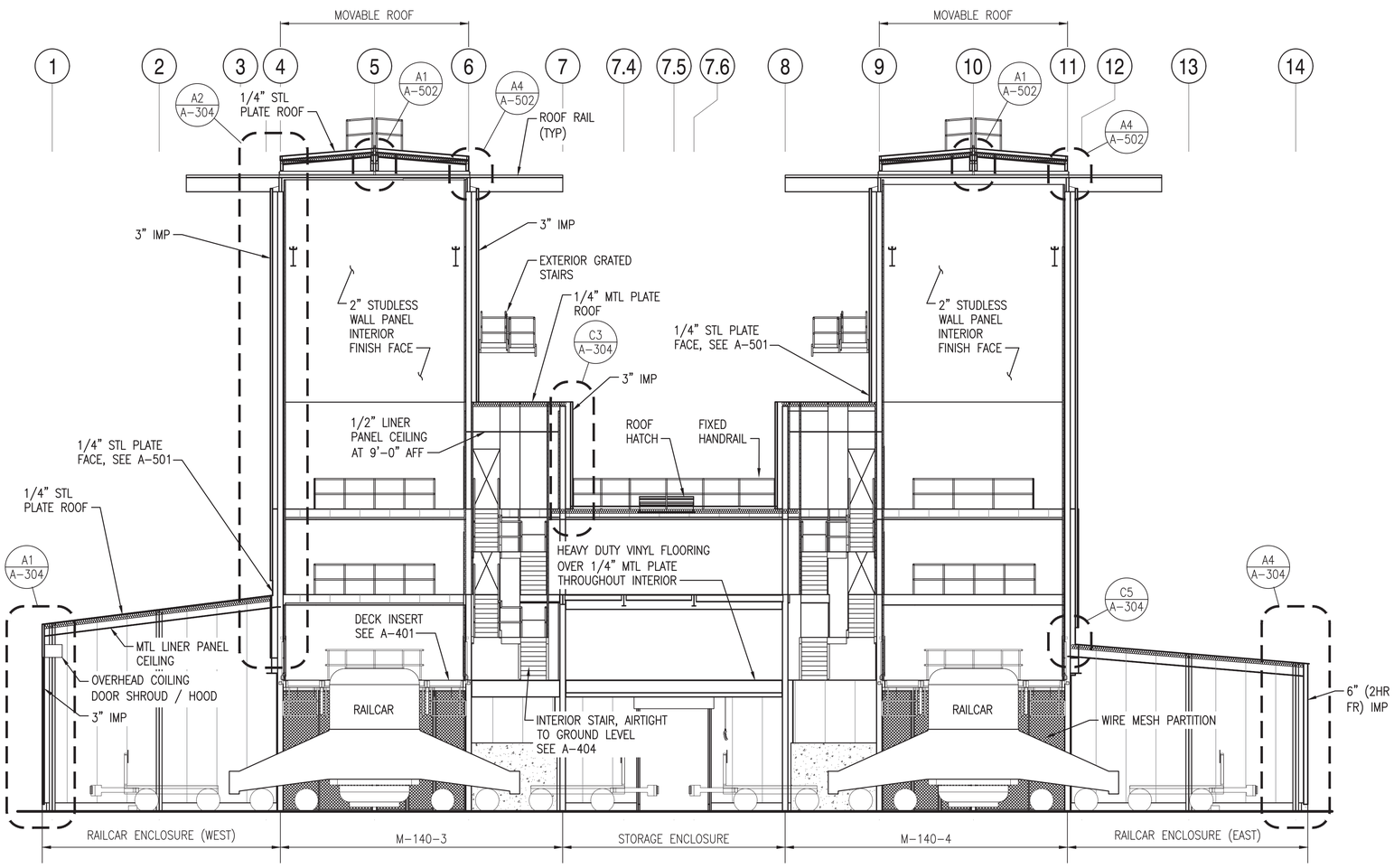

WEST EAST BUILDING SECTION

SCALE: 1/8"=1'-0"

A-100A, A-101A, A-102, A-103, A-104, A-202A

A2

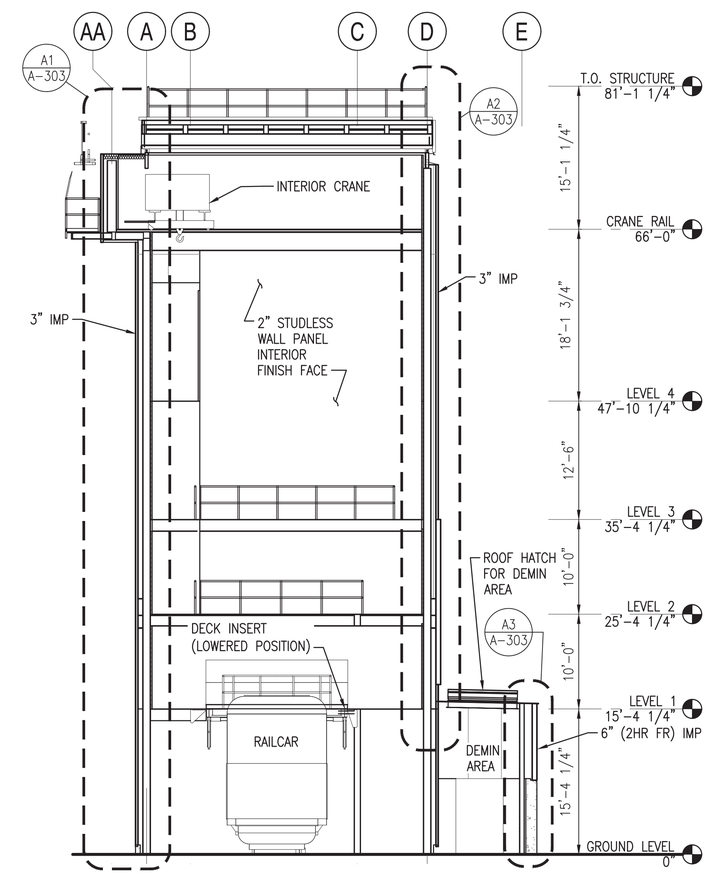

SECTION NOTE:
VIEW APPLIES TO BOTH BASE BID AND BID ALTERNATE CONDITIONS

SOUTH NORTH BUILDING SECTION

SCALE: 1/8"=1'-0"

A-100, A-100A, A-201, A-201A, A-203

A5

0 4' 8' 16'
Scale: 1/8" = 1'-0"

SYM	DESCRIPTION	DATE	APPR
0	ISSUED FOR CONSTRUCTION	10/28/2016	CBC

NAVFAC

REGISTERED ARCHITECT DONALD M. DYER No. 859 STATE OF MAINE 10/28/16

Colby Company engineering

A/E INFO

APPROVED David W. Thurfield
FOR COMMANDER NAVFAC

ACTIVITY: TIM FISHER C. 2370.6 BRANCH HEAD

SATISFACTORY TO DATE 10/28/2016

DES GJN DRW GJN CHK DMD

PMDM PETER STOCKLESS

BRANCH MANAGER IAN BODWELL

FEA/PM&E AMIN BAHROUR

FIRE PROTECTION PATRICK BAKAJ

DEPARTMENT OF THE NAVY
NAVAL FACILITIES ENGINEERING COMMAND
PUBLIC WORKS DEPARTMENT - MAINE

NAVAL FACILITIES ENGINEERING COMMAND ~ MID-ATLANTIC
NAVAL SHIPYARD - PORTSMOUTH, NH

PORTSMOUTH NAVAL SHIPYARD
KITTERY, ME

DRY DOCK #1 DEFUELING COMPLEX
M-140 COMPLEX

SECTIONS

EPROJECT NO.: 1363311

CONSTR. CONTR. NO. N40085-17-C-5002

NAVFAC DRAWING NO. 12734888

SHEET 105 OF 188

A-301A | DD1-16-969

DRAWFORM REVISION: 10 OCTOBER 2014

10/28/2016 6:44:22 AM X:\297 PORTSMOUTH NAVAL SHIPYARD\297.005.001 - DD#1 DEFUELING COMPLEX DESIGN\DRAWINGS\M140\SHEETS\A-301A.DWG

NOTES

1. SEE DRAWING A-001 FOR GENERAL NOTES, ABBREVIATIONS AND LEGEND.
2. SEE S-518 FOR STAIR SECTIONS.
3. ANY OPENINGS IN WIRE MESH PARTITION AND PERSONNEL GATE SURROUNDING DEMINERALIZER AREAS SHALL BE KEPT AS SMALL AS POSSIBLE (E.G., NO LARGER THAN 6" X 6"). WIRE MESH PARTITION TO GO TO UNDERSIDE OF STEEL STRUCTURE ABOVE WITH CUT-OUTS AROUND STRUCTURAL MEMBERS AS REQUIRED. WIRE MESH SHALL BE SECURED AS NECESSARY TO PREVENT FORCED ENTRY.

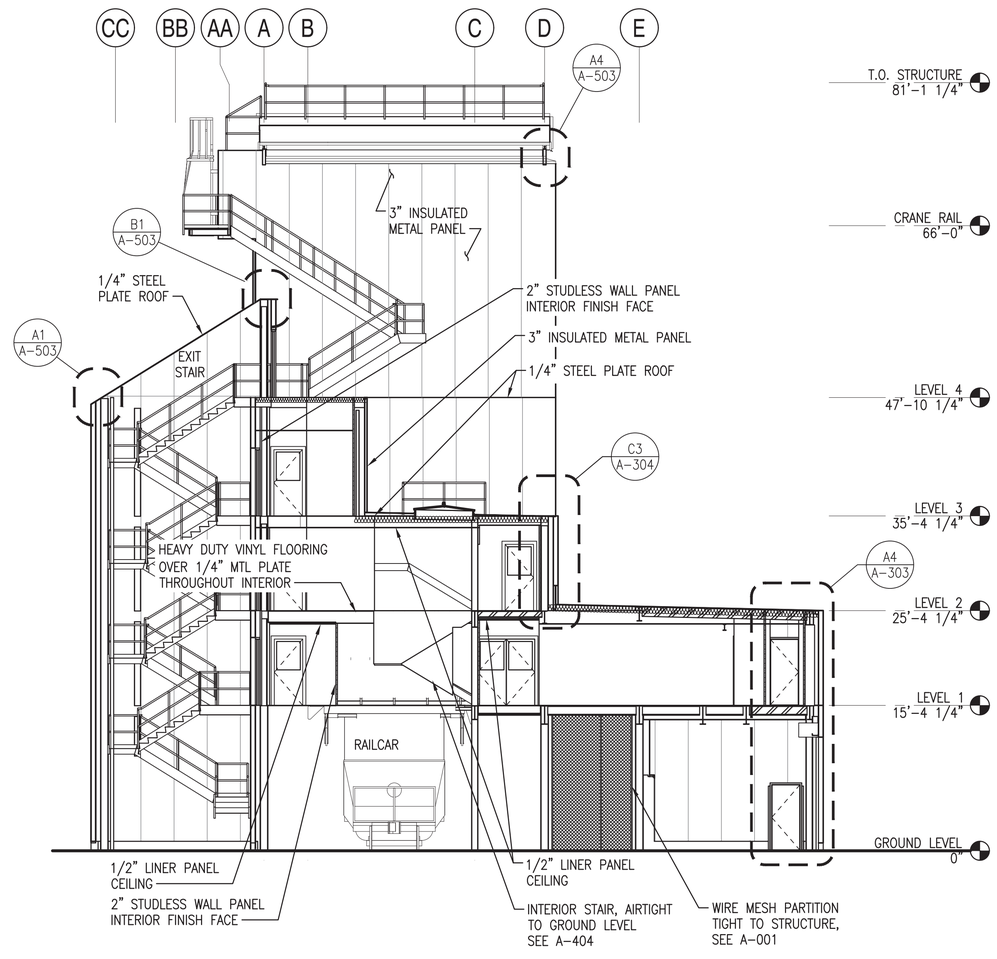

NORTH SOUTH BUILDING SECTION

SCALE: 1/8"=1'-0"

A-100A, A-101A, A-102, A-103, A-104, A-201A, A-203

A3

0 4' 8' 16'
Scale: 1/8" = 1'-0"

SYM	DESCRIPTION	DATE	APPR
0	ISSUED FOR CONSTRUCTION	10/28/2016	CBC

NAVFAC

REGISTERED ARCHITECT
DONALD M. DYER
No. 859
STATE OF MAINE
10/28/16

Colby Company engineering

A/E INFO

APPROVED
David W. Grunfeld
FOR COMMANDER NAVFAC

ACTIVITY
TIM FISHER
C. 2370.6 BRANCH HEAD

SATISFACTORY TO DATE 10/28/2016

DES GJN DRW GJN CHK DMD

PMDM PETER STOCKLESS

BRANCH MANAGER IAN BODWELL

FEA/PM&E AMIN BAHROUR

FIRE PROTECTION PATRICK BAKAJ

DEPARTMENT OF THE NAVY
NAVAL FACILITIES ENGINEERING COMMAND
PUBLIC WORKS DEPARTMENT - MAINE

NAVAL FACILITIES ENGINEERING COMMAND ~ MID-ATLANTIC
NAVAL SHIPYARD - PORTSMOUTH, NH

PORTSMOUTH NAVAL SHIPYARD
KITTERY, ME

DRY DOCK #1 DEFUELING COMPLEX
M-140 COMPLEX

BUILDING SECTION

EPROJECT NO.: 1363311

CONSTR. CONTR. NO.
N40085-17-C-5002

NAVFAC DRAWING NO.
12734889

SHEET 106 OF 188

A-302A DD1-16-970

DRAWFORM REVISION: 10 OCTOBER 2014

10/28/2016 6:44:32 AM X:\297 PORTSMOUTH NAVAL SHIPYARD\297.005.001 - DD#1 DEFUELING COMPLEX DESIGN\DRAWINGS\M140\SHEETS\A-302A.DWG

NOTES

1. SEE DRAWING A-001 FOR GENERAL NOTES, ABBREVIATIONS AND LEGEND.

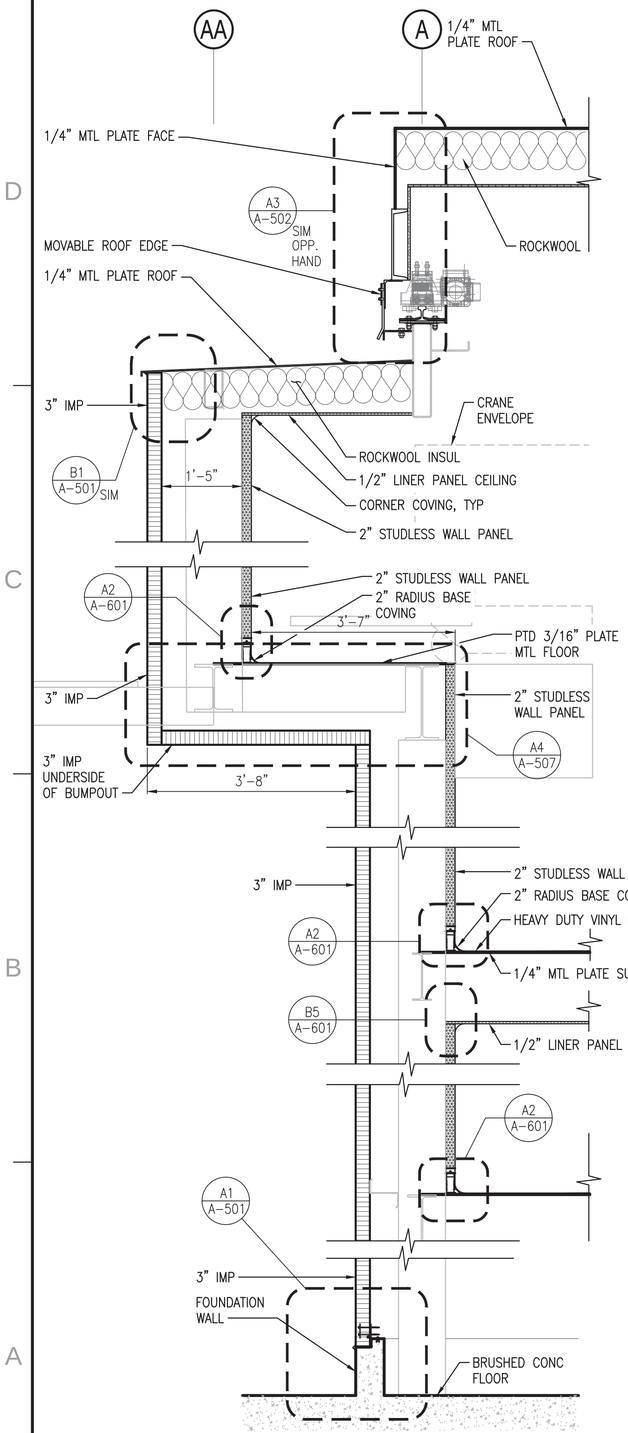

SOUTH TOWER WALL @ BUMPOUT

SCALE: 3/4"=1'-0" A-100, A-100A, A-101, A-101A, A-102, A-103, A-104, A-108, A-301A (A1)

NOTE: SEE S-522 FOR COORDINATION

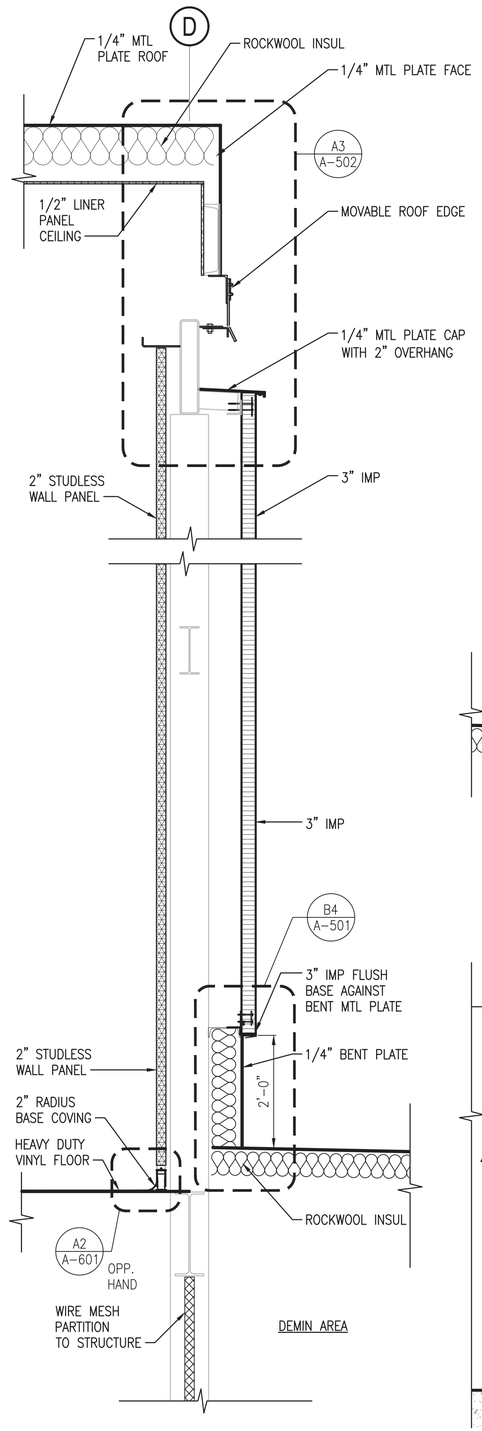

DEMIN AREA

NORTH TOWER WALL @ DEMIN AREA

SCALE: 3/4"=1'-0" A-101, A-101A, A-301A (A2)

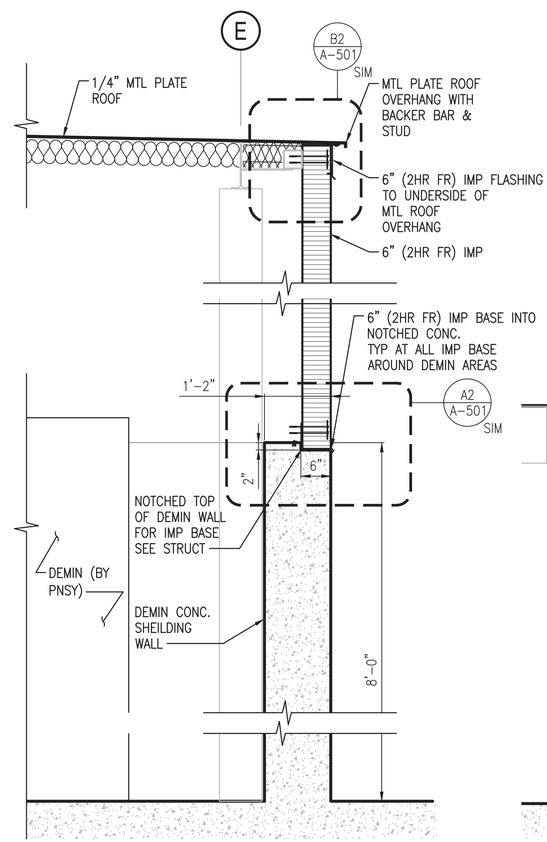

NOTE: TYPICAL AT DEMIN AREAS

DEMIN AREA SHEILDING WALL

SCALE: 3/4"=1'-0" A-100, A-100A, A-101, A-101A, A-107, A-301, A-301A (A3)

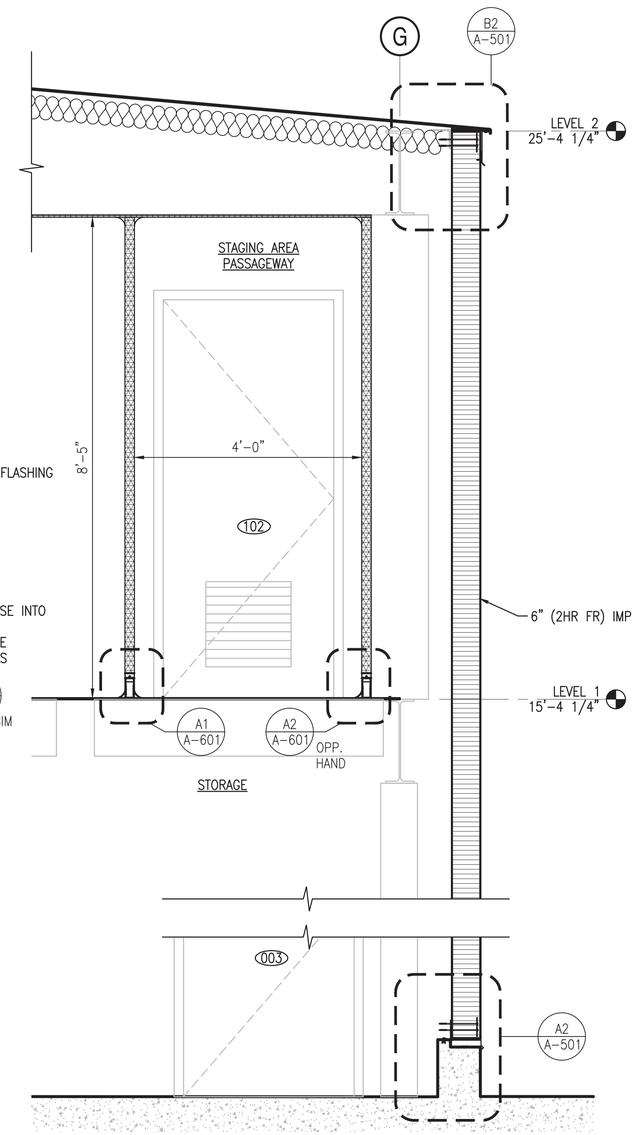

STORAGE AREA NORTH WALL

SCALE: 3/4"=1'-0" A-100A, A-101A, A-302 (A4)

0 1' 2' 3'
Scale: 3/4" = 1'-0"

SYM	DESCRIPTION	DATE	APPR
0	ISSUED FOR CONSTRUCTION	10/28/2016	CBC

NAVFAC

REGISTERED ARCHITECT DONALD M. DYER No. 859 STATE OF MAINE 10/28/16

Colby Company engineering

A/E INFO

APPROVED David W. Thurnfield FOR COMMANDER NAVFAC

ACTIVITY: TIM FISHER C. 2370.6 BRANCH HEAD

SATISFACTORY TO DATE 10/28/2016

DES GJN DRW GJN CHK DMD

PMDM PETER STOCKLESS

BRANCH MANAGER IAN BODWELL

FEAD/PMAE AMIN BAHROUR

FIRE PROTECTION PATRICK BAKAJ

DEPARTMENT OF THE NAVY
NAVAL FACILITIES ENGINEERING COMMAND
PUBLIC WORKS DEPARTMENT - MAINE

NAVAL FACILITIES ENGINEERING COMMAND ~ MID-ATLANTIC
NAVAL SHIPYARD - PORTSMOUTH, NH

PORTSMOUTH NAVAL SHIPYARD
DRY DOCK #1 DEFUELING COMPLEX
M-140 COMPLEX

KITTERY, ME

WALL SECTIONS

EPROJECT NO.: 1363311

CONSTR. CONTR. NO. N40085-17-C-5002

NAVFAC DRAWING NO. 12734890

SHEET 107 OF 188

A-303 | DD1-16-971

DRAWFORM REVISION: 10 OCTOBER 2014

10/28/2016 6:45:14 AM X:\297 PORTSMOUTH NAVAL SHIPYARD\297.005.001 - DD#1 DEFUELING COMPLEX DESIGN\DRAWINGS\M140\SHEETS\A-303.DWG

NOTES

1. SEE DRAWING A-001 FOR GENERAL NOTES, ABBREVIATIONS AND LEGEND.

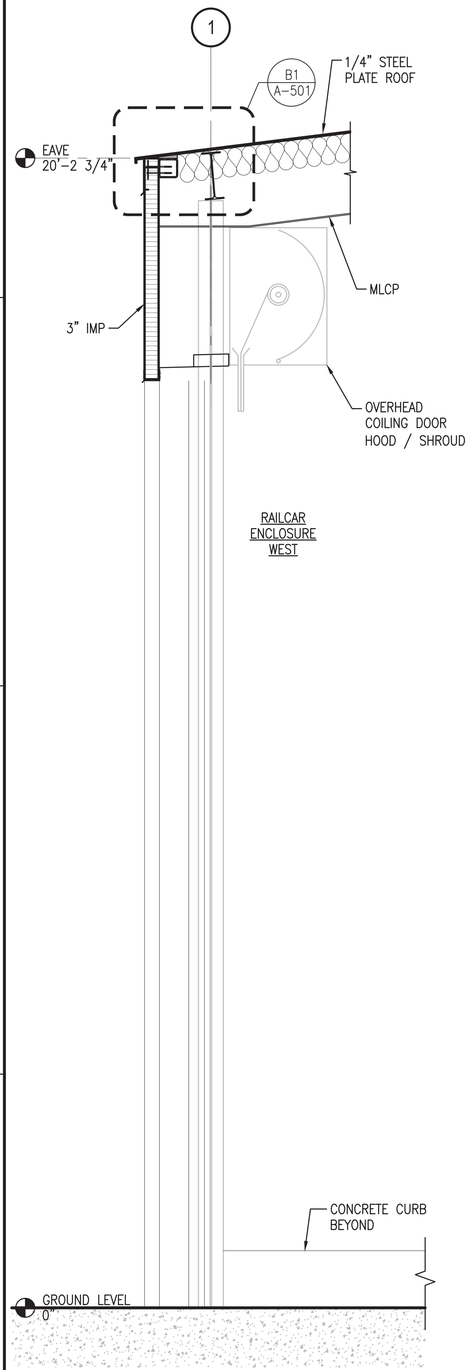

RAILCAR ENCLOSURE WEST WALL (A1)

SCALE: 3/4"=1'-0" A-301, A-301A

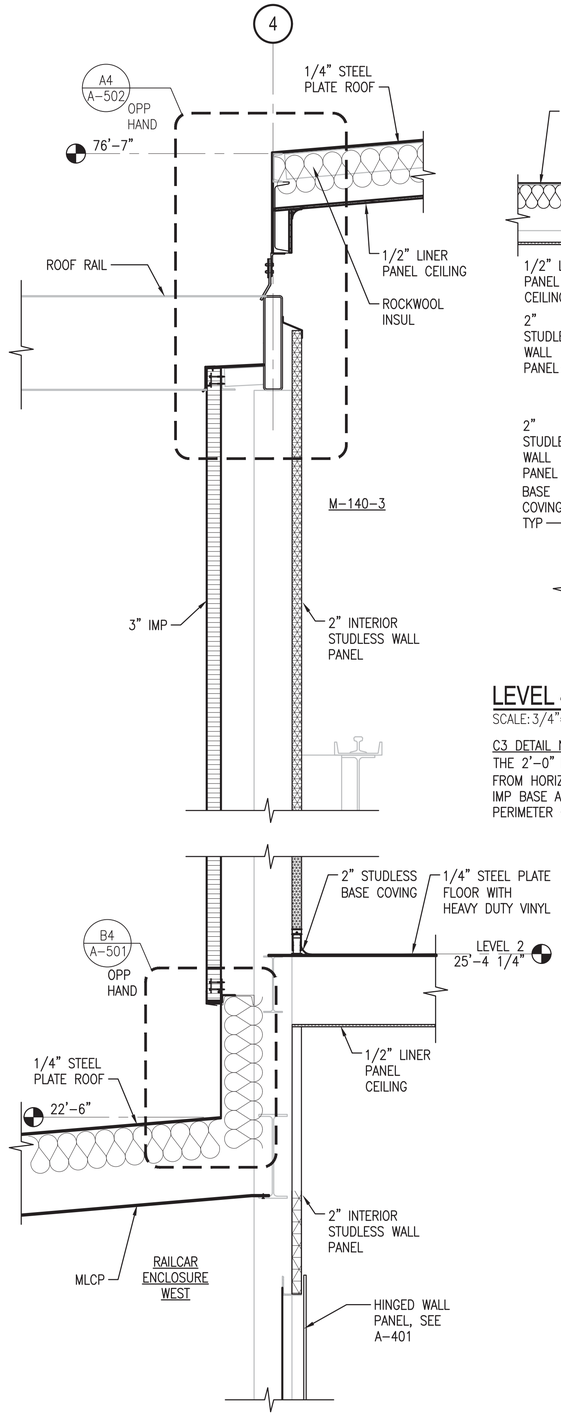

TOWER WALL TO ROOF EDGE (A2)

SCALE: 3/4"=1'-0" A-107, A-301, A-301A

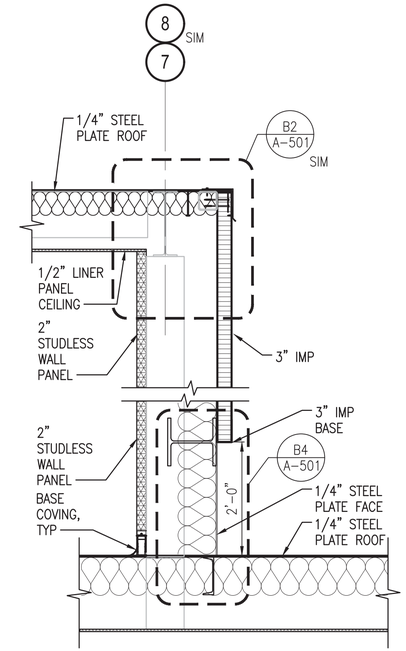

LEVEL 4 TO LEVEL 3 EXTERIOR WALL (C3)

SCALE: 3/4"=1'-0" A-301, A-301A, A-302

C3 DETAIL NOTE:
THE 2'-0" HIGH 1/4" MTL PLATE FACE, THAT ACTS AS TRANSITION FROM HORIZONTAL LOW SLOPE METAL PLATE ROOF TO VERTICAL 3" IMP BASE ABOVE, IS TO BE IMPLEMENTED AROUND ENTIRE U-SHAPED PERIMETER OF LOW ROOF ON LEVEL 3. SEE A-103.

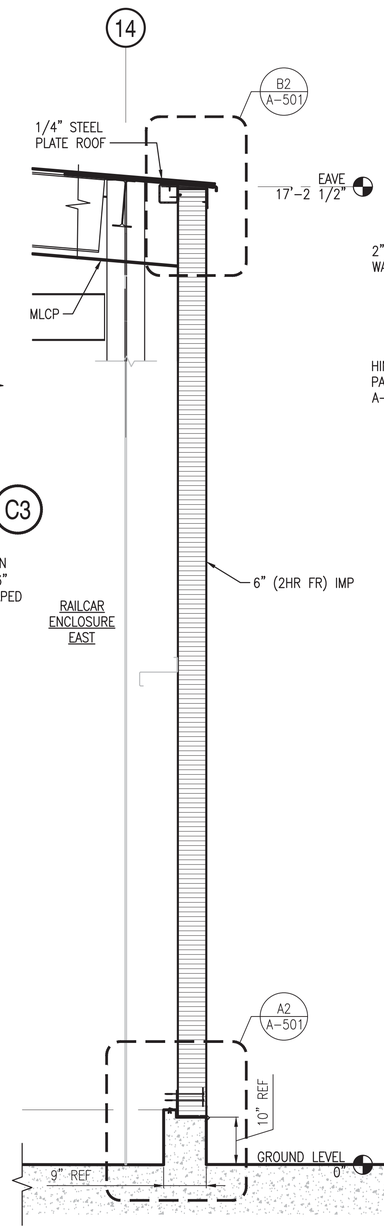

RAILCAR ENCLOSURE EAST WALL (A4)

SCALE: 3/4"=1'-0" A-301, A-301A

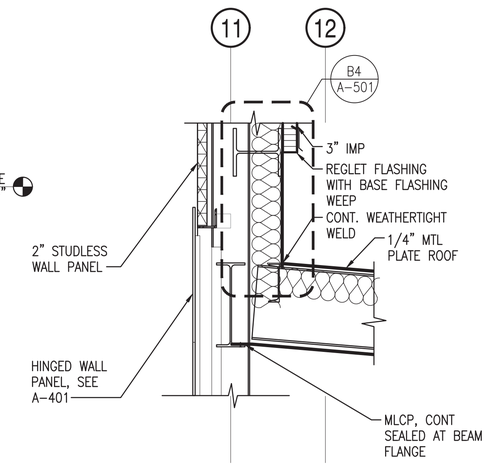

RAILCAR ENCLOSURE EAST WALL (C5)

SCALE: 3/4"=1'-0" A-301, A-301A

0 1' 2' 3'
Scale: 3/4" = 1'-0"

SYM	DESCRIPTION	DATE	APPR
0	ISSUED FOR CONSTRUCTION	10/28/2016	CBC

NAVFAC

REGISTERED ARCHITECT DONALD M. DYER No. 859 STATE OF MAINE 10/28/16

Colby Company engineering

A/E INFO

APPROVED David W. Thurnfield
FOR COMMANDER NAVFAC

ACTIVITY: TIM FISHER C. 2370.6 BRANCH HEAD

SATISFACTORY TO DATE 10/28/2016

DES GJN DRW GJN CHK DMD

PMDM PETER STOCKLESS

BRANCH MANAGER IAN BODWELL

FEA/PM&E AMIN BAHROUR

FIRE PROTECTION PATRICK BAKAJ

DEPARTMENT OF THE NAVY
NAVAL FACILITIES ENGINEERING COMMAND ~ MID-ATLANTIC
PUBLIC WORKS DEPARTMENT - MAINE
NAVAL FACILITIES ENGINEERING COMMAND
NAVAL SHIPYARD - PORTSMOUTH, NH
PORTSMOUTH NAVAL SHIPYARD
KITTERY, ME
DRY DOCK #1 DEFUELING COMPLEX
M-140 COMPLEX
WALL SECTIONS

EPROJECT NO.: 1363311

CONSTR. CONTR. NO. N40085-17-C-5002

NAVFAC DRAWING NO. 12734891

SHEET 108 OF 188

A-304 DD1-16-972

DRAWFORM REVISION: 10 OCTOBER 2014

10/28/2016 6:45:42 AM X:\297 PORTSMOUTH NAVAL SHIPYARD\297.005.001 - DD#1 DEFUELING COMPLEX DESIGN\DRAWINGS\M140\SHEETS\A-304.DWG

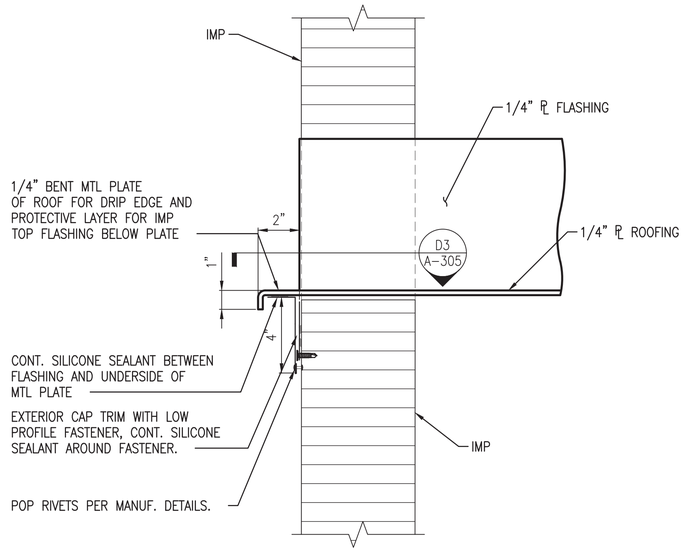

SECTION D1
SCALE: 3"=1'-0" A-305

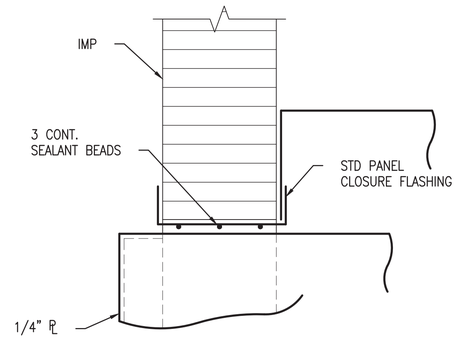

SECTION D3
SCALE: 3"=1'-0" A-305

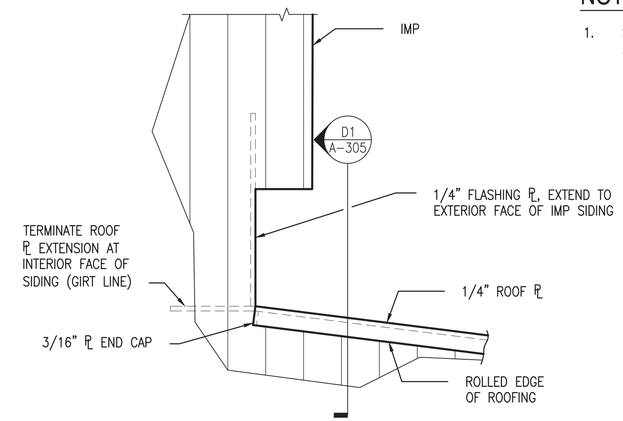

SECTION D4
SCALE: 3"=1'-0" A-201, A-201A, A-203

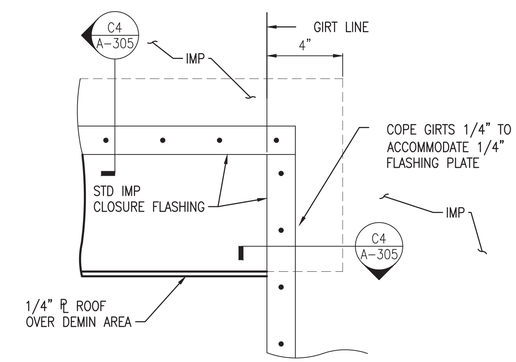

ELEVATION @ DEMIN ROOF/M140 TOWER C3
SCALE: 3"=1'-0" A-201, A-201A

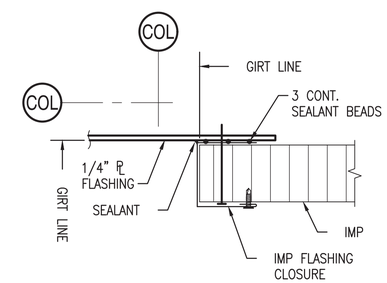

SECTION C4
SCALE: 3"=1'-0" A-305

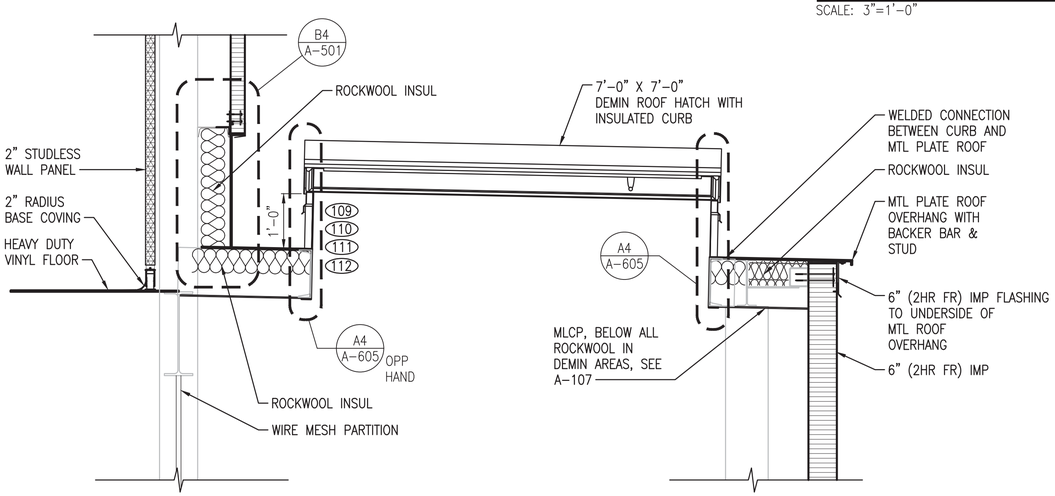

DEMIN ROOF HATCH SECTION A1
SCALE: 3/4"=1'-0" A-101, A-101A, A-107, A-602

NOTES

1. SEE DRAWING A-001 FOR GENERAL NOTES, ABBREVIATIONS AND LEGEND.

Scale: 3/4" = 1'-0"

SYM	DESCRIPTION	DATE	APPR
0	ISSUED FOR CONSTRUCTION	10/28/2016	CBC

NAVFAC

REGISTERED ARCHITECT DONALD M. DYER No. 859 STATE OF MAINE 10/28/16

Colby Company engineering

APPROVED David W. Thurnfield FOR COMMANDER NAVFAC

ACTIVITY: TIM FISHER C. 2370.6 BRANCH HEAD

SATISFACTORY TO DATE 10/28/2016

DES GJN DRW GJN CHK DMD

PM/DM PETER STOCKLESS

BRANCH MANAGER IAN BODWELL

FEAD/PM&E AMIN BAHROUR

FIRE PROTECTION PATRICK BAKAJ

DEPARTMENT OF THE NAVY
NAVAL FACILITIES ENGINEERING COMMAND
PUBLIC WORKS DEPARTMENT - MAINE

NAVAL FACILITIES ENGINEERING COMMAND ~ MID-ATLANTIC
NAVAL SHIPYARD - PORTSMOUTH, NH

PORTSMOUTH NAVAL SHIPYARD
KITTERY, ME

DRY DOCK #1 DEFUELING COMPLEX
M-140 COMPLEX

ARCHITECTURAL DETAILS

EPROJECT NO.: 1363311

CONSTR. CONTR. NO. N40085-17-C-5002

NAVFAC DRAWING NO. 12734892

SHEET 109 OF 188

A-305 DD1-16-973

DRAWFORM REVISION: 10 OCTOBER 2014

10/28/2016 6:45:52 AM X:\297 PORTSMOUTH NAVAL SHIPYARD\297.005.001 - DDH DEFUELING COMPLEX DESIGN\DRAWINGS\M140\SHEETS\A-305.DWG

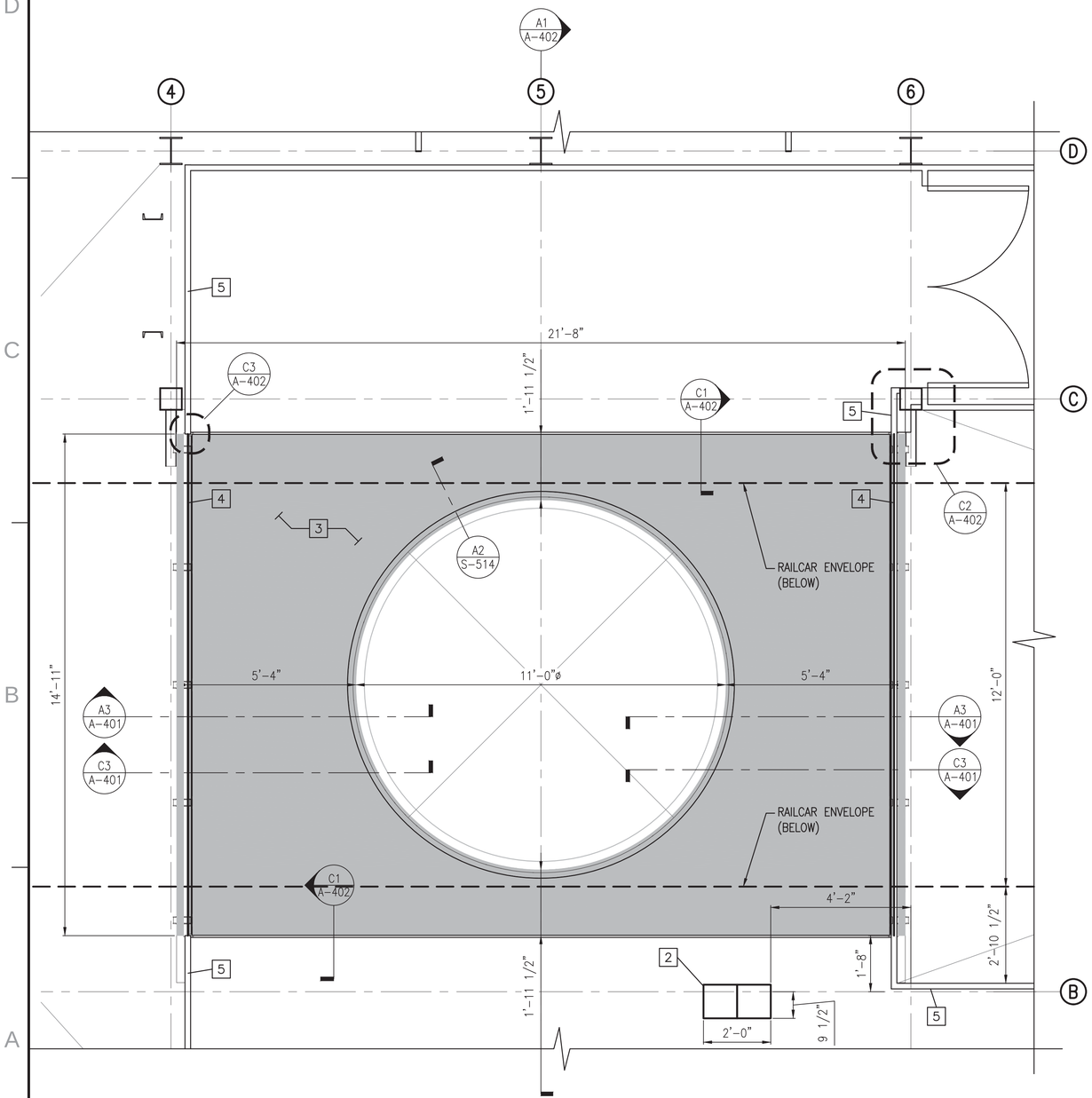

DECK INSERT ENLARGED PLAN

SCALE: 1/2"=1'-0" A-101, A-101A, A-301, A-301A, A-304 (A1)

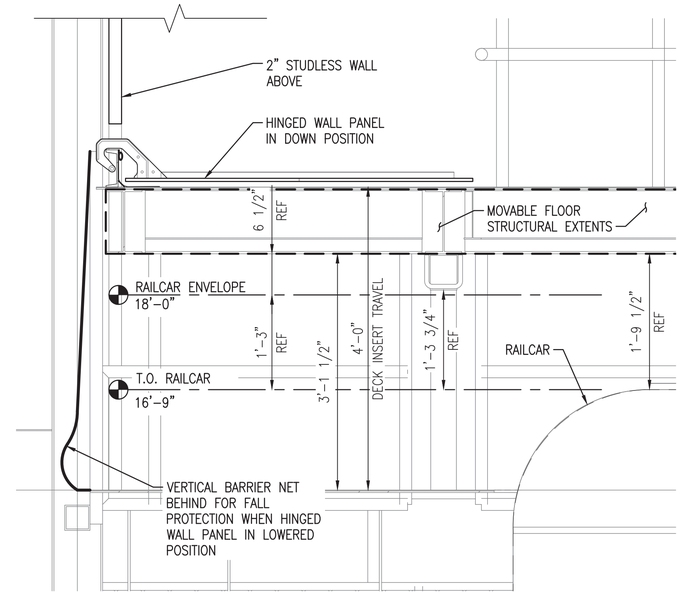

DECK INSERT IN RAISED POSITION WITH HINGED WALL SECTION LOWERED

SCALE: 1"=1'-0" A-401 (C3)

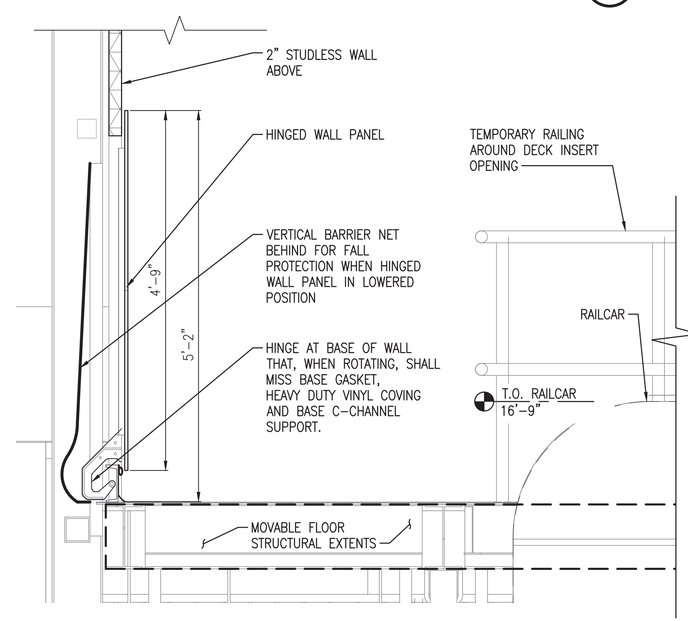

DECK INSERT IN LOWERED POSITION HINGED WALL SECTION UPRIGHT

SCALE: 1"=1'-0" A-401 (A3)

NOTES

1. SEE DRAWING A-001 FOR GENERAL NOTES, ABBREVIATIONS AND LEGEND.
2. DECK INSERT IS DESIGNED TO BE LIFTED APPROXIMATELY 4' USING THE IN-HOUSE BRIDGE CRANE TO ALLOW MOVEMENT OF A RAILCAR BENEATH.
3. DECK INSERT AND HINGED WALL PANEL DESIGN TO BE IDENTICAL WITHIN M-140-3 TOWER AND M-140-4 TOWER.

KEYED NOTES

1. 3" IMP
2. 5'-0" HIGH TOOL COLUMN PEDESTAL
3. DECK INSERT
4. 4'-0" HIGH HINGED WALL PANEL
5. 2" STUDLESS INTERIOR WALL SYSTEM

HINGED WALL PANEL NOTES

1. THE DECK INSERT IS A DESIGN ELEMENT THAT ALLOWS ACCESS TO THE RAILCARS VIA A WORKING PLATFORM. THIS DECK INSERT ALSO SERVES AS THE RADIOLOGICAL BOUNDARY BETWEEN THE GROUND LEVEL, WHERE THE RAILCAR IS LOCATED, AND THE UPPER LEVELS OF THE ENCLOSURE. BECAUSE OF THIS OPERATIONAL REQUIREMENT, IT IS ESSENTIAL THAT THE HINGED WALL PANEL AND DECK INSERT EDGES REMAIN SEALED AND AIRTIGHT TO THE GROUND LEVEL BELOW.
2. IN ORDER FOR THE M-140 RAILCARS TO ENTER THE STRUCTURE AND BE PUT INTO THEIR OPERATIONAL POSITION, THE DECK INSERT (SEE STRUCTURAL SHEET S-513) IS REQUIRED TO BE LIFTED UPWARDS 4FT IN ORDER TO CLEAR THE MAX HEIGHT OF THE RAILCAR AS IT ENTERS. THIS ALWAYS REQUIRES THAT THE WALL PORTIONS AT THE EAST AND WEST EDGES OF THE DECK INSERT BE MOVABLE IN ORDER TO ACCOMMODATE THE LIFT (C3/A-401). ONCE THE RAILCARS ARE IN PLACE, THE DECK INSERT IS LOWERED INTO POSITION AND THE HINGED WALL IS PUT INTO ITS SEALED, UPRIGHT POSITION (A3/A-401).

0 1/2' 1' 2'
Scale: 1" = 1'-0"
0 1' 2' 4'
Scale: 1/2" = 1'-0"

SYM	DESCRIPTION	DATE	APPR
0	ISSUED FOR CONSTRUCTION	10/28/2016	CBC

NAVFAC

REGISTERED ARCHITECT DONALD M. DYER No. 859 STATE OF MAINE 10/28/16

Colby Company engineering

A/E INFO

APPROVED: David W. Thurnfield
FOR COMMANDER NAVFAC

ACTIVITY: TIM FISHER C. 2370.6 BRANCH HEAD

SATISFACTORY TO DATE 10/28/2016

DES GJN | DRW GJN | CHK DMD

PM/DM PETER STOCKLESS

BRANCH MANAGER IAN BODWELL

FEAD/PM/AE AMIN BAHROUR

FIRE PROTECTION PATRICK BAKAJ

DEPARTMENT OF THE NAVY
NAVAL FACILITIES ENGINEERING COMMAND
PUBLIC WORKS DEPARTMENT - MAINE

NAVAL FACILITIES ENGINEERING COMMAND – MID-ATLANTIC
NAVAL SHIPYARD - PORTSMOUTH, NH

PORTSMOUTH NAVAL SHIPYARD
KITTERY, ME

DRY DOCK #1 DEFUELING COMPLEX
M-140 COMPLEX

MOVABLE FLOOR ENLARGED PLAN

EPROJECT NO.: 1363311

CONSTR. CONTR. NO. N40085-17-C-5002

NAVFAC DRAWING NO. 12734893

SHEET 110 OF 188

A-401 | DD1-16-974

DRAWFORM REVISION: 10 OCTOBER 2014

10/28/2016 6:46:05 AM X:\297 PORTSMOUTH NAVAL SHIPYARD\297.005.001 - DD#1 DEFUELING COMPLEX\DESIGN\DRAWINGS\M140\SHEETS\A-401.DWG

NOTES

1. SEE DRAWING A-001 FOR GENERAL NOTES, ABBREVIATIONS AND LEGEND.
2. HINGED WALL PANEL SHALL HAVE AN AIR TIGHT SEAL WHEN IN UPRIGHT AND LOCKED POSITION VIA TOP EDGE FASTENERS AND CONT. GASKETING ALONG THE PERIMETER.
3. ENSURE THAT HINGE DOES NOT INTERFERE WITH BASE HEAVY DUTY VINYL COVING, BOTTOM STRUCTURAL SUPPORT OR BOTTOM CONT BULB GASKET.

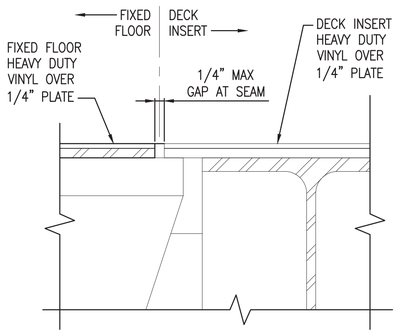

DECK INSERT EDGE ENLARGED SECTION (C1)

SCALE: 6"=1'-0" A-401, A-402

NOTE: SEE S-513 THROUGH S-516 FOR MORE INFORMATION

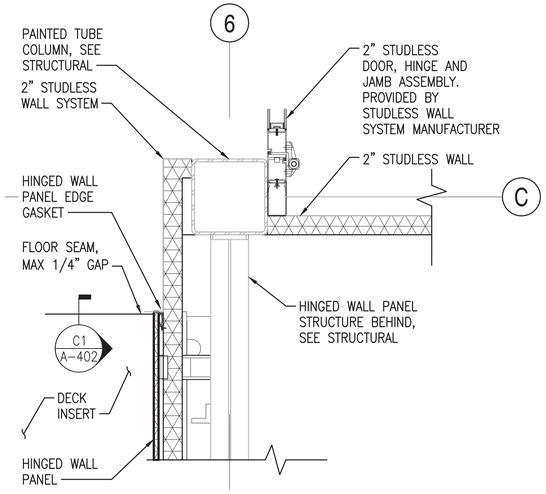

2" STUDLESS CORNER PLAN DETAIL (C2)

SCALE: 1 1/2"=1'-0" A-401

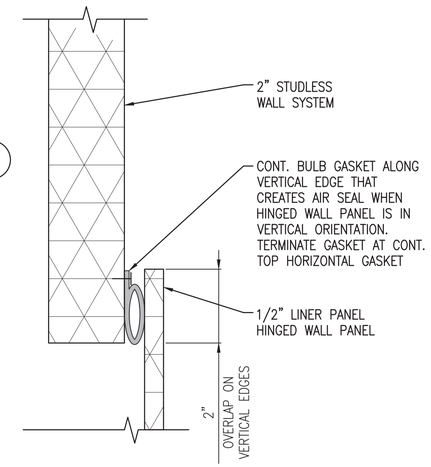

HINGED WALL EDGE PLAN SECTION (C3)

SCALE: 6"=1'-0" A-401, A-402

NOTE: OCCURS AT VERTICAL SEAMS

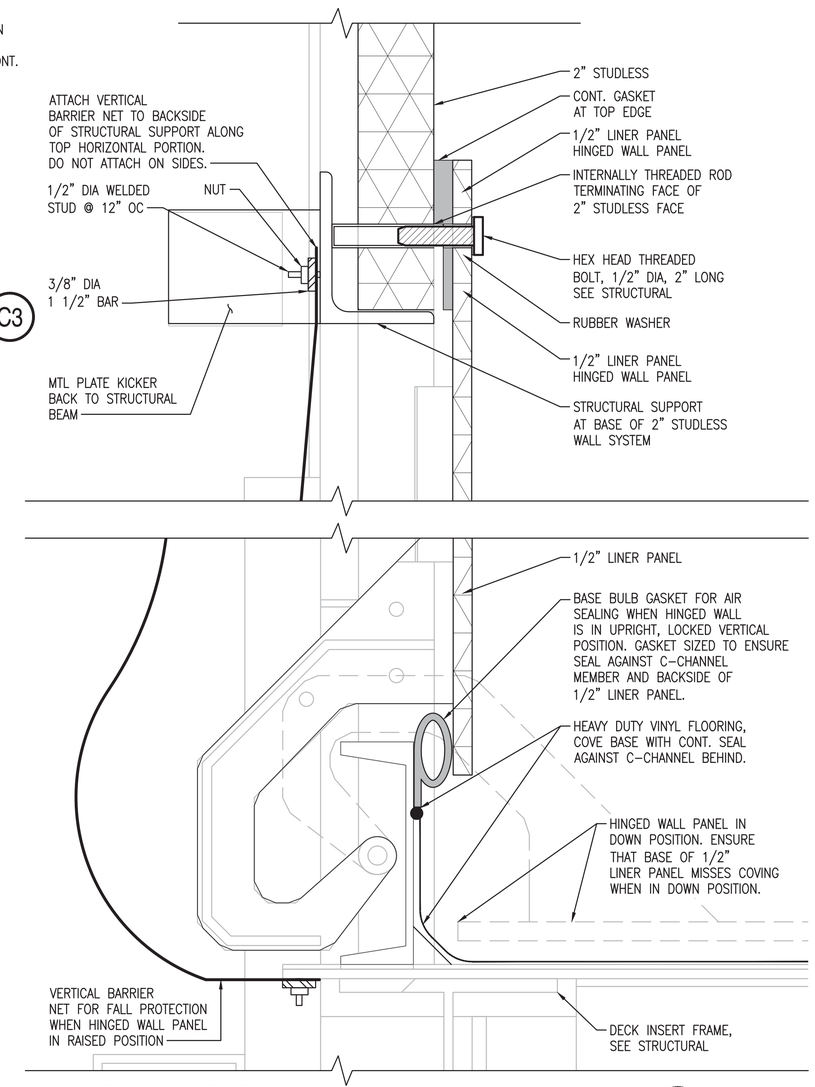

HINGED WALL SECTION (A4)

SCALE: 6"=1'-0" A-402

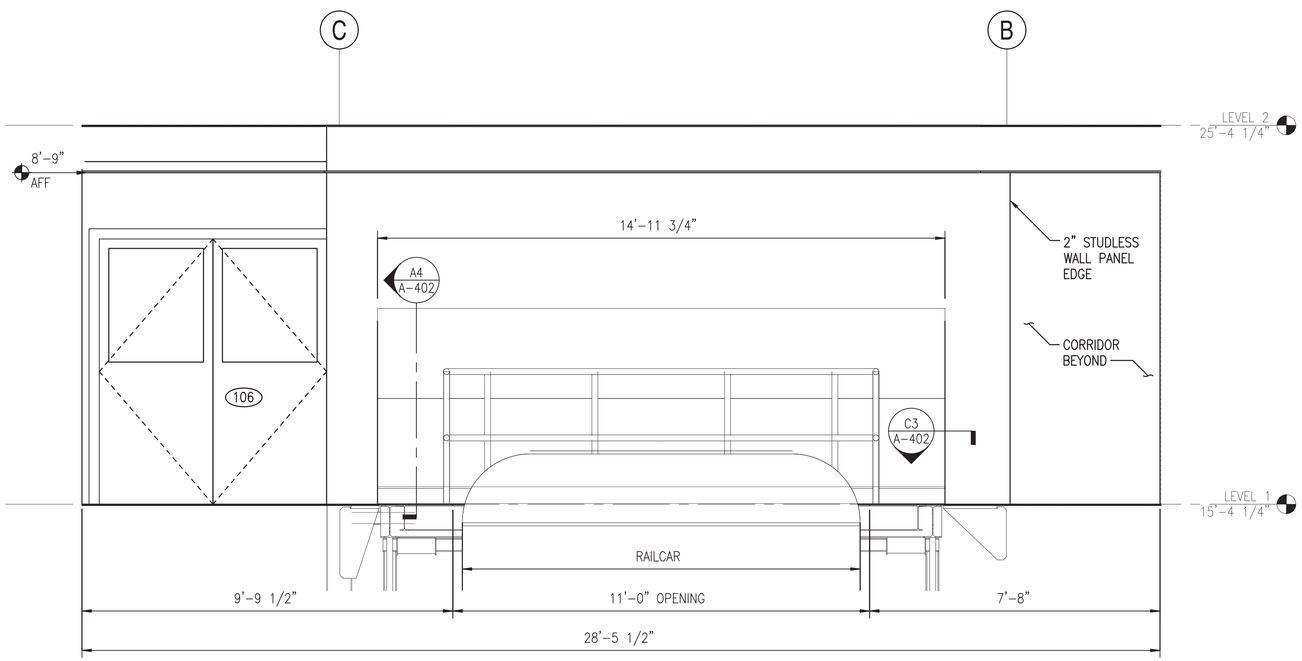

DECK INSERT AND FIXED FLOOR - SECTION (A1)

SCALE: 1/2"=1'-0" A-401

SYM	DESCRIPTION	DATE	APPR
0	ISSUED FOR CONSTRUCTION	10/28/2016	CBC

NAVFAC

REGISTERED ARCHITECT DONALD M. DYER No. 859 STATE OF MAINE 10/28/16

Colby Company engineering

A/E INFO

APPROVED David W. Thurnfield FOR COMMANDER NAVFAC

ACTIVITY TIM FISHER C. 2370.6 BRANCH HEAD

SATISFACTORY TO DATE 10/28/2016

DES GJN DRW GJN CHK DMD

PMDM PETER STOCKLESS

BRANCH MANAGER IAN BODWELL

FEAD/PM&E AMIN BAHROUR

FIRE PROTECTION PATRICK BAKAJ

DEPARTMENT OF THE NAVY
NAVAL FACILITIES ENGINEERING COMMAND ~ MID-ATLANTIC
PUBLIC WORKS DEPARTMENT - MAINE
NAVAL FACILITIES ENGINEERING COMMAND
NAVAL SHIPYARD - PORTSMOUTH, NH
PORTSMOUTH NAVAL SHIPYARD
KITTERY, ME
DRY DOCK #1 DEFUELING COMPLEX
M-140 COMPLEX
HINGED WALL PANEL ELEVATION AND DETAILS

EPROJECT NO.: 1363311

CONSTR. CONTR. NO. N40085-17-C-5002

NAVFAC DRAWING NO. 12734894

SHEET 111 OF 188

A-402 DD1-16-975

DRAWFORM REVISION: 10 OCTOBER 2014

Scale: 1 1/2" = 1'-0" (0, 1/2', 1', 1 1/2') Scale: 1/2" = 1'-0" (0, 1', 2', 4') Scale: 6" = 1'-0" (0, 6", 12", 18")

10/28/2016 6:46:23 AM X:\297 PORTSMOUTH NAVAL SHIPYARD\297.005.001 - DD#1 DEFUELING COMPLEX DESIGN\DRAWINGS\M140\SHEETS\A-402.DWG

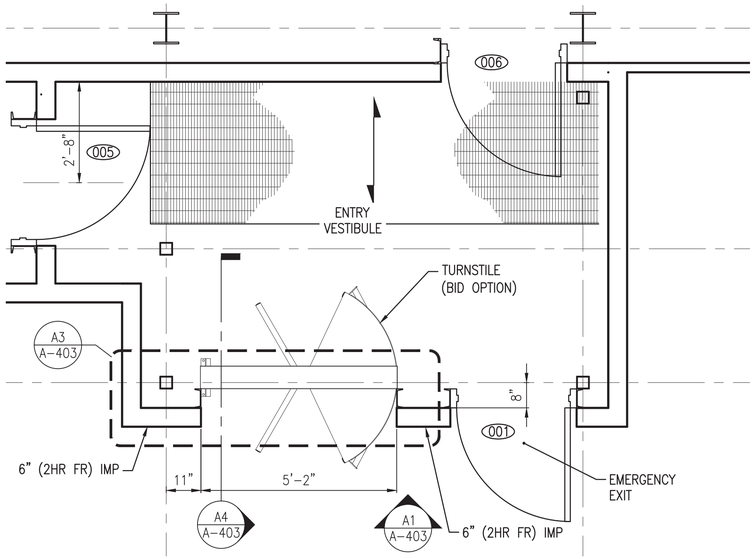

PARTIAL PLAN AT TURNSTILE

SCALE: 1/2"=1'-0" A-100, A-100A C1

NOTES

1. SEE DRAWING A-001 FOR GENERAL NOTES, ABBREVIATIONS AND LEGEND.

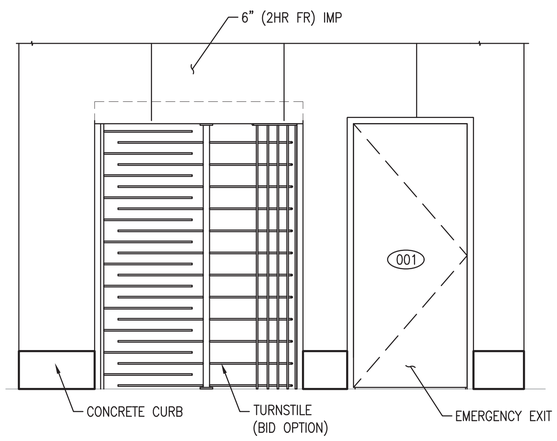

TURNSTILE ELEVATION

SCALE: 1/2"=1'-0" A-403 A1

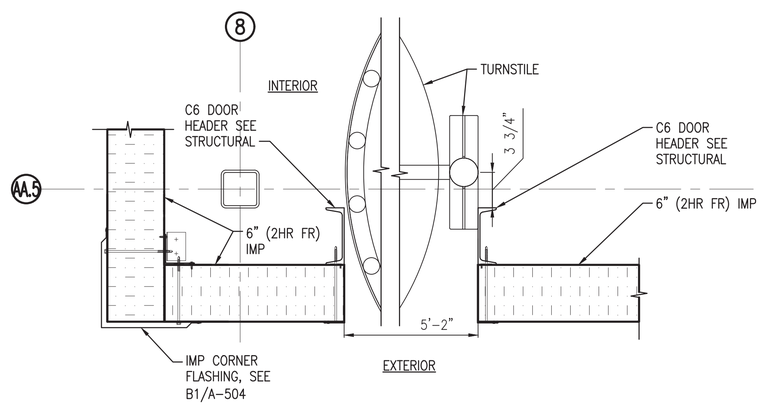

TURNSTILE JAMBS

SCALE: 1 1/2"=1'-0" A-403 A3

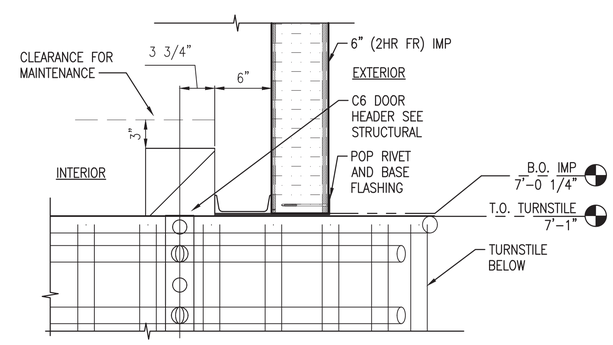

TURNSTILE HEADER

SCALE: 1 1/2"=1'-0" A-403 A4

0 1/2' 1' 1 1/2'
Scale: 1 1/2" = 1'-0"

0 1' 2' 4'
Scale: 1/2" = 1'-0"

SYM	DESCRIPTION	DATE	APPR
0	ISSUED FOR CONSTRUCTION	10/28/2016	CBC

NAVFAC

REGISTERED ARCHITECT
DONALD M. DYER
No. 859
STATE OF MAINE
10/28/16

Colby Company engineering

A/E INFO

APPROVED
David W. Thurnfield
FOR COMMANDER NAVFAC

ACTIVITY
TIM FISHER
C. 2370.6 BRANCH HEAD

SATISFACTORY TO DATE 10/28/2016

DES GJN DRW GJN CHK DMD

PMDM PETER STOCKLESS

BRANCH MANAGER IAN BODWELL

FEA/DPM/AE AMIN BAHROUR

FIRE PROTECTION PATRICK BAKAJ

DEPARTMENT OF THE NAVY
NAVAL FACILITIES ENGINEERING COMMAND
PUBLIC WORKS DEPARTMENT - MAINE

NAVAL FACILITIES ENGINEERING COMMAND ~ MID-ATLANTIC
NAVAL SHIPYARD - PORTSMOUTH, NH

PORTSMOUTH NAVAL SHIPYARD
KITTERY, ME

DRY DOCK #1 DEFUELING COMPLEX
M-140 COMPLEX

PARTIAL PLAN AND ELEVATION AT TURNSTILE

EPROJECT NO.: 1363311

CONSTR. CONTR. NO. N40085-17-C-5002

NAVFAC DRAWING NO. 12734895

SHEET 112 OF 188

A-403 DD1-16-976

DRAWFORM REVISION: 10 OCTOBER 2014

10/28/2016 6:46:30 AM X:\297 PORTSMOUTH NAVAL SHIPYARD\297.005.001 - DD#1 DEFUELING COMPLEX DESIGN\DRAWINGS\M140\SHEETS\A-403.DWG

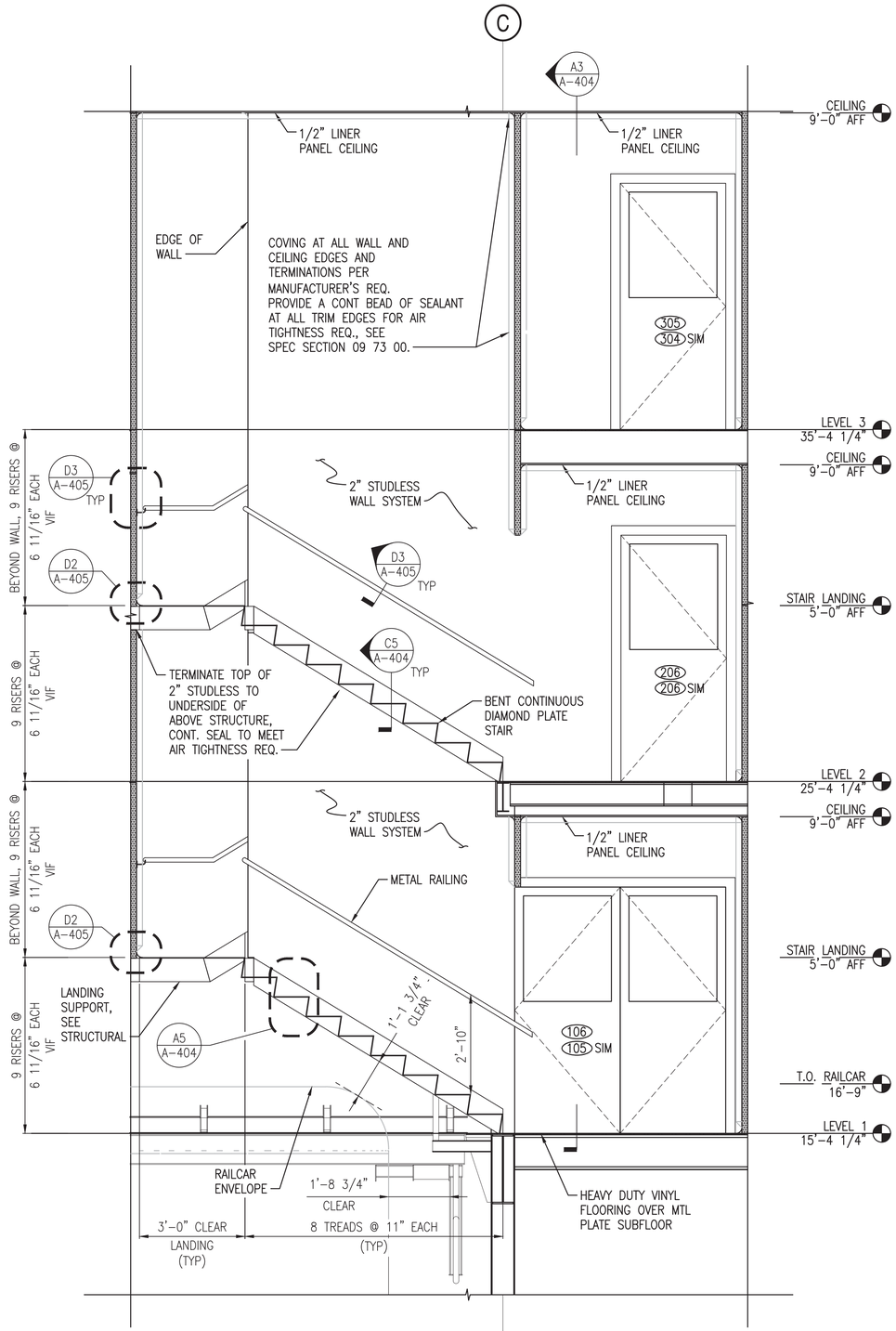

AIRTIGHT INTERIOR STAIRWELL SECTION (TYP BOTH STAIRWELLS)

SCALE: 1/2"=1'-0" A-101, A-101A, A-405 (A1)

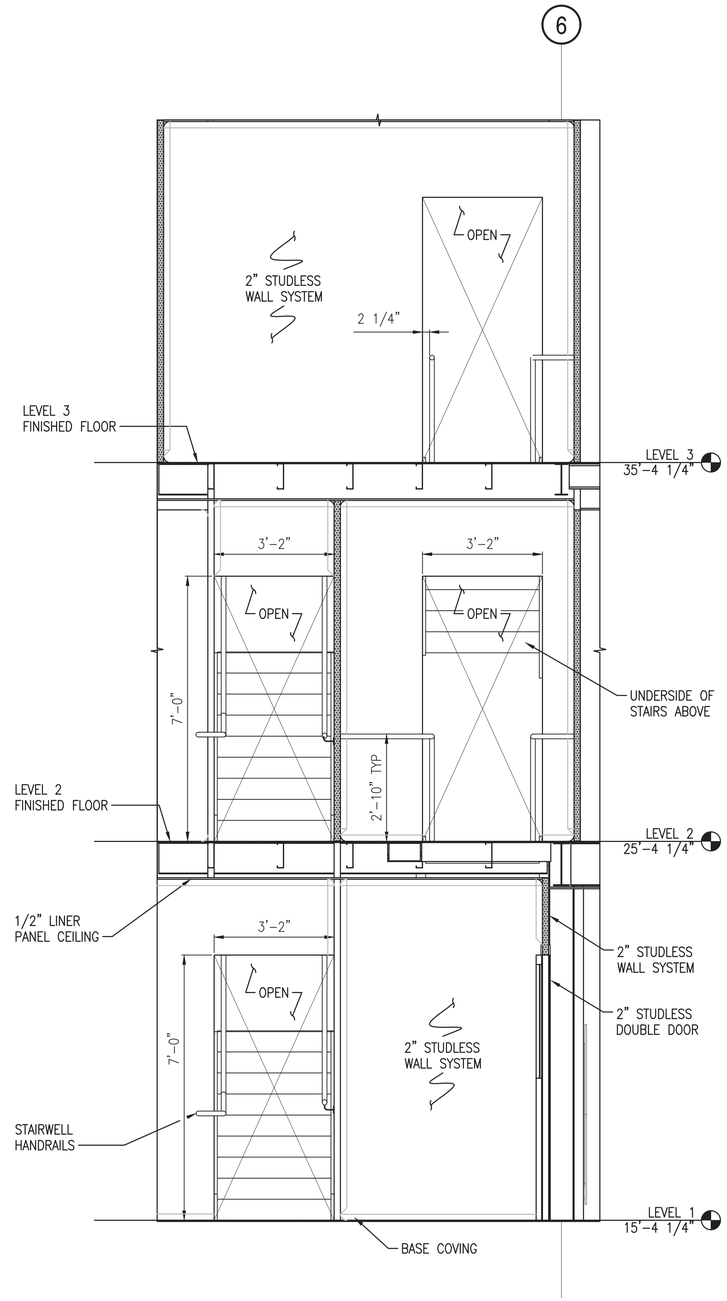

AIRTIGHT INTERIOR STAIRWELL SECTION

SCALE: 1/2"=1'-0" A-404, A-405 (A3)

NOTES

1. SEE DRAWING A-001 FOR GENERAL NOTES, ABBREVIATIONS AND LEGEND.
2. DESIGN INTENT – BOTTOM OF STAIR TO BE SEALED AIRTIGHT TO GROUND LEVEL. THIS WILL BE ACCOMPLISHED VIA CONT. WELDING OF STAIR TREADS TO EACH OTHER, CONT. WELD OF STAIR TREADS TO STRINGERS AND CONT. SEALED BASE/TOP TERMINATIONS OF 2" STUDLESS WALL SYSTEM TO STRINGERS AND LANDING STRUCTURE AT TOP AND BOTTOM.
3. ALL HANDRAILS TO HAVE WELDED END CAPS OR TERMINATE FLUSH AGAINST WALL FACE IN ORDER TO PROHIBIT AIRFLOW WITHIN INTERIOR OF SCHEDULED HANDRAIL PIPE.
4. ALL HANDRAIL TO BE 34" (2'-10") AFF AND ABOVE SLOPE OF NOSE OF STAIR.

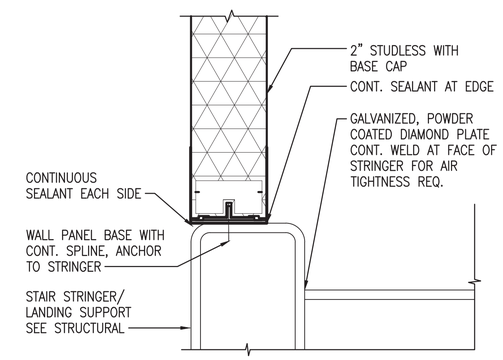

TYP. 2" STUDLESS AT STAIR STRINGER DTL

SCALE: 6"=1'-0" A-404, A-405 (C5)

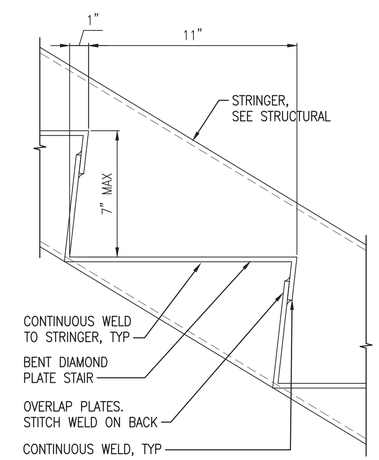

AIRTIGHT STAIR DETAIL

SCALE: 3"=1'-0" A-404 (A5)

SYM	DESCRIPTION	DATE	APPR
0	ISSUED FOR CONSTRUCTION	10/28/2016	CBC

NAVFAC

REGISTERED ARCHITECT DONALD M. DYER No. 859 STATE OF MAINE 10/28/16

Colby Company engineering

A/E INFO

APPROVED: David W. Thurnfield
FOR COMMANDER NAVFAC

ACTIVITY: TIM FISHER, C. 2370.6 BRANCH HEAD

SATISFACTORY TO DATE 10/28/2016

DES	GJN	DRW GJN	CHK DMD
PMDM	PETER STOCKLESS		
BRANCH MANAGER	IAN BODWELL		
FEAD/PM&E	AMIN BAHROUR		
FIRE PROTECTION	PATRICK BAKAJ		

DEPARTMENT OF THE NAVY
NAVAL FACILITIES ENGINEERING COMMAND
PUBLIC WORKS DEPARTMENT - MAINE

NAVAL FACILITIES ENGINEERING COMMAND ~ MID-ATLANTIC
NAVAL SHIPYARD - PORTSMOUTH, NH

PORTSMOUTH NAVAL SHIPYARD
KITTERY, ME

DRY DOCK #1 DEFUELING COMPLEX
M-140 COMPLEX

INTERIOR STAIRWELL SECTIONS AND DETAILS

EPROJECT NO.: 1363311

CONSTR. CONTR. NO.: N40085-17-C-5002

NAVFAC DRAWING NO.: 12734896

SHEET 113 OF 188

A-404 | DD1-16-977

Scale: 1/2" = 1'-0" (0, 1', 2', 4')
Scale: 3" = 1'-0" (0, 3", 6", 9")
Scale: 6" = 1'-0" (0, 6", 12", 18")

DRAWFORM REVISION: 10 OCTOBER 2014

10/28/2016 6:46:35 AM X:\297 PORTSMOUTH NAVAL SHIPYARD\297.005.001 - DD#1 DEFUELING COMPLEX DESIGN\DRAWINGS\M140\SHEETS\A-404.DWG

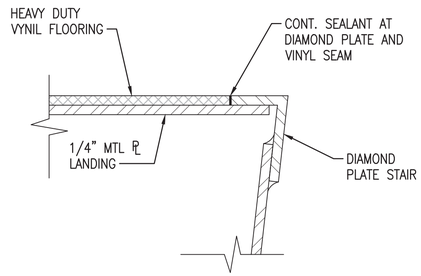

TYP DIAMOND PLATE/VINYL FLOORING SEAM SECTION (D1)

SCALE: 6"=1'-0" A-405

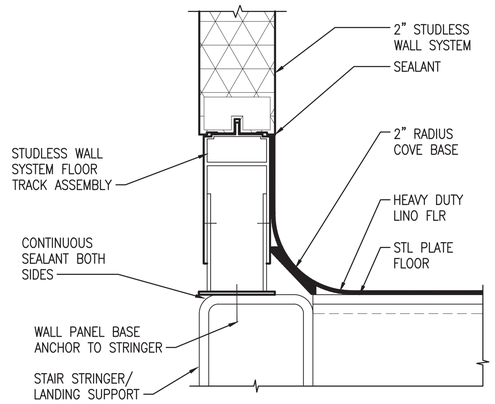

TYP 2" STUDLESS WALL SYSTEM BASE AT LANDING DTL (D2)

SCALE: 6"=1'-0" A-404, A-405

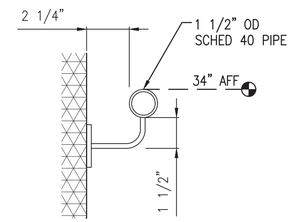

HANDRAIL TO BE SECURED TO 2" STUDLESS WALL VIA HANDRAIL BRACKET AT 4'-0" O.C. WITH RIVNUT FASTENERS AND BE ABLE TO SUPPORT 200LB IN ANY DIRECTION. 34" AFF OF LANDING OR NOSE TO NOSE SLOPE OF STAIRWELL.

TYP HANDRAIL SECTION (D3)

SCALE: 3"=1'-0" A-404

NOTES

1. SEE DRAWING A-001 FOR GENERAL NOTES, ABBREVIATIONS AND LEGEND.
2. BOTTOM OF STAIR TO BE SEALED AIRTIGHT TO GROUND LEVEL. THIS WILL BE ACCOMPLISHED VIA CONT. WELDING OF STAIR TREADS TO EACH OTHER, CONT. WELD OF STAIR TREADS TO STRINGERS AND CONT. SEALED BASE/TOP TERMINATIONS OF 2" STUDLESS WALL SYSTEM TO STRINGERS AND LANDING STRUCTURE AT TOP AND BOTTOM.
3. ALL HANDRAILS TO HAVE WELDED END CAPS OR TERMINATE FLUSH AGAINST WALL FACE IN ORDER TO PROHIBIT AIRFLOW WITHIN INTERIOR OF SCHEDULED HANDRAIL PIPE.
4. ALL HANDRAIL TO BE 34" (2'-10") AFF AND ABOVE SLOPE OF NOSE OF STAIR.
5. DOOR NUMBERS ARE ONLY SHOWN FOR M140-3. M140-4 STAIRWELL SHALL BE CONSIDERED TYPICAL.

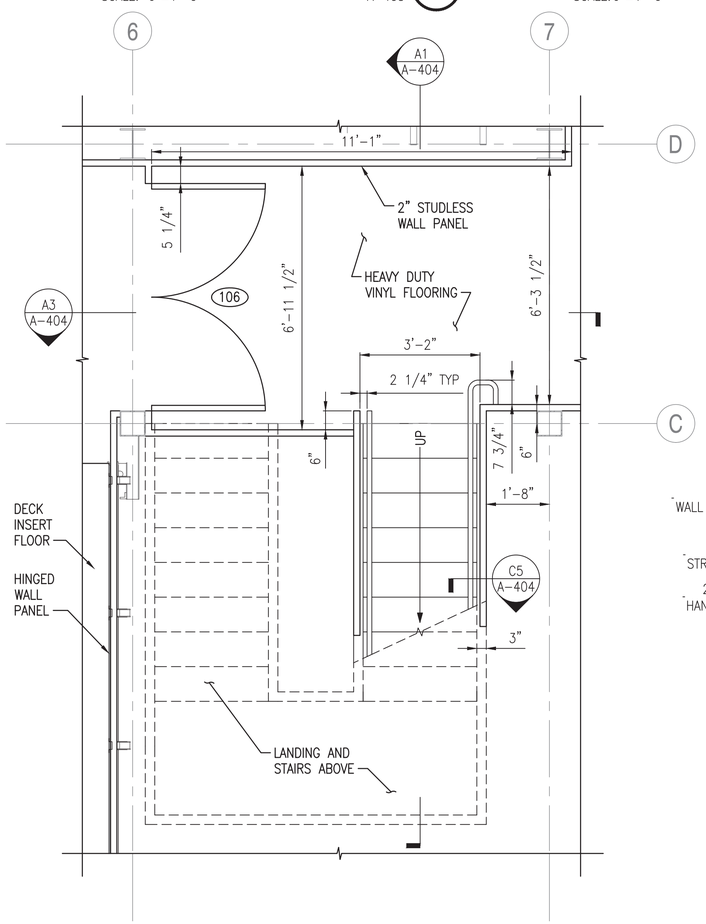

PART PLAN - LEVEL 1 INTERIOR STAIRWELL (A1)

SCALE: 1/2"=1'-0" A-101, A-101A

NOTE: TYP @ BOTH STAIR TOWERS

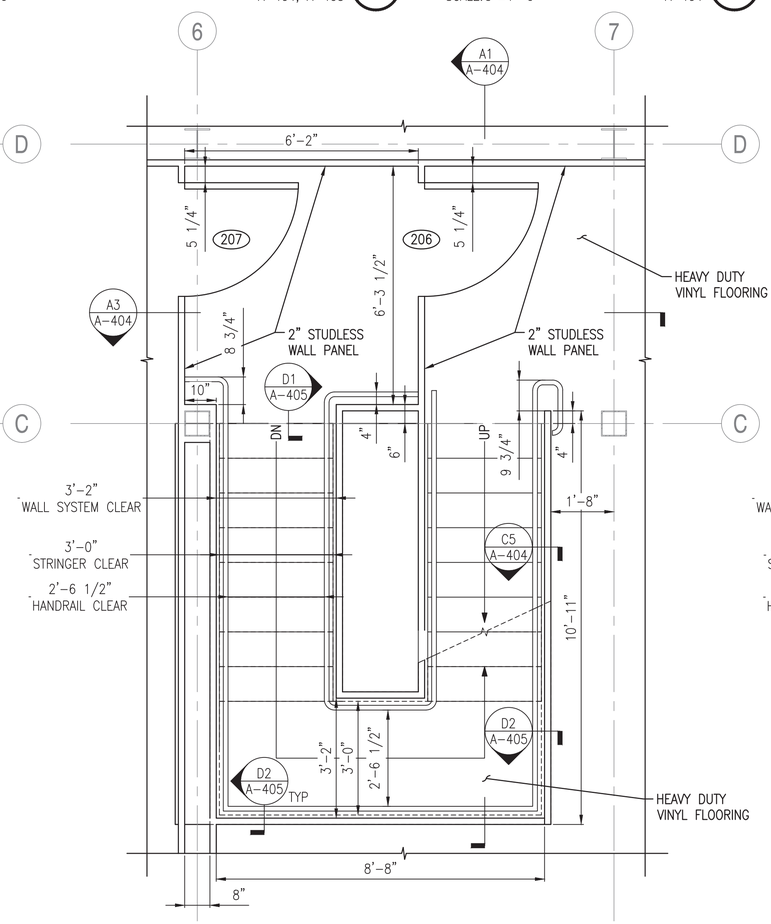

PART PLAN - LEVEL 2 INTERIOR STAIRWELL (A3)

SCALE: 1/2"=1'-0" A-102

NOTE: TYP @ BOTH STAIR TOWERS

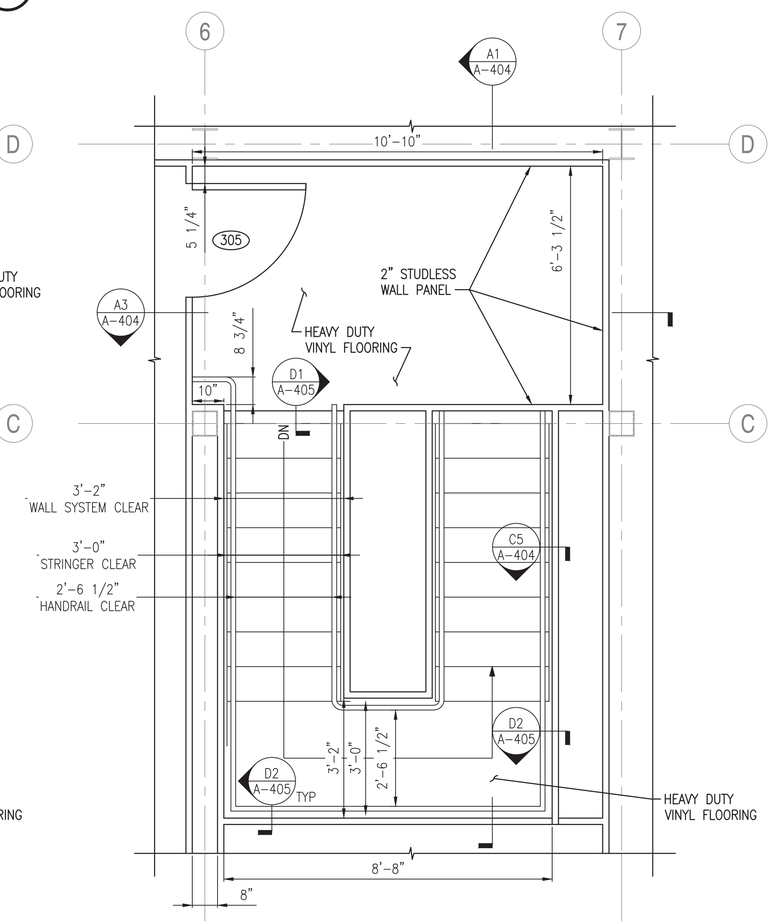

PART PLAN - LEVEL 3 INTERIOR STAIRWELL (A5)

SCALE: 1/2"=1'-0" A-103

NOTE: TYP @ BOTH STAIR TOWERS

Scale: 1/2" = 1'-0"

SYM	DESCRIPTION	DATE	APPR
0	ISSUED FOR CONSTRUCTION	10/28/2016	CBC

NAVFAC

REGISTERED ARCHITECT DONALD M. DYER No. 859 STATE OF MAINE 10/28/16

Colby Company engineering

APPROVED David W. Trumfield
FOR COMMANDER NAVFAC

ACTIVITY: TIM FISHER, C. 2370.6 BRANCH HEAD

SATISFACTORY TO DATE 10/28/2016

DES GJN | DRW GJN | CHK DMD

PMDM: PETER STOCKLESS

BRANCH MANAGER: IAN BODWELL

FEAD/P&E: AMIN BAHROUR

FIRE PROTECTION: PATRICK BAKAJ

DEPARTMENT OF THE NAVY
NAVAL FACILITIES ENGINEERING COMMAND
PUBLIC WORKS DEPARTMENT - MAINE

NAVAL FACILITIES ENGINEERING COMMAND ~ MID-ATLANTIC
NAVAL SHIPYARD: PORTSMOUTH, NH

PORTSMOUTH NAVAL SHIPYARD
DRY DOCK #1 DEFUELING COMPLEX
M-140 COMPLEX
KITTERY, ME

PART PLANS – INTERIOR STAIRS

EPROJECT NO.: 1363311

CONSTR. CONTR. NO. N40085-17-C-5002

NAVFAC DRAWING NO. 12734897

SHEET 114 OF 188

A-405 | DD1-16-978

DRAWFORM REVISION: 10 OCTOBER 2014

10/28/2016 6:46:41 AM X:\297 PORTSMOUTH NAVAL SHIPYARD\297.005.001 - DD#1 DEFUELING COMPLEX DESIGN\DRAWINGS\M140\SHEETS\A-405.DWG

NOTES

1. SEE DRAWING A–001 FOR GENERAL NOTES, ABBREVIATIONS AND LEGEND.
2. FOR SECURITY REQUIREMENTS, WIRE MESH FENCE AROUND DEMIN AREAS TO HAVE NO OPENINGS GREATER THAN 96 SQUARE INCHES AT ANY LOCATION. ALL FRAMING MEMBERS ARE TO DIRECTLY ABUT ADJACENT ENCLOSURE FRAMING MEMBERS AND BE WELDED AT THESE JOINTS.
3. SEE SPECIFICATION SECTION 10 22 13 FOR ADDITIONAL INFORMATION ABOUT THE WIRE MESH PARTITION SYSTEM.
4. DETAILS SHALL BE CONSIDERED TYPICAL FOR DEMIN AREA AT M140–4.

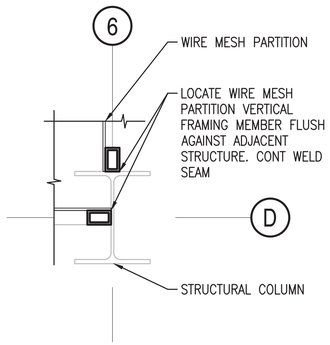

PLAN DETAIL AT CORNER (C1)
SCALE: 1–1/2"=1'–0" A–406

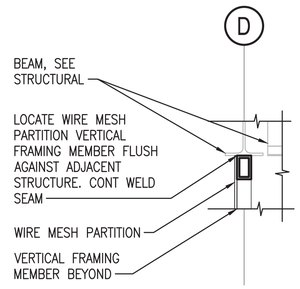

SECTION AT HEADER OF WIRE MESH PARTITION (C2)
SCALE: 1–1/2"=1'–0" A–406

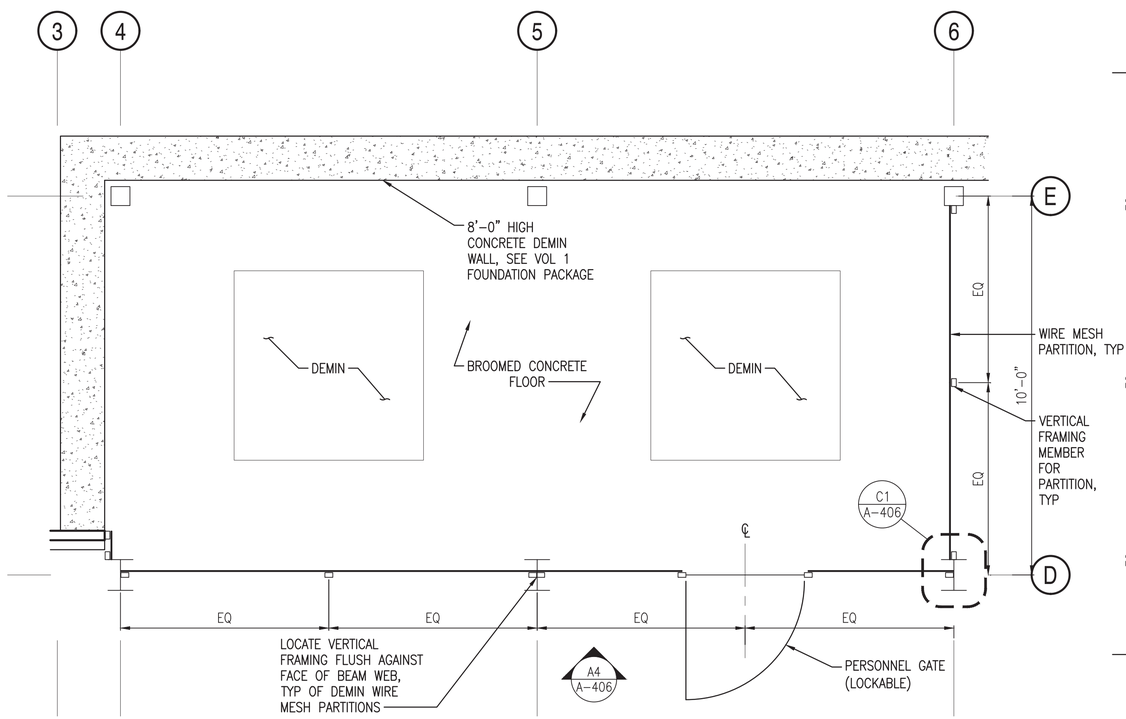

DEMIN WIRE MESH PARTITION SOUTH INTERIOR ELEVATION (M-140-3) (A2)
SCALE: 1/2"=1'–0" A–100, A–100A

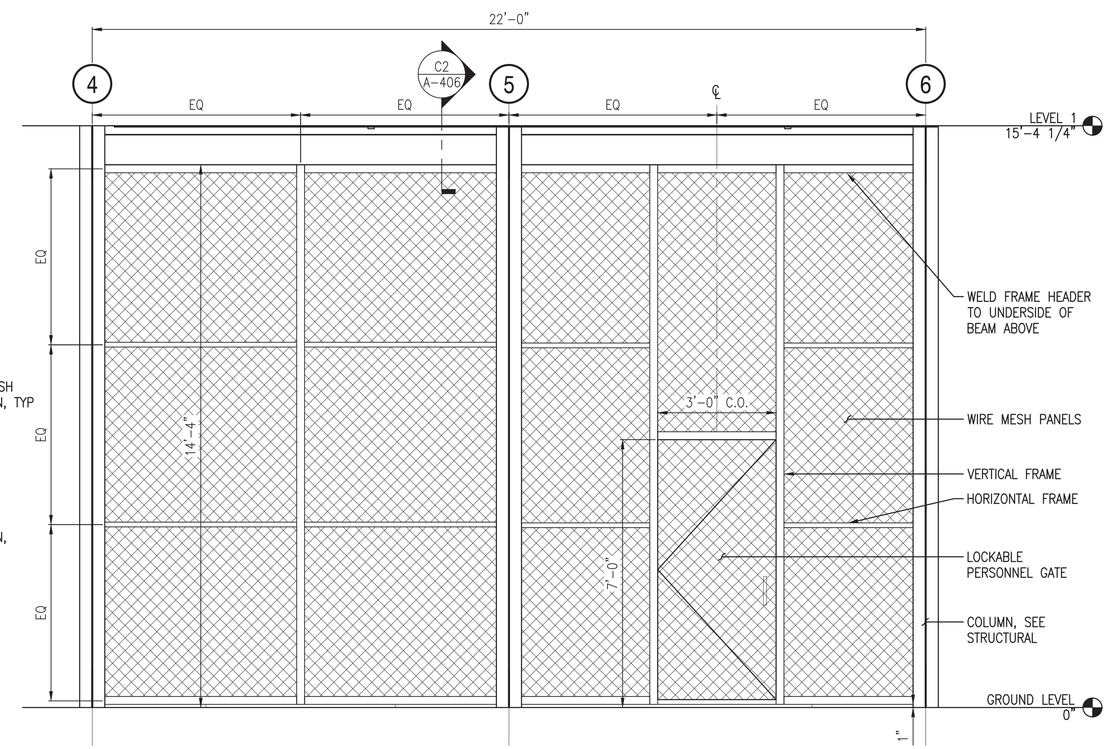

DEMIN WIRE MESH PARTITION SOUTH INTERIOR ELEVATION (M-140-3) (A4)
SCALE: 1/2"=1'–0" A–406

0 1' 2' 4'
Scale: 1/2" = 1'–0"

SYM	DESCRIPTION	DATE	APPR
0	ISSUED FOR CONSTRUCTION	10/28/2016	CBC

NAVFAC

REGISTERED ARCHITECT
DONALD M. DYER
No. 859
STATE OF MAINE
10/28/16

Colby Company engineering
A/E INFO

APPROVED
David W. Thurnfield
FOR COMMANDER NAVFAC

ACTIVITY
TIM FISHER
C. 2370.6 BRANCH HEAD

SATISFACTORY TO DATE 10/28/2016
DES GJN DRW GJN CHK DMD
PMDM PETER STOCKLESS
BRANCH MANAGER IAN BODWELL
FEA/DPMAE AMIN BAHROUR
FIRE PROTECTION PATRICK BAKAJ

DEPARTMENT OF THE NAVY
NAVAL FACILITIES ENGINEERING COMMAND
PUBLIC WORKS DEPARTMENT - MAINE
NAVAL FACILITIES ENGINEERING COMMAND ~ MID-ATLANTIC
NAVAL SHIPYARD - PORTSMOUTH, NH
PORTSMOUTH NAVAL SHIPYARD
KITTERY, ME
DRY DOCK #1 DEFUELING COMPLEX
M-140 COMPLEX
DEMIN WIRE MESH PARTITION PLAN AND ELEVATION

EPROJECT NO.: 1363311
CONSTR. CONTR. NO. N40085-17-C-5002
NAVFAC DRAWING NO. 12734898
SHEET 115 OF 188
A-406 DD1-16-979

DRAWFORM REVISION: 10 OCTOBER 2014

10/28/2016 6:46:46 AM X:\297 PORTSMOUTH NAVAL SHIPYARD\297.005.001 - DD#1 DEFUELING COMPLEX DESIGN\DRAWINGS\M140\SHEETS\A-406.DWG

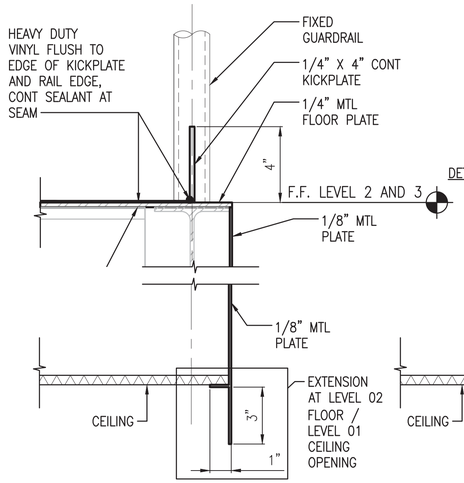

DETAIL NOTES:
EXTENSION OF PLATE BELOW FACES OF OPENING INTENDED TO ASSIST IN HVAC AIRFLOW CIRCULATION BY DIRECTING FLOW TO APPROPRIATE AREAS OF THE STRUCTURE.

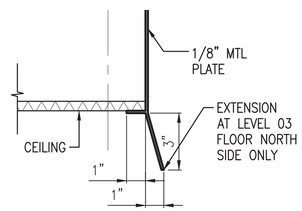

FLOOR OPENING EDGE (C1)
SCALE: 3"=1'-0" A-102, A-103

FLOOR OPENING EDGE (C2)
SCALE: 3"=1'-0" A-103

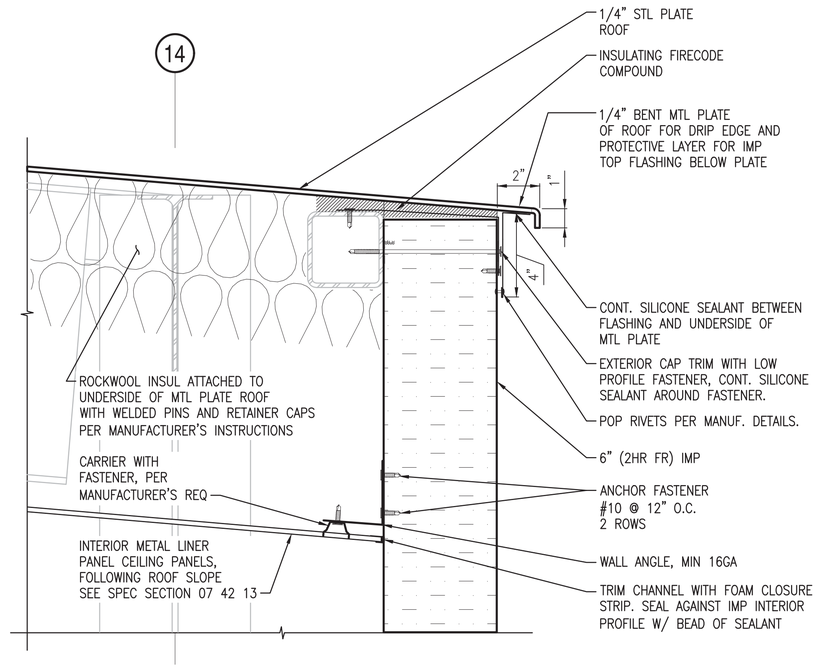

6" (2HR FR) IMP TO 1/4" STL PLATE DETAIL (B2)
SCALE: 3"=1'-0" A-303, A-304

DETAIL NOTE:
THE METAL PLATE ROOF DRIP EDGE AND IMP FLASHING AS SHOWN IN THIS DETAIL TO BE "TYPICAL" FLASHING CONDITION FOR ALL METAL PLATE ROOF TO IMP WALL CONDITIONS THROUGHOUT VOL. 2.

NOTES

1. SEE DRAWING A-001 FOR GENERAL NOTES, ABBREVIATIONS AND LEGEND.
2. UNLESS STATED OTHERWISE, FASTENER AND POP RIVET SPACING PER MANUFACTURER'S STANDARD REQUIREMENTS.
3. DETAILS A4 AND B4 ON THIS SHEET TO APPLY TO ALL CONDITIONS WHERE PLATE ROOF MEETS EXTERIOR IMP PANEL INCLUDING RAILCAR ENCLOSURE ROOF EDGE, DEMIN ROOF EDGE, STORAGE AREA ROOF EDGE AND LEVEL 3 ROOF EDGES. INTENT OF DESIGN IS ELIMINATE ANY WATER INFILTRATION DUE TO STANDING WATER OR ICE BUILDUP IN LOW SLOPE ROOF CONDITIONS.

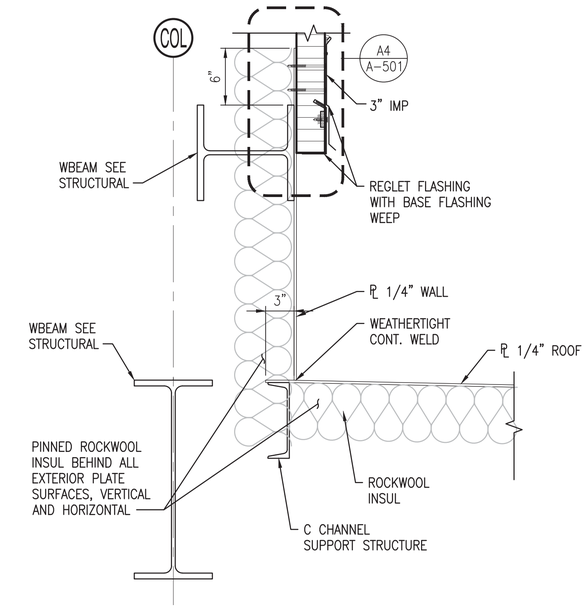

MTL PLATE ROOF TO IMP WALL JOINT (B4)
SCALE: 1 1/2"=1'-0" A-202, A-202A, A-303, A-304, A-305

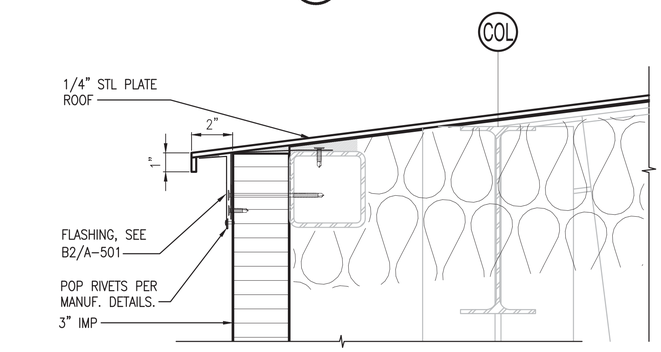

3" IMP TO 1/4" STL PLATE ROOFING DETAIL (B1)
SCALE: 3"=1'-0" A-303, A-304

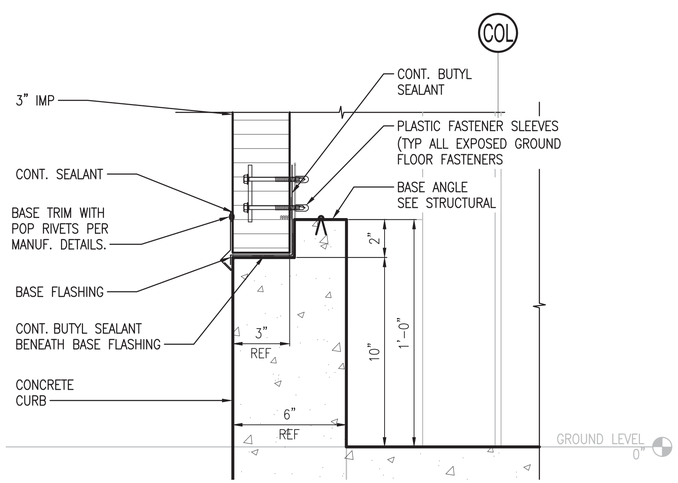

WALL BASE 3" IMP (NOTCHED) (A1)
SCALE: 3"=1'-0" A-303

NOTE:
STRUCTURAL DIMENSIONS ARE FOR REFERENCE ONLY.

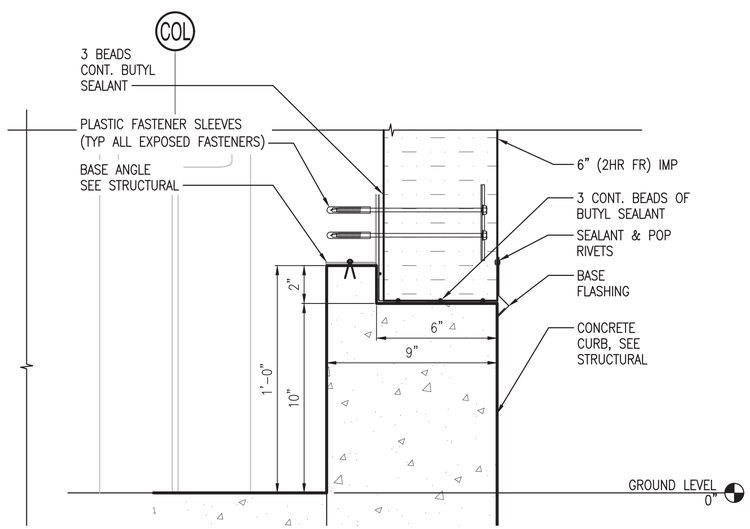

WALL BASE 6" (2HR FR) IMP (NOTCHED) (A2)
SCALE: 3"=1'-0" A-303, A-304

NOTE:
STRUCTURAL DIMENSIONS ARE FOR REFERENCE ONLY.

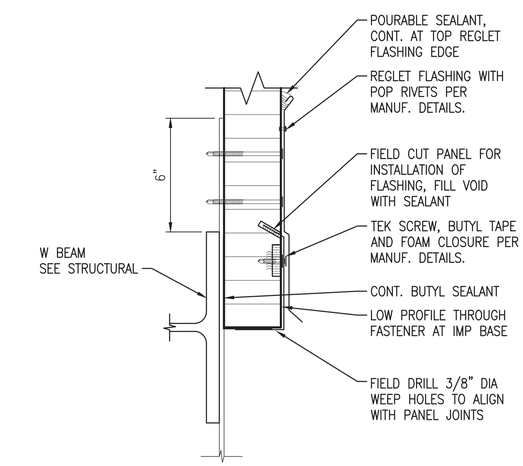

MTL PLATE ROOF TO IMP WALL JOINT (A4)
SCALE: 3"=1'-0" A-501, A-506

Scale: 1 1/2" = 1'-0" (0, 1/2', 1', 1 1/2')
Scale: 3" = 1'-0" (0, 3", 6", 9")

SYM	DESCRIPTION	DATE	APPR
0	ISSUED FOR CONSTRUCTION	10/28/2016	CBC

NAVFAC

REGISTERED ARCHITECT DONALD M. DYER No. 859 STATE OF MAINE 10/28/16

Colby Company engineering

APPROVED: David W. Thurnfield
FOR COMMANDER NAVFAC
ACTIVITY: TIM FISHER C. 2370.6 BRANCH HEAD
SATISFACTORY TO DATE 10/28/2016
DES GJN DRW GJN CHK DMD
PMDM PETER STOCKLESS
BRANCH MANAGER IAN BODWELL
FEA/PM&E AMIN BAHROUR
FIRE PROTECTION PATRICK BAKAJ

DEPARTMENT OF THE NAVY
NAVAL FACILITIES ENGINEERING COMMAND
PUBLIC WORKS DEPARTMENT - MAINE
NAVAL FACILITIES ENGINEERING COMMAND ~ MID-ATLANTIC
NAVAL SHIPYARD - PORTSMOUTH, NH
PORTSMOUTH NAVAL SHIPYARD
KITTERY, ME
DRY DOCK #1 DEFUELING COMPLEX
M-140 COMPLEX
ARCHITECTURAL DETAILS

EPROJECT NO.: 1363311
CONSTR. CONTR. NO.: N40085-17-C-5002
NAVFAC DRAWING NO.: 12734899
SHEET 116 OF 188
A-501 DD1-16-980

DRAWFORM REVISION: 10 OCTOBER 2014

10/28/2016 6:46:54 AM X:\297 PORTSMOUTH NAVAL SHIPYARD\297.005.001 - DD#1 DEFUELING COMPLEX DESIGN\DRAWINGS\M140\SHEETS\A-501.DWG

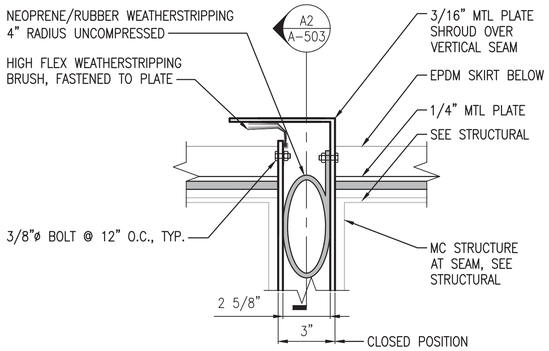

VERTICAL ROOF SEAM PLAN SECTION (C1)

SCALE: 3" = 1'-0" A-503

DETAIL NOTE C1:
INTENT OF THIS DETAIL IS TO SHOW THE CONTINUOUS ROOF AIR AND WATER SEAL TO MAINTAIN NEGATIVE DP REQUIREMENTS OF THE ENCLOSURE. THE SEAL AND BRUSH AS SHOWN SHALL BE CONTINUOUS ACROSS THE FACE AND SIDES OF THE ROOF SECTION AND COMPRESSED WHEN THE ROOF IS IN IT'S CLOSED POSITION.

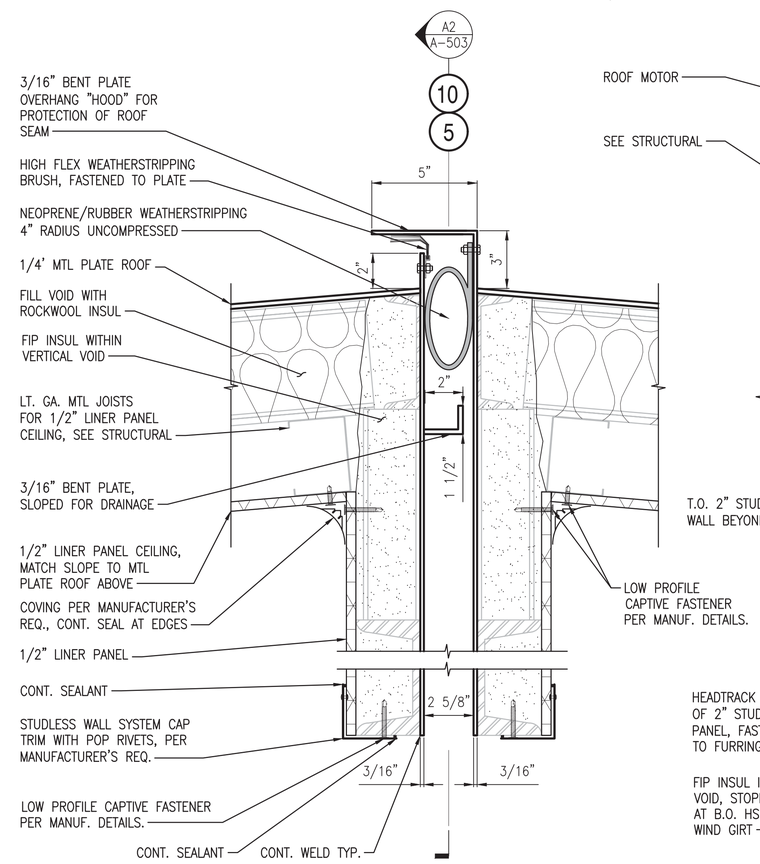

NOTE: SEE STRUCTURAL FOR TYPICAL ROOF BUMPER DETAIL

MOVABLE ROOF SEAM SECTION (A1)

SCALE: 3" = 1'-0" A-106, A-301, A-301A

GENERAL NOTE FOR A-502
INTENT OF MOVABLE ROOF DETAILS ARE TO SHOW CONTINUOUS GASKETING THAT IS TO BE INSTALLED ALONG THE SIDES OF THE ROOF AS A BARRIER FOR WATER AND AIR INFILTRATION AND FOR MAINTAINING THE NEGATIVE DP WITHIN THE ENCLOSURE. THE GASKET SHALL BE INSTALLED TO PROVIDE CONTINUOUS CONTACT, WHILE CLOSED AND WHILE MOVING, TO THE BOLTED PLATE OR HSS MEMBER BELOW INCLUDING WHERE THE TWO ROOF SECTIONS MEET AND WHERE THE SIDE ROOF SECTION MEETS THE END ROOF SECTIONS. ADJUSTABILITY IS PROVIDED IN BOTH THE BOLTED CONNECTION AS WELL AS THE ROOF MOTOR RAIL AND WHEEL BLOCK ASSEMBLY. THE CONTRACTOR SHALL VERIFY THE MOTOR SIZING WITH THE MANUFACTURER BASED ON THE ANTICIPATED WEIGHT OF THE ROOF ASSEMBLY. ALL WHEEL BLOCKS AND MOTORS SHALL BE COORDINATED WITH THE STRUCTURAL AND ARCHITECTURAL SUBCONTRACTORS TO ENSURE A COORDINATED SYSTEM. ROOF SECTIONS BUMPING AND SEPARATING AT THE CLOSE CONDITION WILL NOT BE ACCEPTABLE. THE ENTIRE SYSTEM SHALL BE COORDINATED TO ENSURE A CONTINUOUS WATER AND AIR BARRIER IS MAINTAINED AT TIMES. SEE MECHANICAL AND STRUCTURAL DRAWINGS AND SPECIFICATIONS FOR FURTHER INFORMATION.

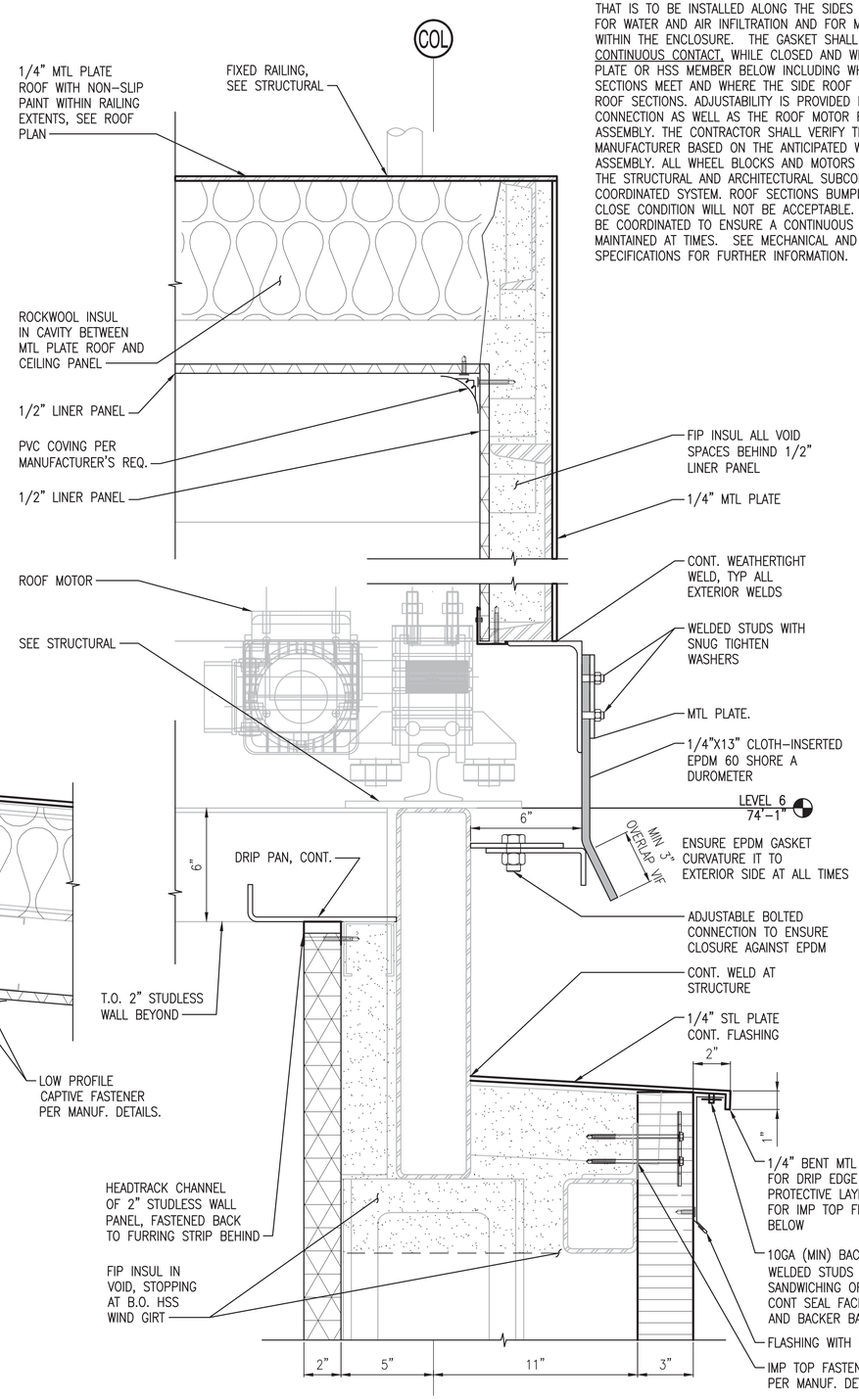

MOVABLE ROOF EDGE DETAIL (A3)

SCALE: 3"=1'-0" A-105, A-106, A-303

NOTES

1. SEE DRAWING A-001 FOR GENERAL NOTES, ABBREVIATIONS AND LEGEND.
2. ENSURE THAT EPDM SKIRT IS CREATING SEAL AGAINST APPLICABLE METAL PROTRUSION ALONG MOVABLE ROOF PERIMETER. NO DAYLIGHT SHALL BE SEEN AT ANY LOCATION ALONG PERIMETER OF ROOF IN CLOSED POSITION.

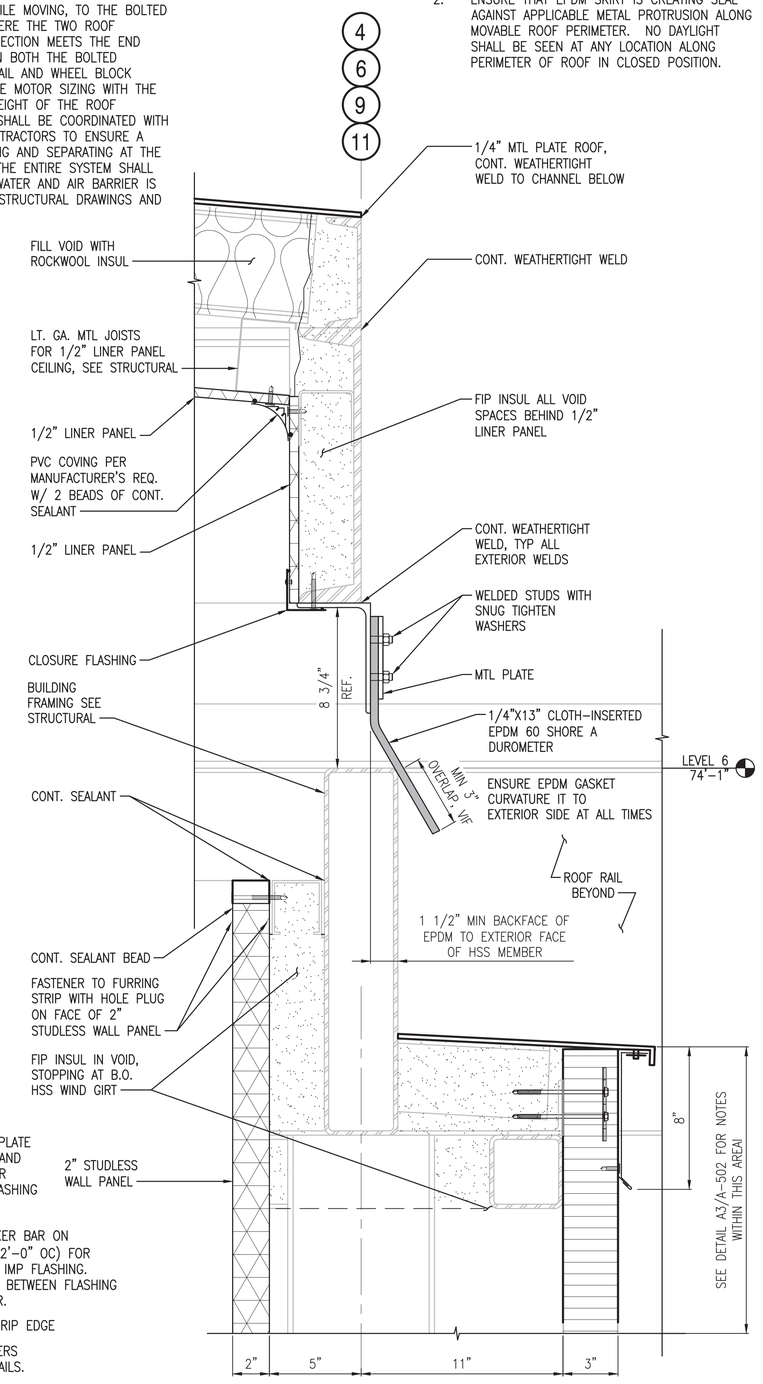

MOVABLE ROOF EDGE DETAIL (A4)

SCALE: 3"=1'-0" A-105, A-106, A-301, A-301A, A-303, A-304

0 3" 6" 9"
Scale: 3" = 1'-0"

SYM	DESCRIPTION	DATE	APPR
0	ISSUED FOR CONSTRUCTION	10/28/2016	CBC

NAVFAC

REGISTERED ARCHITECT
DONALD M. DYER
No. 859
STATE OF MAINE
10/28/16

Colby Company engineering

APPROVED
David W. Thumfeld
FOR COMMANDER NAVFAC
ACTIVITY
TIM FISHER
C. 2370.6 BRANCH HEAD
SATISFACTORY TO DATE 10/28/2016
DES GJN DRW GJN CHK DMD
PM/DM PETER STOCKLESS
BRANCH MANAGER IAN BODWELL
FEA/PM&E AMIN BAHROUR
FIRE PROTECTION PATRICK BAKAJ

DEPARTMENT OF THE NAVY
NAVAL FACILITIES ENGINEERING COMMAND
PUBLIC WORKS DEPARTMENT - MAINE
NAVAL FACILITIES ENGINEERING COMMAND ~ MID-ATLANTIC
NAVAL SHIPYARD - PORTSMOUTH, NH
PORTSMOUTH NAVAL SHIPYARD
KITTERY, ME
DRY DOCK #1 DEFUELING COMPLEX
M-140 COMPLEX
ARCHITECTURAL DETAILS

EPROJECT NO.: 1363311
CONSTR. CONTR. NO.: N40085-17-C-5002
NAVFAC DRAWING NO. 12734900
SHEET 117 OF 188
A-502 DD1-16-981

DRAWFORM REVISION: 10 OCTOBER 2014

10/28/2016 6:47:02 AM X:\297 PORTSMOUTH NAVAL SHIPYARD\297.005.001 - DD#1 DEFUELING COMPLEX DESIGN\DRAWINGS\M140\SHEETS\A-502.DWG

DETAIL NOTE A2:
INTENT OF THIS DETAIL IS TO SHOW THE DRAINAGE TUBE CONNECTED TO THE GUTTER TO ALLOW WATER TO DRAIN FROM ANY WIND DRIVEN RAIN OR OTHER EVENT. THE INTENT OF THE GUTTER IS TO PROVIDE PROTECTION FROM A MAJOR WEATHER EVENT IN THE CASE THE GASKET SEAL AND BRUSH FAIL OR WEAR.

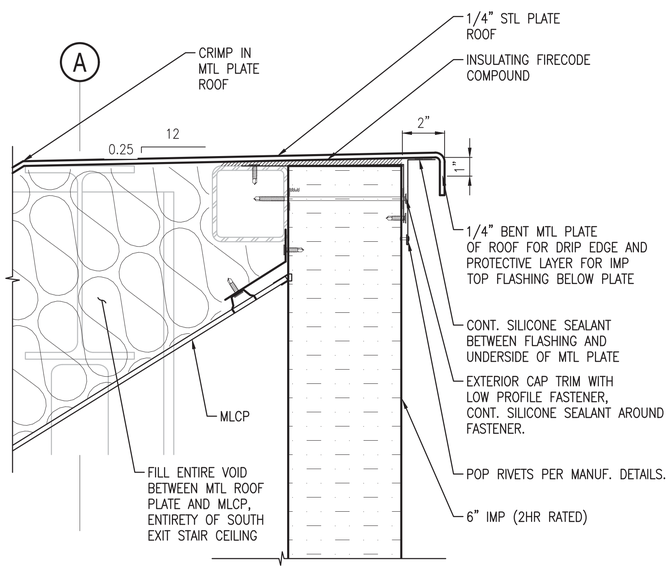

EXIT STAIR - SOUTH ROOF EDGE

SCALE: 3"=1'-0" A-302A **B1**

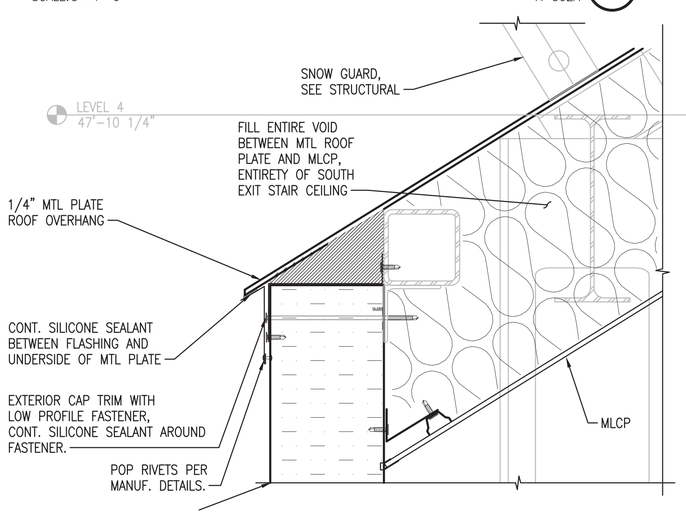

EXIT STAIR - SOUTH ROOF EDGE

SCALE: 3"=1'-0" A-302A **A1**

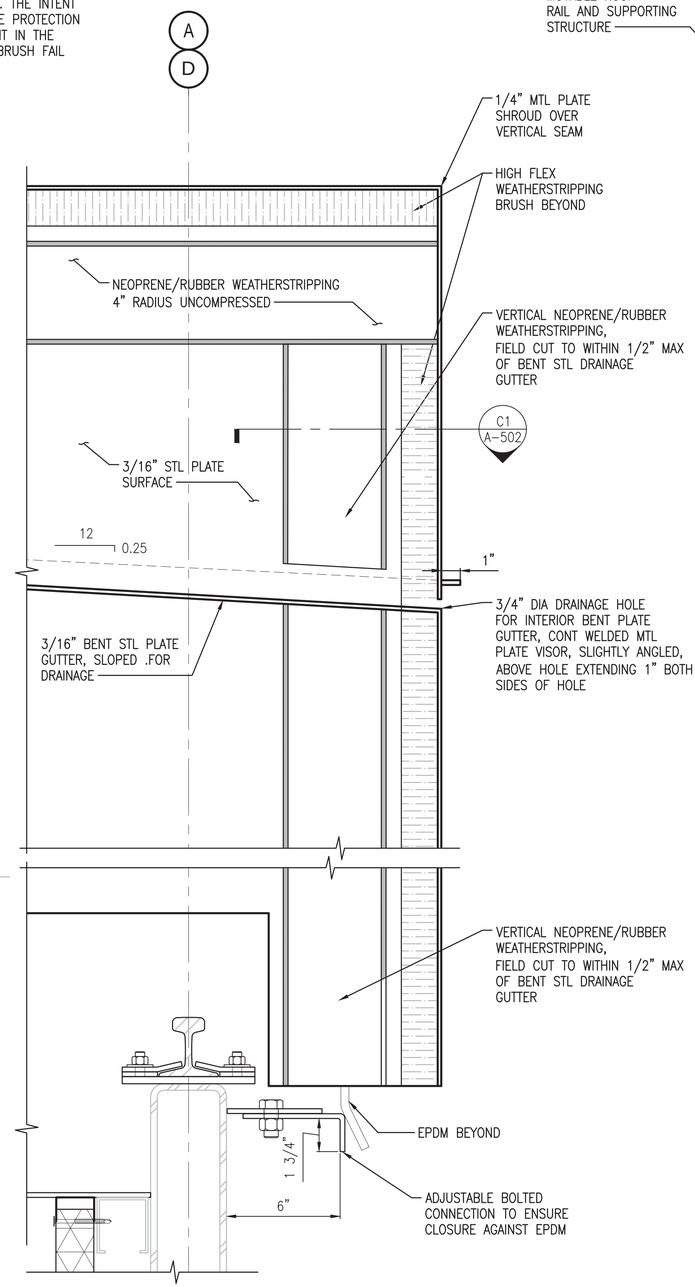

MOVABLE ROOF SEAM SECTION

SCALE: 3"=1'-0" A-502 **A2**

NOTE:
SIMILAR AT OPPOSITE OF ROOF

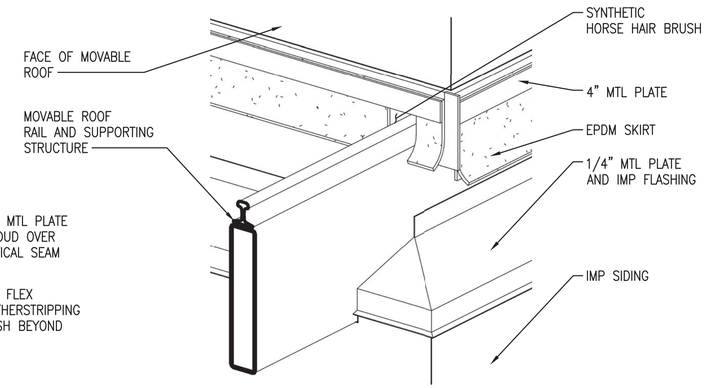

MOVABLE ROOF EDGE DIAGRAMMATIC ISO

SCALE: NTS **D4**

NOTES

1. SEE DRAWING A-001 FOR GENERAL NOTES, ABBREVIATIONS AND LEGEND.
2. ENSURE THAT EPDM SKIRT IS CREATING SEAL AGAINST APPLICABLE METAL PROTRUSION ALONG MOVABLE ROOF PERIMETER. NO DAYLIGHT SHALL BE SEEN AT ANY LOCATION ALONG PERIMETER OF ROOF IN CLOSED POSITION.

DETAIL NOTE A4:
INTENT OF THIS DETAIL IS TO SHOW THE AIR AND WATER BARRIER SEAL AROUND THE ROOF RAIL. WEATHERSTRIPPING SHALL BE CUT TO FIT AROUND THE RAIL AND PROVIDE A COMPLETE BARRIER WITH NO GAP LARGER THAN 1/16" AROUND ANY PORTION OF THE RAIL OR THE ADJACENT EPDM SKIRT.

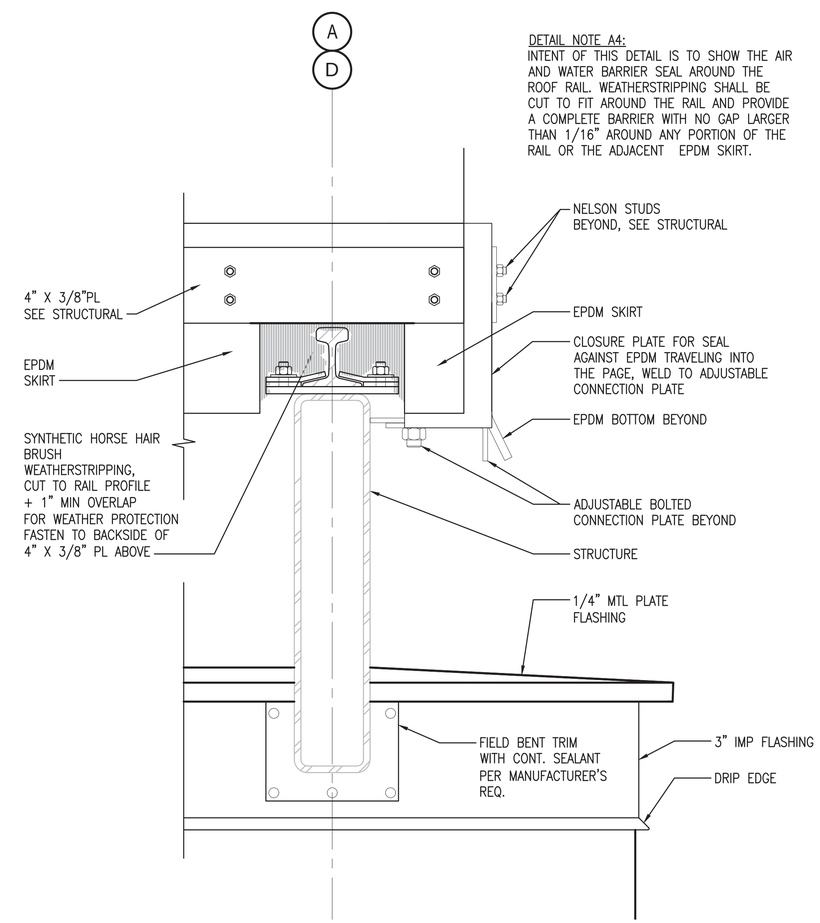

MOVABLE ROOF RAIL ELEVATION

SCALE: 3"=1'-0" A-106, A-302 **A4**

0 3" 6" 9"
Scale: 3" = 1'-0"

SYM	DESCRIPTION	DATE	APPR
0	ISSUED FOR CONSTRUCTION	10/28/2016	CBC

NAVFAC

REGISTERED ARCHITECT DONALD M. DYER No. 859 STATE OF MAINE 10/28/16

Colby Company engineering

APPROVED
David W. Thurnfield
FOR COMMANDER NAVFAC

ACTIVITY
TIM FISHER
C. 2370.6 BRANCH HEAD

SATISFACTORY TO DATE 10/28/2016
DES GJN DRW GJN CHK DMD
PMDM PETER STOCKLESS
BRANCH MANAGER IAN BODWELL
FEA/DPM&E AMIN BAHROUR
FIRE PROTECTION PATRICK BAKAJ

DEPARTMENT OF THE NAVY
NAVAL FACILITIES ENGINEERING COMMAND
PUBLIC WORKS DEPARTMENT - MAINE
NAVAL FACILITIES ENGINEERING COMMAND ~ MID-ATLANTIC
NAVAL SHIPYARD - PORTSMOUTH, NH
PORTSMOUTH NAVAL SHIPYARD
KITTERY, ME
DRY DOCK #1 DEFUELING COMPLEX
M-140 COMPLEX
ROOF DETAILS

EPROJECT NO.: 1363311
CONSTR. CONTR. NO. N40085-17-C-5002
NAVFAC DRAWING NO. 12734901
SHEET 118 OF 188
A-503 DD1-16-982

DRAWFORM REVISION: 10 OCTOBER 2014

10/28/2016 6:47:23 AM X:\297 PORTSMOUTH NAVAL SHIPYARD\297.005.001 - DD#1 DEFUELING COMPLEX DESIGN\DRAWINGS\M140\SHEETS\A-503.DWG

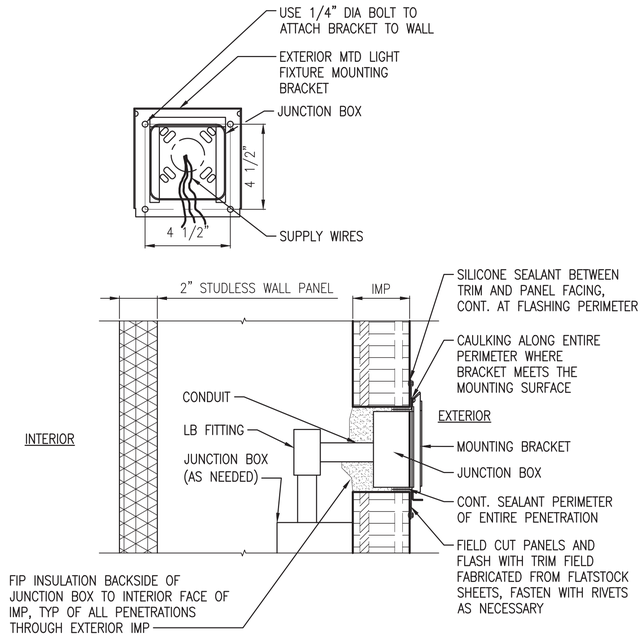

DETAIL NOTES:

1. FASTENERS SHALL BE OF SUFFICIENT SIZE, STRENGTH AND LENGTH IN ACCORDANCE INSULATED METAL PANELS REQUIREMENTS.
2. BED FASTENER IN SEALANT TO PROVIDE WEATHER–TIGHT JOINT. SEE SPECIFICATION SECTIONS 07 42 63 AND 07 92 00 FOR MORE INFORMATION
3. CUT PANEL FACINGS WITH DREMEL ROUTER OR SIM, CUT IMP CORE WITH SERRATED BREAD KNIFE. SPECIAL CARE SHOULD BE TAKEN TO PREVENT PANEL DELAMINATION.
4. DO NOT PENETRATE PANEL JOINERY, LOCATE PENETRATIONS ACCORDINGLY..

EXTERIOR MTD LIGHT BRACKET DETAIL (C1)

SCALE: 3"=1'–0"

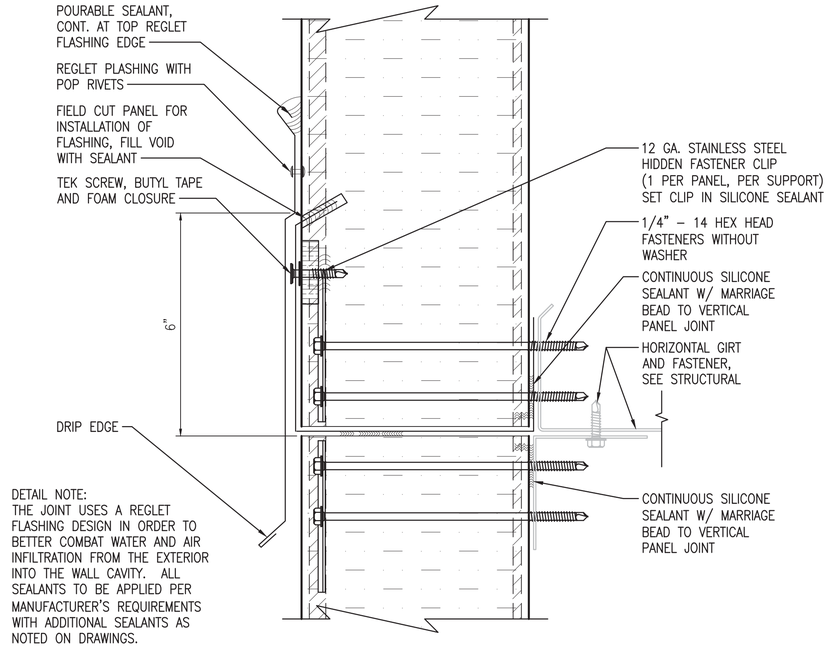

DETAIL NOTE:
THE JOINT USES A REGLET FLASHING DESIGN IN ORDER TO BETTER COMBAT WATER AND AIR INFILTRATION FROM THE EXTERIOR INTO THE WALL CAVITY. ALL SEALANTS TO BE APPLIED PER MANUFACTURER'S REQUIREMENTS WITH ADDITIONAL SEALANTS AS NOTED ON DRAWINGS.

6" (2HR FIRE RATED) IMP STACK JOINT, TYP (C2)

SCALE: 6"=1'–0" A–201, A–202, A–202A, A–203

NOTES

1. SEE DRAWING A–001 FOR GENERAL NOTES, ABBREVIATIONS AND LEGEND.
2. UNLESS STATED OTHERWISE, FASTENER AND POP RIVET SPACING PER MANUFACTURER'S STANDARD REQUIREMENTS.

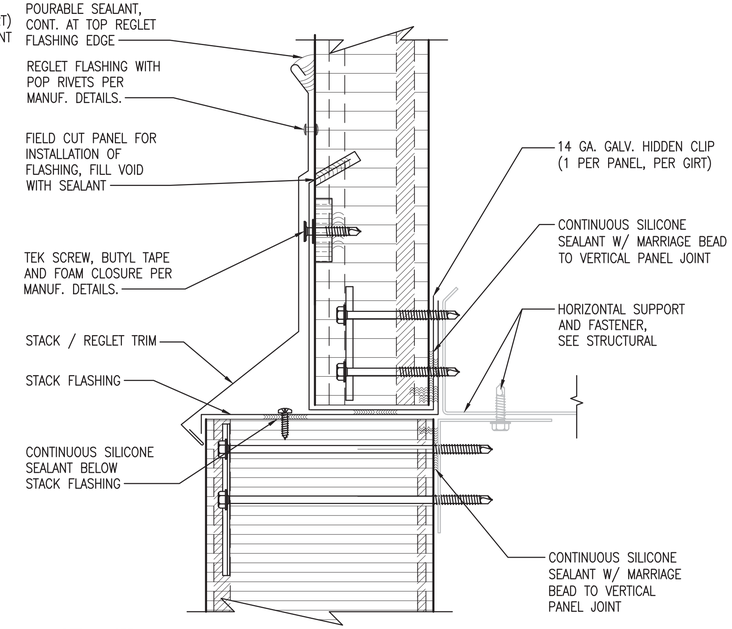

DETAIL NOTE:
THE STACK DETAIL USES REGLET FLASHING DESIGN IN ORDER TO BETTER COMBAT WATER AND AIR INFILTRATION FROM THE EXTERIOR INTO THE WALL CAVITY AT THIS IMP TRANSITION LOCATION. ALL SEALANTS TO BE APPLIED PER MANUFACTURER'S REQUIREMENTS WITH ADDITIONAL SEALANTS AS NOTED ON DRAWINGS.

3" IMP INTO 6" (2HR FR) IMP TRANSITION, TYP (B5)

SCALE: 6"=1'–0" A–201, A–201A

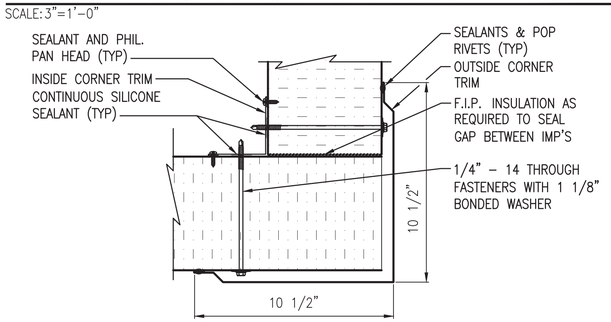

6" (2 HR FIRE RATED) IMP CORNER, TYP (B1)

SCALE: 3"=1'–0" A–100, A–100A, A–101, A–101A, A–102, A–103, A–104

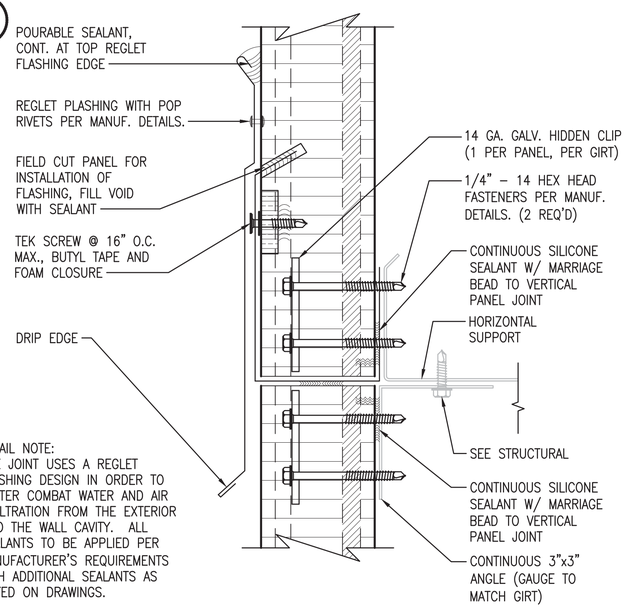

DETAIL NOTE:
THE JOINT USES A REGLET FLASHING DESIGN IN ORDER TO BETTER COMBAT WATER AND AIR INFILTRATION FROM THE EXTERIOR INTO THE WALL CAVITY. ALL SEALANTS TO BE APPLIED PER MANUFACTURER'S REQUIREMENTS WITH ADDITIONAL SEALANTS AS NOTED ON DRAWINGS.

3" IMP STACK JOINT, TYP (A2)

SCALE: 6"=1'–0" A–201, A–201A, A–202, A–202A, A–203

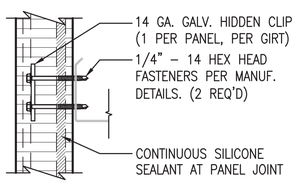

3" IMP INTERMEDIATE SUPPORT, TYP (A4)

SCALE: 6"=1'–0"

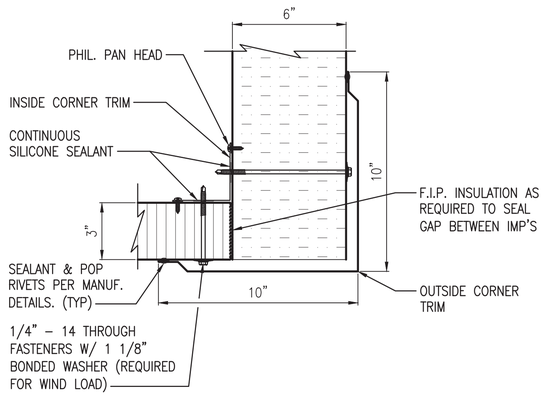

3" IMP INTO 6" (2HR FR) IMP CORNER, TYP (A5)

SCALE: 6"=1'–0" A–100, A–100A

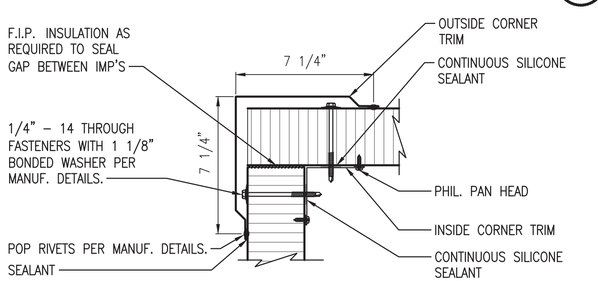

3" IMP OUTSIDE CORNER, TYP (A1)

SCALE: 3"=1'–0" A–100, A–100A

0 3" 6" 9" Scale: 3" = 1'–0"

0 6" 12" 18" Scale: 6" = 1'–0"

SYM	DESCRIPTION	DATE	APPR
0	ISSUED FOR CONSTRUCTION	10/28/2016	CBC

NAVFAC

REGISTERED ARCHITECT DONALD M. DYER No. 859 STATE OF MAINE 10/28/16

Colby Company engineering

A/E INFO

APPROVED David W. Trumfield FOR COMMANDER NAVFAC

ACTIVITY: TIM FISHER, C. 2370.6 BRANCH HEAD

SATISFACTORY TO DATE 10/28/2016

DES GJN | DRW GJN | CHK DMD

PMDM: PETER STOCKLESS

BRANCH MANAGER: IAN BODWELL

FEA/PM&E: AMIN BAHROUR

FIRE PROTECTION: PATRICK BAKAJ

DEPARTMENT OF THE NAVY
NAVAL FACILITIES ENGINEERING COMMAND
PUBLIC WORKS DEPARTMENT - MAINE

NAVAL FACILITIES ENGINEERING COMMAND ~ MID-ATLANTIC
NAVAL SHIPYARD - PORTSMOUTH, NH

PORTSMOUTH NAVAL SHIPYARD
KITTERY, ME

DRY DOCK #1 DEFUELING COMPLEX
M-140 COMPLEX

ARCHITECTURAL DETAILS

EPROJECT NO.: 1363311

CONSTR. CONTR. NO. N40085-17-C-5002

NAVFAC DRAWING NO. 12734902

SHEET 119 OF 188

A-504 | DD1-16-983

DRAWFORM REVISION: 10 OCTOBER 2014

10/28/2016 6:47:31 AM X:\297 PORTSMOUTH NAVAL SHIPYARD\297.005.001 - DD#1 DEFUELING COMPLEX DESIGN\DRAWINGS\M140\SHEETS\A-504.DWG

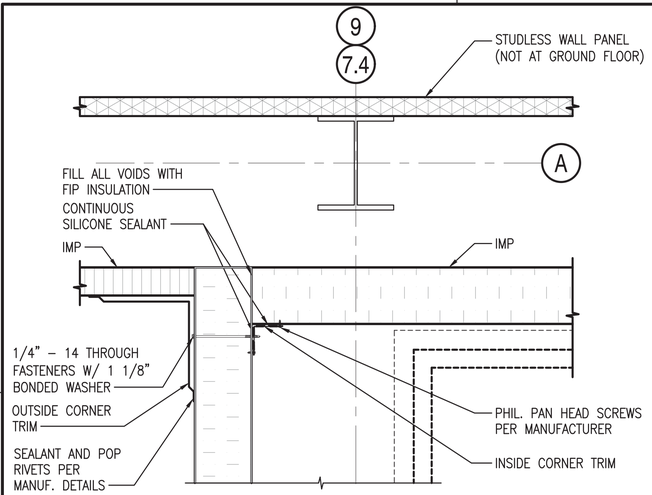

SECTION AT WALL INTERSECTION

SCALE: 1 1/2"=1'-0" A-100, A-100A, A-101, A-101A, A-102, A-103 (D1)

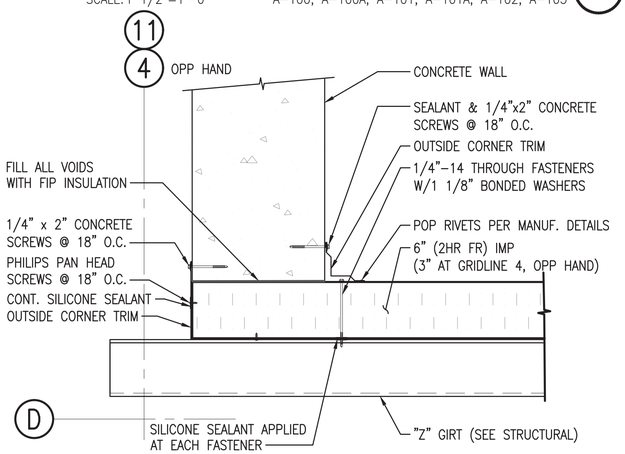

NOTE: TYPICAL @ DEMIN AREAS

DETAIL AT CONC. WALL & IMP SIDING

SCALE: 1 1/2"=1'-0" A-100, A-100A (B1)

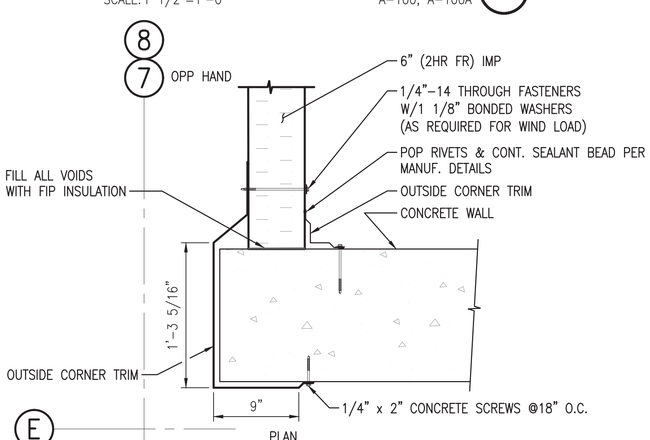

DETAIL AT CONC. WALL & IMP SIDING

SCALE: 1 1/2"=1'-0" A-100A (A1)

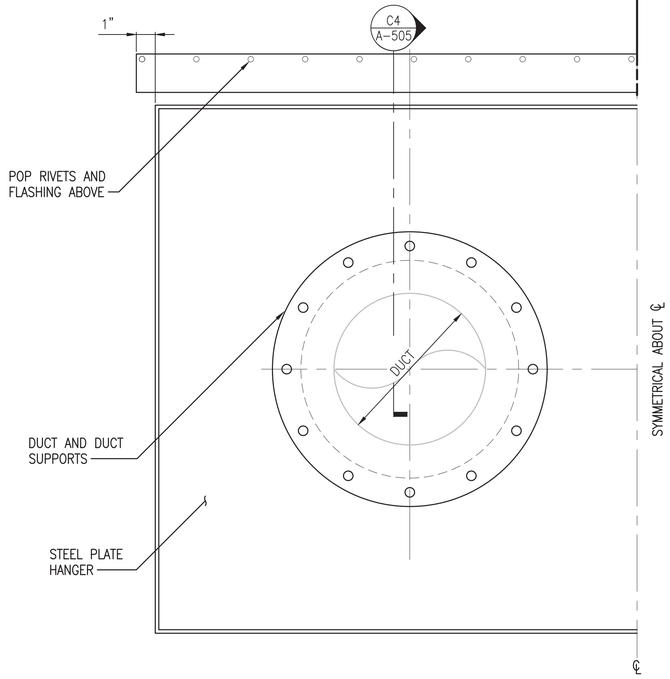

TYP ENGINEERED DUCT PENETRATION ELEVATION

SCALE: 3"=1'-0" (C3)

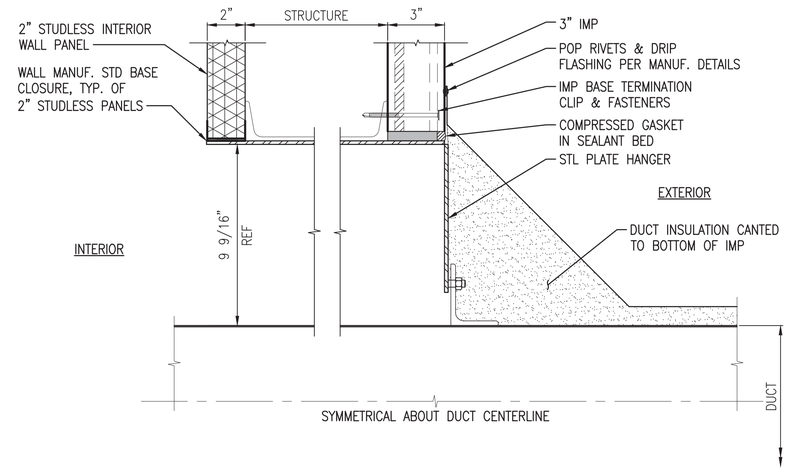

TYP ENGINEERED DUCT PENETRATION SECTION

SCALE: 3"=1'-0" A-505 (C4)

DETAIL NOTE: COORDINATE WITH STRUCTURAL AND MECHANICAL DETAILS

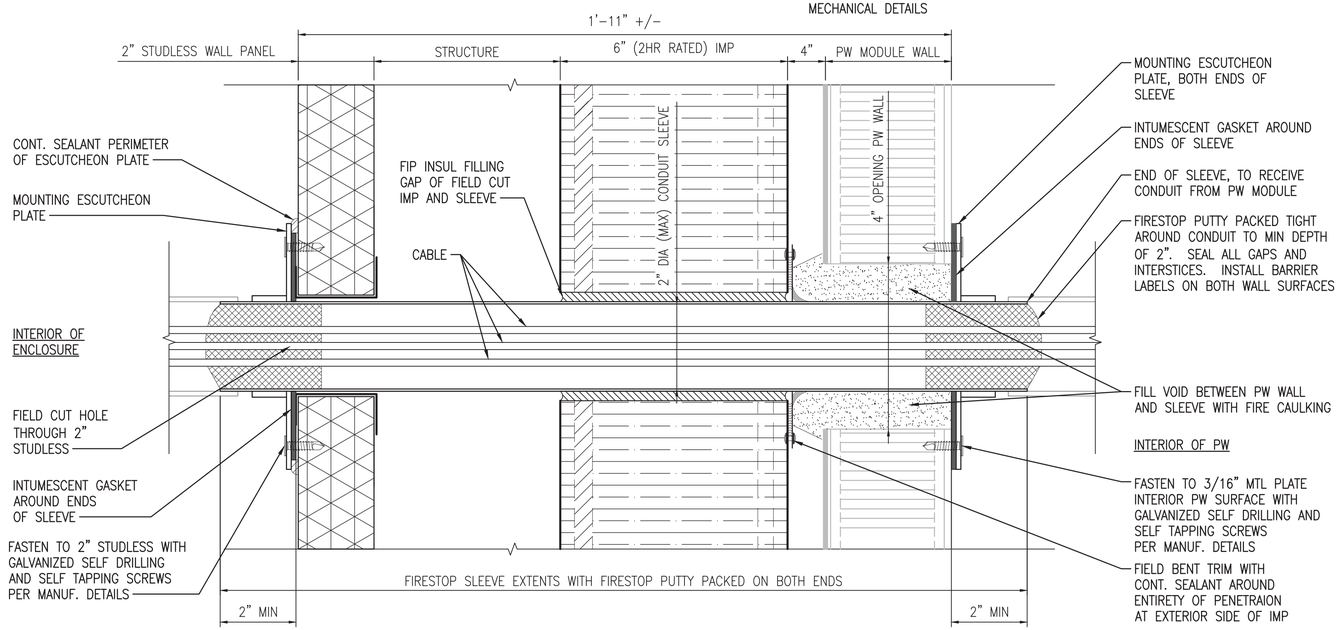

DETAIL NOTE: FIRESTOP SLEEVE TO BE INSTALLED FIRST WITHIN ENCLOSURE WALL ASSEMBLY AND HAVE ENOUGH LENGTH ON EXTERIOR SIDE TO PENETRATE THROUGH PASSAGEWAY MODULE WALL OPENING WHEN BOTH ENCLOSURES AND PASSAGEWAY MODULES ARE IN FINAL RESPECTIVE LOCATIONS ON THE SITE. PASSAGEWAY WALL OPENING MAY BE FIELD LOCATED IF NECESSARY IN ORDER TO PROVIDE BEST COORDINATION WITH LOCATION OF FIRESTOP SLEEVE FROM ENCLOSURE SIDE.

TYP CONDUIT SLEEVE PENETRATION SECTION

SCALE: 6"=1'-0" A-101, A-101A, A-605 (A3)

NOTES

1. SEE DRAWING A-001 FOR GENERAL NOTES, ABBREVIATIONS AND LEGEND.

SYM	DESCRIPTION	DATE	APPR
0	ISSUED FOR CONSTRUCTION	10/28/2016	CBC

NAVFAC

REGISTERED ARCHITECT DONALD M. DYER No. 859 STATE OF MAINE 10/28/16

Colby Company engineering

A/E INFO

APPROVED David W. Trumfield FOR COMMANDER NAVFAC

ACTIVITY: TIM FISHER, C. 2370.6 BRANCH HEAD

SATISFACTORY TO DATE 10/28/2016

DES GJN DRW GJN CHK DMD

PM/CM PETER STOCKLESS

BRANCH MANAGER IAN BODWELL

FEAD/PM&E AMIN BAHROUR

FIRE PROTECTION PATRICK BAKAJ

DEPARTMENT OF THE NAVY
NAVAL FACILITIES ENGINEERING COMMAND
PUBLIC WORKS DEPARTMENT - MAINE

NAVAL FACILITIES ENGINEERING COMMAND ~ MID-ATLANTIC
NAVAL SHIPYARD - PORTSMOUTH, NH

PORTSMOUTH NAVAL SHIPYARD
KITTERY, ME

DRY DOCK #1 DEFUELING COMPLEX
M-140 COMPLEX

ARCHITECTURAL DETAILS

EPROJECT NO.: 1363311

CONSTR. CONTR. NO. N40085-17-C-5002

NAVFAC DRAWING NO. 12734903

SHEET 120 OF 188

A-505 | DD1-16-984

Scale: 3" = 1'-0" (0, 3", 6", 9")

Scale: 6" = 1'-0" (0, 6", 12", 18")

Scale: 1 1/2" = 1'-0" (0, 1/2", 1', 1 1/2')

DRAWFORM REVISION: 10 OCTOBER 2014

10/28/2016 6:47:38 AM X:\297 PORTSMOUTH NAVAL SHIPYARD\297.005.001 - DD#1 DEFUELING COMPLEX DESIGN\DRAWINGS\M140\SHEETS\A-505.DWG

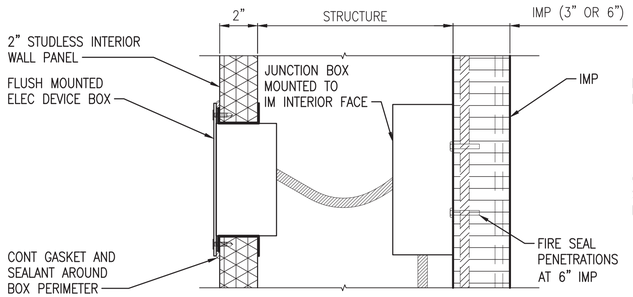

TYP FLUSH MOUNT ELEC SECTION (D1)

SCALE: 3"=1'-0"

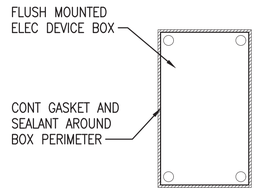

TYP FLUSH MOUNT ELEC ELEVATION (D2)

SCALE: 3"=1'-0"

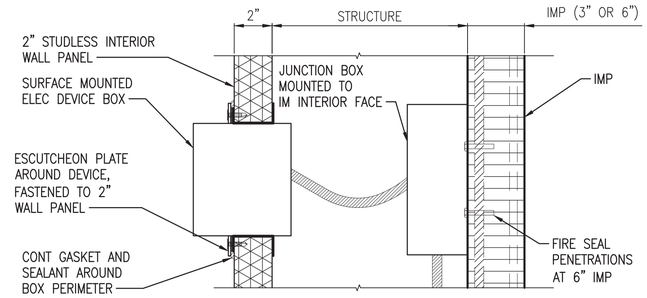

TYP SURFACE MOUNT ELEC SECTION (D3)

SCALE: 3"=1'-0"

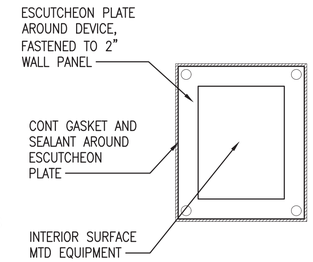

TYP SURFACE MOUNT ELEC ELEVATION (D4)

SCALE: 3"=1'-0"

NOTES

1. SPECIAL ATTENTION TO BE GIVEN TO AIR AND WATER INFILTRATION PROTECTION AROUND ALL EXTERIOR PENETRATIONS, JOINTS, SEAMS AND EDGES.
2. ENCLOSURE IS DESIGNED TO BE AIRTIGHT IN ORDER TO SUPPORT NEGATIVE INTERIOR VENTILATION OF −0.15" +/− 0.05" WC. ALL INTERIOR PENETRATIONS TO BE SEALED APPROPRIATELY IN ORDER TO MEET NEGATIVE AIR PRESSURE REQUIREMENTS.
3. ALL PENETRATIONS THROUGH 6" IMP TO BE FIRE RATED. IF THROUGH 3" IMP PENETRATION IS UNRATED.

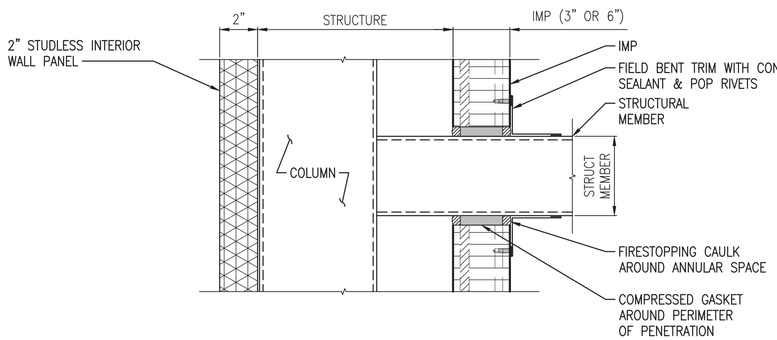

TYP STRUCTURAL PENETRATION SECTION (C1)

SCALE: 3"=1'-0" S-521, S-522

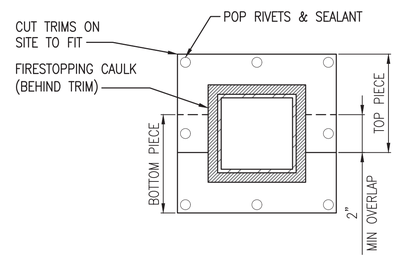

TYP STRUCTURAL PENETRATION ELEVATION (C3)

SCALE: 3"=1'-0" S-521, S-522

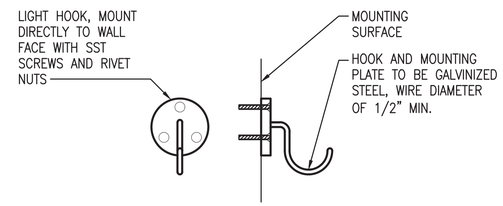

HOOK FOR HUNG LIGHTS AND CABLES (C4)

SCALE: 3"=1'-0"

DETAIL NOTES:

1. 2" DIA HOOK FOR LIGHT FIXTURE SUPPORT
2. 4" DIA FOR CABLING WITHIN PASSAGEWAYS
3. SEE ELECTRICAL FOR SPACING OF HOOKS

MOUNTING GUIDANCE		
WEIGHT (LBS)	DEPTH	FASTENER TYPE
0–25	0 TO 6"	THIN PROFILE SHEET METAL TEK SCREWS
0–25	> 6"	HEAVY DUTY RIVET NUT TWIST RESISTANT
25–50	ALL CASES	HEAVY DUTY RIVET NUT TWIST RESISTANT

MOUNTING GUIDANCE NOTES:

1. MOUNTING GUIDANCE ASSUMES THAT ALL EQUIPMENT IS MOUNTED ON STUDLESS, HONEYCOMB PORTION OF WALL. WHENEVER POSSIBLE, EQUIPMENT SHOULD BE MOUNTED TO THE INTERIOR METAL PANEL'S INTERNAL RACEWAYS FOR ADDITIONAL STRUCTURAL SUPPORT.

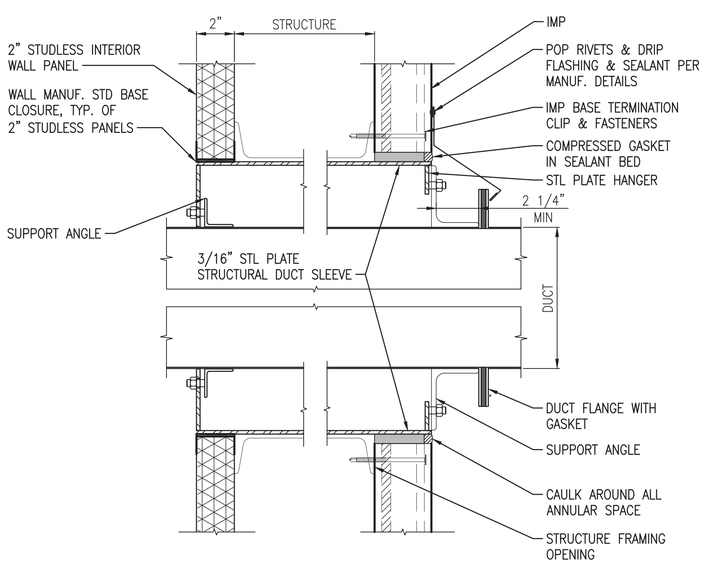

TYP NON-ENGINEERED DUCT PENETRATION SECTION (A1)

SCALE: 3"=1'-0" A-101, A-101A

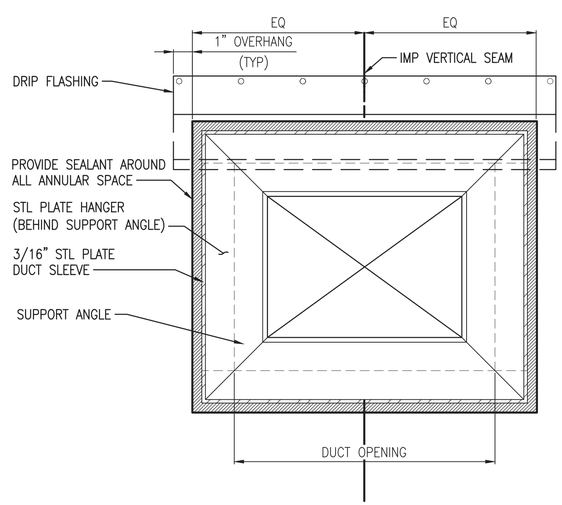

TYP NON-ENGINEERED DUCT PENETRATION ELEVATION (A3)

SCALE: 3"=1'-0"

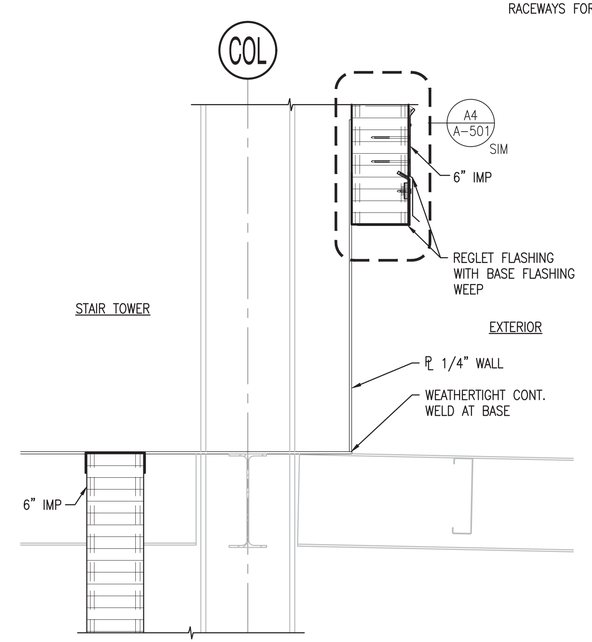

SECTION AT BASE OF NORTH WALL @ STAIR TOWER (A4)

SCALE: 1 1/2"=1'-0" A-104

0 1/2' 1' 1 1/2'
Scale: 1 1/2" = 1'-0"

0 3" 6" 9"
Scale: 3" = 1'-0"

SYM	DESCRIPTION	DATE	APPR
0	ISSUED FOR CONSTRUCTION	10/28/2016	CBC

NAVFAC

REGISTERED ARCHITECT DONALD M. DYER No. 859 STATE OF MAINE 10/28/16

Colby Company engineering

A/E INFO

APPROVED: David W. Thurnfield
FOR COMMANDER NAVFAC

ACTIVITY: TIM FISHER C. 2370.6 BRANCH HEAD

SATISFACTORY TO DATE 10/28/2016

DES GJN DRW GJN CHK DMD

PM/DM PETER STOCKLESS

BRANCH MANAGER IAN BODWELL

FEA/PM&E AMIN BAHROUR

FIRE PROTECTION PATRICK BAKAJ

DEPARTMENT OF THE NAVY
NAVAL FACILITIES ENGINEERING COMMAND
PUBLIC WORKS DEPARTMENT - MAINE

NAVAL FACILITIES ENGINEERING COMMAND ~ MID-ATLANTIC
NAVAL SHIPYARD - PORTSMOUTH, NH

PORTSMOUTH NAVAL SHIPYARD
DRY DOCK #1 DEFUELING COMPLEX
KITTERY, ME

M-140 COMPLEX

PENETRATION DETAILS

EPROJECT NO.: 1363311

CONSTR. CONTR. NO. N40085-17-C-5002

NAVFAC DRAWING NO. 12734904

SHEET 121 OF 188

A-506 DD1-16-985

DRAWFORM REVISION: 10 OCTOBER 2014

10/28/2016 6:47:45 AM X:\297 PORTSMOUTH NAVAL SHIPYARD\297.005.001 - DD#1 DEFUELING COMPLEX DESIGN\DRAWINGS\M140\SHEETS\A-506.DWG

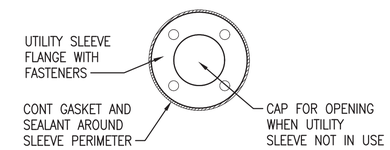

2" UTILITY SLEEVE ELEVATION (D1)

SCALE: 3"=1'-0" A-507

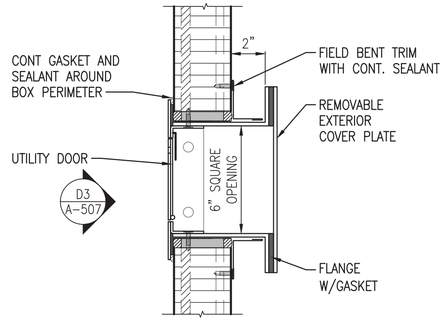

6" UTILITY SLEEVE - PLAN SECTION (D2)

SCALE: 3"=1'-0" A-100, A-100A, A-101, A-101A, A-102, A-103, A-104, A-105, A-106, A-201, A-201A, A-202, A-202A, A-203

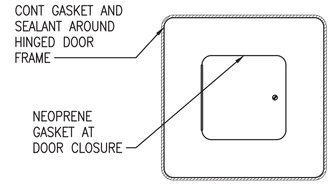

6" UTILITY SLEEVE INTERIOR ELEVATION (D3)

SCALE: 3"=1'-0" A-507

NOTES

1. SEE DRAWING A-001 FOR GENERAL NOTES, ABBREVIATIONS AND LEGEND.
2. UNLESS STATED OTHERWISE, FASTENER AND POP RIVET SPACING PER MANUFACTURER'S STANDARD REQUIREMENTS.

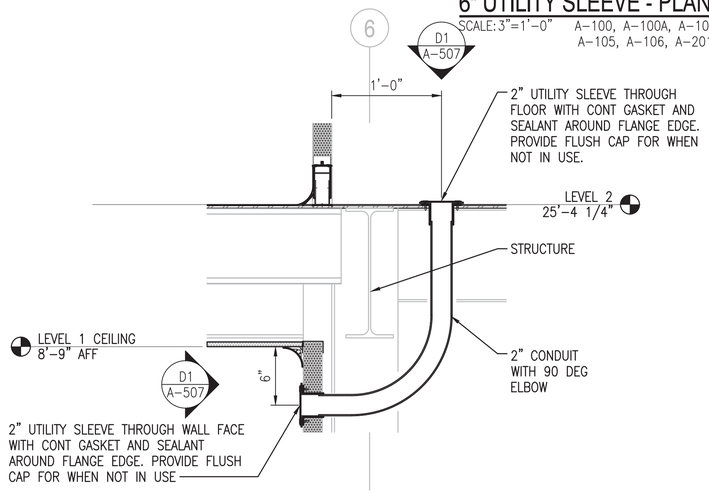

APD UTILITY CUTOUT - LEVEL 2 FLOOR TO LEVEL 1 WALLFACE (C1)

SCALE: 1'-1/2"=1'-0" A-100, A-100A, A-101, A-101A, A-102, A-103, A-104, A-105, A-106, A-201, A-201A, A-202, A-202A, A-203

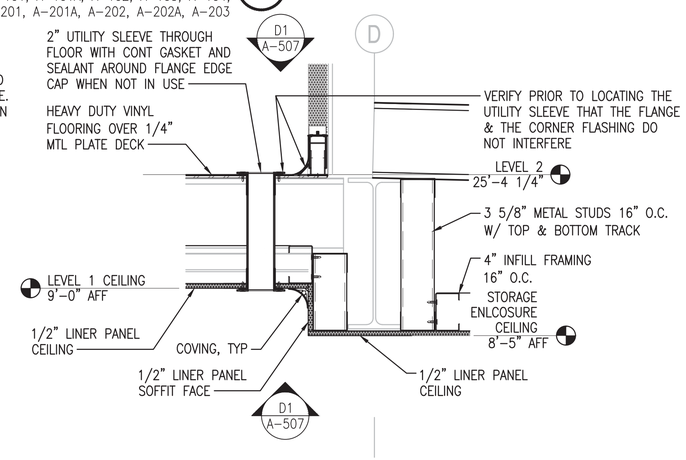

GAMMA UTILITY CUTOUT - LEVEL 2 FLOOR TO LEVEL 1 CEILING ABOVE STORAGE (C2)

SCALE: 1'-1/2"=1'-0" A-102, A-108

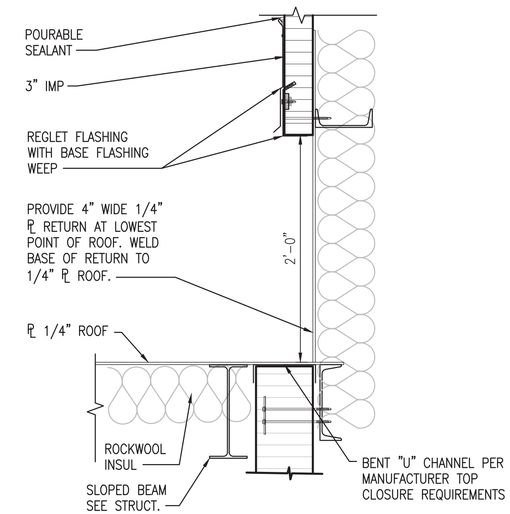

FLASHING DETAIL AT SLOPED ROOF (C4)

SCALE: 3"=1'-0" A-101, A-101A

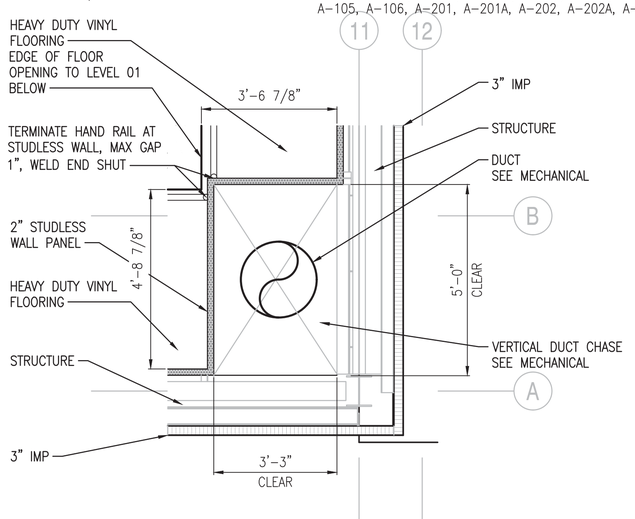

VERTICAL DUCT CHASE PLAN DETAIL (A1)

SCALE: 1/2"=1'-0" A-102, A-103

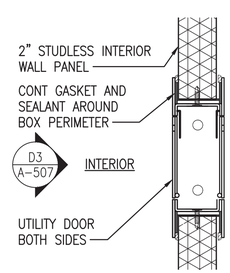

6" UTILITY SLEEVE THRU 2" STUDLESS - PLAN SECTION (A2)

SCALE: 3"=1'-0" A-100, A-100A, A-101, A-101A, A-102, A-103, A-104, A-105, A-106, A-201, A-201A, A-202, A-202A, A-203

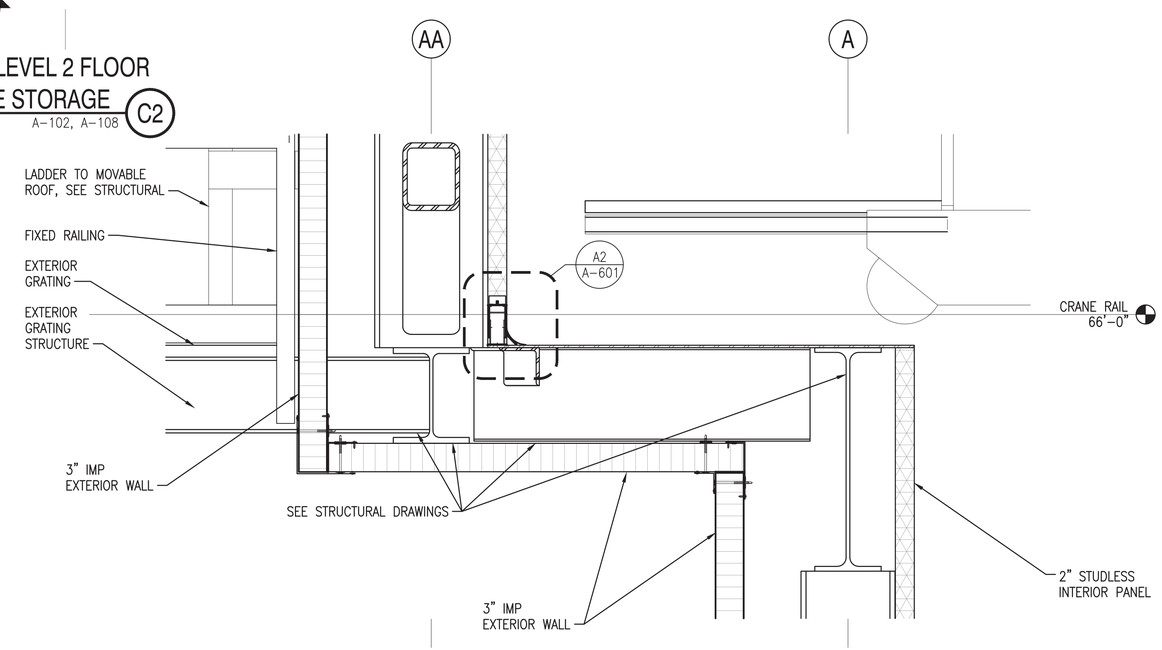

UNDERSIDE OF CRANE BUMPOUT DETAIL (A4)

SCALE: 1 1/2"=1'-0" A-303

0 1' 2' 4' Scale: 1/2" = 1'-0"
0 1/2' 1' 1 1/2' Scale: 1 1/2" = 1'-0"
0 3" 6" 9" Scale: 3" = 1'-0"

SYM	DESCRIPTION	DATE	APPR
0	ISSUED FOR CONSTRUCTION	10/28/2016	CBC

NAVFAC

REGISTERED ARCHITECT DONALD M. DYER No. 859 STATE OF MAINE 10/28/16

Colby Company engineering

A/E INFO

APPROVED David W. Thurnfield FOR COMMANDER NAVFAC

ACTIVITY TIM FISHER C. 2370.6 BRANCH HEAD

SATISFACTORY TO DATE 10/28/2016

DES GJN DRW GJN CHK DMD

PMDM PETER STOCKLESS

BRANCH MANAGER IAN BODWELL

FEAD/PM&E AMIN BAHROUR

FIRE PROTECTION PATRICK BAKAJ

DEPARTMENT OF THE NAVY
NAVAL FACILITIES ENGINEERING COMMAND
PUBLIC WORKS DEPARTMENT - MAINE

NAVAL FACILITIES ENGINEERING COMMAND – MID-ATLANTIC
NAVAL SHIPYARD - PORTSMOUTH, NH

PORTSMOUTH NAVAL SHIPYARD
KITTERY, ME

DRY DOCK #1 DEFUELING COMPLEX
M-140 COMPLEX

ARCHITECTURAL COORDINATION DETAILS

EPROJECT NO.: 1363311

CONSTR. CONTR. NO. N40085-17-C-5002

NAVFAC DRAWING NO. 12734905

SHEET 122 OF 188

A-507 DD1-16-986

DRAWFORM REVISION: 10 OCTOBER 2014

10/28/2016 6:47:51 AM X:\297 PORTSMOUTH NAVAL SHIPYARD\297.005.001 - DD#1 DEFUELING COMPLEX DESIGN\DRAWINGS\M140\SHEETS\A-507.DWG

FINISH SCHEDULE

LEVEL	LOCATION	FLOORS	CEILING	WALLS	NOTES
GROUND LEVEL	DEMIN W	BROOMED CONCRETE	MTL LINER PANEL	OTS	CHAINLINK FENCE PERIMETER TO GO TO UNDERSIDE OF STRUCTURE. GAPS MUST HAVE AT LEAST ONE DIM. <6" (E.G., L OR W).
GROUND LEVEL	DEMIN E	BROOMED CONCRETE	MTL LINER PANEL	OTS	CHAINLINK FENCE PERIMETER TO GO TO UNDERSIDE OF STRUCTURE. GAPS MUST HAVE AT LEAST ONE DIM. <6" (E.G., L OR W).
GROUND LEVEL	ENTRY VESTIBULE	BROOMED CONCRETE	OTS	OTS	GRATING
GROUND LEVEL	EXIT STAIR	DIAMOND PLATE	N/A	OTS (2HR WALL)	DIAMOND PLATE SURFACE.
GROUND LEVEL	M-140-3	BROOMED CONCRETE	OTS / OPEN	OTS	LEVELNESS REQUIREMENTS
GROUND LEVEL	M-140-4	BROOMED CONCRETE	OTS / OPEN	OTS	LEVELNESS REQUIREMENTS
GROUND LEVEL	RAILCAR ENCLOSURE (WEST)	BROOMED CONCRETE	MTL LINER PANEL	OTS	
GROUND LEVEL	RAILCAR ENCLOSURE (EAST)	BROOMED CONCRETE	MTL LINER PANEL	OTS	
GROUND LEVEL	STORAGE ENCLOSURE	BROOMED CONCRETE	OTS	OTS	ROOF HATCH ABOVE
LEVEL 1	DECK INSERT (WEST)	HEAVY DUTY VINYL	N/A	N/A	
LEVEL 1	DECK INSERT (EAST)	HEAVY DUTY VINYL	N/A	N/A	
LEVEL 1	EXIT STAIR	DIAMOND PLATE	N/A	OTS (2HR WALL)	DIAMOND PLATE SURFACE.
LEVEL 1	M-140-3	HEAVY DUTY VINYL	1/2" MTL LINER PANEL	2" STUDLESS	
LEVEL 1	M-140-4	HEAVY DUTY VINYL	1/2" MTL LINER PANEL	2" STUDLESS	
LEVEL 1	INTERIOR STAIR (WEST)	DIAMOND PLATE	N/A	2" STUDLESS	DIAMOND PLATE SURFACE TO BE GALVANIZED AND POWDER COATED.
LEVEL 1	INTERIOR STAIR (EAST)	DIAMOND PLATE	N/A	2" STUDLESS	DIAMOND PLATE SURFACE TO BE GALVANIZED AND POWDER COATED.
LEVEL 1	STAGING AREA	HEAVY DUTY VINYL	1/2" MTL LINER PANEL	2" STUDLESS	
LEVEL 1	STAGING AREA PASSAGEWAY	HEAVY DUTY VINYL	1/2" MTL LINER PANEL	2" STUDLESS	PROVIDES ACCESS FROM ACE-3 TO DRE-7 VIA LEVEL 1.
LEVEL 2	CENTRAL STAGING AREA	HEAVY DUTY VINYL	1/2" MTL LINER PANEL	2" STUDLESS	
LEVEL 2	EXIT STAIR	DIAMOND PLATE	N/A	OTS (2HR WALL)	DIAMOND PLATE SURFACE.
LEVEL 2	M-140-3	HEAVY DUTY VINYL	1/2" MTL LINER PANEL	2" STUDLESS	
LEVEL 2	M-140-4	HEAVY DUTY VINYL	1/2" MTL LINER PANEL	2" STUDLESS	
LEVEL 2	INTERIOR STAIR (WEST)	DIAMOND PLATE	N/A	2" STUDLESS	DIAMOND PLATE SURFACE TO BE GALVANIZED AND POWDER COATED.
LEVEL 2	INTERIOR STAIR (EAST)	DIAMOND PLATE	N/A	2" STUDLESS	DIAMOND PLATE SURFACE TO BE GALVANIZED AND POWDER COATED.
LEVEL 2	INTERIOR STAIR VESTIBULE (EAST)	HEAVY DUTY VINYL	1/2" MTL LINER PANEL	2" STUDLESS	
LEVEL 2	INTERIOR STAIR VESTIBULE (WEST)	HEAVY DUTY VINYL	1/2" MTL LINER PANEL	2" STUDLESS	
LEVEL 3	CENTRAL CORRIDOR	HEAVY DUTY VINYL	1/2" MTL LINER PANEL	2" STUDLESS	
LEVEL 3	EXIT STAIR	DIAMOND PLATE	N/A	OTS (2HR WALL)	DIAMOND PLATE SURFACE.
LEVEL 3	M-140-3	HEAVY DUTY VINYL	1/2" MTL LINER PANEL	2" STUDLESS	
LEVEL 3	M-140-4	HEAVY DUTY VINYL	1/2" MTL LINER PANEL	2" STUDLESS	
LEVEL 3	INTERIOR STAIR (WEST)	DIAMOND PLATE	N/A	2" STUDLESS	DIAMOND PLATE SURFACE TO BE GALVANIZED AND POWDER COATED.
LEVEL 3	INTERIOR STAIR (EAST)	DIAMOND PLATE	N/A	2" STUDLESS	DIAMOND PLATE SURFACE TO BE GALVANIZED AND POWDER COATED.
LEVEL 3	INTERIOR STAIR VESTIBULE (EAST)	HEAVY DUTY VINYL	1/2" MTL LINER PANEL	2" STUDLESS	
LEVEL 3	INTERIOR STAIR VESTIBULE (WEST)	HEAVY DUTY VINYL	1/2" MTL LINER PANEL	2" STUDLESS	
LEVEL 4	INT EXIT STAIR	DIAMOND PLATE	OTS	OTS (2HR WALL)	DIAMOND PLATE SURFACE.
EXTERIOR	CRANE BAY STAIRS	CARBON STEEL MTL GRATE	N/A	N/A	GALVANIZED

GENERAL NOTES

1. SEE DRAWING A-001 FOR GENERAL NOTES, ABBREVIATIONS AND LEGEND.
2. ENSURE AIRTIGHT AND CONTINUOUS SEAL AROUND ALL JOINTS, CORNERS AND EDGES OF INTERIOR FINISH SYSTEM. INTERIOR WORKING ENVIRONMENT TO BE UNDER NEGATIVE PRESSURE AND AIR TIGHTNESS OF INTERIOR FINISH FACES IS ESSENTIAL FOR OPERATIONS. SEE SPECIFICATION SECTION 097300 FOR DETAILED REQUIREMENTS.

⬡ PAINT SPECIFICATION TABLE

PAINT LOCATION	SUBSTRATE	SURFACE PREPARATION	PRIMER	TOP COAT	COLOR
EXTERIOR – ALL SURFACES, EXCEPT AS NOTED	CARBON STEEL	SSPC-10	PPG AMERLOCK 2 (OR APPROVED EQUAL) 4-6 MILS DFT	PPG AMERLOCK 2 (OR APPROVED EQUAL) 4-6 MILS DFT	WHITE
EXTERIOR – PLATFORM STEEL	CARBON STEEL	SSPC-10	PPG AMERLOCK 2 (OR APPROVED EQUAL) 4-6 MILS DFT	PPG AMERLOCK 2 (OR APPROVED EQUAL) 4-6 MILS DFT	WHITE
EXTERIOR – HANDRAIL	CARBON STEEL	SSPC-6	PPG AMERLOCK 2 (OR APPROVED EQUAL) 4-6 MILS DFT	PPG AMERLOCK 2 (OR APPROVED EQUAL) 4-6 MILS DFT	WHITE
EXTERIOR – LADDERS	CARBON STEEL	SSPC-6	PPG AMERLOCK 2 (OR APPROVED EQUAL) 4-6 MILS DFT	PPG AMERLOCK 2 (OR APPROVED EQUAL) 4-6 MILS DFT	WHITE
EXTERIOR – PLATFORM GRATING	CARBON STEEL				GALVANIZED
EXTERIOR – PLATE STEEL ROOF NON SKID WALKING SURFACES	CARBON STEEL	SSPC-10	PPG AMERLOCK 2 (OR APPROVED EQUAL) 4-6 MILS DFT	PPG AMERLOCK 2 (OR APPROVED EQUAL) 4-6 MILS DFT, WITH NON SKID ADDITIVE	WHITE
EXTERIOR – MOVABLE ROOF RAILS (DRIVE MOTOR CONTACT SURFACES)	CARBON STEEL	PREPARE RAIL SURFACES IN ACCORDANCE WITH GEAR MOTOR MANUFACTURER'S REQUIREMENTS.			
EXTERIOR – PERSONNEL DOORS	CARBON STEEL	PER DOOR MANUFACTURERS SPEC.	PPG AMERLOCK 2 (OR APPROVED EQUAL) 2-4 MILS DFT	PPG AMERLOCK 2 (OR APPROVED EQUAL) 2-4 MILS DFT	WHITE/RED SEE NOTE 1 BELOW
TELESCOPING DOORS	CARBON STEEL				GALVANIZED
INTERIOR NON EXPOSED STRUCTURAL STEEL	CARBON STEEL	SSPC-2	PPG AMERLOCK 2 (OR APPROVED EQUAL)2-4 MILS DFT	NONE	ANY
INTERIOR – HVAC GRILLS	CARBON STEEL OR ALUMINUM	SSPC-6	PPG AMERLOCK 2 (OR APPROVED EQUAL)4-6 MILS DFT	PPG AMERLOCK 2 (OR APPROVED EQUAL)4-6 MILS DFT	WHITE
IMP TRIM AND EXTERIOR FLASHING, 26 GAGE	GALVANIZED SHEET STEEL	PER MANUFACTURERS SPEC.		KYNAR 500 FINISH	WHITE

PAINT NOTES:
1. ALL DOORS THAT EXIT TO EXTERIOR ARE TO BE PAINTED RED ON EXTERIOR FACING SIDE.

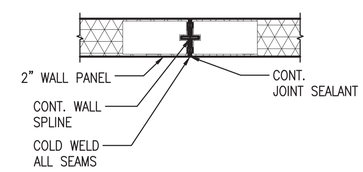

VERTICAL SEAM PLAN DETAIL (B4)
SCALE: 3"=1'-0"

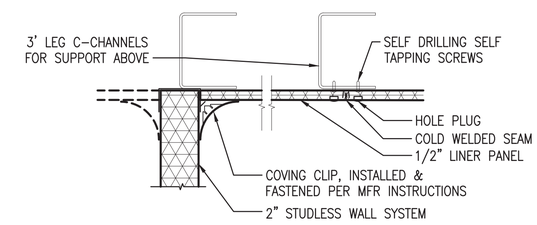

2" STUDLESS TO 1/2" LINER PANEL CEILING DETAIL (B5)
SCALE: 3"=1'-0" A-303

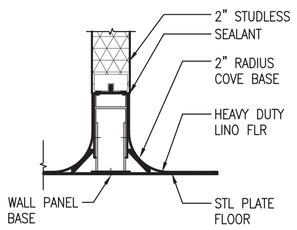

WALL BASE DETAIL (TWO SIDED) (A1)
SCALE: 3"=1'-0" A-303

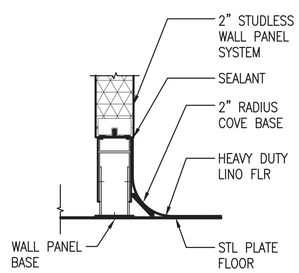

WALL BASE DETAIL (ONE SIDED) (A2)
SCALE: 3"=1'-0" A-303, A-507

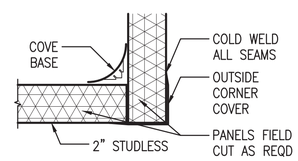

WALL OUTSIDE CORNER PLAN DETAIL (A3)
SCALE: 3"=1'-0"

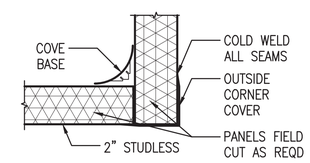

WALL INSIDE CORNER PLAN DETAIL (A4)
SCALE: 3"=1'-0"

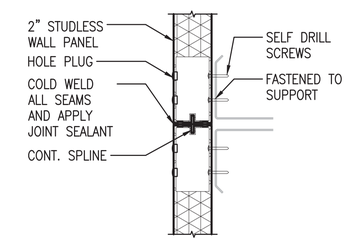

VERTICAL STACKING JOINT DETAIL (A5)
SCALE: 3"=1'-0"

0 3" 6" 9"
Scale: 3" = 1'-0"

SYM	DESCRIPTION	DATE	APPR
0	ISSUED FOR CONSTRUCTION	10/28/2016	CBC

NAVFAC

REGISTERED ARCHITECT DONALD M. DYER No. 859 STATE OF MAINE 10/28/16

Colby Company engineering

APPROVED
Donald W. Grunfeld
FOR COMMANDER NAVFAC

ACTIVITY
TIM FISHER
C. 2370.6 BRANCH HEAD

SATISFACTORY TO DATE 10/28/2016
DES GJN DRW GJN CHK DMD
PMDM PETER STOCKLESS
BRANCH MANAGER IAN BODWELL
FEAD/PM&E AMIN BAHROUR
FIRE PROTECTION PATRICK BAKAJ

DEPARTMENT OF THE NAVY
NAVAL FACILITIES ENGINEERING COMMAND
PUBLIC WORKS DEPARTMENT - MAINE
NAVAL FACILITIES ENGINEERING COMMAND ~ MID-ATLANTIC
NAVAL SHIPYARD - PORTSMOUTH, NH
KITTERY, ME
PORTSMOUTH NAVAL SHIPYARD
DRY DOCK #1 DEFUELING COMPLEX
M-140 COMPLEX
ROOM FINISH AND DOOR SCHEDULES

EPROJECT NO.: 1363311
CONSTR. CONTR. NO. N40085-17-C-5002
NAVFAC DRAWING NO. 12734906
SHEET 123 OF 188
A-601 DD1-16-987

DRAWFORM REVISION: 10 OCTOBER 2014

10/28/2016 6:48:04 AM X:\297 PORTSMOUTH NAVAL SHIPYARD\297.005.001 - DD#1 DEFUELING COMPLEX DESIGN\DRAWINGS\M140\SHEETS\A-601.DWG

DOOR SCHEDULE

ID	LOCATION	TYPE	HEIGHT	WIDTH	THICK NESS	DOOR MATL	GLAZING	FRAME MATL	FRAME TYPE	HEADER	JAMB	SILL	FIRE LABEL	HDWR SET	ACCESSORIES	REMARKS
001	ENTRY VESTIBULE	A	7'–0"	3'–0"	1 3/4"	HM	–	HM	F1	D1/A–603	C1/A–603	B1/A–603	90MIN	4	–	
002	RAILCAR ENCLOSURE (WEST)	A	7'–0"	3'–0"	1 3/4"	HM	–	HM	F1	D2/A–603	C2/A–603	B2/A–603	–	5	–	
003	STORAGE	A	7'–0"	3'–0"	1 3/4"	HM	–	HM	F1	D1/A–603	C1/A–603	B1/A–603	90MIN	4	–	
004	RAILCAR ENCLOSURE (EAST)	A	7'–0"	3'–0"	1 3/4"	HM	–	HM	F1	D1/A–603	C1/A–603	B1/A–603	–	5	–	
005	EXIT STAIR	A	7'–0"	3'–0"	1 3/4"	HM	–	HM	F1	D3/A–603	C3/A–603	B3/A–603	90MIN	8	–	
006	M–140–4	A	7'–0"	3'–0"	1 3/4"	HM	–	HM	F1	D1/A–603	C1/A–603	B1/A–601	90MIN	8	–	
007	RAILCAR ENCLOSURE (WEST)	D	18'–0"	16'–0"	0'–1"	STL	–	STL	F3	C2/A–604	B2/A–604	–	–	1A	–	NOTE 3
008	STORAGE	D	12'–0"	8'–0"	0'–1"	STL	–	STL	F3	C4/A–603	B4/A–603	A4/A–603	90MIN	1A		NOTE 3
101	STAIRTOWER	A	7'–0"	3'–0"	1 3/4"	HM	–	HM	F1	A1/A–603	A2/A–603	A3/A–603	90MIN	4	–	
102	ACE–3 PASSAGEWAY	F	7'–0"	3'–0"	1 3/4"	HM	–	HM	F1	B1/A–605	C4/A–605	A1/A–605	90MIN	9	–	NOTE 2
103	DRE–7 PASSAGEWAY	F	7'–0"	3'–0"	1 3/4"	HM	–	HM	F1	B1/A–605	C4/A–605	A1/A–605	90MIN	9	–	NOTE 2
104	SOUTH HALLWAY	B	7'–0"	3'–0"	2"	SIWS	–	ALUM	F2	SEE NOTE 1				8	–	2" STUDLESS DOOR
105	M–140–4 VESTIBULE	C	7'–0"	6'–0"	2"	SIWS	–	ALUM	F2	SEE NOTE 1				10	–	2" STUDLESS DOOR
106	M–140–3 VESTIBULE	C	7'–0"	6'–0"	2"	SIWS	–	ALUM	F2	SEE NOTE 1				10	–	2" STUDLESS DOOR
107	STAGING AREA ENTRANCE	A	7'–0"	3'–0"	2"	SIWS	–	ALUM	F2	SEE NOTE 1				8	–	2" STUDLESS DOOR, MAGNETIC SWITCH
108	STAGING AREA HATCH	H	4'–0"	4'–0"	0'–1"	STL	–	STL	F5	–	A4/A–605	–	–	1B		LOCKABLE AND OPENABLE FROM LEVEL 01, DOUBLE LEAF, NOTE 5
109	DEMIN HATCH	H	7'–0"	7'–0"	0'–1"	STL	–	STL	F5	–	A1/A–305	–		2		LOCKABLE AND OPENABLE FROM EXTERIOR, DOUBLE LEAF
110	DEMIN HATCH	H	7'–0"	7'–0"	0'–1"	STL	–	STL	F5	–	A1/A–305	–		2		LOCKABLE AND OPENABLE FROM EXTERIOR, DOUBLE LEAF
111	DEMIN HATCH	H	7'–0"	7'–0"	0'–1"	STL	–	STL	F5	–	A1/A–305	–		2		LOCKABLE AND OPENABLE FROM EXTERIOR, DOUBLE LEAF
112	DEMIN HATCH	H	7'–0"	7'–0"	0'–1"	STL	–	STL	F5	–	A1/A–305	–		2		LOCKABLE AND OPENABLE FROM EXTERIOR, DOUBLE LEAF
113	ACE–3 PASSAGEWAY (BASE BID)	F	7'–0"	3'–0"	1 3/4"	HM	–	HM	F1	B1/A–605	C4/A–605	A1/A–605	90MIN	9	–	NOTE 2
201	STAIRTOWER	A	7'–0"	3'–0"	1 3/4"	HM	–	HM	F1	A1/A–603	A2/A–603	A3/A–603	90MIN	5	–	
202	M–140–4	B	7'–0"	3'–0"	2"	SIWS	–	ALUM	F2	SEE NOTE 1				6	–	2" STUDLESS DOOR
203	M–140–3	B	7'–0"	3'–0"	2"	SIWS	–	ALUM	F2	SEE NOTE 1				6	–	2" STUDLESS DOOR
204	M–140–4	B	7'–0"	3'–0"	2"	SIWS	–	ALUM	F2	SEE NOTE 1				6	–	2" STUDLESS DOOR
205	M–140–4 VESTIBULE	B	7'–0"	3'–0"	2"	SIWS	–	ALUM	F2	SEE NOTE 1				9	–	2" STUDLESS DOOR
206	M–140–3 VESTIBULE	B	7'–0"	3'–0"	2"	SIWS	–	ALUM	F2	SEE NOTE 1				9	–	2" STUDLESS DOOR
207	M–140–3	B	7'–0"	3'–0"	2"	SIWS	–	ALUM	F2	SEE NOTE 1				6	–	2" STUDLESS DOOR
301	STAIRTOWER	A	7'–0"	3'–0"	1 3/4"	HM	–	HM	F1	A1/A–603	A2/A–603	A3/A–603	90MIN	9	–	
302	M–140–4	A	7'–0"	3'–0"	2"	SIWS	–	ALUM	F2	SEE NOTE 1				7	–	2" STUDLESS DOOR
303	M–140–3	A	7'–0"	3'–0"	2"	SIWS	–	ALUM	F2	SEE NOTE 1				7	–	2" STUDLESS DOOR
304	M–140–4 VESTIBULE	B	7'–0"	3'–0"	2"	SIWS	–	ALUM	F2	SEE NOTE 1				6	–	2" STUDLESS DOOR
305	M–140–3 VESTIBULE	B	7'–0"	3'–0"	2"	SIWS	–	ALUM	F2	SEE NOTE 1				6	–	2" STUDLESS DOOR
306	CENTRAL STAGING ROOF	A	7'–0"	3'–0"	1 3/4"	HM	–	HM	F1	–	A4/A–605	A2/A–604	–	11	–	3" HIGH THRESHOLD
307	CENTRAL STAGING HATCH	H	6'–0"	6'–0"	1"	STL	–	STL	F5	–	A4/A–605	–	–	2	–	LOCKABLE AND OPENABLE FROM EXTERIOR, DOUBLE LEAF
401	STAIRTOWER	A	7'–0"	3'–0"	1 3/4"	HM	–	HM	F1	A1/A–603	A2/A–603	A3/A–603	90MIN	3B	–	
CR1	M–140–4 CRANE PLATFORM	A	7'–0"	3'–0"	1 3/4"	HM	–	HM	F1	D2/A–603	C2/A–603	B2/A–603	–	3A	–	
CR2	M–140–3 CRANE PLATFORM	A	7'–0"	3'–0"	1 3/4"	HM	–	HM	F1	D2/A–603	C2/A–603	B2/A–603	–	3A	–	

DOOR ABBREVIATIONS:
HM – HOLLOW METAL
STL – STEEL
ALUM – ALUMINUM
SIWS – STUDLESS INTERIOR WALL SYSTEM (SEE NOTE 1)

DOOR NOTES

1. ALL INTERIOR DOORS TO BE PART OF 2" STUDLESS INTERIOR WALL SYSTEM AND BE PROVIDED BY WALL SYSTEM MANUFACTURER. SEE SPEC SECTION 09 73 00 FOR ADDITIONAL DETAILS ON THESE INTERIOR DOORS.
2. DOOR LOUVER TO BE 90MIN FIRE–RATED WITH FUSIBLE LINK REMOVABLE FRAMED SCREEN. SEE D5/A–604 AND SEE MECHANICAL.
3. ENSURE ROLL–UP DOOR IS FREE OF ANY GAPS AROUND ROLL–UP DOOR MECHANISM.
4. ALL PERSONNEL DOORS EXITING TO EXTERIOR TO BE PAINTED RED
5. TO BE CENTERED BELOW MONORAIL ABOVE, SEE STRUCT.
4. ALL DOOR FRAMES WITHIN M140 TO BE 5 3/4" DEEP. CONTRACTOR SHALL VERIFY ALL DOOR FRAME THROAT SIZES.

DOOR TYPES (A1)

SCALE: NTS

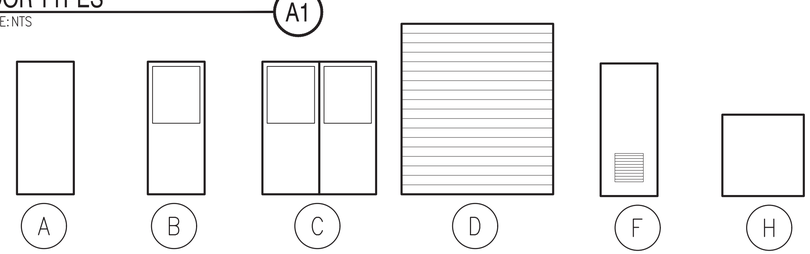

FRAME TYPES (A3)

SCALE: NTS

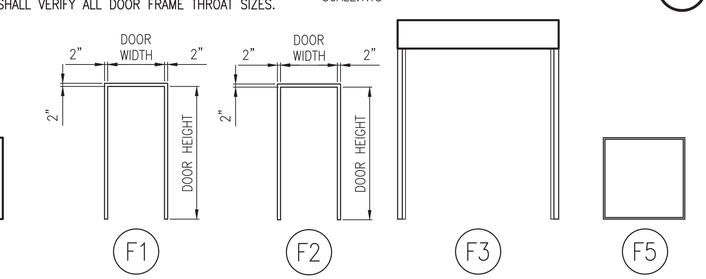

GENERAL NOTES

1. SEE DRAWING A–001 FOR GENERAL NOTES, ABBREVIATIONS AND LEGEND.
2. ENSURE AIRTIGHT SEAL AROUND ENTIRE PERIMETER OF DOORS AND HATCHES WITH ANY POTENTIAL AIR LEAKAGE NOT TO EXCEED 0.5 CUBIC FEET PER MINUTE OF AIR PER SQUARE FOOT OF OPENING AREA WHEN TESTED IN ACCORDANCE WITH ASTM E283. ENSURE ZERO DAYLIGHT TRANSMISSION AROUND OPENINGS WHEN IN CLOSED POSITIONS.

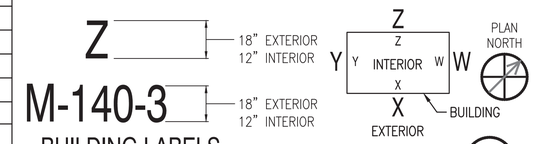

BUILDING LABELS (C4)

SCALE: NTS

A–201, A–201A, A–202, A–202A, A–203

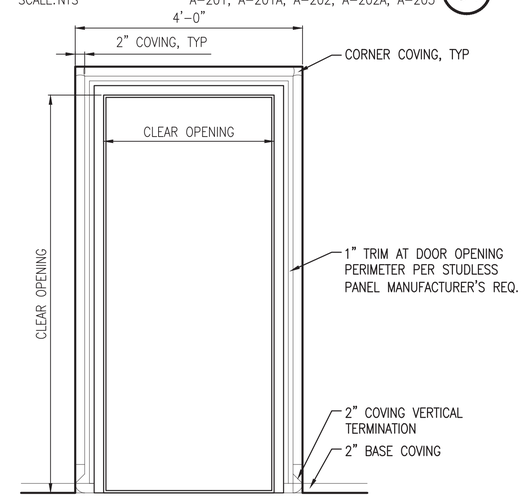

INTERIOR DOOR ELEVATION DOORS 101, 102, 103, 201, 301, CR1, CR2 (B4)

SCALE: 3/4" = 1'–0"

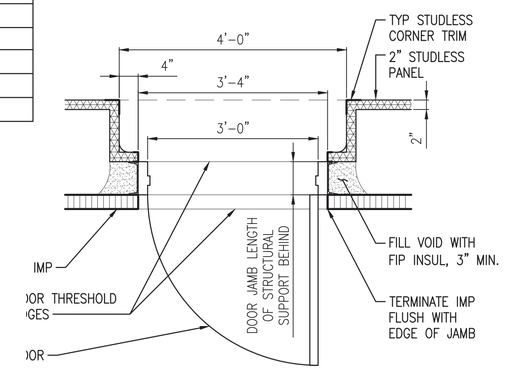

PARTIAL PLAN SHOWING OPENING AT 2" STUDLESS DOORS 101, 201, 301, CR1, CR2 (A4)

SCALE: 3/4" = 1'–0"

DETAIL NOTE:
INTENT OF DETAILS IS TO SHOW TYPICAL FINISHING OF 2" STUDLESS INTERIOR PANEL AT DOOR. FOLLOW MANUFACTURER'S REQUIREMENTS FOR TRIM AND CONT. SEAL ALL EDGES, SEAMS AND EDGES THROUGHOUT.

0 1' 2' 3'
Scale: 3/4" = 1'–0"

SYM	DESCRIPTION	DATE	APPR
0	ISSUED FOR CONSTRUCTION	10/28/2016	CBC

NAVFAC

REGISTERED ARCHITECT DONALD M. DYER No. 859 STATE OF MAINE 10/28/16

Colby Company engineering

A/E INFO

APPROVED
David W. Thurnfield
FOR COMMANDER NAVFAC

ACTIVITY
TIM FISHER
C. 2370.6 BRANCH HEAD

SATISFACTORY TO DATE 10/28/2016

DES GJN | DRW GJN | CHK DMD
PMDM PETER STOCKLESS
BRANCH MANAGER IAN BODWELL
FEAD/PM&E AMIN BAHROUR
FIRE PROTECTION PATRICK BAKAJ

DEPARTMENT OF THE NAVY
NAVAL FACILITIES ENGINEERING COMMAND
PUBLIC WORKS DEPARTMENT - MAINE

NAVAL FACILITIES ENGINEERING COMMAND ~ MID-ATLANTIC
NAVAL SHIPYARD - PORTSMOUTH, NH

PORTSMOUTH NAVAL SHIPYARD
KITTERY, ME
DRY DOCK #1 DEFUELING COMPLEX
M-140 COMPLEX

DOOR DETAILS

EPROJECT NO.: 1363311
CONSTR. CONTR. NO. N40085-17-C-5002
NAVFAC DRAWING NO. 12734907
SHEET 124 OF 188
A-602 | DD1-16-988

DRAWFORM REVISION: 10 OCTOBER 2014

10/28/2016 6:48:19 AM X:\297 PORTSMOUTH NAVAL SHIPYARD\297.005.001 - DD#1 DEFUELING COMPLEX DESIGN\DRAWINGS\M140\SHEETS\A-602.DWG

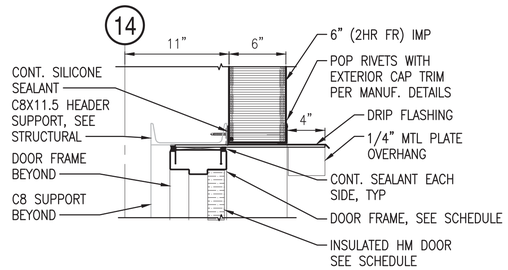

EXTERIOR DOOR HEADER, 6" IMP (D1)

SCALE: 1-1/2" = 1'-0" A-602

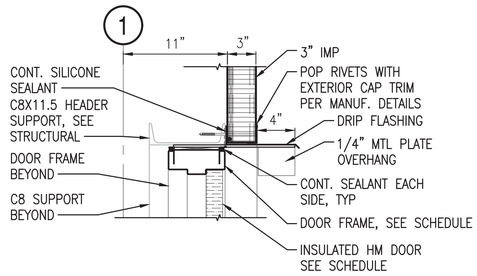

EXTERIOR DOOR HEADER, 3" IMP (D2)

SCALE: 1-1/2" = 1'-0" A-602

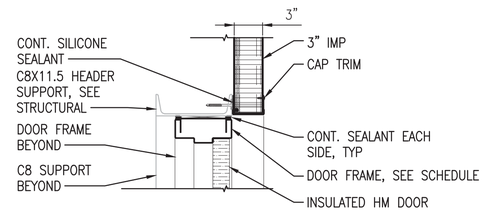

DOOR 005 HEADER, 3" IMP (D3)

SCALE: 1-1/2" = 1'-0" A-602

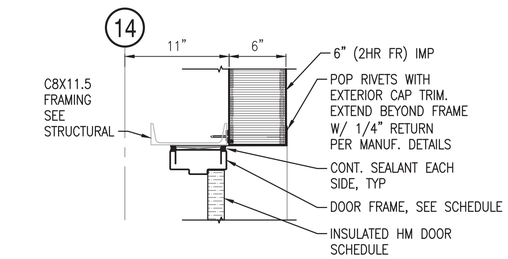

EXTERIOR DOOR JAMB, 6" IMP (C1)

SCALE: 1-1/2" = 1'-0" A-602

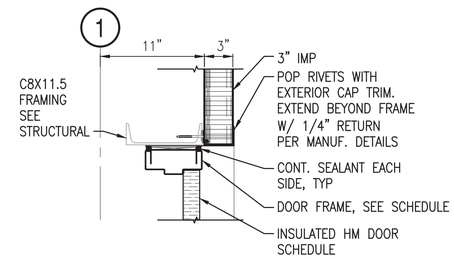

EXTERIOR DOOR JAMB, 3" IMP (C2)

SCALE: 1-1/2" = 1'-0" A-602

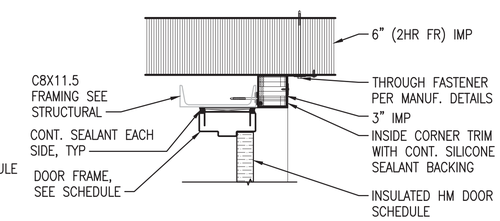

DOOR 005 JAMB, 3" IMP (C3)

SCALE: 1-1/2" = 1'-0" A-602

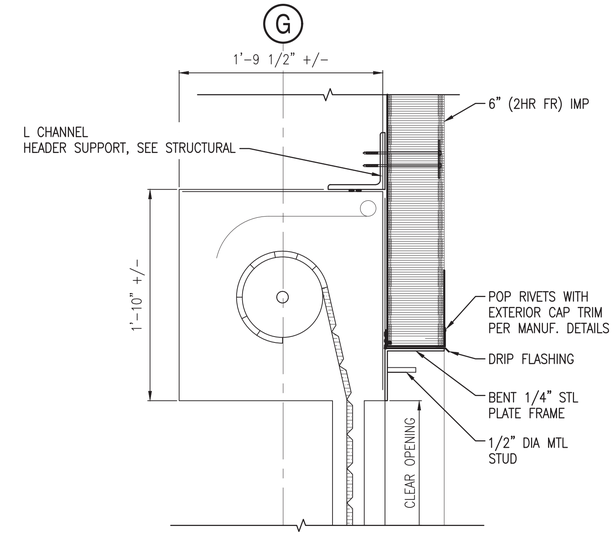

DOOR 008 OVERHEAD DOOR HEAD (C4)

SCALE: 1 1/2" = 1'-0" A-602

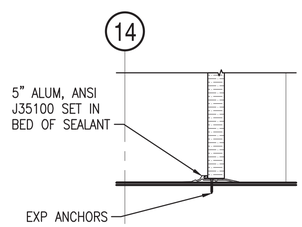

EXTERIOR DOOR SILL, 6" IMP (B1)

SCALE: 1-1/2" = 1'-0" A-602

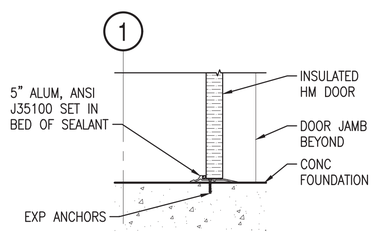

EXTERIOR DOOR SILL, 3" IMP (B2)

SCALE: 1-1/2" = 1'-0" A-602

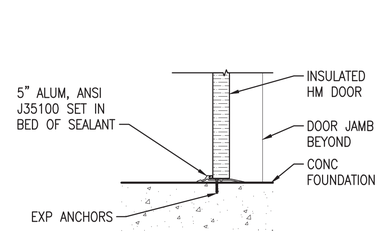

DOOR 005 SILL, 3" IMP (B3)

SCALE: 1-1/2" = 1'-0" A-602

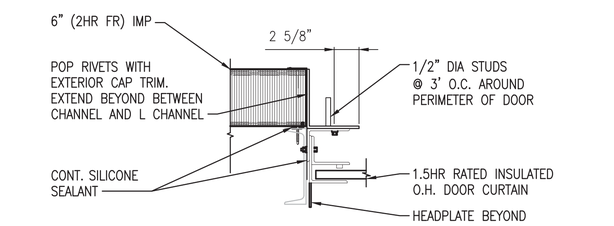

DOOR 008 OVERHEAD DOOR JAMB (B4)

SCALE: 1-1/2" = 1'-0" A-602

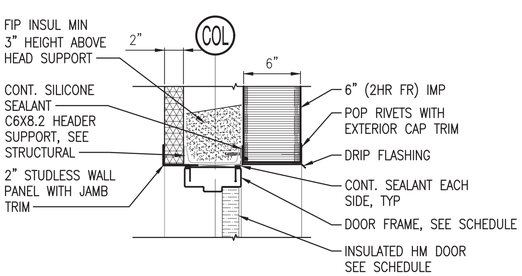

STAIRTOWER HEAD, 6" IMP (A1)

SCALE: 1-1/2" = 1'-0" A-602

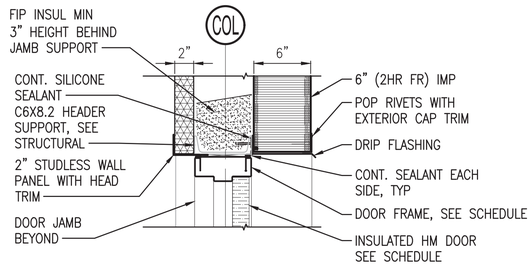

STAIRTOWER JAMB, 6" IMP (A2)

SCALE: 1-1/2" = 1'-0" A-602

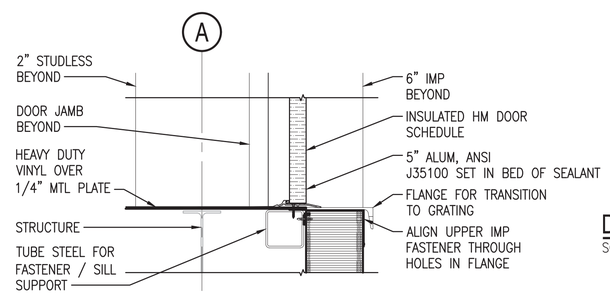

STAIRTOWER DOOR SILL, 6" IMP (A3)

SCALE: 1-1/2" = 1'-0" A-602

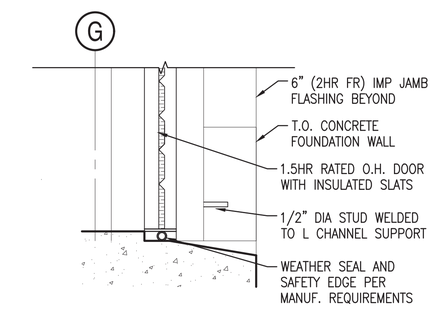

DOOR 008 OVERHEAD DOOR SILL (A4)

SCALE: 1-1/2" = 1'-0" A-602

0 1/2' 1' 1 1/2'
Scale: 1 1/2" = 1'-0"

SYM	DESCRIPTION	DATE	APPR
0	ISSUED FOR CONSTRUCTION	10/28/2016	CBC

NAVFAC

REGISTERED ARCHITECT DONALD M. DYER No. 859 STATE OF MAINE 10/28/16

Colby Company engineering

A/E INFO

APPROVED David W. Trumfield
FOR COMMANDER NAVFAC

ACTIVITY TIM FISHER C. 2370.6 BRANCH HEAD

SATISFACTORY TO DATE 10/28/2016

DES GJN | DRW GJN | CHK DMD

PM/CM PETER STOCKLESS

BRANCH MANAGER IAN BODWELL

FEAD/PM&E AMIN BAHROUR

FIRE PROTECTION PATRICK BAKAJ

DEPARTMENT OF THE NAVY
NAVAL FACILITIES ENGINEERING COMMAND
PUBLIC WORKS DEPARTMENT - MAINE

NAVAL FACILITIES ENGINEERING COMMAND ~ MID-ATLANTIC
NAVAL SHIPYARD - PORTSMOUTH, NH

PORTSMOUTH NAVAL SHIPYARD
KITTERY, ME

DRY DOCK #1 DEFUELING COMPLEX
M-140 COMPLEX

DOOR DETAILS

EPROJECT NO.: 1363311

CONSTR. CONTR. NO. N40085-17-C-5002

NAVFAC DRAWING NO. 12734908

SHEET 125 OF 188

A-603 | DD1-16-989

DRAWFORM REVISION: 10 OCTOBER 2014

10/28/2016 6:48:36 AM X:\297 PORTSMOUTH NAVAL SHIPYARD\297.005.001 - DD#1 DEFUELING COMPLEX DESIGN\DRAWINGS\M140\SHEETS\A-603.DWG

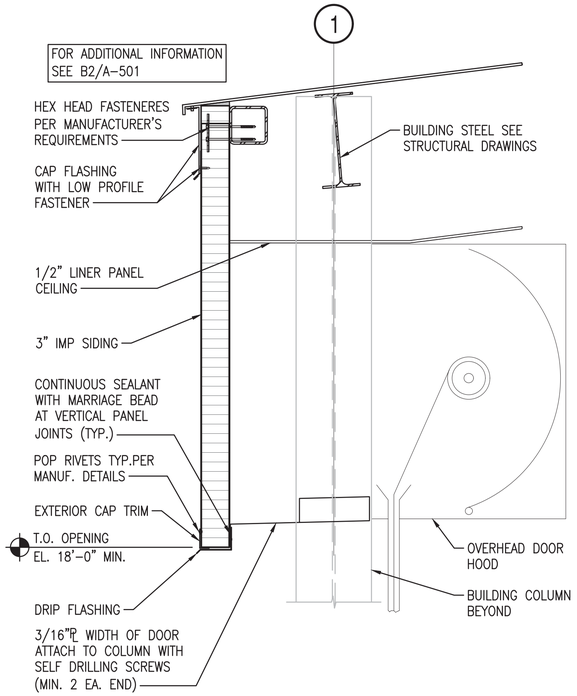

DOOR 007 OVERHEAD DOOR HEAD (C2)

SCALE: 1 1/2"=1'-0" A-602

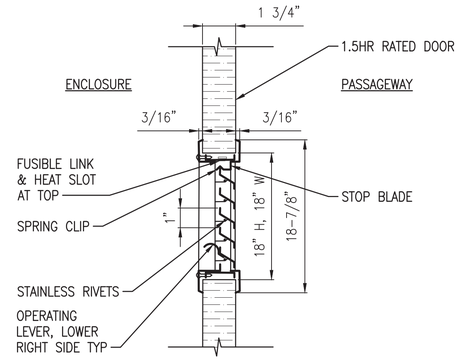

DOOR FUSIBLE LINK LOUVER DETAIL (D5)

SCALE: 3" = 1'-0"

NOTES:
1. ANEMOSTAT FLDL-UL OR APPROVED EQUAL
2. COORDINATE WITH MECHANICAL DETAILS FOR DOOR MOUNTED DAMPER AND FILTER.

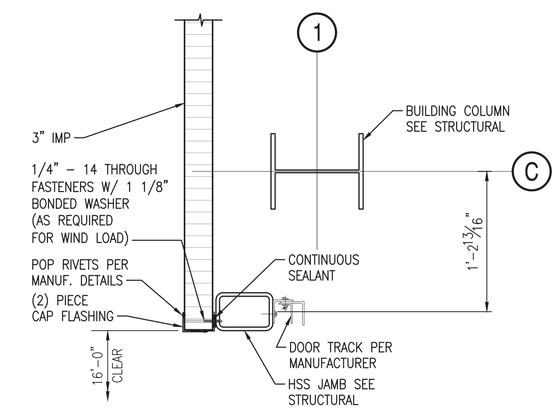

DOOR 007 OVERHEAD DOOR JAMB (B2)

SCALE: 1 1/2"=1'-0" A-602

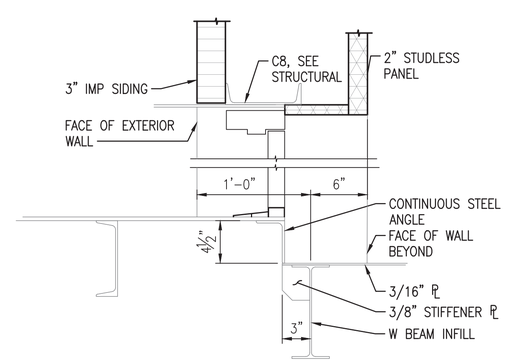

DOOR 306 SILL DETAIL (A2)

SCALE: 1 1/2" = 1'-0" A-602

0 3" 6" 9"
Scale: 3" = 1'-0"

0 1/2' 1' 1 1/2'
Scale: 1 1/2" = 1'-0"

SYM	DESCRIPTION	DATE	APPR
0	ISSUED FOR CONSTRUCTION	10/28/2016	CBC

NAVFAC

REGISTERED ARCHITECT DONALD M. DYER No. 859 STATE OF MAINE 10/28/16

Colby Company engineering

A/E INFO

APPROVED David W. Thurnfield
FOR COMMANDER NAVFAC

ACTIVITY: TIM FISHER C. 2370.6 BRANCH HEAD

SATISFACTORY TO DATE 10/28/2016

DES GJN DRW GJN CHK DMD

PMDM PETER STOCKLESS

BRANCH MANAGER IAN BODWELL

FEA/DPM&E AMIN BAHROUR

FIRE PROTECTION PATRICK BAKAJ

DEPARTMENT OF THE NAVY
NAVAL FACILITIES ENGINEERING COMMAND
PUBLIC WORKS DEPARTMENT - MAINE

NAVAL FACILITIES ENGINEERING COMMAND ~ MID-ATLANTIC
NAVAL SHIPYARD - PORTSMOUTH, NH

PORTSMOUTH NAVAL SHIPYARD
KITTERY, ME

DRY DOCK #1 DEFUELING COMPLEX
M-140 COMPLEX

HATCH DETAILS

EPROJECT NO.: 1363311

CONSTR. CONTR. NO. N40085-17-C-5002

NAVFAC DRAWING NO. 12734909

SHEET 126 OF 188

A-604 | DD1-16-990

DRAWFORM REVISION: 10 OCTOBER 2014

10/28/2016 6:48:49 AM X:\297 PORTSMOUTH NAVAL SHIPYARD\297.005.001 - DD#1 DEFUELING COMPLEX DESIGN\DRAWINGS\M140\SHEETS\A-604.DWG

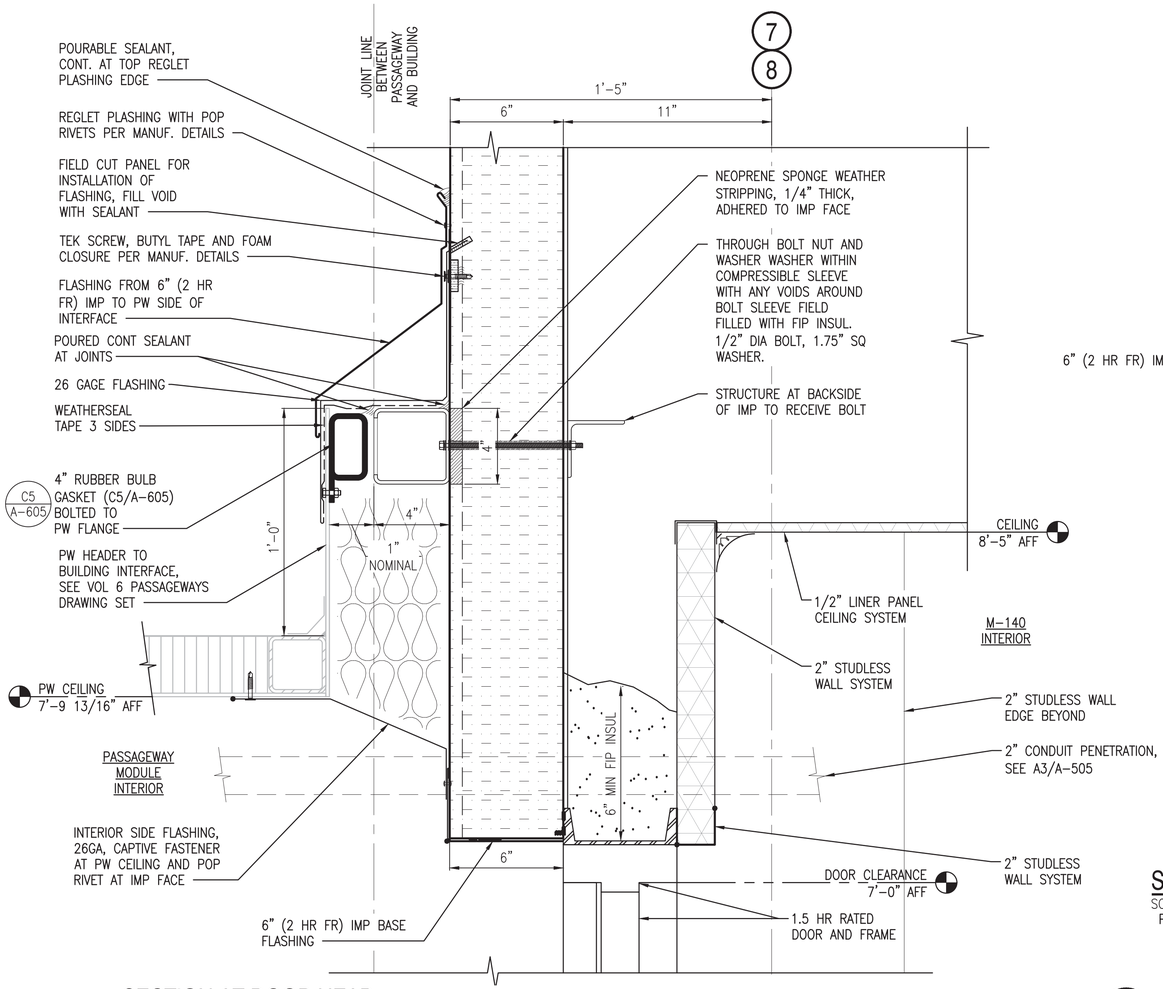

SECTION AT DOOR HEAD

SCALE: 3"=1'-0" — A-602 (B1)

PASSAGEWAYS PW-05/PW-06 TO M-140

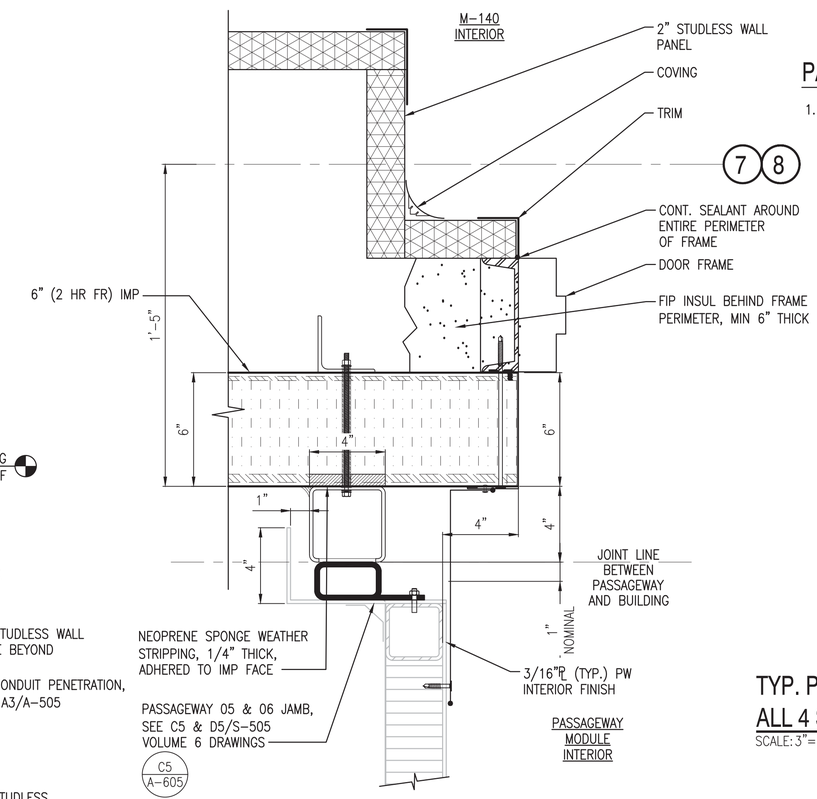

SECTION AT DOOR THRESHOLD

SCALE: 3"=1'-0" — A-602 (C4)

PASSAGEWAYS PW-05/PW-06 TO M-140

NOTES

1. SEE DRAWING A-001 FOR GENERAL NOTES, ABBREVIATIONS AND LEGEND.

PASSAGEWAY CONNECTION NOTES

1. CONNECTION AT PASSAGEWAY TO ENCLOSURE IS TO BE WEATHER AND AIR TIGHT AROUND ENTIRE PERIMETER. GASKETS TO BE ATTACHED TO PASSAGEWAY FLANGES AND BE UNDER COMPRESSION WHEN PASSAGEWAY MODULE IS IN FINAL LOCATION ON SITE.

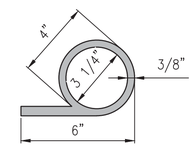

TYP. P BULB GASKET AT JOINT LINE ALL 4 SIDES OF INTERFACE

SCALE: 3"=1'-0" — A-605 (C5)

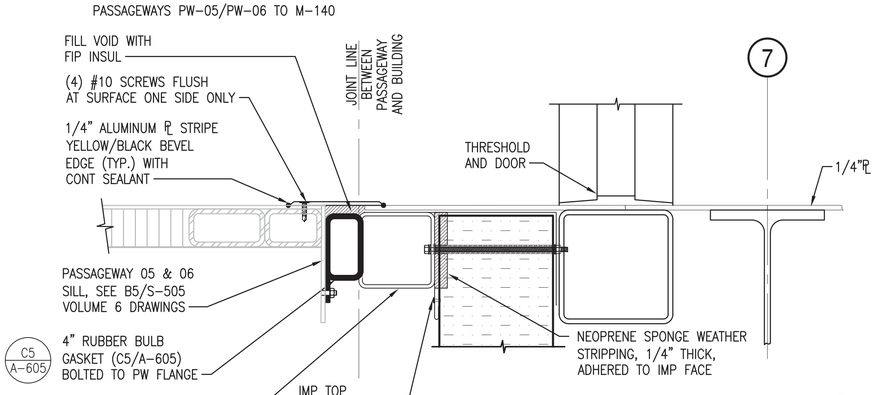

SECTION AT DOOR SILL

SCALE: 3"=1'-0" — A-602 (A1)

PASSAGEWAYS PW-05/PW-06 TO M-140

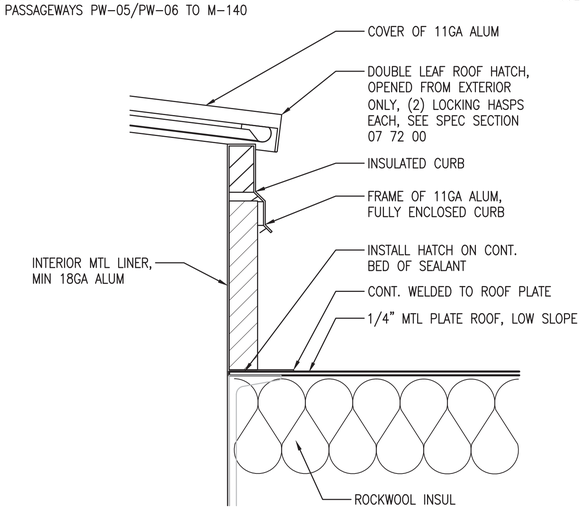

ROOF CURB, TYP

SCALE: 3" = 1'-0" — A-305, A-602 (A4)

Scale: 3" = 1'-0"

Scale: 1 1/2" = 1'-0"

SYM	DESCRIPTION	DATE	APPR
0	ISSUED FOR CONSTRUCTION	10/28/2016	CBC

NAVFAC

REGISTERED ARCHITECT DONALD M. DYER No. 859 STATE OF MAINE 10/28/16

Colby Company engineering

APPROVED: David W. Trumfield
FOR COMMANDER NAVFAC
ACTIVITY: TIM FISHER, C. 2370.6 BRANCH HEAD
SATISFACTORY TO DATE 10/28/2016
DES GJN | DRW GJN | CHK DMD
PMDM: PETER STOCKLESS
BRANCH MANAGER: IAN BODWELL
FEA/DPM&E: AMIN BAHROUR
FIRE PROTECTION: PATRICK BAKAJ

DEPARTMENT OF THE NAVY
NAVAL FACILITIES ENGINEERING COMMAND ~ MID-ATLANTIC
PUBLIC WORKS DEPARTMENT - MAINE
NAVAL FACILITIES ENGINEERING COMMAND
NAVAL SHIPYARD - PORTSMOUTH, NH
PORTSMOUTH NAVAL SHIPYARD
KITTERY, ME
DRY DOCK #1 DEFUELING COMPLEX
M-140 COMPLEX
DOOR DETAILS

EPROJECT NO.: 1363311
CONSTR. CONTR. NO. N40085-17-C-5002
NAVFAC DRAWING NO. 12734910
SHEET 127 OF 188
A-605 | DD1-16-991

DRAWFORM REVISION: 10 OCTOBER 2014

10/28/2016 6:48:56 AM X:\297 PORTSMOUTH NAVAL SHIPYARD\297.005.001 - DD#1 DEFUELING COMPLEX DESIGN\DRAWINGS\M140\SHEETS\A-605.DWG

NOTES

1. SEE A–001 FOR GENERAL NOTES, ABBREVIATIONS, AND LEGEND.
2. PERSPECTIVE SECTION IS TO BE USED TO UNDERSTAND SPACIAL RELATIONSHIPS, BOUNDARIES AND MATERIALS AND SHOULD NOT BE MEASURED FROM OR UTILIZED FOR CONSTRUCTION IN ANY WAY. SEE APPLICABLE DRAWINGS AND SPECIFICATION SECTIONS FOR DETAILED INFORMATION.

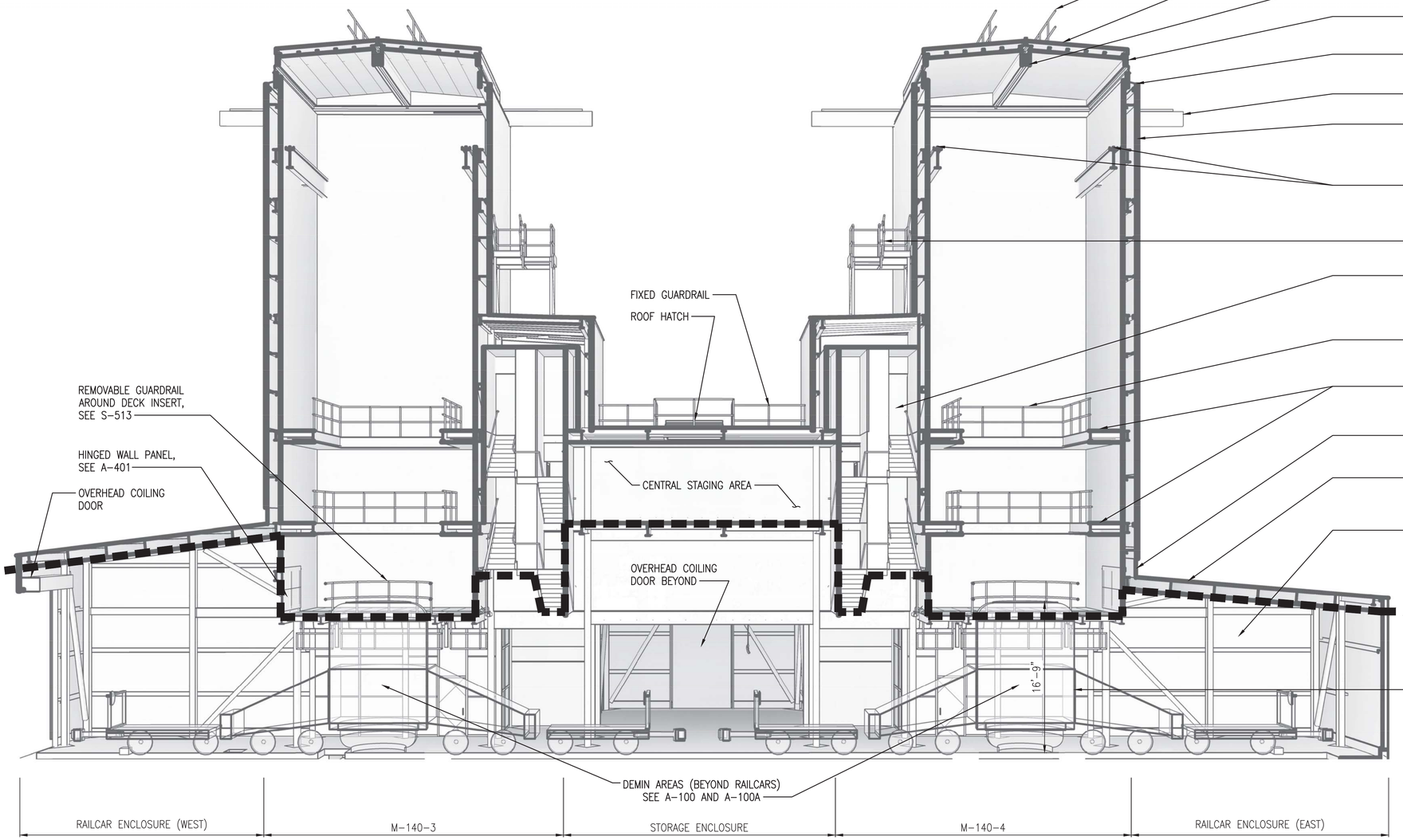

ENCLOSURE SECTION PERSPECTIVE (SOUTH)

SCALE: NTS

NOTE: SECTION CUT TAKEN AT CENTERLINE OF RAILCAR AND FACES NORTH DIRECTION

C4

0 4' 8' 16'
Scale: 1/8" = 1'–0"

SYM	DESCRIPTION	DATE	APPR
0	ISSUED FOR CONSTRUCTION	10/28/2016	CBC

NAVFAC

REGISTERED ARCHITECT DONALD M. DYER No. 859 STATE OF MAINE 10/28/16

Colby Company engineering

A/E INFO

APPROVED
David W. Grunfeld
FOR COMMANDER NAVFAC

ACTIVITY
TIM FISHER
C. 2370.6 BRANCH HEAD

SATISFACTORY TO DATE 10/28/2016

DES GJN DRW GJN CHK DMD

PMDM PETER STOCKLESS

BRANCH MANAGER IAN BODWELL

FEA/DPM&E AMIN BAHROUR

FIRE PROTECTION PATRICK BAKAJ

DEPARTMENT OF THE NAVY
NAVAL FACILITIES ENGINEERING COMMAND
PUBLIC WORKS DEPARTMENT, MAINE

NAVAL FACILITIES ENGINEERING COMMAND ~ MID-ATLANTIC
NAVAL SHIPYARD, PORTSMOUTH, NH

PORTSMOUTH NAVAL SHIPYARD
KITTERY, ME

DRY DOCK #1 DEFUELING COMPLEX
M-140 COMPLEX

ENCLOSURE SECTION PERSPECTIVE

EPROJECT NO.: 1363311

CONSTR. CONTR. NO.
N40085-17-C-5002

NAVFAC DRAWING NO.
12734911

SHEET 128 OF 188

A-901 | DD1-16-992

DRAWFORM REVISION: 10 OCTOBER 2014

10/28/2016 6:49:04 AM X:\297 PORTSMOUTH NAVAL SHIPYARD\297.005.001 - DD#1 DEFUELING COMPLEX DESIGN\DRAWINGS\M140\SHEETS\A-901.DWG

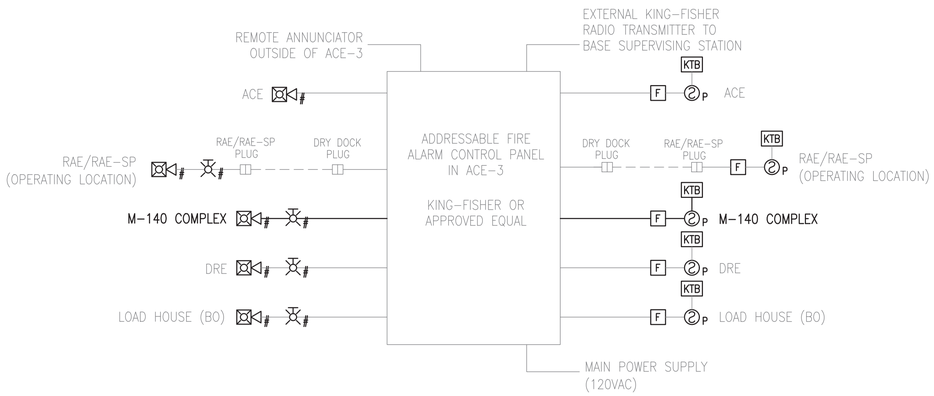

NOTES:
1. THIS SCHEMATIC IS FOR REQUIRED SYSTEM COMPONENT ILLUSTRATION ONLY. REFER TO SITE PLAN FA-101 FOR ZONING REQUIREMENTS AND THE FLOOR PLANS FOR EACH ENCLOSURE TO DETERMINE DEVICE QUANTITIES.
2. INCLUDE PASSAGEWAY SMOKE DETECTORS INDICATED ON SITE PACKAGE SHEET FA-101 WITH THE M-140 STORAGE ENCLOSURE TRANSMISSION AND DISCONNECT ZONES (TZ-10 AND DZ-10).
3. PROVIDE MONITOR MODULE FOR M-140 COMPLEX STAIR TOWER DEVICES. SEE SHEET FA-104.

FIRE ALARM RISER DIAGRAM (C1)

SCALE: NTS

SYSTEM OUTPUTS

	SYSTEM INPUTS	A: ACTUATE COMMON ALARM SIGNAL INDICATOR	B: ACTUATE AUDIBLE/VISUAL ALARM SIGNAL (NOTE 1)	C: ACTUATE COMMON TROUBLE SIGNAL INDICATOR	D: ACTUATE AUDIBLE/VISUAL TROUBLE SIGNAL INDICATOR	E: ACTUATE APPROPRIATE LOCATION INDICATOR	F: DISPLAY CHANGE OF STATUS AT FACP AND FAA	G: TRANSMIT SIGNAL TO BASE SUPERVISING STATION
1	MANUAL FIRE ALARM BOX	●	●			●	●	●
2	SMOKE DETECTOR	●	●			●	●	●
3	OPEN CIRCUIT			●	●		●	●
4	SMOKE DETECTOR - DIRTY			●	●	●	●	
5	GROUND FAULT			●	●		●	●
6	NOTIFICATION APPLIANCE CIRCUIT SHORT			●	●		●	●
7	FIRE ALARM AC FAILURE			●	●		●	●
8	FIRE ALARM SYSTEM LOW BATTERY			●	●		●	●
		A	B	C	D	E	F	G

NOTES:
1. AUDIBLE/VISUAL FIRE ALARM SIGNAL SHALL BE TRANSMITTED TO EVERY NOTIFICATION APPLIANCE IN THE COMPLEX REGARDLESS OF WHICH INITIATING ZONE GENERATES THE ALARM.
2. IF ANY INITIATING DEVICE IN THE M-140 COMPLEX GENERATES AN ALARM SIGNAL, THE HVLS FAN AT THE M-140 COMPLEX GROUND LEVEL CEILING (SEE FA-101/101A) SHALL BE DE-ENERGIZED.

FIRE ALARM INPUT/OUTPUT MATRIX (A2)

SCALE: NTS

LEGEND

- F WP — FIRE ALARM MANUAL PULL STATION WEATHERPROOF
- P — SMOKE DETECTOR. CEILING MOUNTED
  - A – AUXILIARY CONTACT
  - H – HEAT/SMOKE
  - P – PHOTOELECTRIC SMOKE
  - PH – PHOTOELECTRIC/HEAT SMOKE
- P — SMOKE DETECTOR, WALL MOUNTED
  - P – PHOTOELECTRIC SMOKE
- WP — FIRE ALARM HORN/STROBE NOTIFICATION APPLIANCE (GENERAL EVACUATION) – CLEAR STROBE COLOR
  - WP – INDICATES WEATHER PROOF
  - 75 – INDICATES CANDELA INTENSITY
- 75 — FIRE ALARM VISIBLE ONLY (STROBE) NOTIFICATION APPLIANCE, CEILING MOUNTED, CLEAR STROBE
  - 75 – INDICATES CANDELA INTENSITY
- 75 — FIRE ALARM VISIBLE ONLY (STROBE) NOTIFICATION APPLIANCE, WALL MOUNTED, CLEAR STROBE
- AM I/O — FIRE ALARM ADDRESSABLE MODULE
  - I/O – INDICATES INPUT OR OUTPUT
- KTB — KEYED TEST BOX FOR REMOTE-MOUNTED AREA SMOKE DETECTORS PER PNSY STANDARDS

ABBREVIATIONS

AMP	AMPERE
AFF	ABOVE FINISHED FLOOR
AFG	ABOVE FINISHED GRADE
AHJ	AUTHORITY HAVING JURISDICTION
AIC	AMPERE INTERRUPTING CAPACITY
AWG	AMERICAN WIRE GAUGE
BFG	BELOW FINISHED GRADE
BLDG	BUILDING
BO	BID OPTION
BOS	BOTTOM OF STEEL
C	CONDUIT
CATV	CABLE TELEVISION
CB	CIRCUIT BREAKER
CCTV	CLOSED CIRCUIT TELEVISION
CT	CURRENT TRANSFORMER
CU	COPPER
DB	DIRECT BURIED
DISC	DISCONNECT
DN	DOWN
EMT	ELECTRICAL METALLIC TUBING
EWC	ELECTRIC WATER COOLER
EWH	ELECTRIC WATER HEATER
EQP	EQUIPMENT
EXIST	EXISTING
FAA	FIRE ALARM ANNUNCIATOR
FACP	FIRE ALARM CONTROL PANEL
FBO	FURNISHED BY OTHERS
FLR	FLOOR
FVNR	FULL VOLTAGE NON REVERSING
FWE	FURNISHED WITH EQUIPMENT
FU	FUSE
GEN	GENERATOR
GFCI	GROUND FAULT CIRCUIT INTERRUPT
CLG	CEILING
GND	GROUND
HP	HORSEPOWER
HTR	HEATER
IDC	INITIATING DEVICE CIRCUIT
IG	ISOLATED GROUND
IMC	INTERMEDIATE METAL CONDUIT
K	KILO
KA	KILO-AMP
KCMIL	THOUSAND CIRCULAR MILS
KV	KILOVOLT
KVA	KILOVOLT-AMPERE
KW	KILOWATT
KWH	KILOWATT-HOUR
LA	LIGHTNING ARRESTER
LTG	LIGHTING
MAX	MAXIMUM
MC	METAL CLAD
MCB	MAIN CIRCUIT BREAKER
MFR	MANUFACTURER
MLO	MAIN LUG ONLY
MTD	MOUNTED
MV	MEDIUM VOLTAGE
NAC	NOTIFICATION APPLIANCE CIRCUIT
NC	NORMALLY CLOSED
NEC	NATIONAL ELECTRIC CODE
NEG	NEGATIVE
NEUT	NEUTRAL
NIC	NOT IN CONTRACT
NO	NORMALLY OPEN
NTS	NOT TO SCALE
PH	PHASE
PV	PHOTOVOLTAIC
PVC	POLYVINYL CHLORIDE
RM	ROOM
RSC	RIGID STEEL CONDUIT
SWBD	SWITCHBOARD
TOS	TOP OF STEEL
TANSF	TRANSFORMER
V	VOLT
VA	VOLT-AMPERE
VFD	VARIABLE FREQUENCY DRIVE
WM	WATT METER
WP	WEATHER PROOF
XFMR	TRANSFORMER
XP	EXPLOSION PROOF

GENERAL NOTES

1. ALL GENERAL NOTES, SYMBOL LISTS AND DETAILS ARE TO BE CONSIDERED AS APPLICABLE TO ALL FIRE ALARM DRAWINGS FOR THIS PROJECT. SYMBOLS AND ABBREVIATIONS SHOWN ON THIS SHEET ARE FOR REFERENCE ONLY AND DO NOT INDICATE THEIR INCORPORATION IN THE DESIGN.
2. REFER TO SPECIFICATION SECTION 00 22 13.00 20 FOR A LIST OF BID OPTIONS FOR THIS PROJECT.
3. ALL WORK SHALL BE PERFORMED IN ACCORDANCE WITH UFC 3-600-10N FIRE PROTECTION ENGINEERING (FINAL DRAFT) AUGUST 2007, UFC 3-600-01 DESIGN FIRE PROTECTION ENGINEERING FOR FACILITIES 2013, NFPA-70, NATIONAL ELECTRICAL CODE (NEC) 2014, AND NFPA-72, NATIONAL FIRE ALARM AND SIGNALING CODE 2013.
4. SMOKE DETECTORS ARE NOT REQUIRED BY THE AHJ. PNSY HAS REQUESTED SMOKE DETECTORS IN CERTAIN SPECIFIC LOCATIONS, AND ACKNOWLEDGES THAT SPACING/COVERAGE WILL NOT MEET NFPA 72 REQUIREMENTS. SMOKE DETECTORS SHALL MEET ALL OTHER DESIGN AND INSTALLATION REQUIREMENTS OF NFPA 72.
5. A KING-FISHER INDUSTRIAL RADIO TRANSMITTER SHALL BE PROVIDED FOR RETRANSMISSION OF ALL SIGNALS TO THE FIRE STATION (BASE SUPERVISING STATION). THE FIRE STATION IS CONSTANTLY ATTENDED.
6. ALL FIRE ALARM CIRCUITS SHALL BE CLASS B AND INSTALLED IN CONDUIT.
7. PER PNSY INSTRUCTIONS, FIRE ALARM WIRING SHALL BE ROUTED INSIDE ENCLOSURES AND PASSAGEWAYS, EXCEPT FOR BETWEEN THE ACE AND RAE AND M-140 COMPLEX AND LOAD HOUSE, WHICH WILL HAVE OUTDOOR WIRING. REFER TO SITE AND RAE/RAE-SP FIRE ALARM DRAWINGS.
8. ALL NEW FIRE ALARM WIRING SHALL BE SOLID COPPER AND SIZED BY THE CONTRACTOR PER UFC 3-600-01. THE MINIMUM WIRE SIZE SHALL BE 16 GAUGE.
9. ALL CONDUCTOR TERMINATIONS MUST BE AT A TERMINAL STRIP. ALL DEVICES MUST HAVE SCREW TERMINALS.
10. PULL ALL CONDUCTORS SPLICE-FREE WHEREVER POSSIBLE. WHERE SPLICES ARE UNAVOIDABLE, PROVIDE INSULATED BARRIER TYPE TERMINAL STRIPS AT JUNCTION POINTS. THE USE OF WIRE NUTS, CRIMPED CONNECTORS, OR TWISTING OF CONDUCTORS IS PROHIBITED. RAE/RAE-SP DRAWINGS INDICATE AN APPROVED BOX MOUNT PLUG EXCEPTION THAT APPLIES TO THESE TWO ENCLOSURES ONLY.
11. UNLESS OTHERWISE INDICATED, FIRE ALARM PULL DEVICES SHALL BE MOUNTED 48-INCHES AFF, AND WALL-MOUNTED FIRE ALARM A/V NOTIFICATION APPLIANCES SHALL BE MOUNTED A MINIMUM OF 90-INCHES AFF AND/OR 6-INCHES BELOW A FINISHED CEILING.
12. ALL PENETRATIONS THROUGH FLOORS, RATED WALLS AND PARTITIONS SHALL BE SEALED WITH UL APPROVED FIRE SEALANT MATERIAL TO MAINTAIN THE RATING OF SEPARATION.
13. PROVIDE ALL MOUNTING HARDWARE NECESSARY FOR A COMPLETE INSTALLATION. MOUNT DEVICES AND ROUTE WIRING SO AS NOT TO INTERFERE WITH OPERATIONS SUCH AS DOOR SWINGS, MECHANICAL EQUIPMENT, ETC.
14. SMOKE DETECTORS MUST BE PHOTOELECTRIC WITH NO IONIZING SOURCE.
15. PROVIDE PROTECTED ENTRANCE CABINETS WITH SURGE PROTECTION PER NFPA 70 WHERE LOW VOLTAGE CABLES PENETRATE THE EXTERIOR WALLS OF ENCLOSURES.

SYM	DESCRIPTION	DATE	APPR
0	ISSUED FOR CONSTRUCTION	10/28/2016	CBC

NAVFAC

STATE OF MAINE — EMILY PINYARD No.12126 — LICENSED PROFESSIONAL ENGINEER — 10/28/16 — SEAL

Colby Company engineering — A/E INFO

APPROVED: David W. Thurnfield
FOR COMMANDER NAVFAC

ACTIVITY: TIM FISHER, C. 2370.6 BRANCH HEAD

SATISFACTORY TO | DATE 10/28/2016
DES ERP | DRW CSS | CHK WEP
PMDM: PETER STOCKLESS
BRANCH MANAGER: IAN BODWELL
FEA/DPM&E: AMIN BAHROUR
FIRE PROTECTION: PATRICK BAKAJ

DEPARTMENT OF THE NAVY
NAVAL FACILITIES ENGINEERING COMMAND
PUBLIC WORKS DEPARTMENT - MAINE
NAVAL FACILITIES ENGINEERING COMMAND ~ MID-ATLANTIC
NAVAL SHIPYARD - PORTSMOUTH, NH
PORTSMOUTH NAVAL SHIPYARD
KITTERY, ME
DRY DOCK #1 DEFUELING COMPLEX
M-140 COMPLEX
FIRE ALARM LEGEND, ABBREVIATIONS AND GENERAL NOTES

EPROJECT NO.: 1363311
CONSTR. CONTR. NO. N40085-17-C-5002
NAVFAC DRAWING NO. 12734912
SHEET 129 OF 188
FA-001 | DD1-16-993

DRAWFORM REVISION: 10 OCTOBER 2014

10/28/2016 6:49:08 AM X:\297 PORTSMOUTH NAVAL SHIPYARD\297.005.001 - DD#1 DEFUELING COMPLEX DESIGN\DRAWINGS\M140\SHEETS\FA-001.DWG

NOTES

1. SEE SHEET FA-001 FOR LEGEND, ABBREVIATIONS AND GENERAL NOTES.
2. KEYED TEST BOX LOCATIONS SHALL BE FIELD COORDINATED AND APPROVED BY PNSY PRIOR TO INSTALLATION.
3. THE M-140-3 AND M-140-4 GROUND LEVEL SHALL BE PROGRAMMED AS DISCONNECT ZONE DZ-7 AT THE FACP AND TRANSMISSION ZONE TZ-7. SEE SITE SHEET FA-101.
4. THE M-140-3 AND M-140-4 STAIR TOWER SHALL BE PROGRAMMED AS DISCONNECT ZONE DZ-8 AT THE FACP AND TRANSMISSION ZONE TZ-8. SEE SITE SHEET FA-101.

KEYED NOTES

1. PROVIDE BURIED CONDUIT AND SURGE PROTECTION BETWEEN M-140 COMPLEX AND LOAD HOUSE FOR FUTURE ROUTING OF FIRE ALARM CIRCUITS TO THE LOAD HOUSE. REFER TO FIRE ALARM SITE PLAN FA-101.
2. UL-LISTED KEYED TEST BOXES (KTB) FOR SMOKE DETECTORS IN THE M-140 COMPLEX. MOUNT ON WALL 48-INCHES ABOVE FINISHED FLOOR. INTERLOCK WITH SMOKE DETECTORS INDICATED ON FLOOR PLANS.
3. CONNECT TO KEYED TEST BOX KTB-1.
4. CONNECT TO KEYED TEST BOX KTB-2.
5. CONNECT TO KEYED TEST BOX KTB-3.

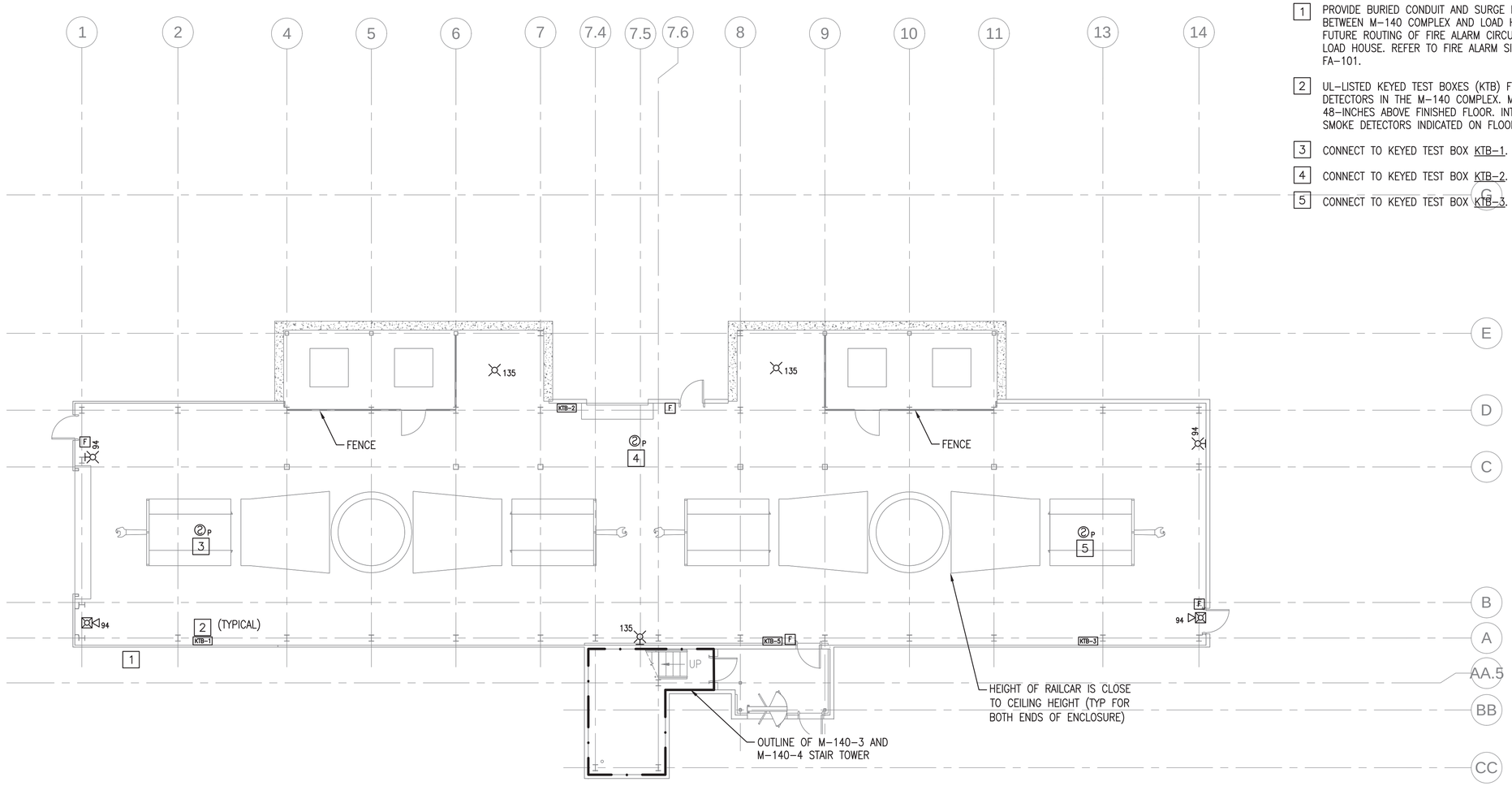

GROUND LEVEL FIRE ALARM PLAN (NO STORAGE ENCLOSURE)

SCALE: 1/8" = 1'-0"

PLAN NORTH

0 4' 8' 16'
Scale: 1/8" = 1'-0"

SYM	DESCRIPTION	DATE	APPR
0	ISSUED FOR CONSTRUCTION	10/28/2016	CBC

NAVFAC

STATE OF MAINE
EMILY PINYARD
No. 12126
LICENSED PROFESSIONAL ENGINEER
10/28/16
SEAL

Colby Company engineering
A/E INFO

APPROVED
David W. Thurnfeld
FOR COMMANDER NAVFAC

ACTIVITY
TIM FISHER
C. 2370.6 BRANCH HEAD

SATISFACTORY TO DATE 10/28/2016
DES EAF DRW CSS CHK AHS
PMDM PETER STOCKLESS
BRANCH MANAGER IAN BODWELL
FEAD/PM&E AMIN BAHROUR
FIRE PROTECTION PATRICK BAKAJ

DEPARTMENT OF THE NAVY
NAVAL FACILITIES ENGINEERING COMMAND
PUBLIC WORKS DEPARTMENT - MAINE
NAVAL FACILITIES ENGINEERING COMMAND ~ MID-ATLANTIC
NAVAL SHIPYARD - PORTSMOUTH, NH
PORTSMOUTH NAVAL SHIPYARD
KITTERY, ME
DRY DOCK #1 DEFUELING COMPLEX
M-140 COMPLEX
GROUND LEVEL FIRE ALARM PLAN (NO STORAGE ENCLOSURE)

EPROJECT NO.: 1363311
CONSTR. CONTR. NO. N40085-17-C-5002
NAVFAC DRAWING NO. 12734913
SHEET 130 OF 188
FA-100 DD1-16-994

DRAWFORM REVISION: 10 OCTOBER 2014

10/28/2016 6:49:12 AM X:\297 PORTSMOUTH NAVAL SHIPYARD\297.005.001 - DD#1 DEFUELING COMPLEX DESIGN\DRAWINGS\M140\SHEETS\FA-100.DWG

NOTES

1. SEE SHEET FA-001 FOR LEGEND, ABBREVIATIONS AND GENERAL NOTES.
2. KEYED TEST BOX LOCATIONS SHALL BE FIELD COORDINATED AND APPROVED BY PNSY PRIOR TO INSTALLATION.
3. THE M-140-3 AND M-140-4 GROUND LEVEL SHALL BE PROGRAMMED AS DISCONNECT ZONE DZ-7 AT THE FACP AND TRANSMISSION ZONE TZ-7. SEE SITE SHEET FA-101.
4. THE M-140-3 AND M-140-4 STAIR TOWER SHALL BE PROGRAMMED AS DISCONNECT ZONE DZ-8 AT THE FACP AND TRANSMISSION ZONE TZ-8. SEE SITE SHEET FA-101.

KEYED NOTES

1. PROVIDE BURIED CONDUIT BETWEEN M-140 COMPLEX AND LOAD HOUSE AND SURGE PROTECTION FOR FUTURE ROUTING OF FIRE ALARM CIRCUITS TO THE LOAD HOUSE. REFER TO FIRE ALARM SITE PLAN FA-101.
2. UL-LISTED KEYED TEST BOXES (KTB) FOR SMOKE DETECTORS IN THE M-140 COMPLEX. MOUNT ON WALL 48-INCHES ABOVE FINISHED FLOOR. INTERLOCK WITH SMOKE DETECTORS INDICATED ON FLOOR PLANS.
3. CONNECT TO KEYED TEST BOX KTB-1.
4. CONNECT TO KEYED TEST BOX KTB-2.
5. CONNECT TO KEYED TEST BOX KTB-3.

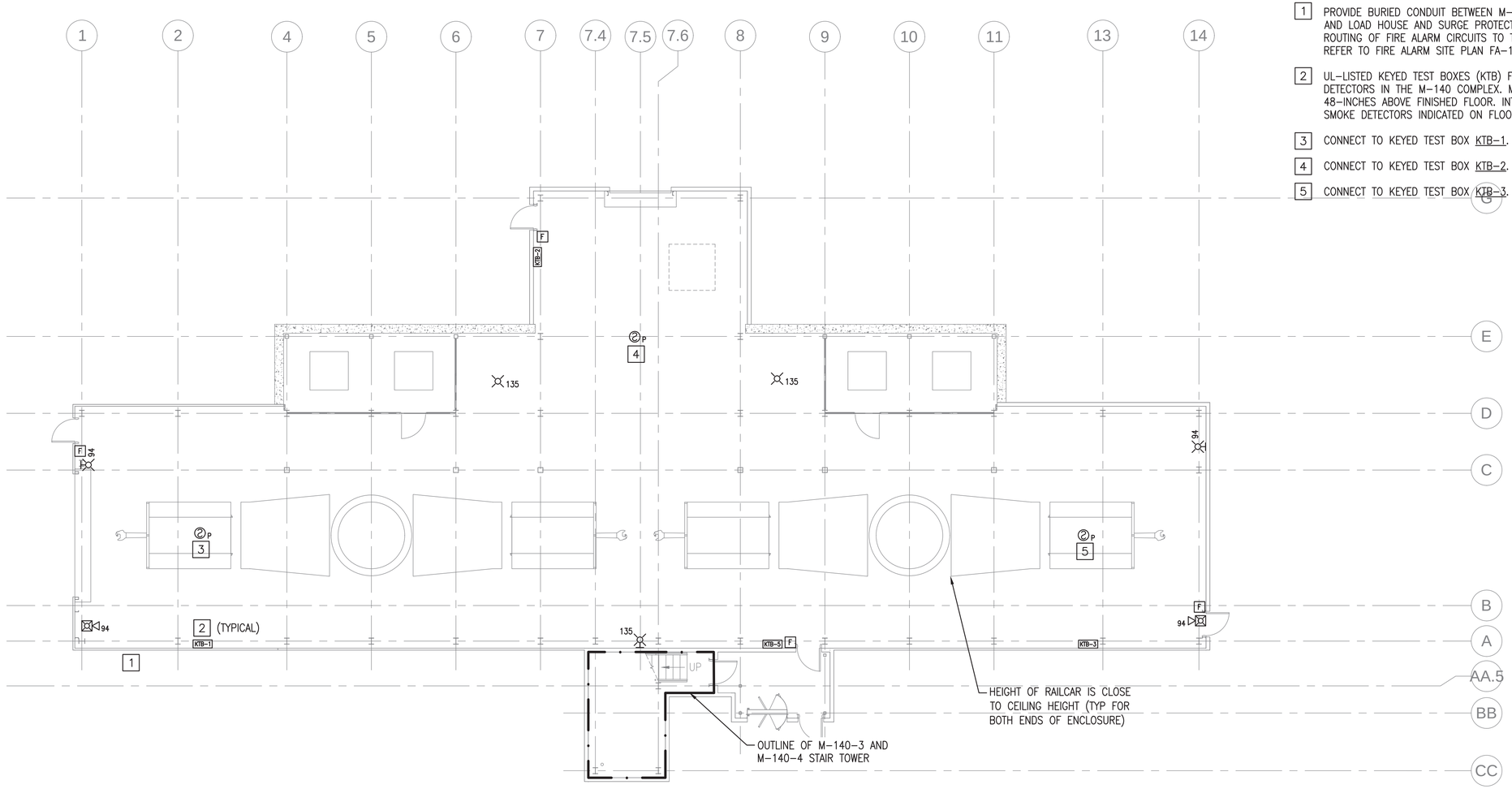

GROUND LEVEL FIRE ALARM PLAN

SCALE: 1/8" = 1'-0"

PLAN NORTH

0 4' 8' 16'
Scale: 1/8" = 1'-0"

SYM	DESCRIPTION	DATE	APPR
0	ISSUED FOR CONSTRUCTION	10/28/2016	CBC

NAVFAC

STATE OF MAINE
EMILY PINYARD
No. 12126
LICENSED PROFESSIONAL ENGINEER
10/28/16
SEAL

Colby Company engineering
A/E INFO

APPROVED
David W. Thurnfeld
FOR COMMANDER NAVFAC

ACTIVITY
TIM FISHER
C. 2370.6 BRANCH HEAD

SATISFACTORY TO DATE 10/28/2016
DES ERP DRW CSS CHK WEP
PMDM PETER STOCKLESS
BRANCH MANAGER IAN BODWELL
FEAD/PM&E AMIN BAHROUR
FIRE PROTECTION PATRICK BAKAJ

DEPARTMENT OF THE NAVY
NAVAL FACILITIES ENGINEERING COMMAND
PUBLIC WORKS DEPARTMENT - MAINE
NAVAL FACILITIES ENGINEERING COMMAND ~ MID-ATLANTIC
NAVAL SHIPYARD - PORTSMOUTH, NH
PORTSMOUTH NAVAL SHIPYARD
KITTERY, ME
DRY DOCK #1 DEFUELING COMPLEX
M-140 COMPLEX
GROUND LEVEL FIRE ALARM PLAN

EPROJECT NO.: 1363311
CONSTR. CONTR. NO. N40085-17-C-5002
NAVFAC DRAWING NO. 12734914
SHEET 131 OF 188
FA-100A DD1-16-995

DRAWFORM REVISION: 10 OCTOBER 2014

10/28/2016 6:49:17 AM X:\297 PORTSMOUTH NAVAL SHIPYARD\297.005.001 - DD#1 DEFUELING COMPLEX DESIGN\DRAWINGS\M140\SHEETS\FA-100A.DWG

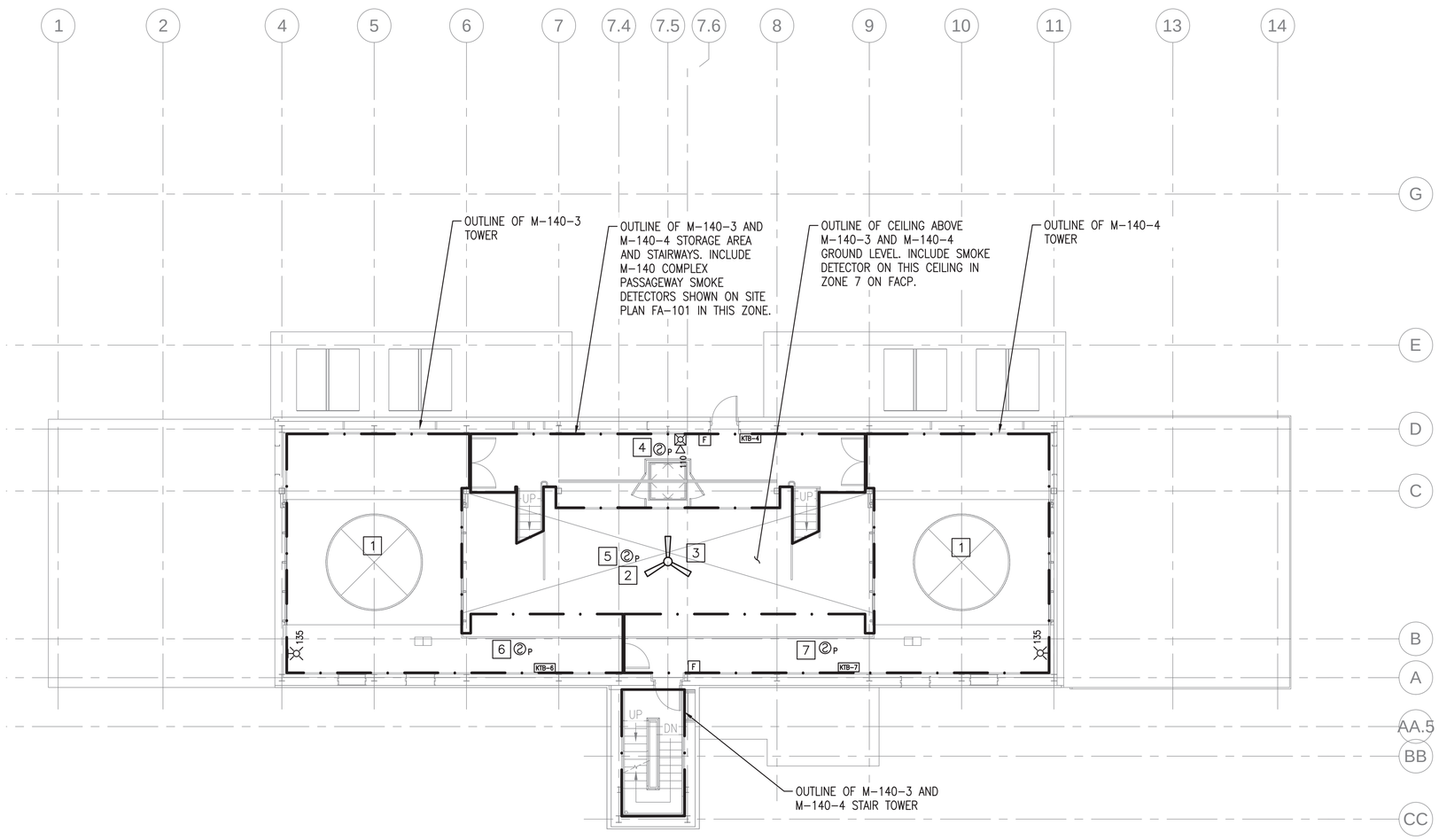

LEVEL 1 FIRE ALARM PLAN (NO STORAGE ENCLOSURE)

SCALE: 1/8" = 1'-0"

PLAN NORTH

NOTES

1. SEE SHEET FA-001 FOR LEGEND, ABBREVIATIONS AND GENERAL NOTES.
2. KEYED TEST BOX LOCATIONS SHALL BE FIELD COORDINATED AND APPROVED BY PNSY PRIOR TO INSTALLATION.
3. THE M-140-3 TOWER SHALL BE PROGRAMMED AS DISCONNECT ZONE DZ-8 AT THE FACP AND TRANSMISSION ZONE TZ-8. SEE SITE SHEET FA-101.
4. THE M-140-4 TOWER SHALL BE PROGRAMMED AS DISCONNECT ZONE DZ-9 AT THE FACP AND TRANSMISSION ZONE TZ-9. SEE SITE SHEET FA-101.
5. THE M-140-3 AND M-140-4 STORAGE ENCLOSURE, INTERIOR STAIRWAYS, AND PASSAGEWAY SHALL BE PROGRAMMED AS DISCONNECT ZONE DZ-10 AT THE FACP AND TRANSMISSION ZONE TZ-10. SEE SITE SHEET FA-101.
6. THE M-140-3 AND M-140-4 STAIR TOWER SHALL BE PROGRAMMED AS DISCONNECT ZONE DZ-11 AT THE FACP AND TRANSMISSION ZONE TZ-11. SEE SITE SHEET FA-101.
7. MINIMIZE THE PRESENCE OF SURFACE-MOUNTED DEVICES AND CONDUIT.
   - 7.1. SUBMIT SHOP DRAWINGS WITH ELEVATION VIEWS OF ALL SURFACE-MOUNTED DEVICES AND WIRING IN THESE AREAS TO PNSY FOR APPROVAL

KEYED NOTES

1. THERE IS NO CEILING AT THIS OUTLINED LOCATION.
2. SMOKE DETECTOR IS ADJACENT TO CEILING FAN AND NEEDS TO BE RATED FOR AIR SPEEDS OF AT LEAST 10 MPH. INSTALL DETECTOR AT LEAST 36" FROM TIP OF FAN BLADES.
3. THE FIRE ALARM SYSTEM SHALL DE-ENERGIZE CEILING FAN IN THE EVENT OF AN ALARM GENERATED IN THE M-140 COMPLEX. CEILING FAN AND RELAY ARE PROVIDED BY MECHANICAL – COORDINATE WITH MECHANICAL CONTRACTOR ON INSTALLED LOCATION. WIRING AND CONNECTION TO FACP BY FIRE ALARM CONTRACTOR.
4. CONNECT TO KEYED TEST BOX KTB-4.
5. CONNECT TO KEYED TEST BOX KTB-5 AT GROUND LEVEL. SEE SHEET FA-100.
6. CONNECT TO KEYED TEST BOX KTB-6.
7. CONNECT TO KEYED TEST BOX KTB-7.

Scale: 1/8" = 1'-0"

SYM	DESCRIPTION	DATE	APPR
0	ISSUED FOR CONSTRUCTION	10/28/2016	CBC

NAVFAC

STATE OF MAINE EMILY PINYARD No. 12126 LICENSED PROFESSIONAL ENGINEER 10/28/16 SEAL

Colby Company engineering A/E INFO

APPROVED BY SIGNATURE: David W. Drumfield
FOR COMMANDER NAVFAC
ACTIVITY: TIM FISHER, C. 2370.6 BRANCH HEAD
SATISFACTORY TO DATE: 10/28/2016

DES	EAF	DRW	CSS	CHK	AHS

PM/DM: PETER STOCKLESS
BRANCH MANAGER: IAN BODWELL
FEA/DPM/AE: AMIN BAHROUR
FIRE PROTECTION: PATRICK BAKAJ

DEPARTMENT OF THE NAVY
NAVAL FACILITIES ENGINEERING COMMAND
PUBLIC WORKS DEPARTMENT - MAINE
NAVAL FACILITIES ENGINEERING COMMAND – MID-ATLANTIC
NAVAL SHIPYARD - PORTSMOUTH, NH
PORTSMOUTH NAVAL SHIPYARD
KITTERY, ME
DRY DOCK #1 DEFUELING COMPLEX
M-140 COMPLEX
LEVEL 1 FIRE ALARM PLAN (NO STORAGE ENCLOSURE)

EPROJECT NO.: 1363311
CONSTR. CONTR. NO.: N40085-17-C-5002
NAVFAC DRAWING NO.: 12734915
SHEET 132 OF 188

FA-101 | DD1-16-996

DRAWFORM REVISION: 10 OCTOBER 2014

10/28/2016 6:49:22 AM X:\297 PORTSMOUTH NAVAL SHIPYARD\297.005.001 - DD#1 DEFUELING COMPLEX DESIGN\DRAWINGS\M140\SHEETS\FA-101.DWG

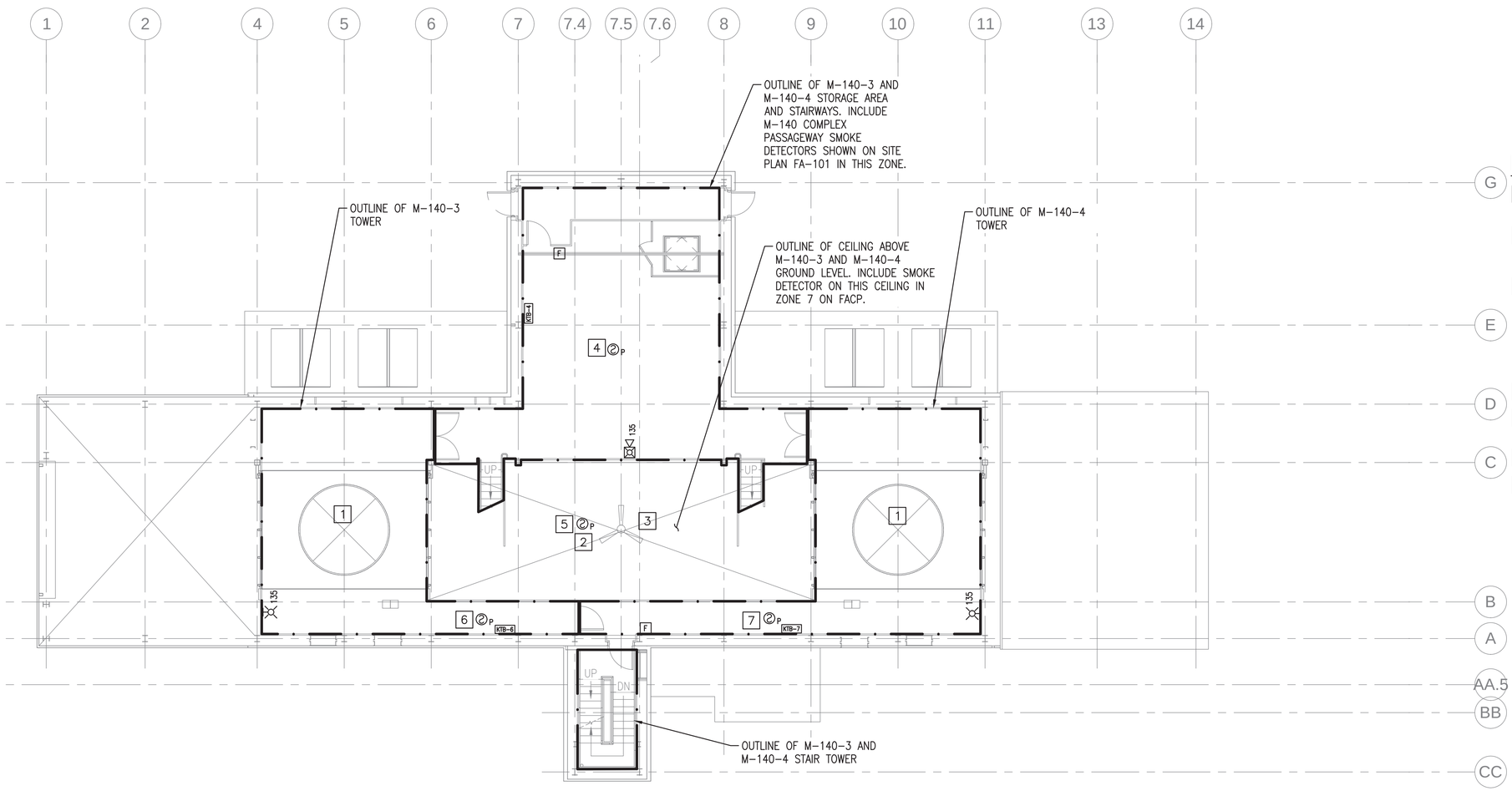

LEVEL 1 FIRE ALARM PLAN

SCALE: 1/8" = 1'-0"

PLAN NORTH

NOTES

1. SEE SHEET FA-001 FOR LEGEND, ABBREVIATIONS AND GENERAL NOTES.
2. KEYED TEST BOX LOCATIONS SHALL BE FIELD COORDINATED AND APPROVED BY PNSY PRIOR TO INSTALLATION.
3. THE M-140-3 TOWER SHALL BE PROGRAMMED AS DISCONNECT ZONE DZ-8 AT THE FACP AND TRANSMISSION ZONE TZ-8. SEE SITE SHEET FA-101.
4. THE M-140-4 TOWER SHALL BE PROGRAMMED AS DISCONNECT ZONE DZ-9 AT THE FACP AND TRANSMISSION ZONE TZ-9. SEE SITE SHEET FA-101.
5. THE M-140-3 AND M-140-4 STORAGE ENCLOSURE, INTERIOR STAIRWAYS, AND PASSAGEWAY SHALL BE PROGRAMMED AS DISCONNECT ZONE DZ-10 AT THE FACP AND TRANSMISSION ZONE TZ-10. SEE SITE SHEET FA-101.
6. THE M-140-3 AND M-140-4 STAIR TOWER SHALL BE PROGRAMMED AS DISCONNECT ZONE DZ-11 AT THE FACP AND TRANSMISSION ZONE TZ-11. SEE SITE SHEET FA-101.
7. MINIMIZE THE PRESENCE OF SURFACE-MOUNTED DEVICES AND CONDUIT.
   - 7.1. SUBMIT SHOP DRAWINGS WITH ELEVATION VIEWS OF ALL SURFACE-MOUNTED DEVICES AND WIRING IN THESE AREAS TO PNSY FOR APPROVAL

KEYED NOTES

1. THERE IS NO CEILING AT THIS OUTLINED LOCATION.
2. SMOKE DETECTOR IS ADJACENT TO CEILING FAN AND NEEDS TO BE RATED FOR AIR SPEEDS OF AT LEAST 10 MPH. INSTALL DETECTOR AT LEAST 36" FROM TIP OF FAN BLADES.
3. THE FIRE ALARM SYSTEM SHALL DE-ENERGIZE CEILING FAN IN THE EVENT OF AN ALARM GENERATED IN THE M-140 COMPLEX. CEILING FAN AND RELAY ARE PROVIDED BY MECHANICAL – COORDINATE WITH MECHANICAL CONTRACTOR ON INSTALLED LOCATION. WIRING AND CONNECTION TO FACP BY FIRE ALARM CONTRACTOR.
4. CONNECT TO KEYED TEST BOX KTB-4.
5. CONNECT TO KEYED TEST BOX KTB-5 AT GROUND LEVEL. SEE SHEET FA-100A.
6. CONNECT TO KEYED TEST BOX KTB-6.
7. CONNECT TO KEYED TEST BOX KTB-7.

Scale: 1/8" = 1'-0"

SYM	DESCRIPTION	DATE	APPR
0	ISSUED FOR CONSTRUCTION	10/28/2016	CBC

NAVFAC

STATE OF MAINE
EMILY PINYARD
No. 12126
LICENSED PROFESSIONAL ENGINEER
10/28/16
SEAL

Colby Company engineering
A/E INFO

APPROVED
David W. Trumfield
FOR COMMANDER NAVFAC

ACTIVITY
TIM FISHER
C. 2370.6 BRANCH HEAD

SATISFACTORY TO DATE 10/28/2016
DES ERP DRW CSS CHK WEP
PMDM PETER STOCKLESS
BRANCH MANAGER IAN BODWELL
FEAD/PM&E AMIN BAHROUR
FIRE PROTECTION PATRICK BAKAJ

DEPARTMENT OF THE NAVY
NAVAL FACILITIES ENGINEERING COMMAND
PUBLIC WORKS DEPARTMENT - MAINE
NAVAL FACILITIES ENGINEERING COMMAND ~ MID-ATLANTIC
NAVAL SHIPYARD - PORTSMOUTH, NH
PORTSMOUTH NAVAL SHIPYARD
KITTERY, ME
DRY DOCK #1 DEFUELING COMPLEX
M-140 COMPLEX
LEVEL 1 FIRE ALARM PLAN

EPROJECT NO.: 1363311
CONSTR. CONTR. NO. N40085-17-C-5002
NAVFAC DRAWING NO. 12734916
SHEET 133 OF 188
FA-101A DD1-16-997

DRAWFORM REVISION: 10 OCTOBER 2014

10/28/2016 6:49:26 AM X:\297 PORTSMOUTH NAVAL SHIPYARD\297.005.001 - DD#1 DEFUELING COMPLEX DESIGN\DRAWINGS\M140\SHEETS\FA-101A.DWG

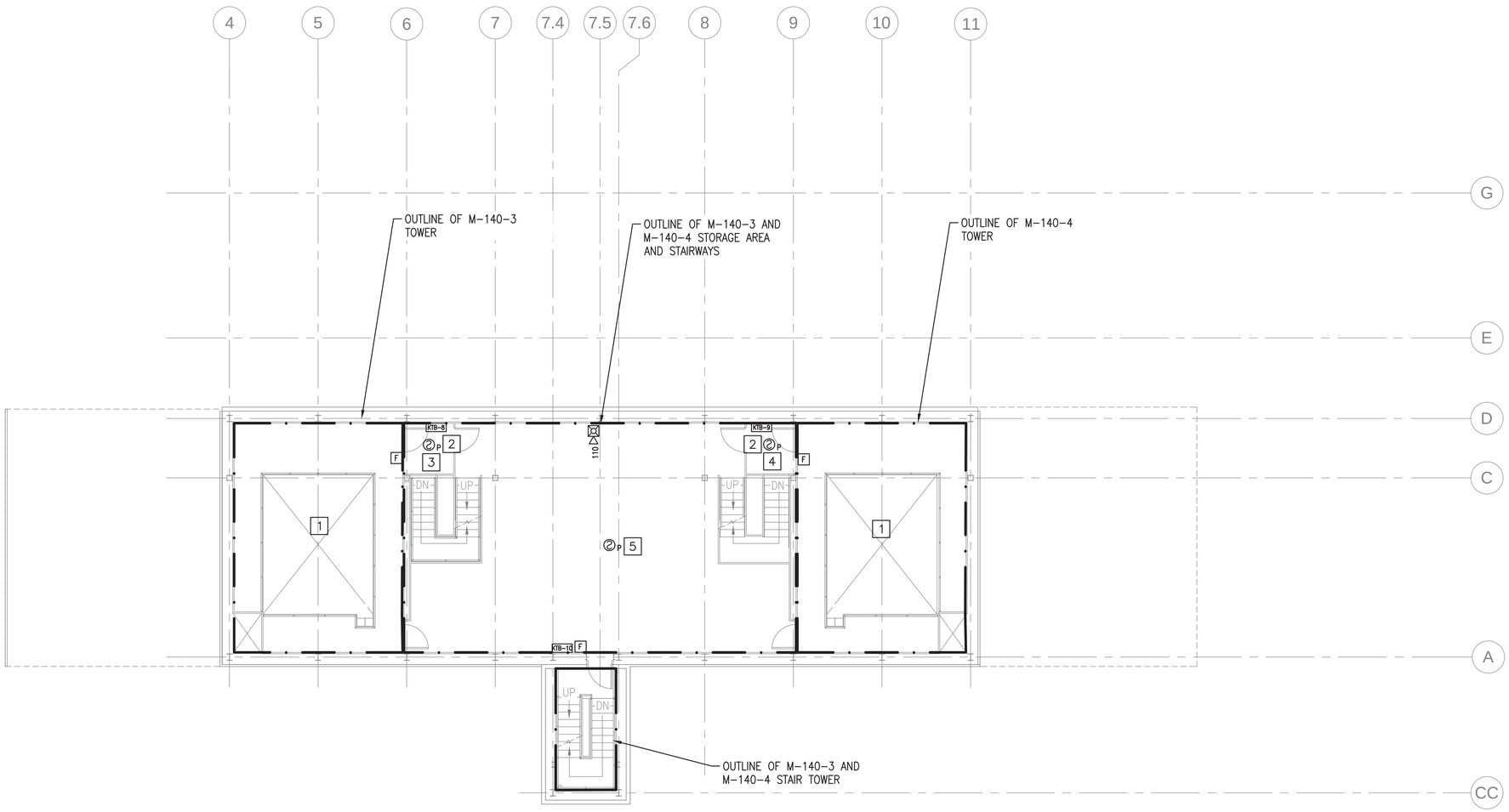

LEVEL 2 FIRE ALARM PLAN (NO STORAGE ENCLOSURE)

SCALE: 1/8" = 1'-0"

PLAN NORTH

NOTES

1. SEE SHEET FA-001 FOR LEGEND, ABBREVIATIONS AND GENERAL NOTES.
2. KEYED TEST BOX LOCATIONS SHALL BE FIELD COORDINATED AND APPROVED BY PNSY PRIOR TO INSTALLATION.
3. THE M-140-3 TOWER SHALL BE PROGRAMMED AS DISCONNECT ZONE DZ-8 AT THE FACP AND TRANSMISSION ZONE TZ-8. SEE SITE SHEET FA-101.
4. THE M-140-4 TOWER SHALL BE PROGRAMMED AS DISCONNECT ZONE DZ-9 AT THE FACP AND TRANSMISSION ZONE TZ-9. SEE SITE SHEET FA-101.
5. THE M-140-3 AND M-140-4 STORAGE ENCLOSURE, INTERIOR STAIRWAYS, AND PASSAGEWAY SHALL BE PROGRAMMED AS DISCONNECT ZONE DZ-10 AT THE FACP AND TRANSMISSION ZONE TZ-10. SEE SITE SHEET FA-101.
6. THE M-140-3 AND M-140-4 STAIR TOWER SHALL BE PROGRAMMED AS DISCONNECT ZONE DZ-11 AT THE FACP AND TRANSMISSION ZONE TZ-11. SEE SITE SHEET FA-101.

KEYED NOTES

1. THERE IS NO FLOOR OR CEILING AT THIS OUTLINED LOCATION.
2. SMOKE DETECTOR AT TOP OF ENCLOSED PORTION OF INTERIOR STAIR BETWEEN LEVELS 1 AND 2.
3. CONNECT TO KEYED TEST BOX KTB-8.
4. CONNECT TO KEYED TEST BOX KTB-9.
5. CONNECT TO KEYED TEST BOX KTB-10.

SYM	DESCRIPTION	DATE	APPR
0	ISSUED FOR CONSTRUCTION	10/28/2016	CBC

NAVFAC

STATE OF MAINE
EMILY PINYARD
No. 12126
LICENSED PROFESSIONAL ENGINEER
10/28/16
SEAL

Colby Company engineering
A/E INFO

APPROVED
David W. Thurnfield
FOR COMMANDER NAVFAC

ACTIVITY
TIM FISHER
C. 2370.6 BRANCH HEAD

SATISFACTORY TO DATE 10/28/2016
DES EAF DRW CSS CHK AHS
PMDM PETER STOCKLESS
BRANCH MANAGER IAN BODWELL
FEAD/PM&E AMIN BAHROUR
FIRE PROTECTION PATRICK BAKAJ

DEPARTMENT OF THE NAVY
NAVAL FACILITIES ENGINEERING COMMAND
PUBLIC WORKS DEPARTMENT - MAINE
NAVAL FACILITIES ENGINEERING COMMAND ~ MID-ATLANTIC
NAVAL SHIPYARD - PORTSMOUTH, NH
PORTSMOUTH NAVAL SHIPYARD
KITTERY, ME
DRY DOCK #1 DEFUELING COMPLEX
M-140 COMPLEX
LEVEL 2 FIRE ALARM PLAN (NO STORAGE ENCLOSURE)

EPROJECT NO.: 1363311
CONSTR. CONTR. NO. N40085-17-C-5002
NAVFAC DRAWING NO. 12734917
SHEET 134 OF 188
FA-102 DD1-16-998

Scale: 1/8" = 1'-0"

DRAWFORM REVISION: 10 OCTOBER 2014

10/28/2016 6:49:30 AM X:\297 PORTSMOUTH NAVAL SHIPYARD\297.005.001 - DD#1 DEFUELING COMPLEX DESIGN\DRAWINGS\M140\SHEETS\FA-102.DWG

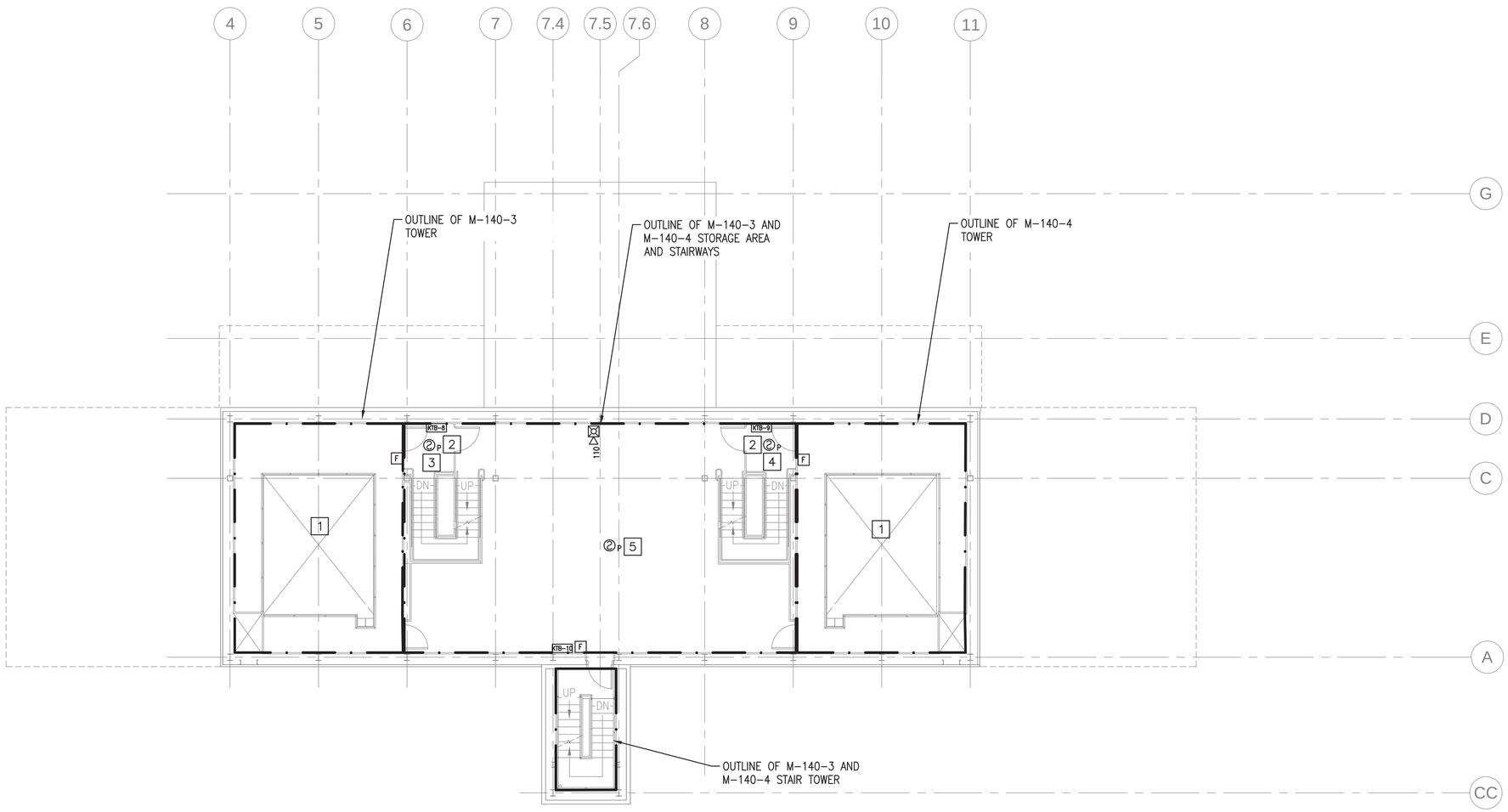

LEVEL 2 FIRE ALARM PLAN

SCALE: 1/8" = 1'-0"

PLAN NORTH

NOTES

1. SEE SHEET FA-001 FOR LEGEND, ABBREVIATIONS AND GENERAL NOTES.
2. KEYED TEST BOX LOCATIONS SHALL BE FIELD COORDINATED AND APPROVED BY PNSY PRIOR TO INSTALLATION.
3. THE M-140-3 TOWER SHALL BE PROGRAMMED AS DISCONNECT ZONE DZ-8 AT THE FACP AND TRANSMISSION ZONE TZ-8. SEE SITE SHEET FA-101.
4. THE M-140-4 TOWER SHALL BE PROGRAMMED AS DISCONNECT ZONE DZ-9 AT THE FACP AND TRANSMISSION ZONE TZ-9. SEE SITE SHEET FA-101.
5. THE M-140-3 AND M-140-4 STORAGE ENCLOSURE, INTERIOR STAIRWAYS, AND PASSAGEWAY SHALL BE PROGRAMMED AS DISCONNECT ZONE DZ-10 AT THE FACP AND TRANSMISSION ZONE TZ-10. SEE SITE SHEET FA-101.
6. THE M-140-3 AND M-140-4 STAIR TOWER SHALL BE PROGRAMMED AS DISCONNECT ZONE DZ-11 AT THE FACP AND TRANSMISSION ZONE TZ-11. SEE SITE SHEET FA-101.

KEYED NOTES

1. THERE IS NO FLOOR OR CEILING AT THIS OUTLINED LOCATION.
2. SMOKE DETECTOR AT TOP OF ENCLOSED PORTION OF INTERIOR STAIR BETWEEN LEVELS 1 AND 2.
3. CONNECT TO KEYED TEST BOX KTB-8.
4. CONNECT TO KEYED TEST BOX KTB-9.
5. CONNECT TO KEYED TEST BOX KTB-10.

SYM	DESCRIPTION	DATE	APPR
0	ISSUED FOR CONSTRUCTION	10/28/2016	CBC

NAVFAC

STATE OF MAINE
EMILY PINYARD
No. 12126
LICENSED PROFESSIONAL ENGINEER
10/28/16
SEAL

Colby Company engineering
A/E INFO

APPROVED
David W. Thurnfield
FOR COMMANDER NAVFAC

ACTIVITY
TIM FISHER
C. 2370.6 BRANCH HEAD

SATISFACTORY TO DATE 10/28/2016
DES ERP DRW CSS CHK WEP
PMDM PETER STOCKLESS
BRANCH MANAGER IAN BODWELL
FEA/DPM&E AMIN BAHROUR
FIRE PROTECTION PATRICK BAKAJ

DEPARTMENT OF THE NAVY
NAVAL FACILITIES ENGINEERING COMMAND
PUBLIC WORKS DEPARTMENT - MAINE
NAVAL FACILITIES ENGINEERING COMMAND ~ MID-ATLANTIC
NAVAL SHIPYARD - PORTSMOUTH, NH
PORTSMOUTH NAVAL SHIPYARD
KITTERY, ME
DRY DOCK #1 DEFUELING COMPLEX
M-140 COMPLEX
LEVEL 2 FIRE ALARM PLAN

EPROJECT NO.: 1363311
CONSTR. CONTR. NO. N40085-17-C-5002
NAVFAC DRAWING NO. 12734918
SHEET 135 OF 188

FA-102A DD1-16-999

0 4' 8' 16'
Scale: 1/8" = 1'-0"

DRAWFORM REVISION: 10 OCTOBER 2014

10/28/2016 6:49:34 AM X:\297 PORTSMOUTH NAVAL SHIPYARD\297.005.001 - DD#1 DEFUELING COMPLEX DESIGN\DRAWINGS\M140\SHEETS\FA-102A.DWG

NOTES

1. SEE SHEET FA-001 FOR LEGEND, ABBREVIATIONS AND GENERAL NOTES.
2. KEYED TEST BOX LOCATIONS SHALL BE FIELD COORDINATED AND APPROVED BY PNSY PRIOR TO INSTALLATION.
3. THE M-140-3 TOWER SHALL BE PROGRAMMED AS DISCONNECT ZONE DZ-8 AT THE FACP AND TRANSMISSION ZONE TZ-8. SEE SITE SHEET FA-101.
4. THE M-140-4 TOWER SHALL BE PROGRAMMED AS DISCONNECT ZONE DZ-9 AT THE FACP AND TRANSMISSION ZONE TZ-9. SEE SITE SHEET FA-101.
5. THE M-140-3 AND M-140-4 STORAGE ENCLOSURE, INTERIOR STAIRWAYS, AND PASSAGEWAY SHALL BE PROGRAMMED AS DISCONNECT ZONE DZ-10 AT THE FACP AND TRANSMISSION ZONE TZ-10. SEE SITE SHEET FA-101.
6. THE M-140-3 AND M-140-4 EXIT STAIR TOWER SHALL BE PROGRAMMED AS DISCONNECT ZONE DZ-11 AT THE FACP AND TRANSMISSION ZONE TZ-10. SEE SITE SHEET FA-101.

KEYED NOTES

1. THERE IS NO FLOOR OR CEILING AT THIS OUTLINED LOCATION.
2. SMOKE DETECTOR AT CEILING OF INTERIOR STAIRWELL BETWEEN LEVELS 2 AND 3.
3. CONNECT TO KEYED TEST BOX KTB-11.
4. CONNECT TO KEYED TEST BOX KTB-12.
5. CONNECT TO KEYED TEST BOX KTB-13.
6. KEYED TEST BOXES FOR CRANE LEVEL SMOKE DETECTORS. SEE FA-105.

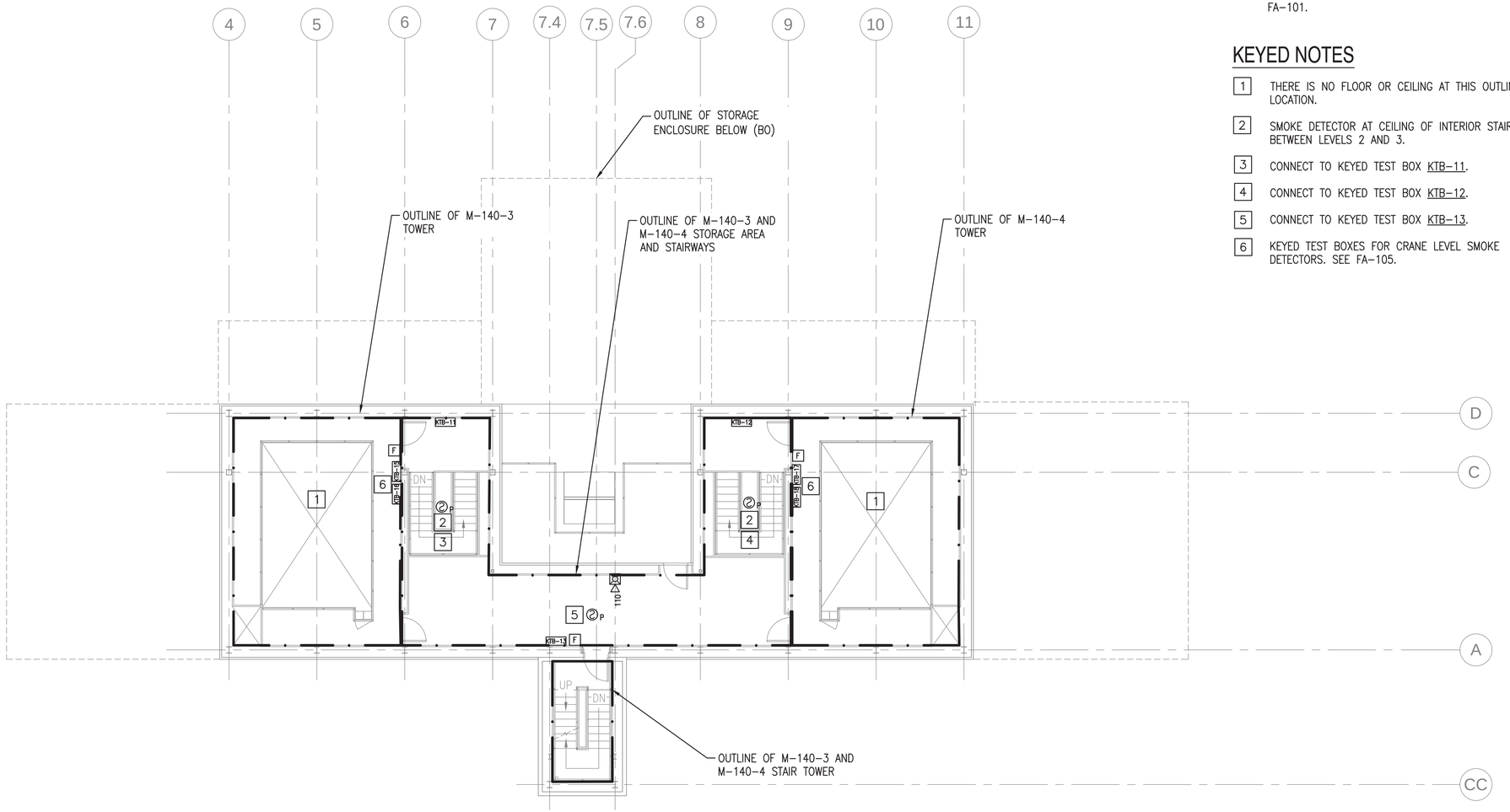

LEVEL 3 FIRE ALARM PLAN

SCALE: 1/8" = 1'-0"

PLAN NORTH

0 4' 8' 16'
Scale: 1/8" = 1'-0"

SYM	DESCRIPTION	DATE	APPR
0	ISSUED FOR CONSTRUCTION	10/28/2016	CBC

NAVFAC

STATE OF MAINE
EMILY PINYARD
No. 12126
LICENSED
PROFESSIONAL ENGINEER
10/28/16
SEAL

Colby Company engineering
A/E INFO

APPROVED
Baird W. Grunfeld
FOR COMMANDER NAVFAC

ACTIVITY:
TIM FISHER
C. 2370.6 BRANCH HEAD

SATISFACTORY TO DATE 10/28/2016

DES ERP | DRW CSS | CHK WEP

PMDM PETER STOCKLESS
BRANCH MANAGER IAN BODWELL
FEAD/PM&E AMIN BAHROUR
FIRE PROTECTION PATRICK BAKAJ

DEPARTMENT OF THE NAVY
NAVAL FACILITIES ENGINEERING COMMAND
PUBLIC WORKS DEPARTMENT - MAINE

NAVAL FACILITIES ENGINEERING COMMAND ~ MID-ATLANTIC
NAVAL SHIPYARD - PORTSMOUTH, NH

PORTSMOUTH NAVAL SHIPYARD
KITTERY, ME
DRY DOCK #1 DEFUELING COMPLEX
M-140 COMPLEX
LEVEL 3 FIRE ALARM PLAN

EPROJECT NO.: 1363311

CONSTR. CONTR. NO.
N40085-17-C-5002

NAVFAC DRAWING NO.
12734919

SHEET 136 OF 188

FA-103 | DD1-16-1000

DRAWFORM REVISION: 10 OCTOBER 2014

10/28/2016 6:49:38 AM X:\297 PORTSMOUTH NAVAL SHIPYARD\297.005.001 - DD#1 DEFUELING COMPLEX DESIGN\DRAWINGS\M140\SHEETS\FA-103.DWG

NOTES

1. SEE SHEET FA–001 FOR LEGEND, ABBREVIATIONS AND GENERAL NOTES.
2. KEYED TEST BOX LOCATIONS SHALL BE FIELD COORDINATED AND APPROVED BY PNSY PRIOR TO INSTALLATION.
3. THE M–140–3 TOWER SHALL BE PROGRAMMED AS DISCONNECT ZONE DZ–8 AT THE FACP AND TRANSMISSION ZONE TZ–8. SEE SITE SHEET FA–101.
4. THE M–140–4 TOWER SHALL BE PROGRAMMED AS DISCONNECT ZONE DZ–9 AT THE FACP AND TRANSMISSION ZONE TZ–9 SEE SITE SHEET FA–101.
5. THE M–140–3 AND M–140–4 STAIR TOWER SHALL BE PROGRAMMED AS DISCONNECT ZONE DZ–11 AT THE FACP AND TRANSMISSION ZONE TZ–11. SEE SITE SHEET FA–101. DEVICES IN THIS ZONE SHALL BE CONVENTIONAL (NON–ADDRESSABLE).

KEYED NOTES

1 SMOKE DETECTOR AT STAIRWELL CEILING.

2 CONNECT TO KEYED TEST BOX KTB–14.

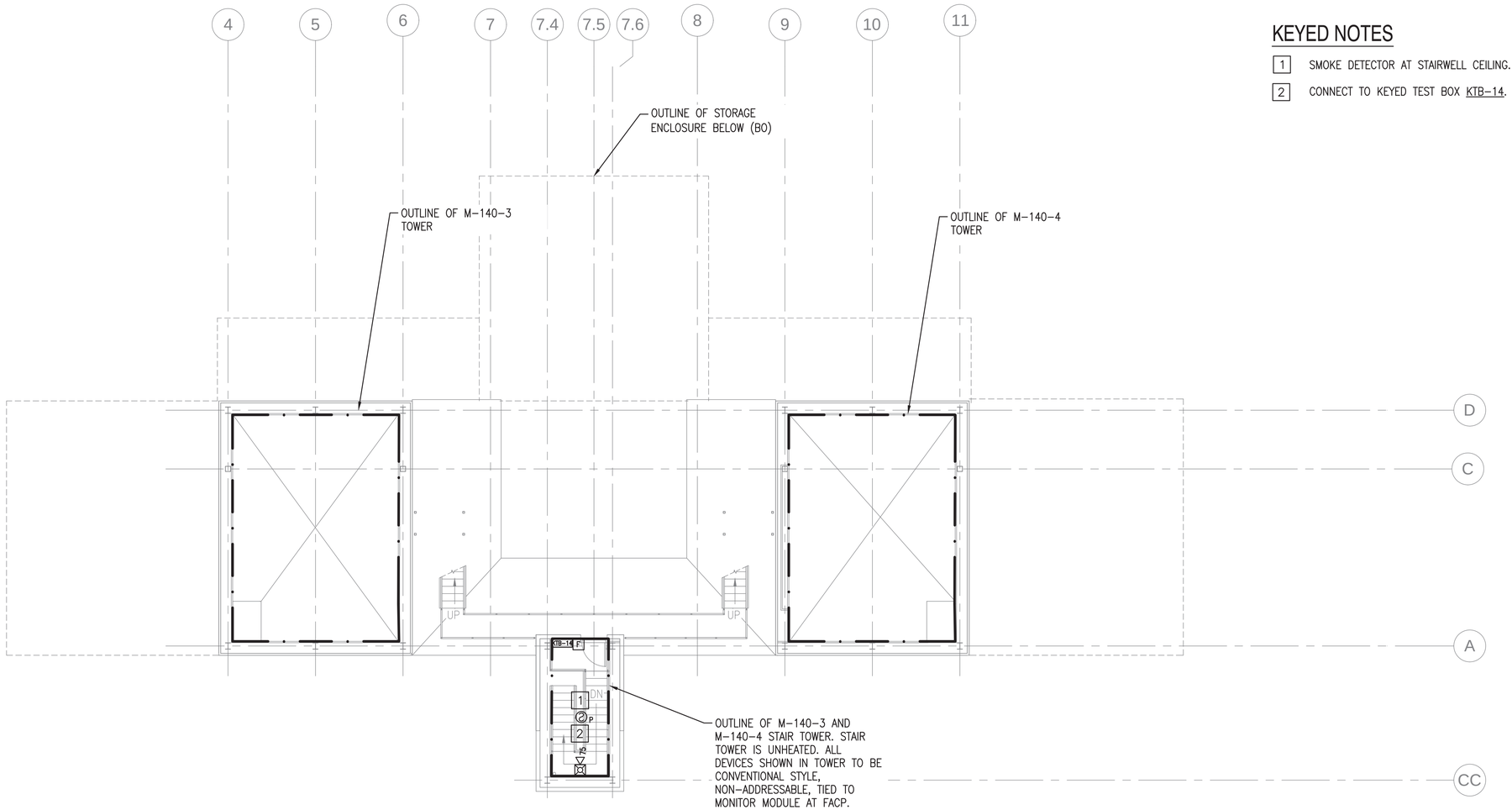

LEVEL 4 FIRE ALARM PLAN

SCALE: 1/8" = 1'–0"

PLAN NORTH

0 8' 16' 32'
Scale: 1/8" = 1'–0"

SYM	DESCRIPTION	DATE	APPR
0	ISSUED FOR CONSTRUCTION	10/28/2016	CBC

NAVFAC

STATE OF MAINE
EMILY PINYARD
No. 12126
LICENSED
PROFESSIONAL ENGINEER
10/28/16
SEAL

Colby Company engineering
A/E INFO

APPROVED
Baird W. Grunfeld
FOR COMMANDER NAVFAC

ACTIVITY
TIM FISHER
C. 2370.6 BRANCH HEAD

SATISFACTORY TO DATE 10/28/2016

DES	DRW	CHK
ERP	CSS	WEP

PMDM PETER STOCKLESS
BRANCH MANAGER IAN BODWELL
FEA/PM&E AMIN BAHROUR
FIRE PROTECTION PATRICK BAKAJ

DEPARTMENT OF THE NAVY
NAVAL FACILITIES ENGINEERING COMMAND
PUBLIC WORKS DEPARTMENT - MAINE

NAVAL FACILITIES ENGINEERING COMMAND ~ MID-ATLANTIC
NAVAL SHIPYARD - PORTSMOUTH, NH

PORTSMOUTH NAVAL SHIPYARD
DRY DOCK #1 DEFUELING COMPLEX
KITTERY, ME
M-140 COMPLEX
LEVEL 4 FIRE ALARM PLAN

EPROJECT NO.: 1363311
CONSTR. CONTR. NO. N40085-17-C-5002
NAVFAC DRAWING NO. 12734920
SHEET 137 OF 188

FA-104 | DD1-16-1001

DRAWFORM REVISION: 10 OCTOBER 2014

10/28/2016 6:49:42 AM X:\297 PORTSMOUTH NAVAL SHIPYARD\297.005.001 - DD#1 DEFUELING COMPLEX DESIGN\DRAWINGS\M140\SHEETS\FA-104.DWG

NOTES

1. SEE SHEET FA-001 FOR LEGEND, ABBREVIATIONS AND GENERAL NOTES.
2. KEYED TEST BOX LOCATIONS SHALL BE FIELD COORDINATED AND APPROVED BY PNSY PRIOR TO INSTALLATION.
3. THE M-140-3 TOWER SHALL BE PROGRAMMED AS DISCONNECT ZONE DZ-8 AT THE FACP AND TRANSMISSION ZONE TZ-8. SEE SITE SHEET FA-101.
4. THE M-140-4 TOWER SHALL BE PROGRAMMED AS DISCONNECT ZONE DZ-9 AT THE FACP AND TRANSMISSION ZONE TZ-9. SEE SITE SHEET FA-101.

KEYED NOTES

1. SIDEWALL SMOKE DETECTOR INSTALLED BETWEEN 4-INCHES AND 12-INCHES BELOW THE SMOOTH CEILING AND WITHIN 36" OF ROOF PEAK.
2. CONNECT TO KEYED TEST BOX KTB-15. SEE FA-103.
3. CONNECT TO KEYED TEST BOX KTB-16. SEE FA-103.
4. CONNECT TO KEYED TEST BOX KTB-17. SEE FA-103.
5. CONNECT TO KEYED TEST BOX KTB-18. SEE FA-103.

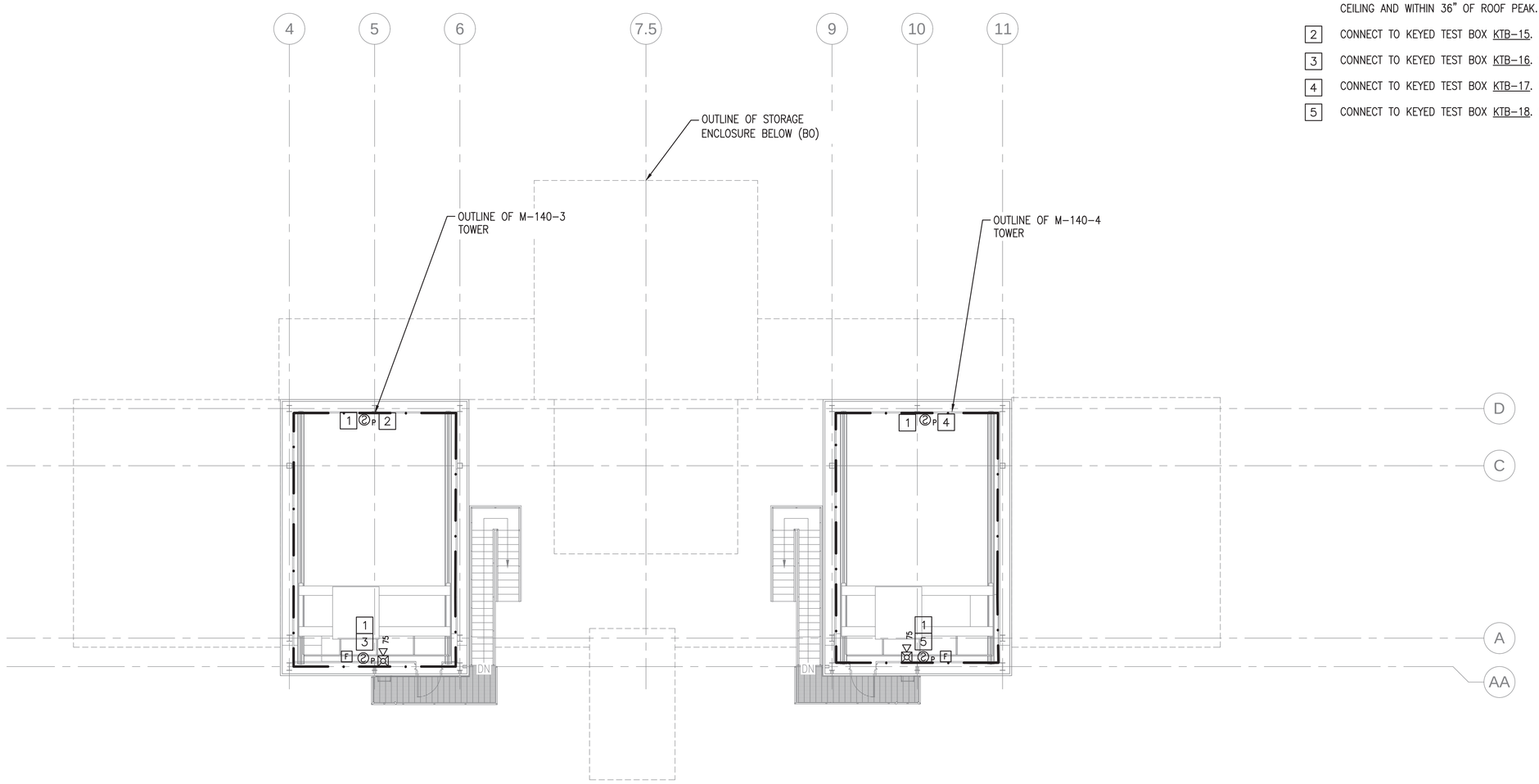

CRANE LEVEL FIRE ALARM PLAN

SCALE: 1/8" = 1'-0"

PLAN NORTH

0 4' 8' 16'
Scale: 1/8" = 1'-0"

SYM	DESCRIPTION	DATE	APPR
0	ISSUED FOR CONSTRUCTION	10/28/2016	CBC

NAVFAC

STATE OF MAINE
EMILY PINYARD
No. 12126
LICENSED
PROFESSIONAL ENGINEER
10/28/16
SEAL

Colby Company engineering
A/E INFO

APPROVED
David W. Thurnfield
FOR COMMANDER NAVFAC

ACTIVITY
TIM FISHER
C. 2370.6 BRANCH HEAD

SATISFACTORY TO DATE 10/28/2016

DES	ERP	DRW	CSS	CHK	WEP

PM/DM PETER STOCKLESS
BRANCH MANAGER IAN BODWELL
FEAD/PM&E AMIN BAHROUR
FIRE PROTECTION PATRICK BAKAJ

DEPARTMENT OF THE NAVY
NAVAL FACILITIES ENGINEERING COMMAND
PUBLIC WORKS DEPARTMENT - MAINE

NAVAL FACILITIES ENGINEERING COMMAND ~ MID-ATLANTIC
NAVAL SHIPYARD - PORTSMOUTH, NH

PORTSMOUTH NAVAL SHIPYARD
KITTERY, ME

DRY DOCK #1 DEFUELING COMPLEX
M-140 COMPLEX

CRANE LEVEL FIRE ALARM PLAN

EPROJECT NO.: 1363311
CONSTR. CONTR. NO. N40085-17-C-5002
NAVFAC DRAWING NO. 12734921
SHEET 138 OF 188

FA-105 | DD1-16-1002

DRAWFORM REVISION: 10 OCTOBER 2014

10/28/2016 6:49:46 AM X:\297 PORTSMOUTH NAVAL SHIPYARD\297.005.001 - DD#1 DEFUELING COMPLEX DESIGN\DRAWINGS\M140\SHEETS\FA-105.DWG

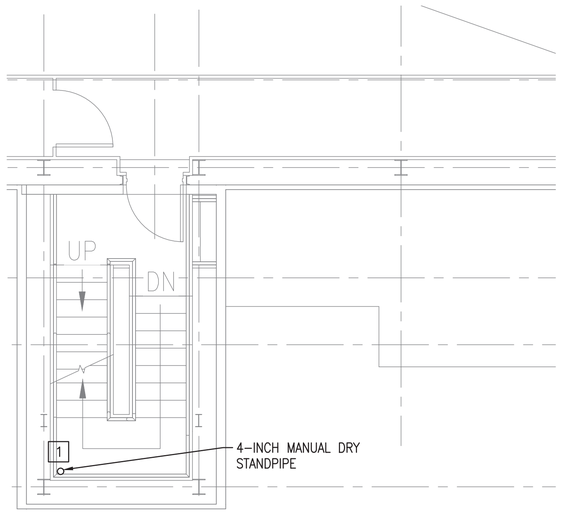

LEVEL 1 FIRE PROTECTION PLAN

SCALE: 1/4" = 1'-0"

PLAN NORTH

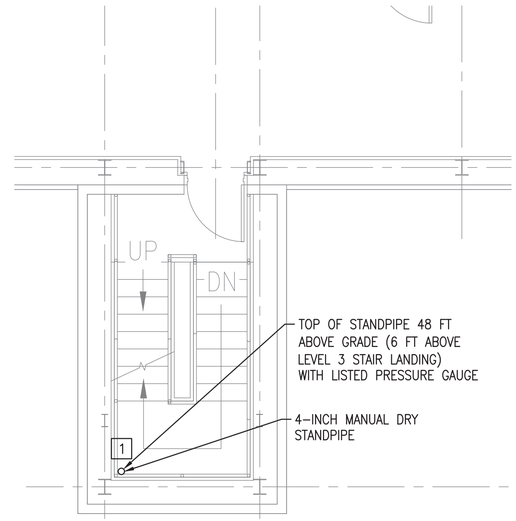

LEVEL 3 FIRE PROTECTION PLAN

SCALE: 1/4" = 1'-0"

PLAN NORTH

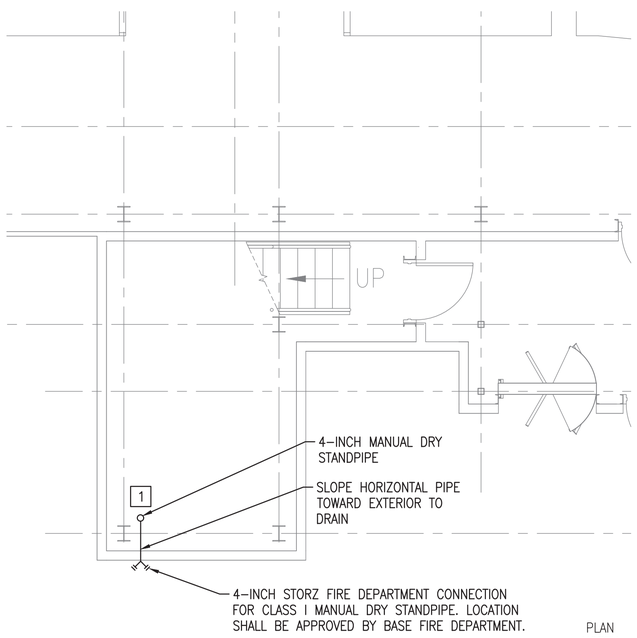

GROUND LEVEL FIRE PROTECTION PLAN

SCALE: 1/4" = 1'-0"

PLAN NORTH

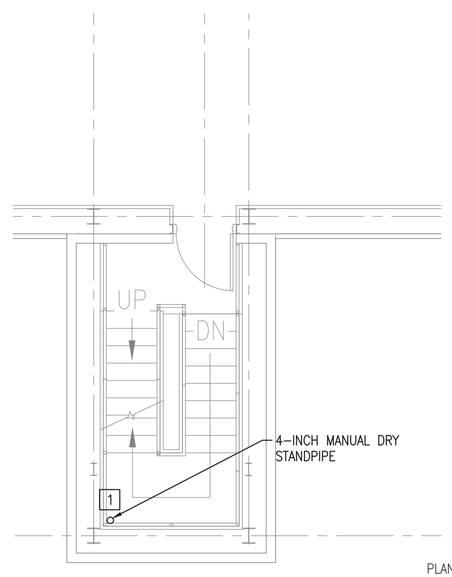

LEVEL 2 FIRE PROTECTION PLAN

SCALE: 1/4" = 1'-0"

PLAN NORTH

NOTES

1. PROVIDE AN NFPA 14-COMPLIANT CLASS I MANUAL DRY STANDPIPE SYSTEM.
2. PIPING SHALL BE SCHEDULE 10 GALVANIZED STEEL WITH ROLL GROOVED ENDS AND MECHANICAL COUPLINGS.
3. COORDINATE WITH ERECTOR ON STANDPIPE SUPPORTS. SEE STRUCTURAL SHEET S-509 FOR DETAILS.
4. PER UFC-3-600, THE FIRE DEPARTMENT CONNECTION (FDC) MUST BE WITHIN 150 FEET OF A HYDRANT AS WELL AS ALL-WEATHER GROUND ACCESS FOR A PUMPER APPARATUS. BASED ON THE SITE PACKAGE SHEET LS-101, THE M-140 COMPLEX FDC LOCATION COMPLIES.

KEYED NOTES

1. FIRE DEPARTMENT HOSE CONNECTION INSTALLED 4 FT ABOVE FINISHED FLOOR OF STAIR LANDING. CONNECTION SHALL CONSIST OF A 2.5-INCH STRAIGHT GLOBE HOSE VALVE WITH NATIONAL PIPE THREAD FEMALE INLET AND HOSE THREAD MALE OUTLET. POTTER ROEMER MODEL 4115 OR EQUAL. PROVIDE CAP AT MALE END OF VALVE.

SYM	DESCRIPTION	DATE	APPR
0	ISSUED FOR CONSTRUCTION	10/28/2016	CBC

NAVFAC

STATE OF MAINE
EMILY PINYARD
No. 12126
LICENSED
PROFESSIONAL ENGINEER
10/28/16
SEAL

Colby Company engineering
A/E INFO

APPROVED
David W. Thurnfield
FOR COMMANDER NAVFAC

ACTIVITY
TIM FISHER
C. 2370.6 BRANCH HEAD

SATISFACTORY TO DATE 10/28/2016

DES ERP | DRW CSS | CHK WEP

PMDM PETER STOCKLESS
BRANCH MANAGER IAN BODWELL
FEA/DPM&E AMIN BAHROUR
FIRE PROTECTION PATRICK BAKAJ

DEPARTMENT OF THE NAVY
NAVAL FACILITIES ENGINEERING COMMAND
PUBLIC WORKS DEPARTMENT - MAINE

NAVAL FACILITIES ENGINEERING COMMAND ~ MID-ATLANTIC
NAVAL SHIPYARD - PORTSMOUTH, NH

PORTSMOUTH NAVAL SHIPYARD
KITTERY, ME

DRY DOCK #1 DEFUELING COMPLEX
M-140 COMPLEX

FIRE PROTECTION PLANS

EPROJECT NO.: 1363311

CONSTR. CONTR. NO.
N40085-17-C-5002

NAVFAC DRAWING NO.
12734922

SHEET 139 OF 188

FP-100 | DD1-16-1003

0 2' 4' 8'
Scale: 1/4" = 1'-0"

DRAWFORM REVISION: 10 OCTOBER 2014

10/28/2016 6:49:52 AM X:\297 PORTSMOUTH NAVAL SHIPYARD\297.005.001 - DD#1 DEFUELING COMPLEX DESIGN\DRAWINGS\M140\SHEETS\FP-100.DWG

ABBREVIATIONS

A	AMP
ACS	ACCESS
ACE	ACCESS CONTROL ENCLOSURE
AFF	ABOVE FINISHED FLOOR
AHU	AIR–HANDLING UNIT
APD	AIR PRESSURE DROP
BHP	BRAKE HORSEPOWER
C	CONDENSATE
CA	COMPRESSED AIR
CF	CEILING FAN
CFM	CUBIC FEET PER MINUTE
CLG	COOLING
DB	DRY BULB
DEG	DEGREE
DIA, ø	DIAMETER
DN	DOWN
DP,DPS	DIFFERENTIAL–PRESSURE SENSOR
EA	EACH, EXHAUST AIR
EAT	ENTERING AIR TEMPERATURE
EDH	ELECTRIC DUCT HEATER
EUH	ELECTRIC UNIT HEATER
ESP	EXTERNAL STATIC PRESSURE
EWT	ENTERING WATER TEMPERATURE
F	FAN, FAHRENHEIT
FH	FILTER HOUSING
FT	FEET
GA	GAUGE
GM	GEAR MOTOR
GPM	GALLONS PER MINUTE
HP	HEAT PUMP, HORSEPOWER
HR	HOUR
HTG	HEATING
HZ	HERTZ
IC	INSTRUMENTATION AND CONTROL
IN	INCHES
LAT	LEAVING AIR TEMPERATURE
LB	POUND
LCP	LOCAL CONTROL PANEL
LPC	LOW PRESSURE CONDENSATE
LPS	LOW PRESSURE STEAM
LWT	LEAVING WATER TEMPERATURE
MAX	MAXIMUM
MBH	1000 BTU PER HOUR
MCP	MAIN CONTROL PANEL
MIN	MINIMUM
NC	NOISE CRITERIA
NPT	NATIONAL PIPE THREAD
NTS	NOT TO SCALE
OA	OUTSIDE AIR
OIT	OPERATOR INTERFACE TERMINAL
PD	PRESSURE DROP
PDS	PRESSURE DIFFERENTIAL SWITCH
PE	PHOTOEYE
PH	PHASE
PS	PRESSURE SWITCH
PT	PRESSURE TRANSMITTER
RA	RETURN AIR
RCP	ROOF CONTROL PANEL
RPM	REVOLUTIONS PER MINUTE
SA	SUPPLY AIR
SP	STATIC PRESSURE
SS	STAINLESS STEEL
T	TEMPERATURE SENSOR, THERMOSTAT
TSP	TOTAL STATIC PRESSURE
TYP	TYPICAL
VFD	VARIABLE FREQUENCY DRIVE
W/	WITH
WB	WET–BULB, WHEEL BLOCK
WC	WATER COLUMN
WG	WATER GAUGE
WPD	WATER PRESSURE DROP
ZSC	POSITION SWITCH CLOSED
ZSO	POSITION SWITCH OPEN

DUCTWORK SYMBOLS

- RETURN/EXHAUST DUCT UP
- RETURN/EXHAUST DUCT DOWN
- SUPPLY DUCT UP
- SUPPLY DUCT DOWN
- RADIUS ELBOW
- SQUARE ELBOW W/ TURNING VANES
- OFFSET
- DUCT TRANSITION FROM RECTANGULAR TO ROUND

MECHANICAL LINETYPE LEGEND

- EXISTING ITEMS TO REMAIN
- ITEMS TO BE PROVIDED
- HIDDEN ITEMS
- CONTROL WIRING

MECHANICAL SYMBOLS

- SECTION NUMBER
- DRAWING WHERE SECTION IS DRAWN
- H / 2 — SYMBOL PER ABBREVIATION LIST
- EQUIPMENT SEQUENCE NUMBER
- S–1 / 100 — DIFFUSER, REGISTER OR GRILLE SEQUENCE NUMBER
- CFM
- UNIT HEATER
- DIRECTION OF AIR FLOW
- VOLUME DAMPER
- M — MOTORIZED DAMPER
- T — THERMOSTAT
- DP — DIFFERENTIAL PRESSURE SENSOR
- T — TEMPERATURE SENSOR
- CONNECT TO EXISTING
- FAN
- MANUAL DAMPER, HAND WHEEL
- H — HAND DAMPER ACTUATOR
- VARIABLE–AREA FLOW METER
- +15 / +15 — SMACNA DUCT PRESSURE CLASS DESIGNATION MARKER

PIPING SYMBOLS

- BALANCING VALVE
- COMBINATION FLOW MEASURING/ BALANCING VALVE (CIRCUIT SETTER)
- BUTTERFLY VALVE
- GATE VALVE
- BALL VALVE
- GLOBE VALVE
- TWO–WAY AUTOMATIC CONTROL VALVE
- SAFETY RELIEF VALVE
- THREE–WAY AUTOMATIC CONTROL VALVE
- STRAINER W/BALL DRAIN VALVE, HOSE BIB AND CAP
- UNION OR FLANGE AS DICTATED BY PIPE SIZE
- PIPE RISE
- PIPE DROP
- END CAP
- THERMOMETER TEMPERATURE/PRESSURE WELL
- P/T PORT (PRESSURE/TEMPERATURE)
- MANUAL AIR VENT
- REDUCER (ECCENTRIC–FOB OR FOT)
- REDUCER (CONCENTRIC)
- DIRECTION OF FLOW OF PIPE

APPLICABLE CODES AND STANDARDS

- UFC 3–410–04N INDUSTRIAL VENTILATION
- UFC 3–400–01FA HVAC
- DOE HDBK 1169–2003 NUCLEAR AIR CLEANING HANDBOOK
- ASME AG–1 CODE ON NUCLEAR AIR AND GAS TREATMENT
- SMACNA – HVAC AIR DUCT LEAKAGE MANUAL
- SMACNA – HVAC DUCT CONSTRUCTION STANDARDS

GENERAL NOTES

1. GENERAL NOTES, SYMBOLS LIST AND DETAILS ARE APPLICABLE TO DRAWINGS MARKED M–#.
2. DRAWINGS ARE DIAGRAMMATIC; DETERMINE LOCATIONS OF SYSTEMS AND COMPONENTS IN FIELD.
3. COORDINATE WORK OF THIS SECTION WITH THAT OF OTHER SECTIONS. SPECIFICALLY STRUCTURAL PENETRATIONS OF DUCTWORK AND PIPING THROUGH ENCLOSURE WALL AND PLATFORM GRATING.
4. INSTALL CENTER OF SCREEN CONTROL PANELS 5 FEET ABOVE FINISHED FLOOR.
5. WORK SHALL BE COORDINATED WITH TRADES INVOLVED. OFFSETS IN PIPING AND DUCTS (INCLUDING DIVIDED DUCTS) AND TRANSITIONS AROUND OBSTRUCTIONS SHALL BE PROVIDED AT NO ADDITIONAL COST TO THE GOVERNMENT.
6. VERIFY EQUIPMENT CONNECTIONS WITH MANUFACTURER'S CERTIFIED DRAWINGS. VERIFY AND PROVIDE DUCT TRANSITIONS TO FURNISHED EQUIPMENT. FIELD VERIFY AND COORDINATE ALL DIMENSIONS BEFORE FABRICATION.
7. INSTALL EQUIPMENT, PIPING AND DUCTWORK AS REQUIRED TO PROVIDE A VIBRATION FREE INSTALLATION AND TO FACILITATE EQUIPMENT ACCESS AS REQUIRED BY EQUIPMENT MANUFACTURER.
8. INTERNAL AIR FLOW DIMENSIONS ARE SHOWN FOR DUCTS.
9. PROVIDE CLAMPS, OFFSETS, EXPANSION JOINTS, ANCHORS AND GUIDES AS NECESSARY TO PREVENT STRESS ON PIPING.
10. PROVIDE VENTS AT HIGH POINTS IN PIPING SYSTEMS AND DRAIN VALVES AT LOW POINTS. THIS INCLUDES LOW POINTS IN COMPRESSED AIR SYSTEM PIPING TO ACCOMMODATE DRAINING MOISTURE IN LINES.
11. PROVIDE AT LEAST THREE–ELBOW SWINGS FOR PIPE TAKE–OFFS.
12. REFER TO IC–101 AND IC–200 FOR INSTRUMENTATION AND CONTROL.
13. ALL MANUALLY OPERABLE EQUIPMENT SHALL BE ACCESSIBLE FOR OPERATION WITHOUT REQUIRING SPECIAL EQUIPMENT.
14. PROVIDE ADEQUATE CLEARANCE FOR ACCESS TO HARDWARE AND DUCT FLANGES.
15. REFER TO SPECIFICATIONS FOR SEQUENCE OF OPERATIONS.
16. REFER TO GA DRAWINGS SHOWING RCA BOUNDARIES FOR SPACE PRESSURIZATION ZONES.

SYM	DESCRIPTION	DATE	APPR
0	ISSUED FOR CONSTRUCTION	10/28/2016	CBC

NAVFAC

STATE OF MAINE — PETER W. BROWN No. 5743 — PROFESSIONAL ENGINEER — 10/28/16 — SEAL

Colby Company engineering — A/E INFO

APPROVED: David W. Thurnfield — FOR COMMANDER NAVFAC

ACTIVITY: TIM FISHER, C. 2370.6 BRANCH HEAD

SATISFACTORY TO: DATE 10/28/2016

DES	DRW	CHK
EAF	CSS	PWB

PM/DM: PETER STOCKLESS
BRANCH MANAGER: IAN BODWELL
FEA/PM/AE: AMIN BAHROUR
FIRE PROTECTION: PATRICK BAKAJ

DEPARTMENT OF THE NAVY
NAVAL FACILITIES ENGINEERING COMMAND
PUBLIC WORKS DEPARTMENT - MAINE

NAVAL FACILITIES ENGINEERING COMMAND – MID-ATLANTIC
NAVAL SHIPYARD - PORTSMOUTH, NH

PORTSMOUTH NAVAL SHIPYARD
DRY DOCK #1 DEFUELING COMPLEX
M-140 COMPLEX

KITTERY, ME

MECHANICAL LEGEND, ABBREVIATIONS AND GENERAL NOTES

EPROJECT NO.: 1363311
CONSTR. CONTR. NO.: N40085-17-C-5002
NAVFAC DRAWING NO.: 12734923
SHEET 140 OF 188

M-001 | DD1-16-1004

DRAWFORM REVISION: 10 OCTOBER 2014

10/28/2016 6:49:56 AM X:\297 PORTSMOUTH NAVAL SHIPYARD\297.005.001 - DD#1 DEFUELING COMPLEX\DESIGN\DRAWINGS\M140\SHEETS\M-001.DWG

NOTES

1. SEE SHEET M-001 FOR LEGEND, ABBREVIATIONS AND GENERAL NOTES.
2. SEE SHEET M-505 FOR VENTILATION SKID ARRANGEMENT.
3. INSTALL ELECTRICAL UNIT HEATERS FROM STRUCTURE AT 8' AFF WITH MANUFACTURES SUPPLIED BRACKETS.

KEYED NOTES

1. PROVIDE 1-1/2" COMPRESSED AIR MANIFOLD WITH (3) 1" VALVES, SHUTOFF VALVE AND UNIVERSAL COUPLER. INSTALL 4 FEET AFF. ROUTE PIPING TIGHT TO STRUCTURAL FRAMING. PROVIDE LOW POINT DRAINS TO DRAIN MOISTURE. SEE SHEET M-503 FOR DETAIL OF MANIFOLD.
2. SURFACE MOUNT CEILING FAN CF-1 CONTROLLER WITH FIRE ALARM INTERLOCK AND VFD BOX.

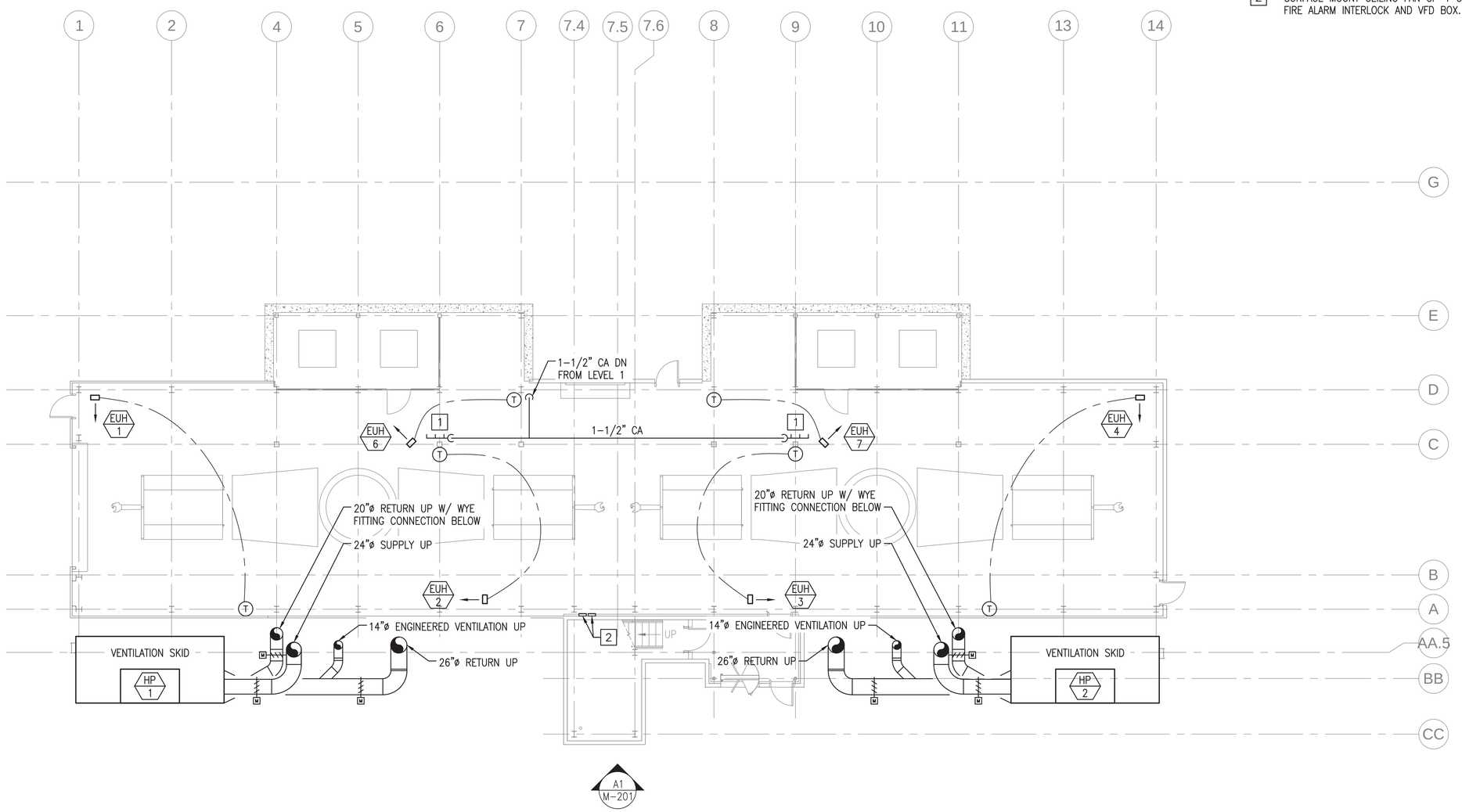

GROUND LEVEL MECHANICAL PLAN (NO STORAGE ENCLOSURE)

SCALE: 1/8" = 1'-0"

PLAN NORTH

0 4' 8' 16'
Scale: 1/8" = 1'-0"

SYM	DESCRIPTION	DATE	APPR
0	ISSUED FOR CONSTRUCTION	10/28/2016	CBC

NAVFAC

STATE OF MAINE
PETER W. BROWN
No. 5743
REGISTERED PROFESSIONAL ENGINEER
10/28/16
SEAL

Colby Company engineering
A/E INFO

APPROVED
David W. Thumfeld
FOR COMMANDER NAVFAC

ACTIVITY
TIM FISHER
C. 2370.6 BRANCH HEAD

SATISFACTORY TO DATE 10/28/2016
DES EAF DRW CSS CHK PWB
PMDM PETER STOCKLESS
BRANCH MANAGER IAN BODWELL
FEAD/PM&E AMIN BAHROUR
FIRE PROTECTION PATRICK BAKAJ

DEPARTMENT OF THE NAVY
NAVAL FACILITIES ENGINEERING COMMAND
PUBLIC WORKS DEPARTMENT - MAINE
NAVAL FACILITIES ENGINEERING COMMAND ~ MID-ATLANTIC
NAVAL SHIPYARD - PORTSMOUTH, NH
PORTSMOUTH NAVAL SHIPYARD
KITTERY, ME
DRY DOCK #1 DEFUELING COMPLEX
M-140 COMPLEX
GROUND LEVEL MECHANICAL PLAN (NO STORAGE ENCLOSURE)

EPROJECT NO.: 1363311
CONSTR. CONTR. NO. N40085-17-C-5002
NAVFAC DRAWING NO. 12734924
SHEET 141 OF 188
M-100 DD1-16-1005

DRAWFORM REVISION: 10 OCTOBER 2014

10/28/2016 6:50:00 AM X:\297 PORTSMOUTH NAVAL SHIPYARD\297.005.001 - DD#1 DEFUELING COMPLEX DESIGN\DRAWINGS\M140\SHEETS\M-100.DWG

NOTES

1. SEE SHEET M-001 FOR LEGEND, ABBREVIATIONS AND GENERAL NOTES.
2. THIS DRAWING INCLUDES BID OPTIONS FOR STORAGE ENCLOSURE ONLY. SEE SHEET M-100 FOR CONTINUATION OF MECHANICAL SYSTEMS.

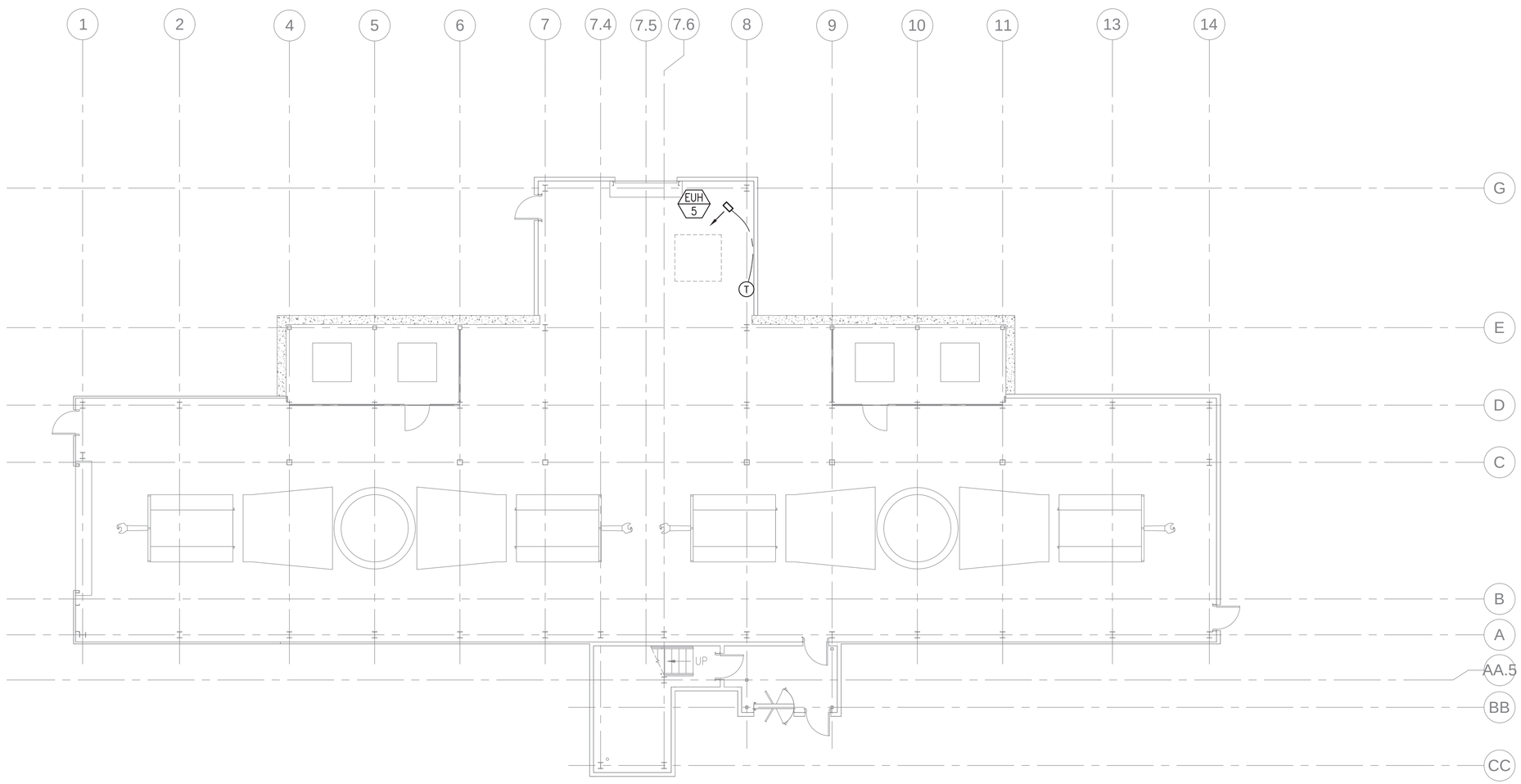

GROUND LEVEL MECHANICAL PLAN

SCALE: 1/8" = 1'-0"

PLAN NORTH

0 4' 8' 16'
Scale: 1/8" = 1'-0"

SYM	DESCRIPTION	DATE	APPR
0	ISSUED FOR CONSTRUCTION	10/28/2016	CBC

NAVFAC

STATE OF MAINE
PETER W. BROWN
No. 5743
PROFESSIONAL ENGINEER
10/28/16
SEAL

Colby Company engineering
A/E INFO

APPROVED
David W. Thumfeld
FOR COMMANDER NAVFAC

ACTIVITY
TIM FISHER
C. 2370.6 BRANCH HEAD

SATISFACTORY TO DATE 10/28/2016

DES	DRW	CHK
EAF	CSS	PWB

PMDM	PETER STOCKLESS
BRANCH MANAGER	IAN BODWELL
FEAD/PM&E	AMIN BAHROUR
FIRE PROTECTION	PATRICK BAKAJ

DEPARTMENT OF THE NAVY
NAVAL FACILITIES ENGINEERING COMMAND
PUBLIC WORKS DEPARTMENT - MAINE

NAVAL FACILITIES ENGINEERING COMMAND ~ MID-ATLANTIC
NAVAL SHIPYARD - PORTSMOUTH, NH

PORTSMOUTH NAVAL SHIPYARD
KITTERY, ME

DRY DOCK #1 DEFUELING COMPLEX
M-140 COMPLEX

GROUND LEVEL MECHANICAL PLAN

EPROJECT NO.: 1363311

CONSTR. CONTR. NO.
N40085-17-C-5002

NAVFAC DRAWING NO.
12734925

SHEET 142 OF 188

M-100A | DD1-16-1006

DRAWFORM REVISION: 10 OCTOBER 2014

10/28/2016 6:50:05 AM X:\297 PORTSMOUTH NAVAL SHIPYARD\297.005.001 - DD#1 DEFUELING COMPLEX DESIGN\DRAWINGS\M140\SHEETS\M-100A.DWG

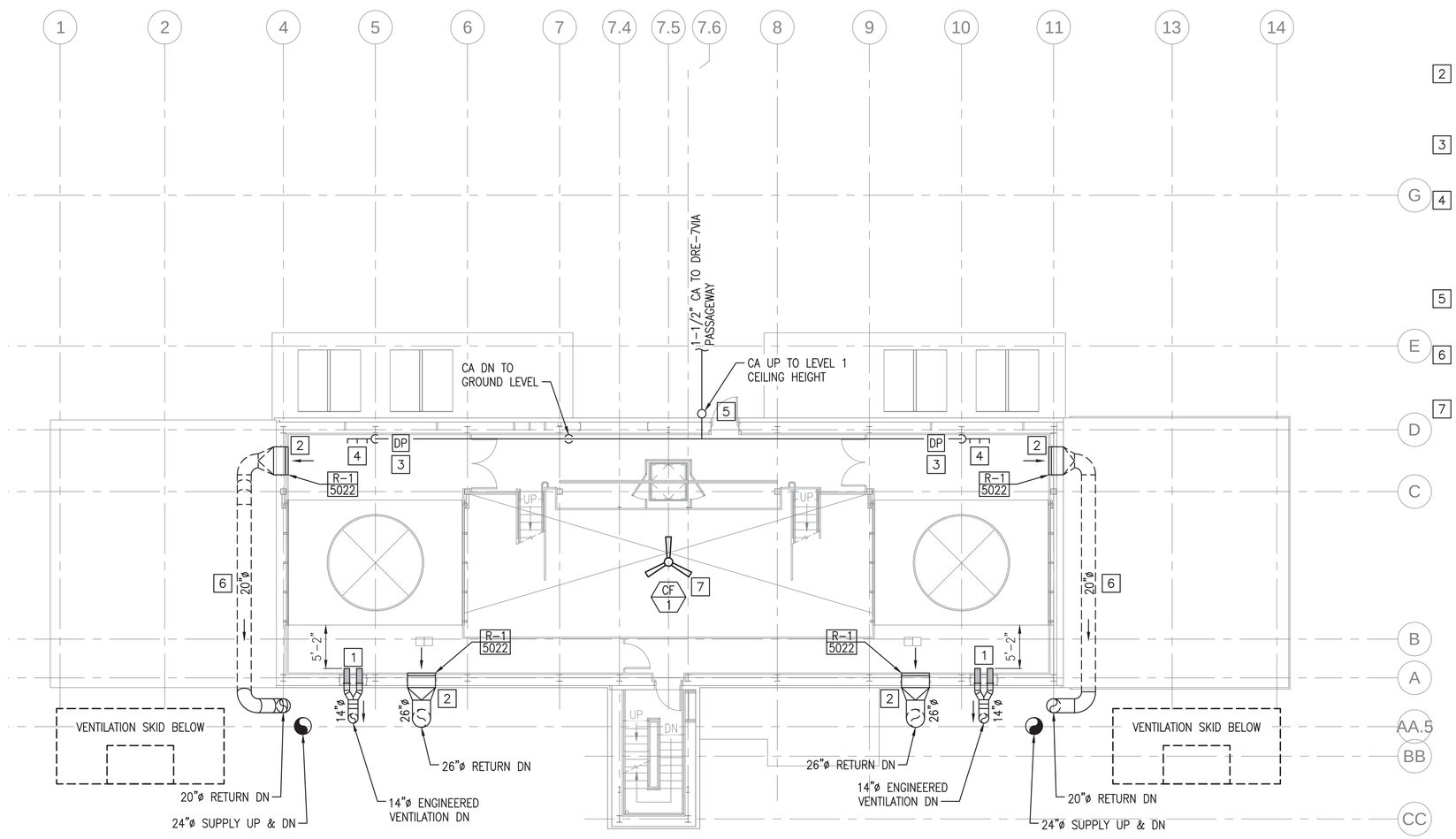

LEVEL 1 MECHANICAL PLAN (NO STORAGE ENCLOSURE)

SCALE: 1/8" = 1'-0"

PLAN NORTH

NOTES

1. SEE SHEET M-001 FOR LEGEND, ABBREVIATIONS AND GENERAL NOTES.
2. REFER TO STRUCTURAL AND ARCHITECTURAL DRAWINGS FOR PENETRATION DETAILS.
3. PROVIDE BOLTED FLANGED CONNECTION BETWEEN WALL SLEEVE AND TRANSITION INTO ENCLOSURE, SEE ARCHITECTURAL FOR PENETRATION DETAIL. DUCT MUST BE CAPABLE OF BEING REMOVED FROM ENCLOSURE WITHOUT CUTTING.
4. REFER TO PASSAGEWAY DRAWINGS FOR CA CONTINUATION.

KEYED NOTES

1. (2) 8"ø ENGINEERED VENT CONNECTIONS WITH ELECTRICALLY ACTUATED DAMPER AND FLOW MEASUREMENT SECTION. MOUNT BOTTOM OF DUCT AT 2'-0" AFF. MOUNT DP SENSOR WITHIN REACH. SEE SHEET M-501 AND S-512 FOR DETAILS.
2. MOUNT BOTTOM OF RETURN GRILLE 6" AFF. REFER TO STRUCTURAL PENETRATION DETAIL ON SHEET S-512. MAX CFM SHOWN FOR WHEN ENGINEERED VENTS ARE CLOSED.
3. NEGATIVE DP SENSOR PORT FOR MONITORING. LOCATE THRU WALL 5 FEET AFF. SEE SHEET M-501 FOR DETAIL.
4. PROVIDE 1-1/2" COMPRESSED AIR MANIFOLD WITH (3) 1" VALVES, SHUTOFF VALVE AND UNIVERSAL COUPLER. INSTALL 4 FEET AFF. ROUTE PIPING TIGHT TO WALL AND CEILING. PROVIDE LOW POINT DRAINS TO DRAIN MOISTURE. SEE SHEET M-503 FOR DETAIL.
5. PROVIDE BLAST GATE AT DOOR LOUVER FOR PASSAGEWAY AIR TRANSFER CONTROL. SEE SHEET M-501 FOR DETAIL.
6. OFFSET DUCTWORK TO MAINTAIN CLEAR PASSAGE FOR RAILCAR (16'Wx18'H). MOUNT DUCT TIGHT TO ROOF STRUCTURE.
7. MOUNT TO FRAMING OF LEVEL 2 FLOOR WITH MANUFACTURER'S SUPPLIED BEAM BRACKET, SAFETY CABLE, AND GUY WIRES. COORDINATE WITH STRUCTURAL, DRAWING S-102.

SYM	DESCRIPTION	DATE	APPR
0	ISSUED FOR CONSTRUCTION	10/28/2016	CBC

NAVFAC

STATE OF MAINE
PETER W. BROWN
No. 5743
REGISTERED PROFESSIONAL ENGINEER
10/28/16
SEAL

Colby Company engineering
A/E INFO

APPROVED
David W. Thumfeld
FOR COMMANDER NAVFAC

ACTIVITY
TIM FISHER
C. 2370.6 BRANCH HEAD

SATISFACTORY TO DATE 10/28/2016

DES	EAF	DRW	CSS	CHK	PWB

PMDM	PETER STOCKLESS
BRANCH MANAGER	IAN BODWELL
FEAD/PM&E	AMIN BAHROUR
FIRE PROTECTION	PATRICK BAKAJ

DEPARTMENT OF THE NAVY
NAVAL FACILITIES ENGINEERING COMMAND
PUBLIC WORKS DEPARTMENT - MAINE

NAVAL FACILITIES ENGINEERING COMMAND ~ MID-ATLANTIC
NAVAL SHIPYARD - PORTSMOUTH, NH

PORTSMOUTH NAVAL SHIPYARD
KITTERY, ME

DRY DOCK #1 DEFUELING COMPLEX
M-140 COMPLEX

LEVEL 1 MECHANICAL PLAN (NO STORAGE ENCLOSURE)

EPROJECT NO.: 1363311

CONSTR. CONTR. NO.
N40085-17-C-5002

NAVFAC DRAWING NO.
12734926

SHEET 143 OF 188

M-101 | DD1-16-1007

DRAWFORM REVISION: 10 OCTOBER 2014

0 4' 8' 16'
Scale: 1/8" = 1'-0"

10/28/2016 6:50:10 AM X:\297 PORTSMOUTH NAVAL SHIPYARD\297.005.001 - DD#1 DEFUELING COMPLEX DESIGN\DRAWINGS\M140\SHEETS\M-101.DWG

NOTES

1. SEE SHEET M-001 FOR LEGEND, ABBREVIATIONS AND GENERAL NOTES.
2. THIS DRAWING INCLUDES BID OPTIONS FOR STORAGE ENCLOSURE ONLY. SEE SHEET M-101 FOR CONTINUATION OF MECHANICAL SYSTEMS.
3. REFER TO PASSAGEWAY DRAWINGS FOR CA CONTINUATION.

KEYED NOTES

1. NEGATIVE DP SENSOR PORT FOR MONITORING AND CONTROL. LOCATE THRU WALL 5 FEET AFF. SEE SHEET M-501 FOR DETAIL.
2. PROVIDE 1-1/2" COMPRESSED AIR MANIFOLD WITH (3) 1" VALVES, SHUTOFF VALVE AND UNIVERSAL COUPLER. INSTALL 4 FEET AFF. ROUTE PIPING TIGHT TO WALL AND CEILING. PROVIDE LOW POINT DRAINS TO DRAIN MOISTURE. SEE SHEET M-503 FOR DETAIL.
3. PROVIDE BLAST GATE AT DOOR LOUVER FOR PASSAGEWAY AIR TRANSFER CONTROL. SEE SHEET M-501 FOR DETAIL.

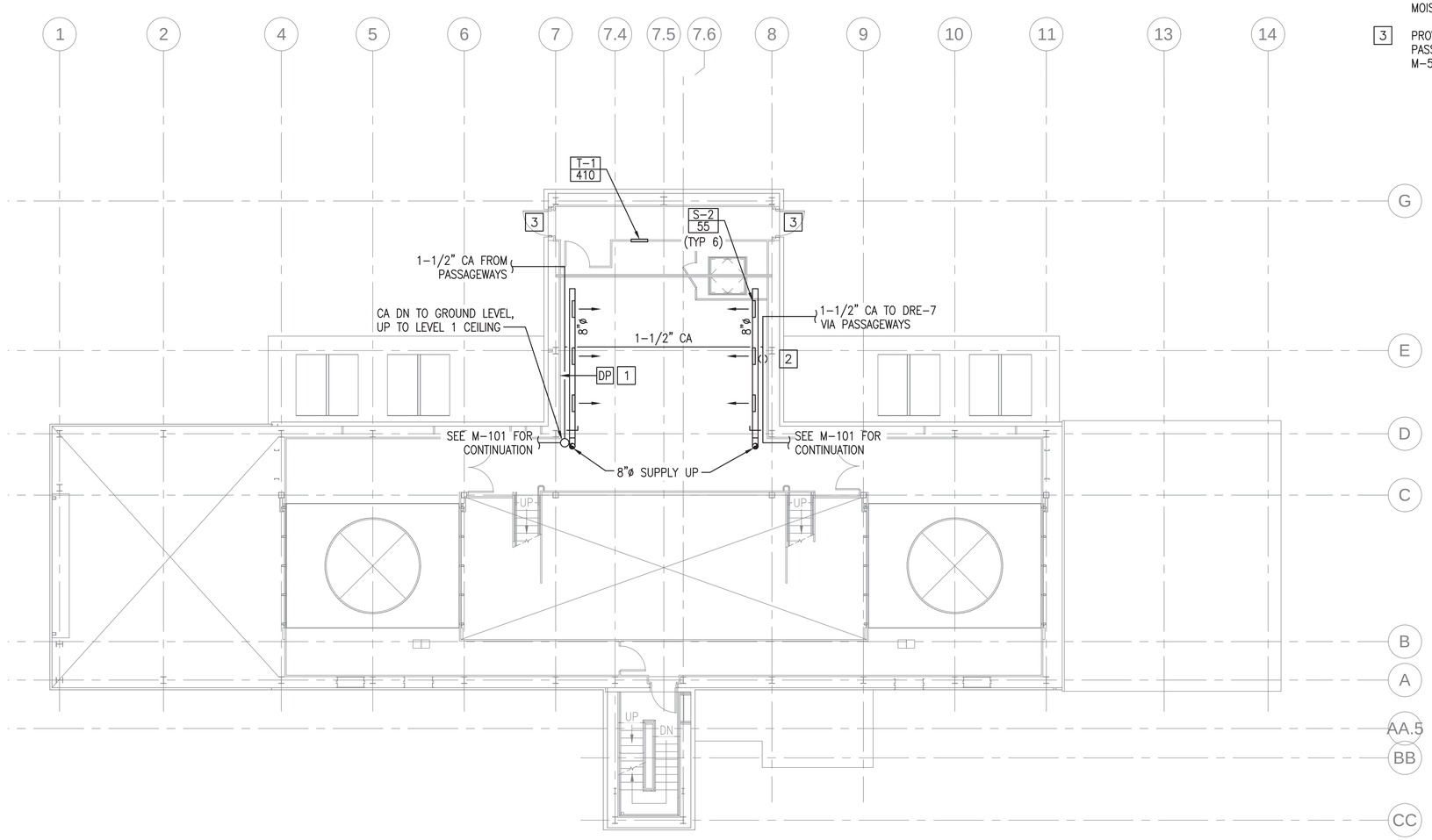

LEVEL 1 MECHANICAL PLAN

SCALE: 1/8" = 1'-0"

PLAN NORTH

0 4' 8' 16'
Scale: 1/8" = 1'-0"

SYM	DESCRIPTION	DATE	APPR
0	ISSUED FOR CONSTRUCTION	10/28/2016	CBC

NAVFAC

STATE OF MAINE
PETER W. BROWN
No. 5743
PROFESSIONAL ENGINEER
10/28/16
SEAL

Colby Company engineering
A/E INFO

APPROVED
David W. Thurnfield
FOR COMMANDER NAVFAC

ACTIVITY
TIM FISHER
C. 2370.6 BRANCH HEAD

SATISFACTORY TO DATE 10/28/2016

DES	EAF	DRW	CSS	CHK	PWB

PM/DM	PETER STOCKLESS
BRANCH MANAGER	IAN BODWELL
FEA/DPM&E	AMIN BAHROUR
FIRE PROTECTION	PATRICK BAKAJ

DEPARTMENT OF THE NAVY
NAVAL FACILITIES ENGINEERING COMMAND
PUBLIC WORKS DEPARTMENT - MAINE

NAVAL FACILITIES ENGINEERING COMMAND ~ MID-ATLANTIC
NAVAL SHIPYARD - PORTSMOUTH, NH

PORTSMOUTH NAVAL SHIPYARD
KITTERY, ME

DRY DOCK #1 DEFUELING COMPLEX
M-140 COMPLEX

LEVEL 1 MECHANICAL PLAN

EPROJECT NO.: 1363311

CONSTR. CONTR. NO.: N40085-17-C-5002

NAVFAC DRAWING NO. 12734927

SHEET 144 OF 188

M-101A | DD1-16-1008

DRAWFORM REVISION: 10 OCTOBER 2014

10/28/2016 6:50:14 AM X:\297 PORTSMOUTH NAVAL SHIPYARD\297.005.001 - DD#1 DEFUELING COMPLEX DESIGN\DRAWINGS\M140\SHEETS\M-101A.DWG

NOTES

1. SEE SHEET M-001 FOR LEGEND, ABBREVIATIONS AND GENERAL NOTES.
2. SURFACE MOUNT EXPOSED DUCT TIGHT TO PLASCORE CEILING PANEL USING MANUFACTURER'S RECOMMENDED ATTACHMENT DETAIL. SEE SHEET M-502 FOR DETAIL.
3. REFER TO STRUCTURAL AND ARCHITECTURAL DRAWINGS FOR PENETRATION DETAILS.
4. PROVIDE BOLTED FLANGED CONNECTION BETWEEN WALL SLEEVE AND TRANSITION INTO ENCLOSURE, SEE ARCHITECTURAL FOR PENETRATION DETAIL. DUCT MUST BE CAPABLE OF BEING REMOVED FROM ENCLOSURE FOR DECOMMISSIONING.
5. DUCT CLEARANCE DIMENSIONS INCLUDE INSULATION.

KEYED NOTES

1. ROOF CONTROL PANEL, REFER TO IC DRAWINGS.
2. HVAC SKID LOCAL CONTROL PANEL, REFER TO IC DRAWINGS.
3. MOUNT BOTTOM OF TRANSFER GRILLE 4 FEET AFF. PROVIDE METAL DUCT SLEEVE BETWEEN TRANSFER GRILLES THROUGH WALL CAVITY. SEE DETAIL ON SHEET M-503.
4. BRANCH DUCT WYE FITTING AT MAX 45° FROM VERTICAL. SUPPORT VERTICAL DUCT IN SHAFT FROM HORIZONTAL FRAMING AT LEVEL 3 FLOOR.
5. INDICATES DIMENSION FROM WALL TO OUTER EDGE OF DUCT INSULATION.

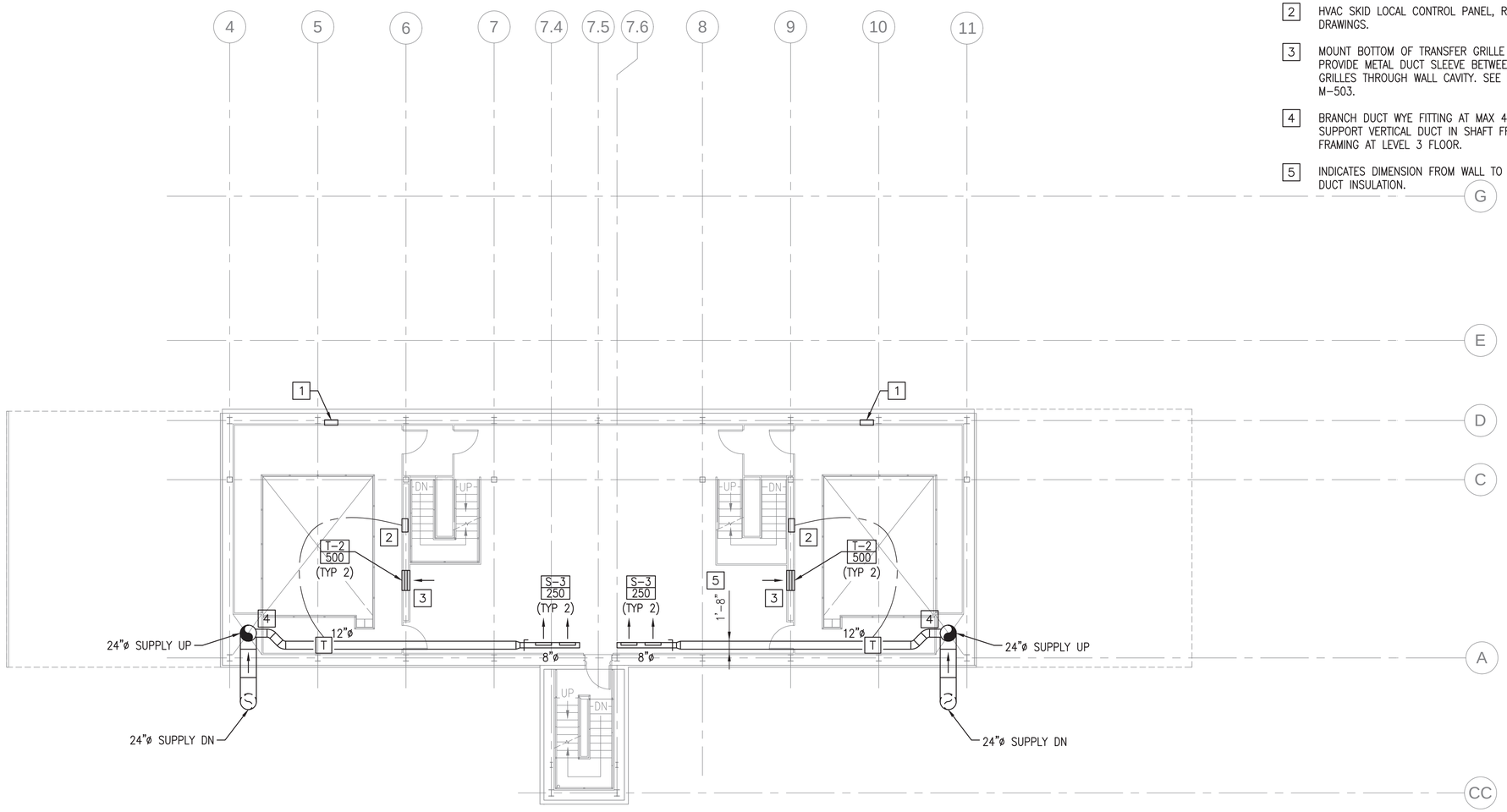

LEVEL 2 MECHANICAL PLAN (NO STORAGE ENCLOSURE)

SCALE: 1/8" = 1'-0"

PLAN NORTH

0 4' 8' 16'
Scale: 1/8" = 1'-0"

SYM	DESCRIPTION	DATE	APPR
0	ISSUED FOR CONSTRUCTION	10/28/2016	CBC

NAVFAC

STATE OF MAINE
PETER W. BROWN
No. 5743
Registered Professional Engineer
10/28/16
SEAL

Colby Company engineering
A/E INFO

APPROVED
Baird W. Grunfeld
FOR COMMANDER NAVFAC

ACTIVITY
TIM FISHER
C. 2370.6 BRANCH HEAD

SATISFACTORY TO DATE 10/28/2016

DES	EAF	DRW	CSS	CHK	PWB

PM/DM PETER STOCKLESS
BRANCH MANAGER IAN BODWELL
FEAD/PM&E AMIN BAHROUR
FIRE PROTECTION PATRICK BAKAJ

DEPARTMENT OF THE NAVY
NAVAL FACILITIES ENGINEERING COMMAND
PUBLIC WORKS DEPARTMENT - MAINE

NAVAL FACILITIES ENGINEERING COMMAND ~ MID-ATLANTIC
NAVAL SHIPYARD - PORTSMOUTH, NH

PORTSMOUTH NAVAL SHIPYARD
KITTERY, ME

DRY DOCK #1 DEFUELING COMPLEX
M-140 COMPLEX

LEVEL 2 MECHANICAL PLAN (NO STORAGE ENCLOSURE)

EPROJECT NO.: 1363311
CONSTR. CONTR. NO. N40085-17-C-5002
NAVFAC DRAWING NO. 12734928
SHEET 145 OF 188

M-102 | DD1-16-1009

DRAWFORM REVISION: 10 OCTOBER 2014

10/28/2016 6:50:19 AM X:\297 PORTSMOUTH NAVAL SHIPYARD\297.005.001 - DD#1 DEFUELING COMPLEX DESIGN\DRAWINGS\M140\SHEETS\M-102.DWG

NOTES

1. SEE SHEET M-001 FOR LEGEND, ABBREVIATIONS AND GENERAL NOTES.
2. SURFACE MOUNT EXPOSED DUCT TIGHT TO PLASCORE CEILING PANEL USING MANUFACTURER'S RECOMMENDED ATTACHMENT DETAIL.
3. THIS DRAWING INCLUDES BID OPTIONS FOR STORAGE ENCLOSURE ONLY. SEE SHEET M-102 FOR CONTINUATION OF MECHANICAL SYSTEMS.

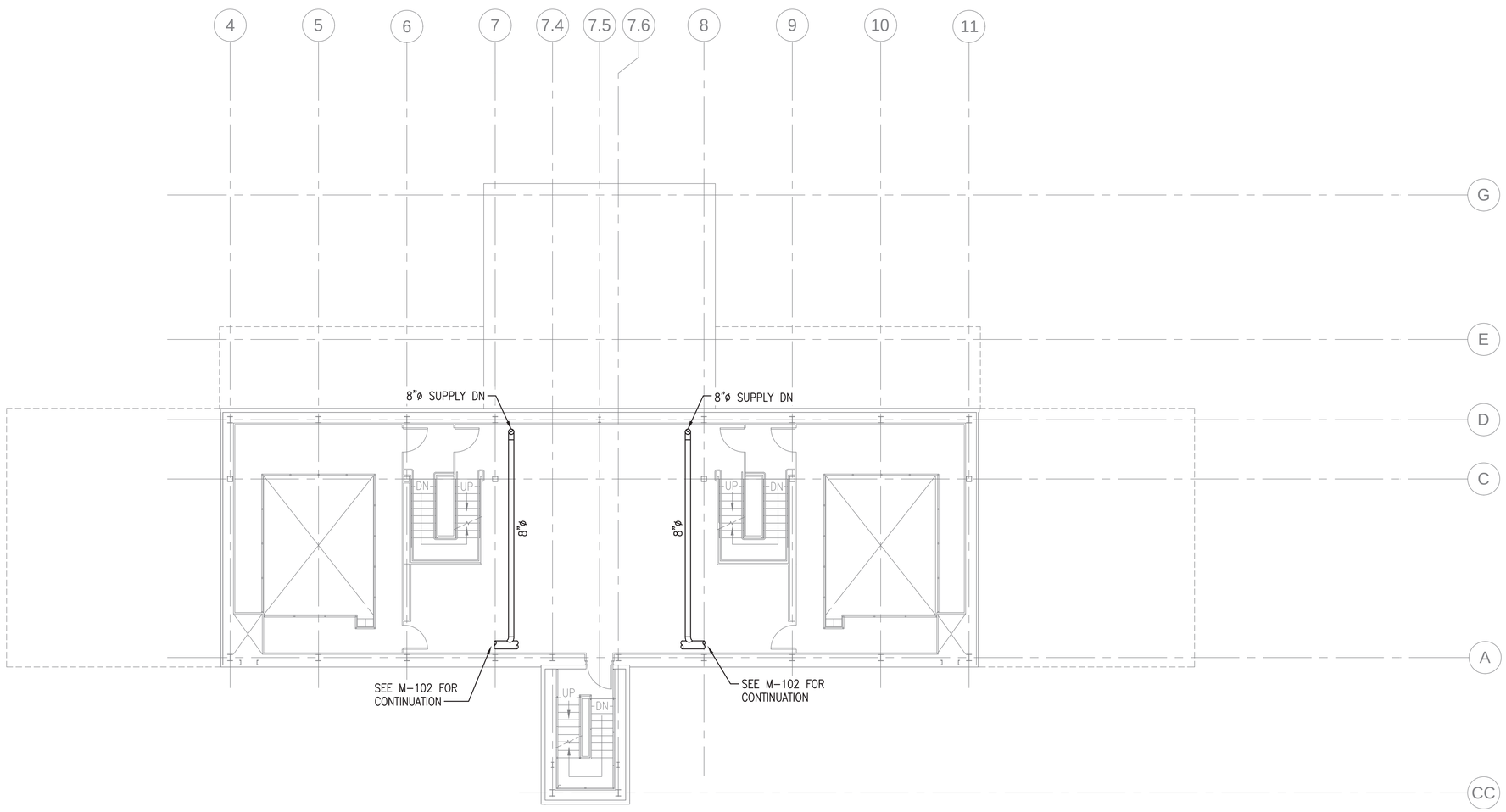

LEVEL 2 MECHANICAL PLAN

SCALE: 1/8" = 1'-0"

PLAN NORTH

0 4' 8' 16'
Scale: 1/8" = 1'-0"

SYM	DESCRIPTION	DATE	APPR
0	ISSUED FOR CONSTRUCTION	10/28/2016	CBC

NAVFAC

STATE OF MAINE
PETER W. BROWN
No. 5743
PROFESSIONAL ENGINEER
10/28/16
SEAL

Colby Company engineering
A/E INFO

APPROVED
Baird W. Grunfeld
FOR COMMANDER NAVFAC

ACTIVITY
TIM FISHER
C. 2370.6 BRANCH HEAD

SATISFACTORY TO DATE 10/28/2016

DES	EAF	DRW CSS	CHK PWB

PMDM	PETER STOCKLESS
BRANCH MANAGER	IAN BODWELL
FEAD/PM&E	AMIN BAHROUR
FIRE PROTECTION	PATRICK BAKAJ

DEPARTMENT OF THE NAVY
NAVAL FACILITIES ENGINEERING COMMAND
PUBLIC WORKS DEPARTMENT - MAINE

NAVAL FACILITIES ENGINEERING COMMAND ~ MID-ATLANTIC
NAVAL SHIPYARD - PORTSMOUTH, NH

PORTSMOUTH NAVAL SHIPYARD
DRY DOCK #1 DEFUELING COMPLEX
KITTERY, ME
M-140 COMPLEX

LEVEL 2 MECHANICAL PLAN

EPROJECT NO.: 1363311

CONSTR. CONTR. NO.
N40085-17-C-5002

NAVFAC DRAWING NO.
12734929

SHEET 146 OF 188

M-102A | DD1-16-1010

DRAWFORM REVISION: 10 OCTOBER 2014

10/28/2016 6:50:23 AM X:\297 PORTSMOUTH NAVAL SHIPYARD\297.005.001 - DD#1 DEFUELING COMPLEX DESIGN\DRAWINGS\M140\SHEETS\M-102A.DWG

NOTES

1. SEE SHEET M-001 FOR LEGEND, ABBREVIATIONS AND GENERAL NOTES.

KEYED NOTES

1. BOTTOM OF 24"ø SUPPLY DUCT INSTALLED AT 45' LEVEL. INSTALL DIFFUSERS ANGLED DOWNWARD 45° FROM HORIZONTAL. ORIFICE PLATES TO BE SIZED BY MANUFACTURER TO ENSURE PERPENDICULAR DISCHARGE. SUPPORT DUCT HEADER WITH CANTILEVERED BRACKETS PER SMACNA CHAPTER 15 HANGER SUPPORTS.
2. HANG AND SUPPORT UNIT HEATER FROM STRUCTURE ABOVE AT 8' AFF. WITH MANUFACTURER'S MOUNTING BRACKET.

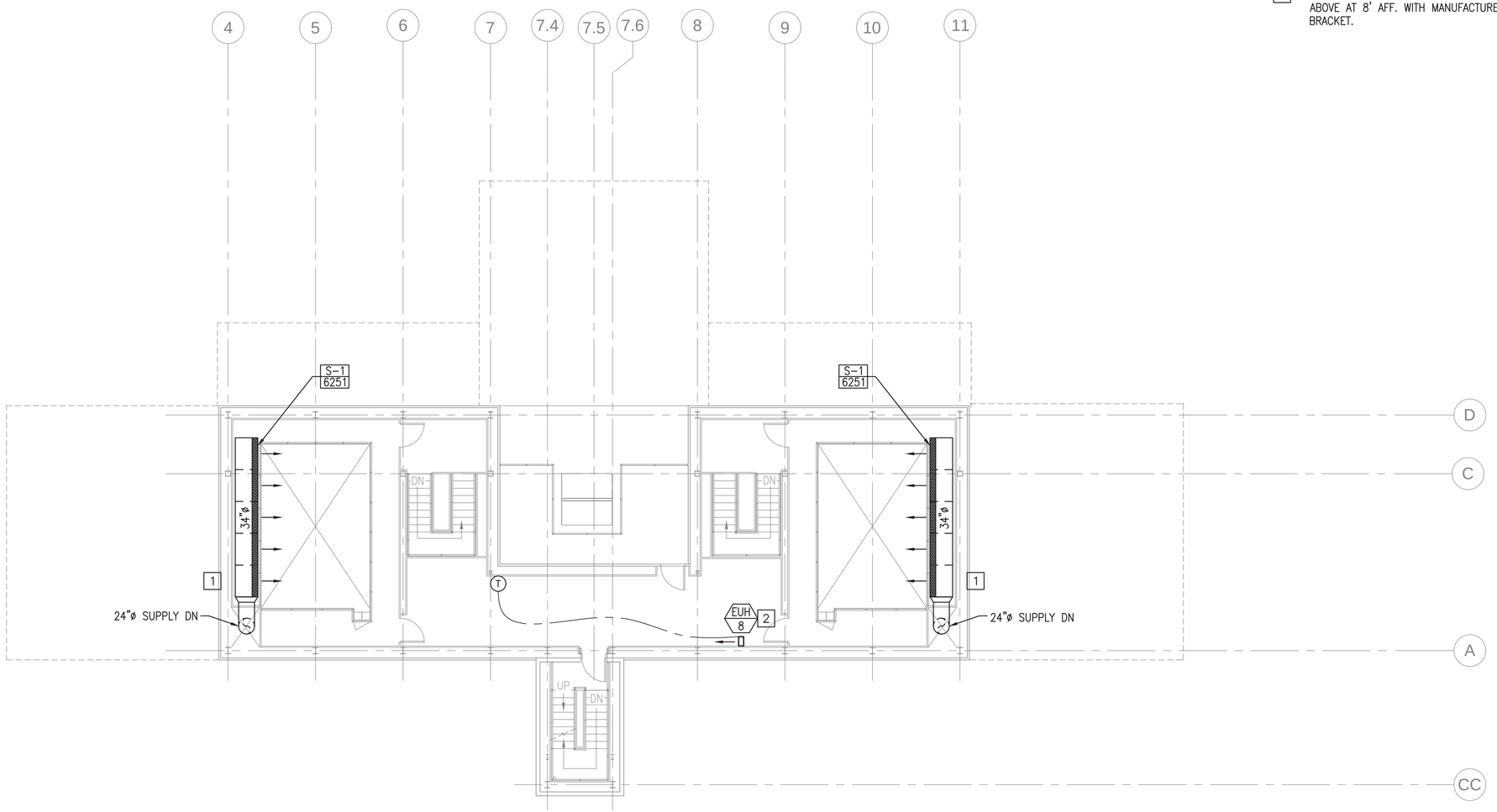

LEVEL 3 MECHANICAL PLAN

SCALE: 1/8" = 1'-0"

PLAN NORTH

Scale: 1/8" = 1'-0"

SYM	DESCRIPTION	DATE	APPR
0	ISSUED FOR CONSTRUCTION	10/28/2016	CBC

NAVFAC

STATE OF MAINE
PETER W. BROWN
No. 5743
REGISTERED PROFESSIONAL ENGINEER
10/28/16
SEAL

Colby Company engineering
A/E INFO

APPROVED
Baird W. Grunfeld
FOR COMMANDER NAVFAC

ACTIVITY
TIM FISHER
C. 2370.6 BRANCH HEAD

SATISFACTORY TO DATE 10/28/2016

DES EAF DRW CSS CHK PWB

PMDM PETER STOCKLESS

BRANCH MANAGER IAN BODWELL

FEA/PM&E AMIN BAHROUR

FIRE PROTECTION PATRICK BAKAJ

DEPARTMENT OF THE NAVY
NAVAL FACILITIES ENGINEERING COMMAND
PUBLIC WORKS DEPARTMENT - MAINE

NAVAL FACILITIES ENGINEERING COMMAND ~ MID-ATLANTIC
NAVAL SHIPYARD - PORTSMOUTH, NH

PORTSMOUTH NAVAL SHIPYARD
DRY DOCK #1 DEFUELING COMPLEX
KITTERY, ME
M-140 COMPLEX

LEVEL 3 MECHANICAL PLAN

EPROJECT NO.: 1363311

CONSTR. CONTR. NO.
N40085-17-C-5002

NAVFAC DRAWING NO.
12734930

SHEET 147 OF 188

M-103 | DD1-16-1011

DRAWFORM REVISION: 10 OCTOBER 2014

10/28/2016 6:50:27 AM X:\297 PORTSMOUTH NAVAL SHIPYARD\297.005.001 - DD#1 DEFUELING COMPLEX DESIGN\DRAWINGS\M140\SHEETS\M-103.DWG

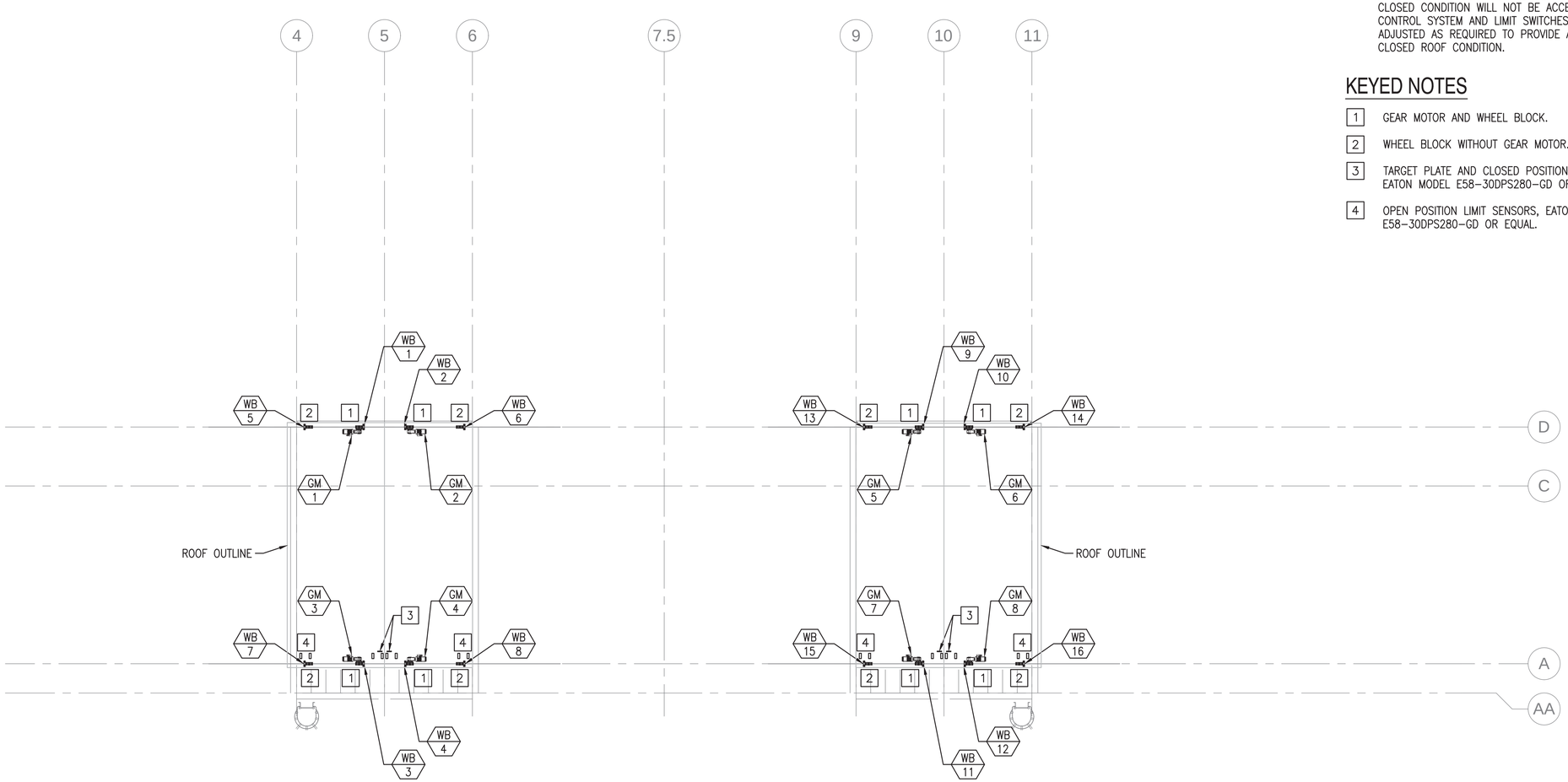

BOTTOM OF ROOF MECHANICAL PLAN

SCALE: 1/8" = 1'-0"

PLAN NORTH

0 4' 8' 16'
Scale: 1/8" = 1'-0"

NOTES

1. SEE SHEET M-001 FOR LEGEND, ABBREVIATIONS AND GENERAL NOTES.
2. COORDINATE WITH IC AND STRUCTURAL DRAWINGS FOR CONTROLS, TARGET PLATES AND MOUNTING BRACKETS.
3. THE CONTRACTOR SHALL VERIFY THE MOTOR SIZING WITH THE MANUFACTURER BASED ON THE ANTICIPATED WEIGHT OF THE ROOF ASSEMBLY. ALL WHEEL BLOCKS AND MOTORS SHALL BE COORDINATED WITH THE STRUCTURAL AND ARCHITECTURAL SUBCONTRACTORS TO ENSURE A COORDINATED SYSTEM. THE ROOF SHALL OPEN AND CLOSE TO THE EXTENTS AS SHOWN ON THE ARCHITECTURAL DRAWINGS. THE ROOF SHALL CLOSE AND PROVIDE A COMPLETE WEATHER SEAL AT ALL SEAMS INCLUDING THE INTERFACE WHERE THE ROOF SECTIONS MEET. THE ROOF CONTROL SYSTEM SHALL CONTROL THE MOTORS THOUGH THE LIMIT SWITCHES TO PROVIDE A SMOOTH STOP AND CLOSE AS THE ROOF SECTIONS MEET, ROOF SECTIONS BUMPING AND SEPARATING AT THE CLOSED CONDITION WILL NOT BE ACCEPTABLE. THE CONTROL SYSTEM AND LIMIT SWITCHES SHALL BE ADJUSTED AS REQUIRED TO PROVIDE A COMPLETE CLOSED ROOF CONDITION.

KEYED NOTES

1. GEAR MOTOR AND WHEEL BLOCK.
2. WHEEL BLOCK WITHOUT GEAR MOTOR.
3. TARGET PLATE AND CLOSED POSITION LIMIT SENSOR, EATON MODEL E58-30DPS280-GD OR EQUAL.
4. OPEN POSITION LIMIT SENSORS, EATON MODEL E58-30DPS280-GD OR EQUAL.

SYM	DESCRIPTION	DATE	APPR
0	ISSUED FOR CONSTRUCTION	10/28/2016	CBC

NAVFAC

STATE OF MAINE
PETER W. BROWN
No. 5743
REGISTERED PROFESSIONAL ENGINEER
10/28/16
SEAL

Colby Company engineering

A/E INFO

APPROVED
David W. Thurnfeld
FOR COMMANDER NAVFAC

ACTIVITY
TIM FISHER
C. 2370.6 BRANCH HEAD

SATISFACTORY TO DATE 10/28/2016

DES EAF | DRW CSS | CHK PWB

PMDM PETER STOCKLESS
BRANCH MANAGER IAN BODWELL
FEAD/PM&E AMIN BAHROUR
FIRE PROTECTION PATRICK BAKAJ

DEPARTMENT OF THE NAVY
NAVAL FACILITIES ENGINEERING COMMAND
PUBLIC WORKS DEPARTMENT - MAINE

NAVAL FACILITIES ENGINEERING COMMAND ~ MID-ATLANTIC
NAVAL SHIPYARD - PORTSMOUTH, NH

PORTSMOUTH NAVAL SHIPYARD
KITTERY, ME

DRY DOCK #1 DEFUELING COMPLEX
M-140 COMPLEX

BOTTOM OF ROOF MECHANICAL PLAN

EPROJECT NO.: 1363311

CONSTR. CONTR. NO.
N40085-17-C-5002

NAVFAC DRAWING NO.
12734931

SHEET 148 OF 188

M-104 | DD1-16-1012

DRAWFORM REVISION: 10 OCTOBER 2014

10/28/2016 6:50:32 AM X:\297 PORTSMOUTH NAVAL SHIPYARD\297.005.001 - DD#1 DEFUELING COMPLEX DESIGN\DRAWINGS\M140\SHEETS\M-104.DWG

NOTES

1. SEE SHEET M-001 FOR LEGEND, ABBREVIATIONS AND GENERAL NOTES.
2. COORDINATE WITH STRUCTURAL FOR VERTICAL DUCT SUPPORTS, SEE SHEETS S-410 AND S-521.

KEYED NOTES

1. 3" GALVANIZED PIPE SUPPORT WITH DUCT SADDLE AND 6"X6" BASE PLATE BOLTED TO CONCRETE. SEE SHEET M-502 FOR DETAIL.
2. 20" RA DAMPER BEHIND, SEE M-100.

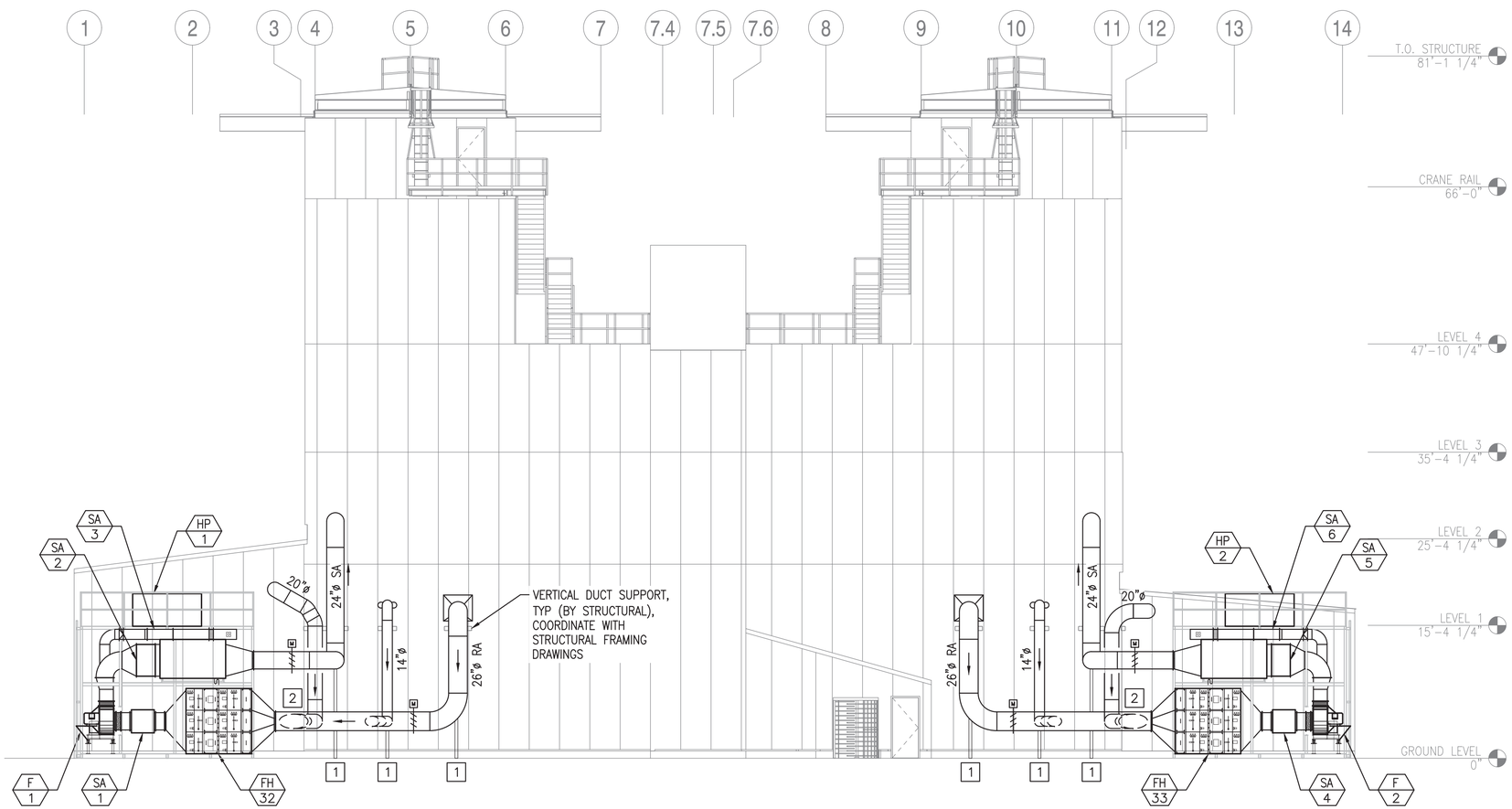

SOUTH MECHANICAL ELEVATION

SCALE: 1/8" = 1'-0"

M-100 A1

Scale: 1/8" = 1'-0"

SYM	DESCRIPTION	DATE	APPR
0	ISSUED FOR CONSTRUCTION	10/28/2016	CBC

NAVFAC

STATE OF MAINE
PETER W. BROWN
No. 5743
PROFESSIONAL ENGINEER
10/28/16 SEAL

Colby Company engineering
A/E INFO

APPROVED
David W. Thurnfield
FOR COMMANDER NAVFAC

ACTIVITY
TIM FISHER
C. 2370.6 BRANCH HEAD

SATISFACTORY TO DATE 10/28/2016

DES EAF DRW CSS CHK PWB

PMDM PETER STOCKLESS
BRANCH MANAGER IAN BODWELL
FEAD/PMAE AMIN BAHROUR
FIRE PROTECTION PATRICK BAKAJ

DEPARTMENT OF THE NAVY
NAVAL FACILITIES ENGINEERING COMMAND
PUBLIC WORKS DEPARTMENT - MAINE

NAVAL FACILITIES ENGINEERING COMMAND ~ MID-ATLANTIC
NAVAL SHIPYARD - PORTSMOUTH, NH

PORTSMOUTH NAVAL SHIPYARD
KITTERY, ME

DRY DOCK #1 DEFUELING COMPLEX
M-140 COMPLEX

MECHANICAL ELEVATION

EPROJECT NO.: 1363311

CONSTR. CONTR. NO.
N40085-17-C-5002

NAVFAC DRAWING NO.
12734932

SHEET 149 OF 188

M-201 DD1-16-1013

DRAWFORM REVISION: 10 OCTOBER 2014

10/28/2016 6:50:39 AM X:\297 PORTSMOUTH NAVAL SHIPYARD\297.005.001 - DD#1 DEFUELING COMPLEX DESIGN\DRAWINGS\M140\SHEETS\M-201.DWG

NOTES

1. SEE SHEET M-001 FOR LEGEND, ABBREVIATIONS AND GENERAL NOTES.

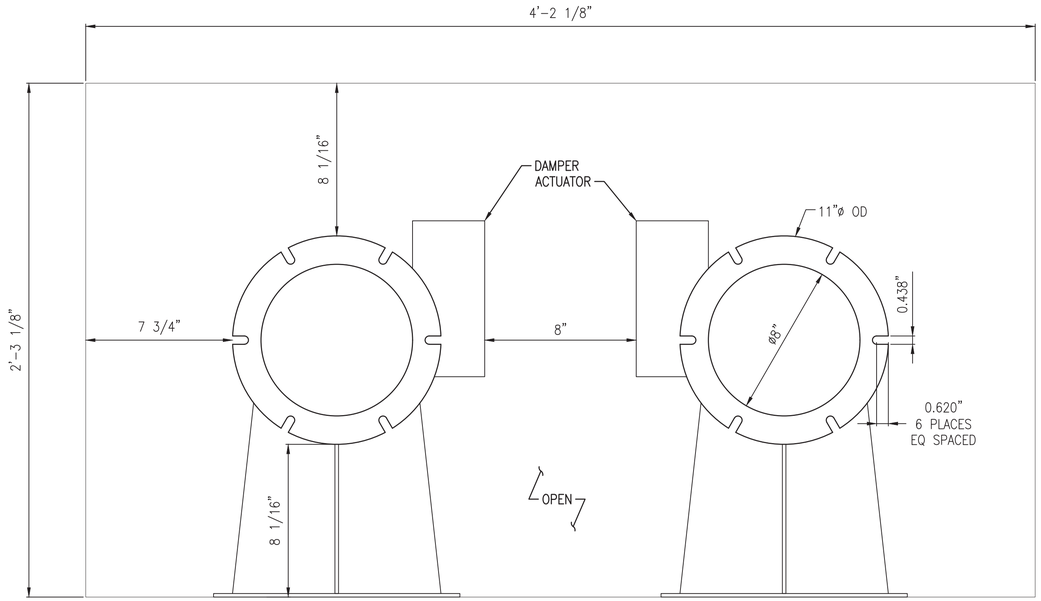

FRONT VIEW

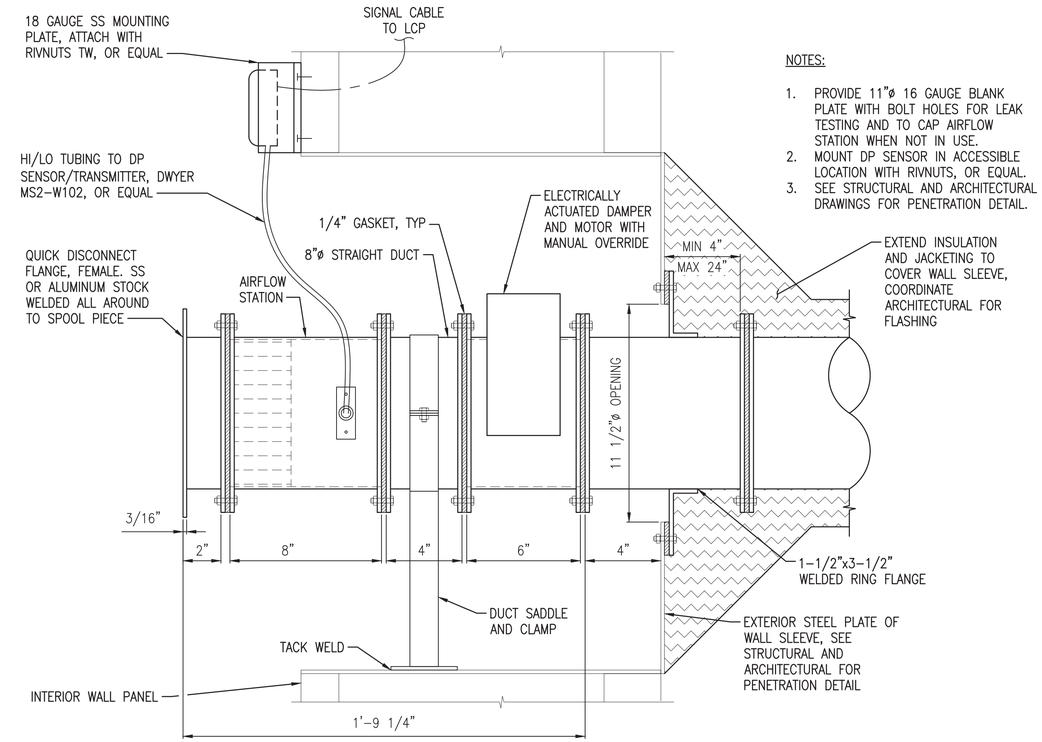

NOTES:

1. PROVIDE 11"ø 16 GAUGE BLANK PLATE WITH BOLT HOLES FOR LEAK TESTING AND TO CAP AIRFLOW STATION WHEN NOT IN USE.
2. MOUNT DP SENSOR IN ACCESSIBLE LOCATION WITH RIVNUTS, OR EQUAL.
3. SEE STRUCTURAL AND ARCHITECTURAL DRAWINGS FOR PENETRATION DETAIL.

SIDE VIEW

ENGINEERED VENTILATION ASSEMBLY (C1)

SCALE: 3" = 1'-0" M-101

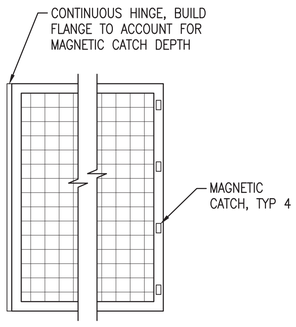

PASSAGEWAY ELEVATION

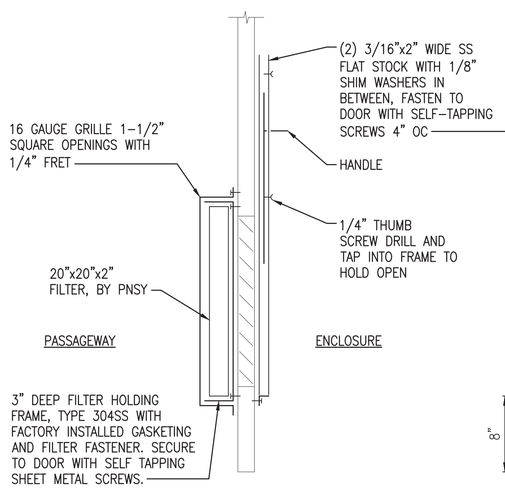

SECTION

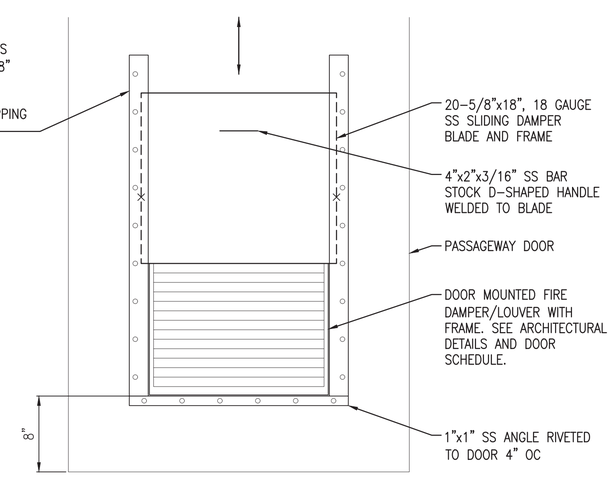

INTERIOR ELEVATION

PASSAGEWAY DOOR DAMPER DETAIL (A1)

SCALE: 1/2" = 1'-0" M-101, M-101A

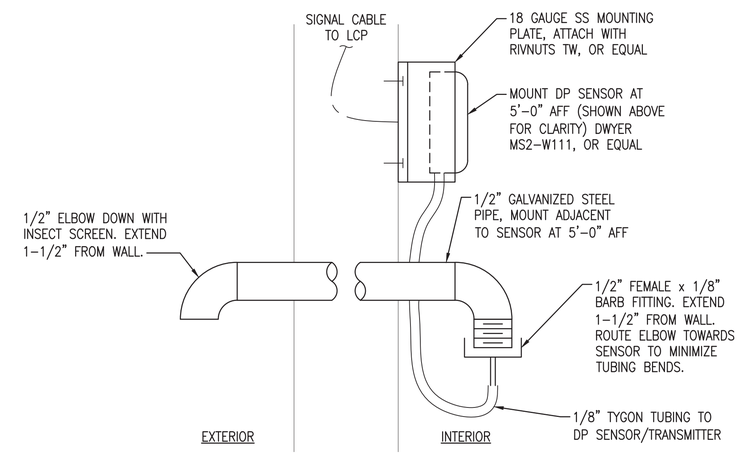

NOTES:

1. SEE ARCHITECTURAL DETAILS FOR SEALING REQUIREMENTS.
2. PENETRATION TO BE CUT BY INTERIOR WALL PANEL INSTALLERS, COORDINATE LOCATION ACCORDINGLY.

DIFFERENTIAL PRESSURE PORT DETAIL (A4)

SCALE: NTS M-101, M-101A

Scale: 3" = 1'-0" (0, 3", 6", 9")

Scale: 1/2" = 1'-0" (0, 1', 2', 4')

SYM	DESCRIPTION	DATE	APPR
0	ISSUED FOR CONSTRUCTION	10/28/2016	CBC

NAVFAC

STATE OF MAINE PETER W. BROWN No. 5743 PROFESSIONAL ENGINEER 10/28/16 SEAL

Colby Company engineering

A/E INFO

APPROVED David W. Thurnfield

FOR COMMANDER NAVFAC

ACTIVITY: TIM FISHER, C. 2370.6 BRANCH HEAD

SATISFACTORY TO DATE 10/28/2016

DES EAF DRW CSS CHK PWB

PMDM PETER STOCKLESS

BRANCH MANAGER IAN BODWELL

FEA/PM&E AMIN BAHROUR

FIRE PROTECTION PATRICK BAKAJ

DEPARTMENT OF THE NAVY
NAVAL FACILITIES ENGINEERING COMMAND
PUBLIC WORKS DEPARTMENT - MAINE

NAVAL FACILITIES ENGINEERING COMMAND ~ MID-ATLANTIC
NAVAL SHIPYARD - PORTSMOUTH, NH

PORTSMOUTH NAVAL SHIPYARD
KITTERY, ME

DRY DOCK #1 DEFUELING COMPLEX
M-140 COMPLEX

MECHANICAL DETAILS

EPROJECT NO.: 1363311

CONSTR. CONTR. NO. N40085-17-C-5002

NAVFAC DRAWING NO. 12734933

SHEET 150 OF 188

M-501 | DD1-16-1014

DRAWFORM REVISION: 10 OCTOBER 2014

10/28/2016 6:50:44 AM X:\297 PORTSMOUTH NAVAL SHIPYARD\297.005.001 - DD#1 DEFUELING COMPLEX DESIGN\DRAWINGS\M140\SHEETS\M-501.DWG

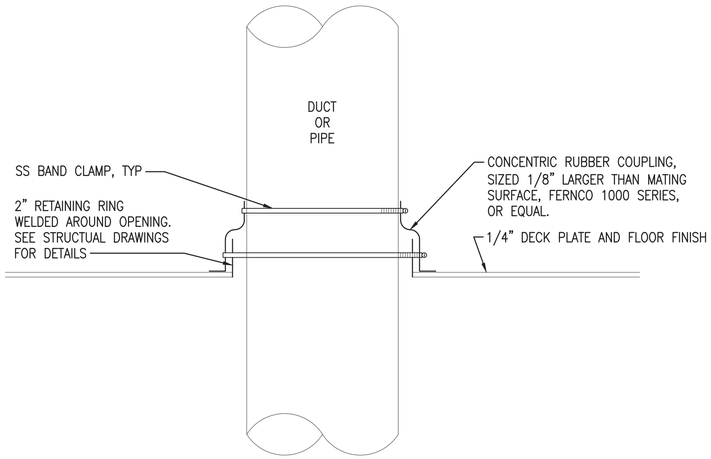

NOTES:

1. SECURE RUBBER COUPLING TIGHT TO FINISHED FLOOR.
2. COORDINATE WITH STRUCTURAL FOR FLOOR PENETRATIONS.
3. SECURE SEAL AFTER FINISHED FLOOR IS COMPLETE.

FLOOR PENETRATION SEALING DETAIL (C1)

SCALE: 3" = 1'-0"

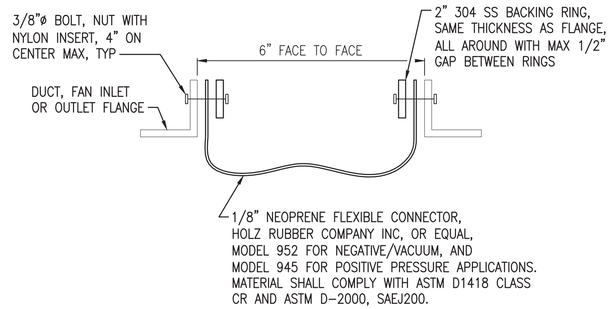

DUCT FLEX CONNECTOR DETAIL (D3)

SCALE: NTS

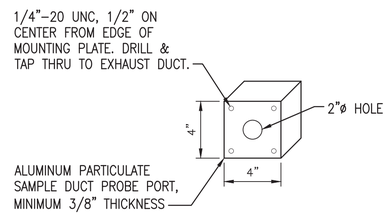

PARTICULATE SAMPLE PROBE MOUNTING PLATE DETAIL (C3)

SCALE: NTS

NOTES

1. SEE SHEET M-001 FOR LEGEND, ABBREVIATIONS AND GENERAL NOTES.

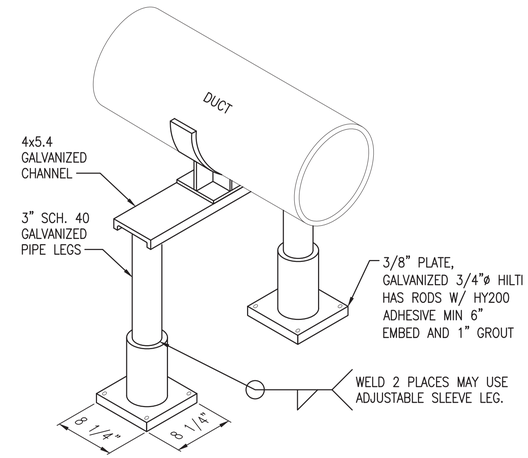

EXTERIOR DUCT SADDLE SUPPORT DETAIL (C4)

SCALE: NTS

M-201

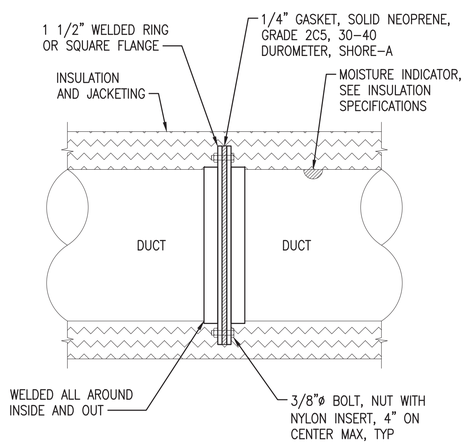

NOTES:

1. INSTALL FLANGED CONNECTIONS AT ALL ENCLOSURE PENETRATIONS WITH 4" ACCESS TO BOLTS.
2. PROVIDE STRIP OF WEATHERPROOF AND UV RESISTANT GREEN TAPE ON EXTERIOR OF INSULATION TO INDICATE FLANGE LOCATIONS. INDICATE "FLANGE LOCATION" WITH WEATHERPROOF LABEL OR TAG.

TYPICAL DUCT FLANGE DETAIL (A1)

SCALE: 3" = 1'-0"

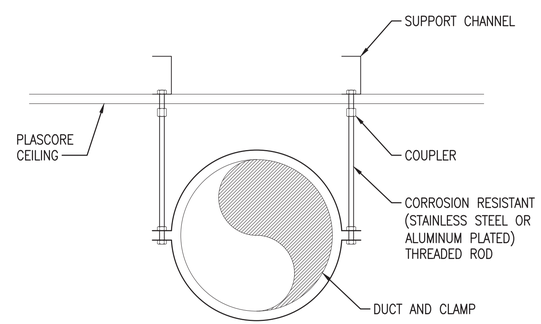

NOTES:

1. COORDINATE WITH STRUCTURAL TO LOCATE DUCT HANGERS AND SUPPORT CHANNELS PRIOR TO CEILING INSTALL.
2. INSTALL THREADED ROD STUDS TO ALLOW FOR INSTALLATION OF CEILING AND CEILING PENETRATIONS. INSTALL DUCT AND HANGERS AFTER CEILING COMPLETION AND SEAL.
3. DUCT CLAMP MATERIAL SHALL BE COATED OR MATERIAL TO MATCH DUCT TO PREVENT CORROSION.
4. WRAP DUCT INSULATION AROUND DUCT CLAMPS.

DUCT HANGER DETAIL (A3)

SCALE: NTS

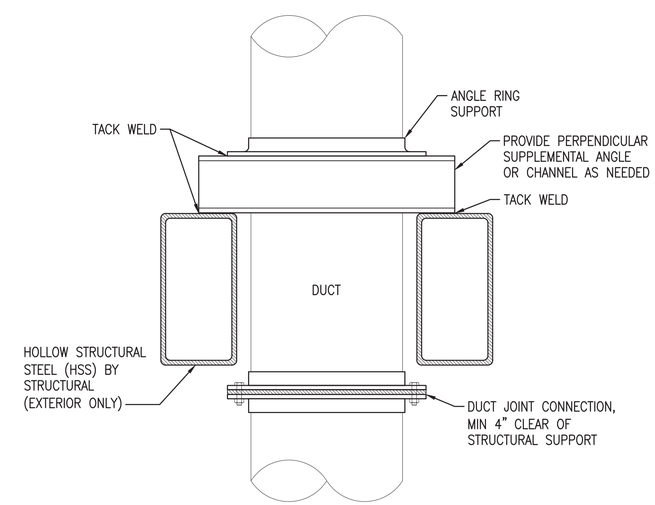

DUCT RISER SUPPORT DETAIL (A4)

SCALE: 3" = 1'-0"

0 3" 6" 9"
Scale: 3" = 1'-0"

SYM	DESCRIPTION	DATE	APPR
0	ISSUED FOR CONSTRUCTION	10/28/2016	CBC

NAVFAC

STATE OF MAINE
PETER W. BROWN
No. 5743
PROFESSIONAL ENGINEER
10/28/16
SEAL

Colby Company engineering
A/E INFO

APPROVED: David W. Drumfield
FOR COMMANDER NAVFAC
ACTIVITY: TIM FISHER, C. 2370.6 BRANCH HEAD
SATISFACTORY TO DATE 10/28/2016
DES EAF | DRW CSS | CHK PWB
PM/DM PETER STOCKLESS
BRANCH MANAGER IAN BODWELL
FEA/PM&E AMIN BAHROUR
FIRE PROTECTION PATRICK BAKAJ

DEPARTMENT OF THE NAVY
NAVAL FACILITIES ENGINEERING COMMAND
PUBLIC WORKS DEPARTMENT - MAINE
NAVAL FACILITIES ENGINEERING COMMAND ~ MID-ATLANTIC
NAVAL SHIPYARD - PORTSMOUTH, NH
PORTSMOUTH NAVAL SHIPYARD
KITTERY, ME
DRY DOCK #1 DEFUELING COMPLEX
M-140 COMPLEX
MECHANICAL DETAILS

EPROJECT NO.: 1363311
CONSTR. CONTR. NO. N40085-17-C-5002
NAVFAC DRAWING NO. 12734934
SHEET 151 OF 188
M-502 | DD1-16-1015

DRAWFORM REVISION: 10 OCTOBER 2014

10/28/2016 6:50:51 AM X:\297 PORTSMOUTH NAVAL SHIPYARD\297.005.001 - DD#1 DEFUELING COMPLEX DESIGN\DRAWINGS\M140\SHEETS\M-502.DWG

KEYED NOTES

1. ONLY ONE COIL REFRIGERANT ENTRY AND EXIT CIRCUIT IS SHOWN. SYSTEM HAS MULTIPLE ENTRY AND EXIT CIRCUITS.
2. INSTALL APR VALVE AND ISOLATION VALVES IN FIELD IN ACCORDANCE WITH MANUFACTURER'S INSTALLATION RECOMMENDATION (NOT SHOWN FOR CLARITY).

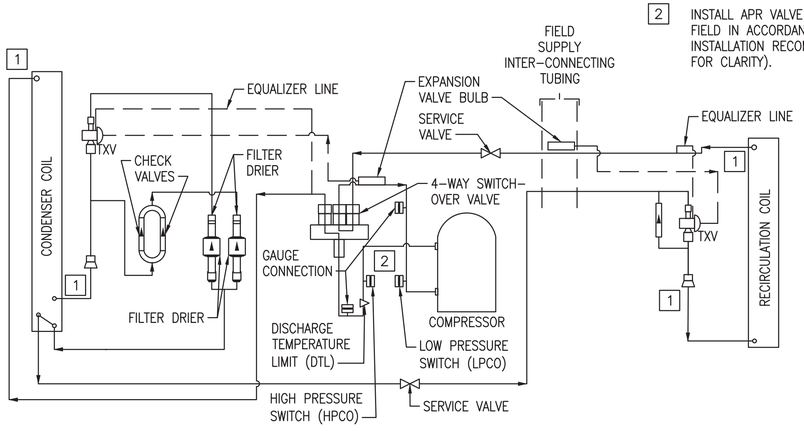

HEAT PUMP REFRIGERANT PIPING DETAIL (C2)

SCALE: NTS

NOTES

1. SEE SHEET M-001 FOR LEGEND, ABBREVIATIONS AND GENERAL NOTES.

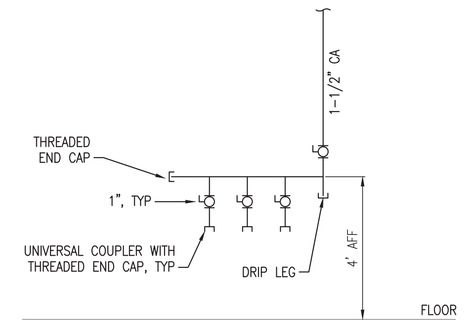

COMPRESSED AIR MANIFOLD DETAIL (D4)

SCALE: NTS — M-100, M-101, M-101A

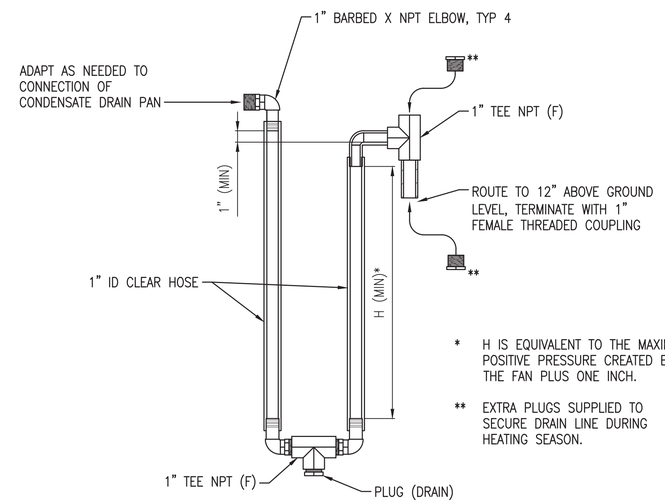

* H IS EQUIVALENT TO THE MAXIMUM POSITIVE PRESSURE CREATED BY THE FAN PLUS ONE INCH.

** EXTRA PLUGS SUPPLIED TO SECURE DRAIN LINE DURING HEATING SEASON.

NOTES:

1. THE GENERAL DIMENSIONS SHOWN ARE INTENDED TO ENSURE THE WATER LEVEL IS ALWAYS PRESENT IN THE CLEAR TUBING ON THE UPSTREAM SIDE OF THE BOTTOM FITTINGS.
2. NOT SHOWN: A SUPPORT PLATE OR ADJACENT STRUCTURE UPON WHICH TO SECURE THE TUBING AND FITTINGS.
3. THE PRIMING TEE IS USED TO PROVIDE AN EASY WAY TO FILL THE LOOP BY TEMPORARILY BLOCKING THE LOWER OPENING AND POURING WATER INTO THE TOP OPENING.
4. LOCATE TRAP WHERE IT CAN BE INSPECTED FOR DEBRIS AND WATER SEAL.
5. MATERIAL SHALL BE UV AND CORROSION RESISTANT.

BLOW-THROUGH CONDENSATE DRAIN LOOP ("P" TRAP) DETAIL (A4)

SCALE: NTS — M-505

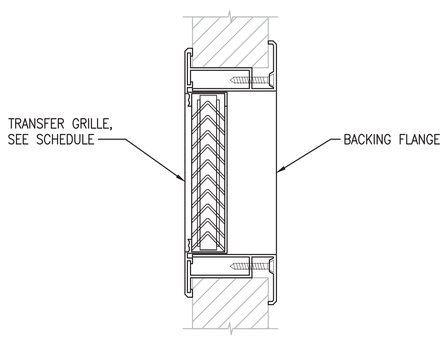

NOTE:

1. PENETRATION TO BE CUT BY INTERIOR WALL PANEL INSTALLERS, COORDINATE LOCATION AND SIZE ACCORDINGLY.

TRANSFER GRILLE DETAIL (A1)

SCALE: NTS

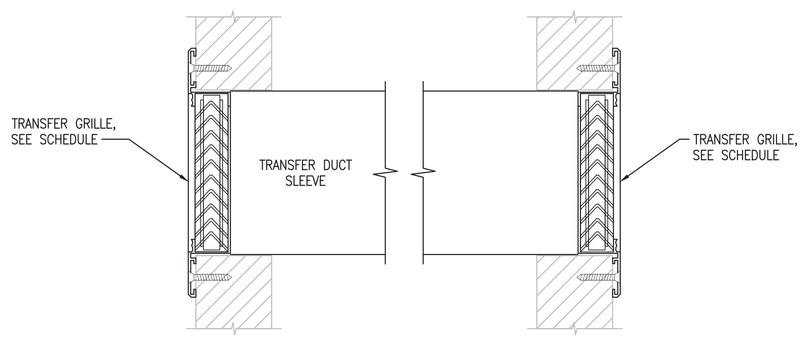

NOTE:

1. PENETRATION TO BE CUT BY INTERIOR WALL PANEL INSTALLERS, COORDINATE LOCATION AND SIZE ACCORDINGLY.
2. SECURE DUCT SLEEVE TO WALL PANEL WITH BENT UP FLANGE ON ONE END, PLAIN END ON THE OTHER TO FACILITATE RIGID INSTALLATION.

TRANSFER GRILLE THRU WALL DETAIL (A3)

SCALE: NTS — M-102

SYM	DESCRIPTION	DATE	APPR
0	ISSUED FOR CONSTRUCTION	10/28/2016	CBC

NAVFAC

STATE OF MAINE — PETER W. BROWN No. 5743 — PROFESSIONAL ENGINEER — 10/28/16

Colby Company engineering

APPROVED: David W. Grunfeld — FOR COMMANDER NAVFAC

ACTIVITY: TIM FISHER, C. 2370.6 BRANCH HEAD

SATISFACTORY TO DATE 10/28/2016

DES EAF | DRW CSS | CHK PWB

PM/CM: PETER STOCKLESS

BRANCH MANAGER: IAN BODWELL

FEA/DPM&E: AMIN BAHROUR

FIRE PROTECTION: PATRICK BAKAJ

DEPARTMENT OF THE NAVY — NAVAL FACILITIES ENGINEERING COMMAND — PUBLIC WORKS DEPARTMENT - MAINE

NAVAL FACILITIES ENGINEERING COMMAND ~ MID-ATLANTIC — NAVAL SHIPYARD - PORTSMOUTH, NH

PORTSMOUTH NAVAL SHIPYARD — KITTERY, ME

DRY DOCK #1 DEFUELING COMPLEX

M-140 COMPLEX

MECHANICAL DETAILS

EPROJECT NO.: 1363311

CONSTR. CONTR. NO.: N40085-17-C-5002

NAVFAC DRAWING NO.: 12734935

SHEET 152 OF 188

M-503 | DD1-16-1016

DRAWFORM REVISION: 10 OCTOBER 2014

10/28/2016 6:50:57 AM X:\297 PORTSMOUTH NAVAL SHIPYARD\297.005.001 - DD#1 DEFUELING COMPLEX DESIGN\DRAWINGS\M140\SHEETS\M-503.DWG

NOTES

1. SEE SHEET M-001 FOR LEGEND, ABBREVIATIONS AND GENERAL NOTES.
2. THE HVAC SYSTEMS OF THE TWO M-140 TOWERS, M-140-3 AND M-140-4, ARE CONFIGURED THE SAME. ONLY ONE TOWER IS SHOWN FOR CLARITY.
3. THIS IS A CONCEPTUAL SCHEMATIC, REFER TO SPECIFICATIONS AND EQUIPMENT SCHEDULES FOR DETAILS.

DUCT LEGEND

— — — LEVEL 2 DUCT CONSTRUCTION PER DOE HDBK 1169-2003

———— LEVEL 4 DUCT CONSTRUCTION PER DOE HDBK 1169-2003

— · — · — SMACNA LEVEL DUCT CONSTRUCTION PER HVAC DUCT CONSTRUCTION STANDARD

KEYED NOTES

1. 3X2 HEPA FILTER HOUSING. 2" PRE-FILTER, 12" HEPA FILTER.
2. DX HEAT PUMP AND COIL.
3. ELECTRIC BACKUP HEATING COIL.
4. FAN.
5. DIFFERENTIAL PRESSURE PORT WITH SENSOR FOR SPACE PRESSURE MONITORING. 3 TOTAL, 2 SHOWN.
6. ELECTRICALLY ACTUATED, ADJUSTABLE DAMPER FOR BALANCING FLOW.
7. ROUND WELDED DUCTWORK.
8. DUCT AND DIFFUSERS, DOWNWARD AIRFLOW 45' LEVEL.
9. MANUALLY OPERATED BLAST GATE FOR TRANSFER AIR FROM PASSAGEWAY DOORS. QUANTITY 2 DOORS, 1 SHOWN FOR CLARITY.
10. UNIT HEATER FOR RAILCAR ENCLOSURE, TYP 7.
11. FLUSH-MOUNTED RETURN AIR GRILLE. MAX AIRFLOW SHOWN WHEN ENGINEERED VENTS ARE CLOSED.
12. 8" VENT HOSE FOR ENGINEERED VENTILATION, BY PNSY.
13. ENGINEERED VENT WITH QUICK DISCONNECT, MOTORIZED DAMPERS AND FLOW METER FOR ATTACHMENT OF FLEXIBLE DUCT.
14. MOTORIZED DAMPER FOR NEGATIVE DP CONTROL SET BY USER THRU LCP, EXHAUSTS TO ATMOSPHERE.
15. VARIABLE-AREA FLOW METER AND VALVE FOR AIR SAMPLING FLOW CONTROL, DWYER RMC RATE-MASTER. 120V POWER OUTLET FOR HEAT TRACE, REFER TO HVAC SKID SPECIFICATIONS. CONNECT TUBING WITH 1/4" WELDED HALF COUPLING AND HOSE BARB.
16. DIFFERENTIAL PRESSURE GAUGES, REMOTELY MOUNTED ON GAUGE PANEL (NOT SHOWN).
17. DUCT SILENCER.
18. PARTICULATE SAMPLE DUCT PROBE PORT, SEE C3/M-502. PROVIDE 1/4" TYGON UV RESISTANT, VACUUM RATED TUBING (OR EQUAL) TO FAN INLET.
19. AIRFLOW MEASURING STATION, DIGITAL DISPLAY AT LCP, LOCAL GAUGES AT GAUGE PANEL (NOT SHOWN). INTEGRAL WITH SILENCER ON FAN INLET ONLY.
20. DUCT DIFFUSERS, SPACE CONDITIONING.
21. BUBBLE-TIGHT ELECTRICALLY-ACTUATED ADJUSTABLE DAMPER.
22. FLOW PROVING PRESSURE SWITCH, DWYER 616W-4 OR EQUAL. CONNECT TUBING WITH 1/4" WELDED HALF COUPLING AND HOSE BARB.
23. STRUCTURAL STEEL SKID TO HOUSE HVAC EQUIPMENT.

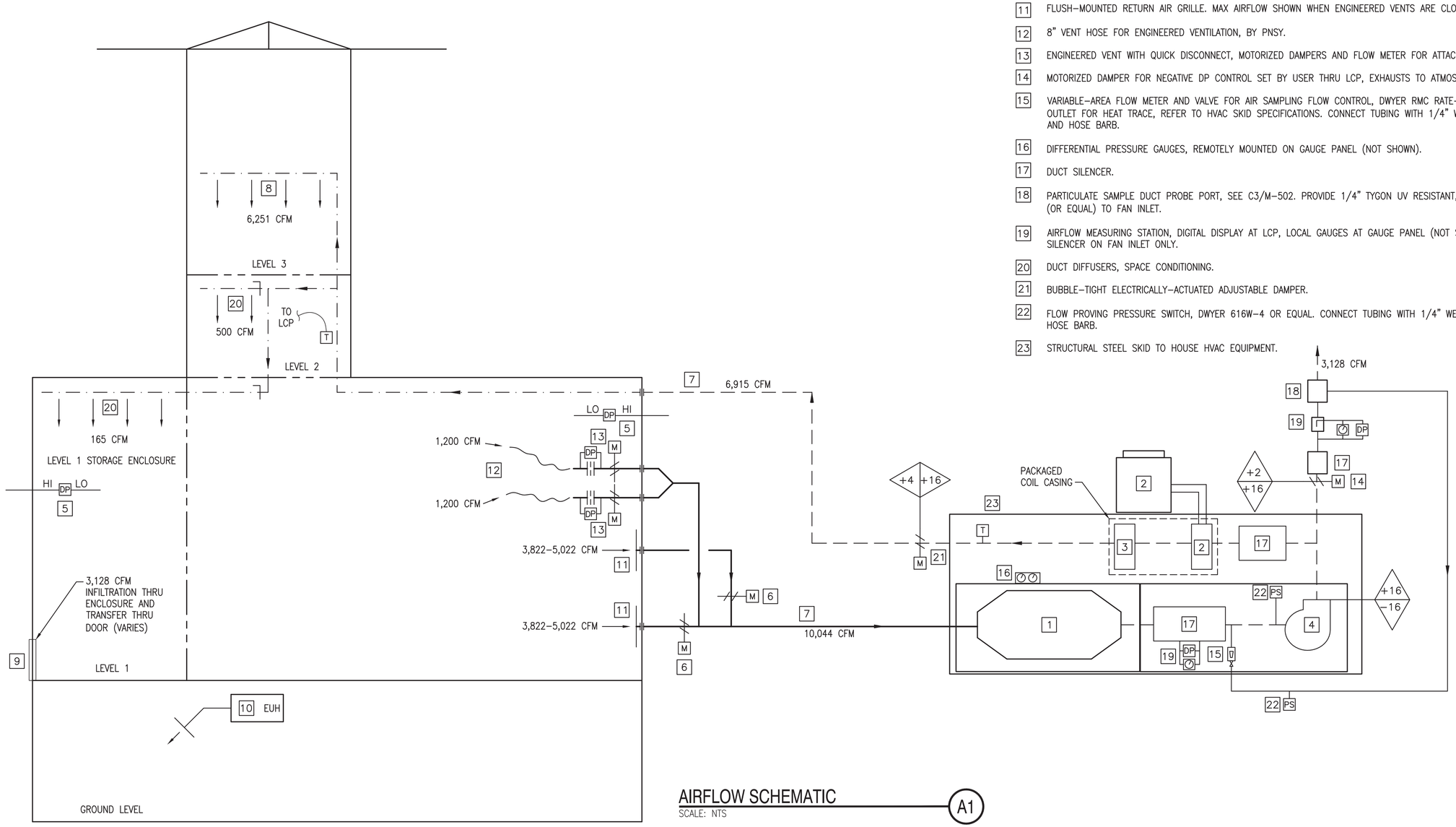

AIRFLOW SCHEMATIC

SCALE: NTS

A1

SYM	DESCRIPTION	DATE	APPR
0	ISSUED FOR CONSTRUCTION	10/28/2016	CBC

NAVFAC

STATE OF MAINE
PETER W. BROWN
No. 5743
PROFESSIONAL ENGINEER
10/28/16
SEAL

Colby Company engineering

A/E INFO

APPROVED
David W. Thurnfield
FOR COMMANDER NAVFAC

ACTIVITY
TIM FISHER
C. 2370.6 BRANCH HEAD

SATISFACTORY TO DATE 10/28/2016

DES EAF | DRW CSS | CHK PWB

PMDM PETER STOCKLESS

BRANCH MANAGER IAN BODWELL

FEA/PM&E AMIN BAHROUR

FIRE PROTECTION PATRICK BAKAJ

DEPARTMENT OF THE NAVY
NAVAL FACILITIES ENGINEERING COMMAND
PUBLIC WORKS DEPARTMENT - MAINE

NAVAL FACILITIES ENGINEERING COMMAND ~ MID-ATLANTIC
NAVAL SHIPYARD - PORTSMOUTH, NH

PORTSMOUTH NAVAL SHIPYARD
KITTERY, ME

DRY DOCK #1 DEFUELING COMPLEX
M-140 COMPLEX

AIRFLOW SCHEMATIC

EPROJECT NO.: 1363311

CONSTR. CONTR. NO.
N40085-17-C-5002

NAVFAC DRAWING NO.
12734936

SHEET 153 OF 188

M-504 | DD1-16-1017

DRAWFORM REVISION: 10 OCTOBER 2014

10/28/2016 6:51:05 AM X:\297 PORTSMOUTH NAVAL SHIPYARD\297.005.001 - DD#1 DEFUELING COMPLEX DESIGN\DRAWINGS\M140\SHEETS\M-504.DWG

NOTES

1. SEE SHEET M-001 FOR LEGEND, ABBREVIATIONS AND GENERAL NOTES.
2. THIS IS A CONCEPTUAL SCHEMATIC, REFER TO INDIVIDUAL EQUIPMENT SCHEDULES AND SPECIFICATION 23 74 00 PACKAGED, OUTDOOR, SKID-MOUNTED HEATING AND COOLING SYSTEM.
3. ENSURE MINIMUM STRAIGHT LENGTHS ARE ACHIEVED FOR AIRFLOW MEASURING STATIONS PER MANUFACTURER'S RECOMMENDATION.
4. INSTALL SHIMS AS NEEDED TO ENSURE SKID IS FLAT AND LEVEL. REFER TO SPECIFICATIONS FOR ANCHORING.
5. PROVIDE 1/8" PER FOOT DOWNWARD PITCH ON EXHAUST DUCT.

KEYED NOTES

1. ORIENTATION SHOWN FOR M-140-3 COMPONENTS/SKID. M-140-4 SKID IS MIRROR IMAGE.
2. MINIMIZE LENGTH OF EXHAUST AIR DUCT WHILE MAINTAINING STRAIGHT LENGTHS REQUIRED FOR AIRFLOW MEASURING STATION. CAP WITH SS BIRD SCREEN AND FLANGED END TO ALLOW FOR PRESSURE TESTING..

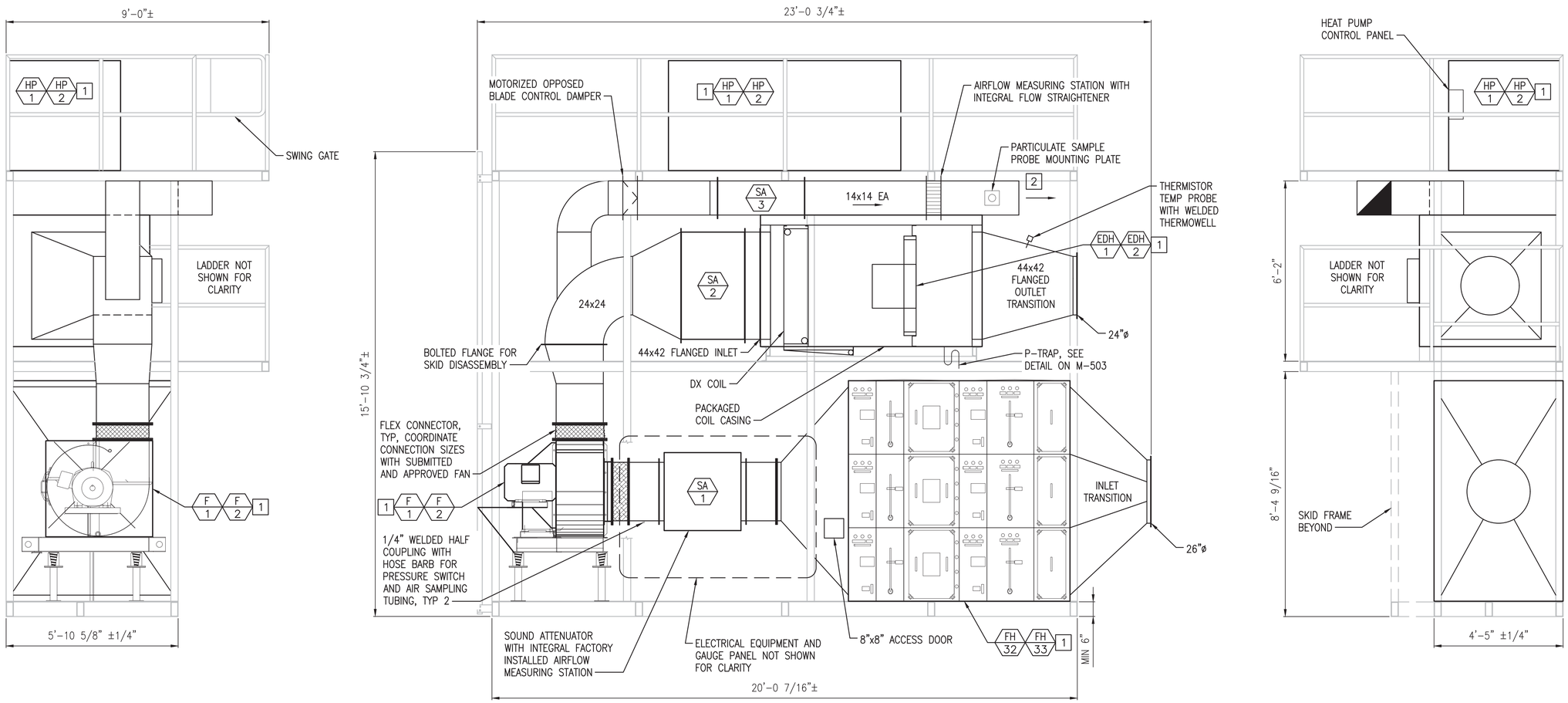

LEFT END VIEW

FRONT VIEW

RIGHT END VIEW

VENTILATION SKID

SCALE: 1/2" = 1'-0"

M-100 A1

Scale: 1/2" = 1'-0"

SYM	DESCRIPTION	DATE	APPR
0	ISSUED FOR CONSTRUCTION	10/28/2016	CBC

NAVFAC

STATE OF MAINE PETER W. BROWN No. 5743 REGISTERED PROFESSIONAL ENGINEER 10/28/16 SEAL

Colby Company engineering

A/E INFO

APPROVED David W. Thumfold

FOR COMMANDER NAVFAC

ACTIVITY: TIM FISHER, C. 2370.6 BRANCH HEAD

SATISFACTORY TO DATE 10/28/2016

DES EAF DRW CSS CHK PWB

PMDM PETER STOCKLESS

BRANCH MANAGER IAN BODWELL

FEA/DPM&E AMIN BAHROUR

FIRE PROTECTION PATRICK BAKAJ

DEPARTMENT OF THE NAVY
NAVAL FACILITIES ENGINEERING COMMAND
PUBLIC WORKS DEPARTMENT - MAINE

NAVAL FACILITIES ENGINEERING COMMAND ~ MID-ATLANTIC
NAVAL SHIPYARD - PORTSMOUTH, NH

PORTSMOUTH NAVAL SHIPYARD
KITTERY, ME

DRY DOCK #1 DEFUELING COMPLEX
M-140 COMPLEX

VENTILATION SKID

EPROJECT NO.: 1363311

CONSTR. CONTR. NO. N40085-17-C-5002

NAVFAC DRAWING NO. 12734937

SHEET 154 OF 188

M-505 DD1-16-1018

DRAWFORM REVISION: 10 OCTOBER 2014

10/28/2016 6:51:14 AM X:\297 PORTSMOUTH NAVAL SHIPYARD\297.005.001 - DD#1 DEFUELING COMPLEX DESIGN\DRAWINGS\M140\SHEETS\M-505.DWG

DX HEAT PUMP SCHEDULE

UNIT NO	LOCATION	SERVES	COOLING OPERATING RANGE (°F)	HEATING OPERATING RANGE (°F)	HEATING CAPACITY (MBH)	DX COIL: TOTAL MBH	REFRIG TYPE	AIRFLOW (CFM)	SUMMER AIR DATA: EAT DB/WB (°F)	SUMMER AIR DATA: LAT DB/WB (°F)	WINTER AIR DATA: EAT DB (°F)	WINTER AIR DATA: LAT DB (°F)	MAX FACE VELOCITY (FPM)	APD (IN)	HEAT PUMP ELECTRICAL: MCA	MAX CKT BKR	POWER	SYSTEM KW/COP	SYSTEM EER	WEIGHT (LBS)	MANUFACTURER AND MODEL (1)	NOTES
HP-1	SKID	M-140-3	65 TO 125	-18 TO 72	252	280	R-410A	6,915	83/67	55/54	68	105	500	0.78	45.5	50	460/3	21.6/3.2	10.5	848	TRANE TWA240E	1-8
HP-2	SKID	M-140-4	65 TO 125	-18 TO 72	252	280	R-410A	6,915	83/67	55/54	68	105	500	0.78	45.5	50	460/3	21.6/3.2	10.5	848	TRANE TWA240E	1-8

NOTES:
1. PROVIDE BACNET INTERFACE FOR MONITORING AND CONTROL, WITH BACNET TO ETHERNET CONVERTER.
2. PROVIDE INTEGRAL STARTER UNIT.
3. PROVIDE MANUFACTURER STAINLESS STEEL DRAIN PANS FOR CONDENSATE COLLECTION. ENSURE THE DRAIN PAN HAS PIPING WITH A LOOP SEAL (P-TRAP) AND THE LOOP IS LOCATED WHERE IT CAN BE INSPECTED FOR DEBRIS AND WATER SEAL. PROVIDE PROVISIONS TO ADD WATER TO THE LOOP TO CREATE A SEAL IF ONE IS NOT PRESENT.
4. PROVIDE WITH APR VALVE FOR CAPACITY CONTROL/REDUCTION. RAWAL DEVICES, OR EQUAL. FIELD INSTALLED.
5. FACTORY SUPPLIED BOLTED FLANGES ON COIL CASING.
6. PROVIDE FACTORY SELECTED TXV VALVES FOR FIELD INSTALLATION.
7. PROVIDE PACKAGED STAINLESS STEEL COIL CASING FOR DX HEAT PUMP COIL AND ASSOCIATED ELECTRIC HEAT COIL FOR EACH SKID.
8. WINTER SUPPLY AIR TEMPERATURE SUPPLEMENTED BY ASSOCIATED EDH AS NEEDED TO MEET DESIGN.

FILTER HOUSING SCHEDULE

UNIT NO	LOCATION	SERVES	TYPE	MAX CFM AIRFLOW	DESIGN CFM AIRFLOW	MAX FACE VEL (FPM)	TOTAL HOUSING PD: CLEAN (IN WC)	TOTAL HOUSING PD: DIRTY (IN WC)	AVERAGE DUST-SPOT EFFICIENCY	WEIGHT (LBS)	MANUFACTURER (1)	PREFILTER/TEST HOUSING MODEL (1)	HEPA HOUSING MODEL (1)	OUTLET TEST HOUSING MODEL (1)	NOTES
FH-32	SKID	M-140-3	2" PREFILTER 12" HEPA	12,000	10,044	500	1.80	5.17	25-30% >99.97%	2,816	FLANDERS	TSI-3H2W-2GG-304-D1	BF1-3H2W-GGF-304-D1	TSO-3H2W-GG-304-D1	1-6
FH-33	SKID	M-140-4	2" PREFILTER 12" HEPA	12,000	10,044	500	1.80	5.17	25-30% >99.97%	2,816	FLANDERS	TSI-3H2W-2GG-304-D1	BF1-3H2W-GGF-304-D1	TSO-3H2W-GG-304-D1	1-6

NOTES:
1. PROVIDE WEATHER CAP.
2. PROVIDE INTEGRAL FILTER GAUGES REMOTELY MOUNTED ON HVAC SKID GAUGE PANEL.
3. PROVIDE UP AND DOWNSTREAM IN-PLACE TEST HOUSINGS.
4. FILTER HOUSINGS FOR M-140-3 AND M-140-4 ARE MIRROR IMAGES OF EACH OTHER. LEFT HAND ACCESS FOR M-140-3, RIGHT HAND FOR M-140-4.
5. ALL WELDED TRANSITIONS, WITH BOLTED DUCT CONNECTIONS.
6. TOTAL PD ACCOUNTS FOR DIRTY PREFILTERS @ 1" WC AND HEPA FILTERS @ 4" WC.

KEYED NOTES:

(1) MANUFACTURERS NAME AND MODEL NUMBER ARE USED FOR DESCRIPTIVE PURPOSES ONLY AND ARE INTENDED TO INDICATE THE STANDARD OF MATERIAL OR ARTICLES REQUIRED. DESIGN IS PREDICATED AROUND LISTED MANUFACTURERS AS NOTED ON SCHEDULES AND IS NOT INTENDED TO LIMIT THE CONTRACTOR TO ONE MANUFACTURER.

FAN SCHEDULE

UNIT NO	LOCATION	SERVES	TYPE	CONFIGURATION	CFM	TOTAL SP (IN WG)	HP	RPM	DRIVE	VOLTS	PHASE	MOTOR TYPE	MANUFACTURER AND MODEL (1)	NOTES
F-1	SKID	M-140-3	CENTRIFUGAL	ARR 4, CCW ROT, UPBLAST	10,044	15.6	40	1,695	DIRECT	460	3	TEFC	TWIN CITY RBA-919	1-6
F-2	SKID	M-140-4	CENTRIFUGAL	ARR 4, CW ROT, UPBLAST	10,044	15.6	40	1,695	DIRECT	460	3	TEFC	TWIN CITY RBA-919	1-6
CF-1	INTERIOR	GROUND LEVEL	CEILING	-	-	-	1	-	DIRECT	460	3	-	KELLEY WAVE 10' HVLS	7,8

NOTES:
1. PROVIDE MOTOR SHAFT GROUNDING RING.
2. COORDINATE WITH INLET AND OUTLET SILENCERS.
3. SUPPLY WITH PREMIUM EFFICIENCY MOTOR AND VFD.
4. TYPE B SPARK RESISTANT CONSTRUCTION.
5. CORROSION RESISTANT ZINC-RICH POWDER BASE COAT AND POLYESTER URETHANE POWDER TOP COAT.
6. C-FACE MOTOR MOUNT.
7. PROVIDE FIRE ALARM INTERLOCK, COORDINATE WITH FIRE ALARM CONTRACTOR FOR CONNECTION.
8. PROVIDE WALL MOUNTED DIGITAL CONTROL PANEL.

DIFFUSER/REGISTER/GRILLE SCHEDULE

UNIT NO	NECK SIZE	MAX PRESSURE DROP (IN WC)	MAX NOISE CRITERIA (NC)	CFM RANGE	TYPE/SIZE (INXIN)	MANUFACTURER AND MODEL (1)	NOTES
S-1	34" DIA	0.06	35	0-6,300	36"ø	MCGILL DDF-SP	1,4
S-2	4x12	0.02	20	0-55	4x12	MCGILL DDF-SP	1
S-3	4x12	0.02	20	0-250	4x12	MCGILL DDF-SP	1
R-1	36x40	0.33	30	0-5,022	36x40	PRICE MSSG WIRE MESH GRILLE	1,3
T-1	24x16	0.01	20	0-410	24x16	PRICE ATG1 GRILLE	1,2,5
T-2	30x18	0.02	31	0-500	30x18	PRICE ATG1 GRILLE	1,5

NOTES:
1. STAINLESS STEEL, WHITE POWDER COAT, OR ALUMINUM FINISH.
2. PROVIDE AUXILIARY FLANGE ASSEMBLY.
3. SUPPLY WITHOUT SECURITY BARS. MATCH BOLT HOLES WITH PENETRATION SLEEVE (BY STRUCTURAL).
4. PROVIDE 180° PERFORATED AREA LENGTH OF HEADER W/ FACTORY SIZED ORIFICE PLATES EVERY 4' TO ENSURE PERPENDICULAR FLOW.
5. TRANSFER GRILLE AIRFLOWS SHOWN ON PLANS ARE "ESTIMATED VALUES" VARYING WITH SPACE PRESSURE.

RETRACTABLE ROOF EQUIPMENT SCHEDULE

UNIT NO	DESCRIPTION	RATING	GEAR RATIO	WHEEL DIAMETER (IN)	WHEEL TREAD WIDTH (IN)	RAIL WIDTH MIN/MAX (IN)	MANUFACTURER AND MODEL (1)	NOTES
GM-1-8	GEAR MOTOR, INVERTER DUTY W/ MANUAL BRAKE RELEASE	1 HP	90:1	-	-	-	DEMAG WUE30DD ZBA80A4 B007	1,3
WB-1-16	WHEELBLOCK, DOUBLE FLANGE	10,000 LB	-	6.3	1.85	1.93/2.24	DEMAG DRS160A47KH	2

NOTES:
1. 460V/3PH/60Hz
2. PROVIDE HORIZONTAL GUIDE ROLLERS
3. COORDINATE ORIENTATION OF GEARMOTOR OUTPUT SHAFT AND ELECTRICAL JUNCTION BOX WITH LEFT OR RIGHT HAND OPERATION.

ELECTRIC HEATER SCHEDULE

UNIT NO	SERVES	CFM	HEATING (MBH)	ELECTRICAL: KW	ELECTRICAL: VOLTS	ELECTRICAL: PHASE	MAX AMP RATING	WEIGHT (LBS)	MANUFACTURER AND MODEL (1)	NOTES
EUH-1	GROUND LEVEL	350	17.0	5	460	3	6	27	QMARK MUH05-41	1
EUH-2	GROUND LEVEL	350	17.0	5	460	3	6	27	QMARK MUH05-41	1
EUH-3	GROUND LEVEL	350	17.0	5	460	3	6	27	QMARK MUH05-41	1
EUH-4	GROUND LEVEL	350	17.0	5	460	3	6	27	QMARK MUH05-41	1
EUH-5	GROUND LEVEL	350	17.0	5	460	3	6	27	QMARK MUH05-41	1
EUH-6	GROUND LEVEL	350	17.0	5	460	3	6	27	QMARK MUH05-41	1
EUH-7	GROUND LEVEL	350	17.0	5	460	3	6	27	QMARK MUH05-41	1
EUH-8	CRANE CONTROL AREA LEVEL 3	250	10.2	3	460	3	3.6	27	QMARK MUH03-41	1
EDH-1	SUPPLY AIR	6,915	379	111	460	3	139	-	THERMOLEC TYPE SC	2
EDH-2	SUPPLY AIR	6,915	379	111	460	3	139	-	THERMOLEC TYPE SC	2

NOTES:
1. SUPPLY WITH REMOTE THERMOSTAT AND MOUNTING BRACKET.
2. PROVIDED WITH HVAC SKID IN PACKAGED CASING WITH COOLING COIL.

SOUND ATTENUATOR SCHEDULE

UNIT NO	SYSTEM	SERVES	QTY	CONNECTION DIMENSIONS/ID: W (IN)	CONNECTION DIMENSIONS/ID: H (IN)	LENGTH (IN)	AIR FLOW (CFM)	VELOCITY (FPM)	P.D. (INWG)	DYNAMIC INSERTION LOSS (dB): 32	63	125	250	500	1000	2000	4000	8000	VAW SYSTEMS MODEL	NOTES
SA-1,4	M-140	INLET	2	26	32	36	10,044	-3,192	0.33	-	5	8	10	13	14	9	6	5	RSA-32V54	1,3,4
SA-2,5	M-140	DISCHARGE	2	44	42	24	6,915	513	0.11	-	4	8	10	18	19	19	10	10	RSA-22V469	2,3,4
SA-3,6	M-140	EXHAUST	2	14	14	36	3,128	2,298	0.28	-	3	4	8	15	20	16	15	11	RSA-15V60	2,3,4

NOTES:
1. 26"ø FLANGED, BOLTED CONNECTION. PROVIDE WITH INTEGRAL STATIC AND TOTAL PRESSURE PROBES FOR AIRFLOW MEASUREMENT. PROVIDE WELDED COMPANION FLANGE AND GASKET FOR AIRTIGHT PROBE INSTALLATION.
2. FLANGED, BOLTED CONNECTION.
3. MINIMUM 18 GA WELDED CASING TO WITHSTAND MAX PRESSURE OF ASSOCIATED FAN.
4. RATED FOR EXTERIOR USE.

SYM	DESCRIPTION	DATE	APPR
0	ISSUED FOR CONSTRUCTION	10/28/2016	CBC

NAVFAC

STATE OF MAINE PETER W. BROWN No. 5743 PROFESSIONAL ENGINEER 10/28/16 SEAL

Colby Company engineering A/E INFO

APPROVED David W. Trumfield FOR COMMANDER NAVFAC

ACTIVITY TIM FISHER C. 2370.6 BRANCH HEAD

SATISFACTORY TO DATE 10/28/2016

DES EAF DRW CSS CHK PWB

PMDM PETER STOCKLESS

BRANCH MANAGER IAN BODWELL

FEAD/PM&E AMIN BAHROUR

FIRE PROTECTION PATRICK BAKAJ

DEPARTMENT OF THE NAVY
NAVAL FACILITIES ENGINEERING COMMAND
PUBLIC WORKS DEPARTMENT - MAINE

NAVAL FACILITIES ENGINEERING COMMAND ~ MID-ATLANTIC
NAVAL SHIPYARD - PORTSMOUTH, NH

PORTSMOUTH NAVAL SHIPYARD
KITTERY, ME

DRY DOCK #1 DEFUELING COMPLEX
M-140 COMPLEX

MECHANICAL SCHEDULES

EPROJECT NO.: 1363311

CONSTR. CONTR. NO. N40085-17-C-5002

NAVFAC DRAWING NO. 12734938

SHEET 155 OF 188

M-601 | DD1-16-1019

DRAWFORM REVISION: 10 OCTOBER 2014

10/28/2016 6:51:18 AM X:\297 PORTSMOUTH NAVAL SHIPYARD\297.005.001 - DD#1 DEFUELING COMPLEX DESIGN\DRAWINGS\M140\SHEETS\M-601.DWG

LIGHTING

- Ab — 2x4 FLUORESCENT FIXTURE; ASSOCIATED CONTROL DEVICE; FIXTURE TYPE (SEE LIGHT FIXTURE SCHED.)
- 1x4 FLUORESCENT FIXTURE
- WALL MOUNTED FIXTURES
- PORTABLE WORK LIGHT
- EXIT SIGN, CEILING MOUNTED; SHADING INDICATES SIGN FACE; ARROW INDICATES EGRESS DIRECTION
- EXIT SIGN, WALL MOUNTED
- DUAL HEAD EMERGENCY LIGHT BATTERY PACK
- REMOTE EMERGENCY LIGHTING HEAD
- AA — WALLPACK; FIXTURE TYPE (SEE LIGHT FIXTURE SCHED.)
- HOME RUN
- S_3 — 3-WAY TOGGLE SWITCH
- S_4 — 4-WAY TOGGLE SWITCH
- S_a — SINGLE POLE TOGGLE SWITCH; INDICATES CONTROLLED FIXTURE
- LC — LIGHTING CONTACTOR
- TC — TIME CLOCK
- AA,45 — FLOOD LIGHT; INDICATES MOUNTING ANGLE (FROM VERTICAL); FIXTURE TYPE (SEE LIGHT FIXTURE SCHED.)

COMMUNICATIONS

- TELEPHONE SYSTEM WALL JACK
- DATA SYSTEM OUTLET
- COMBINATION VOICE/DATA SYSTEM OUTLET
- S2 — SPEAKER, CEILING MOUNTED
  - 1 – FLUSH
  - 2 – SURFACE
  - 3 – HORN
  - 4 – DUAL HORN
- HS — SPEAKER, WALL MOUNTED
- HS — INTERCOM SYSTEM HANDS-FREE STATION
- DS — INTERCOM SYSTEM DOOR STATION
- CCTV — CLOSED CIRCUIT TELEVISION OUTLET, MOUNT 18" AFF UNLESS OTHERWISE NOTED

SECURITY

- IDS DS — INTRUSION DETECTION SYSTEM ALARM POINT
  - DS – MAGNETIC DOOR SWITCH
  - MS – MOTION SENSOR
  - C – CAMERA
- CARD — SECURITY SYSTEM CARD READER

POWER

- 60 (4) — NON-FUSED SAFETY SWITCH; NEMA ENCLOSURE; AMPERE RATING
- (4) F 60AS 40AF — FUSED SAFETY SWITCH, TOP NUMBER INDICATES SWITCH AMPERE RATING, LOWER NUMBER INDICATES FUSE RATING; NEMA ENCLOSURE
- 1 (4) — MAGNETIC MOTOR STARTER, FVNR UNLESS INDICATED OTHERWISE; NEMA ENCLOSURE; NEMA SIZE (TYP.)
- 5 XP — ELECTRIC MOTOR, NUMBER INDICATES HORSEPOWER RATING; XP – EXPLOSION PROOF
- CONDUIT TURNING UP
- CONDUIT TURNING DOWN
- E — DUPLEX RECEPTACLE, NEMA 5-20R
  - E – INSTALLED ON EMERGENCY CIRCUIT
  - IG – ISOLATED GROUND
  - S – SWITCHED RECEPTACLE
- WP — GFCI DUPLEX RECEPTACLE, NEMA 5-20R; WEATHER PROOF
- POWER RECEPTACLE, 250 VOLT NEMA CONFIGURATION AS NOTED
- POWER RECEPTACLE, 440 VOLT NEMA CONFIGURATION AS NOTED
- PANELBOARD, NORMAL POWER
- PANELBOARD, EMERGENCY POWER
- CB 100A — ENCLOSED CIRCUIT BREAKER; AMPERE RATING
- J — JUNCTION BOX, SIZE AS REQUIRED
- M — MANUAL MOTOR STARTER, TOGGLE OPERATED; MULTIPLE PHASE, 1, 2, OR 3 POLE AS REQUIRED; PROVIDE WITH INTEGRAL OVERLOAD PROTECTION
- W — WALL BOX (FLUSH MOUNTED, UNLESS NOTED)
- T — TERMINAL BLOCK
- VFD — VARIABLE FREQUENCY DRIVE
- PB — PUSHBUTTON SWITCH, MOUNTED 48" AFF
- EPO — EMERGENCY POWER OFF PUSH BUTTON STATION

SITE/GROUNDING

- COPPER CLAD STEEL GROUND ROD
- EXOTHERMIC WELD CONNECTION
- G — BARE COPPER CONDUCTOR EXPOSED
- G — BARE COPPER CONDUCTOR BELOW GRADE
- G — BARE COPPER CONDUCTOR EMBEDDED IN CONCRETE
- EGB — ELECTRICAL SERVICE GROUND BUS
- TGB — TELECOMMUNICATIONS GROUNDING BLOCK
- CEE — CONCRETE ENCASED ELECTRODE
- UE — UNDERGROUND ELECTRIC

LINE TYPES

- EXISTING
- NEW
- DEMOLITION
- MATCHLINE
- PART PLAN OUTLINE

ONE-LINE DIAGRAM

- X — CIRCUIT BREAKER; TRIP AMPS
- DISCONNECT, ISOLATION OR SAFETY SWITCH
- FUSED CUTOUT
- FUSED LOAD BREAK SWITCH
- MEDIUM VOLTAGE MOTOR STARTER
- CAPACITOR
- DRAWOUT DEVICE
- GROUND
- FUSE
- ST — SHUNT TRIP
- CONTACTOR
- POWER TRANSFORMER
  - OA – LIQUID TYPE SELF COOLED
  - AA – DRY TYPE SELF COOLED
  - FA – FAN COOLED
  - CONNECTION (DELTA-WYE)
- 1 — MAGNETIC MOTOR STARTER
  - FVNR UNLESS OTHERWISE NOTED
  - FVR – FULL VOLTAGE REVERSING
  - RVAT – REDUCING VOLTAGE AUTO TRANSFORMER
  - 2S – TWO SPEED
  - NEMA SIZE
- 1/2 — MOTOR, NUMBER INDICATES HORSEPOWER
- KWH — METER

A	AMMETER
HZ	FREQUENCY METER
KWH	KILOWATT HOUR
KVAR	KILOVAR METER
PZ	POWER FACTOR METER
V	VOLTMETER
VAR	VAR METER
W	WATTMETER
WH	WATT HOURMETER

- DPM — DIGITAL POWER METER
- SPD — SURGE PROTECTIVE DEVICE
- PORTABLE CABLE MALE PLUG
- PORTABLE CABLE FEMALE RECEPTACLE
- J — DISCONNECT INTERLOCKED MALE PLUG

ABBREVIATIONS

AMP	AMPERE
AFF	ABOVE FINISHED FLOOR
AFG	ABOVE FINISHED GRADE
AHJ	AUTHORITY HAVING JURISDICTION
AIC	AMPERE INTERRUPTING CAPACITY
AWG	AMERICAN WIRE GAUGE
BFG	BELOW FINISHED GRADE
BLDG	BUILDING
BOS	BOTTOM OF STEEL
C	CONDUIT
CATV	CABLE TELEVISION
CB	CIRCUIT BREAKER
CCTV	CLOSED CIRCUIT TELEVISION
CT	CURRENT TRANSFORMER
CU	COPPER
DB	DIRECT BURIED
DISCO	DISCONNECT
DN	DOWN
EMT	ELECTRICAL METALLIC TUBING
EWC	ELECTRIC WATER COOLER
EWH	ELECTRIC WATER HEATER
EQP	EQUIPMENT
EXIST	EXISTING
FAA	FIRE ALARM ANNUNCIATOR
FACP	FIRE ALARM CONTROL PANEL
FBO	FURNISHED BY OTHERS
FLR	FLOOR
FVNR	FULL VOLTAGE NON REVERSING
FWE	FURNISHED WITH EQUIPMENT
FU	FUSE
GEN	GENERATOR
GFCI	GROUND FAULT CIRCUIT INTERRUPT
CLG	CEILING
GND	GROUND
HP	HORSEPOWER
HTR	HEATER
IG	ISOLATED GROUND
IMC	INTERMEDIATE METAL CONDUIT
K	KILO
KA	KILO-AMP
KCMIL	THOUSAND CIRCULAR MILS
KV	KILOVOLT
KVA	KILOVOLT-AMPERE
KW	KILOWATT
KWH	KILOWATT-HOUR
LA	LIGHTNING ARRESTER
LTG	LIGHTING
LFMC	LIQUID-TIGHT FLEXIBLE METAL CONDUIT
MAX	MAXIMUM
MC	METAL CLAD
MCB	MAIN CIRCUIT BREAKER
MFR	MANUFACTURER
MLO	MAIN LUG ONLY
MOP	MAXIMUM OVERCURRENT PROTECTION
MS/TP	MASTER-SLAVE TOKEN-PASSING
MTD	MOUNTED
MV	MEDIUM VOLTAGE
NC	NORMALLY CLOSED
NEC	NATIONAL ELECTRIC CODE
NEG	NEGATIVE
NEUT	NEUTRAL
NIC	NOT IN CONTRACT
NO	NORMALLY OPEN
NTS	NOT TO SCALE
PH	PHASE
PLC	PROGRAMMABLE LOGIC CONTROLLER
PV	PHOTOVOLTAIC
PVC	POLYVINYL CHLORIDE
RM	ROOM
RGS	RIGID GALVANIZED STEEL CONDUIT
RSC	RIGID STEEL CONDUIT
RTU	ROOF TOP UNIT
SWBD	SWITCHBOARD
TGB	TELECOMMUNICATIONS GROUNDING BUSBAR
TOS	TOP OF STEEL
TANSF	TRANSFORMER
TVSS	TRANSIENT VOLTAGE SURGE SUPPRESSOR
TX	TRANSFORMER
V	VOLT
VA	VOLT-AMPERE
VFD	VARIABLE FREQUENCY DRIVE
WM	WATT METER
WP	WEATHER PROOF
XFMR	TRANSFORMER
XP	EXPLOSION PROOF

GENERAL NOTES

1. ALL GENERAL NOTES, SYMBOL LISTS AND DETAILS ARE TO BE CONSIDERED AS APPLICABLE TO ALL ELECTRICAL DRAWINGS FOR THIS PROJECT. SYMBOLS AND ABBREVIATIONS SHOWN ON THIS SHEET ARE FOR REFERENCE ONLY AND DO NOT INDICATE THEIR INCORPORATION IN THE DESIGN.
2. ALL WORK SHALL BE PERFORMED IN ACCORDANCE WITH NFPA-70, NATIONAL ELECTRICAL CODE (NEC) 2014.
3. ALL CONDUCTOR MATERIAL, INCLUDING WIRING, PANELBOARD BUSES, TRANSFORMER WINDINGS, AND GROUNDING SHALL BE COPPER. ALUMINUM CONDUCTORS SHALL NOT BE ALLOWED.
4. UNLESS OTHERWISE NOTED, WIRING SHALL BE 2#12 AWG CONDUCTORS AND #12 GND. HOME RUNS FED FROM 20A-1P CIRCUITS IN EXCESS OF 100 FEET SHALL BE #10 AWG.
5. FLEXIBLE CONNECTIONS TO MOTORS SHALL BE LIQUID TIGHT FLEXIBLE METAL CONDUIT, UNLESS OTHERWISE NOTED.
6. LIGHTING TOGGLE SWITCHES SHALL BE COMMERCIAL SPECIFICATION GRADE 277/120 VOLT, SIDE WIRED AND PROVIDED WITH GROUNDING SCREW. LEVITON, PASS AND SEYMOUR OR APPROVED EQUAL.
7. CONVENIENCE RECEPTACLES SHALL BE COMMERCIAL SPECIFICATION GRADE GROUNDING TYPE NEMA 5-20R, SIDE WIRED. LEVITON, PASS AND SEYMOUR OR APPROVED EQUAL.
8. GFCI CONVENIENCE RECEPTACLES SHALL BE FEED THRU TYPE WITH SINGLE GFCI AT START OF CIRCUIT FEEDING NON-GFCI TYPE RECEPTACLES.
9. PROVIDE WALL PLATES FOR ALL WIRING DEVICES. ALL PLATES SHALL BE STAINLESS STEEL.
10. ALL INTERIOR DISTRIBUTION AND BRANCH WIRING SHALL BE 600V, COPPER WITH THHN/THWN INSULATION, UNLESS OTHERWISE NOTED. ALL EXTERIOR DISTRIBUTION AND BRANCH WIRING SHALL BE 600V, COPPER WITH XHHW INSULATION.
11. MOUNT ALL DISCONNECTS AND MOTOR STARTERS IN AN ACCESSIBLE LOCATION WITHIN SIGHT OF THE LOAD SERVED, UNLESS OTHERWISE INDICATED ON PLANS.
12. UNLESS OTHERWISE NOTED CONVENIENCE RECEPTACLES SHALL BE MOUNTED 18-INCHES AFF, PHONE SYSTEM OUTLETS 60-INCHES AFF, INTERCOM SYSTEM OUTLETS 60-INCHES AFF, AND LIGHTING TOGGLE SWITCHES 48-INCHES AFF.
13. ALL PENETRATIONS THROUGH FLOORS, RATED WALLS AND PARTITIONS SHALL BE SEALED WITH UL APPROVED FIRE SEALANT MATERIAL TO MAINTAIN THE RATING OF SEPARATION.
14. COORDINATE ALL EQUIPMENT CONNECTIONS – INCLUDING DISCONNECTING MEANS, OVERCURRENT PROTECTION, AND WIRE SIZING – WITH SELECTED MANUFACTURERS' RECOMMENDED INSTRUCTIONS.
15. PROVIDE ALL MOUNTING HARDWARE NECESSARY FOR A COMPLETE INSTALLATION. MOUNT EQUIPMENT AND ROUTE CONDUIT SO AS NOT TO INTERFERE WITH OPERATIONS SUCH AS DOOR SWINGS, MECHANICAL EQUIPMENT, ETC.
16. MANUFACTURERS NAME AND MODEL NUMBERS ARE USED THROUGHOUT THE PROJECT FOR DESCRIPTIVE PURPOSES ONLY AND ARE INTENDED TO INDICATE THE STANDARD OF MATERIAL OR ARTICLES REQUIRED. DESIGN IS PREDICATED AROUND LISTED MANUFACTURERS AS NOTED ON SCHEDULES AND NOTES AND IS NOT INTENDED TO LIMIT THE CONTRACTOR TO ONE MANUFACTURER.
17. CONTRACTOR SHALL LABEL ALL ELECTRICAL INFRASTRUCTURE INCLUDING PANELBOARDS, DISCONNECTS, JUNCTION BOXES, RECEPTACLES, TRANSFORMERS, AND CONTROL BOXES IN ACCORDANCE WITH THE PROJECT DRAWINGS, PROJECT SPECIFICATIONS, AND PNS LABELING STANDARDS. LABELING SHALL CONSIST OF EQUIPMENT, POWER SOURCE, POWER FEED, ARC-FLASH REQUIREMENTS, AND CLEARANCE REQUIREMENTS AT A MINIMUM.
18. ALL EXTERIOR ELECTRICAL BOXES SHALL BE WIRED WITH A DRIP LOOP TO PREVENT WATER INFILTRATION INTO THE BOXES. FOR ALL LOCATIONS WHERE POSSIBLE, ENTRY INTO THE BOXES SHALL BE FROM/TO THE BOTTOM OF THE ELECTRICAL BOXES. WHERE BOTTOM ENTRY NOT POSSIBLE, A MEANS OF WEATHER PROTECTION SHALL BE PROVIDED.
19. ALL SECURITY SYSTEM CARD READERS, SURVEILLANCE CAMERAS, AND MOTION SENSORS SHALL BE INSTALLED AND WIRED BY THE GOVERNMENT. CONTRACTOR SHALL PROVIDE PATHWAYS TO THE ACE FOR ALL DEVICE WIRING. CONTRACTOR SHALL PROVIDE AND INSTALL DOOR MAGNETIC SWITCHES, WIRE THEM, THEN RUN THE WIRES TO THE SECURITY CONNECTION POINT IN ACE-3, WHERE THEY WILL BE CONNECTED BY THE GOVERNMENT.

SYM	DESCRIPTION	DATE	APPR
0	ISSUED FOR CONSTRUCTION	10/28/2016	CBC

NAVFAC

STATE OF MAINE — JASON M. BEAULIEU No. 13441 — LICENSED PROFESSIONAL ENGINEER — 10/28/16 — SEAL

Colby Company engineering — A/E INFO

APPROVED: David W. Thurnfield — FOR COMMANDER NAVFAC

ACTIVITY: TIM FISHER, C. 2370.6 BRANCH HEAD

SATISFACTORY TO: DATE 10/28/2016

DES JMB | DRW JMB | CHK MRL

PMDM: PETER STOCKLESS

BRANCH MANAGER: IAN BODWELL

FEA/DPM&E: AMIN BAHROUR

FIRE PROTECTION: PATRICK BAKAJ

DEPARTMENT OF THE NAVY — NAVAL FACILITIES ENGINEERING COMMAND — PUBLIC WORKS DEPARTMENT - MAINE

NAVAL FACILITIES ENGINEERING COMMAND ~ MID-ATLANTIC — NAVAL SHIPYARD - PORTSMOUTH, NH

PORTSMOUTH NAVAL SHIPYARD — KITTERY, ME

DRY DOCK #1 DEFUELING COMPLEX

M-140 COMPLEX

ELECTRICAL LEGEND, ABBREVIATIONS AND GENERAL NOTES

EPROJECT NO.: 1363311

CONSTR. CONTR. NO.: N40085-17-C-5002

NAVFAC DRAWING NO.: 12734939

SHEET 156 OF 188

E-001 | DD1-16-1020

DRAWFORM REVISION: 10 OCTOBER 2014

10/28/2016 6:51:22 AM X:\297 PORTSMOUTH NAVAL SHIPYARD\297.005.001 - DD#1 DEFUELING COMPLEX DESIGN\DRAWINGS\M140\SHEETS\E-001.DWG

CIRCUIT SCHEDULE

1 M-140-3 PANEL 3 #1,3,5	9 M-140-3 PANEL 3 #2,4,6	17 M-140-4 PANEL 2 #4	25 M-140-3 PANEL 2 #22
2 M-140-3 PANEL 3 #7,9,11	10 M-140-3 PANEL 3 #8,10,12	18 M-140-3 PANEL 1 #8,10,12	26 M-140-4 PANEL 2 #14
3 M-140-3 PANEL 1 #2,4,6	11 M-140-3 PANEL 3 #14,16,18	19 M-140-3 PANEL 1 #14,16,18	
4 M-140-3 PANEL 3 #13,15,17	12 M-140-3 PANEL 3 #20,22,24	20 M-140-4 PANEL 1 #8,10,12	
5 M-140-3 PANEL 3 #19,21,23	13 NOT USED	21 M-140-4 PANEL 1 #14,16,18	
6 M-140-4 PANEL 1 #2,4,6	14 M-140-3 PANEL 2 #1	22 M-140-3 PANEL 2 #27	
7 M-140-3 PANEL 1 #13,15,17	15 M-140-4 PANEL 2 #1	23 M-140-3 PANEL 3 #31,33,35	
8 M-140-3 PANEL 1 #19,21,23	16 M-140-3 PANEL 2 #6	24 M-140-3 PANEL 3 #37,39,41	

NOTES

1. SEE SHEET E-001 FOR LEGEND, ABBREVIATIONS AND GENERAL NOTES.
2. SEE MECHANICAL SHEETS FOR EQUIPMENT DETAILS AND EXACT LOCATIONS.
3. GFCI CONVENIENCE RECEPTACLES SHALL BE FEED THRU TYPE WITH SINGLE GFCI AT START OF CIRCUIT FEEDING NON-GFCI TYPE RECEPTACLES.
4. AN ENVELOPE OF 12' WIDE AND 18' HIGH IS REQUIRED THROUGH THE M-140 GROUND LEVEL FOR THE RAILCARS. ALL BUILDING ELEMENTS AND SYSTEMS SHALL BE COORDINATED TO KEEP THE ENVELOPE CLEAR.

KEYED NOTES

1. PROVIDE LFMC FROM CARD READER GANG BOX TO INTERIOR OF ENCLOSURE. TRANSITION TO EMT WITHIN ENCLOSURE.
2. ELECTRIC HEATING COIL DISCONNECT. FURNISHED WITH SKID.
3. CONDENSING UNIT DISCONNECT. FURNISHED WITH SKID.
4. RETURN FAN DISCONNECT. FURNISHED WITH SKID.
5. RETURN FAN VFD.
6. PROVIDE DISCONNECT AND WIRE TO 100A CIRCUIT. LEAVE LOAD LUGS UNCONNECTED.
7. NEMA 3R JUNCTION BOX WITH (3) 400A LUGS FOR SERVICE CONNECTION.
8. ROOF SYSTEM MOTOR VFD
9. PROVIDE RECEPTACLE INSIDE PA SYSTEM NETWORKING CABINET
10. SKID MOUNTED CONVENIENCE RECEPTACLE. FURNISHED WITH SKID. PROVIDE 120V CIRCUIT AS INDICATED.

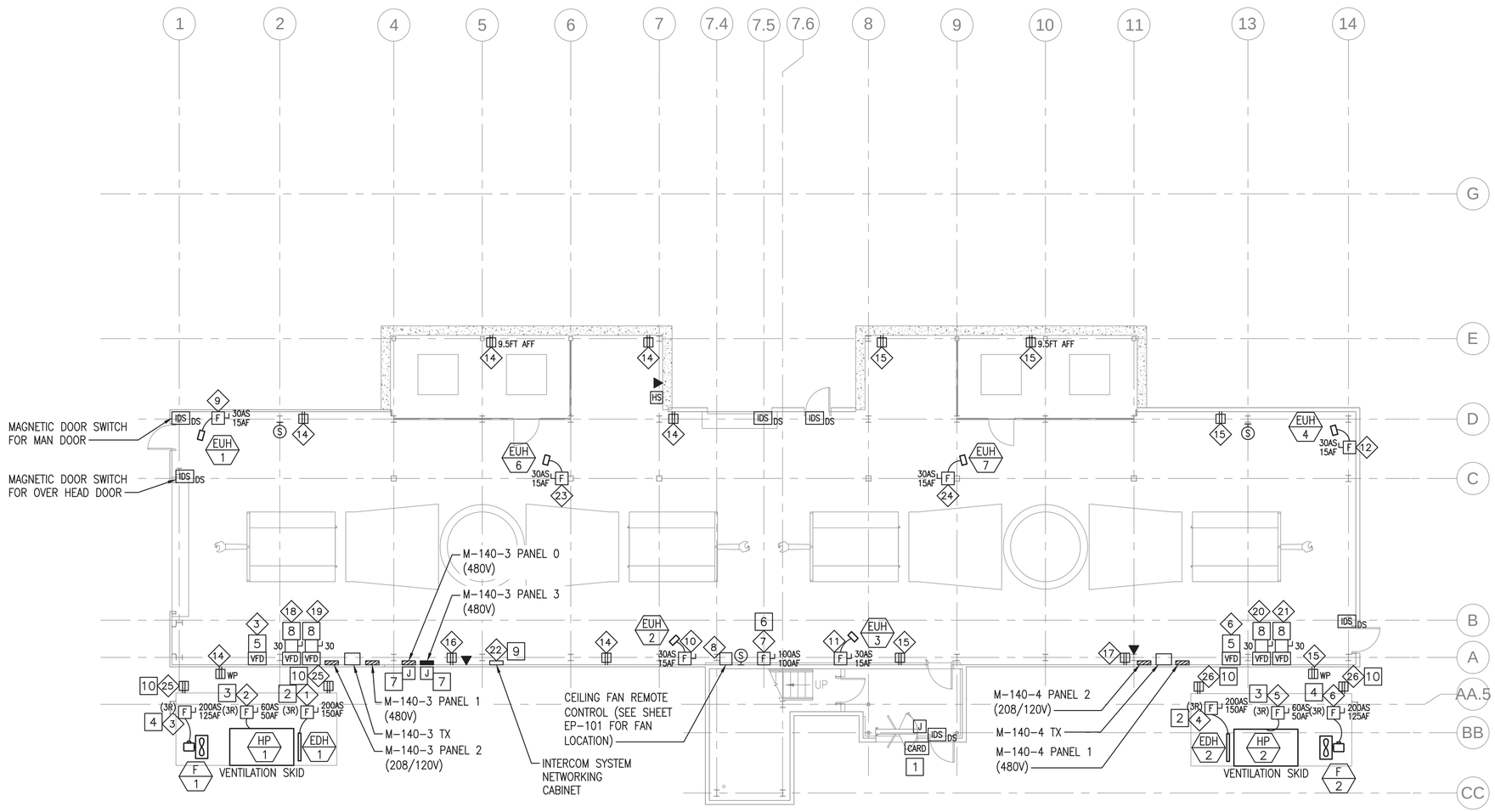

GROUND LEVEL POWER AND SYSTEMS PLAN (NO STORAGE ENCLOSURE)

SCALE: 1/8" = 1'-0"

PLAN NORTH

Scale: 1/8" = 1'-0"

SYM	DESCRIPTION	DATE	APPR
0	ISSUED FOR CONSTRUCTION	10/28/2016	CBC

NAVFAC

STATE OF MAINE JASON M. BEAULIEU No. 13441 LICENSED PROFESSIONAL ENGINEER 10/28/16 SEAL

Colby Company engineering

A/E INFO

APPROVED David W. Thumfold

FOR COMMANDER NAVFAC

ACTIVITY TIM FISHER C. 2370.6 BRANCH HEAD

SATISFACTORY TO DATE 10/28/2016

DES JMB DRW JMB CHK MRL

PMDM PETER STOCKLESS

BRANCH MANAGER IAN BODWELL

FEAD/PMAE AMIN BAHROUR

FIRE PROTECTION PATRICK BAKAJ

DEPARTMENT OF THE NAVY
NAVAL FACILITIES ENGINEERING COMMAND
PUBLIC WORKS DEPARTMENT - MAINE

NAVAL FACILITIES ENGINEERING COMMAND ~ MID-ATLANTIC
NAVAL SHIPYARD - PORTSMOUTH, NH

PORTSMOUTH NAVAL SHIPYARD
KITTERY, ME

DRY DOCK #1 DEFUELING COMPLEX
M-140 COMPLEX

GROUND LEVEL POWER AND SYSTEMS PLAN (NO STORAGE ENCLOSURE)

EPROJECT NO.: 1363311

CONSTR. CONTR. NO. N40085-17-C-5002

NAVFAC DRAWING NO. 12734940

SHEET 157 OF 188

EP-100 | DD1-16-1021

DRAWFORM REVISION 10 OCTOBER 2014

10/28/2016 6:51:27 AM X:\297 PORTSMOUTH NAVAL SHIPYARD\297.005.001 - DDH1 DEFUELING COMPLEX DESIGN\DRAWINGS\M140\SHEETS\EP-100.DWG

CIRCUIT SCHEDULE

1. M-140-3 PANEL 3 #1,3,5
2. M-140-3 PANEL 3 #7,9,11
3. M-140-3 PANEL 1 #2,4,6
4. M-140-3 PANEL 3 #13,15,17
5. M-140-3 PANEL 3 #19,21,23
6. M-140-4 PANEL 1 #2,4,6
7. M-140-3 PANEL 1 #13,15,17
8. M-140-3 PANEL 1 #19,21,23
9. M-140-3 PANEL 3 #2,4,6
10. M-140-3 PANEL 3 #8,10,12
11. M-140-3 PANEL 3 #14,16,18
12. M-140-3 PANEL 3 #20,22,24
13. M-140-3 PANEL 3 #26,28,30
14. M-140-3 PANEL 2 #1
15. M-140-4 PANEL 2 #1
16. M-140-3 PANEL 2 #6
17. M-140-4 PANEL 2 #4
18. M-140-3 PANEL 1 #8,10,12
19. M-140-3 PANEL 1 #14,16,18
20. M-140-4 PANEL 1 #8,10,12
21. M-140-4 PANEL 1 #14,16,18
22. M-140-3 PANEL 2 #27
23. M-140-3 PANEL 3 #31,33,35
24. M-140-3 PANEL 3 #37,39,41
25. M-140-3 PANEL 2 #22
26. M-140-4 PANEL 2 #14

NOTES

1. SEE SHEET E-001 FOR LEGEND, ABBREVIATIONS AND GENERAL NOTES.
2. SEE MECHANICAL SHEETS FOR EQUIPMENT DETAILS AND EXACT LOCATIONS.
3. GFCI CONVENIENCE RECEPTACLES SHALL BE FEED THRU TYPE WITH SINGLE GFCI AT START OF CIRCUIT FEEDING NON-GFCI TYPE RECEPTACLES.
4. AN ENVELOPE OF 12' WIDE AND 18' HIGH IS REQUIRED THROUGH THE M-140 GROUND LEVEL FOR THE RAILCARS. ALL BUILDING ELEMENTS AND SYSTEMS SHALL BE COORDINATED TO KEEP THE ENVELOPE CLEAR.

KEYED NOTES

1. PROVIDE LFMC FROM CARD READER GANG BOX TO INTERIOR OF ENCLOSURE. TRANSITION TO EMT WITHIN ENCLOSURE.
2. ELECTRIC HEATING COIL DISCONNECT. FURNISHED WITH SKID.
3. CONDENSING UNIT DISCONNECT. FURNISHED WITH SKID.
4. RETURN FAN DISCONNECT. FURNISHED WITH SKID.
5. RETURN FAN VFD.
6. PROVIDE DISCONNECT AND WIRE TO 100A CIRCUIT. LEAVE LOAD LUGS UNCONNECTED.
7. NEMA 3R JUNCTION BOX WITH (3) 400A LUGS FOR SERVICE CONNECTION.
8. ROOF SYSTEM MOTOR VFD
9. PROVIDE RECEPTACLE INSIDE PA SYSTEM NETWORKING CABINET
10. SKID MOUNTED CONVENIENCE RECEPTACLE. FURNISHED WITH SKID. PROVIDE 120V CIRCUIT AS INDICATED.

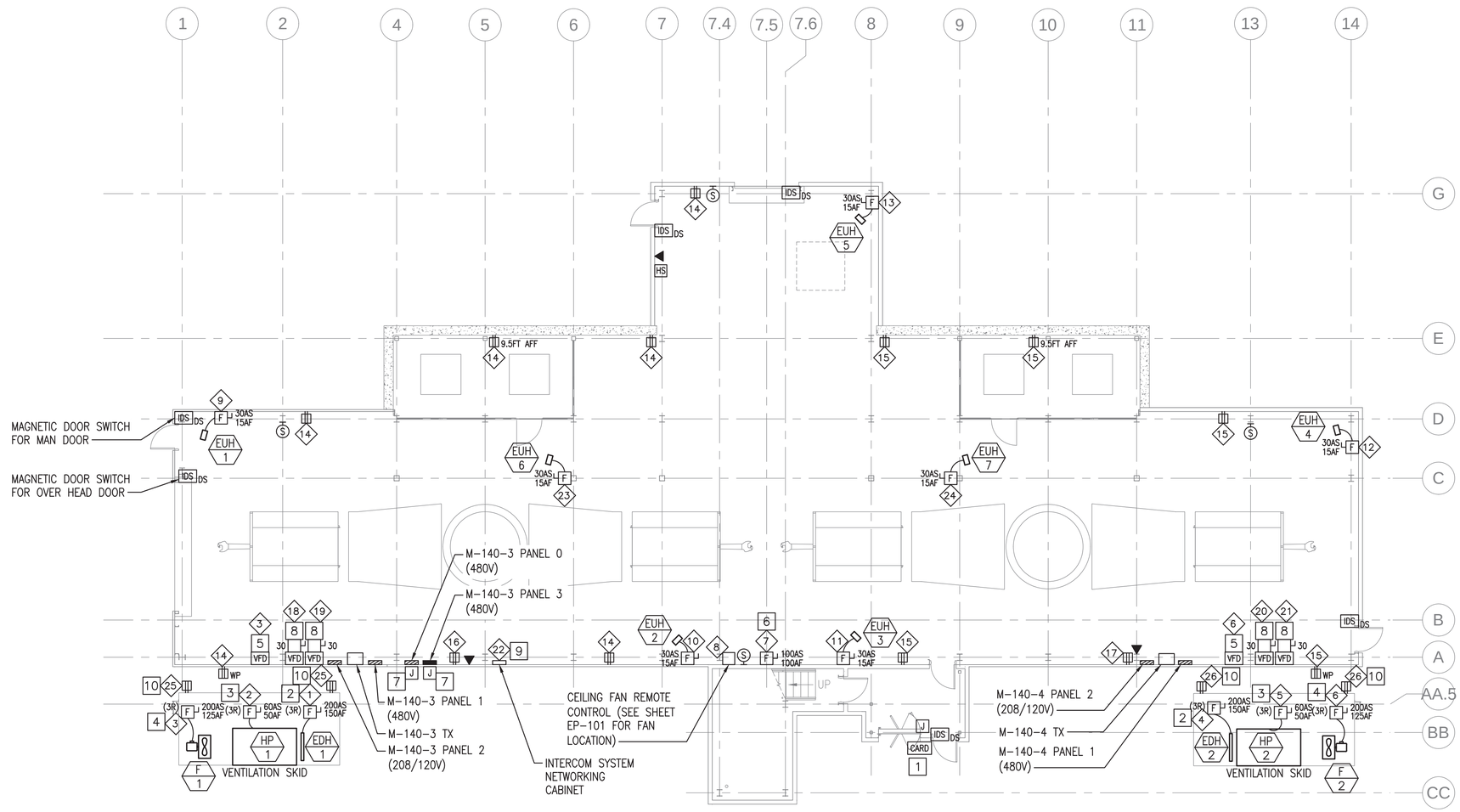

GROUND LEVEL POWER AND SYSTEMS PLAN

SCALE: 1/8" = 1'-0"

PLAN NORTH

0 4' 8' 16'
Scale: 1/8" = 1'-0"

SYM	DESCRIPTION	DATE	APPR
0	ISSUED FOR CONSTRUCTION	10/28/2016	CBC

NAVFAC

STATE OF MAINE
JASON M. BEAULIEU
No. 13441
LICENSED PROFESSIONAL ENGINEER
10/28/16
SEAL

Colby Company engineering
A/E INFO

APPROVED
David W. Thurnfeld
FOR COMMANDER NAVFAC

ACTIVITY
TIM FISHER
C. 2370.6 BRANCH HEAD

SATISFACTORY TO DATE 10/28/2016
DES JMB DRW JMB CHK MRL
PMDM PETER STOCKLESS
BRANCH MANAGER IAN BODWELL
FEAD/PM&E AMIN BAHROUR
FIRE PROTECTION PATRICK BAKAJ

DEPARTMENT OF THE NAVY
NAVAL FACILITIES ENGINEERING COMMAND
PUBLIC WORKS DEPARTMENT - MAINE
NAVAL FACILITIES ENGINEERING COMMAND ~ MID-ATLANTIC
NAVAL SHIPYARD - PORTSMOUTH, NH
PORTSMOUTH NAVAL SHIPYARD
KITTERY, ME
DRY DOCK #1 DEFUELING COMPLEX
M-140 COMPLEX
GROUND LEVEL POWER AND SYSTEMS PLAN

EPROJECT NO.: 1363311
CONSTR. CONTR. NO. N40085-17-C-5002
NAVFAC DRAWING NO. 12734941
SHEET 158 OF 188
EP-100A | DD1-16-1022

DRAWFORM REVISION: 10 OCTOBER 2014

10/28/2016 6:51:32 AM X:\297 PORTSMOUTH NAVAL SHIPYARD\297.005.001 - DD#1 DEFUELING COMPLEX DESIGN\DRAWINGS\M140\SHEETS\EP-100A.DWG

CIRCUIT SCHEDULE

1. M-140-3 PANEL 2 #3
2. M-140-4 PANEL 2 #3
3. M-140-3 PANEL 1 #19,21,23
4. M-140-3 PANEL 2 #10
5. M-140-3 PANEL 2 #12
6. M-140-4 PANEL 2 #10
7. M-140-3 PANEL 2 #20
8. M-140-4 PANEL 2 #12

NOTES

1. SEE SHEET E-001 FOR LEGEND, ABBREVIATIONS AND GENERAL NOTES.
2. SEE MECHANICAL SHEETS FOR EQUIPMENT DETAILS AND EXACT LOCATIONS.

KEYED NOTES

1. CEILING FAN CONTROLLED FROM GROUND FLOOR REMOTE CONTROL. FOLLOW ALL MANUFACTURER'S INSTALLATION INSTRUCTIONS. SEE SHEET EP-100 FOR REMOTE CONTROL LOCATION.
2. PROVIDE AND INSTALL DOOR SWITCH AND INSTALL MAGNETIC DOOR LOCK. WIRE ALL CONTROL SIGNALS TO ACE-3. PROVIDE REQUIRED POWER SUPPLIES AND COORDINATE INSTALLATION WITH MANUFACTURER'S INSTRUCTIONS.
3. PROVIDE (3) 2" CONDUIT SLEEVES THROUGH WALL AT 90" AFF.
4. DOOR SWITCH FOR ROOF HATCH.
5. PROVIDE TERMINAL BLOCK INSIDE JUNCTION BOX FOR CASUALTY PA SYSTEM SPEAKER WIRE TERMINATIONS. SPLIT SPEAKER SIGNAL FROM ACE-3 TO SPEAKERS SHOWN ON SHEET EP-104.
6. MOUNT PA HANDSET AND RECEPTACLE ON EXTERIOR WALL WITHIN THE PASSAGEWAY.

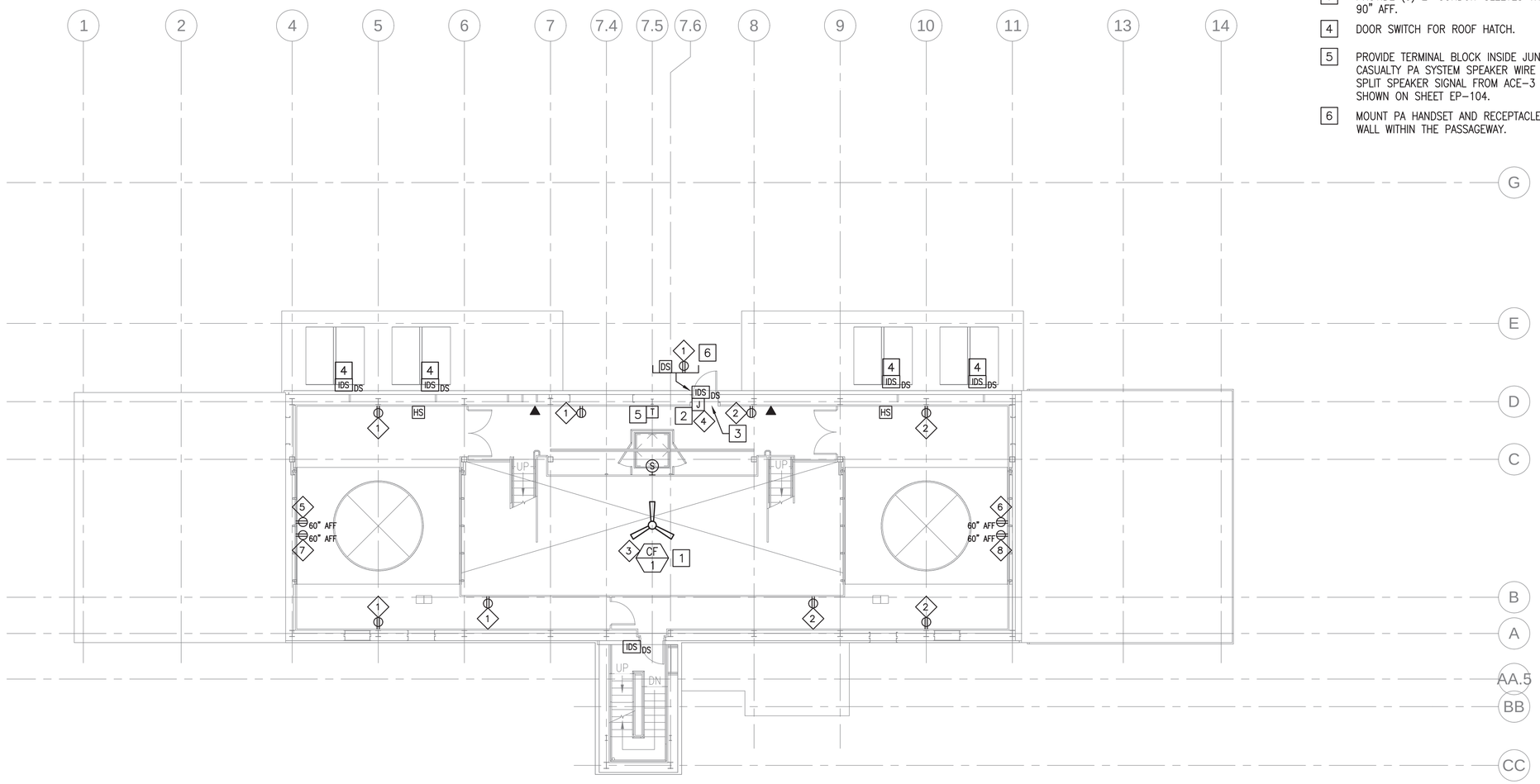

PLAN NORTH

LEVEL 1 POWER AND SYSTEMS PLAN (NO STORAGE ENCLOSURE)

SCALE: ##########

0 4' 8' 16'
Scale: 1/8" = 1'-0"

SYM	DESCRIPTION	DATE	APPR
0	ISSUED FOR CONSTRUCTION	10/28/2016	CBC

NAVFAC

STATE OF MAINE
JASON M. BEAULIEU
No. 13441
LICENSED
PROFESSIONAL ENGINEER
10/28/16
SEAL

Colby Company engineering
A/E INFO

APPROVED
David W. Thurnfeld
FOR COMMANDER NAVFAC

ACTIVITY
TIM FISHER
C. 2370.6 BRANCH HEAD

SATISFACTORY TO DATE 10/28/2016
DES JMB DRW JMB CHK MRL
PMDM PETER STOCKLESS
BRANCH MANAGER IAN BODWELL
FEAD/PM&E AMIN BAHROUR
FIRE PROTECTION PATRICK BAKAJ

DEPARTMENT OF THE NAVY
NAVAL FACILITIES ENGINEERING COMMAND
PUBLIC WORKS DEPARTMENT - MAINE

NAVAL FACILITIES ENGINEERING COMMAND ~ MID-ATLANTIC
NAVAL SHIPYARD - PORTSMOUTH, NH

PORTSMOUTH NAVAL SHIPYARD
DRY DOCK #1 DEFUELING COMPLEX
KITTERY, ME
M-140 COMPLEX

LEVEL 1 POWER AND SYSTEMS PLAN (NO STORAGE ENCLOSURE)

EPROJECT NO.: 1363311
CONSTR. CONTR. NO. N40085-17-C-5002
NAVFAC DRAWING NO. 12734942
SHEET 159 OF 188

EP-101 | DD1-16-1023

DRAWFORM REVISION: 10 OCTOBER 2014

10/28/2016 6:51:41 AM X:\297 PORTSMOUTH NAVAL SHIPYARD\297.005.001 - DD#1 DEFUELING COMPLEX DESIGN\DRAWINGS\M140\SHEETS\EP-101.DWG

CIRCUIT SCHEDULE

1. M-140-3 PANEL 2 #3
2. M-140-4 PANEL 2 #3
3. M-140-3 PANEL 1 #19,21,23
4. M-140-3 PANEL 2 #10
5. M-140-3 PANEL 2 #12
6. M-140-4 PANEL 2 #10
7. M-140-3 PANEL 2 #20
8. M-140-4 PANEL 2 #12

NOTES

1. SEE SHEET E-001 FOR LEGEND, ABBREVIATIONS AND GENERAL NOTES.
2. SEE MECHANICAL SHEETS FOR EQUIPMENT DETAILS AND EXACT LOCATIONS.

KEYED NOTES

1. CEILING FAN CONTROLLED FROM GROUND FLOOR REMOTE CONTROL. FOLLOW ALL MANUFACTURER'S INSTALLATION INSTRUCTIONS. SEE SHEET EP-100 FOR REMOTE CONTROL LOCATION.
2. PROVIDE AND INSTALL DOOR SWITCH AND INSTALL MAGNETIC DOOR LOCK. WIRE ALL CONTROL SIGNALS TO ACE-3. PROVIDE REQUIRED POWER SUPPLIES AND COORDINATE INSTALLATION WITH MANUFACTURER'S INSTRUCTIONS.
3. PROVIDE (3) 2" CONDUIT SLEEVES THROUGH WALL AT 90" AFF.
4. DOOR SWITCH FOR ROOF HATCH.
5. PROVIDE TERMINAL BLOCK INSIDE JUNCTION BOX FOR CASUALTY PA SYSTEM SPEAKER WIRE TERMINATIONS. SPLIT SPEAKER SIGNAL FROM ACE-3 TO SPEAKERS SHOWN ON SHEET EP-104.

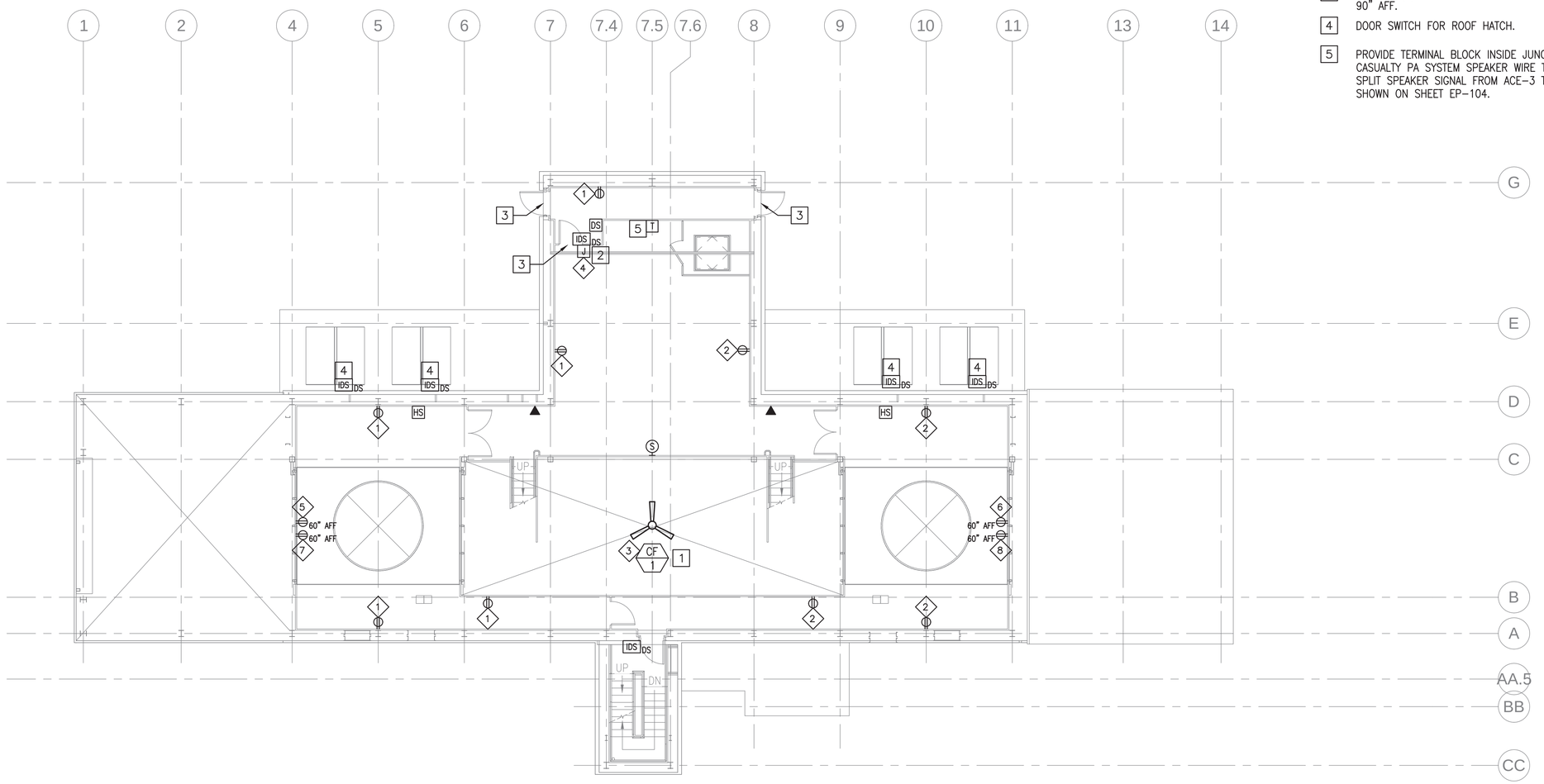

LEVEL 1 POWER AND SYSTEMS PLAN

SCALE: 1/8" = 1'-0"

PLAN NORTH

Scale: 1/8" = 1'-0"

SYM	DESCRIPTION	DATE	APPR
0	ISSUED FOR CONSTRUCTION	10/28/2016	CBC

NAVFAC

STATE OF MAINE
JASON M. BEAULIEU
No. 13441
LICENSED PROFESSIONAL ENGINEER
10/28/16
SEAL

Colby Company engineering
A/E INFO

APPROVED: David W. Thumfold
FOR COMMANDER NAVFAC

ACTIVITY: TIM FISHER
C. 2370.6 BRANCH HEAD

SATISFACTORY TO DATE 10/28/2016

DES	JMB	DRW	JMB	CHK	MRL

PM/DM: PETER STOCKLESS
BRANCH MANAGER: IAN BODWELL
FEA/PM&E: AMIN BAHROUR
FIRE PROTECTION: PATRICK BAKAJ

DEPARTMENT OF THE NAVY
NAVAL FACILITIES ENGINEERING COMMAND
PUBLIC WORKS DEPARTMENT - MAINE

NAVAL FACILITIES ENGINEERING COMMAND ~ MID-ATLANTIC
NAVAL SHIPYARD - PORTSMOUTH, NH

PORTSMOUTH NAVAL SHIPYARD
KITTERY, ME

DRY DOCK #1 DEFUELING COMPLEX
M-140 COMPLEX

LEVEL 1 POWER AND SYSTEMS PLAN

EPROJECT NO.: 1363311
CONSTR. CONTR. NO.: N40085-17-C-5002
NAVFAC DRAWING NO.: 12734943
SHEET 160 OF 188

EP-101A | DD1-16-1024

DRAWFORM REVISION: 10 OCTOBER 2014

10/28/2016 6:51:47 AM X:\297 PORTSMOUTH NAVAL SHIPYARD\297.005.001 - DD#1 DEFUELING COMPLEX DESIGN\DRAWINGS\M140\SHEETS\EP-101A.DWG

CIRCUIT SCHEDULE

1. M-140-3 PANEL 1 #7,9,11
2. M-140-4 PANEL 1 #7,9,11
3. M-140-3 PANEL 2 #5
4. M-140-4 PANEL 2 #5
5. M-140-3 PANEL 2 #2
6. M-140-3 PANEL 2 #4
7. M-140-4 PANEL 2 #2
8. M-140-3 PANEL 2 #8
9. M-140-4 PANEL 2 #6
10. M-140-4 PANEL 2 #8

NOTES

1. SEE SHEET E-001 FOR LEGEND, ABBREVIATIONS AND GENERAL NOTES.

KEYED NOTES

1. PROVIDE (3) 2" CONDUIT SLEEVES THROUGH WALL AT 90" AFF.
2. PROVIDE (1) 2" CONDUIT SLEEVE TO LEVEL 1 BELOW. SEE ARCHITECTURAL DETAILS C1 AND C2 ON SHEET A-507.
3. PROVIDE (1) 3/4" CONDUIT AND JUNCTION BOX FOR CRANE OPERATOR CONTROLS PENDANT RECEPTACLE. COORDINATE WITH CRANE CONTRACTOR FOR INSTALLATION REQUIREMENTS.

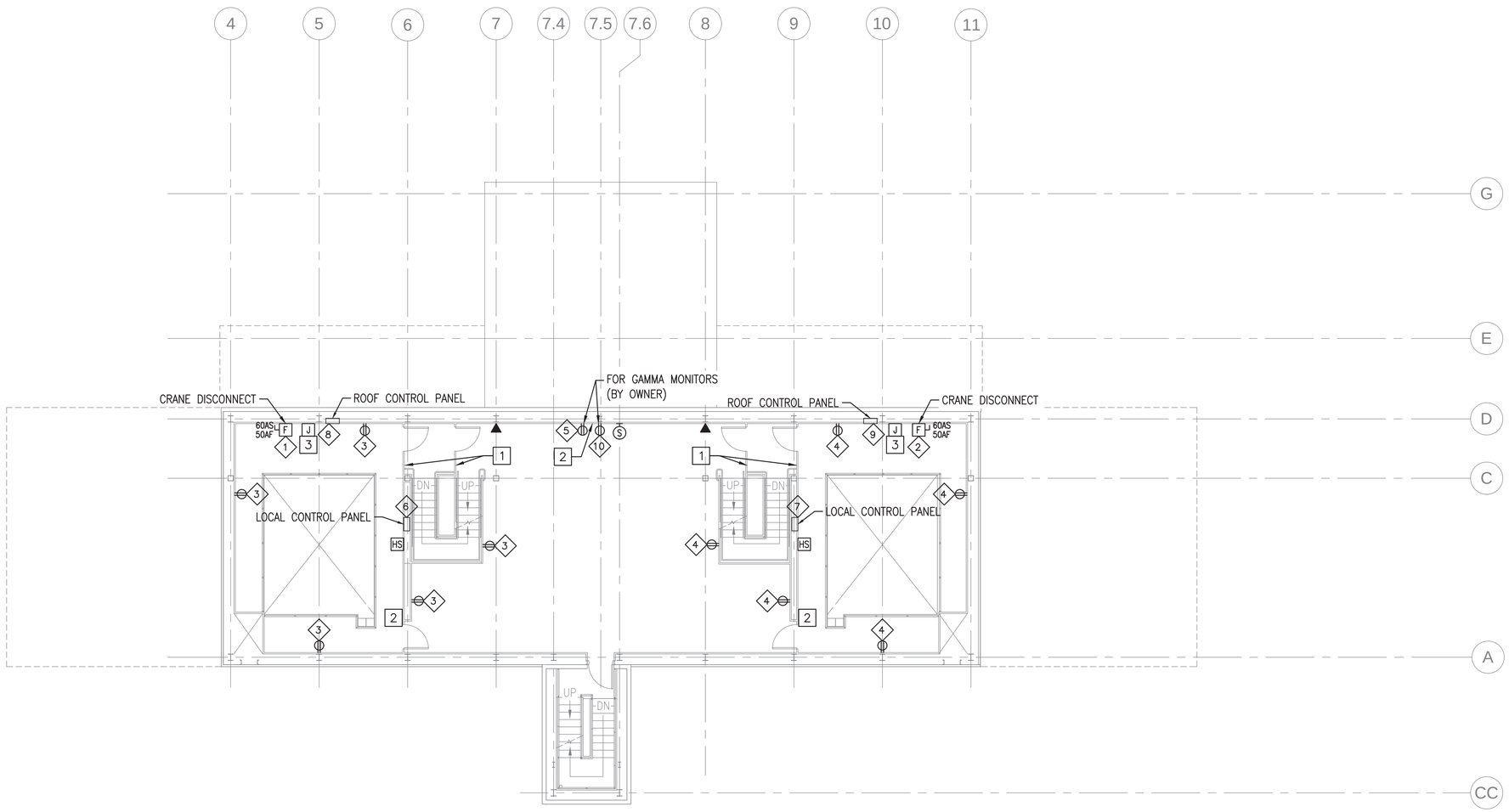

LEVEL 2 POWER AND SYSTEMS PLAN

SCALE: 1/8" = 1'-0"

PLAN NORTH

0 4' 8' 16'
Scale: 1/8" = 1'-0"

SYM	DESCRIPTION	DATE	APPR
0	ISSUED FOR CONSTRUCTION	10/28/2016	CBC

NAVFAC

STATE OF MAINE
JASON M. BEAULIEU
No. 13441
LICENSED
PROFESSIONAL ENGINEER
10/28/16
SEAL

Colby Company engineering
A/E INFO

APPROVED
David W. Grunfeld
FOR COMMANDER NAVFAC

ACTIVITY
TIM FISHER
C. 2370.6 BRANCH HEAD

SATISFACTORY TO DATE 10/28/2016

DES JMB | DRW JMB | CHK MRL

PMDM PETER STOCKLESS
BRANCH MANAGER IAN BODWELL
FEAD/PM&E AMIN BAHROUR
FIRE PROTECTION PATRICK BAKAJ

DEPARTMENT OF THE NAVY
NAVAL FACILITIES ENGINEERING COMMAND
PUBLIC WORKS DEPARTMENT - MAINE

NAVAL FACILITIES ENGINEERING COMMAND ~ MID-ATLANTIC
NAVAL SHIPYARD - PORTSMOUTH, NH

PORTSMOUTH NAVAL SHIPYARD
KITTERY, ME

DRY DOCK #1 DEFUELING COMPLEX
M-140 COMPLEX

LEVEL 2 POWER AND SYSTEMS PLAN

EPROJECT NO.: 1363311

CONSTR. CONTR. NO.
N40085-17-C-5002

NAVFAC DRAWING NO.
12734944

SHEET 161 OF 188

EP-102 | DD1-16-1025

DRAWFORM REVISION: 10 OCTOBER 2014

10/28/2016 6:51:52 AM X:\297 PORTSMOUTH NAVAL SHIPYARD\297.005.001 - DD#1 DEFUELING COMPLEX DESIGN\DRAWINGS\M140\SHEETS\EP-102.DWG

CIRCUIT SCHEDULE

1. M-140-3 PANEL 2 #7
2. M-140-4 PANEL 2 #7
3. M-140-3 PANEL 3 #32,34,36

NOTES

1. SEE SHEET E-001 FOR LEGEND, ABBREVIATIONS AND GENERAL NOTES.

KEYED NOTES

1. DOOR SWITCH FOR ROOF HATCH.
2. PROVIDE DOOR SWITCH AT DOOR AT TOP OF STAIRWAY. SEE SHEET A-104 FOR DOOR LOCATION.
3. PROVIDE (3) 2" CONDUIT SLEEVES THROUGH WALL AT 90" AFF.

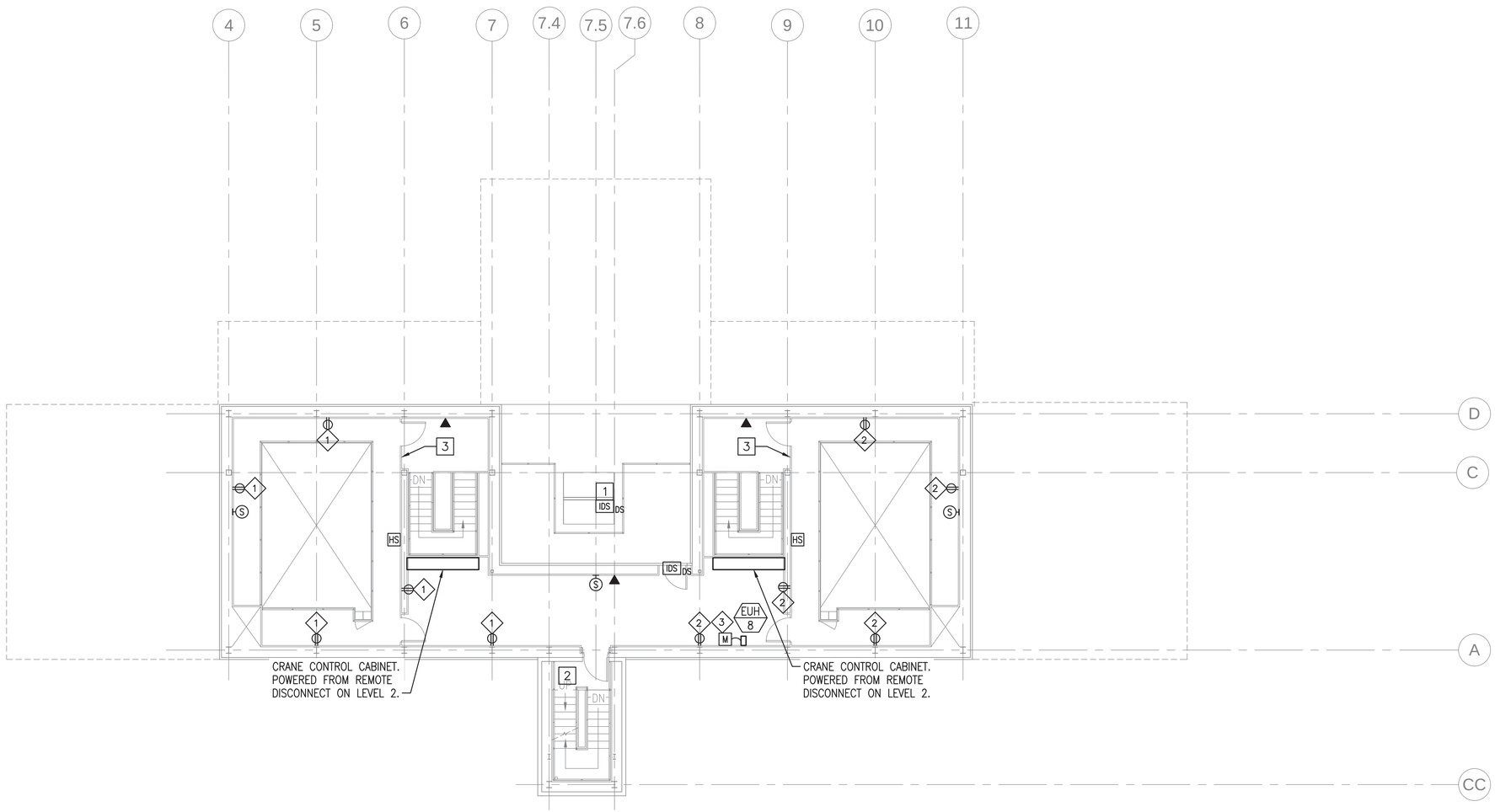

LEVEL 3 POWER AND SYSTEMS PLAN

SCALE: 1/8" = 1'-0"

PLAN NORTH

0 4' 8' 16'
Scale: 1/8" = 1'-0"

SYM	DESCRIPTION	DATE	APPR
0	ISSUED FOR CONSTRUCTION	10/28/2016	CBC

STATE OF MAINE
JASON M. BEAULIEU
No. 13441
LICENSED PROFESSIONAL ENGINEER
10/28/16
SEAL

Colby Company engineering
A/E INFO

APPROVED
Baird W. Grunfeld
FOR COMMANDER NAVFAC

ACTIVITY
TIM FISHER
C. 2370.6 BRANCH HEAD

SATISFACTORY TO DATE 10/28/2016
DES JMB DRW JMB CHK MRL
PMDM PETER STOCKLESS
BRANCH MANAGER IAN BODWELL
FEAD/PM&E AMIN BAHROUR
FIRE PROTECTION PATRICK BAKAJ

DEPARTMENT OF THE NAVY
NAVAL FACILITIES ENGINEERING COMMAND
PUBLIC WORKS DEPARTMENT - MAINE
NAVAL FACILITIES ENGINEERING COMMAND ~ MID-ATLANTIC
NAVAL SHIPYARD - PORTSMOUTH, NH
PORTSMOUTH NAVAL SHIPYARD
DRY DOCK #1 DEFUELING COMPLEX
M-140 COMPLEX
KITTERY, ME
LEVEL 3 POWER AND SYSTEMS PLAN

EPROJECT NO.: 1363311
CONSTR. CONTR. NO. N40085-17-C-5002
NAVFAC DRAWING NO. 12734945
SHEET 162 OF 188

EP-103 | DD1-16-1026

DRAWFORM REVISION: 10 OCTOBER 2014

10/28/2016 6:51:57 AM X:\297 PORTSMOUTH NAVAL SHIPYARD\297.005.001 - DD#1 DEFUELING COMPLEX DESIGN\DRAWINGS\M140\SHEETS\EP-103.DWG

CIRCUIT SCHEDULE

1. M-140-3 PANEL 1 #8,10,12
2. M-140-3 PANEL 1 #14,16,18
3. M-140-4 PANEL 1 #8,10,12
4. M-140-4 PANEL 1 #14,16,18
5. M-140-3 PANEL 2 #9
6. M-140-4 PANEL 2 #9

NOTES

1. SEE SHEET E-001 FOR LEGEND, ABBREVIATIONS AND GENERAL NOTES.
2. SEE MECHANICAL SHEETS FOR EQUIPMENT DETAILS AND EXACT LOCATIONS.
3. DO NOT INSTALL EQUIPMENT OR CONDUIT EXPOSED ON UNDERSIDE OF ROOF STRUCTURE OR IN ANY LOCATION THAT WILL INTERFERE WITH ROOF OPERATION OR ENCROACH UPON CLEAR SPACE OF ROOF OPENING.

KEYED NOTES

1. EXTERIOR RATED LOUD SPEAKERS FOR CASUALTY PA SYSTEM.
2. ROOF PANEL SECURITY SWITCHES. SEE SHEET E-505 FOR INSTALLATION DETAILS.

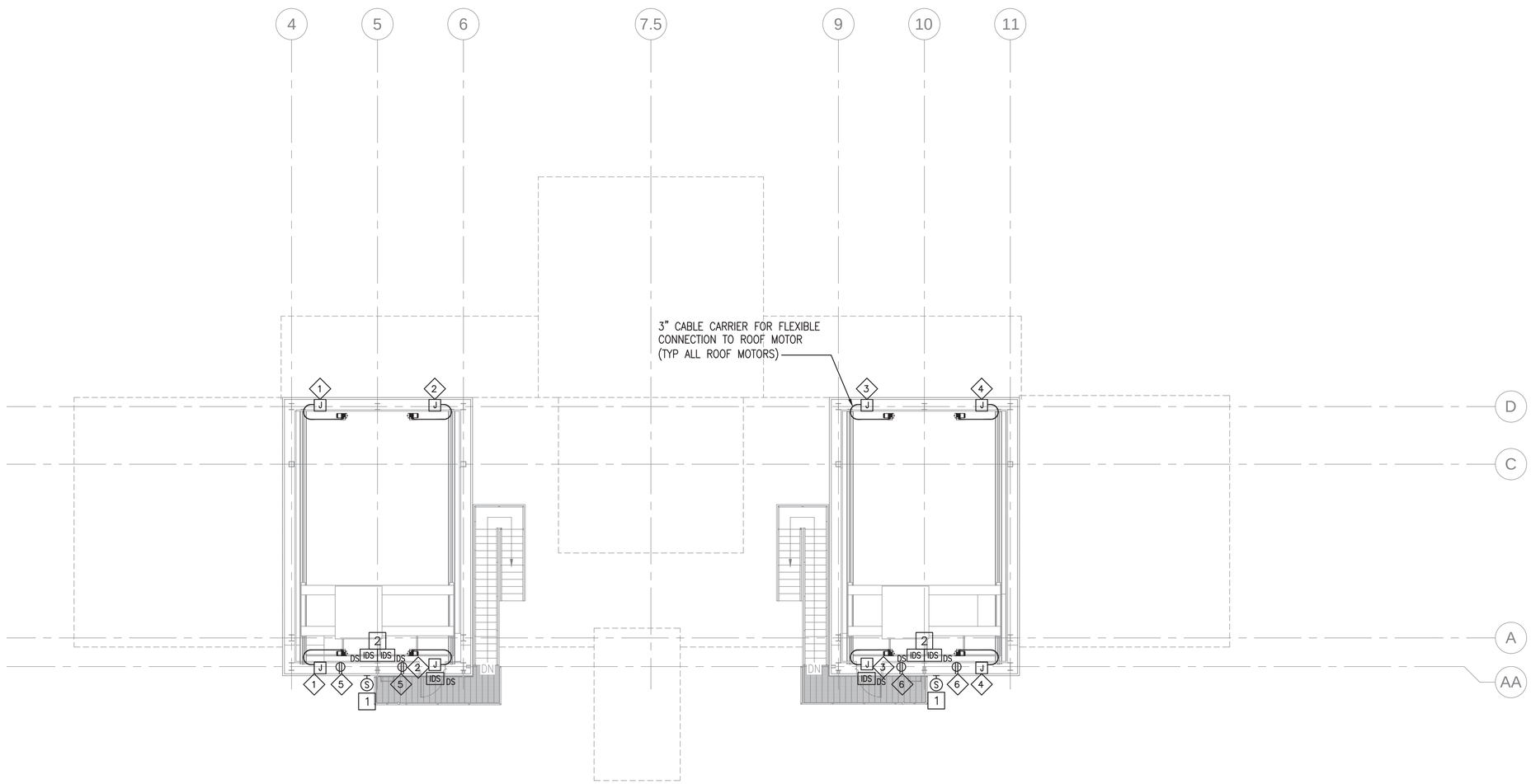

CRANE LEVEL POWER AND SYSTEMS PLAN

SCALE: 1/8" = 1'-0"

PLAN NORTH

0 4' 8' 16'
Scale: 1/8" = 1'-0"

SYM	DESCRIPTION	DATE	APPR
0	ISSUED FOR CONSTRUCTION	10/28/2016	CBC

NAVFAC

STATE OF MAINE
JASON M. BEAULIEU
No. 13441
LICENSED PROFESSIONAL ENGINEER
10/28/16
SEAL

Colby Company engineering
A/E INFO

APPROVED
David W. Thurnfeld
FOR COMMANDER NAVFAC

ACTIVITY
TIM FISHER
C. 2370.6 BRANCH HEAD

SATISFACTORY TO DATE 10/28/2016

DES JMB | DRW JMB | CHK MRL

PMDM PETER STOCKLESS
BRANCH MANAGER IAN BODWELL
FEAD/PM&E AMIN BAHROUR
FIRE PROTECTION PATRICK BAKAJ

DEPARTMENT OF THE NAVY
NAVAL FACILITIES ENGINEERING COMMAND
PUBLIC WORKS DEPARTMENT - MAINE

NAVAL FACILITIES ENGINEERING COMMAND ~ MID-ATLANTIC
NAVAL SHIPYARD - PORTSMOUTH, NH

PORTSMOUTH NAVAL SHIPYARD
KITTERY, ME

DRY DOCK #1 DEFUELING COMPLEX
M-140 COMPLEX

CRANE LEVEL POWER AND SYSTEMS PLAN

EPROJECT NO.: 1363311

CONSTR. CONTR. NO.
N40085-17-C-5002

NAVFAC DRAWING NO.
12734946

SHEET 163 OF 188

EP-104 | DD1-16-1027

DRAWFORM REVISION: 10 OCTOBER 2014

10/28/2016 6:52:02 AM X:\297 PORTSMOUTH NAVAL SHIPYARD\297.005.001 - DD#1 DEFUELING COMPLEX DESIGN\DRAWINGS\M140\SHEETS\EP-104.DWG

CIRCUIT SCHEDULE

1. M-140-3 PANEL 2 #11
2. M-140-4 PANEL 2 #11
3. M-140-3 PANEL 2 #21
4. M-140-4 PANEL 2 #21
5. M-140-3 PANEL 2 #25

NOTES

1. SEE SHEET E-001 FOR LEGEND, ABBREVIATIONS AND GENERAL NOTES.
2. SEE SHEET E-602 FOR LIGHT FIXTURE SCHEDULE.
3. HOOKS TO BE INSTALLED IN METAL PANELED WALLS FOR LIGHT FIXTURE SUPPORT. COORDINATE WITH ARCHITECTURAL DETAIL C4 ON SHEET A-506.
4. AN ENVELOPE OF 12' WIDE AND 18' HIGH IS REQUIRED THROUGH THE M-140 GROUND LEVEL FOR THE RAILCARS. ALL BUILDING ELEMENTS AND SYSTEMS SHALL BE COORDINATED TO KEEP THE ENVELOPE CLEAR.

KEYED NOTES

1. PROVIDE SWITCHED RECEPTACLE FOR CORDED PORTABLE WORK LIGHTING. MOUNT RECEPTACLE 7FT AFF. CONTROL RECEPTACLE THROUGH LOCAL CONTROL PANEL.
2. PROVIDE SWITCHED RECEPTACLE FOR CORDED PORTABLE WORK LIGHTING. MOUNT RECEPTACLE 7FT AFF. CONTROL RECEPTACLE THROUGH 3-WAY LIGHT SWITCHES AT MAN DOORS.
3. MOUNT LIGHTS 12FT AFF.
4. STAIRWELL LIGHTS POWERED FROM RECEPTACLE ON LEVEL 1. SEE SHEET EL-101.

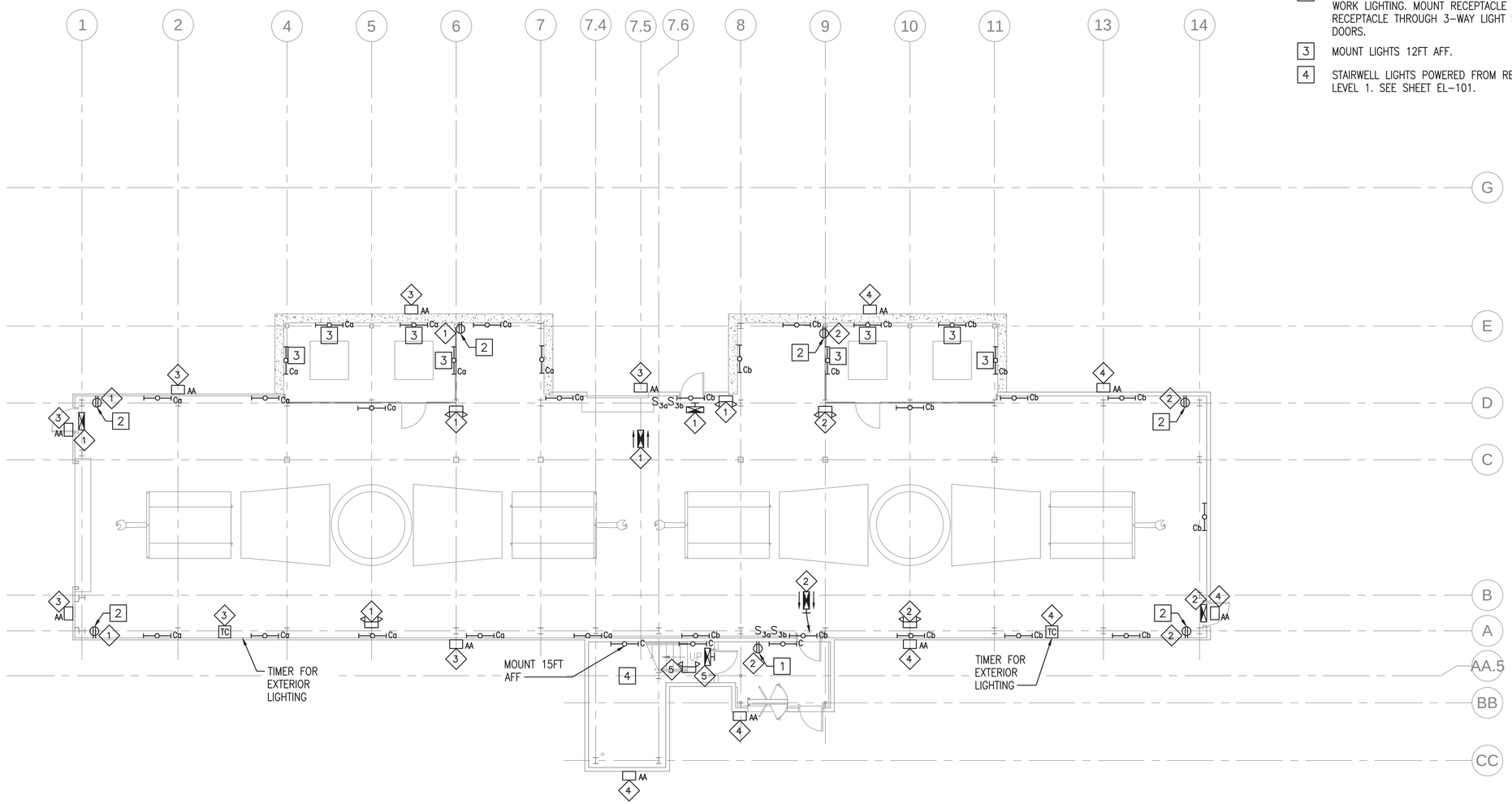

GROUND LEVEL LIGHTING PLAN (NO STORAGE ENCLOSURE)

SCALE: 1/8" = 1'-0"

PLAN NORTH

0 4' 8' 16'
Scale: 1/8" = 1'-0"

SYM	DESCRIPTION	DATE	APPR
0	ISSUED FOR CONSTRUCTION	10/28/2016	CBC

NAVFAC

STATE OF MAINE
JASON M. BEAULIEU
No. 13441
LICENSED PROFESSIONAL ENGINEER
10/28/16
SEAL

Colby Company engineering
A/E INFO

APPROVED
David W. Thurnfeld
FOR COMMANDER NAVFAC

ACTIVITY
TIM FISHER
C. 2370.6 BRANCH HEAD

SATISFACTORY TO DATE 10/28/2016

DES JMB | DRW JMB | CHK MRL

PMDM PETER STOCKLESS
BRANCH MANAGER IAN BODWELL
FEAD/PM&E AMIN BAHROUR
FIRE PROTECTION PATRICK BAKAJ

DEPARTMENT OF THE NAVY
NAVAL FACILITIES ENGINEERING COMMAND
PUBLIC WORKS DEPARTMENT - MAINE

NAVAL FACILITIES ENGINEERING COMMAND ~ MID-ATLANTIC
NAVAL SHIPYARD - PORTSMOUTH, NH

PORTSMOUTH NAVAL SHIPYARD
KITTERY, ME

DRY DOCK #1 DEFUELING COMPLEX
M-140 COMPLEX

GROUND LEVEL LIGHTING PLAN (NO STORAGE ENCLOSURE)

EPROJECT NO.: 1363311

CONSTR. CONTR. NO.
N40085-17-C-5002

NAVFAC DRAWING NO.
12734947

SHEET 164 OF 188

EL-100 | DD1-16-1028

DRAWFORM REVISION: 10 OCTOBER 2014

10/28/2016 6:52:07 AM X:\297 PORTSMOUTH NAVAL SHIPYARD\297.005.001 - DD#1 DEFUELING COMPLEX DESIGN\DRAWINGS\M140\SHEETS\EL-100.DWG

CIRCUIT SCHEDULE

1. M-140-3 PANEL 2 #11
2. M-140-4 PANEL 2 #11
3. M-140-3 PANEL 2 #21
4. M-140-4 PANEL 2 #21
5. M-140-3 PANEL 2 #25

NOTES

1. SEE SHEET E-001 FOR LEGEND, ABBREVIATIONS AND GENERAL NOTES.
2. SEE SHEET E-602 FOR LIGHT FIXTURE SCHEDULE.
3. HOOKS TO BE INSTALLED IN METAL PANELED WALLS FOR LIGHT FIXTURE SUPPORT. COORDINATE WITH ARCHITECTURAL DETAIL C4 ON SHEET A-506.
4. AN ENVELOPE OF 12' WIDE AND 18' HIGH IS REQUIRED THROUGH THE M-140 GROUND LEVEL FOR THE RAILCARS. ALL BUILDING ELEMENTS AND SYSTEMS SHALL BE COORDINATED TO KEEP THE ENVELOPE CLEAR.

KEYED NOTES

1. PROVIDE SWITCHED RECEPTACLE FOR CORDED PORTABLE WORK LIGHTING. MOUNT RECEPTACLE 7FT AFF. CONTROL RECEPTACLE THROUGH LOCAL CONTROL PANEL.
2. PROVIDE SWITCHED RECEPTACLE FOR CORDED PORTABLE WORK LIGHTING. MOUNT RECEPTACLE 7FT AFF. CONTROL RECEPTACLE THROUGH 3-WAY LIGHT SWITCHES AT MAN DOORS.
3. MOUNT LIGHTS 12FT AFF.
4. STAIRWELL LIGHTS POWERED FROM RECEPTACLE ON LEVEL 1. SEE SHEET EL-101.

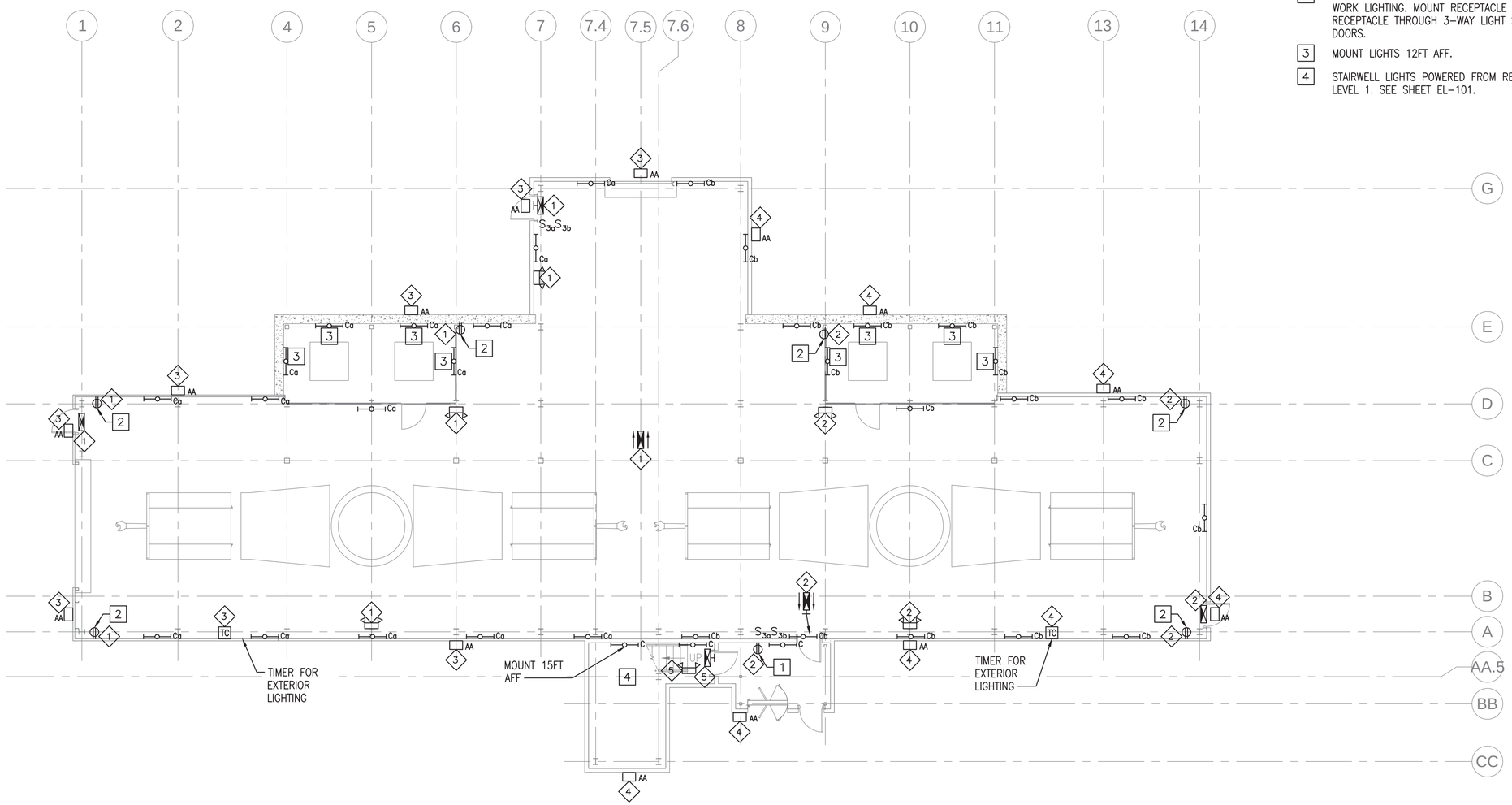

GROUND LEVEL LIGHTING PLAN

SCALE: 1/8" = 1'-0"

PLAN NORTH

0 4' 8' 16'
Scale: 1/8" = 1'-0"

SYM	DESCRIPTION	DATE	APPR
0	ISSUED FOR CONSTRUCTION	10/28/2016	CBC

NAVFAC

STATE OF MAINE
JASON M. BEAULIEU
No. 13441
LICENSED PROFESSIONAL ENGINEER
10/28/16
SEAL

Colby Company engineering
A/E INFO

APPROVED
David W. Thurnfeld
FOR COMMANDER NAVFAC

ACTIVITY
TIM FISHER
C. 2370.6 BRANCH HEAD

SATISFACTORY TO DATE 10/28/2016

DES JMB | DRW JMB | CHK MRL

PMDM PETER STOCKLESS
BRANCH MANAGER IAN BODWELL
FEAD/PM&E AMIN BAHROUR
FIRE PROTECTION PATRICK BAKAJ

DEPARTMENT OF THE NAVY
NAVAL FACILITIES ENGINEERING COMMAND
PUBLIC WORKS DEPARTMENT - MAINE

NAVAL FACILITIES ENGINEERING COMMAND ~ MID-ATLANTIC
NAVAL SHIPYARD - PORTSMOUTH, NH

PORTSMOUTH NAVAL SHIPYARD
KITTERY, ME

DRY DOCK #1 DEFUELING COMPLEX
M-140 COMPLEX

GROUND LEVEL LIGHTING PLAN

EPROJECT NO.: 1363311

CONSTR. CONTR. NO.
N40085-17-C-5002

NAVFAC DRAWING NO.
12734948

SHEET 165 OF 188

EL-100A | DD1-16-1029

DRAWFORM REVISION: 10 OCTOBER 2014

10/28/2016 6:52:12 AM X:\297 PORTSMOUTH NAVAL SHIPYARD\297.005.001 - DD#1 DEFUELING COMPLEX DESIGN\DRAWINGS\M140\SHEETS\EL-100A.DWG

CIRCUIT SCHEDULE

1. M-140-3 PANEL 2 #13
2. M-140-4 PANEL 2 #13
3. M-140-3 PANEL 2 #25

NOTES

1. SEE SHEET E-001 FOR LEGEND, ABBREVIATIONS AND GENERAL NOTES.
2. SEE SHEET E-602 FOR LIGHT FIXTURE SCHEDULE.
3. HOOKS TO BE INSTALLED IN METAL PANELED WALLS FOR LIGHT FIXTURE SUPPORT. COORDINATE WITH ARCHITECTURAL DETAIL C4 ON SHEET A-506.

KEYED NOTES

1. MOUNT LIGHT FIXTURE 8FT ABOVE STAIR LANDING.
2. PROVIDE SWITCHED RECEPTACLE FOR CORDED PORTABLE WORK LIGHTING. MOUNT RECEPTACLE 7FT AFF. CONTROL RECEPTACLE THROUGH LOCAL CONTROL PANEL.

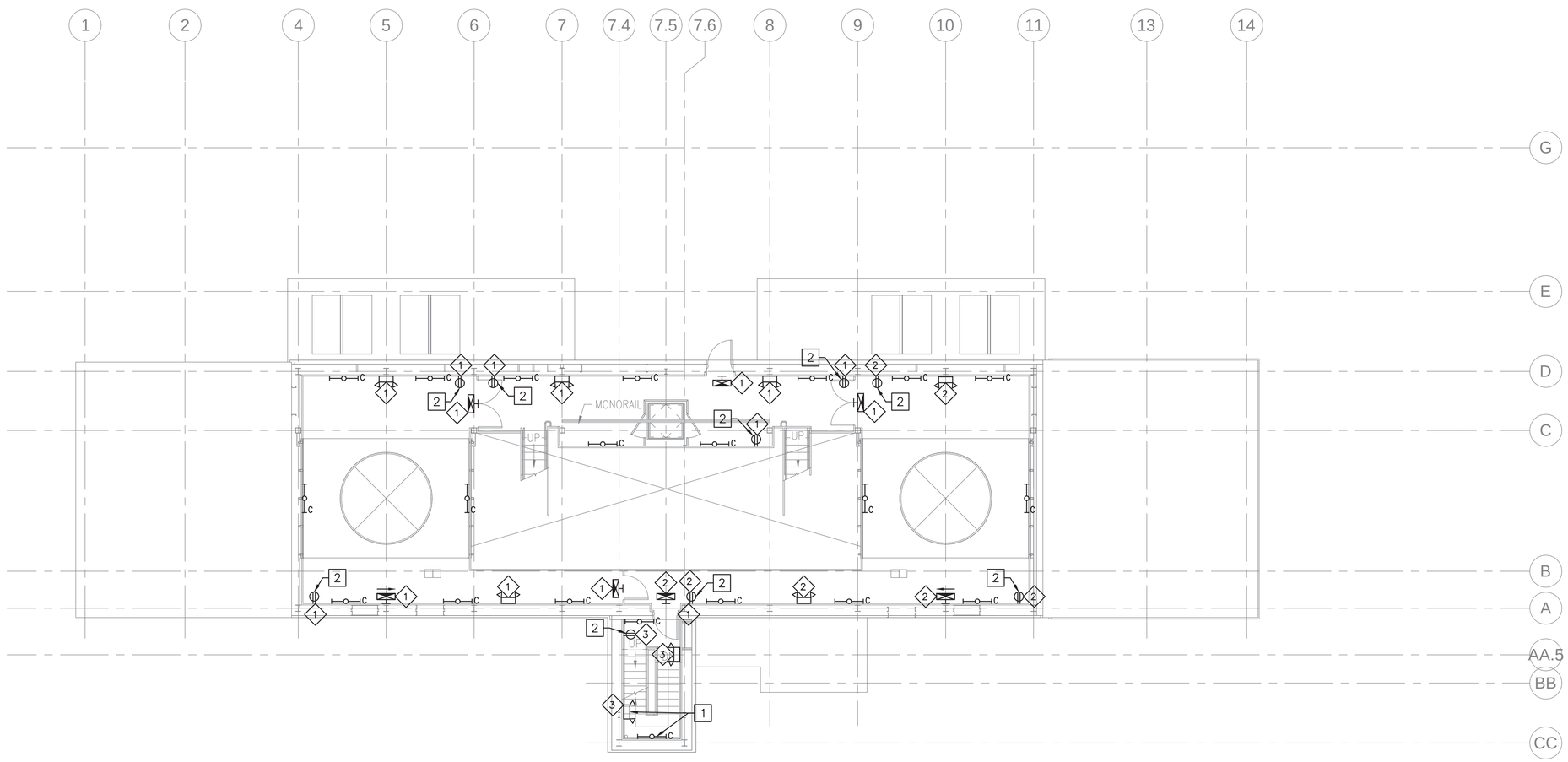

LEVEL 1 LIGHTING PLAN (NO STORAGE ENCLOSURE)

SCALE: 1/8" = 1'-0"

PLAN NORTH

0 4' 8' 16'
Scale: 1/8" = 1'-0"

SYM	DESCRIPTION	DATE	APPR
0	ISSUED FOR CONSTRUCTION	10/28/2016	CBC

NAVFAC

STATE OF MAINE
JASON M. BEAULIEU
No. 13441
LICENSED
PROFESSIONAL ENGINEER
10/28/16
SEAL

Colby Company engineering
A/E INFO

APPROVED
David W. Thurnfeld
FOR COMMANDER NAVFAC

ACTIVITY
TIM FISHER
C. 2370.6 BRANCH HEAD

SATISFACTORY TO DATE 10/28/2016
DES JMB DRW JMB CHK MRL
PMDM PETER STOCKLESS
BRANCH MANAGER IAN BODWELL
FEAD/PM&E AMIN BAHROUR
FIRE PROTECTION PATRICK BAKAJ

DEPARTMENT OF THE NAVY
NAVAL FACILITIES ENGINEERING COMMAND
PUBLIC WORKS DEPARTMENT - MAINE
NAVAL FACILITIES ENGINEERING COMMAND ~ MID-ATLANTIC
NAVAL SHIPYARD - PORTSMOUTH, NH
PORTSMOUTH NAVAL SHIPYARD
KITTERY, ME
DRY DOCK #1 DEFUELING COMPLEX
M-140 COMPLEX
LEVEL 1 LIGHTING PLAN (NO STORAGE ENCLOSURE)

EPROJECT NO.: 1363311
CONSTR. CONTR. NO. N40085-17-C-5002
NAVFAC DRAWING NO. 12734949
SHEET 166 OF 188
EL-101 DD1-16-1030

DRAWFORM REVISION: 10 OCTOBER 2014

10/28/2016 6:52:17 AM X:\297 PORTSMOUTH NAVAL SHIPYARD\297.005.001 - DD#1 DEFUELING COMPLEX DESIGN\DRAWINGS\M140\SHEETS\EL-101.DWG

CIRCUIT SCHEDULE

1. M-140-3 PANEL 2 #13
2. M-140-4 PANEL 2 #13
3. M-140-3 PANEL 2 #25

NOTES

1. SEE SHEET E-001 FOR LEGEND, ABBREVIATIONS AND GENERAL NOTES.
2. SEE SHEET E-602 FOR LIGHT FIXTURE SCHEDULE.
3. HOOKS TO BE INSTALLED IN METAL PANELED WALLS FOR LIGHT FIXTURE SUPPORT. COORDINATE WITH ARCHITECTURAL DETAIL C4 ON SHEET A-506.

KEYED NOTES

1. MOUNT LIGHT FIXTURE 8FT ABOVE STAIR LANDING.
2. PROVIDE SWITCHED RECEPTACLE FOR CORDED PORTABLE WORK LIGHTING. MOUNT RECEPTACLE 7FT AFF. CONTROL RECEPTACLE THROUGH LOCAL CONTROL PANEL.
3. PROVIDE SWITCHED RECEPTACLE FOR CORDED PORTABLE WORK LIGHTING. MOUNT RECEPTACLE 7FT AFF. CONTROL RECEPTACLE THROUGH 3-WAY SWITCHES AT PASSAGEWAY DOORS.
4. PROVIDE SWITCHED RECEPTACLE FOR CORDED PORTABLE WORK LIGHTING. MOUNT RECEPTACLE 7FT AFF. CONTROL RECEPTACLE THROUGH STORAGE AREA LOCAL SWITCH.

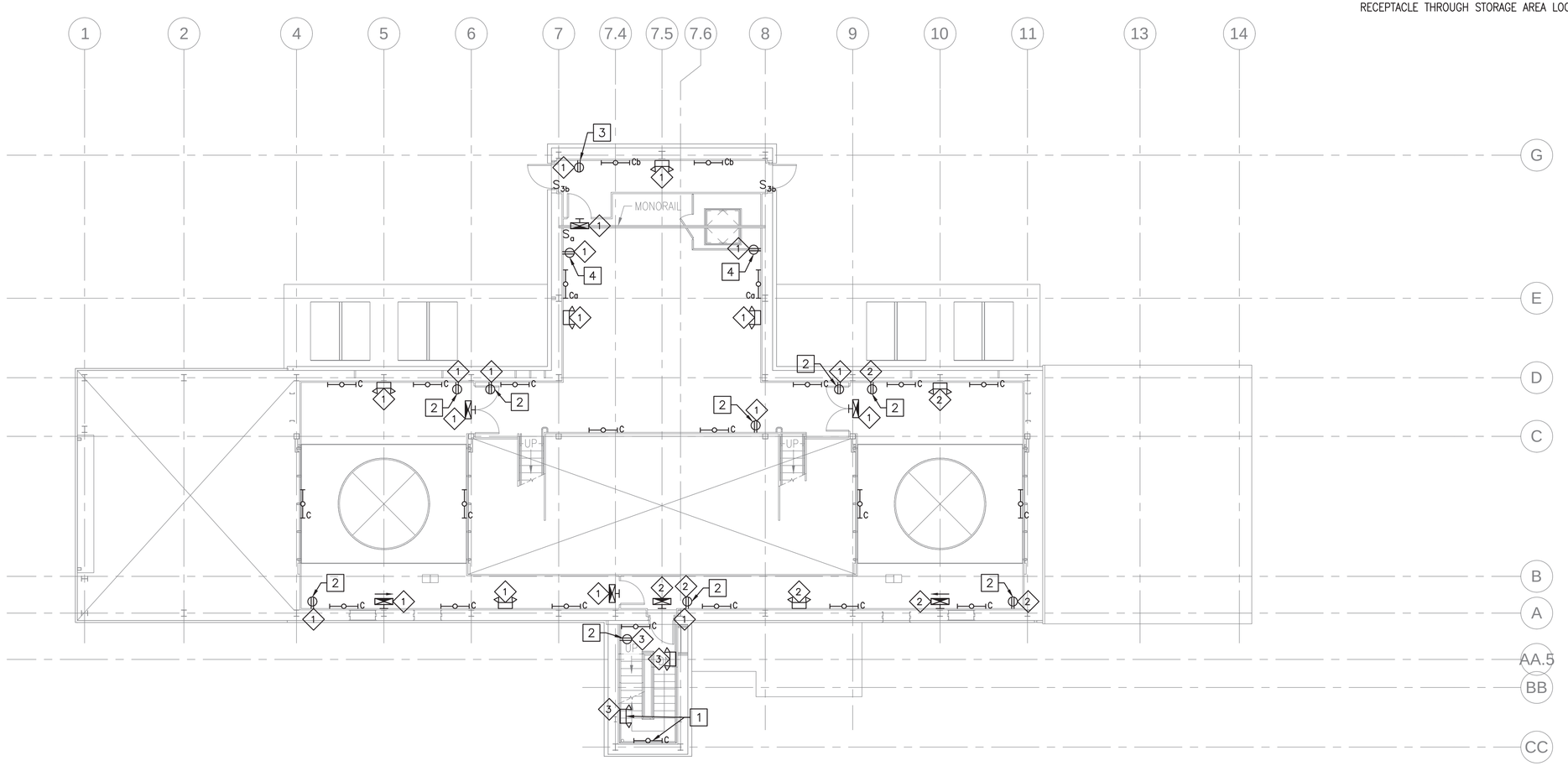

LEVEL 1 LIGHTING PLAN

SCALE: 1/8" = 1'-0"

PLAN NORTH

0 4' 8' 16'
Scale: 1/8" = 1'-0"

SYM	DESCRIPTION	DATE	APPR
0	ISSUED FOR CONSTRUCTION	10/28/2016	CBC

NAVFAC

STATE OF MAINE
JASON M. BEAULIEU
No. 13441
LICENSED PROFESSIONAL ENGINEER
10/28/16
SEAL

Colby Company engineering
A/E INFO

APPROVED
David W. Thurnfield
FOR COMMANDER NAVFAC

ACTIVITY
TIM FISHER
C. 2370.6 BRANCH HEAD

SATISFACTORY TO DATE 10/28/2016

DES	DRW	CHK
JMB	JMB	MRL

PMDM PETER STOCKLESS
BRANCH MANAGER IAN BODWELL
FEAD/PM&E AMIN BAHROUR
FIRE PROTECTION PATRICK BAKAJ

DEPARTMENT OF THE NAVY
NAVAL FACILITIES ENGINEERING COMMAND
PUBLIC WORKS DEPARTMENT - MAINE

NAVAL FACILITIES ENGINEERING COMMAND ~ MID-ATLANTIC
NAVAL SHIPYARD - PORTSMOUTH, NH

PORTSMOUTH NAVAL SHIPYARD
KITTERY, ME

DRY DOCK #1 DEFUELING COMPLEX
M-140 COMPLEX

LEVEL 1 LIGHTING PLAN

EPROJECT NO.: 1363311
CONSTR. CONTR. NO. N40085-17-C-5002
NAVFAC DRAWING NO. 12734950
SHEET 167 OF 188

EL-101A | DD1-16-1031

DRAWFORM REVISION: 10 OCTOBER 2014

10/28/2016 6:52:21 AM X:\297 PORTSMOUTH NAVAL SHIPYARD\297.005.001 - DD#1 DEFUELING COMPLEX DESIGN\DRAWINGS\M140\SHEETS\EL-101A.DWG

CIRCUIT SCHEDULE

1. M-140-3 PANEL 2 #15
2. M-140-4 PANEL 2 #15
3. M-140-3 PANEL 2 #23
4. M-140-4 PANEL 2 #23
5. M-140-3 PANEL 2 #25

NOTES

1. SEE SHEET E-001 FOR LEGEND, ABBREVIATIONS AND GENERAL NOTES.
2. SEE SHEET E-602 FOR LIGHT FIXTURE SCHEDULE.
3. HOOKS TO BE INSTALLED IN METAL PANELED WALLS FOR LIGHT FIXTURE SUPPORT. COORDINATE WITH ARCHITECTURAL DETAIL C4 ON SHEET A-506.

KEYED NOTES

1. MOUNT LIGHT FIXTURE 8FT ABOVE STAIR LANDING.
2. PROVIDE SWITCHED RECEPTACLE FOR CORDED PORTABLE WORK LIGHTING. MOUNT RECEPTACLE 7FT AFF. CONTROL RECEPTACLE THROUGH LOCAL CONTROL PANEL.
3. STAIRWELL LIGHTS POWERED FROM RECEPTACLE ON LEVEL 1. SEE SHEET EL-101.

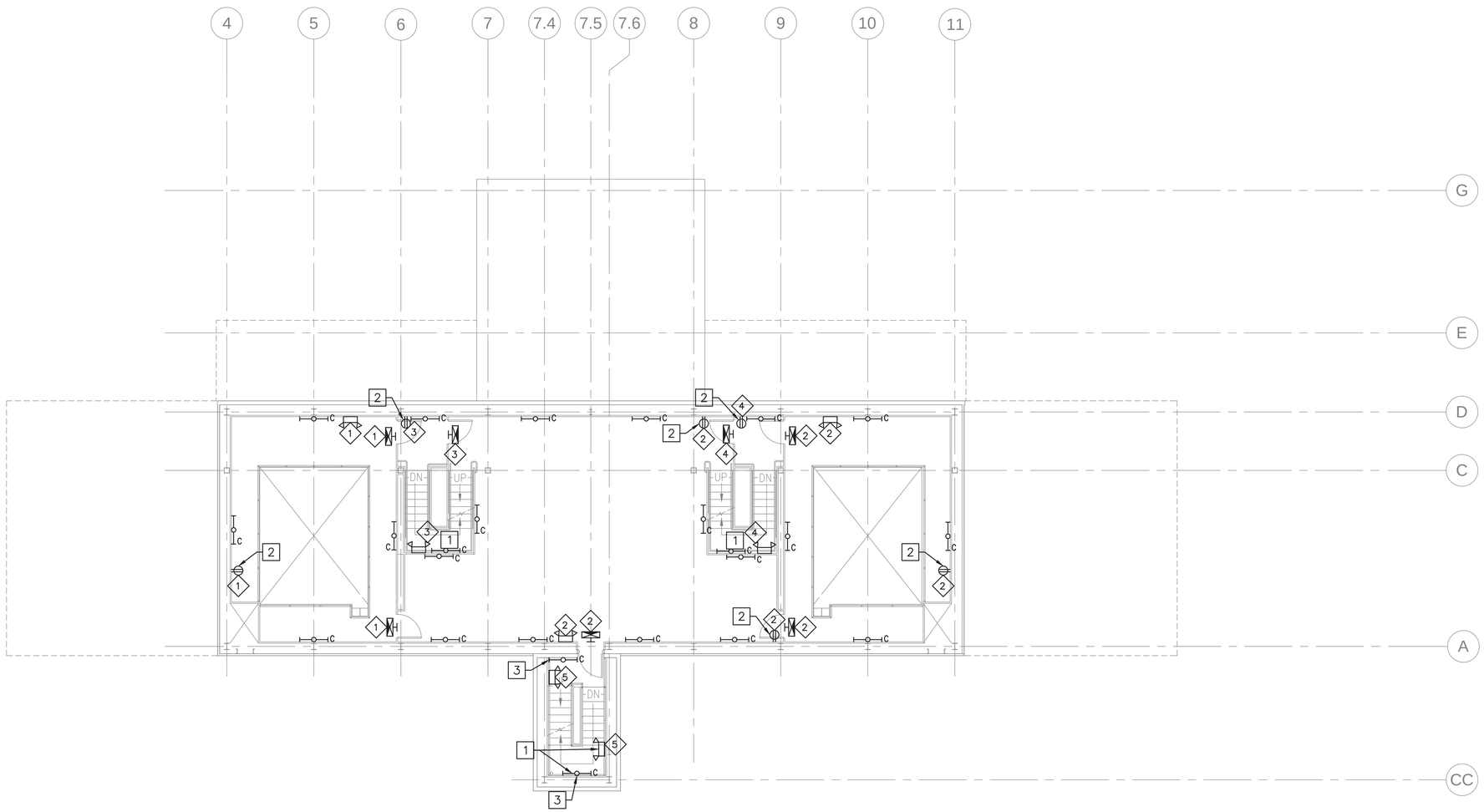

LEVEL 2 LIGHTING PLAN

SCALE: 1/8" = 1'-0"

0 4' 8' 16'
Scale: 1/8" = 1'-0"

SYM	DESCRIPTION	DATE	APPR
0	ISSUED FOR CONSTRUCTION	10/28/2016	CBC

NAVFAC

STATE OF MAINE
JASON M. BEAULIEU
No. 13441
LICENSED PROFESSIONAL ENGINEER
10/28/16
SEAL

Colby Company engineering
A/E INFO

APPROVED
David W. Thumfield
FOR COMMANDER NAVFAC

ACTIVITY
TIM FISHER
C. 2370.6 BRANCH HEAD

SATISFACTORY TO DATE 10/28/2016
DES JMB DRW JMB CHK MRL
PMDM PETER STOCKLESS
BRANCH MANAGER IAN BODWELL
FEA/DPM&E AMIN BAHROUR
FIRE PROTECTION PATRICK BAKAJ

DEPARTMENT OF THE NAVY
NAVAL FACILITIES ENGINEERING COMMAND ~ MID-ATLANTIC
PUBLIC WORKS DEPARTMENT - MAINE
NAVAL FACILITIES ENGINEERING COMMAND
NAVAL SHIPYARD - PORTSMOUTH, NH
PORTSMOUTH NAVAL SHIPYARD
KITTERY, ME
DRY DOCK #1 DEFUELING COMPLEX
M-140 COMPLEX
LEVEL 2 LIGHTING PLAN

EPROJECT NO.: 1363311
CONSTR. CONTR. NO. N40085-17-C-5002
NAVFAC DRAWING NO. 12734951
SHEET 168 OF 188
EL-102 DD1-16-1032

DRAWFORM REVISION: 10 OCTOBER 2014

10/28/2016 6:52:26 AM X:\297 PORTSMOUTH NAVAL SHIPYARD\297.005.001 - DD#1 DEFUELING COMPLEX DESIGN\DRAWINGS\M140\SHEETS\EL-102.DWG

CIRCUIT SCHEDULE

1. M-140-3 PANEL 2 #17
2. M-140-4 PANEL 2 #17
3. M-140-3 PANEL 2 #23
4. M-140-4 PANEL 2 #23
5. M-140-3 PANEL 2 #25
6. M-140-3 PANEL 2 #21
7. M-140-4 PANEL 2 #21

NOTES

1. SEE SHEET E-001 FOR LEGEND, ABBREVIATIONS AND GENERAL NOTES.
2. SEE SHEET E-602 FOR LIGHT FIXTURE SCHEDULE.
3. HOOKS TO BE INSTALLED IN METAL PANELED WALLS FOR LIGHT FIXTURE SUPPORT. COORDINATE WITH ARCHITECTURAL DETAIL C4 ON SHEET A-506.

KEYED NOTES

1. MOUNT LIGHT FIXTURE 8FT ABOVE STAIR LANDING.
2. PROVIDE SWITCHED RECEPTACLE FOR CORDED PORTABLE WORK LIGHTING. MOUNT RECEPTACLE 7FT AFF. CONTROL RECEPTACLE THROUGH LOCAL CONTROL PANEL.
3. STAIRWELL LIGHTS POWERED FROM RECEPTACLE ON LEVEL 1. SEE SHEET EL-101.
4. STAIRWELL LIGHTS POWERED FROM RECEPTACLE ON LEVEL 2. SEE SHEET EL-102.
5. MOUNT FIXTURE 11FT ABOVE LEVEL 2 ROOF.
6. MOUNT FIXTURE 45FT ABOVE GROUND ELEVATION.

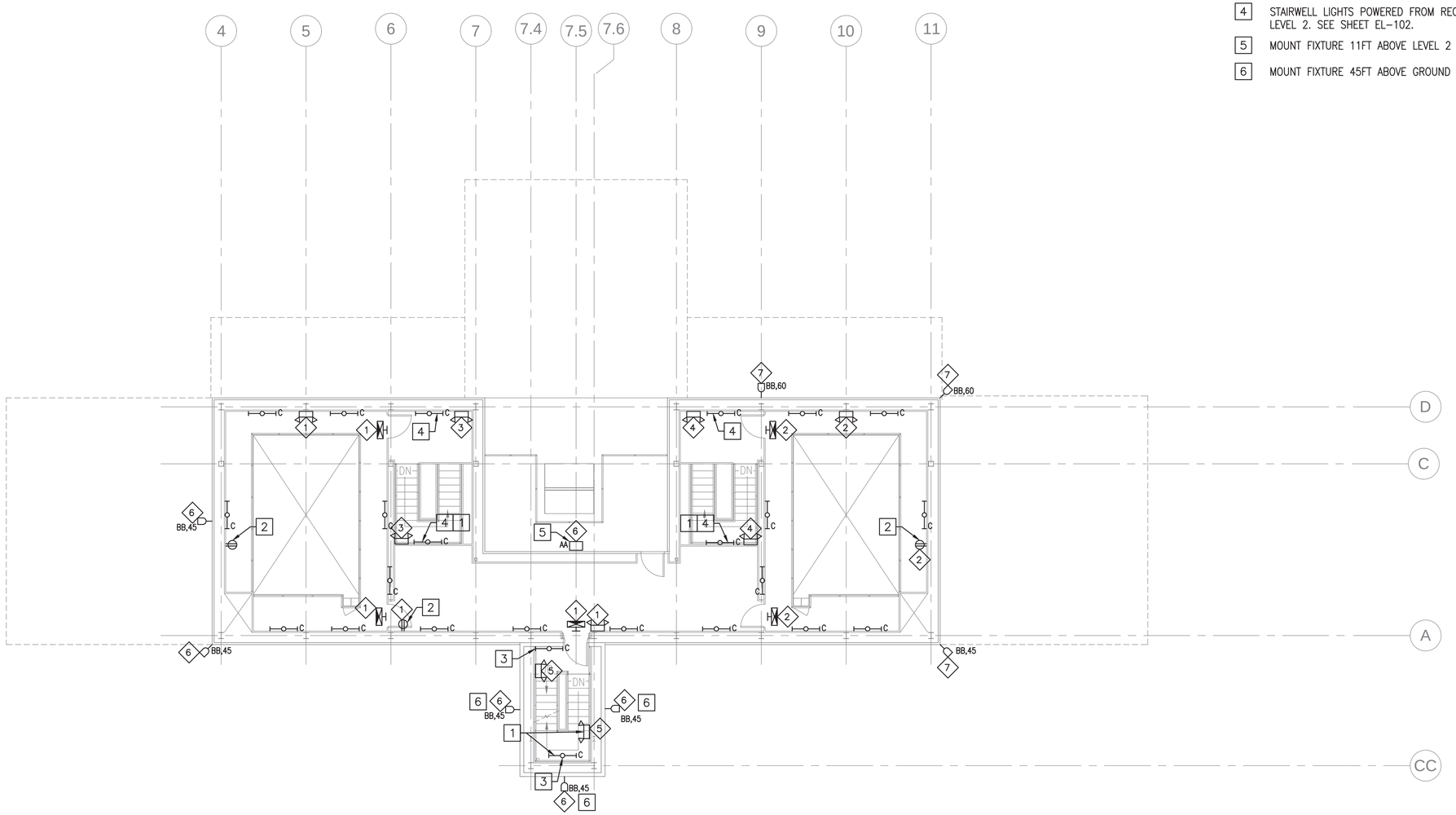

LEVEL 3 LIGHTING PLAN

SCALE: 1/8" = 1'-0"

0 4' 8' 16'
Scale: 1/8" = 1'-0"

SYM	DESCRIPTION	DATE	APPR
0	ISSUED FOR CONSTRUCTION	10/28/2016	CBC

NAVFAC

STATE OF MAINE
JASON M. BEAULIEU
No. 13441
LICENSED PROFESSIONAL ENGINEER
10/28/16
SEAL

Colby Company engineering
A/E INFO

APPROVED
Baird W. Grunfeld
FOR COMMANDER NAVFAC

ACTIVITY
TIM FISHER
C. 2370.6 BRANCH HEAD

SATISFACTORY TO DATE 10/28/2016

DES JMB | DRW JMB | CHK MRL

PMDM PETER STOCKLESS
BRANCH MANAGER IAN BODWELL
FEAD/PM&E AMIN BAHROUR
FIRE PROTECTION PATRICK BAKAJ

DEPARTMENT OF THE NAVY
NAVAL FACILITIES ENGINEERING COMMAND
PUBLIC WORKS DEPARTMENT - MAINE

NAVAL FACILITIES ENGINEERING COMMAND ~ MID-ATLANTIC
NAVAL SHIPYARD - PORTSMOUTH, NH

PORTSMOUTH NAVAL SHIPYARD
KITTERY, ME

DRY DOCK #1 DEFUELING COMPLEX
M-140 COMPLEX

LEVEL 3 LIGHTING PLAN

EPROJECT NO.: 1363311
CONSTR. CONTR. NO. N40085-17-C-5002
NAVFAC DRAWING NO. 12734952
SHEET 169 OF 188

EL-103 | DD1-16-1033

DRAWFORM REVISION: 10 OCTOBER 2014

10/28/2016 6:52:30 AM X:\297 PORTSMOUTH NAVAL SHIPYARD\297.005.001 - DD#1 DEFUELING COMPLEX DESIGN\DRAWINGS\M140\SHEETS\EL-103.DWG

CIRCUIT SCHEDULE

1. M-140-3 PANEL 2 #25
2. M-140-3 PANEL 2 #21

NOTES

1. SEE SHEET E-001 FOR LEGEND, ABBREVIATIONS AND GENERAL NOTES.
2. SEE SHEET E-602 FOR LIGHT FIXTURE SCHEDULE.
3. HOOKS TO BE INSTALLED IN METAL PANELED WALLS FOR LIGHT FIXTURE SUPPORT. COORDINATE WITH ARCHITECTURAL DETAIL C4 ON SHEET A-506.

KEYED NOTES

1. MOUNT LIGHT FIXTURE 8FT ABOVE STAIR LANDING.
2. STAIRWELL LIGHTS POWERED FROM RECEPTACLE ON LEVEL 1. SEE SHEET EL-101.
3. MOUNT FIXTURE 10FT ABOVE ROOF LEVEL.

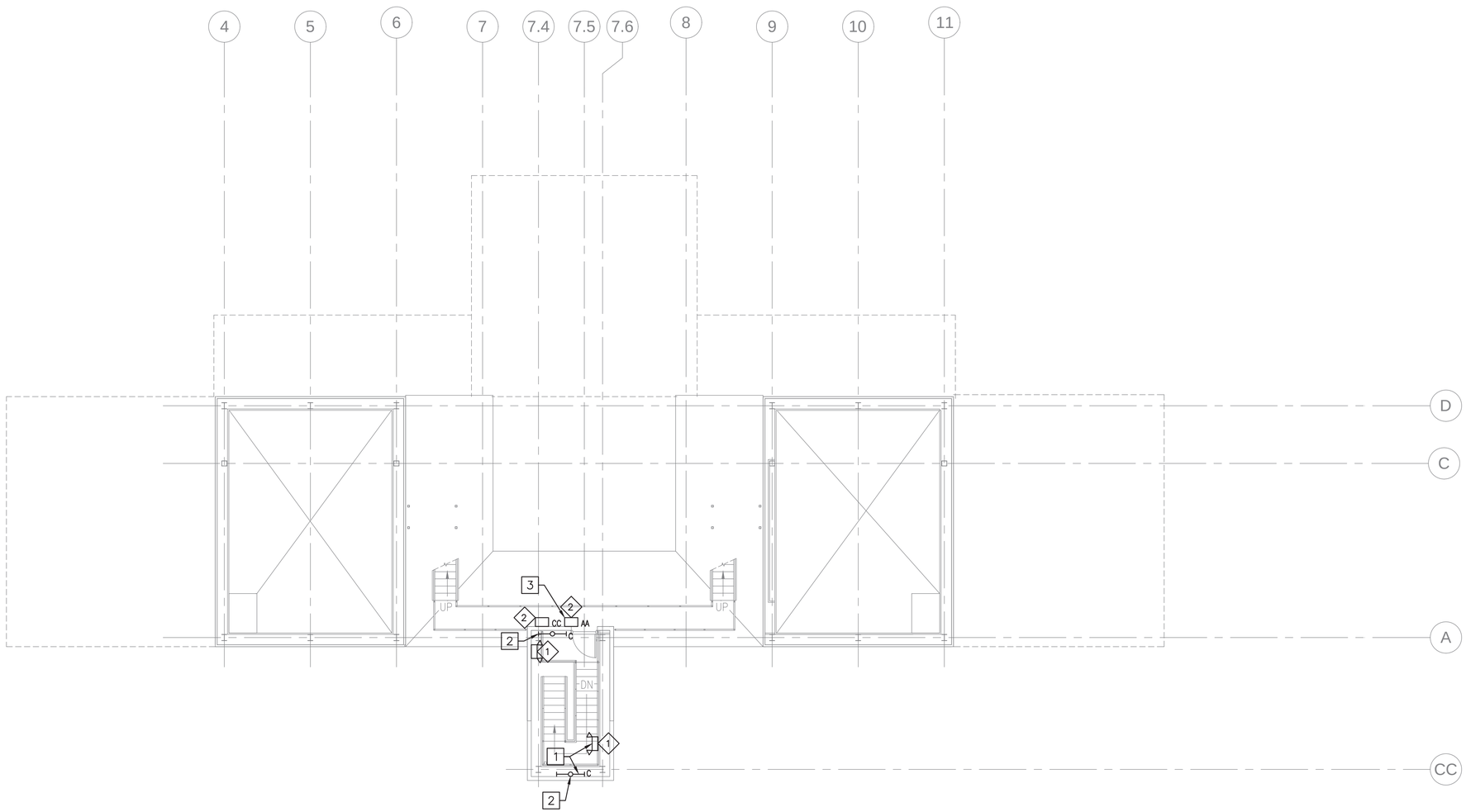

LEVEL 4 LIGHTING PLAN

SCALE: 1/8" = 1'-0"

PLAN NORTH

Scale: 1/8" = 1'-0"

SYM	DESCRIPTION	DATE	APPR
0	ISSUED FOR CONSTRUCTION	10/28/2016	CBC

NAVFAC

STATE OF MAINE
JASON M. BEAULIEU
No. 13441
LICENSED
PROFESSIONAL ENGINEER
10/28/16
SEAL

Colby Company engineering
A/E INFO

APPROVED
David W. Thurnfield
FOR COMMANDER NAVFAC

ACTIVITY
TIM FISHER
C. 2370.6 BRANCH HEAD

SATISFACTORY TO DATE 10/28/2016

DES JMB DRW JMB CHK MRL

PM/CM	PETER STOCKLESS
BRANCH MANAGER	IAN BODWELL
FEA/DP/M/E	AMIN BAHROUR
FIRE PROTECTION	PATRICK BAKAJ

DEPARTMENT OF THE NAVY
NAVAL FACILITIES ENGINEERING COMMAND
PUBLIC WORKS DEPARTMENT - MAINE

NAVAL FACILITIES ENGINEERING COMMAND ~ MID-ATLANTIC
NAVAL SHIPYARD - PORTSMOUTH, NH

PORTSMOUTH NAVAL SHIPYARD
KITTERY, ME

DRY DOCK #1 DEFUELING COMPLEX
M-140 COMPLEX

LEVEL 4 LIGHTING PLAN

EPROJECT NO.: 1363311

CONSTR. CONTR. NO.
N40085-17-C-5002

NAVFAC DRAWING NO.
12734953

SHEET 170 OF 188

EL-104 | DD1-16-1034

DRAWFORM REVISION: 10 OCTOBER 2014

10/28/2016 6:52:34 AM X:\297 PORTSMOUTH NAVAL SHIPYARD\297.005.001 - DD#1 DEFUELING COMPLEX DESIGN\DRAWINGS\M140\SHEETS\EL-104.DWG

CIRCUIT SCHEDULE

1. M-140-3 PANEL 2 #19
2. M-140-4 PANEL 2 #19
3. M-140-3 PANEL 2 #21
4. M-140-4 PANEL 2 #21

NOTES

1. SEE SHEET E-001 FOR LEGEND, ABBREVIATIONS AND GENERAL NOTES.
2. SEE SHEET E-602 FOR LIGHT FIXTURE SCHEDULE.
3. HOOKS TO BE INSTALLED IN METAL PANELED WALLS FOR LIGHT FIXTURE SUPPORT. COORDINATE WITH ARCHITECTURAL DETAIL C4 ON SHEET A-506.

KEYED NOTES

1. PROVIDE SWITCHED RECEPTACLE FOR CORDED PORTABLE WORK LIGHTING. MOUNT RECEPTACLE 7FT AFF. WIRE FOR 3-WAY CONTROL BETWEEN SWITCH AND LOCAL CONTROL PANEL ON GROUND FLOOR.
2. MOUNT FIXTURES 66FT ABOVE FINISH GRADE.
3. MOUNT FIXTURES 7FT ABOVE STAIR LANDING.

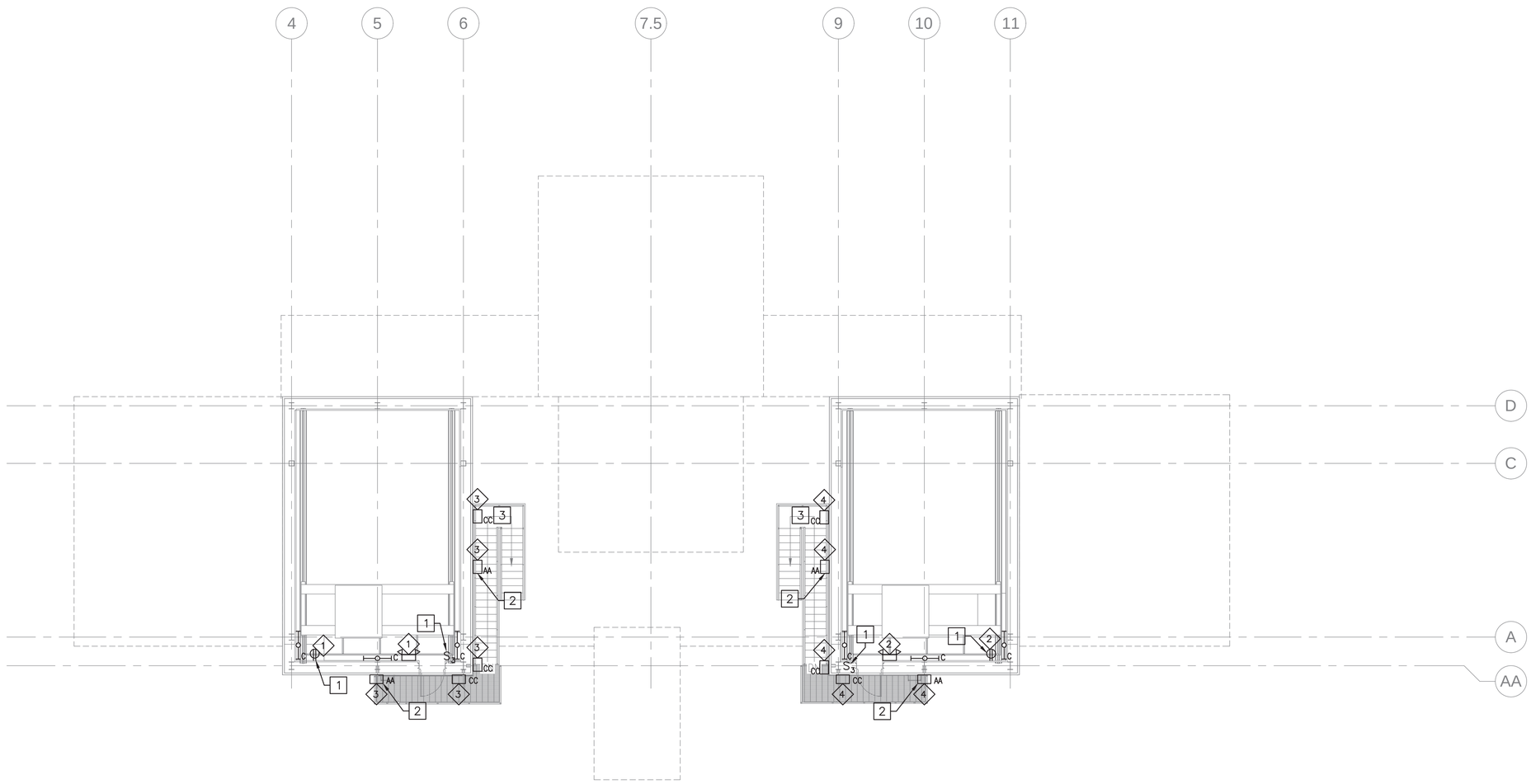

CRANE LEVEL LIGHTING PLAN

SCALE: 1/8" = 1'-0"

PLAN NORTH

0 4' 8' 16'
Scale: 1/8" = 1'-0"

SYM	DESCRIPTION	DATE	APPR
0	ISSUED FOR CONSTRUCTION	10/28/2016	CBC

NAVFAC

STATE OF MAINE
JASON M. BEAULIEU
No. 13441
LICENSED PROFESSIONAL ENGINEER
10/28/16
SEAL

Colby Company engineering
A/E INFO

APPROVED
David W. Thurnfield
FOR COMMANDER NAVFAC

ACTIVITY
TIM FISHER
C. 2370.6 BRANCH HEAD

SATISFACTORY TO DATE 10/28/2016

DES JMB | DRW JMB | CHK MRL

PM/DM PETER STOCKLESS
BRANCH MANAGER IAN BODWELL
FEAD/PM&E AMIN BAHROUR
FIRE PROTECTION PATRICK BAKAJ

DEPARTMENT OF THE NAVY
NAVAL FACILITIES ENGINEERING COMMAND
PUBLIC WORKS DEPARTMENT - MAINE

NAVAL FACILITIES ENGINEERING COMMAND ~ MID-ATLANTIC
NAVAL SHIPYARD - PORTSMOUTH, NH

PORTSMOUTH NAVAL SHIPYARD
KITTERY, ME

DRY DOCK #1 DEFUELING COMPLEX
M-140 COMPLEX

CRANE LEVEL LIGHTING PLAN

EPROJECT NO.: 1363311

CONSTR. CONTR. NO.
N40085-17-C-5002

NAVFAC DRAWING NO.
12734954

SHEET 171 OF 188

EL-105 | DD1-16-1035

DRAWFORM REVISION: 10 OCTOBER 2014

10/28/2016 6:52:38 AM X:\297 PORTSMOUTH NAVAL SHIPYARD\297.005.001 - DD#1 DEFUELING COMPLEX DESIGN\DRAWINGS\M140\SHEETS\EL-105.DWG

NOTES

1. SEE SHEET E-001 FOR LEGEND, ABBREVIATIONS AND GENERAL NOTES.

CABLE SCHEDULE

1. (3) 500 KCMIL, (1) #3 GND, IN 2-1/2" C
2. (3) #1/0 AWG, (1) #6 GND, IN 1-1/2" C
3. (3) #8 AWG, (1) #10 GND, IN 3/4" C
4. (3) #12 AWG, (1) #12 GND, IN 3/4" C

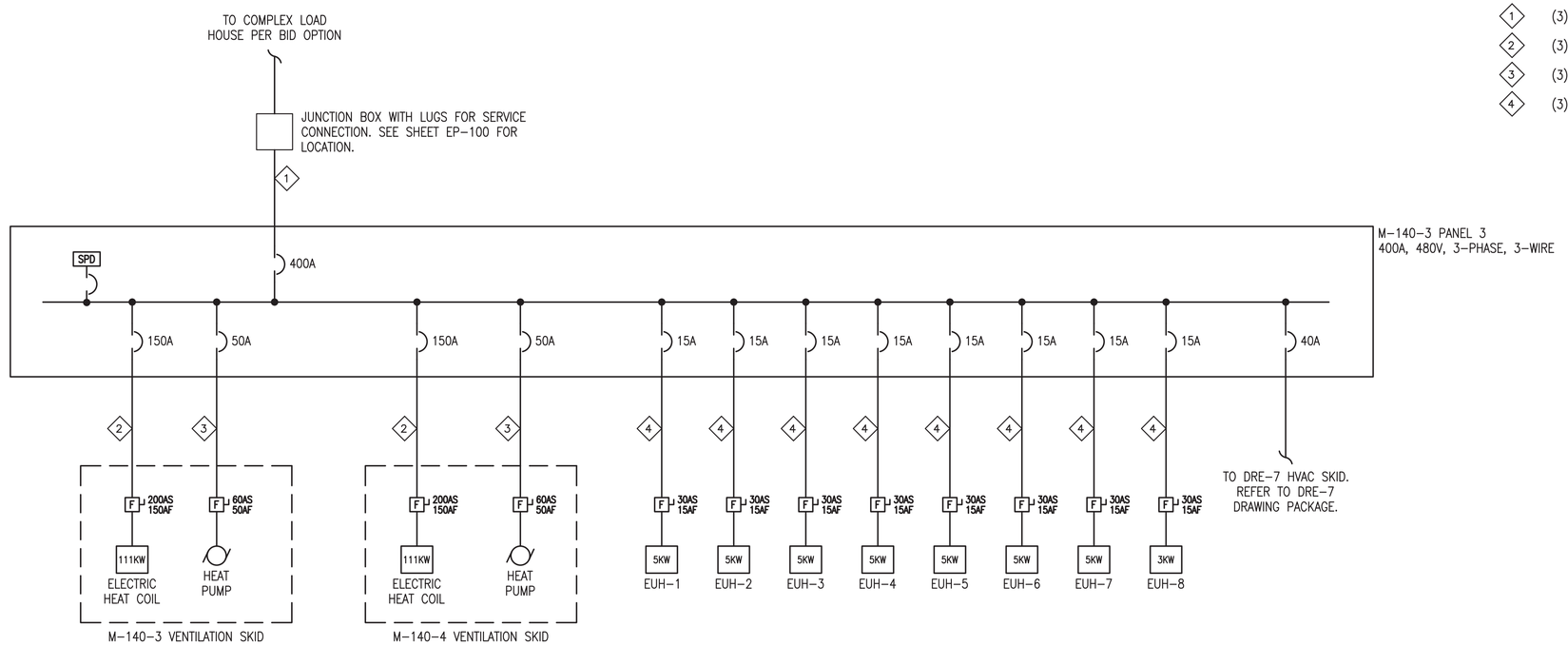

ONE-LINE DIAGRAM - NON-CRITIAL LOADS (A1)

SCALE: NTS

SYM	DESCRIPTION	DATE	APPR
0	ISSUED FOR CONSTRUCTION	10/28/2016	CBC

NAVFAC

STATE OF MAINE
JASON M. BEAULIEU
No. 13441
LICENSED PROFESSIONAL ENGINEER
10/28/16
SEAL

Colby Company engineering
A/E INFO

APPROVED
David W. Thurnfield
FOR COMMANDER NAVFAC

ACTIVITY
TIM FISHER
C. 2370.6 BRANCH HEAD

SATISFACTORY TO DATE 10/28/2016

DES JMB DRW JMB CHK MRL

PMDM PETER STOCKLESS

BRANCH MANAGER IAN BODWELL

FEA/DPM&E AMIN BAHROUR

FIRE PROTECTION PATRICK BAKAJ

DEPARTMENT OF THE NAVY
NAVAL FACILITIES ENGINEERING COMMAND
PUBLIC WORKS DEPARTMENT - MAINE

NAVAL FACILITIES ENGINEERING COMMAND ~ MID-ATLANTIC
NAVAL SHIPYARD - PORTSMOUTH, NH

PORTSMOUTH NAVAL SHIPYARD
KITTERY, ME

DRY DOCK #1 DEFUELING COMPLEX
M-140 COMPLEX

ONE-LINE DIAGRAM - NON-CRITIAL LOADS

EPROJECT NO.: 1363311

CONSTR. CONTR. NO.
N40085-17-C-5002

NAVFAC DRAWING NO.
12734955

SHEET 172 OF 188

E-501 | DD1-16-1036

DRAWFORM REVISION: 10 OCTOBER 2014

10/28/2016 6:52:42 AM X:\297 PORTSMOUTH NAVAL SHIPYARD\297.005.001 - DD#1 DEFUELING COMPLEX DESIGN\DRAWINGS\M140\SHEETS\E-501.DWG

NOTES

1. SEE SHEET E-001 FOR LEGEND, ABBREVIATIONS AND GENERAL NOTES.

KEYED NOTES

1. PROVIDE DISCONNECT AND WIRE TO 100A CIRCUIT. LEAVE LOAD LUGS UNCONNECTED.
2. PROVIDE LOCKABLE DISCONNECT SWITCH FOR ROOF MOTOR SYSTEM. SEE SHEET EP-100 FOR LOCATION.
3. LEVEL 2 CRANE DISCONNECT. SEE SHEET EP-102.

CABLE SCHEDULE

1. (3) 500 KCMIL, (1) #3 GND, IN 2-1/2" C
2. (3) #3/0 AWG, (1) #6 GND, IN 2" C
3. (3) #2 AWG, (1) #6 GND, IN 1-1/2" C
4. (3) #3 AWG, (1) #8 GND, IN 1" C
5. (3) #12 AWG, (1) #12 GND, IN 3/4" C
6. (3) #8 AWG, (1) #10 GND, IN 3/4" C
7. (4) #2 AWG, (1) #8 GND, IN 1-1/2" C

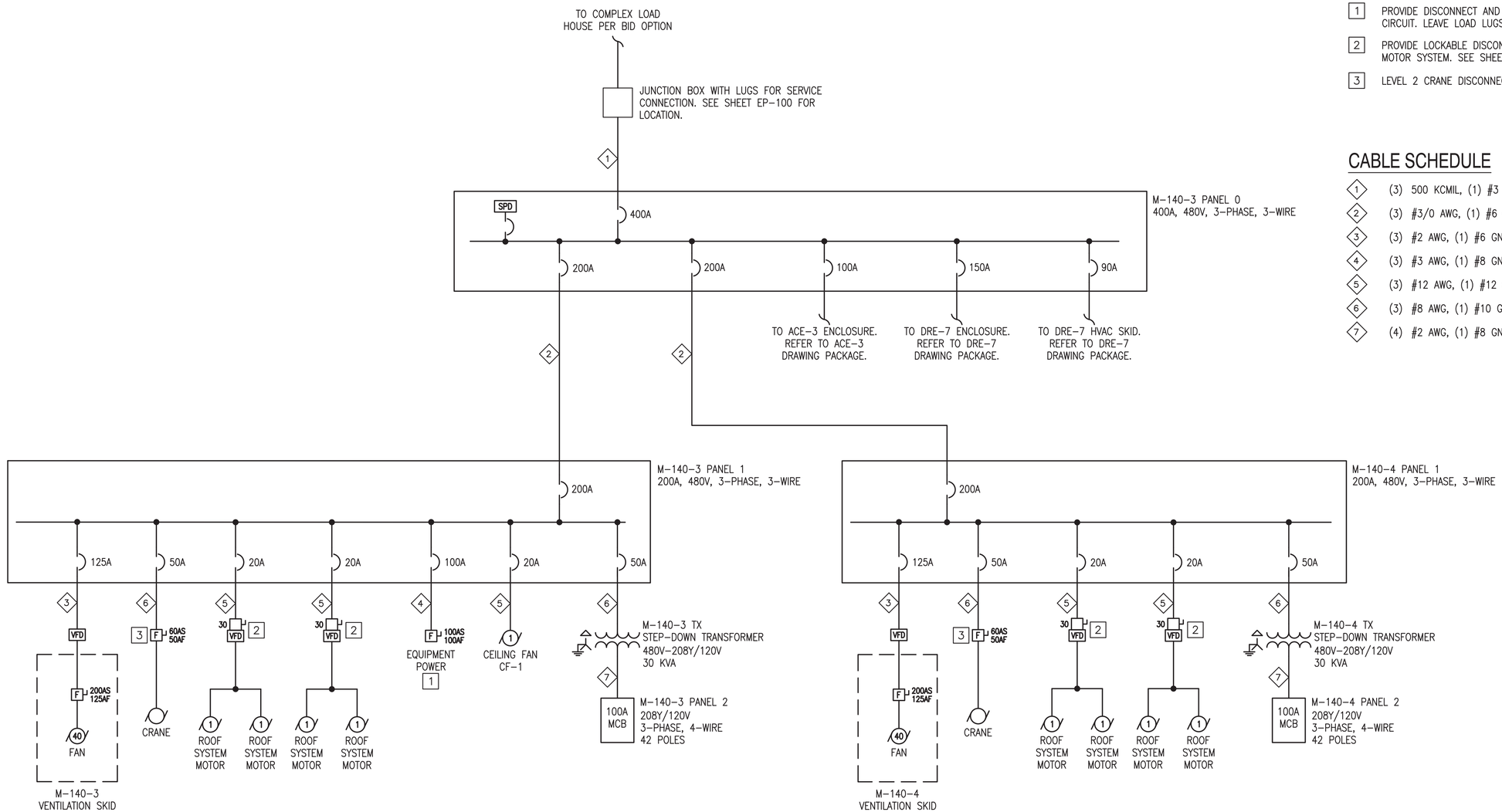

ONE-LINE DIAGRAM - CRITICAL LOADS (A1)

SCALE: NTS

SYM	DESCRIPTION	DATE	APPR
0	ISSUED FOR CONSTRUCTION	10/28/2016	CBC

NAVFAC

STATE OF MAINE
JASON M. BEAULIEU
No. 13441
LICENSED PROFESSIONAL ENGINEER
10/28/16
SEAL

Colby Company engineering
A/E INFO

APPROVED
David W. Thumfuld
FOR COMMANDER NAVFAC

ACTIVITY
TIM FISHER
C. 2370.6 BRANCH HEAD

SATISFACTORY TO DATE 10/28/2016

DES	JMB	DRW	JMB	CHK	MRL

PMDM: PETER STOCKLESS
BRANCH MANAGER: IAN BODWELL
FEAD/PMAE: AMIN BAHROUR
FIRE PROTECTION: PATRICK BAKAJ

NAVAL FACILITIES ENGINEERING COMMAND
NAVAL SHIPYARD - PORTSMOUTH, NH

DEPARTMENT OF THE NAVY
NAVAL FACILITIES ENGINEERING COMMAND ~ MID-ATLANTIC
PUBLIC WORKS DEPARTMENT - MAINE

PORTSMOUTH NAVAL SHIPYARD
KITTERY, ME
DRY DOCK #1 DEFUELING COMPLEX
M-140 COMPLEX

ONE-LINE DIAGRAM - CRITICAL LOADS

EPROJECT NO.: 1363311
CONSTR. CONTR. NO. N40085-17-C-5002
NAVFAC DRAWING NO. 12734956
SHEET 173 OF 188

E-502 | DD1-16-1037

DRAWFORM REVISION: 10 OCTOBER 2014

10/28/2016 6:52:46 AM X:\297 PORTSMOUTH NAVAL SHIPYARD\297.005.001 - DD#1 DEFUELING COMPLEX DESIGN\DRAWINGS\M140\SHEET\SE-502.DWG

NOTES

1. SEE SHEET E-001 FOR LEGEND, ABBREVIATIONS AND GENERAL NOTES.

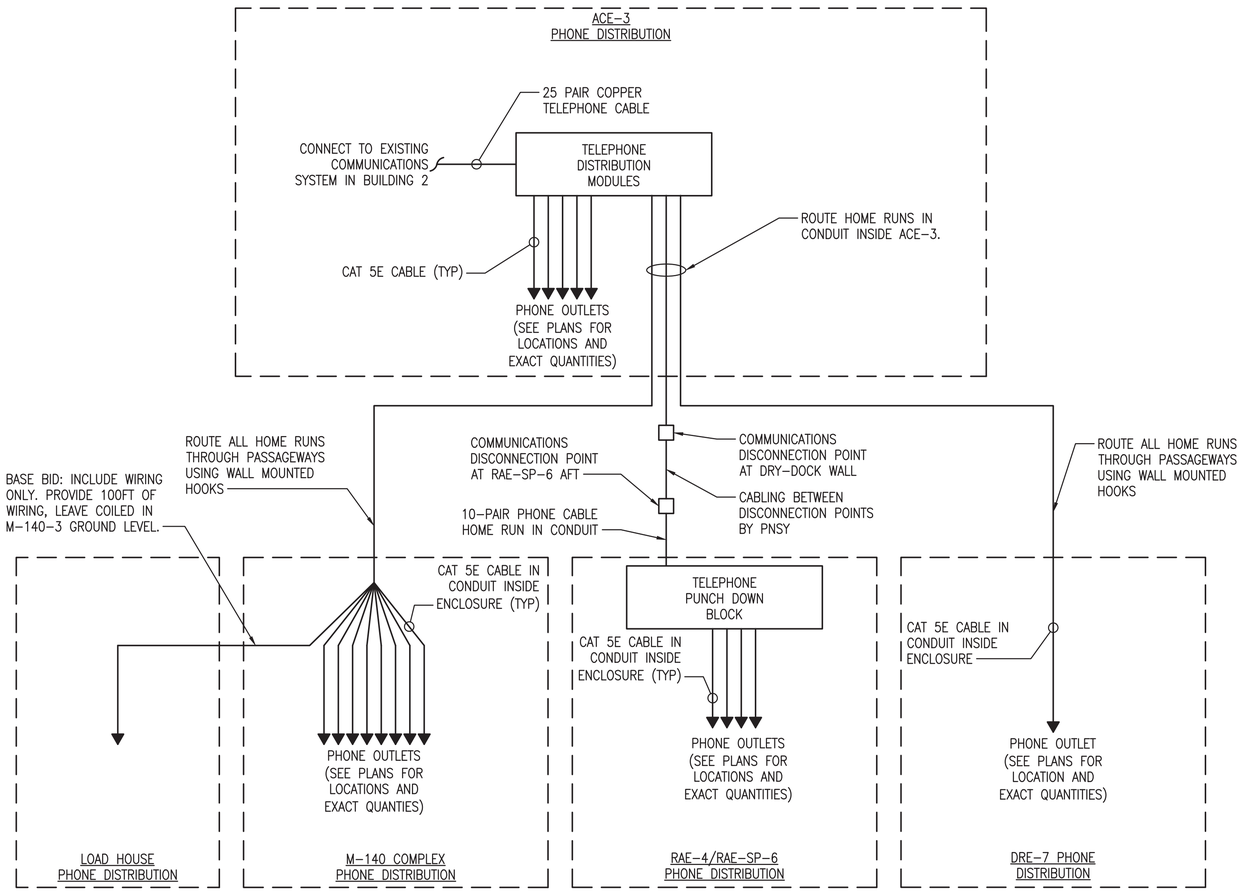

PHONE SYSTEM SCHEMATIC (B1)

SCALE: NTS

SYM	DESCRIPTION	DATE	APPR
0	ISSUED FOR CONSTRUCTION	10/28/2016	CBC

NAVFAC

STATE OF MAINE
JASON M. BEAULIEU
No. 13441
LICENSED PROFESSIONAL ENGINEER
10/28/16
SEAL

Colby Company engineering
A/E INFO

APPROVED
David W. Trumfield
FOR COMMANDER NAVFAC

ACTIVITY
TIM FISHER
C. 2370.6 BRANCH HEAD

SATISFACTORY TO DATE 10/28/2016

DES	JMB	DRW	JMB	CHK	MRL

PMDM	PETER STOCKLESS
BRANCH MANAGER	IAN BODWELL
FEA/DPM&E	AMIN BAHROUR
FIRE PROTECTION	PATRICK BAKAJ

DEPARTMENT OF THE NAVY
NAVAL FACILITIES ENGINEERING COMMAND
PUBLIC WORKS DEPARTMENT - MAINE

NAVAL FACILITIES ENGINEERING COMMAND ~ MID-ATLANTIC
NAVAL SHIPYARD - PORTSMOUTH, NH

PORTSMOUTH NAVAL SHIPYARD
KITTERY, ME

DRY DOCK #1 DEFUELING COMPLEX
M-140 COMPLEX

ELECTRICAL PHONE SYSTEM SCHEMATIC

EPROJECT NO.: 1363311

CONSTR. CONTR. NO.
N40085-17-C-5002

NAVFAC DRAWING NO.
12734957

SHEET 174 OF 188

E-503 | DD1-16-1038

DRAWFORM REVISION: 10 OCTOBER 2014

10/28/2016 6:52:50 AM X:\297 PORTSMOUTH NAVAL SHIPYARD\297.005.001 - DD#1 DEFUELING COMPLEX DESIGN\DRAWINGS\M140\SHEETS\E-503.DWG

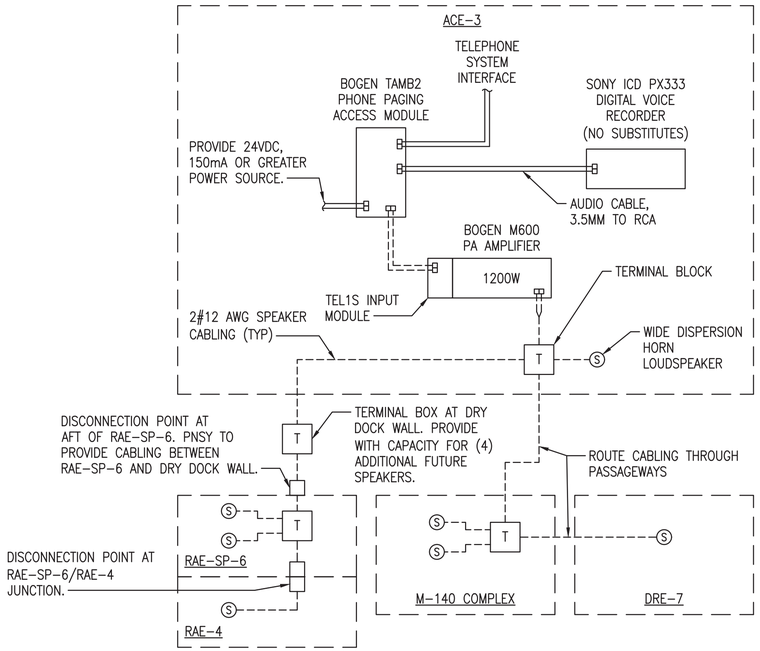

CASUALTY PA SCHEMATIC (C1)

SCALE: NTS

CASUALTY PA NOTES:

1. ALL CABLING SHALL BE RUN IN CONDUIT WITH EXCEPTION OF CABLING BETWEEN ENCLOSURES LOCATED INSIDE PASSAGEWAYS. PASSAGEWAY CABLING SHALL BE EXPOSED AND SUPPORTED FROM HOOKS INSTALLED IN PASSAGEWAYS.

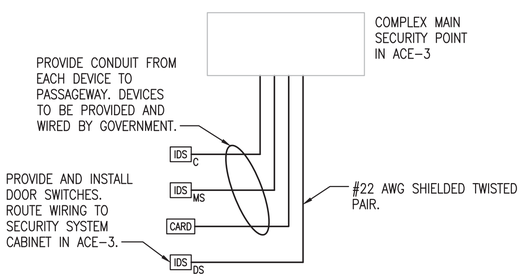

SECURITY SCHEMATIC (A1)

SCALE: NTS

SECURITY NOTES:

1. THIS SCHEMATIC IS FOR REQUIRED SYSTEM COMPONENT ILLUSTRATION ONLY. REFER TO FLOOR PLANS FOR ALL DEVICE QUANTITIES.
2. ALL CABLING INSIDE ENCLOSURES SHALL BE RUN IN CONDUIT. CABLING LOCATED INSIDE PASSAGEWAYS SHALL BE EXPOSED AND SUPPORTED FROM HOOKS INSTALLED IN PASSAGEWAYS.
3. ALL SECURITY SYSTEM WIRING AND CONNECTIONS SHALL BE PROTECTED FROM TAMPERING. CONDUIT SHALL NOT HAVE ACCESS COVERS.
4. JUNCTION BOXES AND WIRING FOR ALL SECURITY SYSTEM SHALL BE LOCATED INSIDE THE FACILITY.
5. MINIMIZE THE USE OF JUNCTION BOXES. ALL JUNCTION BOXES SHALL BE PROVIDED WITH A TAMPER SWITCH. SEE SECURITY SWITCH WIRING DIAGRAM (THIS SHEET).

DOOR STATE	TAMPER STATE	MAGNETIC SWITCH	CIRCUIT RESISTANCE
OPEN	SHUT	CLOSED	500 OHMS
SHUT	SHUT	OPEN	1K OHMS
OPEN	OPEN	CLOSED	INFINITY
SHUT	OPEN	OPEN	INFINITY

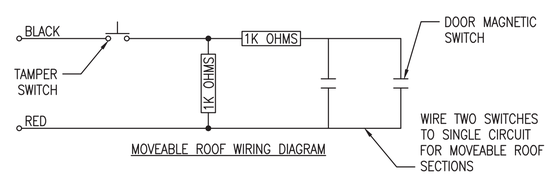

MOVEABLE ROOF WIRING DIAGRAM

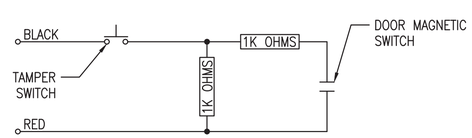

MAN DOOR WIRING DIAGRAM

SECURITY SWITCH WIRING DIAGRAM (A2)

SCALE: NTS

NOTES

1. SEE SHEET E-001 FOR LEGEND, ABBREVIATIONS AND GENERAL NOTES.

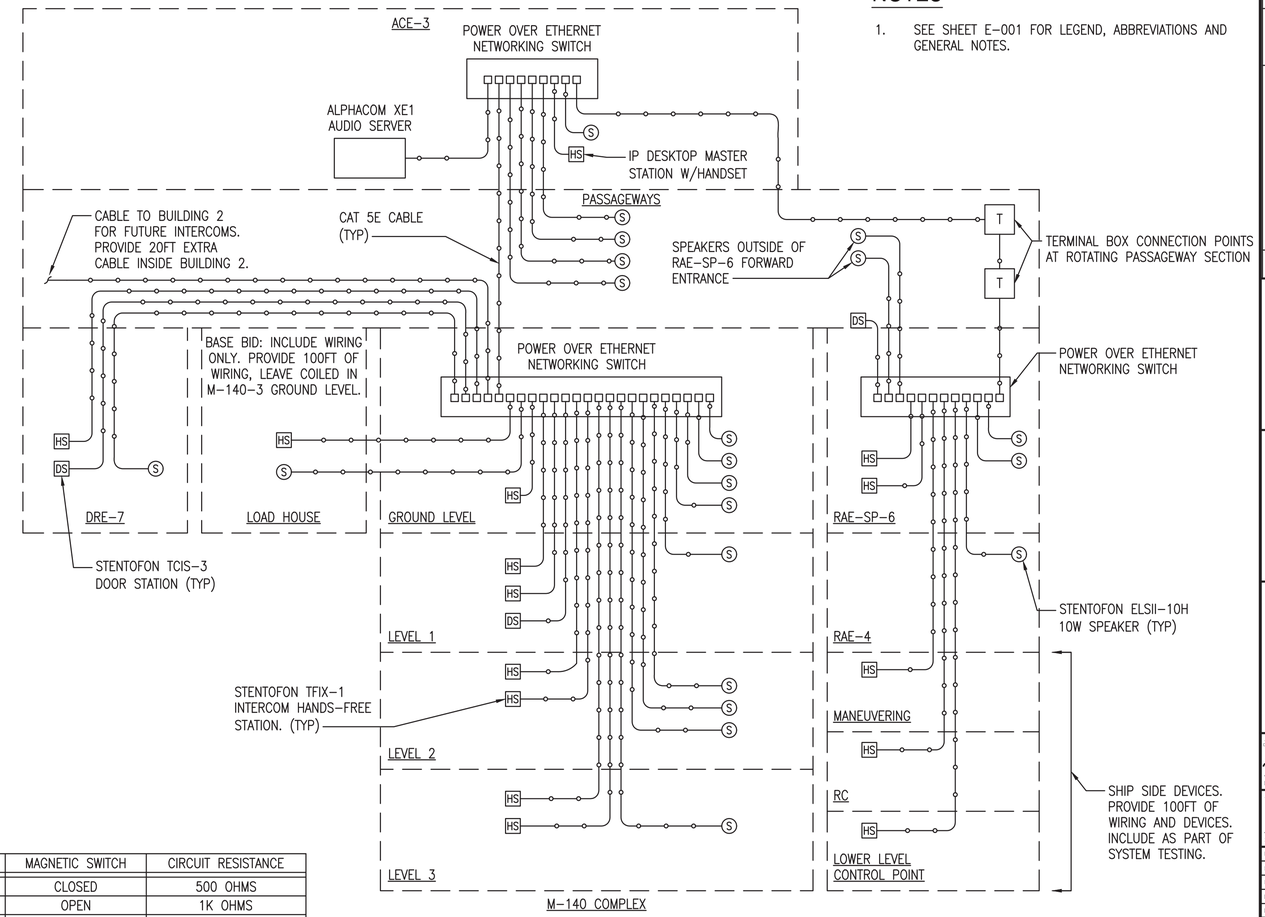

INTERCOM SCHEMATIC (B3)

SCALE: NTS

INTERCOM NOTES:

1. ALL CABLING SHALL BE RUN IN CONDUIT WITH EXCEPTION OF CABLING BETWEEN ENCLOSURES LOCATED INSIDE PASSAGEWAYS. PASSAGEWAY CABLING SHALL BE EXPOSED AND SUPPORTED FROM HOOKS INSTALLED IN PASSAGEWAYS.

SYM	DESCRIPTION	DATE	APPR
0	ISSUED FOR CONSTRUCTION	10/28/2016	CBC

NAVFAC

STATE OF MAINE JASON M. BEAULIEU No. 13441 LICENSED PROFESSIONAL ENGINEER 10/28/16 SEAL

Colby Company engineering A/E INFO

APPROVED David W. Thurnfield FOR COMMANDER NAVFAC

ACTIVITY TIM FISHER C. 2370.6 BRANCH HEAD

SATISFACTORY TO DATE 10/28/2016

DES JMB DRW JMB CHK MRL

PMDM PETER STOCKLESS

BRANCH MANAGER IAN BODWELL

FEAD/P&E AMIN BAHROUR

FIRE PROTECTION PATRICK BAKAJ

DEPARTMENT OF THE NAVY
NAVAL FACILITIES ENGINEERING COMMAND ~ MID-ATLANTIC
PUBLIC WORKS DEPARTMENT - MAINE
NAVAL FACILITIES ENGINEERING COMMAND
NAVAL SHIPYARD - PORTSMOUTH, NH
PORTSMOUTH NAVAL SHIPYARD
KITTERY, ME
DRY DOCK #1 DEFUELING COMPLEX
M-140 COMPLEX
ELECTRICAL SCHEMATICS

EPROJECT NO.: 1363311

CONSTR. CONTR. NO. N40085-17-C-5002

NAVFAC DRAWING NO. 12734958

SHEET 175 OF 188

E-504 DD1-16-1039

DRAWFORM REVISION: 10 OCTOBER 2014

10/28/2016 6:52:55 AM X:\297 PORTSMOUTH NAVAL SHIPYARD\297.005.001 - DD#1 DEFUELING COMPLEX DESIGN\DRAWINGS\M140\SHEETS\E-504.DWG

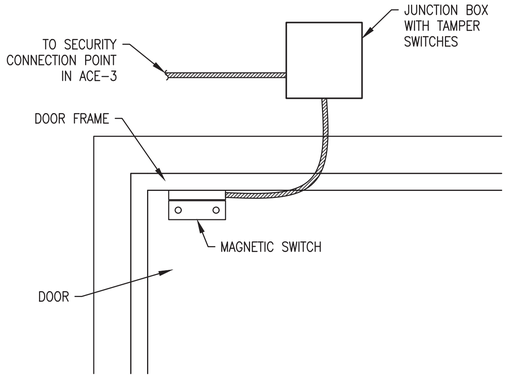

MAN DOOR SECURITY SWITCH DETAIL (C1)

SCALE: 3" = 1'-0"

NOTE: FOLLOW MANUFACTURERS INSTRUCTIONS FOR MOUNTING REQUIREMENTS.

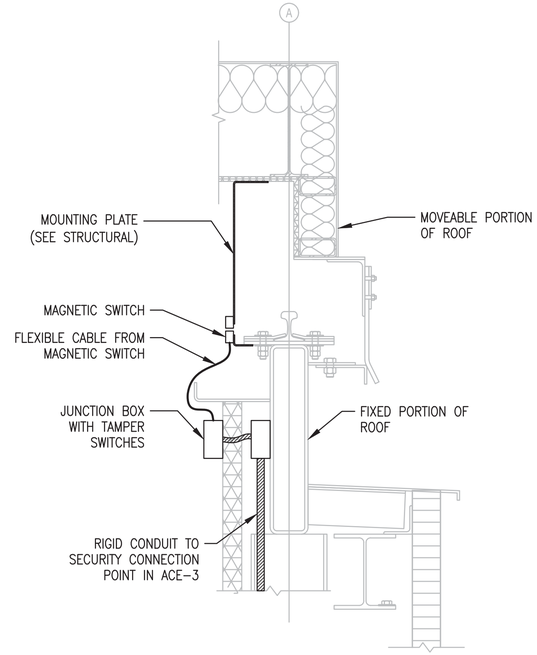

ROOF SECURITY SWITCH DETAIL (C3)

SCALE: 1 1/2"=1'-0" EP-104

NOTE: FOLLOW MANUFACTURERS INSTRUCTIONS FOR MOUNTING REQUIREMENTS.

NOTES

1. SEE SHEET E-001 FOR LEGEND, ABBREVIATIONS AND GENERAL NOTES.

EQUIPMENT LABEL & CHARACTERISTICS (VOLTAGE, PHASE, FREQUENCY)

FED FROM PANEL XX, CIRCUIT XX

ELECTRICAL LABELING DETAIL (A1)

SCALE: NTS

NOTES:
1. LABEL SHALL BE ENGRAVED MELAMINE PLASTIC PLATES.

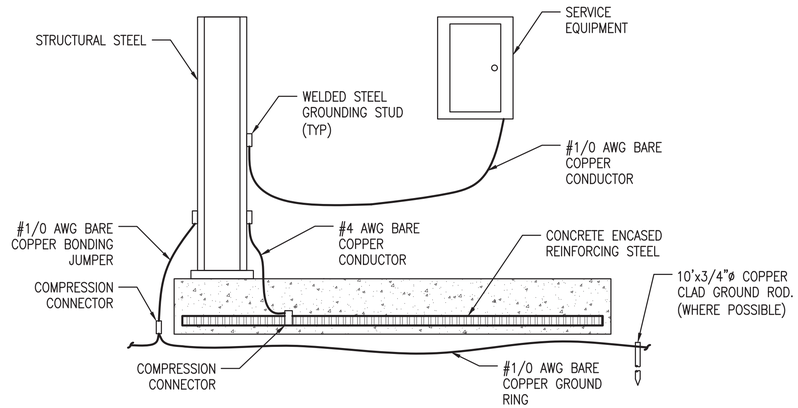

GROUNDING DIAGRAM (A2)

SCALE: NTS

NOTES:
1. WHERE GROUND RODS CANNOT BE DRIVEN TO PROPER DEPTHS ENSURE STRUCTURAL FOUNDATION REINFORCING IS BONDED TO PROVIDE ADEQUATE GROUNDING.
2. WHERE GROUND RODS ARE DRIVEN, PROVIDE A MINIMUM OF 3 RODS SPACED A MINIMUM OF 10FT APART.

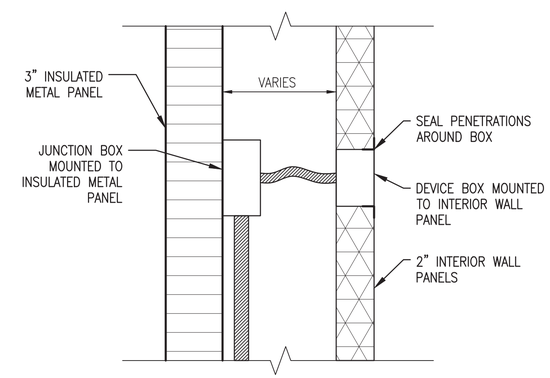

DEVICE BOX DETAIL (A4)

SCALE: 3" = 1'-0"

NOTES:
1. THIS DETAIL APPLIES TO ALL DEVICES MOUNTED ON EXTERIOR WALLS. INTERIOR PARTITIONS SHALL FOLLOW WALL PANEL MANUFACTURER'S INSTALLATION INSTRUCTIONS.
2. SEE A-506 FOR ADDITIONAL DETAILS.

0 1/2' 1' 1 1/2'
Scale: 1 1/2" = 1'-0"

0 3" 6" 9"
Scale: 3" = 1'-0"

SYM	DESCRIPTION	DATE	APPR
0	ISSUED FOR CONSTRUCTION	10/28/2016	CBC

NAVFAC

STATE OF MAINE
JASON M. BEAULIEU
No. 13441
LICENSED PROFESSIONAL ENGINEER
10/28/16
SEAL

Colby Company engineering
A/E INFO

APPROVED
David W. Thurnfield
FOR COMMANDER NAVFAC

ACTIVITY
TIM FISHER
C. 2370.6 BRANCH HEAD

SATISFACTORY TO DATE 10/28/2016

DES JMB | DRW JMB | CHK MRL

PM/DM PETER STOCKLESS
BRANCH MANAGER IAN BODWELL
FEA/DPM&E AMIN BAHROUR
FIRE PROTECTION PATRICK BAKAJ

DEPARTMENT OF THE NAVY
NAVAL FACILITIES ENGINEERING COMMAND
PUBLIC WORKS DEPARTMENT - MAINE
NAVAL FACILITIES ENGINEERING COMMAND ~ MID-ATLANTIC
NAVAL SHIPYARD - PORTSMOUTH, NH
PORTSMOUTH NAVAL SHIPYARD
KITTERY, ME
DRY DOCK #1 DEFUELING COMPLEX
M-140 COMPLEX
ELECTRICAL DETAILS

EPROJECT NO.: 1363311
CONSTR. CONTR. NO. N40085-17-C-5002
NAVFAC DRAWING NO. 12734959
SHEET 176 OF 188
E-505 | DD1-16-1040

DRAWFORM REVISION: 10 OCTOBER 2014

10/28/2016 6:52:59 AM X:\297 PORTSMOUTH NAVAL SHIPYARD\297.005.001 - DD#1 DEFUELING COMPLEX DESIGN\DRAWINGS\M140\SHEETS\E-505.DWG

PANELBOARD NO: M-140-3 PANEL 0
PANELBOARD TYPE: SQUARE D NQOD
PANEL LOCATION: GROUND LEVEL
SUPPLIED FROM: COMPLEX LOAD HOUSE PER BID OPTION

SC RATING: 65 KAIC
MOUNTING: SURFACE
VOLTAGE: 480V, 3-PHASE, 3-WIRE

400 AMP MAIN BREAKER
400 AMP BUS (COPPER)

CKT NO.	TRIP AMPS	NO. POLES	WIRE / CONDUIT	GND. WIRE	LOAD SERVED	LOAD VA	ϕ	LOAD VA	LOAD SERVED	WIRE / CONDUIT	GND. WIRE	NO. POLES	TRIP AMPS	CKT NO.
1	200	3	3#3/0 / 2	#6	PANEL M-140-4 PANEL 1	19314	A	21672	PANEL M-140-3 PANEL 1	3#3/0 / 2	#6	3	200	2
3						19995	B	21501						4
5						19974	C	22316						6
7	100	3	3#3 / 1"	#8	PANEL ACE-3 PANEL 1	11887	A	18732	PANEL DRE-7 PANEL 1	3#1/0 / 1-1/2"	#6	3	150	8
9						13417	B	20576						10
11						11293	C	18985						12
13	90	3	3#4 / 1"	#8	DRE-7 HVAC SKID ELECTRIC COIL	24333	A							14
15						24333	B							16
17						24333	C							18
19							A							20
21							B							22
23							C							24
25							A		SURGE PROTECTION (NOTE 1)			3	20	26
27							B							28
29							C							30

TOTAL PHASE A LOAD = 95.9 KVA
TOTAL PHASE B LOAD = 99.8 KVA
TOTAL PHASE C LOAD = 96.9 KVA
TOTAL CONNECTED LOAD = 292.7 KVA

NOTES: 1. REFER TO MANUFACTURER'S REQUIREMENTS FOR CB AND WIRING SIZE

M-140-3 PANEL 0 SCHEDULE (C1)
SCALE: NTS

PANELBOARD NO: M-140-3 PANEL 1
PANELBOARD TYPE: SQUARE D NQOD
PANEL LOCATION: GROUND LEVEL
SUPPLIED FROM: M140-3-PANEL 0

SC RATING: 65 KAIC
MOUNTING: SURFACE
VOLTAGE: 480V, 3-PHASE, 3-WIRE

200 AMP MAIN BREAKER
225 AMP BUS (COPPER)

CKT NO.	TRIP AMPS	NO. POLES	WIRE / CONDUIT	GND. WIRE	LOAD SERVED	LOAD VA	ϕ	LOAD VA	LOAD SERVED	WIRE / CONDUIT	GND. WIRE	NO. POLES	TRIP AMPS	CKT NO.
1	50	3	3#8 / 3/4"	#10	PANEL M-140-3 PANEL 2 (THRU M140-3 TX)	5516	A	14410	M-140-3 VENTILATION SKID FAN	3#2 / 1-1/2"	#6	3	125	2
3						5345	B	14410						4
5						6160	C	14410						6
7	50	3	3#8 / 3/4"	#10	CRANE	TBD	A	582	ROOF SYSTEM MOTORS	3#12 / 3/4"	#12	3	20	8
9						TBD	B	582						10
11						TBD	C	582						12
13	100	3	3#3 / 1"	#8	GROUND LEVEL 480V DISCONNECT	–	A	582	ROOF SYSTEM MOTORS	3#12 / 3/4"	#12	3	20	14
15						–	B	582						16
17						–	C	582						18
19	20	3	3#12 / 3/4"	#12	CEILING FAN	582	A							20
21						582	B							22
23						582	C							24
25							A							26
27							B							28
29							C							30
31							A							32
33							B							34
35							C							36
37							A							38
39							B							40
41							C							42

TOTAL PHASE A LOAD = 21.7 KVA
TOTAL PHASE B LOAD = 21.5 KVA
TOTAL PHASE C LOAD = 22.3 KVA
TOTAL CONNECTED LOAD = 65.5 KVA

NOTES:

M-140-3 PANEL 1 SCHEDULE (C3)
SCALE: NTS

PANELBOARD NO: M-140-3 PANEL 2
PANELBOARD TYPE: SQUARE D NQOD
PANEL LOCATION: GROUND LEVEL
SUPPLIED FROM: M140-3 PANEL 1

SC RATING: 22 KAIC
MOUNTING: SURFACE
VOLTAGE: 208Y/120V, 3-PHASE, 4-WIRE

100 AMP MAIN BREAKER
100 AMP BUS (COPPER)

CKT NO.	TRIP AMPS	NO. POLES	WIRE / CONDUIT	GND. WIRE	LOAD SERVED	LOAD VA	ϕ	LOAD VA	LOAD SERVED	WIRE / CONDUIT	GND. WIRE	NO. POLES	TRIP AMPS	CKT NO.
1	20	1	2#12 / 3/4"	#12	RECEPTACLES GROUND LEVEL	1260	A	180	GAMMA ALARM RECEPTACLE LEVEL 2	2#12 / 3/4"	#12	1	20	2
3	20	1	2#12 / 3/4"	#12	RECEPTACLES LEVEL 1	1080	B	200	LOCAL CONTROL PANEL	2#12 / 3/4"	#12	1	20	4
5	20	1	2#12 / 3/4"	#12	RECEPTACLES LEVEL 2	1080	C	180	RECEPTACLE NEAR PANEL	2#12 / 3/4"	#12	1	20	6
7	20	1	2#12 / 3/4"	#12	RECEPTACLES LEVEL 3	720	A	200	ROOF CONTROL PANEL	2#12 / 3/4"	#12	1	20	8
9	20	1	2#12 / 3/4"	#12	RECEPTACLES CRANE LEVEL	360	B	100	PASSAGEWAY MAG DOOR LOCK	2#12 / 3/4"	#12	1	20	10
11	20	1	2#12 / 3/4"	#12	LIGHTING GROUND LEVEL	1800	C	180	VACUUM RECEPTACLE LEVEL 1	2#12 / 3/4"	#12	1	20	12
13	20	1	2#12 / 3/4"	#12	LIGHTING LEVEL 1	1440	A	96	PASSAGEWAY LIGHTING (NOTE 1)	2#12 / 3/4"	#12	1	20	14
15	20	1	2#12 / 3/4"	#12	LIGHTING LEVEL 2	480	B	1000	PASSAGEWAY HEATER (NOTE 1)	2#12 / 3/4"	#12	2	15	16
17	20	1	2#12 / 3/4"	#12	LIGHTING LEVEL 3	1440	C	1000						18
19	20	1	2#12 / 3/4"	#12	LIGHTING CRANE LEVEL	240	A	180	VACUUM RECEPTACLE LEVEL 1	2#12 / 3/4"	#12	1	20	20
21	20	1	2#12 / 3/4"	#12	LIGHTING EXTERIOR	1565	B	360	HVAC SKID RECEPTACLES	2#12 / 3/4"	#12	1	20	22
23	20	1	2#12 / 3/4"	#12	LIGHTING CENTRAL STAIR	480	C							24
25	20	1	2#12 / 3/4"	#12	LIGHTING SOUTH STAIR	1200	A							26
27	20	1	2#12 / 3/4"	#12	INTERCOM SYSTEM EQUIPMENT	200	B							28
29							C							30
31							A							32
33							B							34
35							C							36
37							A							38
39							B							40
41							C							42

TOTAL PHASE A LOAD = 5.5 KVA
TOTAL PHASE B LOAD = 5.3 KVA
TOTAL PHASE C LOAD = 6.2 KVA
TOTAL CONNECTED LOAD = 17.0 KVA

NOTES: 1. INCLUDED ONLY FOR "NO STORAGE ANNEX" BID OPTION

M-140-3 PANEL 2 SCHEDULE (A1)
SCALE: NTS

PANELBOARD NO: M-140-3 PANEL 3
PANELBOARD TYPE: SQUARE D NQOD
PANEL LOCATION: GROUND LEVEL
SUPPLIED FROM: COMPLEX LOAD HOUSE PER BID OPTION

SC RATING: 65 KAIC
MOUNTING: SURFACE
VOLTAGE: 480V, 3-PHASE, 3-WIRE

400 AMP MAIN BREAKER
400 AMP BUS (COPPER)

CKT NO.	TRIP AMPS	NO. POLES	WIRE / CONDUIT	GND. WIRE	LOAD SERVED	LOAD VA	ϕ	LOAD VA	LOAD SERVED	WIRE / CONDUIT	GND. WIRE	NO. POLES	TRIP AMPS	CKT NO.
1	150	3	3#1/0 / 1-1/2"	#6	M-140-3 HVAC SKID ELECTRIC COIL	37000	A	1667	UNIT HEATER EUH-1	3#12 / 3/4"	#12	3	15	2
3						37000	B	1667						4
5						37000	C	1667						6
7	50	3	3#8 / 3/4"	#10	M-140-3 HVAC SKID HEAT PUMP	12609	A	1667	UNIT HEATER EUH-2	3#12 / 3/4"	#12	3	15	8
9						12609	B	1667						10
11						12609	C	1667						12
13	150	3	3#1/0 / 1-1/2"	#6	M-140-4 HVAC SKID ELECTRIC COIL	37000	A	1667	UNIT HEATER EUH-3	3#12 / 3/4"	#12	3	15	14
15						37000	B	1667						16
17						37000	C	1667						18
19	50	3	3#8 / 3/4"	#10	M-140-4 HVAC SKID HEAT PUMP	12609	A	1667	UNIT HEATER EUH-4	3#12 / 3/4"	#12	3	15	20
21						12609	B	1667						22
23						12609	C	1667						24
25	40	3	3#8 / 3/4"	#10	DRE-7 HVAC SKID HEAT PUMP	9644	A	1667	UNIT HEATER EUH-5	3#12 / 3/4"	#12	3	15	26
27						9644	B	1667						28
29						9644	C	1667						30
31	15	3	3#12 / 3/4"	#12	UNIT HEATER EUH-6	1667	A	1000	UNIT HEATER EUH-8	3#12 / 3/4"	#12	3	15	32
33						1667	B	1000						34
35						1667	C	1000						36
37	15	3	3#12 / 3/4"	#12	UNIT HEATER EUH-7	1667	A		SURGE PROTECTION (NOTE 1)			3	20	38
39						1667	B							40
41						1667	C							42

TOTAL PHASE A LOAD = 121.5 KVA
TOTAL PHASE B LOAD = 121.5 KVA
TOTAL PHASE C LOAD = 121.5 KVA
TOTAL CONNECTED LOAD = 364.6 KVA

NOTES: 1. REFER TO MANUFACTURER'S REQUIREMENTS FOR CB AND WIRING SIZE

M-140-3 PANEL 3 SCHEDULE (A3)
SCALE: NTS

SYM	DESCRIPTION	DATE	APPR
0	ISSUED FOR CONSTRUCTION	10/28/2016	CBC

NAVFAC

STATE OF MAINE
JASON M. BEAULIEU
No. 13441
LICENSED PROFESSIONAL ENGINEER
10/28/16
SEAL

Colby Company engineering
A/E INFO

APPROVED BY: David W. Trumpfeld
FOR COMMANDER NAVFAC
ACTIVITY: TIM FISHER, C. 2370.6 BRANCH HEAD
SATISFACTORY TO DATE 10/28/2016
DES JMB DRW JMB CHK MRL
PM/DM: PETER STOCKLESS
BRANCH MANAGER: IAN BODWELL
FEA/DPM&E: AMIN BAHROUR
FIRE PROTECTION: PATRICK BAKAJ

DEPARTMENT OF THE NAVY
NAVAL FACILITIES ENGINEERING COMMAND
PUBLIC WORKS DEPARTMENT - MAINE
NAVAL FACILITIES ENGINEERING COMMAND – MID-ATLANTIC
NAVAL SHIPYARD - PORTSMOUTH, NH
PORTSMOUTH NAVAL SHIPYARD
KITTERY, ME
DRY DOCK #1 DEFUELING COMPLEX
M-140 COMPLEX
ELECTRICAL SCHEDULES

EPROJECT NO.: 1363311
CONSTR. CONTR. NO. N40085-17-C-5002
NAVFAC DRAWING NO. 12734960
SHEET 177 OF 188
E-601 | DD1-16-1041

DRAWFORM REVISION: 10 OCTOBER 2014

10/28/2016 6:53:04 AM X:\297 PORTSMOUTH NAVAL SHIPYARD\297.005.001 - DDH DEFUELING COMPLEX DESIGN\DRAWINGS\M140\SHEETS\E-601.DWG

PANELBOARD NO: M-140-4 PANEL 1
PANELBOARD TYPE: SQUARE D NQOD
PANEL LOCATION: GROUND LEVEL
SUPPLIED FROM: M140-3 PANEL 0

SC RATING: 65 KAIC
MOUNTING: SURFACE
VOLTAGE: 480V, 3-PHASE, 3-WIRE

200 AMP MAIN BREAKER
225 AMP BUS (COPPER)

CKT NO.	TRIP AMPS	NO. POLES	WIRE / CONDUIT	GND. WIRE	LOAD SERVED	LOAD VA	ϕ	LOAD VA	LOAD SERVED	WIRE / CONDUIT	GND. WIRE	NO. POLES	TRIP AMPS	CKT NO.
1	50	3	3#8 / 3/4"	#10	PANEL M-140-4 PANEL 2 (THRU M140-4 TX)	3740	A	14410	M-140-4 VENTILATION SKID FAN	3#2 / 1-1/2"	#6	3	125	2
3						4421	B	14410						4
5						4400	C	14410						6
7	50	3	3#8 / 3/4"	#10	CRANE	TBD	A	582	ROOF SYSTEM MOTORS	3#12 / 3/4"	#12	3	20	8
9						TBD	B	582						10
11						TBD	C	582						12
13							A	582	ROOF SYSTEM MOTORS	3#12 / 3/4"	#12	3	20	14
15							B	582						16
17							C	582						18
19							A							20
21							B							22
23							C							24
25							A							26
27							B							28
29							C							30
31							A							32
33							B							34
35							C							36
37							A							38
39							B							40
41							C							42

TOTAL PHASE A LOAD = 19.3 KVA
TOTAL PHASE B LOAD = 20.0 KVA
TOTAL PHASE C LOAD = 20.0 KVA
TOTAL CONNECTED LOAD = 59.3 KVA

NOTES:

M-140-4 PANEL 1 SCHEDULE (C1)
SCALE: NTS

PANELBOARD NO: M-140-4 PANEL 2
PANELBOARD TYPE: SQUARE D NQOD
PANEL LOCATION: GROUND LEVEL
SUPPLIED FROM: M140-4 PANEL 1

SC RATING: 22 KAIC
MOUNTING: SURFACE
VOLTAGE: 208Y/120V, 3-PHASE, 4-WIRE

100 AMP MAIN BREAKER
100 AMP BUS (COPPER)

CKT NO.	TRIP AMPS	NO. POLES	WIRE / CONDUIT	GND. WIRE	LOAD SERVED	LOAD VA	ϕ	LOAD VA	LOAD SERVED	WIRE / CONDUIT	GND. WIRE	NO. POLES	TRIP AMPS	CKT NO.
1	20	1	2#12 / 3/4"	#12	RECEPTACLES GROUND LEVEL	1080	A	200	LOCAL CONTROL PANEL	2#12 / 3/4"	#12	1	20	2
3	20	1	2#12 / 3/4"	#12	RECEPTACLES LEVEL 1	900	B	180	RECEPTACLE NEAR PANEL	2#12 / 3/4"	#12	1	20	4
5	20	1	2#12 / 3/4"	#12	RECEPTACLES LEVEL 2	900	C	200	ROOF CONTROL PANEL	2#12 / 3/4"	#12	1	20	6
7	20	1	2#12 / 3/4"	#12	RECEPTACLES LEVEL 3	720	A	180	GAMMA ALARM RECEPTACLE LEVEL 2	2#12 / 3/4"	#12	1	20	8
9	20	1	2#12 / 3/4"	#12	RECEPTACLES CRANE LEVEL	360	B	180	VACUUM RECEPTACLE LEVEL 1	2#12 / 3/4"	#12	1	20	10
11	20	1	2#12 / 3/4"	#12	LIGHTING GROUND LEVEL	1920	C	180	VACUUM RECEPTACLE LEVEL 1	2#12 / 3/4"	#12	1	20	12
13	20	1	2#12 / 3/4"	#12	LIGHTING LEVEL 1	960	A	360	HVAC SKID RECEPTACLES	2#12 / 3/4"	#12	1	20	14
15	20	1	2#12 / 3/4"	#12	LIGHTING LEVEL 2	1680	B							16
17	20	1	2#12 / 3/4"	#12	LIGHTING LEVEL 3	720	C							18
19	20	1	2#12 / 3/4"	#12	LIGHTING CRANE LEVEL	240	A							20
21	20	1	2#12 / 3/4"	#12	LIGHTING EXTERIOR	1121	B							22
23	20	1	2#12 / 3/4"	#12	LIGHTING CENTRAL STAIR	480	C							24
25							A							26
27							B							28
29							C							30
31							A							32
33							B							34
35							C							36
37							A							38
39							B							40
41							C							42

TOTAL PHASE A LOAD = 3.7 KVA
TOTAL PHASE B LOAD = 4.4 KVA
TOTAL PHASE C LOAD = 4.4 KVA
TOTAL CONNECTED LOAD = 12.6 KVA

NOTES:

M-140-4 PANEL 2 SCHEDULE (C3)
SCALE: NTS

TYPE	DESCRIPTION	VOLT	MANUFACTURER (OR EQUAL)	LAMPS	MOUNTING	NOTES
C	3' LONG WORK LIGHT WITH POLYCARBONATE SHELL AND ULTRA DURABLE CORD AND FEED THRU PLUG	120	LEXCOMMANDER B6700-B	(3) – 40W CFL	WALL	WALL MOUNT FIXTURE ON HOOKS 96" AFF UNLESS OTHERWISE NOTED COORDINATE WITH ARCHITECTURAL DETAIL C4 ON SHEET A-506
AA	EXTERIOR WALL MOUNTED LED FIXTURE WITH BLACK FINISH AND TYPE IV DISTRIBUTION	120	HUBBELL LMC-30LU-4K-4-2	70W LED	WALL	CONTROL LIGHT FIXTURES THROUGH TIMER SWITCH. MOUNT FIXTURES 12FT AFF UNLESS OTHERWISE NOTED. SEE ARCHITECTURAL SHEETS FOR MOUNTING DETAILS.
BB	LED FLOOD LIGHT FIXTURE WITH BLACK FINISH AND MEDIUM DISTRIBUTION	120	HUBBELL MLED-80LU-5K-M-BL	187W LED	WALL	CONTROL LIGHT FIXTURES THROUGH TIMER SWITCH. MOUNT FIXTURES 40FT AFF UNLESS OTHERWISE NOTED. SEE ARCHITECTURAL SHEETS FOR MOUNTING DETAILS.
CC	EXTERIOR BATTERY BACKED UP WALL MOUNTED LED EMERGENCY LIGHT FIXTURE WITH BLACK FINISH	120	DUAL LITE PGB-HTR	15W LED	WALL	MOUNT FIXTURES 7FT AFF UNLESS OTHERWISE NOTED. SEE ARCHITECTURAL SHEETS FOR MOUNTING DETAILS.
	LED EXIT SIGN PROVIDED WITH MAINTENANCE FREE NICKEL-CADMIUM BATTERY AND SELF-DIAGNOSITC ELECTRONICS.	120	DUAL LITE SESRWEI	LED	WALL	
	DUAL HEAD HIGH LUMEN OUTPUT EMERGENCY FIXTURE PROVIDED WITH THERMOPLASTIC HOUSING, LITHIUM IRON PHOSPHATE BATTERY, AND SELF-DIAGNOSTIC ELECTRONICS	120	DUAL LITE EVHC12I-06LBC	6W LED	WALL	

LIGHT FIXTURE SCHEDULE (A1)
SCALE: NTS

SYM	DESCRIPTION	DATE	APPR
0	ISSUED FOR CONSTRUCTION	10/28/2016	CBC

NAVFAC

STATE OF MAINE
JASON M. BEAULIEU
No. 13441
LICENSED PROFESSIONAL ENGINEER
10/28/16
SEAL

Colby Company engineering
A/E INFO

APPROVED
David W. Thurnfeld
FOR COMMANDER NAVFAC

ACTIVITY
TIM FISHER
C. 2370.6 BRANCH HEAD

SATISFACTORY TO DATE 10/28/2016
DES JMB DRW JMB CHK MRL
PMDM PETER STOCKLESS
BRANCH MANAGER IAN BODWELL
FEA/DPM&E AMIN BAHROUR
FIRE PROTECTION PATRICK BAKAJ

DEPARTMENT OF THE NAVY
NAVAL FACILITIES ENGINEERING COMMAND
PUBLIC WORKS DEPARTMENT - MAINE
NAVAL FACILITIES ENGINEERING COMMAND ~ MID-ATLANTIC
NAVAL SHIPYARD - PORTSMOUTH, NH
PORTSMOUTH NAVAL SHIPYARD
KITTERY, ME
DRY DOCK #1 DEFUELING COMPLEX
M-140 COMPLEX
ELECTRICAL SCHEDULES

EPROJECT NO.: 1363311
CONSTR. CONTR. NO. N40085-17-C-5002
NAVFAC DRAWING NO. 12734961
SHEET 178 OF 188
E-602 DD1-16-1042

DRAWFORM REVISION: 10 OCTOBER 2014

10/28/2016 6:53:08 AM X:\297 PORTSMOUTH NAVAL SHIPYARD\297.005.001 - DD#1 DEFUELING COMPLEX DESIGN\DRAWINGS\M140\SHEETS\E-602.DWG

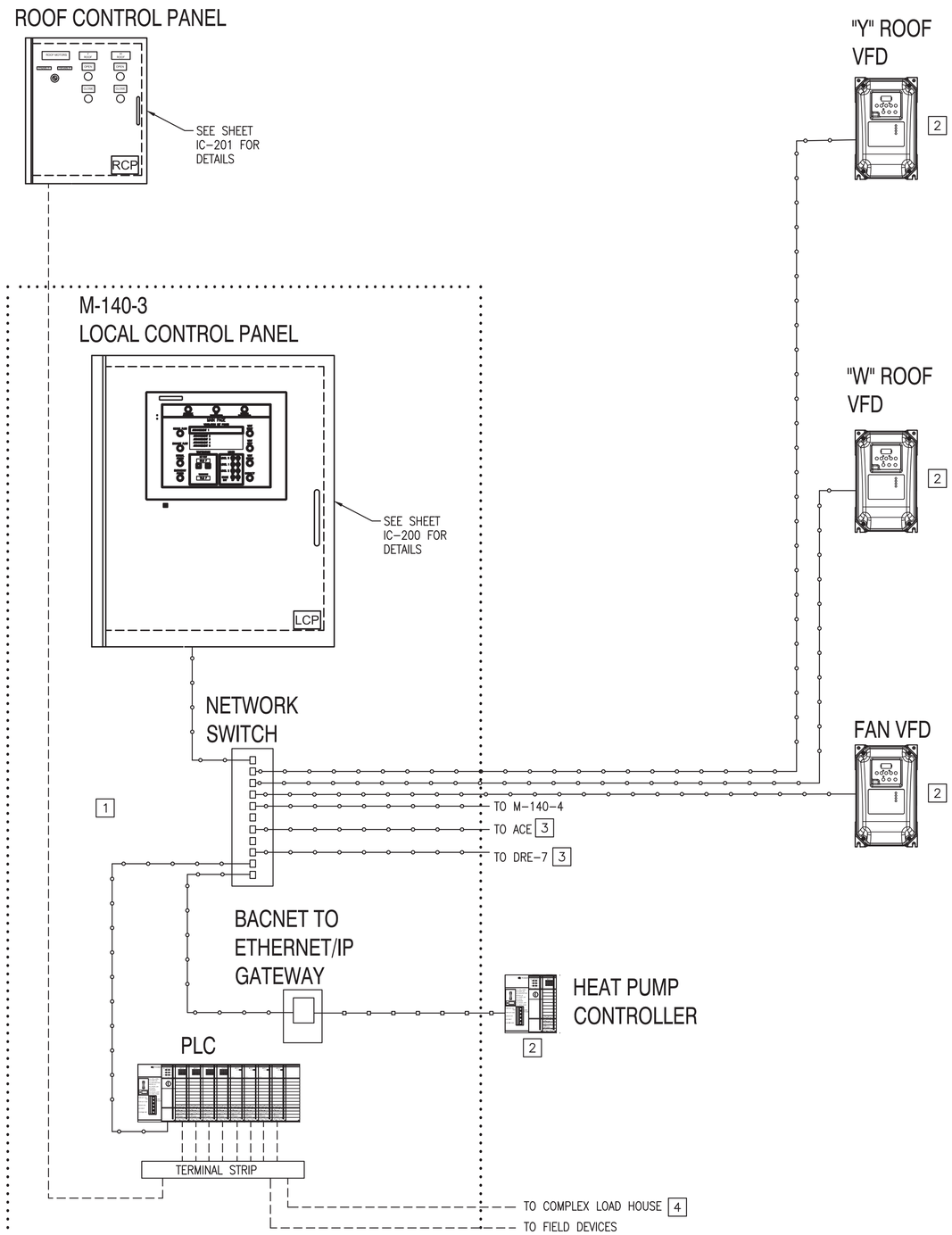

LOCAL CONTROL NETWORK SCHEMATIC (A1)

SCALE: NTS

NOTES

1. SEE SHEET E-001 FOR LEGEND ABBREVIATIONS AND GENERAL NOTES.
2. THE M-140 COMPLEX REQUIRES A CONTROL SYSTEM FOR EACH OF THE TOWERS, M-140-3 AND M-140-4, FOR A TOTAL OF TWO (2).
3. ALL NETWORKING AND CONTROL WIRING SHALL BE INSTALLED IN EMT CONDUIT.

INPUT/OUTPUT SUMMARY TABLE	
DESCRIPTION	IO TYPE
CRANE PLATFORM LIGHTING CONTROL	DO
CRANE PLATFORM LIGHTING SWITCH	DI
W ROOF CLOSE COMMAND	DO
W ROOF CLOSE PB	DI
W ROOF CLOSE PB LED INDICATOR	DO
W ROOF CLOSE SPEED-CHANGE LIMIT SWITCH	DI
W ROOF CLOSED POSITION LIMIT SWITCH	DI
W ROOF MOTORS ENABLE SWITCH	DI
W ROOF MOTORS ENABLE SWITCH STATUS	DI
W ROOF OPEN COMMAND	DO
W ROOF OPEN PB	DI
W ROOF OPEN PB LED INDICATOR	DO
W ROOF OPEN POSITION LIMIT SWITCH	DI
W ROOF OPEN SPEED-CHANGE LIMIT SWITCH	DI
ENCLOSURE DIFF. PRESSURE TRANSMITTER	AI
LEVEL 1 LIGHTING CONTROL	DO
LEVEL 1 LIGHTING SWITCH	DI
LEVEL 2 LIGHTING CONTROL	DO
LEVEL 2 LIGHTING SWITCH	DI
LEVEL 3 LIGHTING CONTROL	DO
LEVEL 3 LIGHTING SWITCH	DI
FAN INLET FLOW MEASURING STATION	AI
FAN LED STATUS INDICATOR	DO
FAN PROVING DP SWITCH	DI
FAN START COMMAND	DO
FAN START PB	DI
FAN STOP PB	DI
ENGINEERED VENT DAMPER CONTROL 1	AO
ENGINEERED VENT DAMPER CONTROL 2	AO
ENGINEERED VENT FLOW RATE 1	AI
ENGINEERED VENT FLOW RATE 2	AI
NO. 1 GEN. RETURN VENT DAMPER CONTROL	AO
NO. 2 GEN. RETURN VENT DAMPER CONTROL	AO
EXHAUST AIR DAMPER CONTROL	AO
EXHAUST AIR FLOW MEASURING STATION	AI
AIR PARTICULATE SAMPLING PRESSURE SENSOR	AI
STORAGE AREA DIFF. PRESSURE TRANSMITTER	AI
SUPPLY AIR TEMPERATURE	AI
SPACE TEMPERATURE	AI
SUPPLY AIR DAMPER CONTROL	AO
ELECTRIC HEATER CONTROL	AO
Y ROOF CLOSE COMMAND	DO
Y ROOF CLOSE PB LED INDICATOR	DO
Y ROOF CLOSE SPEED-CHANGE LIMIT SWITCH	DI
Y ROOF CLOSED POSITION LIMIT SWITCH	DI
Y ROOF MOTORS ENABLE SWITCH	DI
Y ROOF MOTORS ENABLE SWITCH STATUS	DI
Y ROOF OPEN COMMAND	DO
Y ROOF OPEN PB	DI
Y ROOF OPEN PB LED INDICATOR	DO
Y ROOF OPEN POSITION LIMIT SWITCH	DI
Y ROOF OPEN SPEED-CHANGE LIMIT SWITCH	DI

INPUT/OUTPUT LIST (A4)

SCALE: NTS

LEGEND

- UTP CAT5E, ETHERNET/IP
- HARDWIRED 2-CONDUCTOR 16 AWG
- 2-WIRE, SHIELDED, BACNET MS/TP
- MULTI-CONDUCTOR CABLE

AI ANALOG INPUT
AO ANALOG OUTPUT
DI DISCRETE INPUT
DO DISCRETE OUTPUT

KEYED NOTES

1. MAIN LOCAL CONTROL PANEL COMPONENTS SHOWN OUTSIDE THE ENCLOSURE FOR CLARITY.
2. COORDINATE WITH MECHANICAL CONTRACTOR.
3. ROUTE TO SEPARATE ENCLOSURES THOUGH PASSAGEWAYS. APPLIES ONLY TO M-140-3 LOCAL CONTROL PANEL.
4. ROUTE TO LOAD HOUSE COMPLEX THROUGH UNDERGROUND DUCTS (SEE SITE & FOUNDATIONS DRAWINGS). APPLIES ONLY TO M-140-3 LOCAL CONTROL PANEL.

SYM	DESCRIPTION	DATE	APPR
0	ISSUED FOR CONSTRUCTION	10/28/2016	CBC

NAVFAC

STATE OF MAINE JASON M. BEAULIEU No. 13441 LICENSED PROFESSIONAL ENGINEER 10/28/16 SEAL

Colby Company engineering A/E INFO

APPROVED David W. Shurtleff FOR COMMANDER NAVFAC

ACTIVITY: TIM FISHER C. 2370.6 BRANCH HEAD

SATISFACTORY TO DATE 10/28/2016

DES JMB DRW JMB CHK MRL

PM/DM PETER STOCKLESS

BRANCH MANAGER IAN BODWELL

FEAD/PM&E AMIN BAHROUR

FIRE PROTECTION PATRICK BAKAJ

DEPARTMENT OF THE NAVY
NAVAL FACILITIES ENGINEERING COMMAND
PUBLIC WORKS DEPARTMENT - MAINE

NAVAL FACILITIES ENGINEERING COMMAND ~ MID-ATLANTIC
NAVAL SHIPYARD - PORTSMOUTH, NH

PORTSMOUTH NAVAL SHIPYARD
KITTERY, ME

DRY DOCK #1 DEFUELING COMPLEX
M-140 COMPLEX

LOCAL CONTROL SYSTEM NETWORK AND POINTS LIST

EPROJECT NO.: 1363311

CONSTR. CONTR. NO. N40085-17-C-5002

NAVFAC DRAWING NO. 12734962

SHEET 179 OF 188

IC-101 | DD1-16-1043

DRAWFORM REVISION: 10 OCTOBER 2014

10/28/2016 6:53:16 AM X:\297 PORTSMOUTH NAVAL SHIPYARD\297.005.001 - DD#1 DEFUELING COMPLEX DESIGN\DRAWINGS\M140\SHEETS\IC-101.DWG

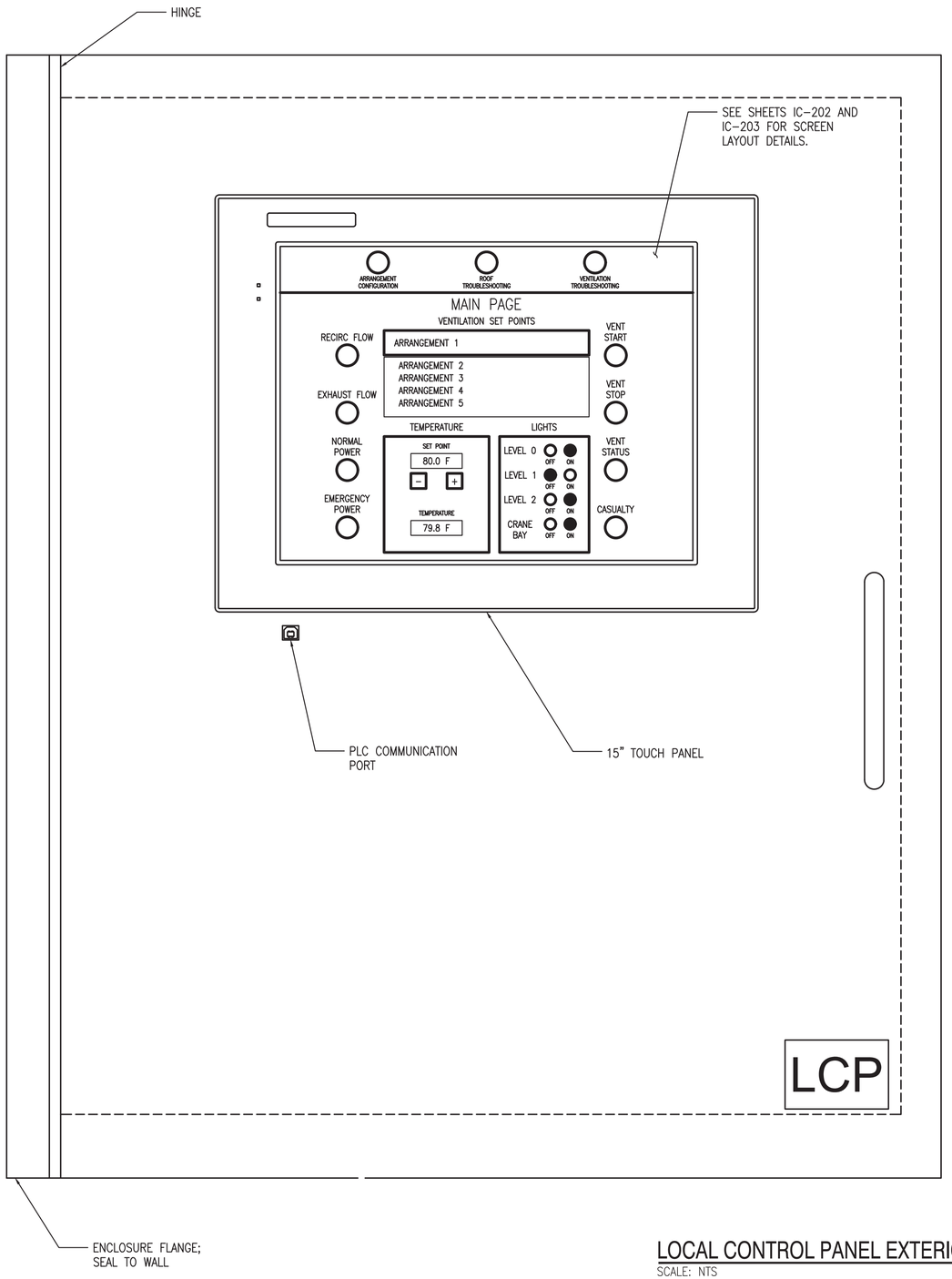

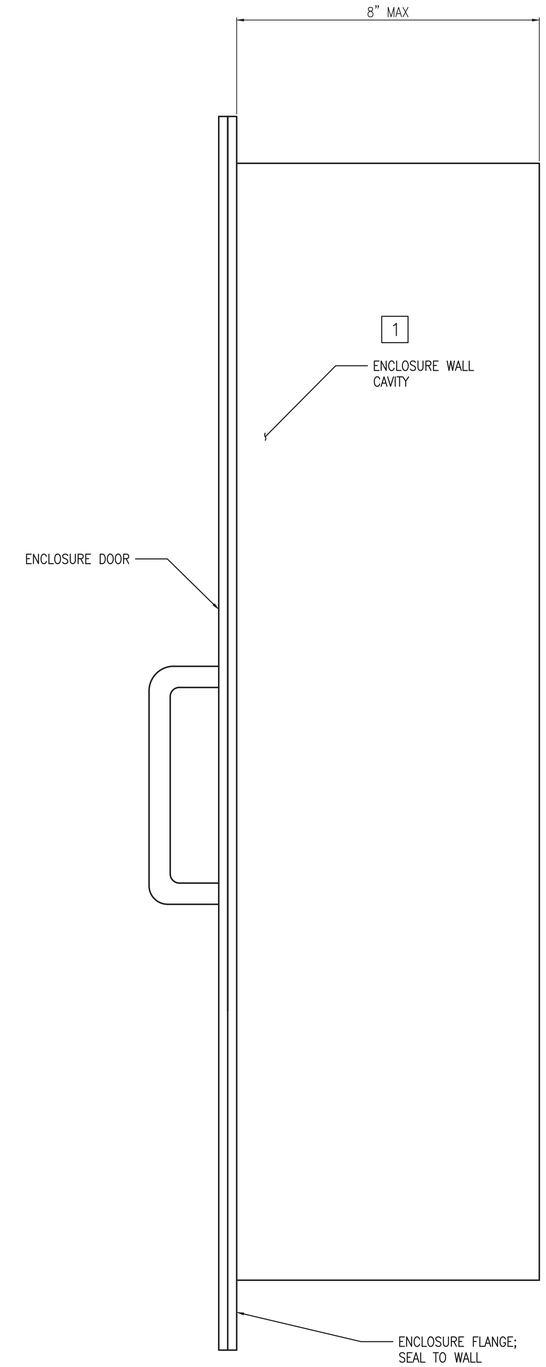

LOCAL CONTROL PANEL EXTERIOR

SCALE: NTS

A4

NOTES

1. SEE SHEET E-001 FOR LEGEND ABBREVIATIONS AND GENERAL NOTES.
2. THE M-140 COMPLEX REQUIRES A CONTROL SYSTEM FOR EACH OF THE TOWERS, M-140-3 AND M-140-4 FOR A TOTAL OF TWO (2).

KEYED NOTES

1. LOCAL CONTROL PANEL IS POWDER COATED STEEL CONSTRUCTION WITH DOOR FLUSH-MOUNTED TO WALL. CONTROL SYSTEM CONTRACTOR TO COORDINATE REQUIRED ENCLOSURE DIMENSIONS WITH STRUCTURAL CONTRACTOR. ENCLOSURE WALL CAVITY DIMENSIONS ARE APPROXIMATELY 25WX29HX8D.

SYM	DESCRIPTION	DATE	APPR
0	ISSUED FOR CONSTRUCTION	10/28/2016	CBC

NAVFAC

STATE OF MAINE
JASON M. BEAULIEU
No. 13441
LICENSED PROFESSIONAL ENGINEER
10/28/16
SEAL

Colby Company engineering
A/E INFO

APPROVED
DAVID W. TRUNFELD
FOR COMMANDER NAVFAC

ACTIVITY
TIM FISHER
C. 2370.6 BRANCH HEAD

SATISFACTORY TO DATE 10/28/2016

DES	DRW	CHK
JMB	JMB	MRL

PM/DM PETER STOCKLESS
BRANCH MANAGER IAN BODWELL
FEAD/PM&E AMIN BAHROUR
FIRE PROTECTION PATRICK BAKAJ

DEPARTMENT OF THE NAVY
NAVAL FACILITIES ENGINEERING COMMAND
PUBLIC WORKS DEPARTMENT - MAINE
NAVAL FACILITIES ENGINEERING COMMAND ~ MID-ATLANTIC
NAVAL SHIPYARD - PORTSMOUTH, NH
PORTSMOUTH NAVAL SHIPYARD
KITTERY, ME
DRY DOCK #1 DEFUELING COMPLEX
M-140 COMPLEX
LOCAL CONTROL PANEL EXTERIOR

EPROJECT NO.: 1363311
CONSTR. CONTR. NO: N40085-17-C-5002
NAVFAC DRAWING NO. 12734963
SHEET 180 OF 188
IC-200 DD1-16-1044

DRAWFORM REVISION: 10 OCTOBER 2014

10/28/2016 6:53:21 AM X:\297 PORTSMOUTH NAVAL SHIPYARD\297.005.001 - DD#1 DEFUELING COMPLEX DESIGN\DRAWINGS\M140\SHEETS\IC-200.DWG

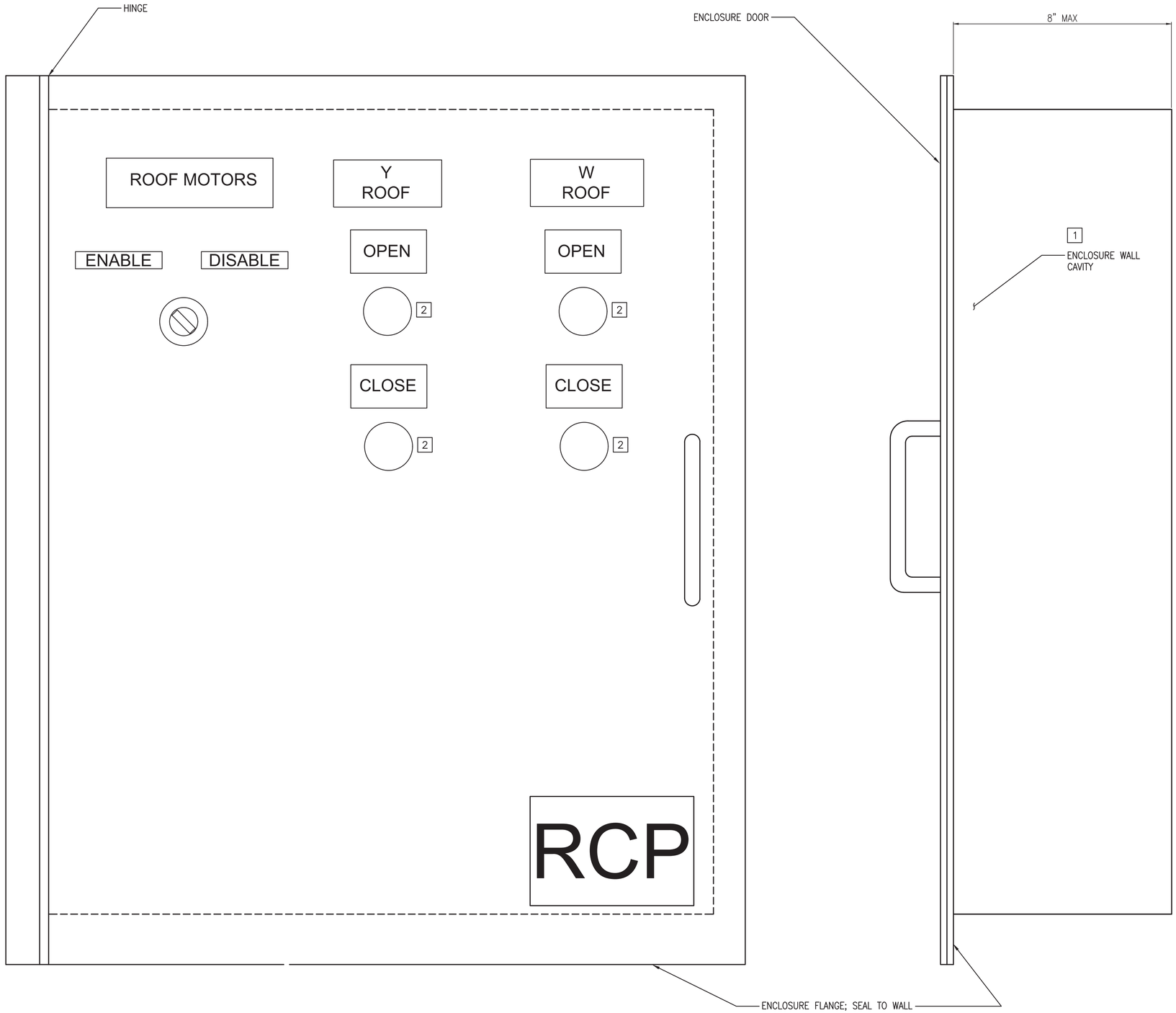

ROOF CONTROL PANEL EXTERIOR (A4)
SCALE: NTS

NOTES

1. SEE SHEET E-001 FOR LEGEND ABBREVIATIONS AND GENERAL NOTES.
2. THE M-140 COMPLEX REQUIRES A ROOF CONTROL SYSTEM FOR EACH OF THE TOWERS, M-140-3 AND M-140-4, FOR A TOTAL OF TWO (2).

LEGEND

- KEYED SELECTOR SWITCH
- MOMENTARY PUSHBUTTON

KEYED NOTES

1. ROOF CONTROL PANEL IS POWDER COATED STEEL CONSTRUCTION WITH DOOR FLUSH-MOUNTED TO WALL. CONTROL SYSTEM CONTRACTOR TO COORDINATE REQUIRED ENCLOSURE DIMENSIONS WITH OTHER TRADES. ENCLOSURE WALL CAVITY DIMENSIONS ARE APPROXIMATELY 12WX15HX4D.
2. PUSH BUTTONS SHALL BE FLUSH STYLE BUTTONS TO PREVENT INADVERTENT OPERATION.

SYM	DESCRIPTION	DATE	APPR
0	ISSUED FOR CONSTRUCTION	10/28/2016	CBC

NAVFAC

STATE OF MAINE
JASON M. BEAULIEU
No. 13441
LICENSED PROFESSIONAL ENGINEER
10/28/16
SEAL

Colby Company engineering
A/E INFO

APPROVED
Commander, NAVFAC
David W. Trunfield
FOR COMMANDER NAVFAC

ACTIVITY
TIM FISHER
C. 2370.6 BRANCH HEAD

SATISFACTORY TO DATE 10/28/2016

DES	DRW	CHK
JMB	JMB	MRL

PM/DM: PETER STOCKLESS
BRANCH MANAGER: IAN BODWELL
FEA/DPM&E: AMIN BAHROUR
FIRE PROTECTION: PATRICK BAKAJ

DEPARTMENT OF THE NAVY
NAVAL FACILITIES ENGINEERING COMMAND
PUBLIC WORKS DEPARTMENT - MAINE
NAVAL FACILITIES ENGINEERING COMMAND – MID-ATLANTIC
NAVAL SHIPYARD - PORTSMOUTH, NH
PORTSMOUTH NAVAL SHIPYARD
KITTERY, ME
DRY DOCK #1 DEFUELING COMPLEX
M-140 COMPLEX
ROOF CONTROL PANEL EXTERIOR

EPROJECT NO.: 1363311
CONSTR. CONTR. NO. N40085-17-C-5002
NAVFAC DRAWING NO. 12734964
SHEET 181 OF 188
IC-201 | DD1-16-1045

DRAWFORM REVISION: 10 OCTOBER 2014

10/28/2016 6:53:26 AM X:\297 PORTSMOUTH NAVAL SHIPYARD\297.005.001 - DD#1 DEFUELING COMPLEX DESIGN\DRAWINGS\M140\SHEETS\IC-201.DWG

NOTES

1. SEE SHEET E-001 FOR LEGEND ABBREVIATIONS AND GENERAL NOTES.
2. DIAGRAMS ARE SUGGESTED GUIDANCE FOR SCREEN LAYOUTS. CONTRACTOR IS ALLOWED TO MODIFY AS NECESSARY. SUBMIT PROPOSED SCREEN LAYOUTS PRIOR TO PROGRAMMING.

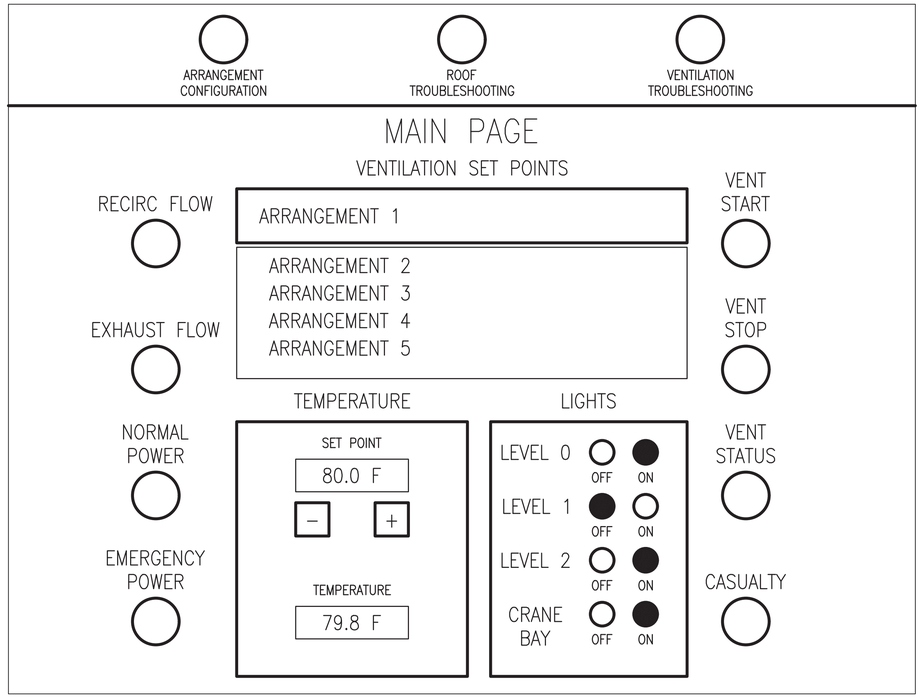

LOCAL CONTROL PANEL MAIN SCREEN (B1)

SCALE: NTS

NOTES:
ARRANGEMENTS (OR PRE-SET CONFIGURATIONS) WILL BE ON A DROP DOWN MENU INITIATED WHEN THE SELECTED ARRANGEMENT IS TOUCHED AND HELD FOR 5 SECONDS. THE ARRANGEMENT SELECTION WILL THEN BRING UP THE CONFIRMATION SCREEN WITH A CONFIRMATION SELECTION: "CONFIRM SELECT ARRANGEMENT X, YES OR NO." WITH THE ARRANGEMENT SETTINGS SHOWN IN THE WINDOW SO THE OPERATOR CAN VERIFY THE ARRANGEMENT THEN SELECT YES OR NO.

RECIRC FLOW AND EXHAUST FLOW ARE INDICATORS THAT LIGHT WHEN THERE IS AIR FLOW IN EACH RESPECTIVE PARTS OF THE VENT SYSTEM. IF FLOW IS NOT PRESENT AN AUDIBLE ALARM SHOULD SOUND AND INDICATOR SHOULD BLINK UNTIL ACKNOWLEDGED AND SILENCED BY PRESSING ON THE INDICATOR. THIS SHOULD POP UP A WINDOW WITH A RESET BUTTON WHICH WILL STOP THE INDICATOR FROM FLASHING IF THIS IS THE INTENDED CONDITION (I.E. SHUTTING THE SYSTEM DOWN), IF NOT THE INDICATOR WILL REMAIN FLASHING UNTIL FLOW HAS RETURNED AND THE RESET BUTTON IS PUSHED. THIS ALARM AND SILENCE CONDITION SHOULD NOT CAUSE ANY OTHER FUNCTION OF THE CONTROL PANEL TO BECOME INOPERABLE.

TEMPERATURE CONTROLS ADJUSTMENT BUTTONS ALLOW INCREMENT AND DECREMENT OF SETPOINT IN 1 DEGREE INTERVALS.

LIGHT CONTROLS ALLOW CONTROL OF LIGHTING ON EACH LEVEL (NOT ALL LEVELS SHOWN). CONTROL PANEL WILL INTEGRATE WITH THREE-WAY CONTROL OF LIGHTING ON CRANE LEVEL.

VENT START AND VENT STOP BUTTONS SHOULD HAVE A DELAY OF 5 SECONDS PROGRAMMED IN SO THE VENT SYSTEM CANNOT BE TURNED OFF BY INADVERTENT CONTACT. PURPOSEFUL SHUTDOWN OF VENTILATION SYSTEM SHALL NOT SOUND A ALARM. VENT STATUS BUTTON WILL DISPLAY A READ ONLY DISPLAY OF THE CONFIGURATION SCREEN FOR THE CURRENT ARRANGEMENT.

CASUALTY BUTTON WILL BRING UP A READ/WRITE DISPLAY OF THE CONFIGURATION SCREEN TO ALLOW IMMEDIATE TEMPORARY CHANGES IN THE VENTILATION SYSTEM. CASUALTY BUTTON WILL NEED TO BE TOUCHED AND HELD FOR 5 SECONDS SO IT CANNOT BE ACCIDENTALLY SELECTED.

TOP ROW OF CONFIGURATION AND TROUBLESHOOTING BUTTONS WILL PROMPT FOR A PIN CODE TO ENTER CONFIGURATION OR TROUBLESHOOTING SCREEN. "ARRANGEMENT CONFIGURATION" BUTTON SHALL OPEN A READ/WRITE DISPLAY OF THE CONFIGURATION SCREEN. "ROOF TROUBLESHOOTING" BUTTON SHALL OPEN ROOF TROUBLE SHOOTING SCREEN. "VENTILATION TROUBLESHOOTING" BUTTON SHALL OPEN VENTILATION TROUBLESHOOTING SCREEN.

ROOF AND VENTILATION TROUBLESHOOTING BUTTONS SHALL FLASH FOR FAULTS OR ERRORS IN RESPECTIVE SYSTEM.

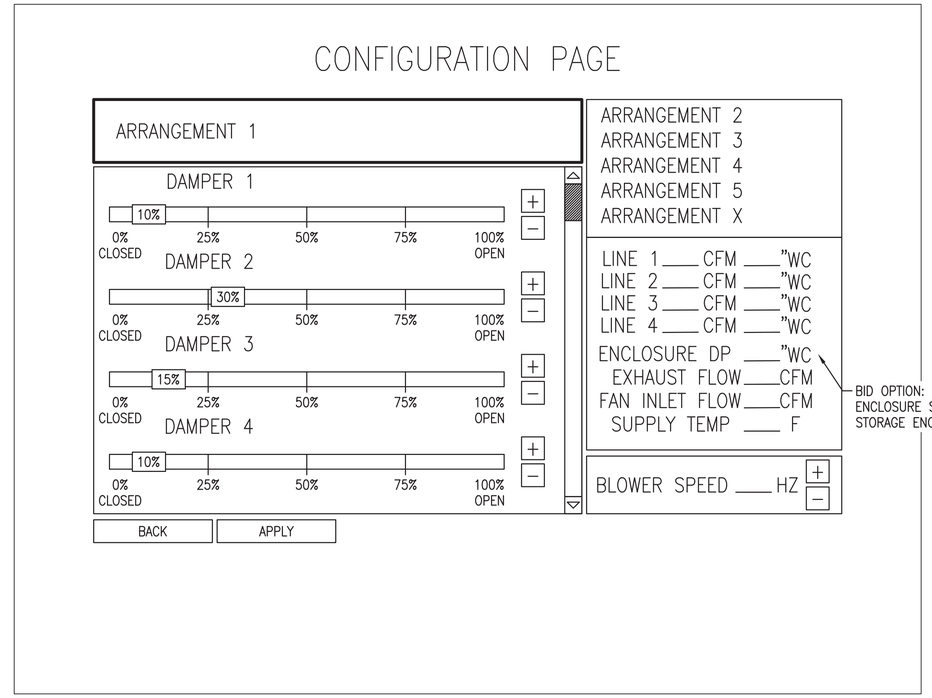

BID OPTION: M-140-3 ENCLOSURE SHOULD SHOW STORAGE ENCLOSURE DP VALUE.

LOCAL CONTROL PANEL CONFIGURATION SCREEN (B3)

SCALE: NTS

NOTES:
THE CONFIGURATION PAGE IS WHERE THE ARRANGEMENTS CAN BE SETUP AND THE INDICATIONS OF AVERAGED (OVER 5 SECONDS) CFMs AND DPs WILL BE SHOWN.

EACH DAMPER IN THE ENCLOSURE VENTILATION SYSTEM WILL HAVE A SLIDER AND FINE ADJUST +/- BUTTONS TO ADJUST THE DAMPER. DAMPER SHALL BE NAMED TO CLEARLY IDENTIFY DAMPER LOCATION.

BLOWER SPEED SHALL INDICATE UNITS TO MATCH VFD CONTROLLER.

THE "BACK" BUTTON WILL RETURN TO THE MAIN SCREEN WITHOUT SAVING ANY CHANGES. THE "APPLY" BUTTON WILL BRING UP A CONFIRMATION SCREEN TO SAVE ALL CHANGES AND THEN RETURN TO THE MAIN SCREEN. DO NOT SHOW APPLY BUTTON WHEN IN READ ONLY MODE OF CONFIGURATION PAGE.

SYM	DESCRIPTION	DATE	APPR
0	ISSUED FOR CONSTRUCTION	10/28/2016	CBC

NAVFAC

STATE OF MAINE — JASON M. BEAULIEU No. 13441 — LICENSED PROFESSIONAL ENGINEER — 10/28/16 — SEAL

Colby Company engineering — A/E INFO

APPROVED (SIGNATURE) — FOR COMMANDER NAVFAC

ACTIVITY: TIM FISHER, C. 2370.6 BRANCH HEAD

SATISFACTORY TO — DATE 10/28/2016

DES	DRW	CHK
JMB	JMB	MRL

PM/DM: PETER STOCKLESS
BRANCH MANAGER: IAN BODWELL
FEA/PM&E: AMIN BAHROUR
FIRE PROTECTION: PATRICK BAKAJ

DEPARTMENT OF THE NAVY
NAVAL FACILITIES ENGINEERING COMMAND
PUBLIC WORKS DEPARTMENT - MAINE
NAVAL FACILITIES ENGINEERING COMMAND – MID-ATLANTIC
NAVAL SHIPYARD - PORTSMOUTH, NH
PORTSMOUTH NAVAL SHIPYARD
KITTERY, ME
DRY DOCK #1 DEFUELING COMPLEX
M-140 COMPLEX
CONTROL PANEL SCREEN LAYOUTS

EPROJECT NO.: 1363311
CONSTR. CONTR. NO.: N40085-17-C-5002
NAVFAC DRAWING NO.: 12734965
SHEET 182 OF 188
IC-202 | DD1-16-1046

DRAWFORM REVISION: 10 OCTOBER 2014

10/28/2016 6:53:30 AM X:\297 PORTSMOUTH NAVAL SHIPYARD\297.005.001 - DD#1 DEFUELING COMPLEX DESIGN\DRAWINGS\M140\SHEETS\IC-202.DWG

NOTES

1. SEE SHEET E-001 FOR LEGEND ABBREVIATIONS AND GENERAL NOTES.
2. DIAGRAMS ARE SUGGESTED GUIDANCE FOR SCREEN LAYOUTS. CONTRACTOR IS ALLOWED TO MODIFY AS NECESSARY. SUBMIT PROPOSED SCREEN LAYOUTS PRIOR TO PROGRAMMING.

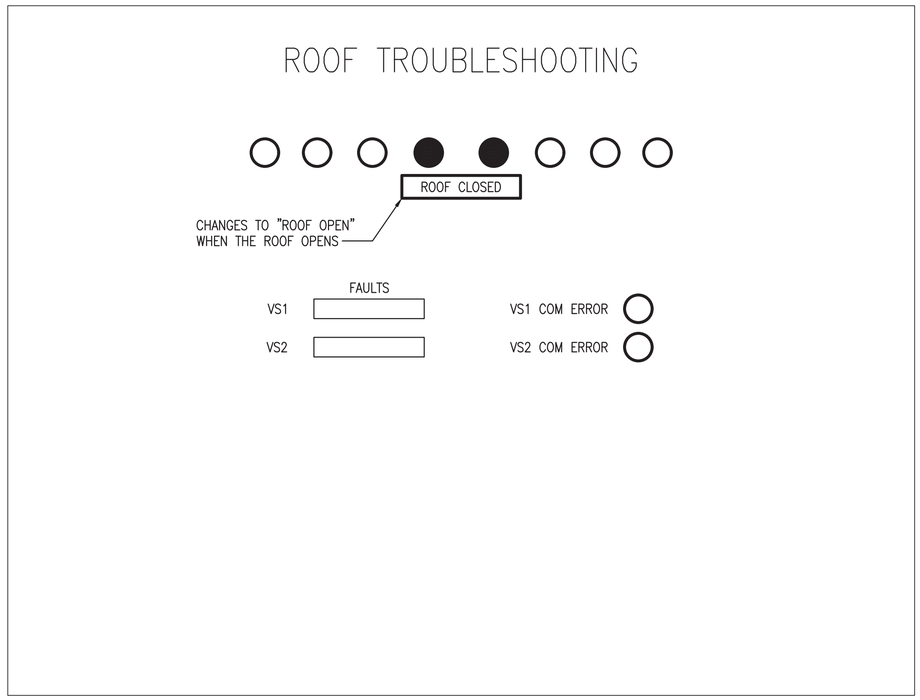

LOCAL CONTROL PANEL ROOF TROUBLE SHOOTING SCREEN (B1)

SCALE: NTS

NOTES:
THIS PAGE WILL BE AVAILABLE FOR ENGINEERS TROUBLESHOOTING ISSUES AND PROBLEMS. ROOF MOTOR DRIVE FAULTS WILL SHOW AT THIS LOCATION AS WELL. THIS ALARM SHOULD NOT CAUSE ANY OTHER FUNCTIONALITY OF THE LCP TO BE LOST.

THIS SCREEN SHALL BE ACCESSED FROM BUTTON AT TOP OF MAIN PAGE.

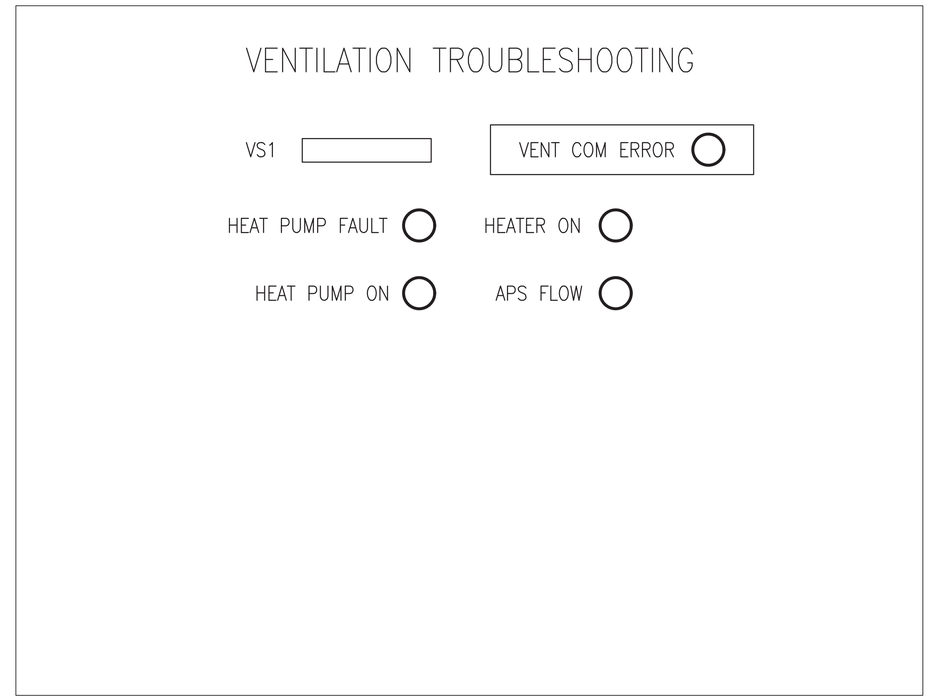

LOCAL CONTROL PANEL VENTILATION TROUBLE SHOOTING SCREEN (B3)

SCALE: NTS

NOTES:
THIS PAGE WILL BE AVAILABLE FOR ENGINEERS TROUBLESHOOTING ISSUES AND PROBLEMS. VENTILATION FAN DRIVE FAULTS WILL SHOW AT THIS LOCATION AS WELL. THIS ALARM SHOULD NOT CAUSE ANY OTHER FUNCTIONALITY OF THE LCP TO BE LOST.

THIS SCREEN SHALL BE ACCESSED FROM BUTTON AT TOP OF MAIN PAGE.

APS FLOW SHALL INDICATE FLOW THROUGH APS LINE. IF FLOW FAILS IT SHALL CREATE A WARNING THAT POPS UP OVER MAIN SCREEN. THE WARNING SHALL HAVE THE ABILITY TO BE ACKNOWLEDGED AND DISMISSED.

SYM	DESCRIPTION	DATE	APPR
0	ISSUED FOR CONSTRUCTION	10/28/2016	CBC

NAVFAC

STATE OF MAINE
JASON M. BEAULIEU
No. 13441
LICENSED PROFESSIONAL ENGINEER
10/28/16
SEAL

Colby Company engineering
A/E INFO

APPROVED
FOR COMMANDER NAVFAC

ACTIVITY
TIM FISHER
C. 2370.6 BRANCH HEAD

SATISFACTORY TO DATE 10/28/2016

DES JMB DRW JMB CHK MRL

PMDM PETER STOCKLESS
BRANCH MANAGER IAN BODWELL
FEA/PM&E AMIN BAHROUR
FIRE PROTECTION PATRICK BAKAJ

DEPARTMENT OF THE NAVY
NAVAL FACILITIES ENGINEERING COMMAND
PUBLIC WORKS DEPARTMENT - MAINE

NAVAL FACILITIES ENGINEERING COMMAND ~ MID-ATLANTIC
NAVAL SHIPYARD - PORTSMOUTH, NH

PORTSMOUTH NAVAL SHIPYARD
KITTERY, ME

DRY DOCK #1 DEFUELING COMPLEX
M-140 COMPLEX

CONTROL PANEL TROUBLE SHOOTING SCREEN LAYOUTS

EPROJECT NO.: 1363311

CONSTR. CONTR. NO.
N40085-17-C-5002

NAVFAC DRAWING NO.
12734966

SHEET 183 OF 188

IC-203 DD1-16-1047

DRAWFORM REVISION: 10 OCTOBER 2014

10/28/2016 6:53:35 AM X:\297 PORTSMOUTH NAVAL SHIPYARD\297.005.001 - DD#1 DEFUELING COMPLEX DESIGN\DRAWINGS\M140\SHEETS\IC-203.DWG

NOTES

1. REFER TO Q-104 FOR CRANE INFORMATION.
2. CRANE ENVELOPE SHOWN REPRESENTS THE SPACE THE BRIDGE CRANE OCCUPIES WHEN IN ITS PARKED POSITION. THE BRIDGE CRANE IS CAPABLE OF TRAVERSING THE ENCLOSURE.
3. CRANE HOOK LIMITS ARE APPROXIMATIONS BASED ON INTERFERENCES FROM LEVEL 2 ABOVE.

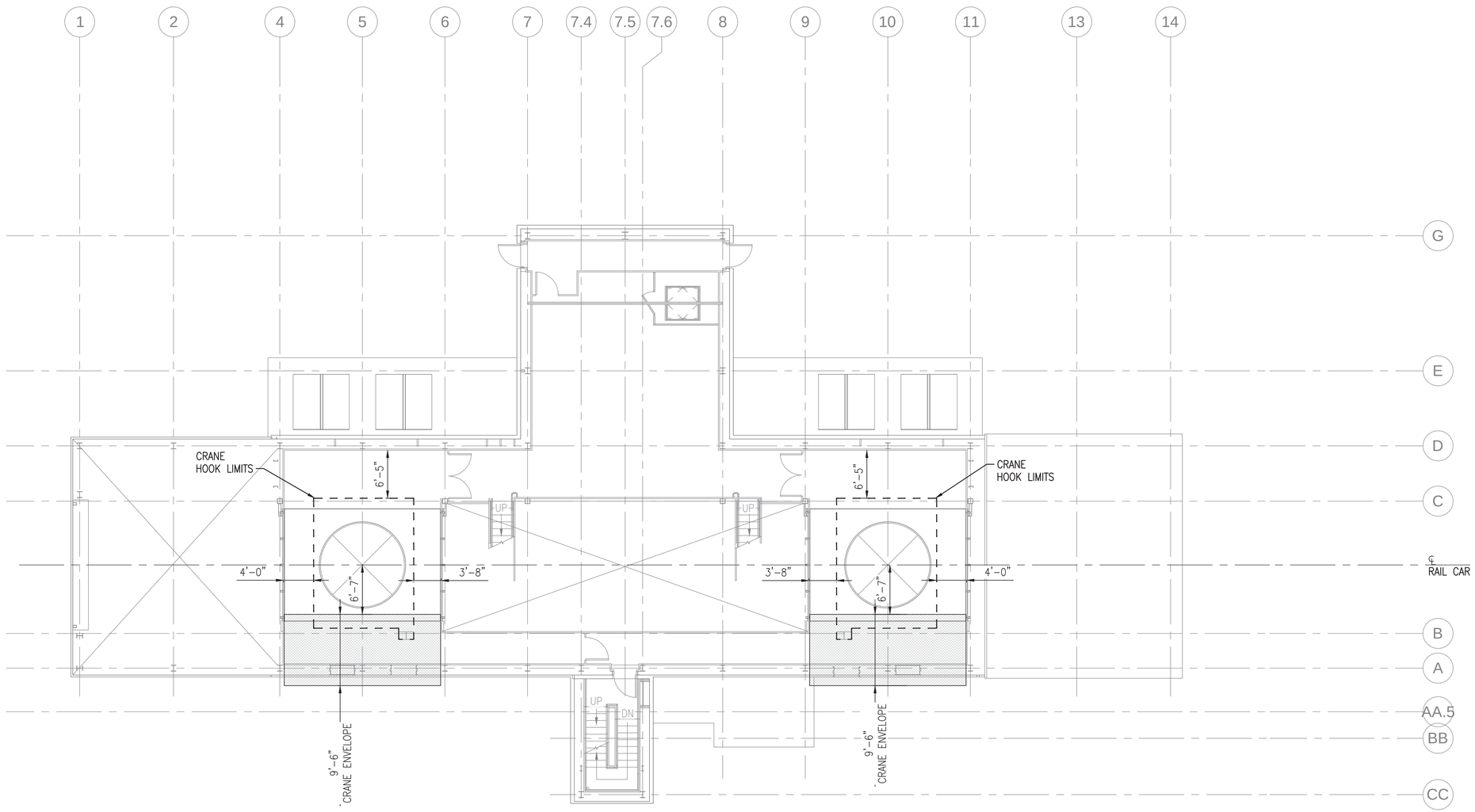

CRANE SUMMARY - LEVEL 1

SCALE: 1/8" = 1'-0"

PLAN NORTH

0 4' 8' 16'
Scale: 1/8" = 1'-0"

SYM	DESCRIPTION	DATE	APPR
0	ISSUED FOR CONSTRUCTION	10/28/2016	CBC

NAVFAC

STATE OF MAINE
BENJAMIN C. TOWNSEND
No. 13287
LICENSED
PROFESSIONAL ENGINEER
10/28/16
SEAL

Colby Company engineering
A/E INFO

APPROVED
DAVID W. TRUMFELD
FOR COMMANDER NAVFAC

ACTIVITY
TIM FISHER
C. 2370.6 BRANCH HEAD

SATISFACTORY TO DATE 10/28/2016
DES BCT DRW ERB CHK BCT
PM/DM PETER STOCKLESS
BRANCH MANAGER IAN BODWELL
FEAD/PM&E AMIN BAHROUR
FIRE PROTECTION PATRICK BAKAJ

DEPARTMENT OF THE NAVY
NAVAL FACILITIES ENGINEERING COMMAND
PUBLIC WORKS DEPARTMENT - MAINE

NAVAL FACILITIES ENGINEERING COMMAND – MID-ATLANTIC
NAVAL SHIPYARD - PORTSMOUTH, NH

PORTSMOUTH NAVAL SHIPYARD
KITTERY, ME

DRY DOCK #1 DEFUELING COMPLEX
M-140 COMPLEX

CRANE SUMMARY – LEVEL 1

EPROJECT NO.: 1363311
CONSTR. CONTR. NO. N40085-17-C-5002
NAVFAC DRAWING NO. 12734967
SHEET 184 OF 188
Q-101 DD1-16-1048

DRAWFORM REVISION: 10 OCTOBER 2014

10/28/2016 6:53:39 AM X:\297 PORTSMOUTH NAVAL SHIPYARD\297.005.001 - DD#1 DEFUELING COMPLEX DESIGN\DRAWINGS\M140\SHEETS\Q-101.DWG

NOTES

1. REFER TO Q–104 FOR CRANE INFORMATION.
2. CRANE ENVELOPE SHOWN REPRESENTS THE SPACE THE BRIDGE CRANE OCCUPIES WHEN IN ITS PARKED POSITION. THE BRIDGE CRANE IS CAPABLE OF TRAVERSING THE ENCLOSURE.
3. CRANE HOOK LIMITS ARE APPROXIMATIONS BASED ON INTERFERENCES FROM LEVEL 3 ABOVE.

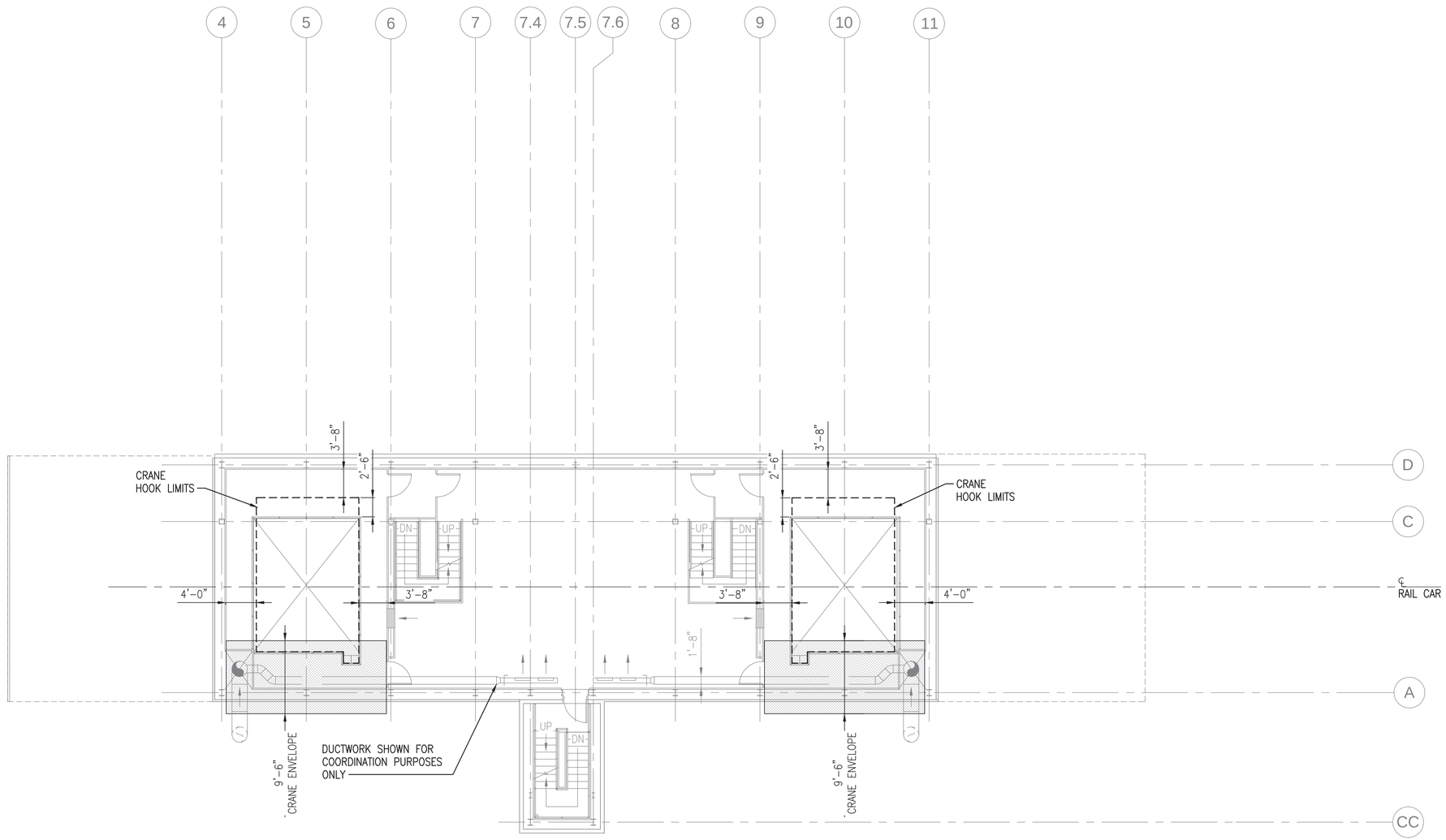

CRANE SUMMARY - LEVEL 2

SCALE: 1/8" = 1'–0"

PLAN NORTH

0 4' 8' 16'
Scale: 1/8" = 1'–0"

SYM	DESCRIPTION	DATE	APPR
0	ISSUED FOR CONSTRUCTION	10/28/2016	CBC

NAVFAC

STATE OF MAINE
BENJAMIN C. TOWNSEND
No. 13287
LICENSED
PROFESSIONAL ENGINEER
10/28/16
SEAL

Colby Company engineering
A/E INFO

APPROVED
DATE 10/28/2016
FOR COMMANDER NAVFAC

ACTIVITY
TIM FISHER
C. 2370.6 BRANCH HEAD

SATISFACTORY TO DATE 10/28/2016

DES	BCT	DRW	ERB	CHK	BCT

PM/DM PETER STOCKLESS
BRANCH MANAGER IAN BODWELL
FEA/DPM&E AMIN BAHROUR
FIRE PROTECTION PATRICK BAKAJ

DEPARTMENT OF THE NAVY
NAVAL FACILITIES ENGINEERING COMMAND
PUBLIC WORKS DEPARTMENT - MAINE

NAVAL FACILITIES ENGINEERING COMMAND – MID-ATLANTIC
NAVAL SHIPYARD - PORTSMOUTH NH

PORTSMOUTH NAVAL SHIPYARD
KITTERY, ME

DRY DOCK #1 DEFUELING COMPLEX
M-140 COMPLEX

CRANE SUMMARY – LEVEL 2

EPROJECT NO.: 1363311
CONSTR. CONTR. NO. N40085-17-C-5002
NAVFAC DRAWING NO. 12734968
SHEET 185 OF 188

Q-102 | DD1-16-1049

DRAWFORM REVISION: 10 OCTOBER 2014

10/28/2016 6:53:43 AM X:\297 PORTSMOUTH NAVAL SHIPYARD\297.005.001 - DD#1 DEFUELING COMPLEX DESIGN\DRAWINGS\M140\SHEETS\Q-102.DWG

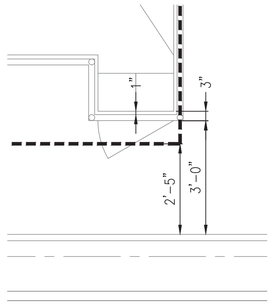

PART PLAN AT TOOL COLUMN (D1)

SCALE: 1/2"=1'-0" Q-103

NOTES

1. REFER TO Q-104 FOR CRANE INFORMATION.
2. CRANE ENVELOPE SHOWN REPRESENTS THE SPACE THE BRIDGE CRANE OCCUPIES WHEN IN ITS PARKED POSITION. THE BRIDGE CRANE IS CAPABLE OF TRAVERSING THE ENCLOSURE.
3. CRANE HOOK LIMITS ARE APPROXIMATIONS BASED ON LIMITATIONS OF THE BRIDGE CRANE.

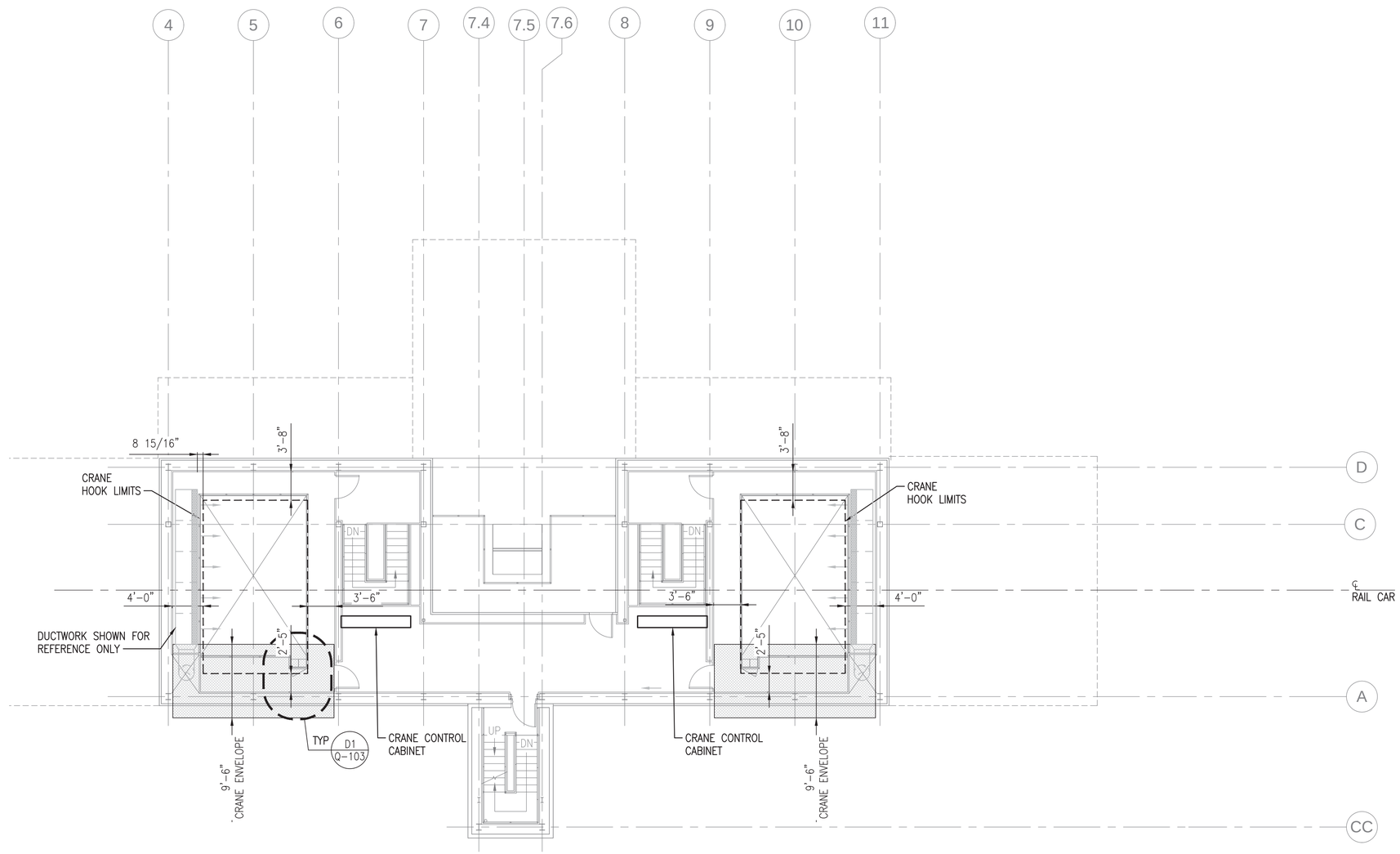

CRANE SUMMARY - LEVEL 3

SCALE: 1/8" = 1'-0"

PLAN NORTH

0 4' 8' 16'
Scale: 1/8" = 1'-0"

SYM	DESCRIPTION	DATE	APPR
0	ISSUED FOR CONSTRUCTION	10/28/2016	CBC

NAVFAC

STATE OF MAINE
BENJAMIN C. TOWNSEND
No. 13287
LICENSED PROFESSIONAL ENGINEER
10/28/16
SEAL

Colby Company engineering
A/E INFO

APPROVED
FOR COMMANDER NAVFAC

ACTIVITY
TIM FISHER
C. 2370.6 BRANCH HEAD

SATISFACTORY TO DATE 10/28/2016

DES	BCT	DRW	ERB	CHK	BCT

PMDM	PETER STOCKLESS
BRANCH MANAGER	IAN BODWELL
READPM&E	AMIN BAHROUR
FIRE PROTECTION	PATRICK BAKAJ

DEPARTMENT OF THE NAVY
NAVAL FACILITIES ENGINEERING COMMAND
PUBLIC WORKS DEPARTMENT - MAINE

NAVAL FACILITIES ENGINEERING COMMAND ~ MID-ATLANTIC
NAVAL SHIPYARD - PORTSMOUTH, NH

PORTSMOUTH NAVAL SHIPYARD
KITTERY, ME

DRY DOCK #1 DEFUELING COMPLEX
M-140 COMPLEX

CRANE SUMMARY - LEVEL 3

EPROJECT NO.: 1363311

CONSTR. CONTR. NO.
N40085-17-C-5002

NAVFAC DRAWING NO.
12734969

SHEET 186 OF 188

Q-103 DD1-16-1050

DRAWFORM REVISION: 10 OCTOBER 2014

10/28/2016 6:53:48 AM X:\297 PORTSMOUTH NAVAL SHIPYARD\297.005.001 - DD#1 DEFUELING COMPLEX DESIGN\DRAWINGS\M140\SHEETS\Q-103.DWG

BRIDGE CRANE NOTES

1. THE ENCLOSURE WILL HOUSE A 5 TON BRIDGE CRANE.
2. THE BRIDGE CRANE ENVELOPE AND HOOK LIMITS ARE SHOWN FOR GENERAL CRANE REQUIREMENTS FOR COORDINATION WITH THE ENCLOSURE DESIGN AND CONSTRUCTION.
3. A CATWALK SYSTEM IS LOCATED ON THE CRANE TO ALLOW SERVICING/SURVEY OF EQUIPMENT AND RAILS.
4. THE CRANE CONTROLS CABINET IS LOCATED AT LEVEL 3.
5. FESTOON LOCATION: TBD
6. THE FOLLOWING ARE THE OVERALL BRIDGE CRANE REQUIREMENTS:
   - UPPER HOOK LIMIT: 65'–0" FROM GROUND LEVEL (TOP OF RAILCAR RAILS)
   - LOWER HOOK LIMIT: 26'–10–1/4" MIN. FROM GROUND LEVEL (TOP OF RAILCAR RAILS)
   - CRANE ENVELOPE: 9'–6"
   - HOOK HEIGHT BASED ON 1' BELOW CRANE RAIL
   - HOOK APPROACH: AS SHOWN ON DRAWINGS
   - SPAN (CENTER RAIL TO RAIL): 19'–0"

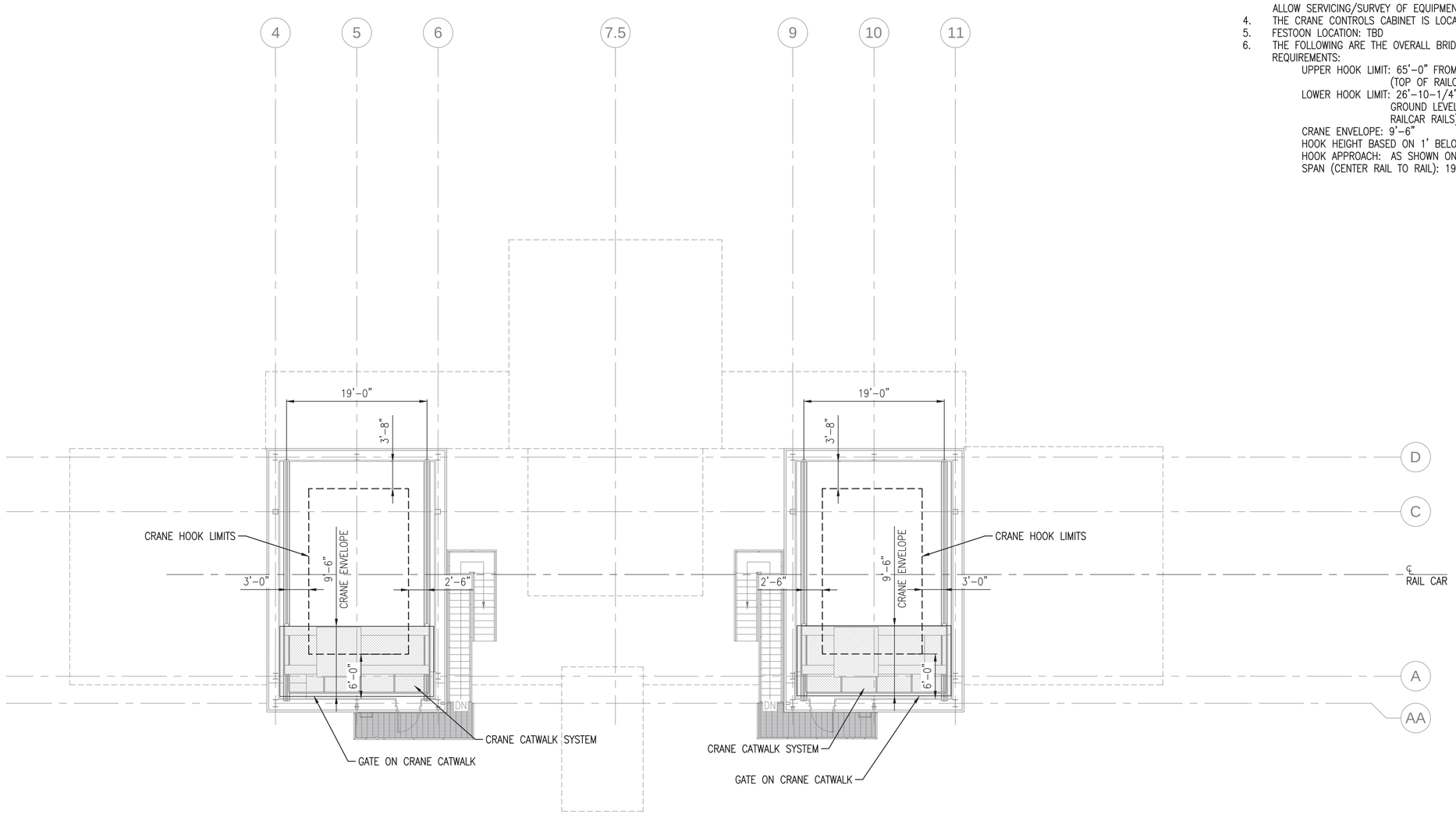

CRANE SUMMARY - CRANE LEVEL

SCALE: 1/8" = 1'–0"

PLAN NORTH

0 4' 8' 16'
Scale: 1/8" = 1'–0"

SYM	DESCRIPTION	DATE	APPR
0	ISSUED FOR CONSTRUCTION	10/28/2016	CBC

NAVFAC

STATE OF MAINE
BENJAMIN C. TOWNSEND
No.13287
LICENSED
PROFESSIONAL ENGINEER
10/28/16
SEAL

Colby Company engineering
A/E INFO

APPROVED
FOR COMMANDER NAVFAC
ACTIVITY
TIM FISHER
C. 2370.6 BRANCH HEAD
SATISFACTORY TO DATE 10/28/2016

DES	BCT	DRW	ERB	CHK	BCT

PM/DM PETER STOCKLESS
BRANCH MANAGER IAN BODWELL
FEA/PM&E AMIN BAHROUR
FIRE PROTECTION PATRICK BAKAJ

DEPARTMENT OF THE NAVY
NAVAL FACILITIES ENGINEERING COMMAND
PUBLIC WORKS DEPARTMENT - MAINE
NAVAL FACILITIES ENGINEERING COMMAND – MID-ATLANTIC
NAVAL SHIPYARD - PORTSMOUTH NH
PORTSMOUTH NAVAL SHIPYARD
KITTERY, ME
DRY DOCK #1 DEFUELING COMPLEX
M-140 COMPLEX
CRANE SUMMARY – CRANE LEVEL

EPROJECT NO.: 1363311
CONSTR. CONTR. NO. N40085-17-C-5002
NAVFAC DRAWING NO. 12734970
SHEET 187 OF 188
Q-104 DD1-16-1051

DRAWFORM REVISION: 10 OCTOBER 2014

10/28/2016 6:53:52 AM X:\297 PORTSMOUTH NAVAL SHIPYARD\297.005.001 - DD#1 DEFUELING COMPLEX DESIGN\DRAWINGS\M140\SHEETS\Q-104.DWG

KEYED NOTES:

1. DISTANCE FROM RAILCAR RAILS TO UPPER HOOK LIMIT (MAX. HOOK HEIGHT).
2. DISTANCE FROM RAILCAR RAILS TO LOWER HOOK LIMIT (MIN. HOOK HEIGHT).
3. DISTANCE FROM UPPER HOOK LIMIT TO CRANE RAILS.
4. DISTANCE FROM CRANE RAILS TO UNDERSIDE OF MOVABLE ROOF SECTION.
5. DISTANCE FROM TOP OF BRIDGE CRANE TROLLEY TO NEAREST OVERHEAD OBSTRUCTION.
6. DISTANCE FROM CRANE WALKWAY TO CRANE RAILS.

NOTES

1. REFER TO Q-104 FOR BRIDGE CRANE INFORMATION.

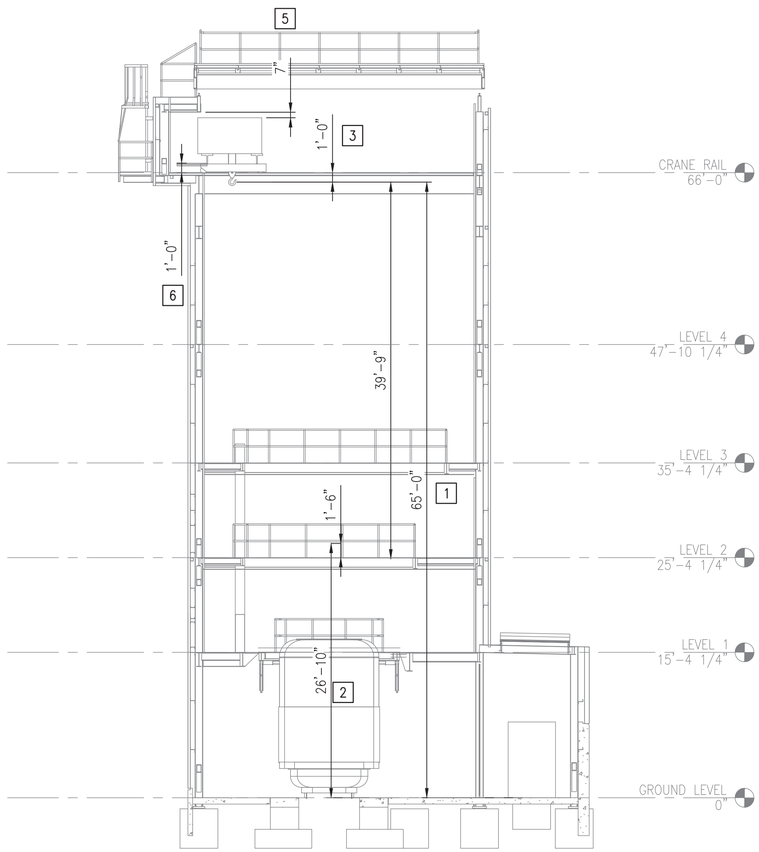

BUILDING SECTION WITH BRIDGE CRANE (A1)

SCALE: 1/8" = 1'-0"

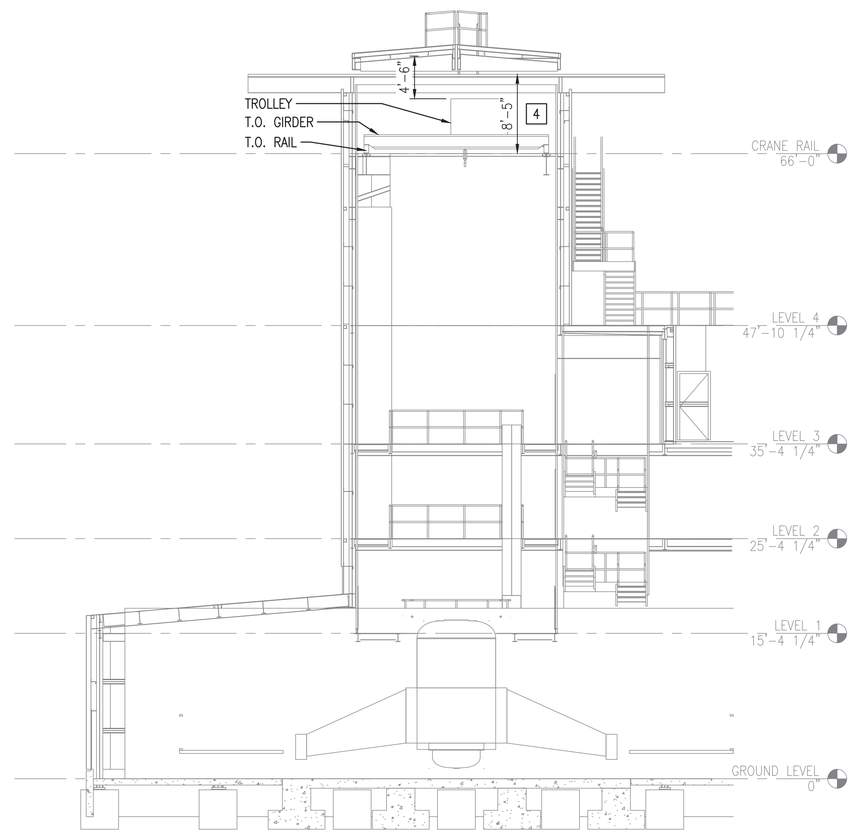

BUILDING SECTION WITH BRIDGE CRANE (A3)

SCALE: 1/8" = 1'-0"

0 4' 8' 16'
Scale: 1/8" = 1'-0"

SYM	DESCRIPTION	DATE	APPR
0	ISSUED FOR CONSTRUCTION	10/28/2016	CBC

NAVFAC

STATE OF MAINE
BENJAMIN C. TOWNSEND
No.13287
LICENSED PROFESSIONAL ENGINEER
10/28/16
SEAL

Colby Company engineering
A/E INFO

APPROVED
FOR COMMANDER NAVFAC

ACTIVITY: TIM FISHER
C. 2370.6 BRANCH HEAD

SATISFACTORY TO DATE 10/28/2016

DES	BCT	DRW	ERB	CHK	BCT

PM/DM: PETER STOCKLESS
BRANCH MANAGER: IAN BODWELL
FEA/PM&E: AMIN BAHROUR
FIRE PROTECTION: PATRICK BAKAJ

DEPARTMENT OF THE NAVY
NAVAL FACILITIES ENGINEERING COMMAND
PUBLIC WORKS DEPARTMENT - MAINE

NAVAL FACILITIES ENGINEERING COMMAND ~ MID-ATLANTIC
NAVAL SHIPYARD - PORTSMOUTH, NH

PORTSMOUTH NAVAL SHIPYARD
DRY DOCK #1 DEFUELING COMPLEX
KITTERY, ME
M-140 COMPLEX

BUILDING SECTION WITH BRIDGE CRANE

EPROJECT NO.: 1363311
CONSTR. CONTR. NO.: N40085-17-C-5002
NAVFAC DRAWING NO.: 12734971
SHEET 188 OF 188

Q-301 | DD1-16-1052

DRAWFORM REVISION: 10 OCTOBER 2014

10/28/2016 6:53:57 AM X:\297 PORTSMOUTH NAVAL SHIPYARD\2297.005.001 - DD#1 DEFUELING COMPLEX DESIGN\DRAWINGS\M140\SHEETS\Q-301.DWG