PORTSMOUTH NAVAL SHIPYARD
KITTERY, ME

DRYDOCK #1 DEFUELING COMPLEX
VOLUME 5: ACE-3
CONTRACT NO. N40085-17-C-5002

LIST OF VOLUMES	
VOLUME:	TITLE:
1	SITE & FOUNDATIONS
2	M-140 COMPLEX
3	DRE-7
4	RAE-4 & RAE-SP-6
5	ACE-3
6	PASSAGEWAYS

DRAWING INDEX

DRAWING	TITLE	SHEET NUMBER
G-001	TITLE SHEET	1 OF 43
GA-100	GENERAL ARRANGEMENT – GROUND LEVEL PLAN	2 OF 43
GA-101	GENERAL ARRANGEMENT – ROOF PLAN	3 OF 43
GA-901	GENERAL ARRANGEMENT – RENDERINGS	4 OF 43
LS-001	LIFE SAFETY ABBREVIATIONS AND GENERAL NOTES	5 OF 43
LS-100	GROUND LEVEL LIFE SAFETY PLAN	6 OF 43
S-001	STRUCTURAL GENERAL NOTES SHEET	7 OF 43
S-100	COLUMN GRID PLAN	8 OF 43
S-101	FRAMING PLAN AT ROOF	9 OF 43
S-201	FRAMING ELEVATIONS	10 OF 43
S-202	FRAMING ELEVATIONS AT VESTIBULE	11 OF 43
S-501	TYPICAL FRAMING DETAILS	12 OF 43
S-502	LADDERS AND WALL DETAILS	13 OF 43
A-001	ARCHITECTURAL LEGEND, ABBREVIATIONS AND GENERAL NOTES	14 OF 43
A-100	GROUND LEVEL PLAN	15 OF 43
A-101	ROOF PLAN	16 OF 43
A-102	REFLECTED CEILING PLAN	17 OF 43
A-201	ACE BUILDING ELEVATIONS	18 OF 43
A-301	ACE BUILDING SECTIONS	19 OF 43
A-302	WALL SECTIONS	20 OF 43
A-401	INTERIOR ELEVATIONS	21 OF 43
A-501	ARCHITECTURAL DETAILS	22 OF 43
A-502	WALL DETAILS	23 OF 43
A-503	MOUNTING DETAILS	24 OF 43
A-601	ROOM FINISH AND DOOR SCHEDULES	25 OF 43
A-602	DOOR DETAILS	26 OF 43
FA-001	FIRE ALARM LEGEND, ABBREVIATIONS AND GENERAL NOTES	27 OF 43
FA-100	GROUND LEVEL FIRE ALARM PLAN	28 OF 43
M-001	MECHANICAL LEGEND, ABBREVIATIONS AND GENERAL NOTES	29 OF 43
M-100	GROUND LEVEL MECHANICAL PLAN	30 OF 43
M-101	ROOF MECHANICAL PLAN	31 OF 43
M-501	MECHANICAL DETAILS AND SCHEDULES	32 OF 43
E-001	ELECTRICAL LEGEND, ABBREVIATIONS AND GENERAL NOTES	33 OF 43
EP-100	GROUND LEVEL POWER AND SYSTEMS PLAN	34 OF 43
EP-101	ROOF POWER PLAN	35 OF 43
EL-100	GROUND LEVEL LIGHTING PLAN	36 OF 43
E-501	ELECTRICAL DIAGRAMS – CRITICAL LOADS	37 OF 43
E-502	ELECTRICAL COMMUNICATIONS RISER DIAGRAM	38 OF 43
E-503	ELECTRICAL SCHEMATICS	39 OF 43
E-504	ELECTRICAL DETAILS	40 OF 43
E-601	ELECTRICAL SCHEDULES	41 OF 43
IC-100	GROUND LEVEL CONTROLS PLAN	42 OF 43
IC-200	CONTROL PANEL SCREEN LAYOUTS	43 OF 43

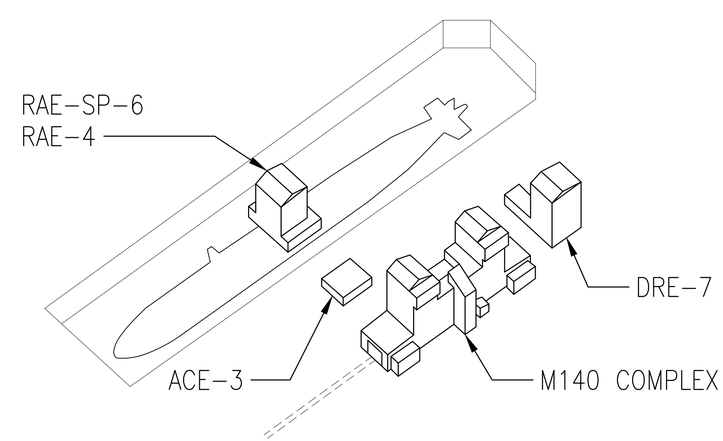

DD#1 SITE ISO DIAGRAM
SCALE: NTS

PLAN NORTH

SYM	DESCRIPTION	DATE	APPR
0	ISSUED FOR CONSTRUCTION	10/28/2016	CBC

NAVFAC

STATE OF MAINE
CALEN B. COLBY
No. 6384
LICENSED
PROFESSIONAL ENGINEER
10/28/16

Colby Company engineering

A/E INFO

APPROVED
David W. Krumfeld
FOR COMMANDER NAVFAC

ACTIVITY
TIM FISHER
C. 2370.6 BRANCH HEAD

SATISFACTORY TO DATE 10/28/2016

DES BCT DRW BVD CHK CBC

PMDM PETER STOCKLESS

BRANCH MANAGER IAN BODWELL

FEA/PM&E AMIN BAHROUR

FIRE PROTECTION PATRICK BAKAJ

DEPARTMENT OF THE NAVY
NAVAL FACILITIES ENGINEERING COMMAND
PUBLIC WORKS DEPARTMENT - MAINE

NAVAL FACILITIES ENGINEERING COMMAND ~ MID-ATLANTIC
NAVAL SHIPYARD - PORTSMOUTH, NH

PORTSMOUTH NAVAL SHIPYARD
DRY DOCK #1 DEFUELING COMPLEX
ACE-3
KITTERY, ME

TITLE SHEET

EPROJECT NO.: 1363311

CONSTR. CONTR. NO.
N40085-17-C-5002

NAVFAC DRAWING NO.
12735218

SHEET 1 OF 43

G-001 DD1-16-1299

DRAWFORM REVISION: 10 OCTOBER 2014

10/28/2016 7:25:09 AM X:\297 PORTSMOUTH NAVAL SHIPYARD\297.005.001 - DD#1 DEFUELING COMPLEX DESIGN\DRAWINGS\ACE3\SHEETS\G-001.DWG

NOTES

1. THE INTENT OF THE GENERAL ARRANGEMENT DRAWINGS IS TO SHOW GENERAL REQUIREMENTS AND USAGE OF THE ENCLOSURE. THE EQUIPMENT IS SHOWN IN THE DRAWINGS FOR COORDINATION WITH OTHER TRADES AS WELL AS OVERALL CONTRACTOR COORDINATION. THESE LOCATIONS ARE PROVIDED FOR SYSTEM/BUILDING INSTALLATION TO ENSURE NO INTERFERENCES AND CONFLICTS EXIST WITH THE FUTURE SHIPYARD EQUIPMENT.

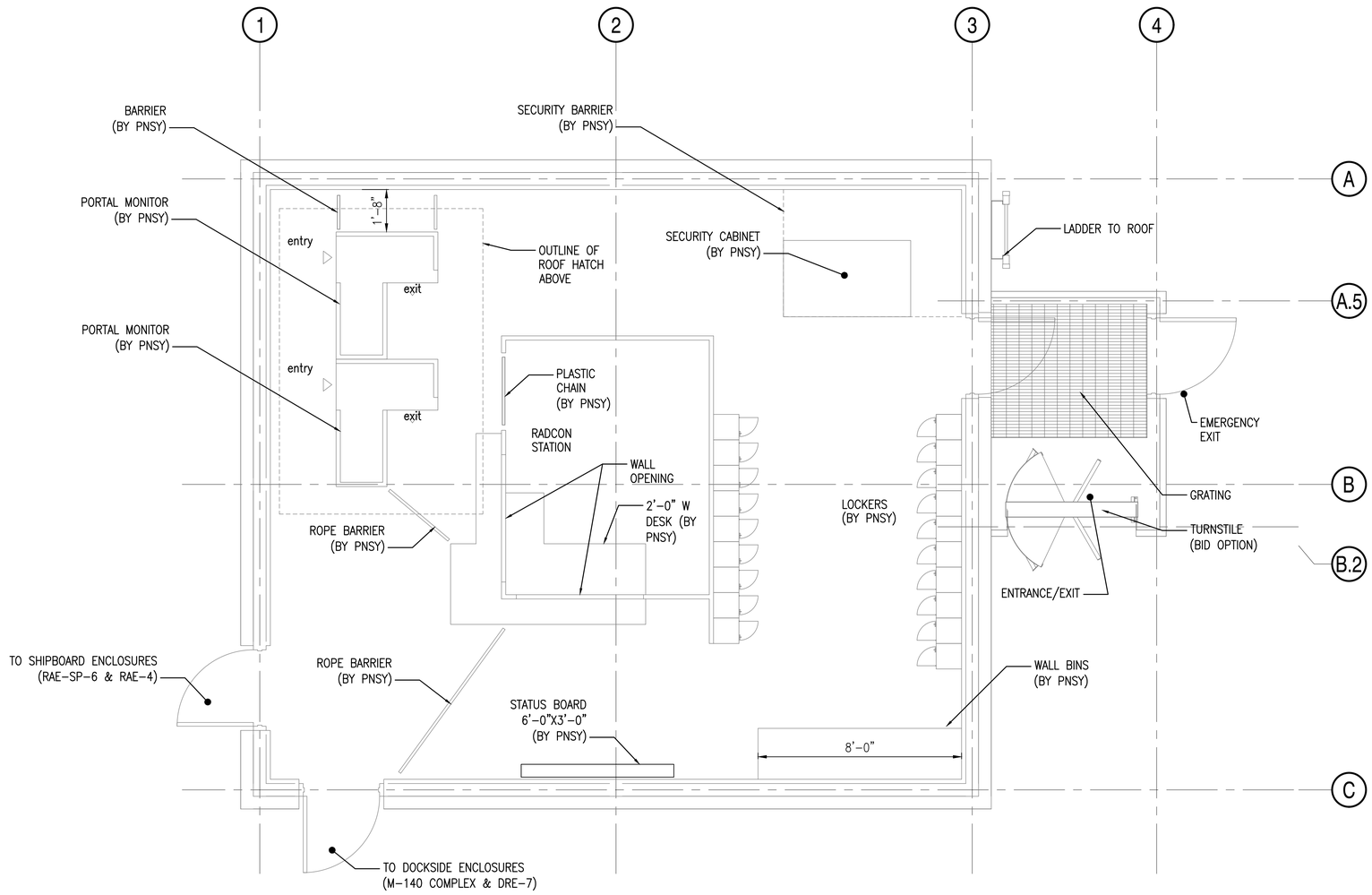

GENERAL ARRANGEMENT - GROUND LEVEL PLAN

SCALE: 3/8" = 1'-0"

PLAN NORTH

0 2' 4' 6'
Scale: 3/8" = 1'-0"

SYM	DESCRIPTION	DATE	APPR
0	ISSUED FOR CONSTRUCTION	10/28/2016	CBC

NAVFAC

STATE OF MAINE
BENJAMIN C. TOWNSEND
No.13287
LICENSED
PROFESSIONAL ENGINEER
10/28/16
SEAL

Colby Company engineering
A/E INFO

APPROVED
David W. Grunfeld
FOR COMMANDER NAVFAC

ACTIVITY: TIM FISHER, C. 2370.6 BRANCH HEAD
SATISFACTORY TO DATE: 10/28/2016
DES: BCT | DRW: ERB | CHK: BCT
PMOM: PETER STOCKLESS
BRANCH MANAGER: IAN BODWELL
FEA/DPM&E: AMIN BAHROUR
FIRE PROTECTION: PATRICK BAKAJ

DEPARTMENT OF THE NAVY
NAVAL FACILITIES ENGINEERING COMMAND
PUBLIC WORKS DEPARTMENT - MAINE
NAVAL FACILITIES ENGINEERING COMMAND ~ MID-ATLANTIC
NAVAL SHIPYARD - PORTSMOUTH, NH
PORTSMOUTH NAVAL SHIPYARD
KITTERY, ME
DRY DOCK #1 DEFUELING COMPLEX
ACE-3
GENERAL ARRANGEMENT - GROUND LEVEL PLAN

EPROJECT NO.: 1363311
CONSTR. CONTR. NO. N40085-17-C-5002
NAVFAC DRAWING NO. 12735219
SHEET 2 OF 43
GA-100 | DD1-16-1300

DRAWFORM REVISION: 10 OCTOBER 2014

10/28/2016 7:25:14 AM X:\297 PORTSMOUTH NAVAL SHIPYARD\297.005.001 - DD#1 DEFUELING COMPLEX DESIGN\DRAWINGS\ACE3\SHEETS\GA-100.DWG

NOTES

1. THE INTENT OF THE GENERAL ARRANGEMENT DRAWINGS IS TO SHOW GENERAL REQUIREMENTS AND USAGE OF THE ENCLOSURE. THE EQUIPMENT IS SHOWN IN THE DRAWINGS FOR COORDINATION WITH OTHER TRADES AS WELL AS OVERALL CONTRACTOR COORDINATION. THESE LOCATIONS ARE PROVIDED FOR SYSTEM/BUILDING INSTALLATION TO ENSURE NO INTERFERENCES AND CONFLICTS EXIST WITH THE FUTURE SHIPYARD EQUIPMENT.

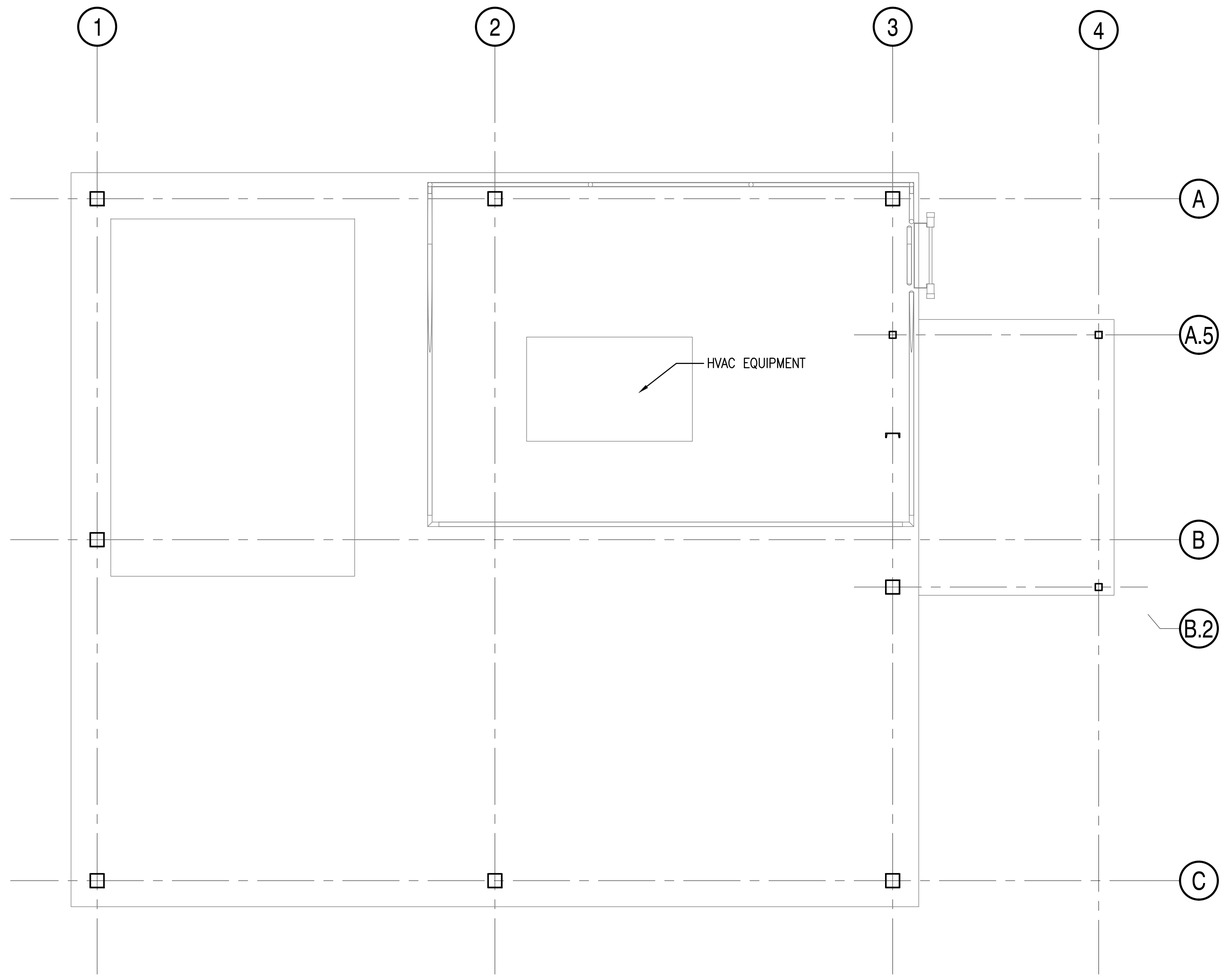

GENERAL ARRANGEMENT - ROOF PLAN

SCALE: 3/8" = 1'-0"

PLAN NORTH

0 2' 4' 6'
Scale: 3/8" = 1'-0"

SYM	DESCRIPTION	DATE	APPR
0	ISSUED FOR CONSTRUCTION	10/28/2016	CBC

NAVFAC

STATE OF MAINE
BENJAMIN C. TOWNSEND
No. 13287
LICENSED PROFESSIONAL ENGINEER
10/28/16
SEAL

Colby Company engineering
A/E INFO

APPROVED
David W. Krumfeld
FOR COMMANDER NAVFAC

ACTIVITY
TIM FISHER
C. 2370.6 BRANCH HEAD

SATISFACTORY TO DATE 10/28/2016

DES	BCT	DRW	ERB	CHK	BCT

PM/DM PETER STOCKLESS
BRANCH MANAGER IAN BODWELL
FEAD/PM&E AMIN BAHROUR
FIRE PROTECTION PATRICK BAKAJ

DEPARTMENT OF THE NAVY
NAVAL FACILITIES ENGINEERING COMMAND
PUBLIC WORKS DEPARTMENT - MAINE
NAVAL FACILITIES ENGINEERING COMMAND ~ MID-ATLANTIC
NAVAL SHIPYARD - PORTSMOUTH, NH
PORTSMOUTH NAVAL SHIPYARD
KITTERY, ME
DRY DOCK #1 DEFUELING COMPLEX
ACE-3
GENERAL ARRANGEMENT – ROOF PLAN

EPROJECT NO.: 1363311
CONSTR. CONTR. NO. N40085-17-C-5002
NAVFAC DRAWING NO. 12735220
SHEET 3 OF 43
GA-101 | DD1-16-1301

DRAWFORM REVISION: 10 OCTOBER 2014

10/28/2016 7:25:19 AM X:\297 PORTSMOUTH NAVAL SHIPYARD\297.005.001 - DD#1 DEFUELING COMPLEX DESIGN\DRAWINGS\ACE3\SHEETS\GA-101.DWG

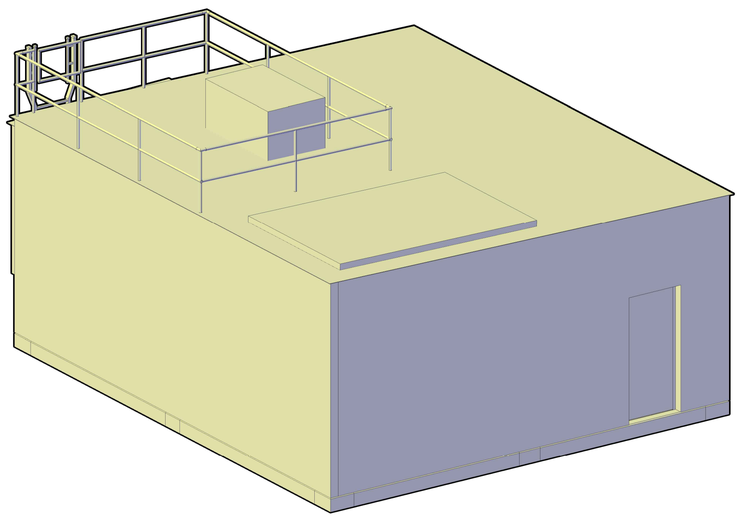

3D RENDERING
SCALE: NTS
A1

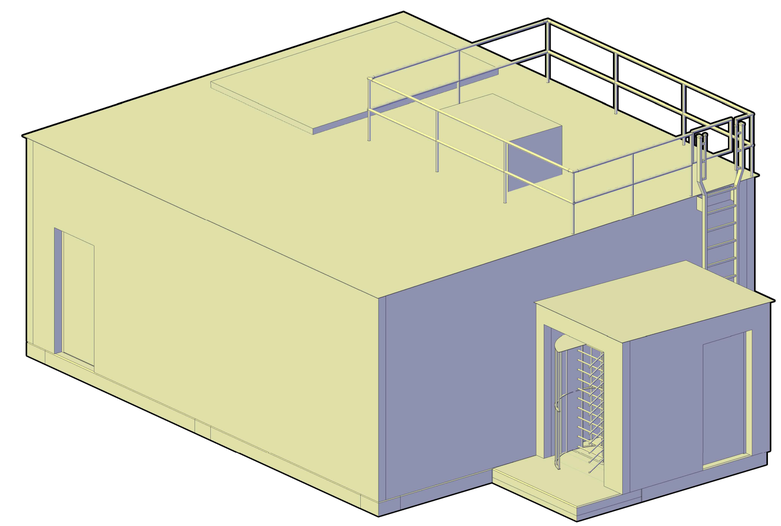

3D RENDERING
SCALE: NTS
A3

SYM	DESCRIPTION	DATE	APPR
0	ISSUED FOR CONSTRUCTION	10/28/2016	CBC

NAVFAC

STATE OF MAINE
BENJAMIN C. TOWNSEND
No. 13287
LICENSED
PROFESSIONAL ENGINEER
10/28/16
SEAL

Colby Company engineering
A/E INFO

APPROVED
David W. Krumfeld
FOR COMMANDER NAVFAC

ACTIVITY
TIM FISHER
C. 2370.6 BRANCH HEAD

SATISFACTORY TO DATE 10/28/2016
DES BCT DRW ERB CHK BCT
PMOM PETER STOCKLESS
BRANCH MANAGER IAN BODWELL
FEA/PM&E AMIN BAHROUR
FIRE PROTECTION PATRICK BAKAJ

DEPARTMENT OF THE NAVY
NAVAL FACILITIES ENGINEERING COMMAND
PUBLIC WORKS DEPARTMENT - MAINE
NAVAL FACILITIES ENGINEERING COMMAND ~ MID-ATLANTIC
NAVAL SHIPYARD - PORTSMOUTH, NH
PORTSMOUTH NAVAL SHIPYARD
KITTERY, ME
DRY DOCK #1 DEFUELING COMPLEX
ACE-3
GENERAL ARRANGEMENT – RENDERINGS

EPROJECT NO.: 1363311
CONSTR. CONTR. NO. N40085-17-C-5002
NAVFAC DRAWING NO. 12735221
SHEET 4 OF 43
GA-901 DD1-16-1302

DRAWFORM REVISION: 10 OCTOBER 2014

10/28/2016 7:25:28 AM X:\297 PORTSMOUTH NAVAL SHIPYARD\297.005.001 - DD#1 DEFUELING COMPLEX DESIGN\DRAWINGS\ACE3\SHEETS\GA-901.DWG

GENERAL NOTES

1. LS-100 APPLIES TO THIS CODE COMPLIANCE SUMMARY. REFER TO SITE PACKAGE SHEETS LS-001 AND LS-101 FOR MORE SITE-RELATED INFORMATION ON THE ACE-3.
2. THE AUTHORITY HAVING JURISDICTION (AHJ) FOR FIRE PROTECTION AND LIFE SAFETY ON THIS PROJECT WILL BE THE ASSIGNED FIRE PROTECTION ENGINEER FROM NAVFAC MIDLANT.
3. THE ACE ENCLOSURE WILL BE USED PRIMARILY FOR ACCESS TO THE RADIOLOGICAL ENCLOSURES.
4. BUILDING AND FIRE CODES WERE CONSULTED AND FOLLOWED FOR THE DESIGN OF THIS ENCLOSURE, BUT SOME REQUIREMENTS HAVE BEEN OVERRIDDEN DUE TO CONFLICT WITH NAVSEA REQUIREMENTS ASSOCIATED WITH THIS TYPE OF FACILITY, AS DICTATED BY PNSY AND THE AHJ.
5. THE AIR HANDLING SYSTEM SHALL NOT TIE INTO THE FACP BECAUSE ITS AIRFLOW IS LESS THAN 2,000 CFM AND SMOKE DETECTION OR AUTOMATIC SHUTDOWN IS NOT REQUIRED PER NFPA 90A.

PNSY DIRECTIVES

1. DD#1 DEFUELING ENCLOSURES SHALL NOT INCORPORATE SPRINKLER PROTECTION DUE TO RADIOLOGICAL CONTROL CONSIDERATIONS.
2. FIRE EXTINGUISHERS IN ENCLOSURES SHALL BE ABC DRY CHEMICAL TYPE, SUPPLIED AND INSTALLED BY PNSY, AND SHALL MEET NFPA 10 STANDARDS.
3. FIRE ALARM DEVICES SHALL TIE INTO THE ADDRESSABLE FACP IN THE ACE-3 ENCLOSURE. A REMOTE ANNUNCIATOR FOR THE COMPLEX SHALL BE PROVIDED OUTSIDE OF THE ACE-3 FOR FIRE DEPARTMENT USE.
4. THE ACE ENCLOSURE WILL BE USED PRIMARILY FOR ACCESS TO RADIOLOGICALLY CONTROLLED AREAS.

UFC 3-600-01- FIRE PROTECTION ENGINEERING FOR FACILITIES, 2013

1. THIS UFC STANDARD REFERENCES THE FOLLOWING DOCUMENTS:
   - 1.1. NFPA 1: FIRE LANE DIMENSIONS
   - 1.2. NFPA 10: FIRE EXTINGUISHERS (TO BE LOCATED, PROVIDED, AND INSTALLED BY PNSY)
   - 1.3. NFPA 72: FIRE ALARM
   - 1.4. NFPA 101: EGRESS AND LIFE SAFETY
   - 1.5. IBC: OCCUPANCY CLASSIFICATION, BUILDING CONSTRUCTION, ALLOWABLE AREAS AND HEIGHTS
2. TABLE C-1, HYDRANT FLOW RATE REQUIREMENTS: 1,500 GPM AT 20 PSI.
   - 2.1. UP TO 1,250 GPM CAN COME FROM A SINGLE HYDRANT PER UFC.
   - 2.2. THE DESIGN TEAM WAS NOT ABLE TO PERFORM A HYDRANT FLOW TEST WITHIN THE DESIGN PERIOD DUE TO ACTIVE ON-GOING OPERATIONS. A FLOW TEST WILL BE CONDUCTED BY THE TEAM PRIOR TO PROJECT CONSTRUCTION AND RESULTS WILL BE SUBMITTED IN AN ADDENDUM.
   - 2.3. BASED ON DATA SUPPLIED BY PNSY, HYDRANT #37 HAS A FLOW RATE OVER 1,000 GPM AT A RESIDUAL PRESSURE OF APPROXIMATELY 60 PSI. A NEW HYDRANT IS PROPOSED ADJACENT TO THE ACE-3 ENCLOSURE. IT IS ANTICIPATED THAT THE SYSTEM WILL BE CAPABLE OF PROVIDING THE DESIGN HYDRANT FLOW RATE AND THIS WILL BE ADDRESSED IN A SEPARATE ADDENDUM.
   - 2.4. HYDRANT #37 IS WITHIN 300 FT HOSE LAY DISTANCE OF THE ACE. A PROPOSED NEW HYDRANT WILL BE WITHIN AN 80 FT HOSE LAY DISTANCE OF THE ACE. REFER TO THE SITE PACKAGE LS-101.

NFPA 1 - FIRE CODE, 2015

1. 8.2.3.2.1: FIRE DEPARTMENT ACCESS ROAD IS WITHIN 50 FEET OF AT LEAST ONE EXTERIOR WALL.
2. 8.2.3.2.2: FIRE DEPARTMENT ACCESS ROAD IS WITHIN 150 FEET OF ANY EXTERIOR WALL.
3. 18.2.3.4: FIRE DEPARTMENT ACCESS ROAD HAS AN UNOBSTRUCTED WIDTH OF AT LEAST 20 FEET AND A VERTICAL CLEARANCE OF AT LEAST 13.5 FEET.

INTERNATIONAL BUILDING CODE, 2015

1. OCCUPANCY CLASSIFICATION: BUSINESS, GROUP B.
2. BUILDING CONSTRUCTION: TYPE IIB, NON-COMBUSTIBLE, UNPROTECTED
3. FIRE WALLS AND BARRIERS:
   SECTION 3104.5.1.1: PASSAGEWAYS SHALL BE SEPARATED FROM THE INTERIOR OF THE ACE-3 BY 2-HR FIRE BARRIERS. THE BARRIERS SHALL EXTEND 10 FEET (OR TO THE EDGE OF THE WALL, IF SHORTER THAN 10 FEET) IN EVERY DIRECTION SURROUNDING THE PERIMETER OF THE CONNECTION. REFER TO SITE PACKAGE SHEET LS-101.
4. ALLOWABLE NUMBER OF STORIES: THREE
   ACTUAL NUMBER OF STORIES: ONE
5. NUMBER OF FLOORS BELOW GRADE: NONE
6. TABLE 503, ALLOWABLE AREA: 23,000 SQUARE FEET
   ACTUAL ENCLOSURE AREA: 675 SQUARE FEET
7. TABLE 503, ALLOWABLE HEIGHT: 55 FEET
   ACTUAL ENCLOSURE HEIGHT: APPROX 12 FEET TO BOTTOM OF ROOF

NFPA 101 - LIFE SAFETY CODE, 2015

1. OCCUPANCY CLASSIFICATION: BUSINESS (CHAPTER 38)
2. NUMBER OF OCCUPANTS: 25
3. 38.2.4.3: NUMBER OF EXITS REQUIRED: ONE
   NUMBER OF EXITS PROVIDED: ONE
   THERE ARE TWO PASSAGEWAY ACCESS DOORS IN THE ACE, BUT THERE ARE CIRCUMSTANCES IN WHICH THOSE DOORS COULD BE LOCKED SO THEY ARE NOT CONSIDERED EMERGENCY EXIT DOORS
4. TABLE 38.2.6.2, MAXIMUM TRAVEL DISTANCE TO EXIT: 200 FT
   ACTUAL LENGTH OF TRAVEL: 70 FT
5. MAXIMUM COMMON PATH OF TRAVEL: 100 FT
   ACTUAL COMMON PATH OF TRAVEL: 16 FT
6. DEAD END CORRIDORS ARE NOT PRESENT.

ABBREVIATIONS

AFF	ABOVE FINISHED FLOOR
AFG	ABOVE FINISHED GRADE
AHJ	AUTHORITY HAVING JURISDICTION
BFG	BELOW FINISHED GRADE
BLDG	BUILDING
CLG	CEILING
CO2	CARBON DIOXIDE
DB	DIRECT BURIED
DISC	DISCONNECT
DN	DOWN
EQP	EQUIPMENT
EXIST	EXISTING
FAA	FIRE ALARM ANNUNCIATOR
FACP	FIRE ALARM CONTROL PANEL
FBO	FURNISHED BY OTHERS
FFE	FINAL FOUNDATION ELEVATION
FLR	FLOOR
GEN	GENERATOR
GND	GROUND
IBC	INTERNATIONAL BUILDING CODE
MAX	MAXIMUM
MFR	MANUFACTURER
NC	NORMALLY CLOSED
NEC	NATIONAL ELECTRIC CODE
NEG	NEGATIVE
NFPA	NATIONAL FIRE PROTECTION ASSOCIATION
NIC	NOT IN CONTRACT
NTS	NOT TO SCALE
PNSY	PORTSMOUTH NAVAL SHIPYARD
RFP	REQUEST FOR PROPOSAL
RM	ROOM
UFC	UNIFIED FACILITIES CRITERIA

SYM	DESCRIPTION	DATE	APPR
0	ISSUED FOR CONSTRUCTION	10/28/2016	CBC

NAVFAC

STATE OF MAINE
EMILY PINYARD
No. 12126
LICENSED
PROFESSIONAL ENGINEER
10/28/16
SEAL

Colby Company engineering
A/E INFO

APPROVED
DATE
FOR COMMANDER NAVFAC
ACTIVITY
TIM FISHER
C. 2370.6 BRANCH HEAD
SATISFACTORY TO DATE 10/28/2016
DES ERP DRW CSS CHK WEP
PMDM PETER STOCKLESS
BRANCH MANAGER IAN BODWELL
FEA/DPM&E AMIN BAHROUR
FIRE PROTECTION PATRICK BAKAJ

DEPARTMENT OF THE NAVY
NAVAL FACILITIES ENGINEERING COMMAND
PUBLIC WORKS DEPARTMENT, MAINE
NAVAL FACILITIES ENGINEERING COMMAND ~ MID-ATLANTIC
NAVAL SHIPYARD, PORTSMOUTH, NH
PORTSMOUTH NAVAL SHIPYARD
KITTERY, ME
DRY DOCK #1 DEFUELING COMPLEX
ACE-3
LIFE SAFETY ABBREVIATIONS AND GENERAL NOTES

EPROJECT NO.: 1363311
CONSTR. CONTR. NO. N40085-17-C-5002
NAVFAC DRAWING NO. 12735222
SHEET 5 OF 43
LS-001 DD1-16-1303

DRAWFORM REVISION: 10 OCTOBER 2014

10/28/2016 7:25:32 AM X:\297 PORTSMOUTH NAVAL SHIPYARD\297.005.001 - DD#1 DEFUELING COMPLEX DESIGN\DRAWINGS\ACE3\SHEETS\LS-001.DWG

NOTES

1. SEE SHEET LS-001 FOR ABBREVIATIONS AND GENERAL NOTES.
2. SEE SHEET LS-101 IN THE SITE PACKAGE FOR A SITE-LEVEL LAYOUT OF THE ACE-3 AND PASSAGEWAYS.

KEYED NOTES

1. 2-HR FIRE BARRIER SEPARATING ACE-3 FROM ADJACENT PASSAGEWAYS AND ENCLOSURES. SEE SITE PACKAGE SHEET LS-101 FOR PASSAGEWAY LAYOUT.
2. ROPE BARRIER IS NOT LOCKED IN PLACE AND CAN BE MOVED BY OCCUPANTS IN AN EMERGENCY EVENT.

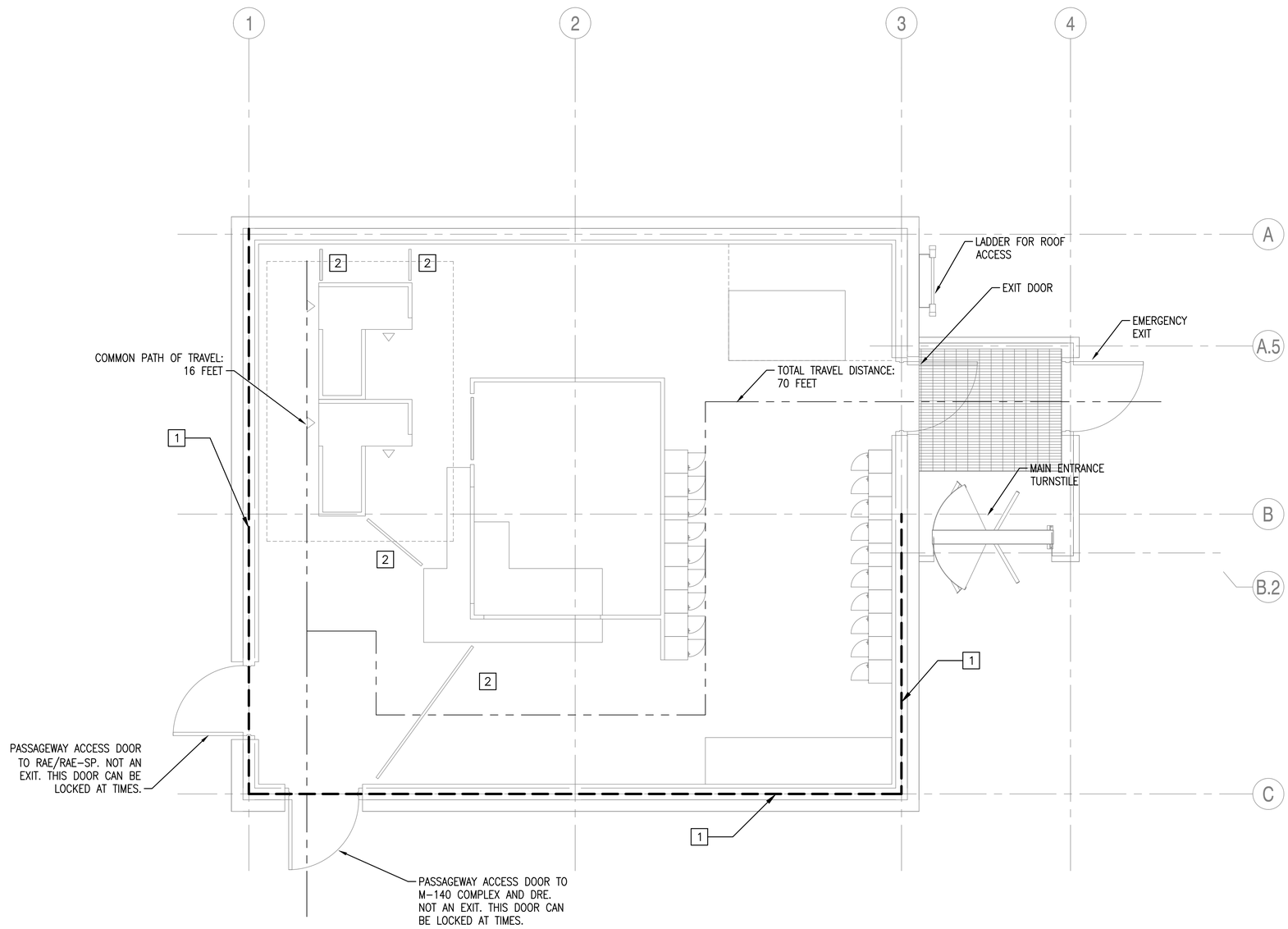

GROUND LEVEL LIFE SAFETY PLAN

SCALE: 3/8" = 1'-0"

Scale: 3/8" = 1'-0"

SYM	DESCRIPTION	DATE	APPR
0	ISSUED FOR CONSTRUCTION	10/28/2016	CBC

STATE OF MAINE — EMILY PINYARD No. 12126 — LICENSED PROFESSIONAL ENGINEER — 10/28/16 — SEAL

Colby Company engineering — A/E INFO

APPROVED: David W. Grunfeld — FOR COMMANDER NAVFAC

ACTIVITY: TIM FISHER, C. 2370.6 BRANCH HEAD

SATISFACTORY TO DATE 10/28/2016

DES	ERP	DRW	CSS	CHK	WEP

PM/DM	PETER STOCKLESS
BRANCH MANAGER	IAN BODWELL
FEAD/PM&E	AMIN BAHROUR
FIRE PROTECTION	PATRICK BAKAJ

DEPARTMENT OF THE NAVY
NAVAL FACILITIES ENGINEERING COMMAND
PUBLIC WORKS DEPARTMENT - MAINE

NAVAL FACILITIES ENGINEERING COMMAND ~ MID-ATLANTIC
NAVAL SHIPYARD - PORTSMOUTH, NH

PORTSMOUTH NAVAL SHIPYARD
KITTERY, ME

DRY DOCK #1 DEFUELING COMPLEX
ACE-3

GROUND LEVEL LIFE SAFETY PLAN

EPROJECT NO.: 1363311

CONSTR. CONTR. NO.: N40085-17-C-5002

NAVFAC DRAWING NO.: 12735223

SHEET 6 OF 43

LS-100 | DD1-16-1304

DRAWFORM REVISION: 10 OCTOBER 2014

10/28/2016 7:25:36 AM X:\297 PORTSMOUTH NAVAL SHIPYARD\297.005.001 - DD#1 DEFUELING COMPLEX DESIGN\DRAWINGS\ACE3\SHEETS\LS-100.DWG

ABBREVIATIONS

AFF	ABOVE FINISH FLOOR
APPROX.	APPROXIMATELY
ARCH	ARCHITECTURAL
℄	BUILDING LINE
BLDG.	BUILDING
BOT.	BOTTOM
B.O.	BOTTOM OF
℄	CENTER LINE
C.G.	CENTER OF GRAVITY
C.J.	CONTROL JOINT
CLR	CLEAR
CP	COLUMN PLATE
COL.	COLUMN
CONC	CONCRETE
CONN	CONNECTION
CONT.	CONTINUOUS
DBL.	DOUBLE
DTL.	DETAIL
DIA., ø	DIAMETER
DIM.	DIMENSION
DN	DOWN
DWG.	DRAWING
EA.	EACH
EMBED	EMBEDMENT
EL.	ELEVATION
EOD	EDGE OF DECK
EQ.	EQUAL
EQUIP.	EQUIPMENT
EXIST.	EXISTING
EXT.	EXTERIOR
FDN	FOUNDATION
FFE	FINISH FLOOR ELEVATION
FIN.	FINISH
FLR.	FLOOR
F.S.	FAR SIDE
FT	FEET
GA.	GAGE
GALV.	GALVANIZED
GEN.	GENERAL
GR	GRADE
HORIZ.	HORIZONTAL
HT.	HEIGHT
I.D.	INSIDE DIAMETER
IN.	INCH
INT.	INTERIOR
LB	POUNDS
LG	LONG
MANUF.	MANUFACTURER
MAX.	MAXIMUM
MECH.	MECHANICAL
MIN.	MINIMUM
N.S.	NEAR SIDE
NTS	NOT TO SCALE
O.C.	ON CENTER
O.D.	OUTSIDE DIAMETER
ℙ	PLATE
R, RAD.	RADIUS
REF	REFERENCE
REQ'D, REQ.	REQUIRED
RTU	ROOF TOP UNIT (MECHANICAL)
S.S.	STAINLESS STEEL
SCH.	SCHEDULE
SECT.	SECTION
SHT.	SHEET
SIM.	SIMILAR
SP	SPACE
SPEC.	SPECIFICATION
SQ.	SQUARE
STD	STANDARD
STIFF	STIFFENER
T.O.	TOP OF
T.O.S.	TOP OF STEEL
THRU	THROUGH
TYP.	TYPICAL
U.N.O.	UNLESS NOTED OTHERWISE
U/S	UNDERSIDE
VERT.	VERTICAL
V.I.F.	VERIFY IN FIELD
W/	WITH
W.P.	WORK POINT
WWF	WELDED WIRE FABRIC

GENERAL NOTES

DESIGN LOADING (2012 IBC/UFC 3-301-01):

SNOW LOADS

GROUND SNOW LOAD, Pg:	50 PSF
EXPOSURE FACTOR, Ce:	1.0
THERMAL FACTOR, Ct:	1.1
IMPORTANCE FACTOR, I:	1.2
ROOF SNOW LOAD, Pf:	42 PSF

WIND LOADS

ULTIMATE WIND SPEED:	132 MPH
EXPOSURE:	C
RISK CATEGORY:	IV
INTERNAL PRESSURE COEFFICIENT	GCpi = ±0.18
C & C WALL LOADS:	+ 63.8/−114.7 PSF WITHIN 3' OF EDGE + 63.8/−64.8 PSF @ FIELD

SEISMIC LOADS

SITE CLASSIFICATION:	A
SEISMIC DESIGN CATEGORY:	A
RISK CATEGORY	II *
SEISMIC IMPORTANCE FACTOR:	1.5
0.2 SEC. SPECTRAL RESPONSE, Ss:	0.27g
1 SEC. SPECTRAL RESPONSE, S1:	0.08g
SEISMIC RESISTING SYSTEM:	STEEL SYSTEMS NOT SPECIFICALLY DETAILED FOR SEISMIC RESISTANCE (BRACED FRAME)
RESPONSE MODIFICATION FACTOR, R:	3.0
SEISMIC RESPONSE COEFFICIENT, Cs:	0.01
SEISMIC ANALYSIS PROCEDURE:	EQUIVALENT LATERAL FORCE PROCEDURE

LIVE LOADS

INTERIOR SLABS	125 PSF
ROOF	50 PSF
SNOW LOAD	50 PSF

* PER IBC & ASCE-7, RISK CATEGORY OF DEFUELING FACILITY HAS BEEN SET AT II, AS A CONSERVATIVE MEASURE THE BUILDING DESIGN HAS ASSUMED A RISK CATEGORY OF IV.

1. THE NOTES ON THESE DRAWINGS ARE NOT INTENDED TO REPLACE SPECIFICATIONS. SEE SPECIFICATIONS FOR REQUIREMENTS IN ADDITION TO GENERAL NOTES. INCONSISTENCIES BETWEEN THESE DRAWINGS AND THE SPECIFICATIONS SHALL BE BROUGHT TO THE ATTENTION OF PNSY FOR RESOLUTION PRIOR TO PROCEEDING WITH THE AFFECTED PORTION OF THE WORK.

2. STRUCTURAL DRAWINGS SHALL BE USED IN CONJUNCTION WITH JOB SPECIFICATIONS AND ARCHITECTURAL, STRUCTURAL, MECHANICAL, ELECTRICAL, PLUMBING, SITE DRAWINGS & GEOTECHNICAL SPECIFICATIONS. CONSULT THESE DRAWINGS FOR LOCATIONS AND DIMENSIONS OF OPENINGS, CHASES, INSERTS, REGLETS, SLEEVES, DEPRESSIONS, AND OTHER DETAILS NOT SHOWN ON STRUCTURAL DRAWINGS.

3. ALL DIMENSIONS AND CONDITIONS SHALL BE VERIFIED IN THE FIELD. ANY DISCREPANCIES SHALL BE BROUGHT TO THE ATTENTION OF NAVFAC, PNSY FOR RESOLUTION BEFORE PROCEEDING WITH THE AFFECTED PART OF THE WORK.

GENERAL NOTES (CONT)

4. THE STRUCTURE IS DESIGNED TO BE SELF SUPPORTING AND STABLE ONLY AFTER THE STRUCTURAL WORK CONTAINED IN THE DRAWINGS IS COMPLETED. IT IS THE CONTRACTOR'S SOLE RESPONSIBILITY TO DETERMINE ERECTION PROCEDURES AND SEQUENCE TO ENSURE THE SAFETY OF THE BUILDING AND ITS COMPONENTS DURING ERECTION. THIS INCLUDES THE ADDITION OF NECESSARY SHORING, SHEETING, TEMPORARY BRACING, GUYS OR TIEDOWNS. SUCH MATERIAL SHALL REMAIN THE PROPERTY OF THE CONTRACTOR AFTER COMPLETION OF THE PROJECT.

5. WHERE COLUMNS DO NOT HAVE A MINIMUM OF FOUR ANCHOR BOLTS, THE CONTRACTOR SHALL SHORE, GUY OR BRACE THE TOP OF THE COLUMNS UNTIL THE COLUMNS ARE OTHERWISE MADE STABLE BY THE PERMANENT STRUCTURE.

6. SECTIONS AND DETAILS SHOWN ON ANY STRUCTURAL DRAWINGS SHALL BE CONSIDERED TYPICAL FOR SIMILAR CONDITIONS.

7. THE CONTRACTOR SHALL SUBMIT COMPLETE SHOP DRAWINGS FOR ALL PARTS OF THE WORK, INCLUDING DESCRIPTION OF SHORING, AND CONSTRUCTION METHODS AND SEQUENCING WHERE APPLICABLE. NO PERFORMANCE OF THE WORK, SHALL COMMENCE WITHOUT REVIEW AND APPROVAL OF THE SHOP DRAWINGS BY NAVFAC, PNSY. THE CONTRACTOR SHALL INDICATE ON THE SHOP DRAWINGS WHICH PORTIONS OF THE WORK ARE TO BE PERFORMED OFF SITE AND WHICH PORTIONS WILL BE PERFORMED AT THE SITE.

8. ALL APPLICABLE FEDERAL, STATE, AND MUNICIPAL REGULATIONS SHALL BE FOLLOWED, INCLUDING THE FEDERAL DEPARTMENT OF LABOR OCCUPATIONAL SAFETY AND HEALTH ADMINISTRATION.

9. REFER TO SPECIFICATIONS FOR REQUIRED STRUCTURAL TESTS AND SPECIAL INSPECTIONS.

10. DATUM TOP OF FOUNDATION, ELEVATION 10'-7" (SEE VOLUME 1) = BUILDING ELEVATION 0'-0".

COLD FORMED LIGHT GAUGE STEEL FRAMING

1. COLD FORMED STEEL FRAMING MEMBERS SHALL BE OF THE TYPE, SHAPE, SIZE, GAUGE, AND SPACING AS SHOWN ON THE DRAWINGS. MEMBER TYPES AND SIZES SHOWN ON THE DRAWINGS REFER TO MEMBERS MANUFACTURED BY THE DIETRICH INDUSTRIES, INC. MEMBERS EQUIVALENT IN SHAPE, SIZE, STIFFNESS, AND STRENGTH BY OTHER MANUFACTURERS MAY BE SUBSTITUTED FOR FRAMING MEMBERS SHOWN. ALTERNATE MEMBERS SHALL BE SUBJECT TO REVIEW AND APPROVAL BY THE NAVFAC, PNSY PRIOR TO FABRICATION AND ERECTION.

2. ALL COLD FORMED STEEL FRAMING SHALL CONFORM TO THE ANSI SPECIFICATION FOR THE DESIGN OF COLD-FORMED STRUCTURAL MEMBERS.

3. COLD FORMED STRUCTURAL TRACKS AND STUDS 12, 14 AND 16 GAUGE MATERIALS SHALL BE FORMED WITH ASTM A446, GRADE D OR ASTM A570, GRADE 50 STEEL WITH A MINIMUM FY=50 KSI. COLD-FORMED STRUCTURAL TRACKS AND STUDS 18 GAUGE AND LIGHTER SHALL BE FORMED FROM ASTM A446, GRADE A OR ASTM A570, GRADE 33 GALVANIZED. FASTENINGS SHALL BE AS SHOWN ON THE DRAWINGS. FASTENINGS NOT SHOWN SHALL BE AS RECOMMENDED BY THE MANUFACTURER.

4. SHEET STEEL SHALL BE AS FOLLOWS:
   a. JOISTS, GIRTS — ASTM A1003/A1003A STRUCTURAL QUALITY, Fy=50ksi, G60 GALVANIZING

5. CONTRACTOR SHALL PROVIDE STANDARD STEEL BLOCKING, BRIDGING, CLIP ANGLES, REINFORCEMENTS AND ACCESSORIES. ACCESSORIES SHALL BE AS RECOMMENDED BY FRAMING MANUFACTURER FOR APPLICATIONS INDICATED AND AS REQUIRED TO PROVIDE A COMPLETE FRAMING SYSTEM.

6. JOINTS SHALL UTILIZE ASTM A325 BOLTS OR ASTM C1513 SELF TAPPING SCREWS, SIZED TO SUIT APPLICATION AND LOADS INDICATED.

7. WELDING ELECTRODES SHALL COMPLY WITH AWS STANDARDS, AND ALL WELD PROCEDURES SHALL BE ACCOMPLISHED IN ACCORDANCE WITH AWS D1.3.

8. USE ZINC RICH PAINT PER ASTM A780 FOR TOUCH UP AND REPAIR OF GALVANIZED SURFACES.

STRUCTURAL STEEL NOTES

1. STRUCTURAL STEEL FABRICATION, ERECTION, AND CONNECTION DESIGN SHALL CONFORM TO AISC'S "SPECIFICATION FOR THE DESIGN, FABRICATION, AND ERECTION OF STRUCTURAL STEEL" 14th EDITION.

2. STEEL FABRICATION AND ERECTION SHALL CONFORM TO AISC "CODE OF STANDARD PRACTICE FOR STEEL BUILDINGS AND BRIDGES" AISC-303

2. STRUCTURAL STEEL SHALL CONFORM TO THE FOLLOWING:

a. WIDE FLANGE SHAPES	ASTM A992
b. CHANNELS @ CRANE RUNWAY	ASTM A572, GRADE 50
c. PLATES AND OTHER SHAPES	ASTM A36
d. SQUARE & RECTANGULAR TUBING	ASTM A500, GRADE B
e. ROUND PIPES AND TUBING	ASTM A53, GRADE B
f. ANCHOR RODS	ASTM F1554, GRADE 36
g. HEADED STUDS	ASTM A108
h. ROLLED FLOOR OR ROOF PLATE	ASTM A756 OR A36

3. FIELD CONNECTIONS SHALL BE BOLTED USING ASTM A325 OR A490 HIGH STRENGTH BOLTS, UNLESS NOTED OTHERWISE.

4. BOLTS ARE BEARING TYPE AND MAY BE EITHER SNUG TIGHTENED OR FULLY TENSIONED. BOLT HOLES SHALL BE STANDARD SIZES UNLESS OTHERWISE APPROVED BY THE ENGINEER OF RECORD.

5. WELDING SHALL CONFORM TO AWS D1.1. WELDING ELECTRODES SHALL COMPLY WITH AWS REQUIREMENTS.

6. THE DESIGN OF CONNECTIONS NOT SHOWN ON THE DRAWINGS SHALL BE PROVIDED BY THE FABRICATOR. CONNECTIONS SHALL BE DESIGNED FOR THE FORCES SHOWN. CONNECTIONS SHALL BE DESIGNED IN ACCORDANCE WITH AISC MANUAL OF STEEL CONSTRUCTION 14TH EDITION. DESIGN CALCULATIONS SHALL BE PREPARED BY A PROFESSIONAL ENGINEER REGISTERED IN THE STATE OF MAINE. SUBMIT SEALED CALCULATIONS WITH SHOP DRAWINGS.

7. ALL STEEL SHALL BE FABRICATED AND SHIPPED AS SHOP PRIMED & PAINTED STEEL UNLESS NOTED OTHERWISE.

8. STEEL MEMBERS SHALL BE CUT FROM FULL LENGTH STOCK. UNAUTHORIZED SPLICES WILL BE CAUSE FOR REJECTION.

ALUMINUM GRATING NOTES

1. ALUMINUM GRATING BEARING BARS SHALL CONFORM TO ASTM B221.

2. GRATING SHALL BE INSTALLED USING THE WIDEST MANAGEABLE PANEL SECTIONS POSSIBLE, HOWEVER SECTIONS MAY NOT WEIGH MORE THAN 50 LB.

3. ALL EDGES SHALL BE BANDED.

SYM	DESCRIPTION	DATE	APPR
0	ISSUED FOR CONSTRUCTION	10/28/2016	CBC

NAVFAC

STATE OF MAINE — BRIAN J. BEAULIEU No. 12004 — LICENSED PROFESSIONAL ENGINEER — 10/28/16 — SEAL

Colby Company engineering — A/E INFO

APPROVED: David W. Krumfield — FOR COMMANDER NAVFAC

ACTIVITY: TIM FISHER, C. 2370.6 BRANCH HEAD

SATISFACTORY TO DATE 10/28/2016

DES BJB | DRW ERB | CHK CBC

PMDM: PETER STOCKLESS

BRANCH MANAGER: IAN BODWELL

FEA/PM&E: AMIN BAHROUR

FIRE PROTECTION: PATRICK BAKAJ

DEPARTMENT OF THE NAVY
NAVAL FACILITIES ENGINEERING COMMAND
PUBLIC WORKS DEPARTMENT - MAINE

NAVAL FACILITIES ENGINEERING COMMAND ~ MID-ATLANTIC
NAVAL SHIPYARD - PORTSMOUTH, NH

PORTSMOUTH NAVAL SHIPYARD
KITTERY, ME

DRY DOCK #1 DEFUELING COMPLEX
ACE-3

STRUCTURAL GENERAL NOTES SHEET

EPROJECT NO.: 1363311

CONSTR. CONTR. NO. N40085-17-C-5002

NAVFAC DRAWING NO. 12735224

SHEET 7 OF 43

S-001 | DD1-16-1305

DRAWFORM REVISION: 10 OCTOBER 2014

10/28/2016 7:25:40 AM X:\297 PORTSMOUTH NAVAL SHIPYARD\297.005.001 - DD#1 DEFUELING COMPLEX DESIGN\DRAWINGS\ACE3\SHEETS\S-001.DWG

Scale: 3/8" = 1'-0"

NOTES

1. BP-# INDICATES BASEPLATE TYPE. SEE A1, A2, A3 AND A5-S-501

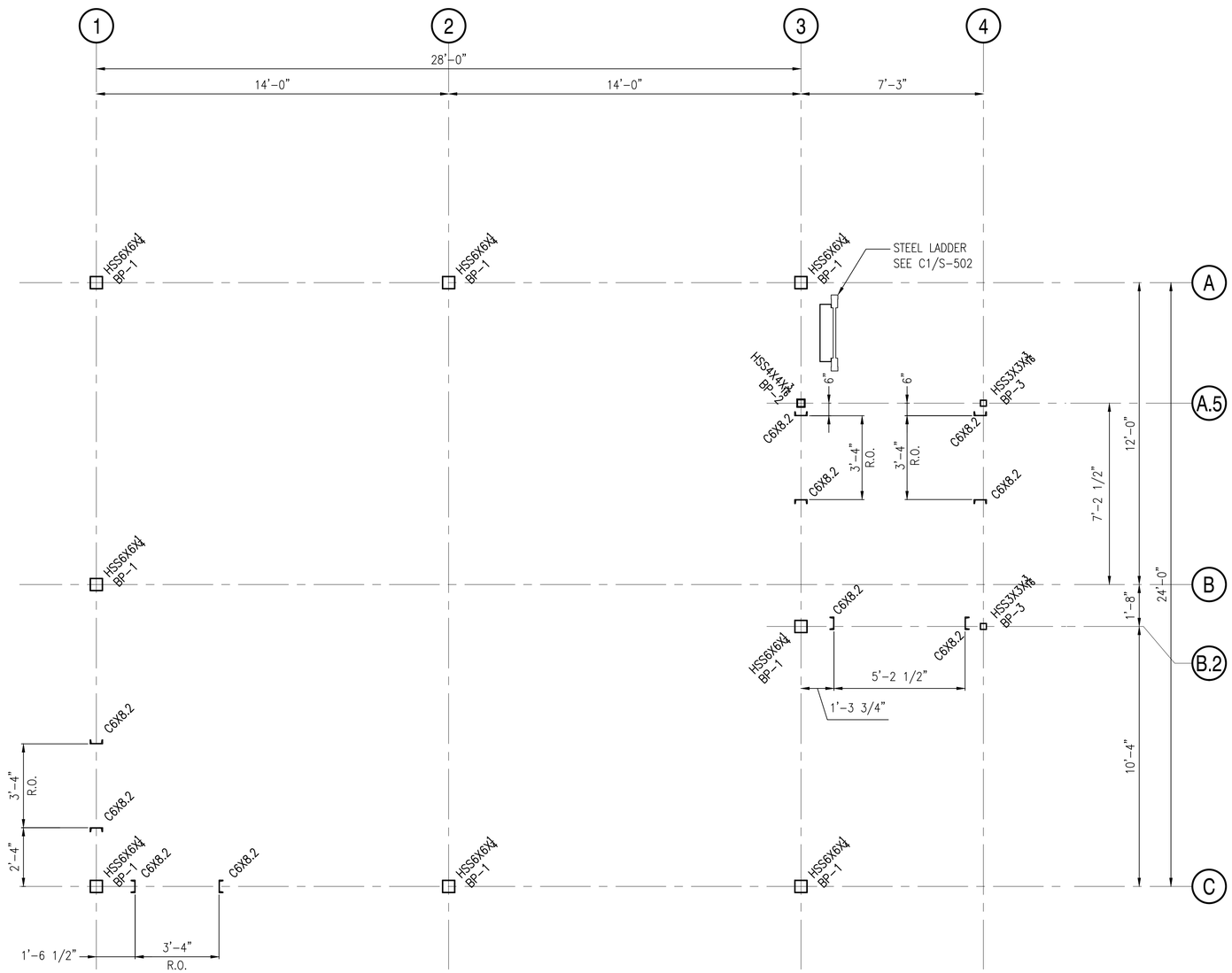

COLUMN GRID PLAN

SCALE: 3/8" = 1'-0"

PLAN NORTH

SYM	DESCRIPTION	DATE	APPR
0	ISSUED FOR CONSTRUCTION	10/28/2016	CBC

NAVFAC

STATE OF MAINE
BRIAN J. BEAULIEU
No. 12004
LICENSED PROFESSIONAL ENGINEER
10/28/16
SEAL

Colby Company engineering
A/E INFO

APPROVED
FOR COMMANDER NAVFAC

ACTIVITY
TIM FISHER
C. 2370.6 BRANCH HEAD

SATISFACTORY TO DATE 10/28/2016

DES BJB DRW ERB CHK CBC

PM/CM	PETER STOCKLESS
BRANCH MANAGER	IAN BODWELL
FEAD/PM/E	AMIN BAHROUR
FIRE PROTECTION	PATRICK BAKAJ

DEPARTMENT OF THE NAVY
NAVAL FACILITIES ENGINEERING COMMAND
PUBLIC WORKS DEPARTMENT - MAINE

NAVAL FACILITIES ENGINEERING COMMAND ~ MID-ATLANTIC
NAVAL SHIPYARD - PORTSMOUTH, NH

PORTSMOUTH NAVAL SHIPYARD
KITTERY, ME

DRY DOCK #1 DEFUELING COMPLEX
ACE-3

COLUMN GRID PLAN

EPROJECT NO.: 1363311

CONSTR. CONTR. NO.
N40085-17-C-5002

NAVFAC DRAWING NO.
12735225

SHEET 8 OF 43

S-100 | DD1-16-1306

DRAWFORM REVISION: 10 OCTOBER 2014

10/28/2016 7:25:45 AM X:\297 PORTSMOUTH NAVAL SHIPYARD\297.005.001 - DD#1 DEFUELING COMPLEX DESIGN\DRAWINGS\ACE3\SHEETS\S-100.DWG

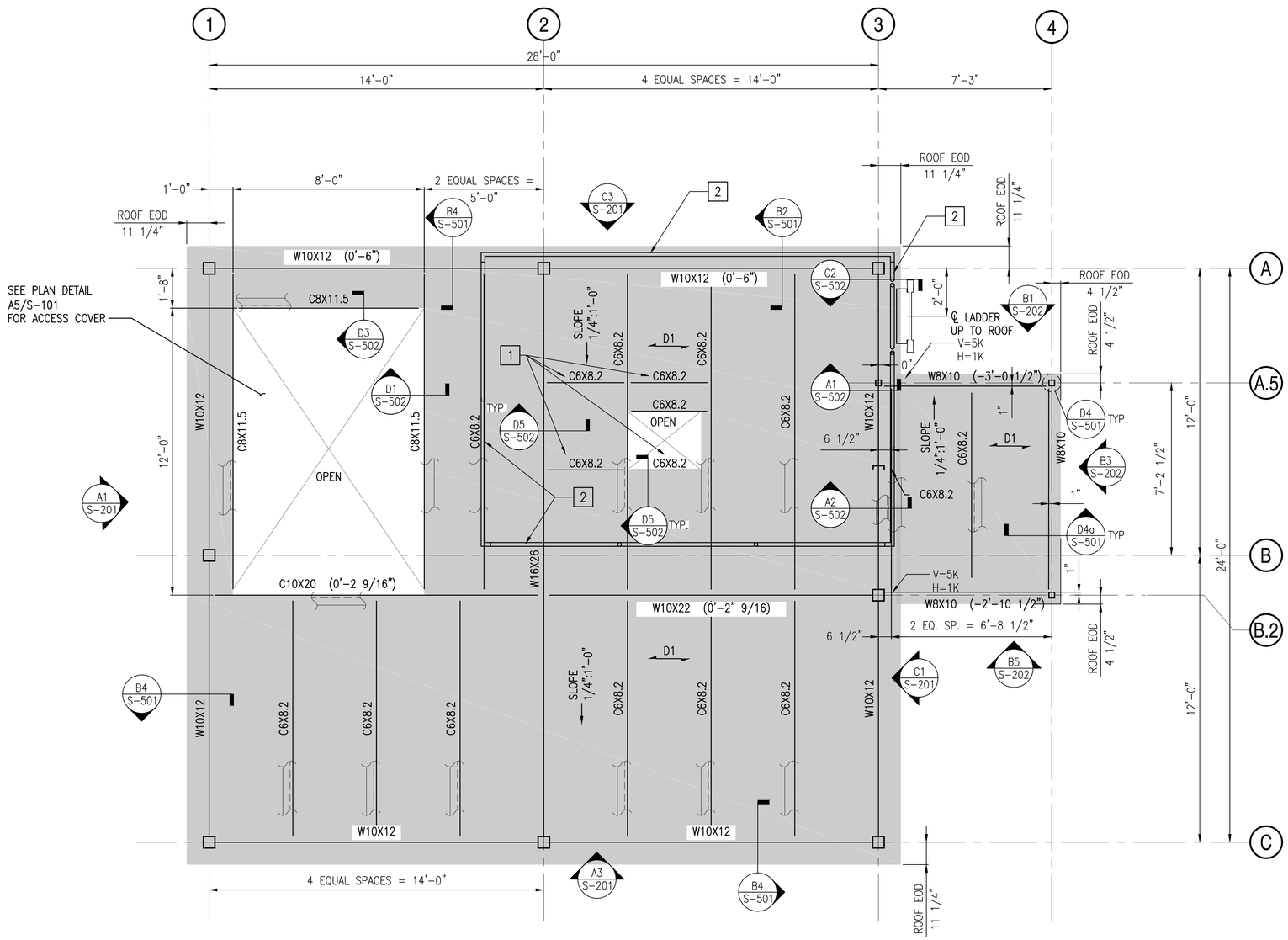

FRAMING PLAN AT ROOF

SCALE: 3/8" = 1'-0"

T.O.S. EL. 11'-8" (U.N.O.)

PLAN NORTH

NOTES

1. EVERY OTHER GUARDRAIL POST SHALL ALIGN OVER THE CENTER OF ROOF FRAMING.
2. BEAM CONNECTIONS SHALL BE DESIGNED FOR THE FOLLOWING SHEAR FORCES UNLESS NOTED OTHERWISE:

C6	10 KIPS
C8/W8	15 KIPS
C10/W10	20 KIPS
C12/W12	25 KIPS
W16	35 KIPS

FRAMING LEGEND

D1 DENOTES 1/4" PLATE

DX DENOTES DECK SPAN

DENOTES 1/4" STEEL PLATE, SEAM WELDED TO ADJACENT PLATES, INTERMITTENT WELDS TO STRUCTURE BELOW EXCEPT SEAM WELDED WHERE REQUIRED FOR WEATHER RESISTANCE. PROVIDE SLIP RESISTANT PAINT WITHIN GUARDRAIL ENCLOSURE ONLY. SEE SPECIFICATION 099713.26 FOR SLIP RESISTANT PAINT REQUIREMENTS.

KEYED NOTES:

1. LOCATE FRAMING BELOW RTU-1 CURB. COORDINATE ALL DIMENSIONS INCLUDING ROOF DUCT PENETRATIONS WITH MANUFACTURE.
2. GUARDRAIL, SEE B2/S-501

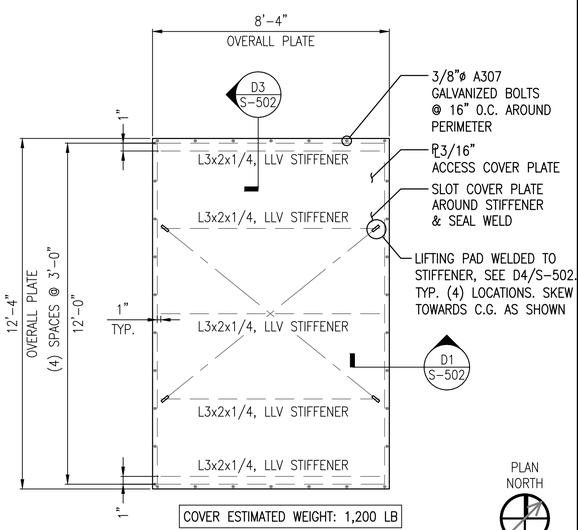

ROOF ACCESS COVER PLAN

SCALE: 3/8"=1'-0"

S-101 A5

PLAN NORTH

Scale: 3/8" = 1'-0"

SYM	DESCRIPTION	DATE	APPR
0	ISSUED FOR CONSTRUCTION	10/28/2016	CBC

NAVFAC

STATE OF MAINE — BRIAN J. BEAULIEU No. 12004 — LICENSED PROFESSIONAL ENGINEER — 10/28/16 — SEAL

Colby Company engineering — A/E INFO

APPROVED BY: David W. Krumfeld — FOR COMMANDER NAVFAC

ACTIVITY: TIM FISHER, C. 2370.6 BRANCH HEAD

SATISFACTORY TO DATE 10/28/2016

DES BJB | DRW ERB | CHK CBC

PM/DM: PETER STOCKLESS

BRANCH MANAGER: IAN BODWELL

FEAD/PM&E: AMIN BAHROUR

FIRE PROTECTION: PATRICK BAKAJ

DEPARTMENT OF THE NAVY — NAVAL FACILITIES ENGINEERING COMMAND — PUBLIC WORKS DEPARTMENT - MAINE

NAVAL FACILITIES ENGINEERING COMMAND – MID-ATLANTIC — NAVAL SHIPYARD - PORTSMOUTH, NH

PORTSMOUTH NAVAL SHIPYARD — KITTERY, ME

DRY DOCK #1 DEFUELING COMPLEX — ACE-3

FRAMING PLAN AT ROOF

EPROJECT NO.: 1363311

CONSTR. CONTR. NO.: N40085-17-C-5002

NAVFAC DRAWING NO.: 12735226

SHEET 9 OF 43

S-101 | DD1-16-1307

DRAWFORM REVISION: 10 OCTOBER 2014

10/28/2016 7:25:50 AM X:\297 PORTSMOUTH NAVAL SHIPYARD\297.005.001 - DD#1 DEFUELING COMPLEX DESIGN\DRAWINGS\ACE3\SHEETS\S-101.DWG

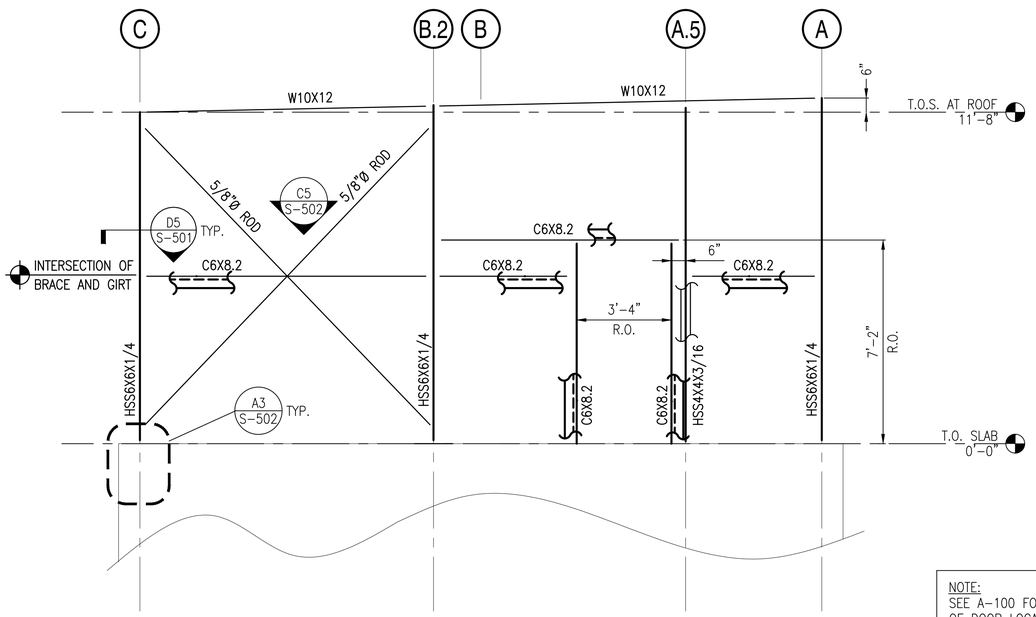

NOTE:
SEE A-100 FOR CENTER OF DOOR LOCATIONS

FRAMING ELEVATION AT COLUMN LINE 3 (C1)

SCALE: 3/8" = 1'-0" S-101

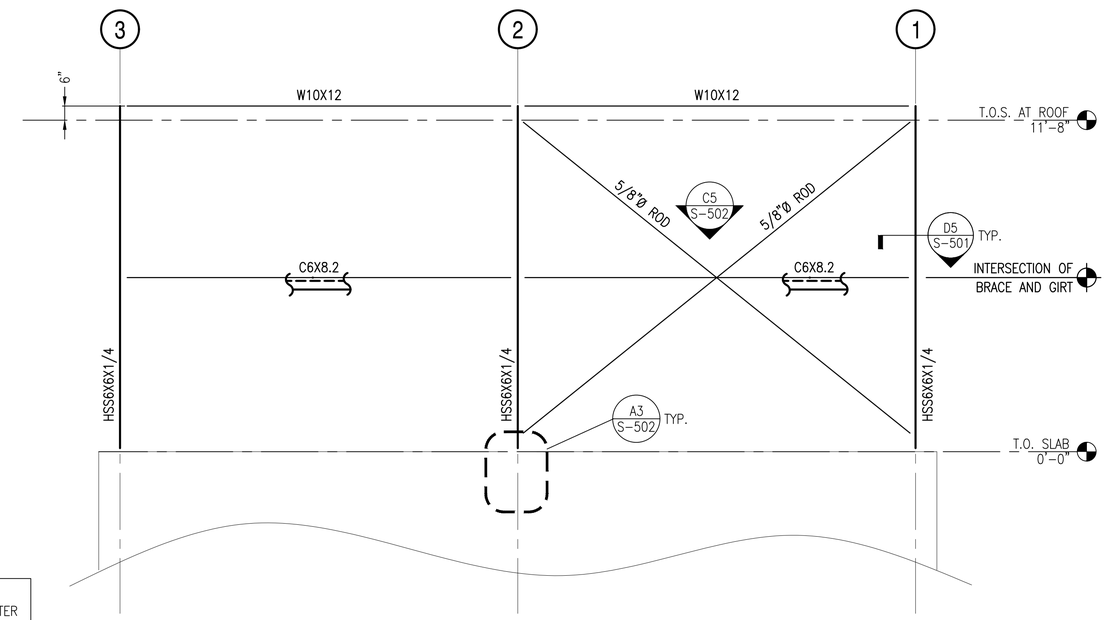

FRAMING ELEVATION AT COLUMN LINE A (C3)

SCALE: 3/8" = 1'-0" S-101

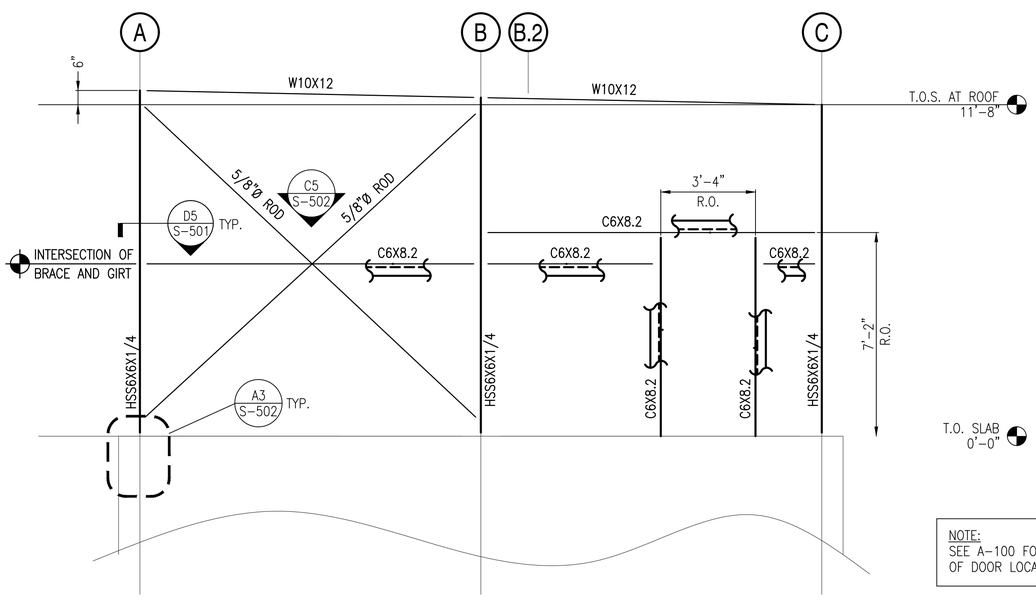

NOTE:
SEE A-100 FOR CENTER OF DOOR LOCATIONS

FRAMING ELEVATION AT COLUMN LINE 1 (A1)

SCALE: 3/8" = 1'-0" S-101

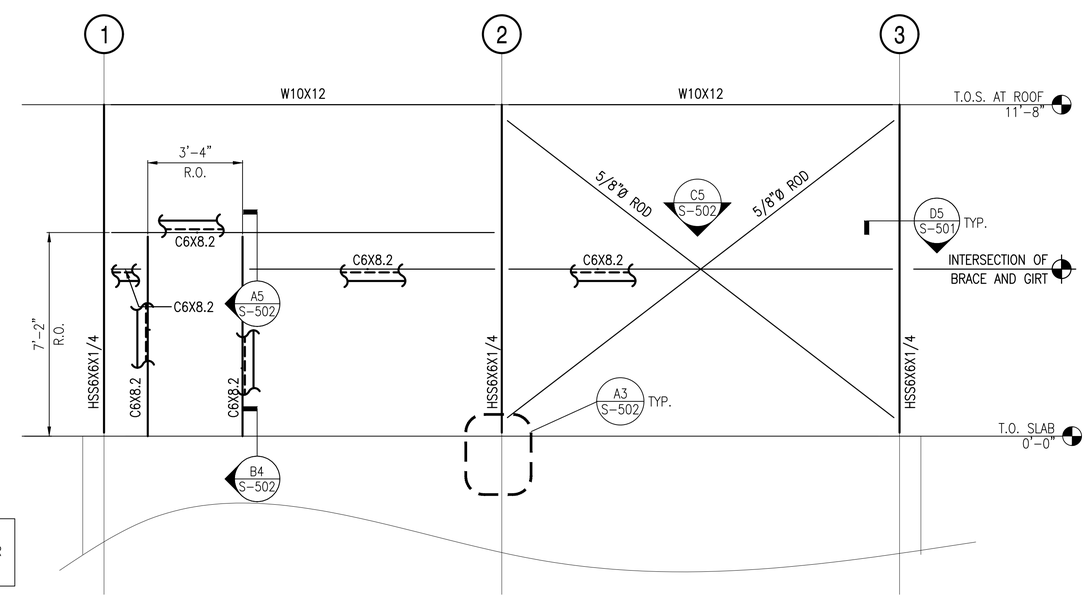

FRAMING ELEVATION AT COLUMN LINE C (A3)

SCALE: 3/8" = 1'-0" S-101

0 2' 4' 6'
Scale: 3/8" = 1'-0"

SYM	DESCRIPTION	DATE	APPR
0	ISSUED FOR CONSTRUCTION	10/28/2016	CBC

NAVFAC

STATE OF MAINE
BRIAN J. BEAULIEU
No. 12004
LICENSED PROFESSIONAL ENGINEER
10/28/16
SEAL

Colby Company engineering

A/E INFO

APPROVED
David W. Krumfield
FOR COMMANDER NAVFAC

ACTIVITY
TIM FISHER
C. 2370.6 BRANCH HEAD

SATISFACTORY TO DATE 10/28/2016

DES BJB DRW ERB CHK CBC

PMDM PETER STOCKLESS

BRANCH MANAGER IAN BODWELL

FEA/PM&E AMIN BAHROUR

FIRE PROTECTION PATRICK BAKAJ

DEPARTMENT OF THE NAVY
NAVAL FACILITIES ENGINEERING COMMAND
PUBLIC WORKS DEPARTMENT - MAINE

NAVAL FACILITIES ENGINEERING COMMAND ~ MID-ATLANTIC
NAVAL SHIPYARD - PORTSMOUTH, NH

KITTERY, ME
PORTSMOUTH NAVAL SHIPYARD
DRY DOCK #1 DEFUELING COMPLEX
ACE-3

FRAMING ELEVATIONS

EPROJECT NO.: 1363311

CONSTR. CONTR. NO.
N40085-17-C-5002

NAVFAC DRAWING NO.
12735227

SHEET 10 OF 43

S-201 DD1-16-1308

DRAWFORM REVISION: 10 OCTOBER 2014

10/28/2016 7:25:55 AM X:\297 PORTSMOUTH NAVAL SHIPYARD\297.005.001 - DD#1 DEFUELING COMPLEX DESIGN\DRAWINGS\ACE3\SHEETS\S-201.DWG

NOTE:
SEE A-100 FOR CENTER OF DOOR LOCATIONS

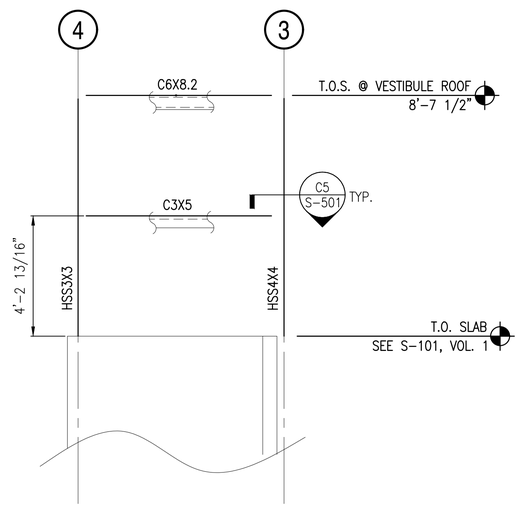

FRAMING ELEVATION AT COLUMN LINE A.5 (B1)
SCALE: 3/8" = 1'-0" S-101

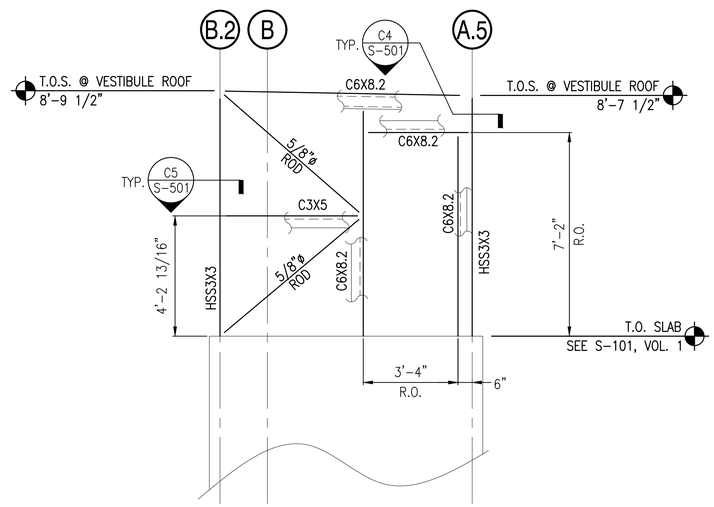

FRAMING ELEVATION AT COLUMN LINE 4 (B3)
SCALE: 3/8" = 1'-0" S-101

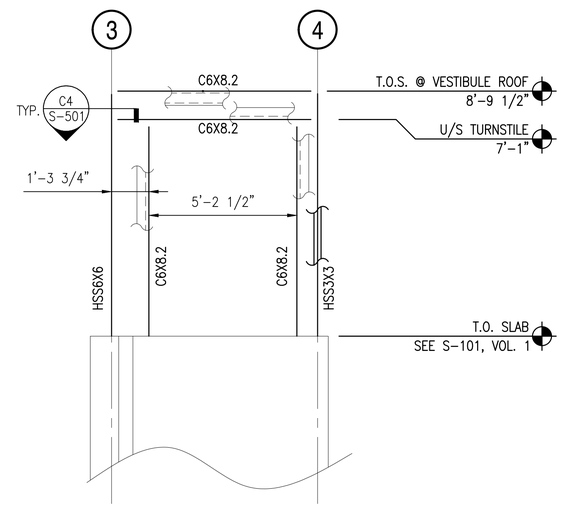

FRAMING ELEVATION AT COLUMN LINE B.2 (B5)
SCALE: 3/8" = 1'-0" S-101

0 2' 4' 6'
Scale: 3/8" = 1'-0"

SYM	DESCRIPTION	DATE	APPR
0	ISSUED FOR CONSTRUCTION	10/28/2016	CBC

NAVFAC

STATE OF MAINE
BRIAN J. BEAULIEU
No. 12004
LICENSED PROFESSIONAL ENGINEER
10/28/16
SEAL

Colby Company engineering
A/E INFO

APPROVED AS NOTED
David W. Grunfeld
FOR COMMANDER NAVFAC

ACTIVITY
TIM FISHER
C. 2370.6 BRANCH HEAD

SATISFACTORY TO DATE 10/28/2016
DES BJB DRW ERB CHK CBC
PM/DM PETER STOCKLESS
BRANCH MANAGER IAN BODWELL
FEA/DPM&E AMIN BAHROUR
FIRE PROTECTION PATRICK BAKAJ

DEPARTMENT OF THE NAVY
NAVAL FACILITIES ENGINEERING COMMAND
PUBLIC WORKS DEPARTMENT - MAINE
NAVAL FACILITIES ENGINEERING COMMAND – MID-ATLANTIC
NAVAL SHIPYARD - PORTSMOUTH, NH
PORTSMOUTH NAVAL SHIPYARD
KITTERY, ME
DRY DOCK #1 DEFUELING COMPLEX
ACE-3
FRAMING ELEVATIONS AT VESTIBULE

EPROJECT NO.: 1363311
CONSTR. CONTR. NO. N40085-17-C-5002
NAVFAC DRAWING NO. 12735228
SHEET 11 OF 43
S-202 DD1-16-1309

DRAWFORM REVISION: 10 OCTOBER 2014

10/28/2016 7:26:00 AM X:\297 PORTSMOUTH NAVAL SHIPYARD\297.005.001 - DD#1 DEFUELING COMPLEX DESIGN\DRAWINGS\ACE3\SHEETS\S-202.DWG

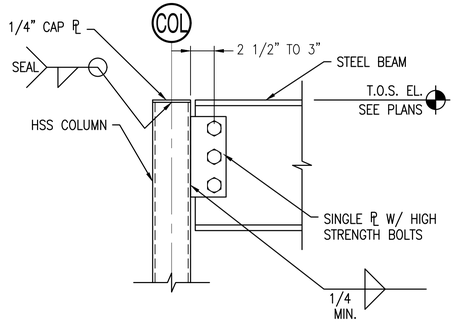

TYPICAL BEAM TO TUBE COLUMN CONNECTION (D1)
SCALE: 1 1/2"=1'-0"

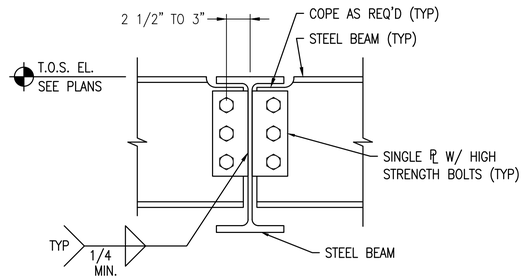

TYPICAL BEAM TO BEAM CONNECTION (D2)
SCALE: 1 1/2"=1'-0"

DETAIL (D4)
SCALE: 1-1/2" = 1'-0" S-101

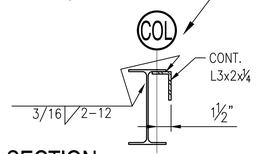

SECTION (D4a)
SCALE: 1-1/2" = 1'-0" S-101

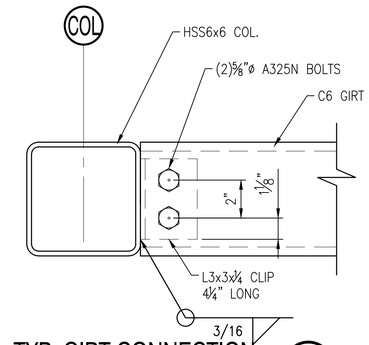

TYP. GIRT CONNECTION (D5)
SCALE: 3" = 1'-0" S-201

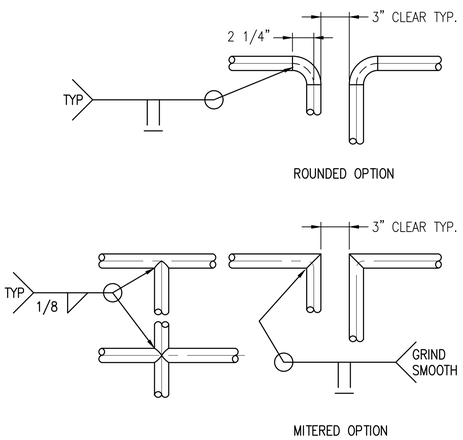

TYP. GUARDRAIL JOINTS (C1)
SCALE: 1 1/2"=1'-0"

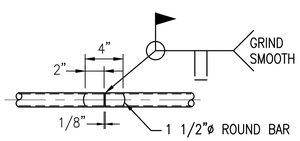

TYP. GUARDRAIL FIELD SPLICE (B1)
SCALE: 1 1/2"=1'-0"

NOTE:
EVERY OTHER GUARDRAIL POST SHALL ALIGN
OVER THE CENTER OF ROOF FRAMING.

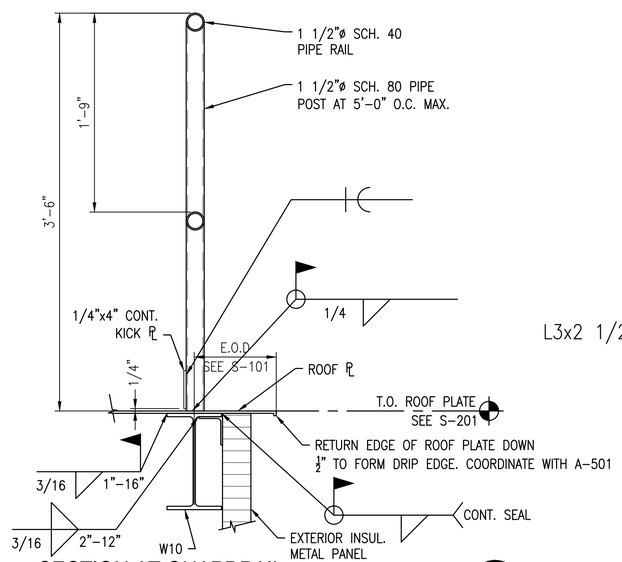

SECTION AT GUARDRAIL (B2)
SCALE: 1 1/2"=1'-0" S-101

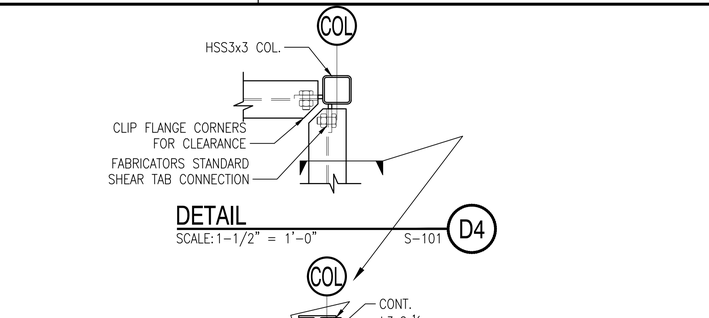

TYP. HEADER CONNECTION (C4)
SCALE: 3" = 1'-0" S-202

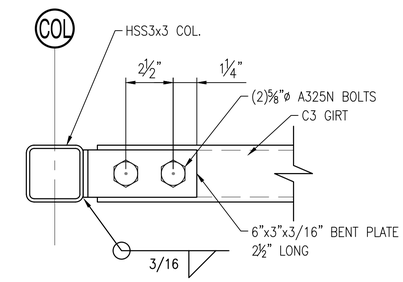

TYP. GIRT CONNECTION (C5)
SCALE: 3" = 1'-0" S-202

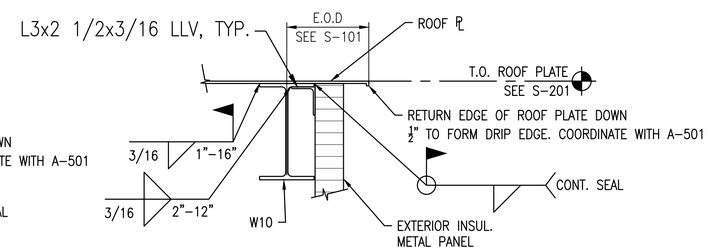

TYPICAL ROOF EDGE DETAIL (B4)
SCALE: 1 1/2"=1'-0" S-101

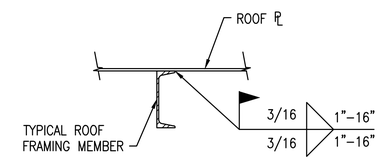

TYPICAL ROOF TO FRAMING DETAIL (B5)
SCALE: 1 1/2"=1'-0"

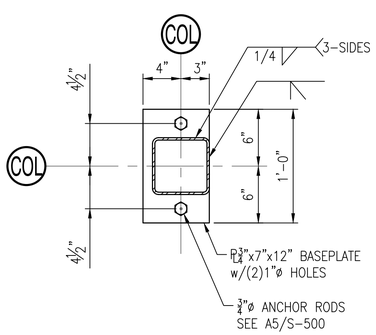

BASEPLATE TYPE BP-1 (A1)
SCALE: 1 1/2" = 1'-0" S-100

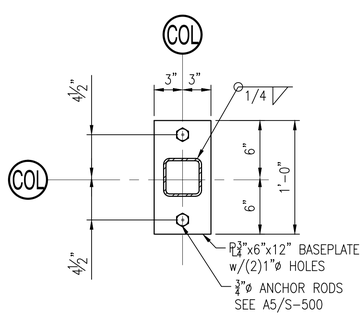

BASEPLATE TYPE BP-2 (A2)
SCALE: 1 1/2" = 1'-0" S-100

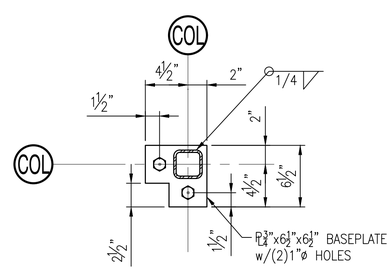

BASEPLATE TYPE BP-3 (A3)
SCALE: 1 1/2" = 1'-0" S-100

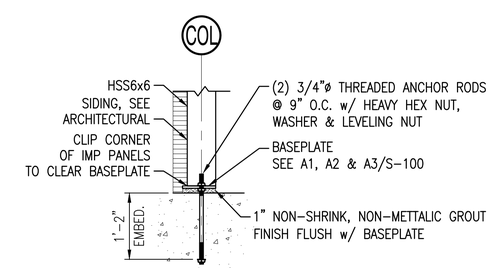

TYPICAL BASEPLATE DETAIL (A5)
SCALE: 3/4" = 1'-0" S-100

SYM	DESCRIPTION	DATE	APPR
0	ISSUED FOR CONSTRUCTION	10/28/2016	CBC

NAVFAC

STATE OF MAINE
BRIAN J. BEAULIEU
No. 12004
LICENSED
PROFESSIONAL ENGINEER
10/28/16
SEAL

Colby Company engineering
A/E INFO

APPROVED
David W. Krumfield
FOR COMMANDER NAVFAC

ACTIVITY
TIM FISHER
C. 2370.6 BRANCH HEAD

SATISFACTORY TO DATE 10/28/2016
DES BJB DRW BCH CHK CBC
PM/DM PETER STOCKLESS
BRANCH MANAGER IAN BODWELL
FEA/PM&E AMIN BAHROUR
FIRE PROTECTION PATRICK BAKAJ

DEPARTMENT OF THE NAVY
NAVAL FACILITIES ENGINEERING COMMAND
PUBLIC WORKS DEPARTMENT - MAINE
NAVAL FACILITIES ENGINEERING COMMAND – MID-ATLANTIC
NAVAL SHIPYARD - PORTSMOUTH, NH
PORTSMOUTH NAVAL SHIPYARD
KITTERY, ME
DRY DOCK #1 DEFUELING COMPLEX
ACE-3
TYPICAL FRAMING DETAILS

EPROJECT NO.: 1363311
CONSTR. CONTR. NO. N40085-17-C-5002
NAVFAC DRAWING NO. 12735229
SHEET 12 OF 43
S-501 DD1-16-1310

DRAWFORM REVISION: 10 OCTOBER 2014

10/28/2016 7:26:08 AM X:\297 PORTSMOUTH NAVAL SHIPYARD\297.005.001 - DD#1 DEFUELING COMPLEX DESIGN\DRAWINGS\ACE3\SHEETS\S-501.DWG

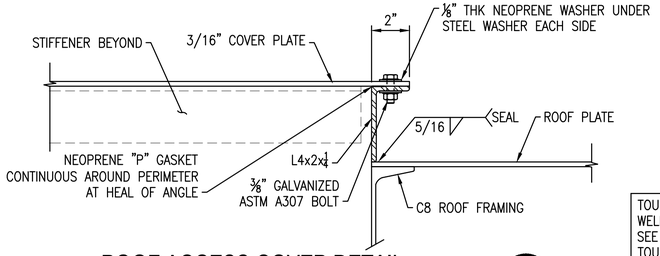

ROOF ACCESS COVER DETAIL (D1)

SCALE:3"=1'-0" S-101

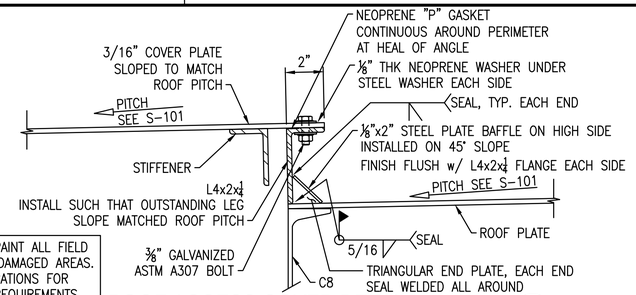

TOUCH-UP PAINT ALL FIELD WELDS AND DAMAGED AREAS. SEE SPECIFICATIONS FOR TOUCH-UP REQUIREMETNS

ROOF ACCESS COVER DETAIL (D3)

SCALE:3"=1'-0" S-101

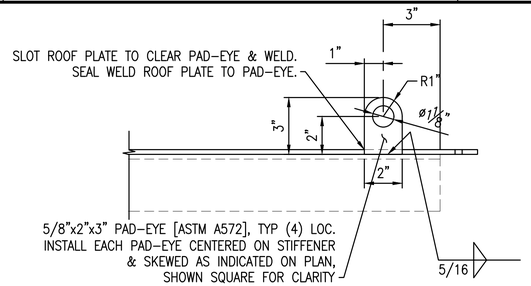

ROOF ACCESS COVER PAD-EYE DETAIL (D4)

SCALE:3"=1'-0" S-101

TOUCH-UP PAINT ALL FIELD WELDS AND DAMAGED AREAS. SEE SPECIFICATIONS FOR TOUCH-UP REQUIREMETNS

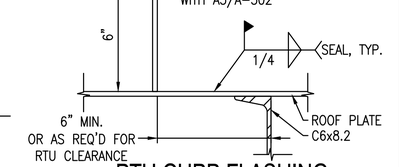

RTU CURB FLASHING ATTACHMENT PLATE (D5)

SCALE:3"=1'-0" S-101

LADDER NOTES:
1. LADDERS SHALL BE FABRICATED TO 29 CFR CH. XVII, PART 1910 – OCCUPATIONAL SAFETY AND HEALTH STANDARDS 1910.27, FIXED LADDERS.
2. CARBON STEEL LADDERS SHALL BE PAINTED.

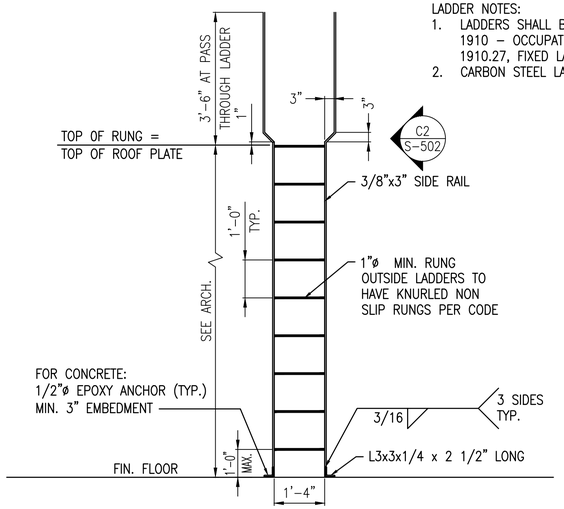

TYP. FIXED LADDER DETAIL (C1)

SCALE:1/2"=1'-0"

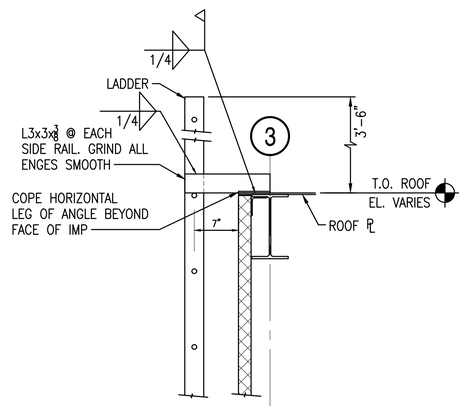

LADDER SUPPORT DETAIL (C2)

SCALE:1"=1'-0" S-101, S-502

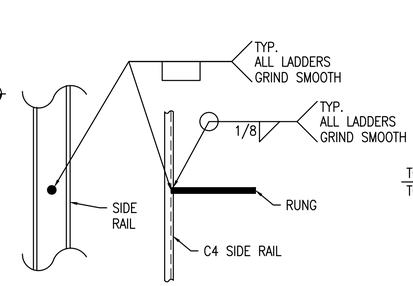

TYP. RUNG WELDING DETAIL (C3)

SCALE:1/2"=1'-0"

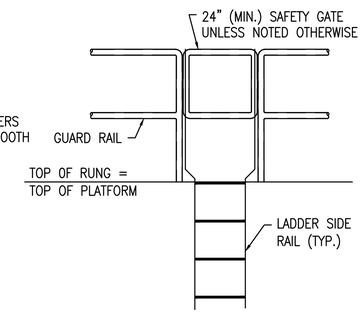

SAFETY GATE DETAIL (C4)

SCALE:1/2"=1'-0"

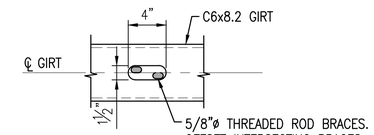

GIRT AT BRACE INTERSECTON DETAIL (C5)

SCALE:1 1/2"=1'-0" S-201

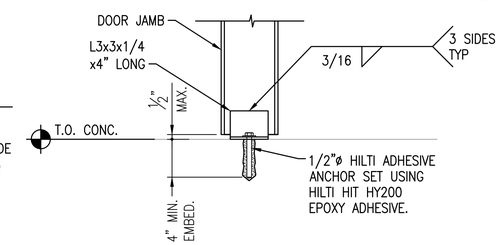

DOOR FRAME ATTACHMENT TO CONCRETE (B4)

SCALE:1 1/2"=1'-0" S-201

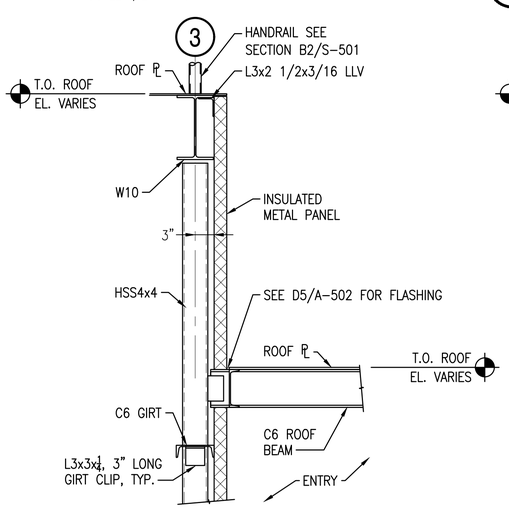

SECTION AT ENTRY ROOF (A1)

SCALE:1"=1'-0" S-101

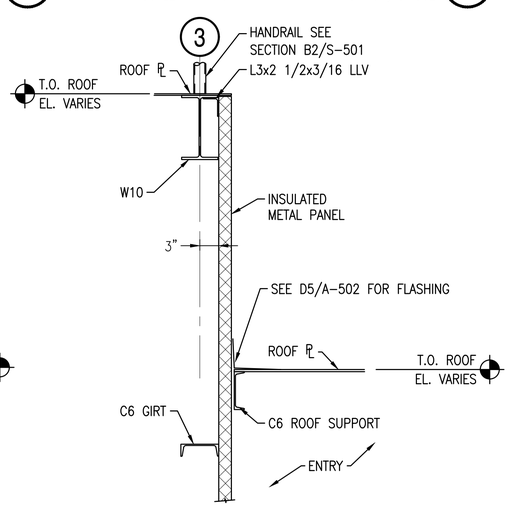

SECTION AT ENTRY ROOF SUPPORT (A2)

SCALE:1"=1'-0" S-101

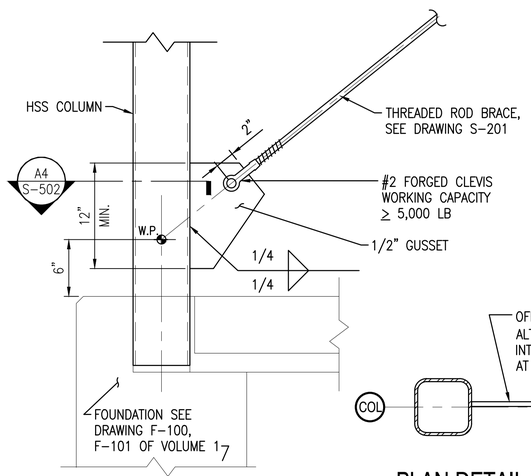

DIAGONAL BRACE TO TUBE COLUMN DETAIL (A3)

SCALE:1 1/2"=1'-0" S-201

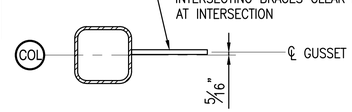

PLAN DETAIL (A4)

SCALE:1 1/2"=1'-0" S-502

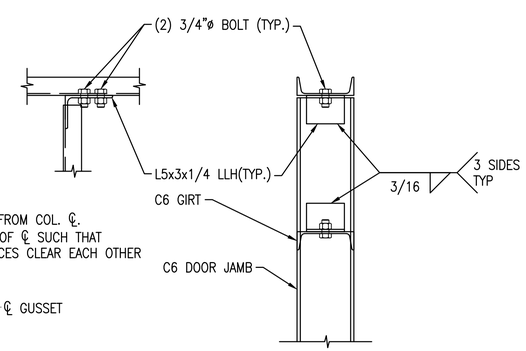

DOOR FRAME DETAIL (A5)

SCALE:1 1/2"=1'-0" S-201

Scale: 3" = 1'-0" (0, 3", 6", 9") | Scale: 1 1/2" = 1'-0" (0, 1/2', 1', 1 1/2') | Scale: 1" = 1'-0" (0, 1/2', 1', 2') | Scale: 1/2" = 1'-0" (0, 1', 2', 4')

SYM	DESCRIPTION	DATE	APPR
0	ISSUED FOR CONSTRUCTION	10/28/2016	CBC

NAVFAC

STATE OF MAINE — BRIAN J. BEAULIEU No. 12004 — LICENSED PROFESSIONAL ENGINEER — 10/28/16 — SEAL

Colby Company engineering — A/E INFO

APPROVED: Daniel W. Grunfeld — FOR COMMANDER NAVFAC

ACTIVITY: TIM FISHER, C. 2370.6 BRANCH HEAD — SATISFACTORY TO DATE 10/28/2016

DES BJB | DRW BCH | CHK CBC

PMDM: PETER STOCKLESS

BRANCH MANAGER: IAN BODWELL

FEAD/PMAE: AMIN BAHROUR

FIRE PROTECTION: PATRICK BAKAJ

DEPARTMENT OF THE NAVY — NAVAL FACILITIES ENGINEERING COMMAND — PUBLIC WORKS DEPARTMENT - MAINE

NAVAL FACILITIES ENGINEERING COMMAND ~ MID-ATLANTIC — NAVAL SHIPYARD - PORTSMOUTH, NH

PORTSMOUTH NAVAL SHIPYARD — KITTERY, ME

DRY DOCK #1 DEFUELING COMPLEX — ACE-3

LADDERS AND WALL DETAILS

EPROJECT NO.: 1363311

CONSTR. CONTR. NO.: N40085-17-C-5002

NAVFAC DRAWING NO.: 12735230

SHEET 13 OF 43

S-502 | DD1-16-1311

DRAWFORM REVISION 10 OCTOBER 2014

10/28/2016 7:26:29 AM X:\297 PORTSMOUTH NAVAL SHIPYARD\297.005.001 - DD#1 DEFUELING COMPLEX DESIGN\DRAWINGS\ACE3\SHEETS\S-502.DWG

ELEVATION, SECTION OR DETAIL SYMBOLS

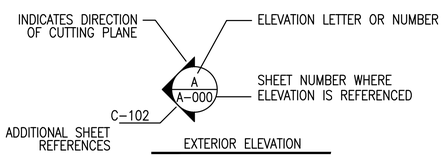

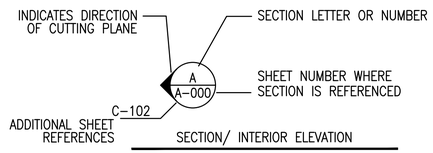

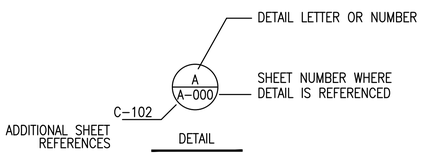

LEGEND

- CONCRETE
- STEEL
- INSULATION – RIGID
- EARTH
- CRUSHED STONE
- INSULATED METAL PANEL
- 2" STUDLESS WALL PANEL AND 1/2" LINER PANEL
- NON-SLIP PAINT SURFACE
- 204 DOOR TAG
- 1 KEYNOTE
- 2 HOUR FIRE RATED WALL
- REFERENCE PLANE ELEVATION

ABBREVIATIONS

AFF	ABOVE FINISH FLOOR
AFG	ABOVE FINISH GRADE
ACOUS.	ACOUSTICAL
ALUM	ALUMINUM
APPROX.	APPROXIMATELY
BLDG.	BUILDING
BOT.	BOTTOM
C.B.	CATCH BASIN
C.J.	CONTROL JOINT
C.O.	CLEAN OUT
C.R.	COLD ROLLED
CEM.	CEMENT
CL / ℄	CENTERLINE
CLG.	CEILING
COL.	COLUMN
CONC.	CONCRETE
CONST.	CONSTRUCTION
CONT.	CONTINUOUS
DBL.	DOUBLE
DTL.	DETAIL
DIA.	DIAMETER
DIM.	DIMENSION
DN	DOWN
DWG.	DRAWING
E.J.	EXPANSION JOINT
EA.	EACH
EL.	ELEVATION
ELECT.	ELECTRICAL
EPDM	ETHYLENE PROPYLENE DIENE MONOMER RUBBER
EQ.	EQUAL
EQUIP.	EQUIPMENT
EXIST.	EXISTING
EXP.	EXPANSION
EXT.	EXTERIOR
F/	FACE OF
F.D.	FLOOR DRAIN
FDN	FOUNDATION
FF	FINISH FLOOR
FFE	FINISHED FLOOR ELEVATION
FIN.	FINISH
FIP	FOAM IN PLACE
FLR.	FLOOR
FLUOR.	FLUORESCENT
FP	FIRE PROTECTION
FT	FEET
GA.	GAUGE
GALV.	GALVANIZED
GEN.	GENERAL
H.M.	HOLLOW METAL
HDWR	HARDWARE
HD.	HEAD
HORIZ.	HORIZONTAL
HR	HOUR
HT.	HEIGHT
HVAC	HEATING VENTILATING AIR CONDITIONING
I.D.	INSIDE DIAMETER
IMP	INSULATED METAL PANEL
IN.	INCH
INCAN.	INCANDESCENT
INSUL.	INSULATION
INT.	INTERIOR
JT.	JOINT
LT	LIGHT
LT. WT.	LIGHTWEIGHT
MANUF.	MANUFACTURER
MATL	MATERIAL
MAX.	MAXIMUM
MECH.	MECHANICAL
MIN.	MINIMUM
MLCP	INTERIOR METAL LINER CEILING PANEL
MTL	METAL
NIC	NOT IN CONTRACT
NO	NUMBER
NTS	NOT TO SCALE
O.C.	ON CENTER
O.D.	OUTSIDE DIAMETER
O.E.	ROUGH OPENING
OPP	OPPOSITE
OTS	OPEN TO STRUCTURE
PHIL	PHILLIPS
PL / ℙ	PLATE
PNSY	PORTSMOUTH NAVAL SHIPYARD
PTD	PAINTED
PW	PASSAGEWAY(S)
RAD.	RADIUS
REQ.	REQUIRED
RET.	RETAINING
RM.	ROOM
S.S.	STAINLESS STEEL
S.V.	SHEET VINYL
SCHED.	SCHEDULE
SECT.	SECTION
SHT.	SHEET
SIM.	SIMILAR
SPEC.	SPECIFICATION
SQ.	SQUARE
STD	STANDARD
STL	STEEL
STRUCT.	STRUCTURAL
T.O.	TOP OF
T.O.W.	TOP OF WALL
TEL.	TELEPHONE
THRU	THROUGH
TYP.	TYPICAL
U.O.N.	UNLESS OTHERWISE NOTED
VERT.	VERTICAL
VIF	VERIFY IN FIELD
W/	WITH
WC	WATER COLUMN
W.P.	WATERPROOF
W.W.F.	WELDED WIRE FABRIC

GENERAL NOTES

1. CONTRACTOR SHALL INSPECT THE INTERIOR AND EXTERIOR FRAMING TO ENSURE SPACING AND PLACEMENT OF THE STRUCTURAL MEMBERS MEETS THE REQUIREMENTS OF BOTH THE INTERIOR AND EXTERIOR WALL SYSTEMS. THE INSPECTION SHALL INCLUDE, BUT NOT BE LIMITED TO THE FOLLOWING: PLACEMENT OF FRAMING MEMBERS, TOLERANCE OF FRAMING MEMBERS, FRAMING AT WALL SYSTEM PENETRATIONS, INSTALLATION OF UTILITIES BETWEEN THE TWO WALL SYSTEMS, AND THE CAPABILITY TO ATTACH TO THE FRAMING WITHIN THE REQUIREMENTS OF THE WALL SYSTEM MANUFACTURERS.
2. SUBMIT A WRITTEN REPORT PER SPECIFICATION 07 42 63 PARAGRAPH 3.7.2 OF DEFICIENCIES THAT ARE OBSERVED.
3. FLASHING SHALL BE 24GA SHEETS, SEE SPECIFICATION 07 60 00. FLASHING COLOR: SELECTED BY GOVERNMENT.
4. ALL WELDING FOR ARCHITECTURAL ITEMS SHALL BE PER APPLICABLE SPECIFICATION SECTIONS. RECOMMENDED THAT WELDING OF ARCHITECTURAL ITEMS (EX. FLASHING, COMPLEMENTING WALL / CEILING SUPPORTS) BE PERFORMED IN THE SHOP AS MUCH AS POSSIBLE PRIOR TO ERECTION OF STRUCTURAL MEMBERS. ALL EXTERIOR FACING WELDS TO BE CONTINUOUS AND WEATHERTIGHT.
5. FLASHING SHALL BE A COMBINATION OF THE WALL SYSTEM MANUFACTURERS STANDARD FLASHING AS REQUIRED TO MEET WARRANTY REQUIREMENTS AND CUSTOM FLASHING. ALL FLASHING SHALL BE DESIGNED TO KEEP WATER FROM ENTERING THE BUILDINGS.
6. INDICATE ON SHOP DRAWINGS WHICH PENETRATIONS ARE TO BE FIRE STOPPED.
7. RESINOUS FLOOR COATINGS PLACED ON NEW CONCRETE SHALL BE TESTED TO ENSURE THAT THE MOISTURE LEVELS MEET THOSE REQUIRED BY THE COATING MANUFACTURER. SUBMIT MOISTURE LEVEL COMPLIANCE TESTS PER THE SPECIFICATION 15 DAYS PRIOR TO PLACEMENT OF COATINGS.
8. UNLESS NOTED OTHERWISE ALL DETAILS AND RELEVANT DIMENSIONS FOR EXTERIOR STAIRS, GRATING, LANDINGS, RAILINGS AND LADDERS ARE TO BE FOUND IN STRUCTURAL.
9. ALL FIXED RAILING TO BE 42" HIGH UNLESS STATED OTHERWISE.
10. THERMAL BRIDGING IS TO BE MINIMIZED WHEREVER POSSIBLE WITHIN THE STRUCTURE. FOAM-IN-PLACE INSULATION IS TO BE USED AT ALL LOCATIONS WHERE ROCK-WOOL INSULATION IS UNABLE TO BE PLACED.
11. NO UNCONTROLLED OPENINGS IN ANY ENCLOSURE TO BE GREATER THAN 96 SQUARE INCHES DUE TO SECURITY REQUIREMENTS.
12. ALL INTERIOR FACING FASTENERS TO BE CAPTIVE FASTENING IN ORDER TO PREVENT ANY POTENTIAL DEBRIS WITHIN AREA OF OPERATIONS.

MATERIALS

EXTERIOR

INSULATED METAL PANEL (IMP) ASSEMBLIES
SPECIFICATION SECTION 07 42 63

1. THE MAIN MATERIAL TO BE USED AS THE VERTICAL PROTECTIVE SKIN OF THE STRUCTURES IS TO BE INSULATED METAL PANEL (IMP) AND CONSISTS OF EITHER A 3 IN THICK PANEL OR A 6 INCH (2HR FIRE RATED) PANEL AS SHOWN IN THE DRAWINGS. THE IMP PANEL IS A SINGLE-COMPONENT SYSTEM PROVIDING AN EXTERIOR WEATHER BARRIER, INSULATING CORE AND INTERIOR VAPOR BARRIER.
2. AIR LEAKAGE MUST CONFORM TO THE LIMITS THROUGH THE WALL ASSEMBLY AREA WHEN TESTED ACCORDING TO ASTM E283.
3. THE IMP SHALL HAVE ABSOLUTELY NO UNCONTROLLED WATER PENETRATION THROUGH ANY OF THE PANEL JOINTS, HAVE NO WATER PENETRATION WHEN TESTED IN ACCORDANCE WITH ASTM E331, HAVE NO EVIDENCE OF WATER LEAKAGE WHEN TESTED ACCORDING TO AAMA 501.1 AND BE ABLE TO COMPLETELY RESIST WATER INFILTRATION.
4. THE IMP SHALL HAVE A POLYISO OR POLYURETHANE FOAM CORE AND SHALL PROVIDE A MINIMUM R-VALUE OF 7.5/IN OF THICKNESS WHEN TESTED IN ACCORDANCE WITH ASTM C518 AT A MEAN TEMPERATURE OF 75 DEG F.
5. JOINTS BETWEEN WALL PANELS REQUIRE A EXTENSIVE AND PARTICULAR SEALANT REQUIREMENTS AND ARE OF HIGH IMPORTANCE TO OPERATIONS. SEALANT SHALL MEET THE REQUIREMENTS OF THE WALL PANEL MANUFACTURER (07 42 63) AND JOINT SEALANT SPECIFICATION SECTION 07 92 00.
6. IN ALL BASE AND STACK JOINT CONDITIONS, IMP TO HAVE A MINIMUM AND CONTINUOUS 3" HEIGHT VERTICAL LEG FOR PANEL ATTACHMENT BEHIND. THERE IS TO BE A CONTINUOUS BUTYL SEALANT WITH MARRIAGE BEAD ALONG THIS CONTINUOUS FACE BETWEEN THE BACKSIDE OF THE IMP AND THE 3" HIGH VERTICAL LEG.
7. EXTRA CARE IS TO BE TAKEN WHEN APPLYING SEALANTS AT ALL IMP JOINTS, SEAMS AND TERMINATIONS DUE TO INTERIOR CLEANLINESS AND INTERIOR AIR REGULATION REQUIREMENTS OF THE FACILITY.

METAL PLATE ROOF

1. METAL PLATE ROOFING IT TO BE USED THROUGHOUT THE FACILITY WITH SLOPES AS SHOWN IN THE DRAWING PACKAGES. THICKNESS OF PLATE ARTICULATED WITHIN THE DRAWING PACKAGES.
2. ALL METAL PANEL ROOF EDGES TO HAVE A 2" DRIP EDGE, MEASURED OFF OF FACE OF WALL BELOW. THE DRIP EDGE IS TO HAVE 1" BENT EDGE POINTING DOWNWARDS. THE UNDERSIDE OF THIS METAL PLATE ROOF EDGE IS INTENDED TO PROVIDE A WEATHER-PROTECTED FACE THAT THE TOP EDGE PERIMETER FLASHING OF THE IMP CAN FASTEN TO, IN ORDER TO BETTER COMBAT POTENTIAL WATER INFILTRATION.
3. AT THE UNDERSIDE OF ALL EXPOSED METAL PLATE ROOFING, THERE IS TO BE ROCKWOOL INSULATION ATTACHED TO UNDERSIDE OF METAL PLATE ROOFING BY WELDED PINS AND RETAINER CAPS PER MANUFACTURER'S INSTRUCTIONS. ROCKWOOL TO BE CONTINUOUS ALONG ENTIRE UNDERSIDE OF METAL PLATE ROOF AND TERMINATE AGAINST BACKSIDE OF IMP WALLS TO AVOID ANY THERMAL BRIDGING. ANY POTENTIAL GAPS AT THESE JOINTS WITH THE IMP THAT CANNOT BE FILLED WITH ROCKWOOL ARE TO BE FILLED WITH FOAMED-IN-PLACE INSULATION (PER SPECIFICATION SECTION 07 21 19) IN ORDER TO AVOID ANY THERMAL BRIDGING AND TO CREATE FULLY INSULATED BOUNDARY WITHIN THE STRUCTURES.

INTERIOR

ALL INTERIOR FINISHES SHALL MEET THE REQUIREMENTS OF CLASS A OF NFPA 801 (FLAME SPREAD INDEX BETWEEN 0-25 AND SMOKE DEVELOPED INDEX BETWEEN 0-450). NO OPENING GREATER THAN 96 SQ IN ALLOWED WITHIN ANY ENCLOSURE. THIS IS FOR SECURITY PURPOSES AND IS TYP. OF ALL STRUCTURES IN COMPLEX.

INTERIOR METAL LINER CEILING PANELS (MLCP)
SPECIFICATION SECTION 07 42 13

1. THE MLCP IS TO BE INSTALLED AT ALL NON-RCA DESIGNATED AREAS WHERE ROCKWOOL INSULATION IS APPLIED TO UNDERSIDE OF METAL PLATE ROOF.
2. MLCP IS TO HAVE WEATHERTIGHT SEAL AT ALL CORNERS, JOINTS AND SEAMS. CLOSURE STRIPS TO BE USED AT ALL SEAMS OF MLCP AS WELL AS AT ANY CONNECTION TO IMP WALL PANELS IN ORDER TO CREATE CONTINUOUS SEAL AT BOTH PANEL SEAMS AND PERIMETER EDGES.

ACOUSTICAL CEILINGS
SPECIFICATION SECTION 09 51 00

1. TO BE INSTALLED WITHIN ENTIRETY OF ACE INTERIOR.
2. AREA OF CEILING PLANE BELOW PORTAL MONITOR ACCESS COVER TO BE INDEPENDENTLY REMOVABLE IN ORDER TO ALLOW EASE OF PORTAL MONITOR INSTALL / REMOVAL. SEE STRUCTURAL AND ARCHITECTURAL DRAWINGS FOR SPECIFICS.

SYM	DESCRIPTION	DATE	APPR
0	ISSUED FOR CONSTRUCTION	10/28/2016	CBC

NAVFAC

REGISTERED ARCHITECT DONALD M. DYER No. 859 STATE OF MAINE
10/28/16

Colby Company engineering
A/E INFO

APPROVED David W. Krumfield
FOR COMMANDER NAVFAC

ACTIVITY
TIM FISHER
C. 2370.6 BRANCH HEAD

SATISFACTORY TO DATE 10/28/2016
DES GJN DRW GJN CHK DMD
PMDM PETER STOCKLESS
BRANCH MANAGER IAN BODWELL
FEA/PM&E AMIN BAHROUR
FIRE PROTECTION PATRICK BAKAJ

DEPARTMENT OF THE NAVY
NAVAL FACILITIES ENGINEERING COMMAND
PUBLIC WORKS DEPARTMENT - MAINE
NAVAL FACILITIES ENGINEERING COMMAND ~ MID-ATLANTIC
NAVAL SHIPYARD - PORTSMOUTH, NH
KITTERY, ME
PORTSMOUTH NAVAL SHIPYARD
DRY DOCK #1 DEFUELING COMPLEX
ACE-3
ARCHITECTURAL LEGEND, ABBREVIATIONS AND GENERAL NOTES

EPROJECT NO.: 1363311
CONSTR. CONTR. NO. N40085-17-C-5002
NAVFAC DRAWING NO. 12735231
SHEET 14 OF 43
A-001 FAC-YR-NUM

DRAWFORM REVISION: 10 OCTOBER 2014

10/28/2016 7:26:35 AM X:\297 PORTSMOUTH NAVAL SHIPYARD\297.005.001 - DD#1 DEFUELING COMPLEX DESIGN\DRAWINGS\ACE3\SHEETS\A-001.DWG

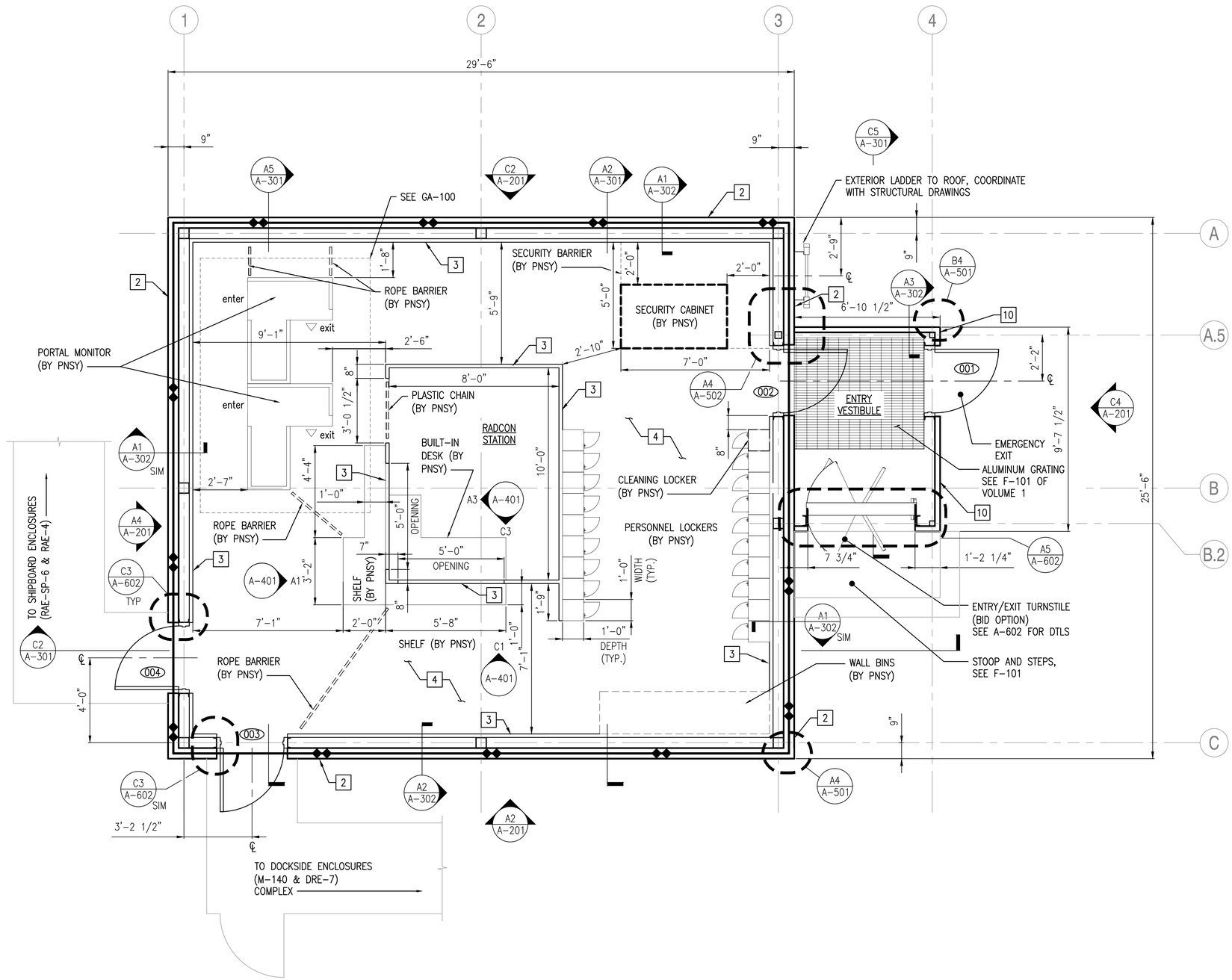

GROUND LEVEL

SCALE: 3/8"=1'

NOTES

1. SEE DRAWING A-001 FOR GENERAL NOTES, ABBREVIATIONS AND LEGEND.
2. SEE DRAWINGS A-601 FOR DOOR SCHEDULES AND DETAILS.
3. ITEMS WITH (BY PNSY) ARE NOT IN CONTRACT AND SHOWN FOR REFERENCE ONLY.

KEYED NOTES

1. 1/4" STEEL METAL PLATE ROOF WITH NON-SLIP PAINT, WITHIN RAILING EXTENTS
2. 6" INSULATED METAL PANEL, 2HR FIRE RATED
3. 2" INTERIOR STUDLESS WALL PANEL
4. EPOXY CONCRETE FLOORING
5. 1/4" STEEL PLATE ROOF, PTD
6. INSULATED METAL PANEL SEAM
7. 42" HIGH FIXED METAL RAILING, PTD
8. 24" WIDE SAFETY GATE, PTD.
9. 3/16" PTD STEEL PLATE BOLTED TO OPENING AFTER PORTAL MONITOR HAS BEEN INSTALLED. SEE STRUCTURAL DRAWINGS FOR MORE INFORMATION.
10. 3" INSULATED METAL PANEL

SYM	DESCRIPTION	DATE	APPR
0	ISSUED FOR CONSTRUCTION	10/28/2016	CBC

NAVFAC

REGISTERED ARCHITECT DONALD M. DYER No. 859 STATE OF MAINE 10/28/16

Colby Company engineering

A/E INFO

APPROVED David W. Krumfeld FOR COMMANDER NAVFAC

ACTIVITY: TIM FISHER C. 2370.6 BRANCH HEAD

SATISFACTORY TO DATE 10/28/2016

DES GJN | DRW GJN | CHK DMD

PMDM: PETER STOCKLESS

BRANCH MANAGER: IAN BODWELL

FEA/PM&E: AMIN BAHROUR

FIRE PROTECTION: PATRICK BAKAJ

DEPARTMENT OF THE NAVY
NAVAL FACILITIES ENGINEERING COMMAND ~ MID-ATLANTIC
PUBLIC WORKS DEPARTMENT - MAINE
NAVAL FACILITIES ENGINEERING COMMAND
NAVAL SHIPYARD - PORTSMOUTH, NH
PORTSMOUTH NAVAL SHIPYARD
KITTERY, ME
DRY DOCK #1 DEFUELING COMPLEX
ACE-3
GROUND LEVEL PLAN

EPROJECT NO.: 1363311

CONSTR. CONTR. NO. N40085-17-C-5002

NAVFAC DRAWING NO. 12735232

SHEET 15 OF 43

A-100 | DD1-16-1313

DRAWFORM REVISION: 10 OCTOBER 2014

Scale: 3/8" = 1'-0"

10/28/2016 7:26:40 AM X:\297 PORTSMOUTH NAVAL SHIPYARD\297.005.001 - DD#1 DEFUELING COMPLEX DESIGN\DRAWINGS\ACE3\SHEETS\A-100.DWG

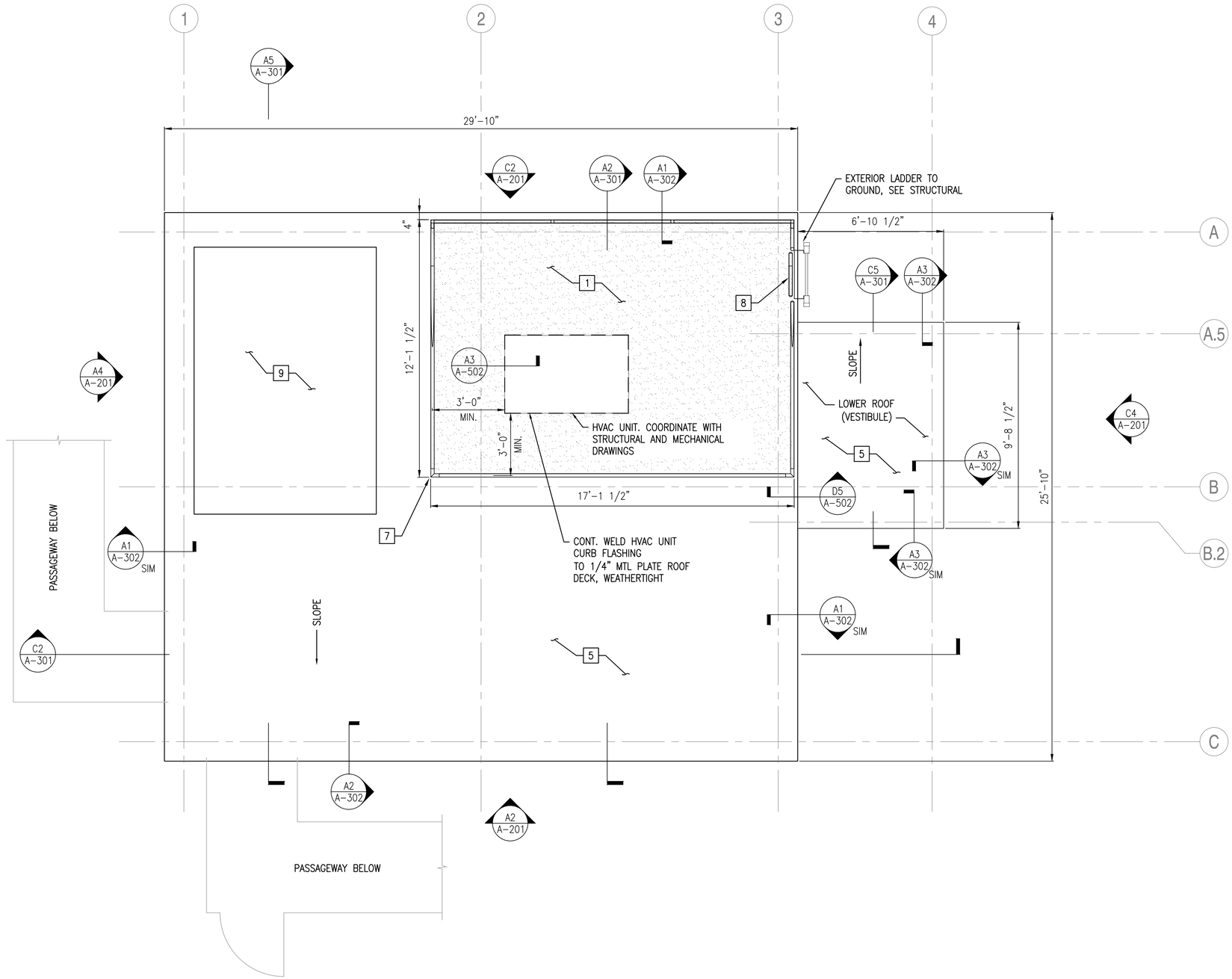

ROOF PLAN

SCALE: 3/8"=1'-0"

PLAN NORTH

NOTES

1. SEE DRAWING A-001 FOR GENERAL NOTES, ABBREVIATIONS AND LEGEND.
2. RAILINGS, LADDERS, AND GATES SHOWN FOR CONTEXT ONLY. FOR ACTUAL DIMENSIONS AND GEOMETRY SEE STRUCTURAL DETAIL DRAWINGS.

KEYED NOTES

1. 1/4" STEEL METAL PLATE ROOF WITH NON-SLIP PAINT, WITHIN RAILING EXTENTS
2. 6" INSULATED METAL PANEL, 2HR FIRE RATED
3. 2" INTERIOR STUDLESS WALL PANEL
4. EPOXY CONCRETE FLOORING
5. 1/4" STEEL PLATE ROOF, PTD
6. INSULATED METAL PANEL SEAM
7. 42" HIGH FIXED METAL RAILING, PTD
8. 24" WIDE SAFETY GATE, PTD.
9. 3/16" PTD STEEL PLATE BOLTED TO OPENING AFTER PORTAL MONITOR HAS BEEN INSTALLED. SEE STRUCTURAL DRAWINGS FOR MORE INFORMATION.
10. 3" INSULATED METAL PANEL

SYM	DESCRIPTION	DATE	APPR
0	ISSUED FOR CONSTRUCTION	10/28/2016	CBC

NAVFAC

REGISTERED ARCHITECT DONALD M. DYER No. 859 STATE OF MAINE 10/28/16

Colby Company engineering

A/E INFO

APPROVED FOR COMMANDER NAVFAC: David W. Grunfeld

ACTIVITY: TIM FISHER C. 2370.6 BRANCH HEAD

SATISFACTORY TO DATE 10/28/2016

DES GJN | DRW GJN | CHK DMD

PM/DM PETER STOCKLESS

BRANCH MANAGER IAN BODWELL

FEAD/PM&E AMIN BAHROUR

FIRE PROTECTION PATRICK BAKAJ

DEPARTMENT OF THE NAVY
NAVAL FACILITIES ENGINEERING COMMAND
PUBLIC WORKS DEPARTMENT - MAINE

NAVAL FACILITIES ENGINEERING COMMAND ~ MID-ATLANTIC
NAVAL SHIPYARD - PORTSMOUTH NH

PORTSMOUTH NAVAL SHIPYARD
KITTERY, ME

DRY DOCK #1 DEFUELING COMPLEX
ACE-3

ROOF PLAN

EPROJECT NO.: 1363311

CONSTR. CONTR. NO. N40085-17-C-5002

NAVFAC DRAWING NO. 12735233

SHEET 16 OF 43

A-101 | DD1-16-1314

Scale: 3/8" = 1'-0"

DRAWFORM REVISION: 10 OCTOBER 2014

10/28/2016 7:26:45 AM X:\297 PORTSMOUTH NAVAL SHIPYARD\297.005.001 - DD#1 DEFUELING COMPLEX DESIGN\DRAWINGS\ACE3\SHEETS\A-101.DWG

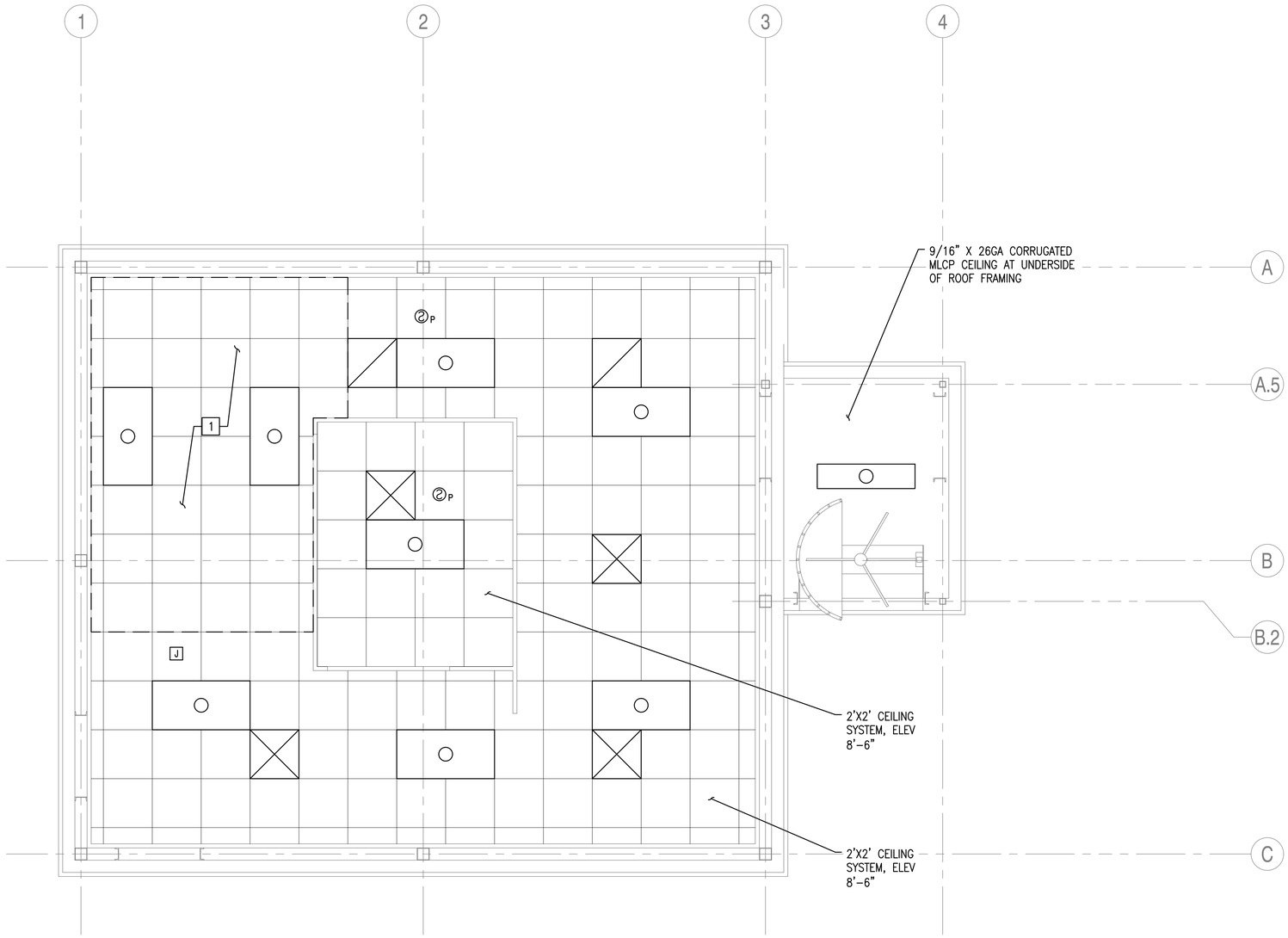

NOTES

1. SEE DRAWING A-001 FOR GENERAL NOTES, ABBREVIATIONS AND LEGEND.
2. RAILINGS, LADDERS, AND GATES SHOWN FOR CONTEXT ONLY. FOR ACTUAL DIMENSIONS AND GEOMETRY SEE STRUCTURAL DETAIL DRAWINGS.
3. COORDINATE WITH ELECTRICAL AND MECHANICAL FOR FIXTURE AND GRILLE LOCATIONS.

CEILING KEYED NOTES

1 AREA WITHIN CEILING PLANE THAT CAN BE REMOVED AND REINSTALLED INDEPENDENT OF REST OF CEILING SYSTEM. AREA ABOVE CEILING AT THIS LOCATION MUST ALSO BE DEVOID OF ANY DUCTWORK, CONDUIT, PERMANENT STRUCTURAL MEMBERS OR ANY OTHER ITEM THAT WOULD INTERFERE WITH INSTALLATION AND/OR REMOVAL OF PORTAL MONITORS AT GROUND LEVEL, THROUGH DEDICATED OPENING IN ROOF ABOVE.

LEGEND

- RETURN
- SUPPLY
- 2X4 FLUORESCENT FIXTURE
- FLUORESCENT WRAP AROUND FIXTURE
- J JUNCTION BOX, SEE EP-100
- P SMOKE DETECTOR

GROUND LEVEL REFLECTED CEILING PLAN

SCALE: 3/8"=1'

PLAN NORTH

Scale: 3/8" = 1'-0"

SYM	DESCRIPTION	DATE	APPR
0	ISSUED FOR CONSTRUCTION	10/28/2016	CBC

REGISTERED ARCHITECT DONALD M. DYER No. 859 STATE OF MAINE 10/28/16

Colby Company engineering

APPROVED David W. Grunfeld FOR COMMANDER NAVFAC

ACTIVITY TIM FISHER C. 2370.6 BRANCH HEAD

SATISFACTORY TO DATE 10/28/2016

DES GJN DRW GJN CHK DMD

PMDM PETER STOCKLESS

BRANCH MANAGER IAN BODWELL

FEA/PM&E AMIN BAHROUR

FIRE PROTECTION PATRICK BAKAJ

DEPARTMENT OF THE NAVY
NAVAL FACILITIES ENGINEERING COMMAND
PUBLIC WORKS DEPARTMENT - MAINE

NAVAL FACILITIES ENGINEERING COMMAND ~ MID-ATLANTIC
NAVAL SHIPYARD - PORTSMOUTH, NH

PORTSMOUTH NAVAL SHIPYARD
DRY DOCK #1 DEFUELING COMPLEX
ACE-3

KITTERY, ME

REFLECTED CEILING PLAN

EPROJECT NO.: 1363311

CONSTR. CONTR. NO. N40085-17-C-5002

NAVFAC DRAWING NO. 12735234

SHEET 17 OF 43

A-102 DD1-16-1315

DRAWFORM REVISION: 10 OCTOBER 2014

10/28/2016 7:26:49 AM X:\297 PORTSMOUTH NAVAL SHIPYARD\297.005.001 - DD#1 DEFUELING COMPLEX DESIGN\DRAWINGS\ACE3\SHEETS\A-102.DWG

KEYED NOTES

1. 1/4" STEEL METAL PLATE ROOF WITH NON-SLIP PAINT, WITHIN RAILING EXTENTS
2. 6" INSULATED METAL PANEL, 2HR FIRE RATED
3. 2" INTERIOR STUDLESS WALL PANEL
4. EPOXY CONCRETE FLOORING
5. 1/4" STEEL PLATE ROOF, PTD
6. INSULATED METAL PANEL SEAM
7. 42" HIGH FIXED METAL RAILING, PTD
8. 24" WIDE SAFETY GATE, PTD.
9. 3/16" PTD STEEL PLATE BOLTED TO OPENING AFTER PORTAL MONITOR HAS BEEN INSTALLED. SEE STRUCTURAL DRAWINGS FOR MORE INFORMATION.
10. 3" INSULATED METAL PANEL

NOTES

1. SEE DRAWING A-001 FOR GENERAL NOTES, ABBREVIATIONS AND LEGEND.
2. RAILINGS, LADDERS AND GATES SHOWN FOR CONTEXT ONLY. FOR ACTUAL DIMENSIONS AND GEOMETRY SEE STRUCTURAL DETAIL DRAWINGS.
3. REFER TO A-601 FOR PAINT SCHEDULE.

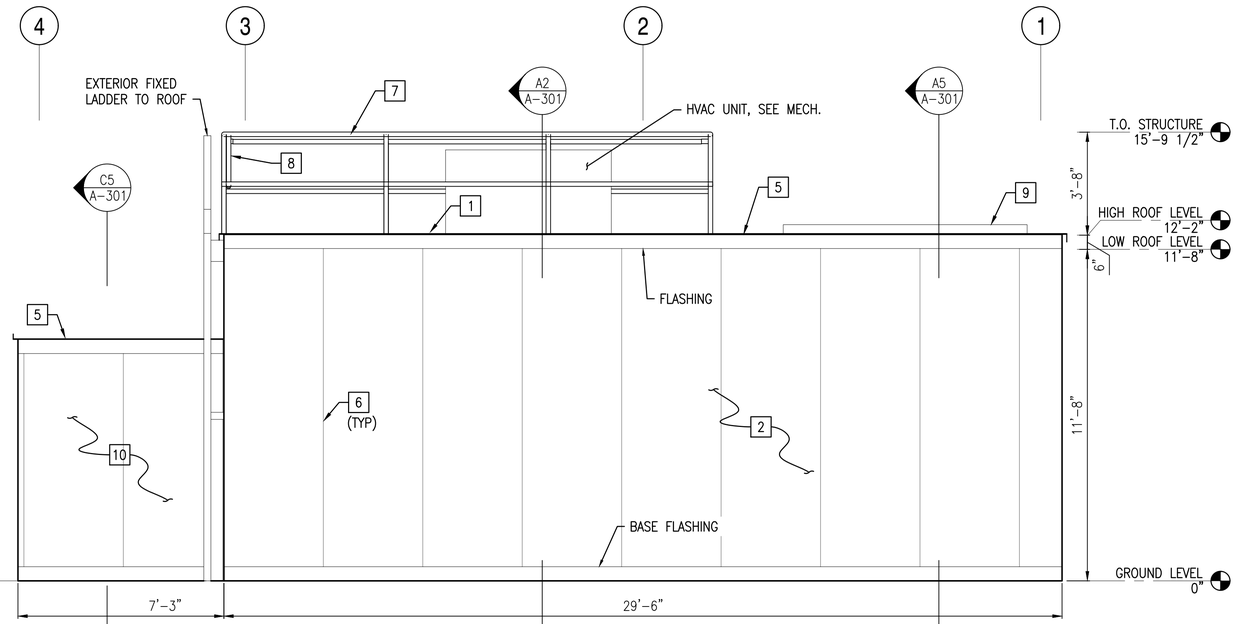

NORTH ELEVATION

SCALE: 3/8" = 1'-0"

A-100, A-101 (C2)

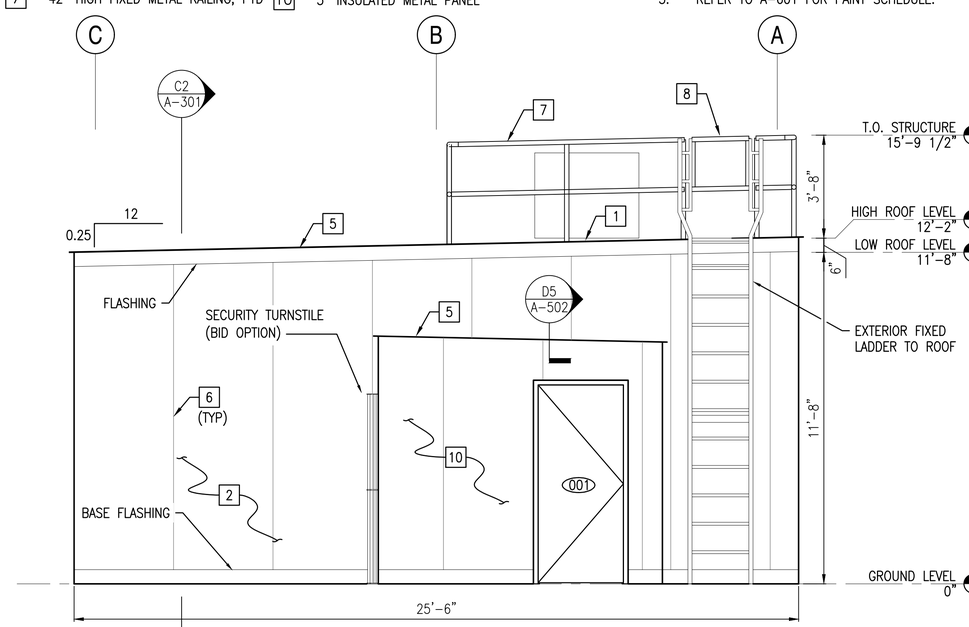

EAST ELEVATION

SCALE: 3/8" = 1'-0"

A-100, A-101 (C4)

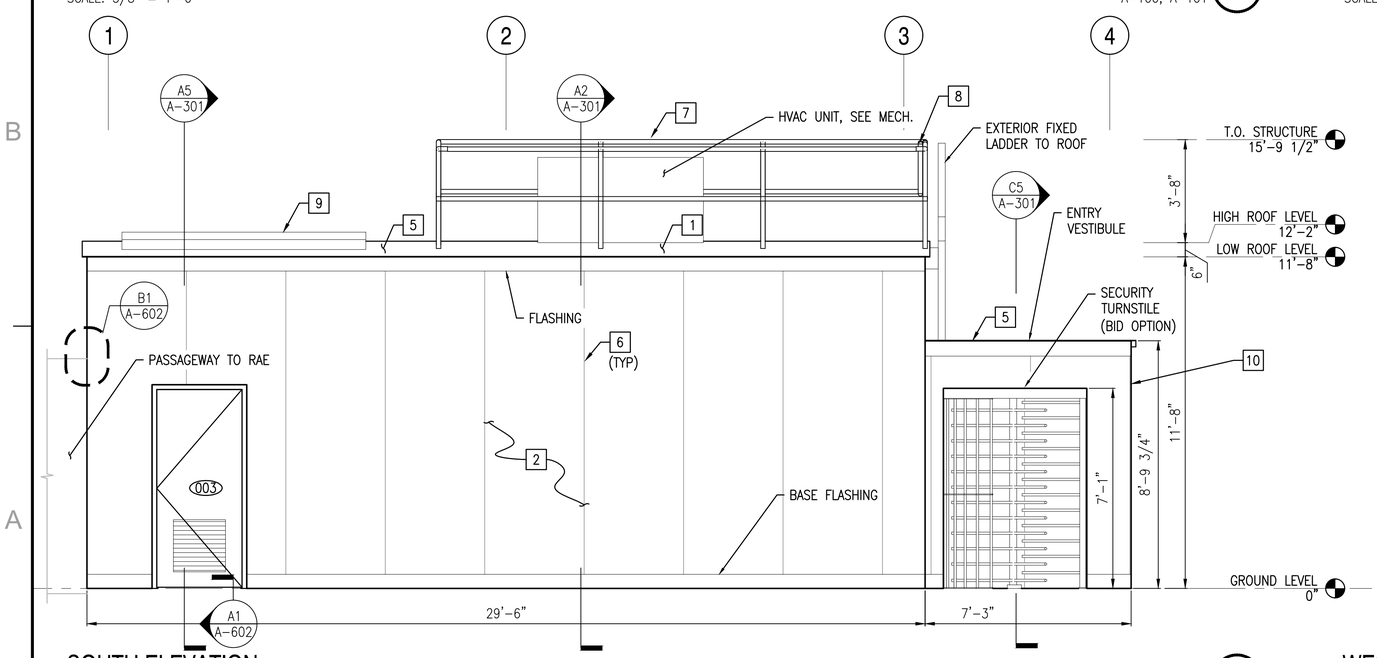

SOUTH ELEVATION

SCALE: 3/8" = 1'-0"

A-100, A-101 (A2)

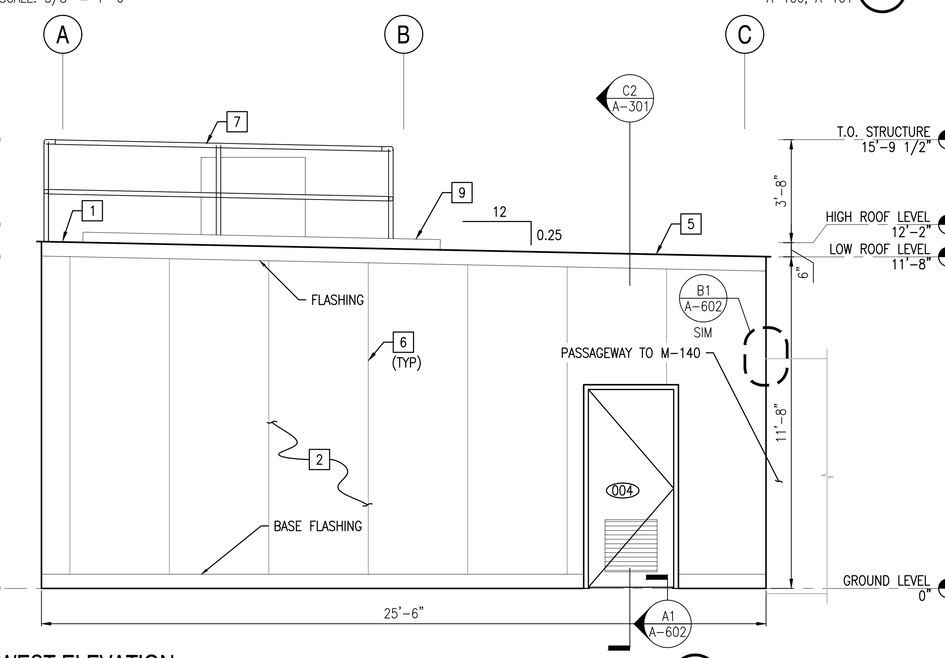

WEST ELEVATION

SCALE: 3/8" = 1'-0"

A-100, A-101 (A4)

0 2' 4' 6'
Scale: 3/8" = 1'-0"

SYM	DESCRIPTION	DATE	APPR
0	ISSUED FOR CONSTRUCTION	10/28/2016	CBC

NAVFAC

REGISTERED ARCHITECT DONALD M. DYER No. 859 STATE OF MAINE 10/28/16

Colby Company engineering

A/E INFO

APPROVED David W. Krumfield
FOR COMMANDER NAVFAC

ACTIVITY: TIM FISHER C. 2370.6 BRANCH HEAD

SATISFACTORY TO DATE 10/28/2016

DES GJN | DRW GJN | CHK DMD

PMDM: PETER STOCKLESS

BRANCH MANAGER: IAN BODWELL

FEA/PM&E: AMIN BAHROUR

FIRE PROTECTION: PATRICK BAKAJ

DEPARTMENT OF THE NAVY
NAVAL FACILITIES ENGINEERING COMMAND
PUBLIC WORKS DEPARTMENT - MAINE

NAVAL FACILITIES ENGINEERING COMMAND ~ MID-ATLANTIC
NAVAL SHIPYARD - PORTSMOUTH, NH

KITTERY, ME

PORTSMOUTH NAVAL SHIPYARD
DRY DOCK #1 DEFUELING COMPLEX
ACE-3

ACE BUILDING ELEVATIONS

EPROJECT NO.: 1363311

CONSTR. CONTR. NO. N40085-17-C-5002

NAVFAC DRAWING NO. 12735235

SHEET 18 OF 43

A-201 | DD1-16-1316

DRAWFORM REVISION: 10 OCTOBER 2014

10/28/2016 7:26:54 AM X:\297 PORTSMOUTH NAVAL SHIPYARD\297.005.001 - DD#1 DEFUELING COMPLEX DESIGN\DRAWINGS\ACE3\SHEETS\A-201.DWG

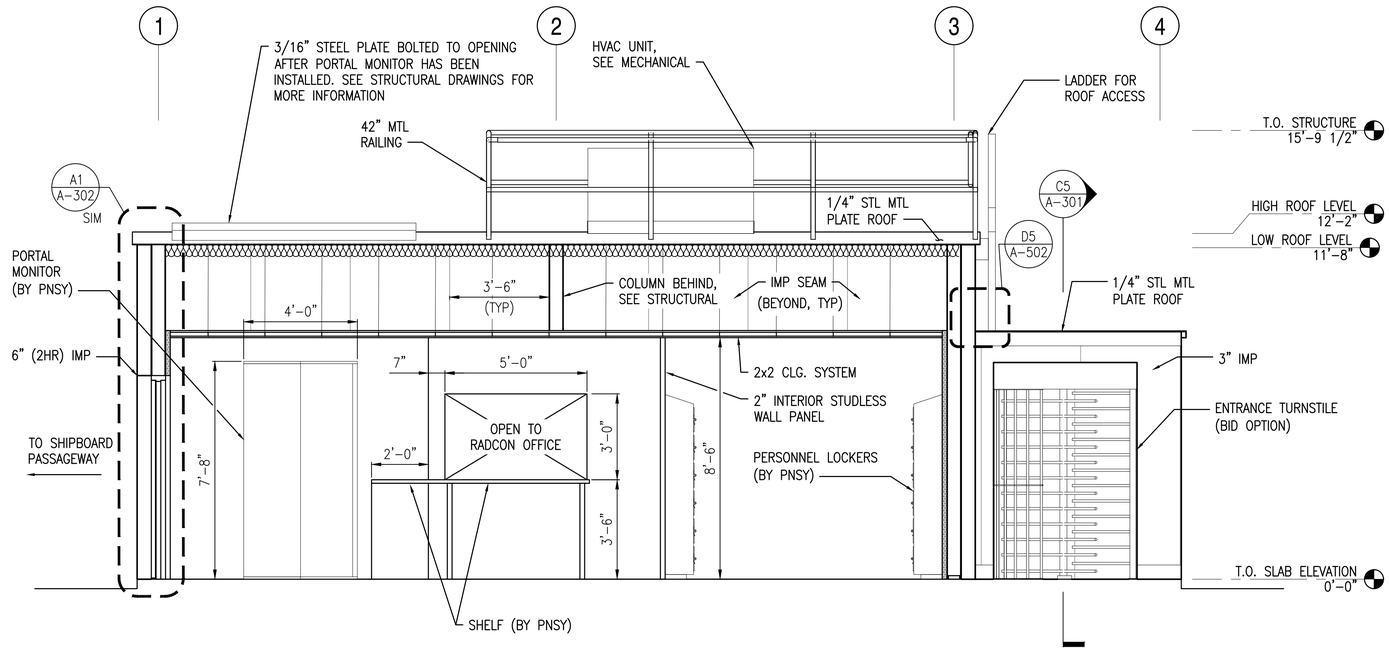

BUILDING SECTION

SCALE: 3/8" = 1'-0"

A-100, A-101, A-201 (C2)

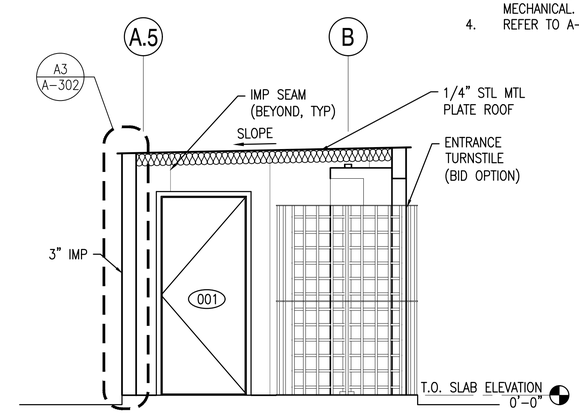

BUILDING SECTION

SCALE: 3/8" = 1'-0"

A-100, A-101, A-201, A-301 (C5)

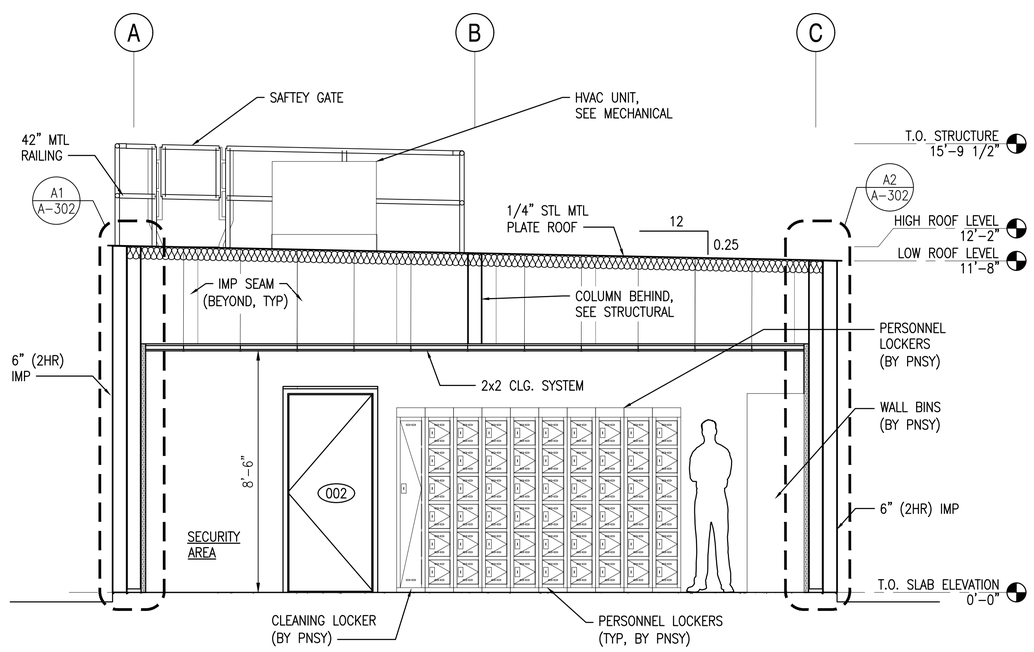

BUILDING SECTION

SCALE: 3/8" = 1'-0"

A-100, A-101, A-201 (A2)

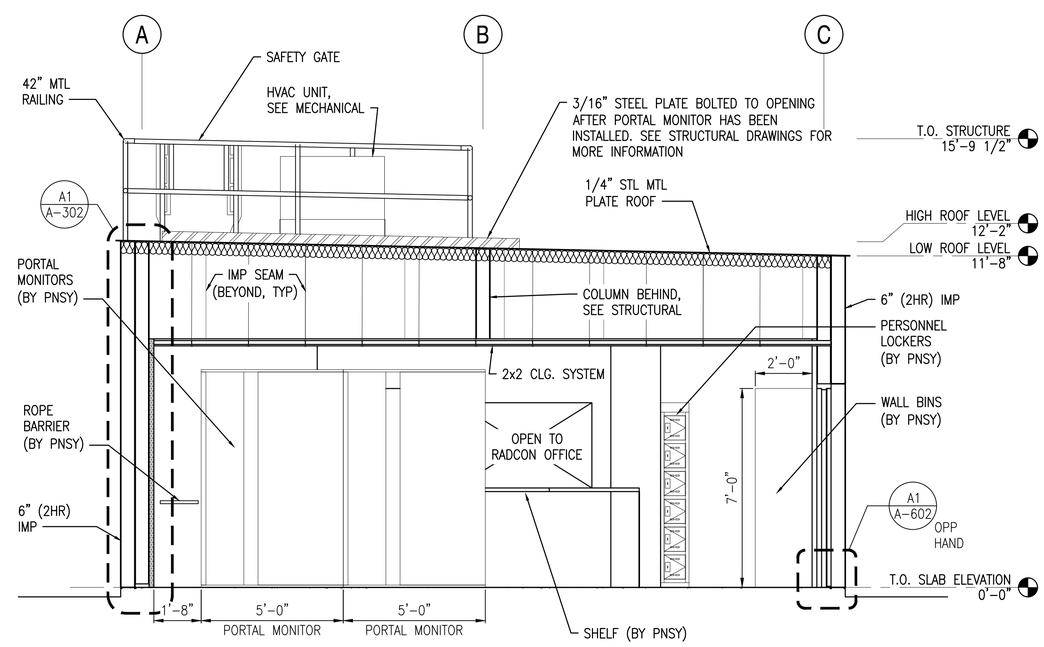

BUILDING SECTION

SCALE 3/8"=1'-0"

A-100, A-101, A-201 (A5)

0 2' 4' 6'
Scale: 3/8" = 1'-0"

NOTES

1. SEE DRAWING A-001 FOR GENERAL NOTES, ABBREVIATIONS AND LEGEND.
2. RAILINGS, LADDERS AND GATES SHOWN FOR CONTEXT ONLY. FOR ACTUAL DIMENSIONS AND GEOMETRY SEE STRUCTURAL DETAIL DRAWINGS.
3. ENSURE THAT NO STRUCTURE OR DUCTWORK LIES BELOW 8'-4"x12'-4" PLATE ON ROOF. COORDINATE WITH STRUCTURAL AND MECHANICAL.
4. REFER TO A-601 FOR PAINT SCHEDULE.

SYM	DESCRIPTION	DATE	APPR
0	ISSUED FOR CONSTRUCTION	10/28/2016	CBC

NAVFAC

REGISTERED ARCHITECT DONALD M. DYER No. 859 STATE OF MAINE
10/28/16

Colby Company engineering

A/E INFO

APPROVED David W. Krumfield
FOR COMMANDER NAVFAC

ACTIVITY: TIM FISHER C. 2370.6 BRANCH HEAD

SATISFACTORY TO: DATE 10/28/2016

DES GJN | DRW GJN | CHK DMD

PMDM: PETER STOCKLESS

BRANCH MANAGER: IAN BODWELL

FEAD/PM&E: AMIN BAHROUR

FIRE PROTECTION: PATRICK BAKAJ

DEPARTMENT OF THE NAVY
NAVAL FACILITIES ENGINEERING COMMAND
PUBLIC WORKS DEPARTMENT - MAINE

NAVAL FACILITIES ENGINEERING COMMAND ~ MID-ATLANTIC
NAVAL SHIPYARD - PORTSMOUTH, NH

PORTSMOUTH NAVAL SHIPYARD
KITTERY, ME

DRY DOCK #1 DEFUELING COMPLEX
ACE-3

ACE BUILDING SECTIONS

EPROJECT NO.: 1363311

CONSTR. CONTR. NO. N40085-17-C-5002

NAVFAC DRAWING NO. 12735236

SHEET 19 OF 43

A-301 | DD1-16-1317

DRAWFORM REVISION: 10 OCTOBER 2014

10/28/2016 7:27:01 AM X:\297 PORTSMOUTH NAVAL SHIPYARD\297.005.001 - DD#1 DEFUELING COMPLEX DESIGN\DRAWINGS\ACE3\SHEETS\A-301.DWG

NOTES

1. SEE DRAWING A-001 FOR GENERAL NOTES, ABBREVIATIONS AND LEGEND.
2. RAILINGS, LADDERS AND GATES SHOWN FOR CONTEXT ONLY. FOR ACTUAL DIMENSIONS AND GEOMETRY SEE STRUCTURAL DETAIL DRAWINGS.
3. REFER TO A-601 FOR PAINT SCHEDULE.

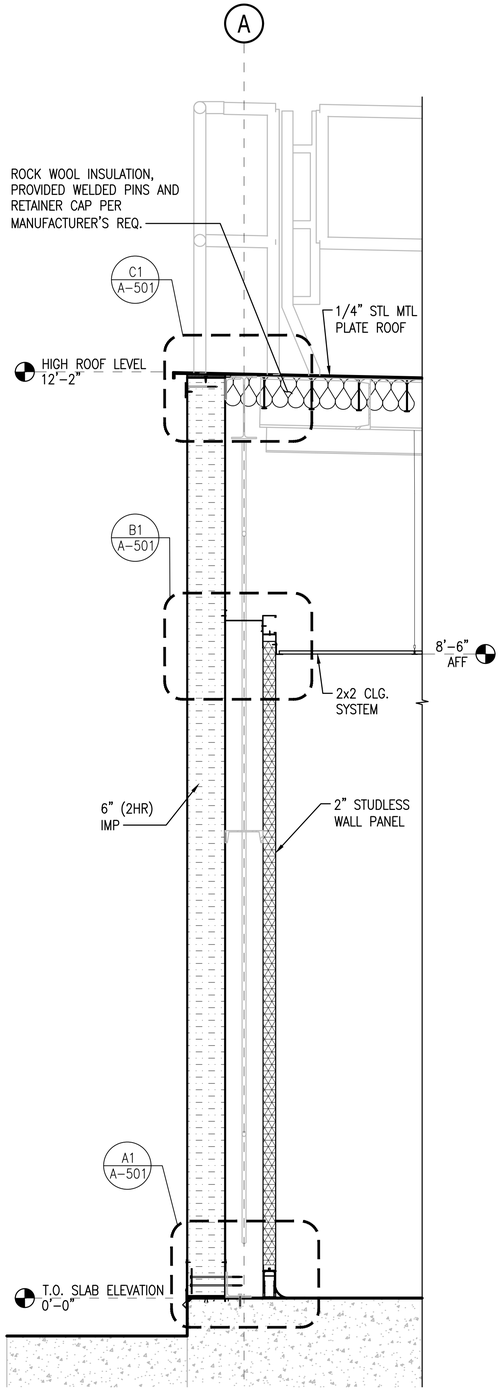

TYPICAL 6" (2HR) IMP WALL

SCALE: 1"=1'-0" A-100, A-101, A-301 (A1)

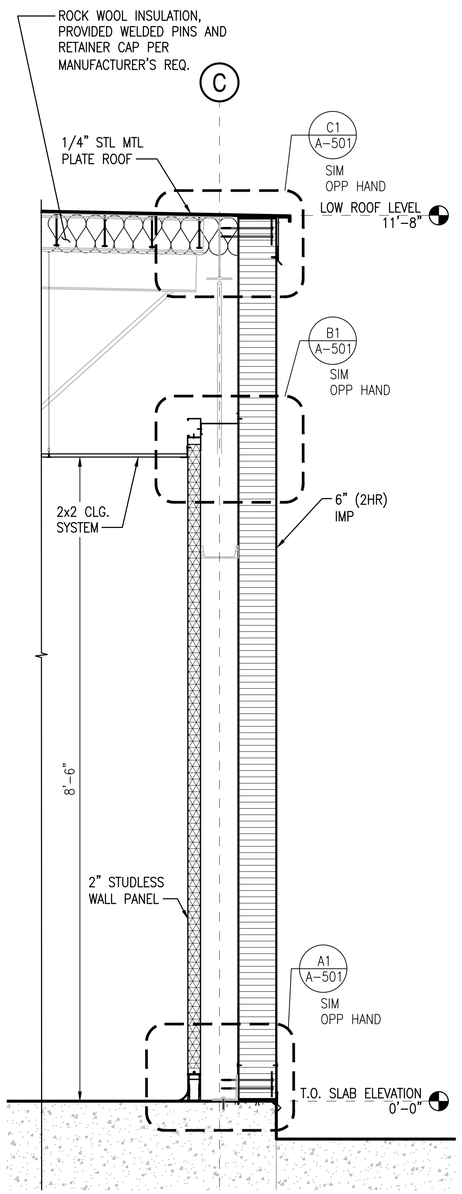

TYPICAL 6" (2HR) IMP WALL

SCALE: 1"=1'-0" A-100, A-101, A-301 (A2)

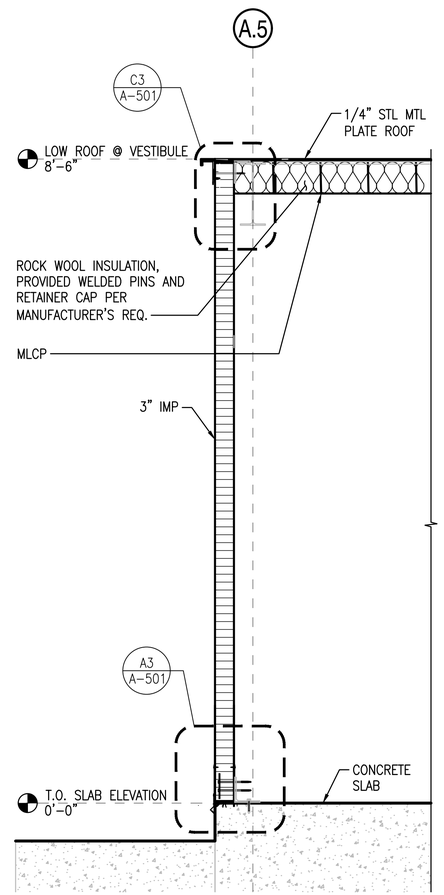

TYPICAL 3" IMP WALL @ VESTIBULE

SCALE: 1"=1'-0" A-100, A-101, A-301 (A3)

0 1/2' 1' 2'
Scale: 1" = 1'-0"

SYM	DESCRIPTION	DATE	APPR
0	ISSUED FOR CONSTRUCTION	10/28/2016	CBC

NAVFAC

REGISTERED ARCHITECT DONALD M. DYER No. 859 STATE OF MAINE
10/28/16

Colby Company engineering

A/E INFO

APPROVED David W. Krumfield
FOR COMMANDER NAVFAC

ACTIVITY
TIM FISHER
C. 2370.6 BRANCH HEAD

SATISFACTORY TO DATE 10/28/2016

DES GJN | DRW GJN | CHK DMD

PMDM PETER STOCKLESS
BRANCH MANAGER IAN BODWELL
FEA/DPM&E AMIN BAHROUR
FIRE PROTECTION PATRICK BAKAJ

DEPARTMENT OF THE NAVY
NAVAL FACILITIES ENGINEERING COMMAND ~ MID-ATLANTIC
PUBLIC WORKS DEPARTMENT - MAINE
NAVAL FACILITIES ENGINEERING COMMAND
NAVAL SHIPYARD - PORTSMOUTH, NH
PORTSMOUTH NAVAL SHIPYARD
KITTERY, ME
DRY DOCK #1 DEFUELING COMPLEX
ACE-3
WALL SECTIONS

EPROJECT NO.: 1363311
CONSTR. CONTR. NO. N40085-17-C-5002
NAVFAC DRAWING NO. 12735237
SHEET 20 OF 43

A-302 | DD1-16-1318

DRAWFORM REVISION: 10 OCTOBER 2014

10/28/2016 7:27:07 AM X:\297 PORTSMOUTH NAVAL SHIPYARD\297.005.001 - DDH DEFUELING COMPLEX DESIGN\DRAWINGS\ACE3\SHEETS\A-302.DWG

NOTES

1. SEE DRAWING A-001 FOR GENERAL NOTES, ABBREVIATIONS AND LEGEND.

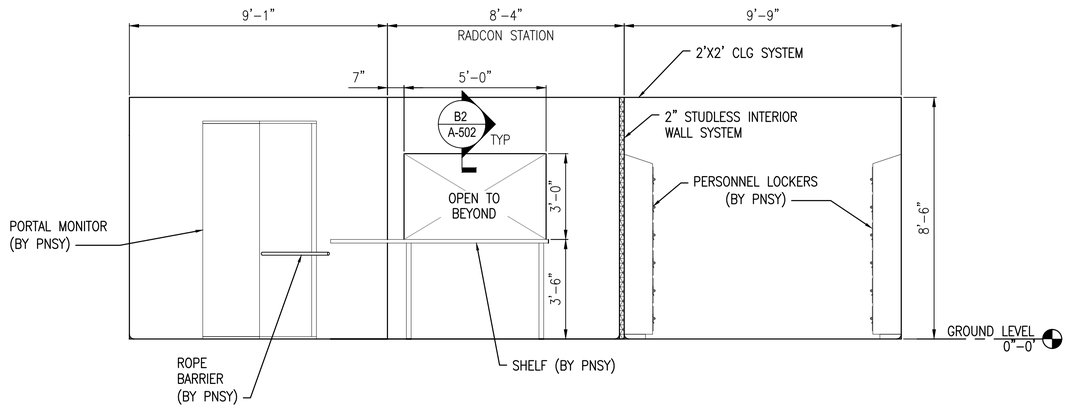

NORTH INTERIOR ELEVATION

SCALE: 3/8" = 1'-0"

A-100 C1

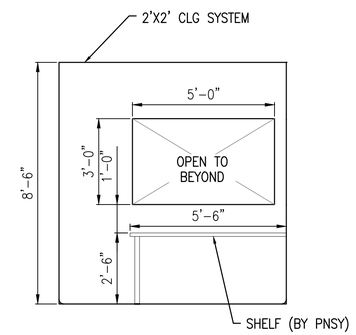

SOUTH INTERIOR ELEVATION

SCALE: 3/8" = 1'-0"

A-100 C3

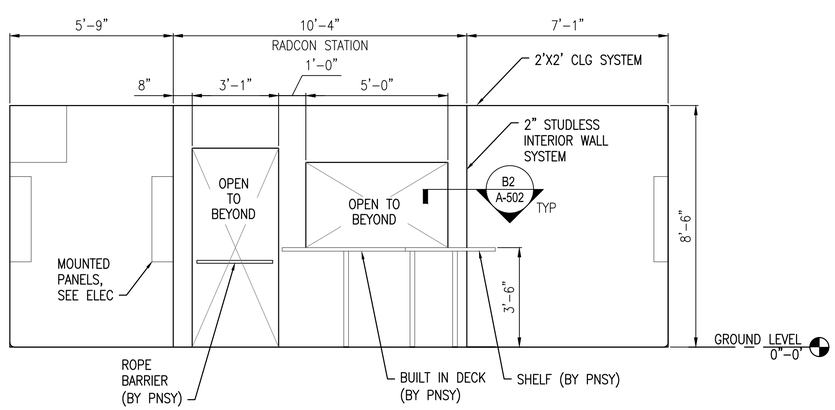

EAST INTERIOR ELEVATION

SCALE: 3/8" = 1'-0"

A-100 A1

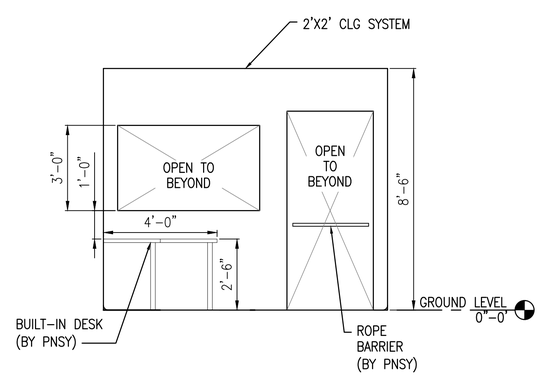

EAST INTERIOR ELEVATION

SCALE: 3/8" = 1'-0"

A-100 A3

0 2' 4' 6'
Scale: 3/8" = 1'-0"

SYM	DESCRIPTION	DATE	APPR
0	ISSUED FOR CONSTRUCTION	10/28/2016	CBC

NAVFAC

REGISTERED ARCHITECT DONALD M. DYER No. 859 STATE OF MAINE
10/28/16

Colby Company engineering

A/E INFO

APPROVED David W. Krumfield
FOR COMMANDER NAVFAC

ACTIVITY: TIM FISHER C. 2370.6 BRANCH HEAD

SATISFACTORY TO DATE 10/28/2016

DES GJN DRW GJN CHK DMD

PM/DM PETER STOCKLESS

BRANCH MANAGER IAN BODWELL

FEAD/PM&E AMIN BAHROUR

FIRE PROTECTION PATRICK BAKAJ

DEPARTMENT OF THE NAVY
NAVAL FACILITIES ENGINEERING COMMAND
PUBLIC WORKS DEPARTMENT - MAINE

NAVAL FACILITIES ENGINEERING COMMAND ~ MID-ATLANTIC
NAVAL SHIPYARD - PORTSMOUTH, NH

PORTSMOUTH NAVAL SHIPYARD
KITTERY, ME

DRY DOCK #1 DEFUELING COMPLEX
ACE-3

INTERIOR ELEVATIONS

EPROJECT NO.: 1363311

CONSTR. CONTR. NO. N40085-17-C-5002

NAVFAC DRAWING NO. 12735238

SHEET 21 OF 43

A-401 DD1-16-1319

DRAWFORM REVISION: 10 OCTOBER 2014

10/28/2016 7:27:11 AM X:\297 PORTSMOUTH NAVAL SHIPYARD\297.005.001 - DD#1 DEFUELING COMPLEX DESIGN\DRAWINGS\ACE3\SHEETS\A-401.DWG

DESIGN INTENT NOTES

PROVIDE SEALED PERIMETER TO INTERIOR AND EXTERIOR OF BUILDING TO WORK IN CONJUNCTION WITH HVAC SYSTEM TO MAINTAIN NEGATIVE AIR PRESSURE AS WELL AS SEAL OUT AIR AND WATER INFILTRATION.

NOTES

1. SEE DRAWING A-001 FOR GENERAL NOTES, ABBREVIATIONS AND LEGEND.
2. FOR RAILING DETAILS, SEE STRUCTURAL DRAWINGS.
3. ALL ROOF EDGES TO OVERHANG 2" + THICKNESS OF MTL. PLATE ROOF AND BEND DOWN 1". THIS IS TO PREVENT WATER PENETRATION THROUGH THE TOP OF PANEL FLASHING AND PROTECT UPPER FASTENING LOCATION FROM WEATHER INFILTRATION.
4. UNLESS STATED OTHERWISE, FASTENER AND POP RIVET SPACING PER MANUFACTURER'S STANDARD REQUIREMENTS.

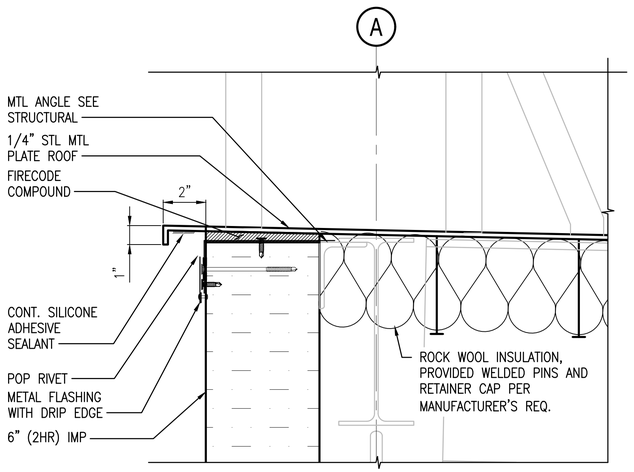

6" (2HR) IMP ROOF CONNECTION (C1)

SCALE: 3"=1'-0" A-302

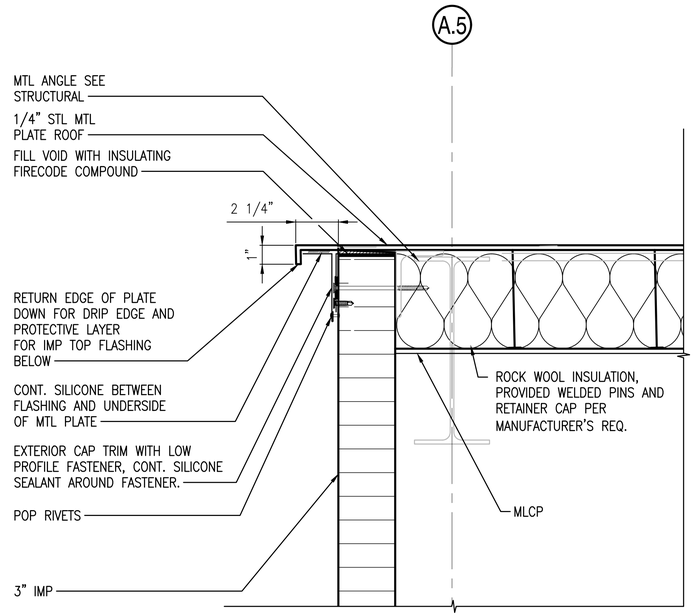

3" IMP ROOF CONNECTION @ VESTIBULE (C3)

SCALE: 3"=1'-0" A-302

DETAIL NOTE:
THE METAL PLATE ROOF DRIP EDGE AND IMP FLASHING AS SHOWN IN THIS DETAIL TO BE "TYPICAL" FLASHING CONDITION FOR ALL METAL PLATE ROOF TO IMP WALL CONDITIONS THROUGHOUT VOL. 2.

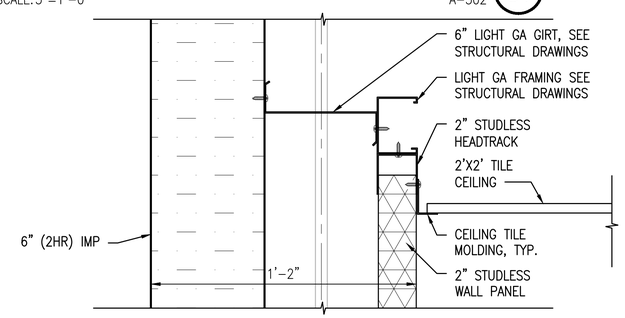

6" (2HR) IMP MID-WALL SECTION (B1)

SCALE: 3"=1'-0" A-302

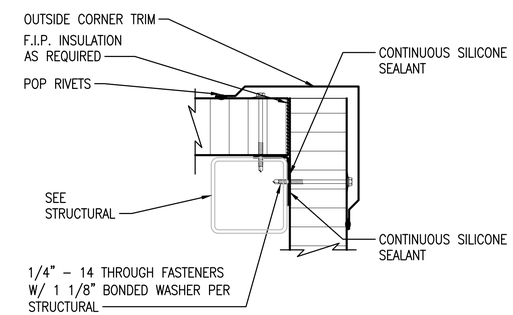

3" IMP CORNER PLAN SECTION, TYP (B4)

SCALE: 3"=1'-0" A-100

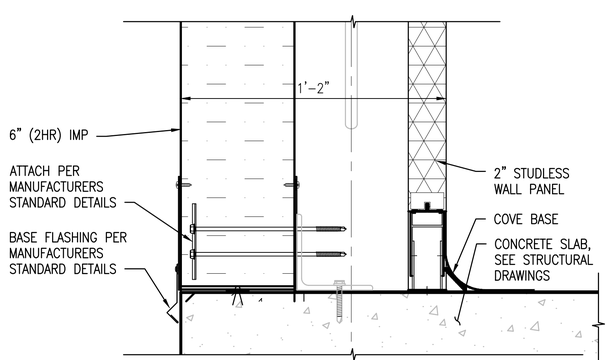

6" (2HR) IMP BASE (A1)

SCALE: 3"=1'-0" A-302

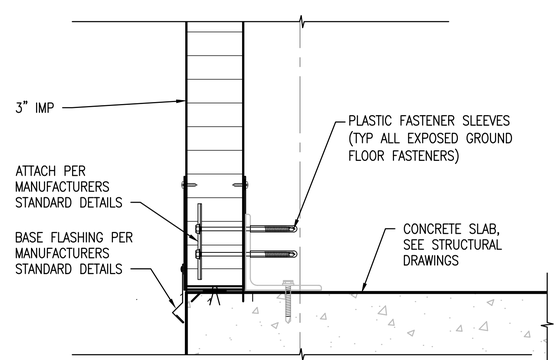

3" IMP BASE @ VESTIBULE (A3)

SCALE: 3"=1'-0" A-302

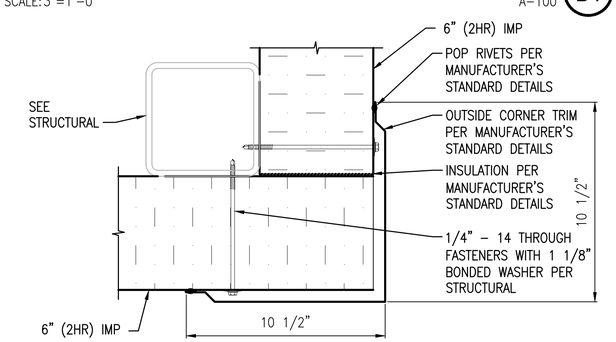

6" (2 HR FIRE RATED) IMP CORNER, TYP (A4)

SCALE: 3"=1'-0" A-100, A-602

Scale: 6" = 1'-0" (0, 6", 12", 18")

Scale: 3" = 1'-0" (0, 3", 6", 9")

SYM	DESCRIPTION	DATE	APPR
0	ISSUED FOR CONSTRUCTION	10/28/2016	CBC

NAVFAC

REGISTERED ARCHITECT DONALD M. DYER No. 859 STATE OF MAINE 10/28/16

Colby Company engineering

A/E INFO

APPROVED David W. Krumfield FOR COMMANDER NAVFAC

ACTIVITY: TIM FISHER C. 2370.6 BRANCH HEAD

SATISFACTORY TO DATE 10/28/2016

DES GJN DRW GJN CHK DMD

PMDM PETER STOCKLESS

BRANCH MANAGER IAN BODWELL

FEA/PM&E AMIN BAHROUR

FIRE PROTECTION PATRICK BAKAJ

DEPARTMENT OF THE NAVY
NAVAL FACILITIES ENGINEERING COMMAND
PUBLIC WORKS DEPARTMENT - MAINE

NAVAL FACILITIES ENGINEERING COMMAND ~ MID-ATLANTIC
NAVAL SHIPYARD - PORTSMOUTH, NH

PORTSMOUTH NAVAL SHIPYARD
DRY DOCK #1 DEFUELING COMPLEX
ACE-3

KITTERY, ME

ARCHITECTURAL DETAILS

EPROJECT NO.: 1363311

CONSTR. CONTR. NO. N40085-17-C-5002

NAVFAC DRAWING NO. 12735239

SHEET 22 OF 43

A-501 | DD1-16-1320

DRAWFORM REVISION: 10 OCTOBER 2014

10/28/2016 7:27:26 AM X:\297 PORTSMOUTH NAVAL SHIPYARD\297.005.001 - DD#1 DEFUELING COMPLEX DESIGN\DRAWINGS\ACE3\SHEETS\A-501.DWG

NOTES

1. SEE DRAWING A-001 FOR GENERAL NOTES, ABBREVIATIONS AND LEGEND.
2. FOR GUARDRAIL DETAILS, SEE STRUCTURAL DRAWINGS.
3. ALL ROOF EDGES TO OVERHANG 2" + THICKNESS OF MTL. PLATE ROOF AND BEND DOWN 1". THIS IS TO PREVENT WATER PENETRATION THROUGH THE TOP OF PANEL FLASHING AND PROTECT UPPER FASTENING LOCATION FROM WEATHER INFILTRATION.
4. UNLESS STATED OTHERWISE, FASTENER AND POP RIVET SPACING PER MANUFACTURER'S STANDARD REQUIREMENTS.

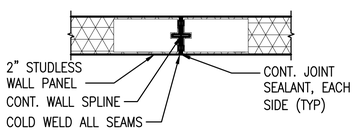

TYP. VERTICAL SEAM DETAIL (C1)
SCALE: 3"=1'-0"

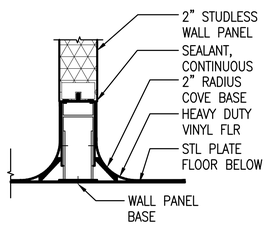

TYP. WALL BASE DTL (BOTH SIDES) (C2)
SCALE: 3"=1'-0"

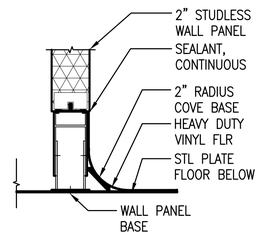

TYP. WALL BASE DTL (ONE SIDE) (C3)
SCALE: 3"=1'-0"

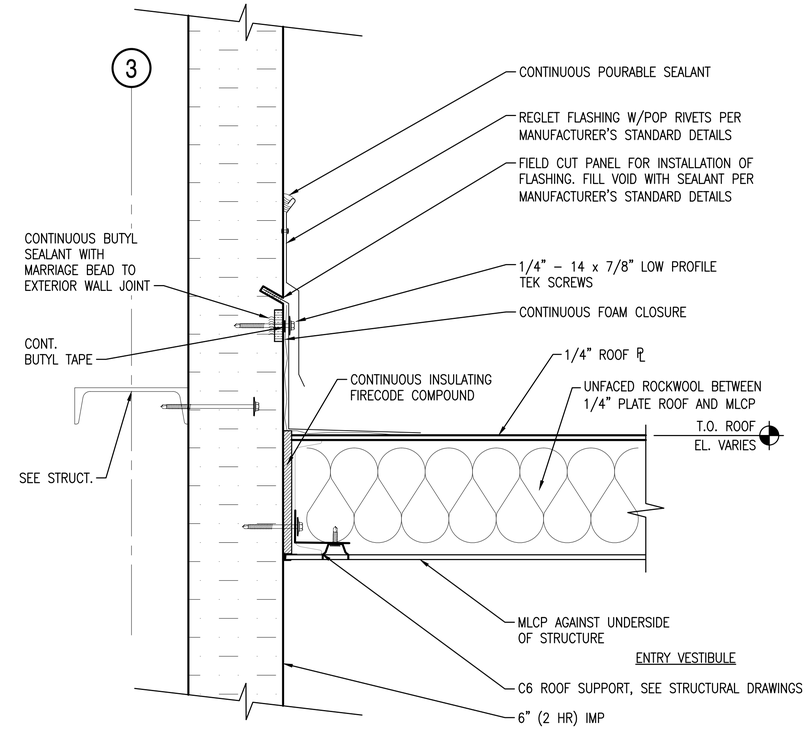

DETAIL AT LOW ROOF TO WALL (D5)
SCALE: 3"=1'-0"
A-101, A-201, A-301, S-502

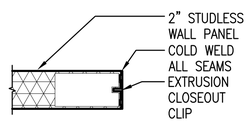

TYP. UTILITY CHASE WALL END DTL (B1)
SCALE: 3"=1'-0"

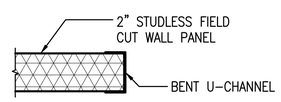

TYP. FIELD CUT WALL EDGE DETAIL (B2)
SCALE: 3"=1'-0"
A-401

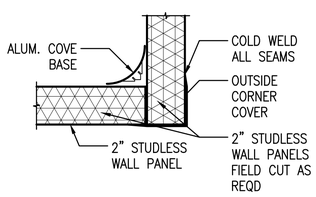

TYP. WALL INSIDE CORNER DETAIL (A1)
SCALE: 3"=1'-0"

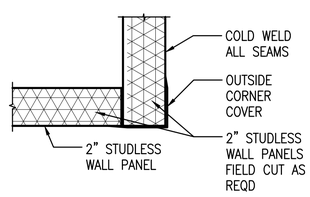

TYP. WALL OUTSIDE CORNER DETAIL (A2)
SCALE: 3"=1'-0"

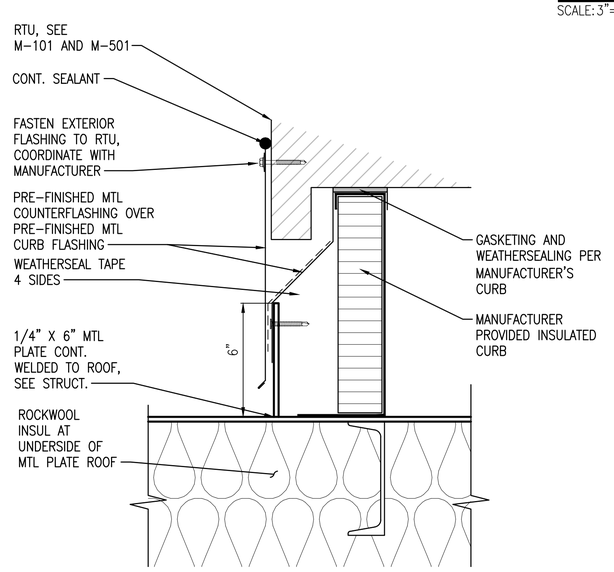

TYP ROOF CURB (A3)
SCALE: 1-1/2"=1'-0"
A-101

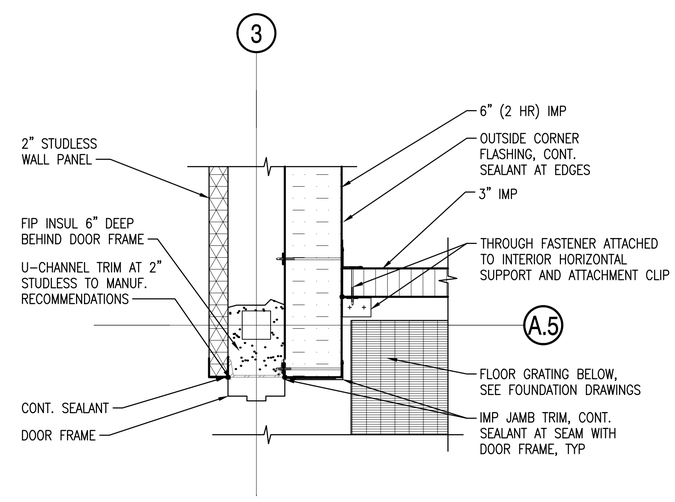

PLAN DETAIL ENTRY VESTIBULE TO ACE MAIN (A4)
SCALE: 1-1/2"=1'-0"
A-100, A-601

0 1/2' 1' 1 1/2'
Scale: 1 1/2" = 1'-0"
0 3" 6" 9"
Scale: 3" = 1'-0"

SYM	DESCRIPTION	DATE	APPR
0	ISSUED FOR CONSTRUCTION	10/28/2016	CBC

NAVFAC

REGISTERED ARCHITECT DONALD M. DYER No. 859 STATE OF MAINE
10/28/16

Colby Company engineering
A/E INFO

APPROVED David W. Krumfield
FOR COMMANDER NAVFAC
ACTIVITY TIM FISHER C. 2370.6 BRANCH HEAD
SATISFACTORY TO DATE 10/28/2016
DES GRS DRW BJN CHK DBO
PMDM PETER STOCKLESS
BRANCH MANAGER IAN BODWELL
FEA/PM&E AMIN BAHROUR
FIRE PROTECTION PATRICK BAKAJ

DEPARTMENT OF THE NAVY
NAVAL FACILITIES ENGINEERING COMMAND
PUBLIC WORKS DEPARTMENT - MAINE
NAVAL FACILITIES ENGINEERING COMMAND ~ MID-ATLANTIC
NAVAL SHIPYARD - PORTSMOUTH, NH
KITTERY, ME
PORTSMOUTH NAVAL SHIPYARD
DRY DOCK #1 DEFUELING COMPLEX
ACE-3
WALL DETAILS

EPROJECT NO.: 1363311
CONSTR. CONTR. NO. N40085-17-C-5002
NAVFAC DRAWING NO. 12735240
SHEET 23 OF 43
A-502 DD1-16-1321

DRAWFORM REVISION: 10 OCTOBER 2014

10/28/2016 7:27:39 AM X:\297 PORTSMOUTH NAVAL SHIPYARD\297.005.001 - DD#1 DEFUELING COMPLEX DESIGN\DRAWINGS\ACE3\SHEETS\A-502.DWG

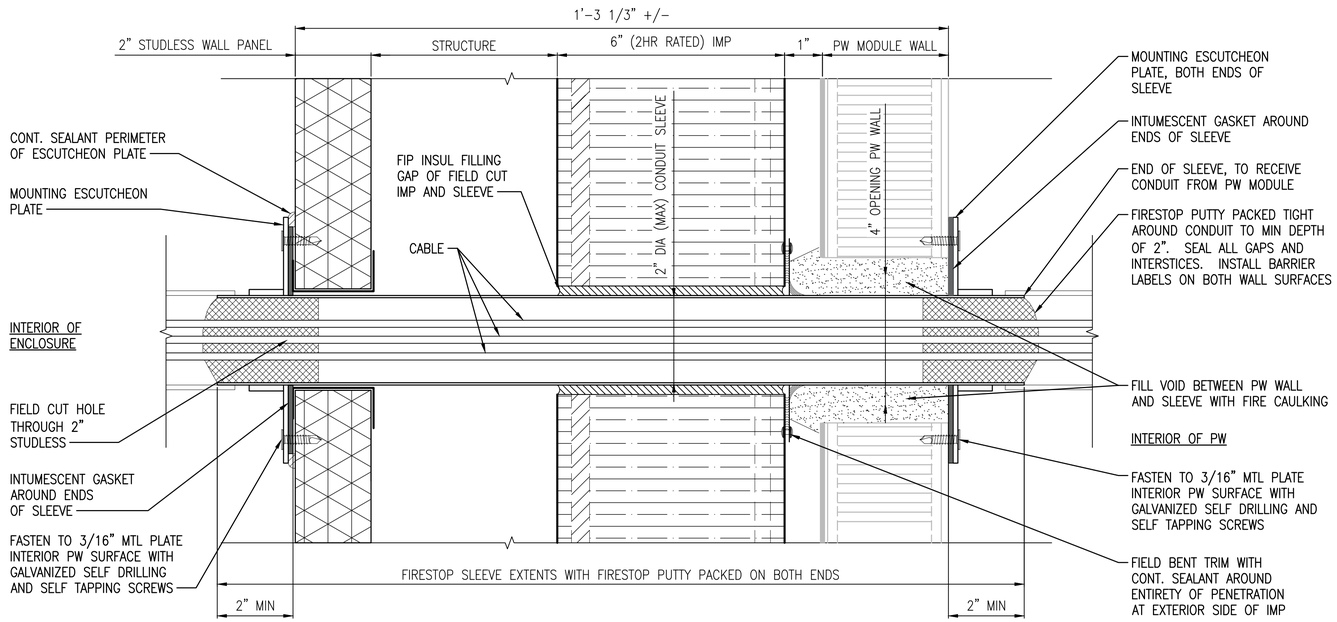

DETAIL NOTE: FIRESTOP SLEEVE TO BE INSTALLED FIRST WITHIN ENCLOSURE WALL ASSEMBLY AND HAVE ENOUGH LENGTH ON EXTERIOR SIDE TO PENETRATE THROUGH PASSAGEWAY MODULE WALL OPENING WHEN BOTH ENCLOSURES AND PASSAGEWAY MODULES ARE IN FINAL RESPECTIVE LOCATIONS ON THE SITE. PASSAGEWAY WALL OPENING MAY BE FIELD LOCATED IF NECESSARY IN ORDER TO PROVIDE BEST COORDINATION WITH LOCATION OF FIRESTOP SLEEVE FROM ENCLOSURE SIDE.

TYP CONDUIT SLEEVE PENETRATION SECTION

SCALE: 6"=1'-0"

A-602 C1

MOUNTING GUIDANCE

WEIGHT (LBS)	DEPTH	FASTENER TYPE
0-25	0 TO 6"	THIN PROFILE SHEET METAL TEK SCREWS
0-25	> 6"	HEAVY DUTY RIVET NUT TWIST RESISTANT
25-50	ALL CASES	HEAVY DUTY RIVET NUT TWIST RESISTANT

NOTES

1. SPECIAL ATTENTION TO BE GIVEN TO AIR AND WATER INFILTRATION PROTECTION AROUND ALL EXTERIOR PENETRATIONS, JOINTS, SEAMS AND EDGES.
2. UNLESS STATED OTHERWISE, FASTENER AND POP RIVET SPACING PER MANUFACTURER'S STANDARD REQUIREMENTS.

MOUNTING GUIDANCE NOTES:

1. MOUNTING GUIDANCE ASSUMES THAT ALL EQUIPMENT IS MOUNTED ON STUDLESS WALL PANEL, HONEYCOMB PORTION OF WALL. WHENEVER POSSIBLE, EQUIPMENT SHOULD BE MOUNTED TO THE INTERIOR METAL PANEL'S INTERNAL RACEWAYS FOR ADDITIONAL STRUCTURAL SUPPORT.

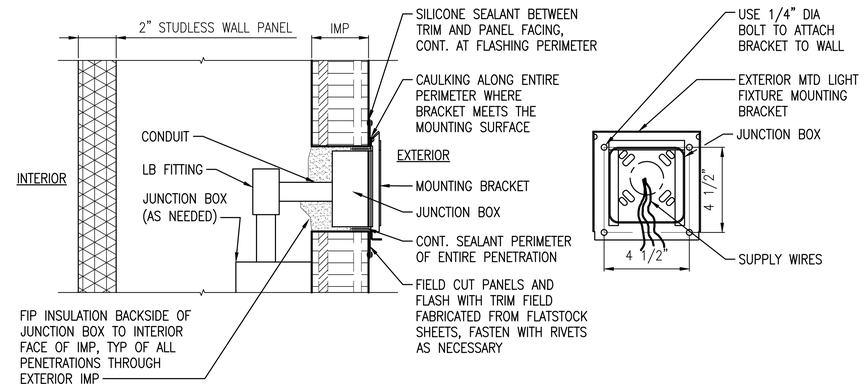

DETAIL NOTES:

1. FASTENERS SHALL BE OF SUFFICIENT SIZE, STRENGTH AND LENGTH IN ACCORDANCE INSULATED METAL PANELS REQUIREMENTS.
2. BED FASTENER IN SEALANT TO PROVIDE WEATHER-TIGHT JOINT. SEE SPECIFICATION SECTIONS 07 42 63 AND 07 92 00 FOR MORE INFORMATION
3. CUT PANEL FACINGS WITH DREMEL ROUTER OR SIM, CUT IMP CORE WITH SERRATED BREAD KNIFE. SPECIAL CARE SHOULD BE TAKEN TO PREVENT PANEL DELAMINATION.
4. DO NOT PENETRATE PANEL JOINERY, LOCATE PENETRATIONS ACCORDINGLY..

EXTERIOR MTD LIGHT BRACKET DETAIL

SCALE: 3"=1'-0"

C4

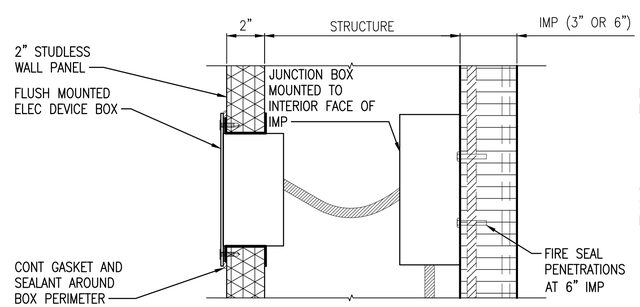

TYP FLUSH MOUNT ELEC SECTION

SCALE: 3"=1'-0"

B1

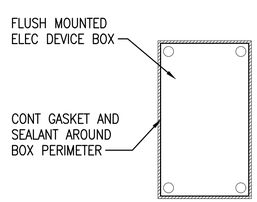

TYP FLUSH MOUNT ELEC ELEVATION

SCALE: 3"=1'-0"

B2

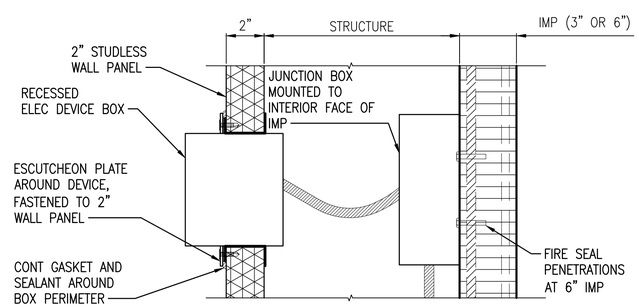

TYP SURFACE MOUNT ELEC SECTION

SCALE: 3"=1'-0"

B3

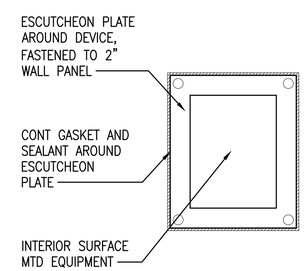

TYP SURFACE MOUNT ELEC ELEVATION

SCALE: 3"=1'-0"

B4

0 6" 12" 18"
Scale: 6" = 1'-0"
0 3" 6" 9"
Scale: 3" = 1'-0"

SYM	DESCRIPTION	DATE	APPR
0	ISSUED FOR CONSTRUCTION	10/28/2016	CBC

NAVFAC

REGISTERED ARCHITECT DONALD M. DYER No. 859 STATE OF MAINE 10/28/16

Colby Company engineering

A/E INFO

APPROVED David W. Krumfeld
FOR COMMANDER NAVFAC

ACTIVITY
TIM FISHER
C. 2370.6 BRANCH HEAD

SATISFACTORY TO DATE 10/28/2016

DES GRN DRW GCN CHK DBD

PMDM PETER STOCKLESS
BRANCH MANAGER IAN BODWELL
FEA/PM&E AMIN BAHROUR
FIRE PROTECTION PATRICK BAKAJ

DEPARTMENT OF THE NAVY
NAVAL FACILITIES ENGINEERING COMMAND
PUBLIC WORKS DEPARTMENT, MAINE
NAVAL FACILITIES ENGINEERING COMMAND ~ MID-ATLANTIC
NAVAL SHIPYARD, PORTSMOUTH, NH
PORTSMOUTH NAVAL SHIPYARD
KITTERY, ME
DRY DOCK #1 DEFUELING COMPLEX
ACE-3
MOUNTING DETAILS

EPROJECT NO.: 1363311
CONSTR. CONTR. NO. N40085-17-C-5002
NAVFAC DRAWING NO. 12735241
SHEET 24 OF 43
A-503 DD1-16-1322

DRAWFORM REVISION: 10 OCTOBER 2014

10/28/2016 7:27:50 AM X:\297 PORTSMOUTH NAVAL SHIPYARD\297.005.001 - DD#1 DEFUELING COMPLEX DESIGN\DRAWINGS\ACE3\SHEETS\A-503.DWG

FINISH SCHEDULE

LEVEL	ROOM	FLOORS	CEILING	WALLS	NOTES
GROUND LEVEL	VESTIBULE	MTL GRATE	METAL LINER PANEL (MLCP)	OTS	–
GROUND LEVEL	ACE–3 MAIN	EPOXY CONCRETE	2'x2' CLG SYSTEM	2" STUDLESS	–
GROUND LEVEL	RADCON STATION	EPOXY CONCRETE	2'x2' CLG SYSTEM	2" STUDLESS	(2) FRAMED WALL OPENINGS

ABBREVIATIONS

OTS – OPEN TO STRUCTURE
CLG – CEILING

DOOR SCHEDULE

ID	LOCATION	TYPE	HEIGHT	WIDTH	THICK NESS	DOOR MATL	GLAZING	FRAME MATL	FRAME TYPE	FIRE LABEL	HDWR SET	HEAD	JAMB	SILL	REMARKS
001	EMERGENCY EXIT	A	7'–0"	3'–0"	1 3/4"	HM	–	HM	F1	–	4	C1/A–601	B1/A–601	A1/A–601	
002	ENTRANCE/EXIT	B	7'–0"	3'–0"	1 3/4"	HM	Y	HM	F1	90MIN	12A	C2/A–601	B2/A–601	A2/A–601	SEE NOTE 3
003	DOCKSIDE PW	G	7'–0"	3'–0"	1 3/4"	HM	Y	HM	F1	90MIN	12B	B1/A–602	C3/A–602	A1/A–602	SEE NOTE 2
004	SHIPBOARD PW	G	7'–0"	3'–0"	1 3/4"	HM	Y	HM	F1	90MIN	12B	B1/A–602	C3/A–602	A1/A–602	SEE NOTE 2

DOOR NOTES

1. ALL INTERIOR DOORS TO BE PART OF 2" STUDLESS INTERIOR WALL SYSTEM AND BE PROVIDED BY WALL SYSTEM MANUFACTURER. SEE SPEC SECTION 09 73 00 FOR ADDITIONAL DETAILS ON THESE INTERIOR DOORS.
2. DOOR LOUVER TO BE 90MIN FIRE–RATED WITH FUSIBLE LINK REMOVABLE FRAMED SCREEN.
3. GLAZING ON DOOR 002, 003 AND 004 TO HAVE INTERIOR MOUNTED BARS OR GRILL WITH NO OPENING GREATER THAN 96 SQ IN.
4. ALL DOOR FRAMES WITHIN ACE–3 TO BE 5 3/4" DEEP. CONTRACTOR SHALL VERIFY ALL DOOR FRAME THROAT SIZES.

ABBREVIATIONS

HDWR – HARDWARE
HM – HOLLOW METAL
MATL – MATERIAL
PW – PASSAGEWAY

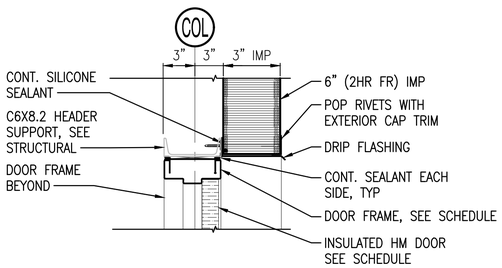

DOOR 001 HEAD (C1)
SCALE: 1 1/2" = 1'–0" A–601

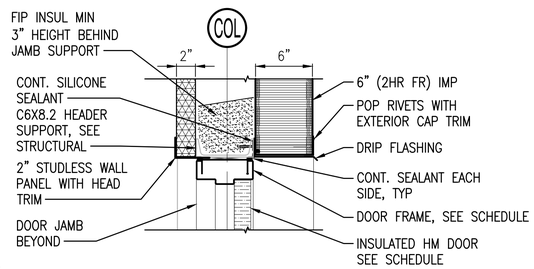

DOOR 002 HEAD (C2)
SCALE: 1 1/2" = 1'–0" A–601

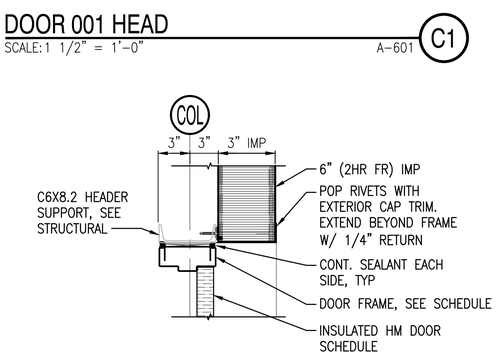

DOOR 001 JAMB (B1)
SCALE: 1 1/2" = 1'–0" A–601

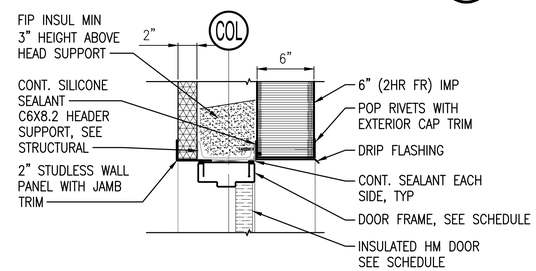

DOOR 002 JAMB (B2)
SCALE: 1 1/2" = 1'–0" A–601

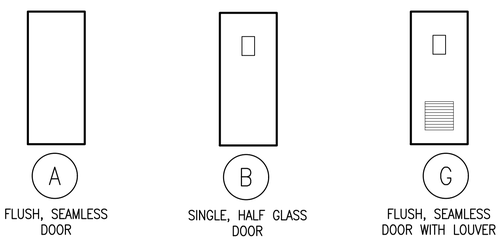

DOOR TYPES (C4)
SCALE: NTS

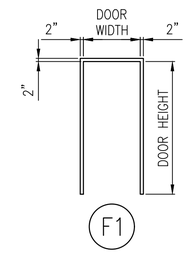

FRAME TYPES (C5)
SCALE: NTS

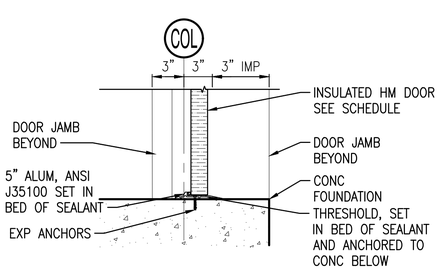

NOTE: SEE VOL 01 SITE AND FOUNDATION PACKAGE FOR GRATING AND CONCRETE FOUNDATION INFORMATION

DOOR 001 SILL (A1)
SCALE: 1 1/2" = 1'–0" A–601

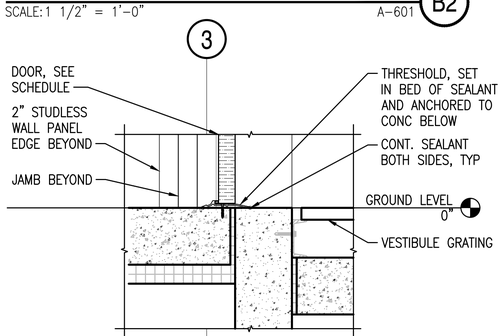

DOOR 002 SILL (A2)
SCALE: 1 1/2" = 1'–0" A–601

PAINT SPECIFICATION TABLE

PAINT LOCATION	SUBSTRATE	SURFACE PREPARATION	PRIMER	TOP COAT	COLOR
EXTERIOR – HANDRAIL	CARBON STEEL	SSPC–6	PPG AMERLOCK 2 (OR APPROVED EQUAL) 4–6 MILS DFT	PPG AMERLOCK 2 (OR APPROVED EQUAL) 4–6 MILS DFT	WHITE
EXTERIOR – LADDERS	CARBON STEEL	SSPC–6	PPG AMERLOCK 2 (OR APPROVED EQUAL) 4–6 MILS DFT	PPG AMERLOCK 2 (OR APPROVED EQUAL) 4–6 MILS DFT	WHITE
EXTERIOR – MOVABLE ROOF NON SKID WALKING SURFACES	CARBON STEEL	SSPC–10	PPG AMERLOCK 2 (OR APPROVED EQUAL) 4–6 MILS DFT	PPG AMERLOCK 2 (OR APPROVED EQUAL) 4–6 MILS DFT, WITH NON SKID ADDITIVE	WHITE
EXTERIOR – PERSONNEL DOORS	CARBON STEEL	PER DOOR MANUFACTURERS SPEC.	PPG AMERLOCK 2 (OR APPROVED EQUAL) 2–4 MILS DFT	PPG AMERLOCK 2 (OR APPROVED EQUAL) 2–4 MILS DFT	WHITE/RED SEE NOTE 1 BELOW
INTERIOR NON EXPOSED STRUCTURAL STEEL	CARBON STEEL	SSPC–2	PPG AMERLOCK 2 (OR APPROVED EQUAL)2–4 MILS DFT	NONE	ANY
INTERIOR – HVAC GRILLS	CARBON STEEL OR ALUMINUM	SSPC–6	PPG AMERLOCK 2 (OR APPROVED EQUAL)4–6 MILS DFT	PPG AMERLOCK 2 (OR APPROVED EQUAL)4–6 MILS DFT	WHITE
IMP TRIM AND EXTERIOR FLASHING, 26 GAGE	GALVANIZED SHEET STEEL	PER MANUFACTURERS SPEC.		KYNAR 500 FINISH	WHITE

PAINT NOTES:
1. ALL DOORS THAT EXIT TO EXTERIOR ARE TO BE PAINTED RED ON EXTERIOR FACING SIDE.

0 1/2" 1' 1 1/2"
Scale: 1 1/2" = 1'–0"

SYM	DESCRIPTION	DATE	APPR
0	ISSUED FOR CONSTRUCTION	10/28/2016	CBC

NAVFAC
REGISTERED ARCHITECT DONALD M. DYER No. 859 STATE OF MAINE 10/28/16

Colby Company engineering

APPROVED Donald W. Brunfeldt
FOR COMMANDER NAVFAC
ACTIVITY TIM FISHER C. 2370.6 BRANCH HEAD
SATISFACTORY TO DATE 10/28/2016
DES GJN DRW GJN CHK DMD
PM/DM PETER STOCKLESS
BRANCH MANAGER IAN BODWELL
FEAD/PM&E AMIN BAHROUR
FIRE PROTECTION PATRICK BAKAJ

DEPARTMENT OF THE NAVY
NAVAL FACILITIES ENGINEERING COMMAND
PUBLIC WORKS DEPARTMENT - MAINE
NAVAL FACILITIES ENGINEERING COMMAND ~ MID-ATLANTIC
NAVAL SHIPYARD - PORTSMOUTH, NH
PORTSMOUTH NAVAL SHIPYARD
KITTERY, ME
DRY DOCK #1 DEFUELING COMPLEX
ACE-3
ROOM FINISH AND DOOR SCHEDULES

EPROJECT NO.: 1363311
CONSTR. CONTR. NO. N40085-17-C-5002
NAVFAC DRAWING NO. 12735242
SHEET 25 OF 43
A-601 DD1-16-1323

DRAWFORM REVISION: 10 OCTOBER 2014

10/28/2016 7:28:04 AM X:\297 PORTSMOUTH NAVAL SHIPYARD\297.005.001 - DD#1 DEFUELING COMPLEX DESIGN\DRAWINGS\ACE3\SHEETS\A-601.DWG

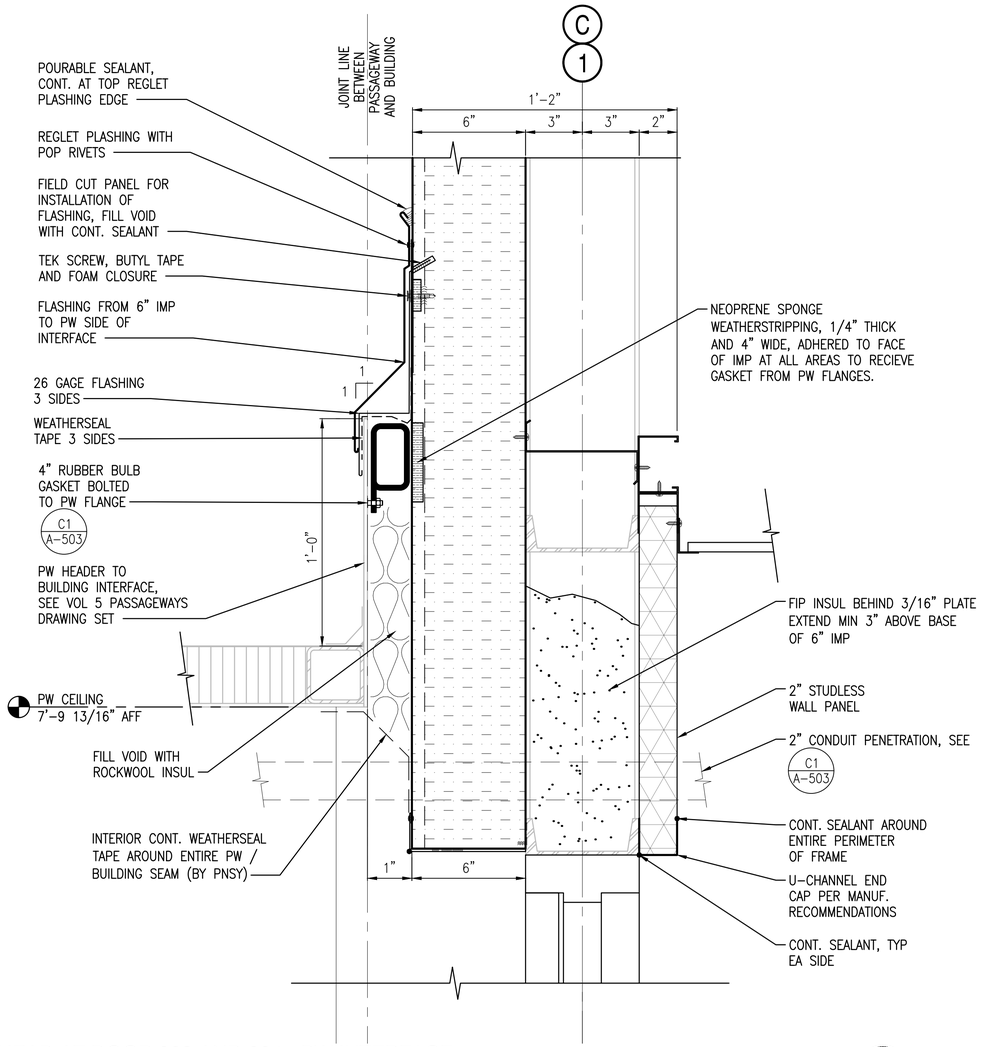

HEAD AT DOOR 003 AND 004 - PW INTERFACE

SCALE: 3"=1'-0" A-201, A-601 (B1)

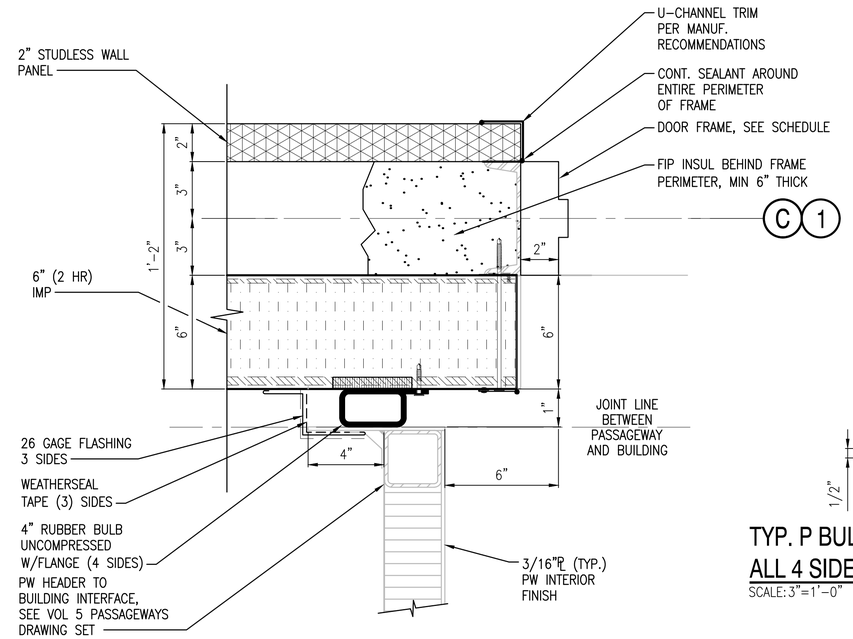

JAMB AT DOOR 003 AND 004 - PW INTERFACE

SCALE: 3"=1'-0" A-100, A-601 (C3)

NOTES

1. SEE DRAWING A-001 FOR GENERAL NOTES, ABBREVIATIONS AND LEGEND.
2. UNLESS STATED OTHERWISE, FASTENER AND POP RIVET SPACING PER MANUFACTURER'S STANDARD REQUIREMENTS.

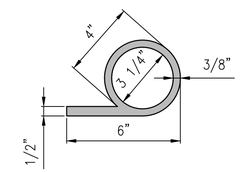

TYP. P BULB GASKET AT JOINT LINE ALL 4 SIDES OF INTERFACE

SCALE: 3"=1'-0" A-602 (C5)

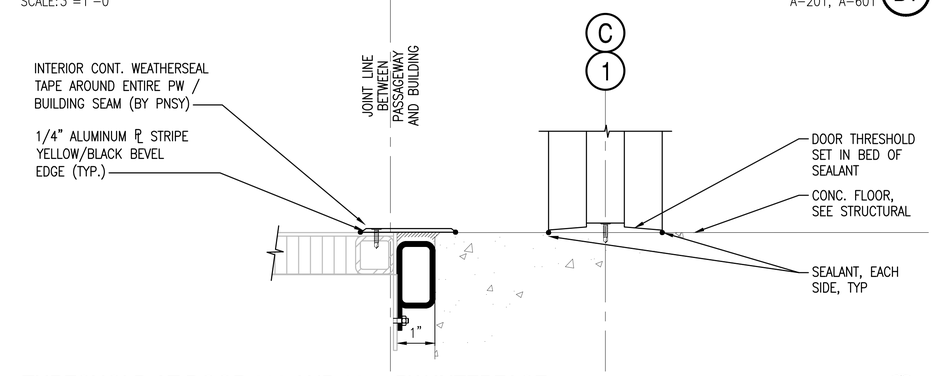

THRESHOLD AT DOOR 003 AND 004 - PW INTERFACE

SCALE: 3"=1'-0" A-201, A-301, A-601 (A1)

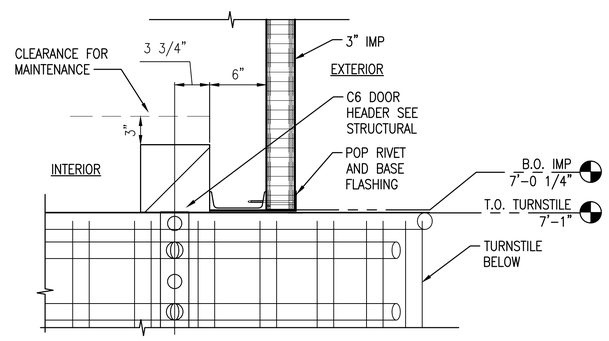

TURNSTILE HEADER

SCALE: 1 1/2"=1'-0" (A3)

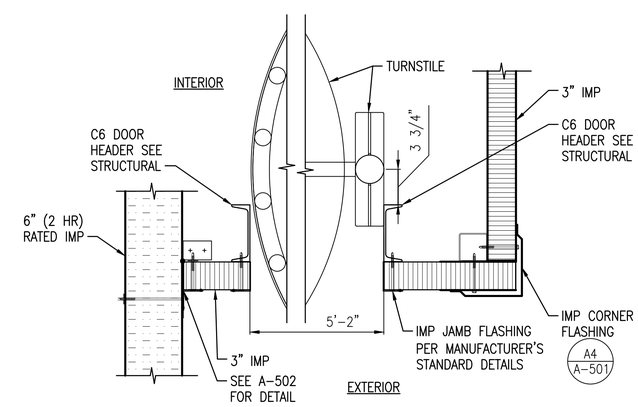

TURNSTILE JAMB

SCALE: 1 1/2"=1'-0" A-100 (A5)

0 1/2' 1' 1 1/2'
Scale: 1 1/2" = 1'-0"
0 3" 6" 9"
Scale: 3" = 1'-0"

SYM	DESCRIPTION	DATE	APPR
0	ISSUED FOR CONSTRUCTION	10/28/2016	CBC

NAVFAC

REGISTERED ARCHITECT DONALD M. DYER No. 859 STATE OF MAINE 10/28/16

Colby Company engineering

A/E INFO

APPROVED David W. Krumfield FOR COMMANDER NAVFAC

ACTIVITY TIM FISHER C. 2370.6 BRANCH HEAD

SATISFACTORY TO DATE 10/28/2016

DES GJN DRW GJN CHK DMD

PMDM PETER STOCKLESS

BRANCH MANAGER IAN BODWELL

FEA/PM&E AMIN BAHROUR

FIRE PROTECTION PATRICK BAKAJ

DEPARTMENT OF THE NAVY
NAVAL FACILITIES ENGINEERING COMMAND ~ MID-ATLANTIC
PUBLIC WORKS DEPARTMENT - MAINE
NAVAL FACILITIES ENGINEERING COMMAND
NAVAL SHIPYARD - PORTSMOUTH, NH
PORTSMOUTH NAVAL SHIPYARD KITTERY, ME
DRY DOCK #1 DEFUELING COMPLEX
ACE-3
DOOR DETAILS

EPROJECT NO.: 1363311

CONSTR. CONTR. NO. N40085-17-C-5002

NAVFAC DRAWING NO. 12735243

SHEET 26 OF 43

A-602 DD1-16-1324

DRAWFORM REVISION: 10 OCTOBER 2014

10/28/2016 7:28:10 AM X:\297 PORTSMOUTH NAVAL SHIPYARD\297.005.001 - DD#1 DEFUELING COMPLEX DESIGN\DRAWINGS\ACE3\SHEETS\A-602.DWG

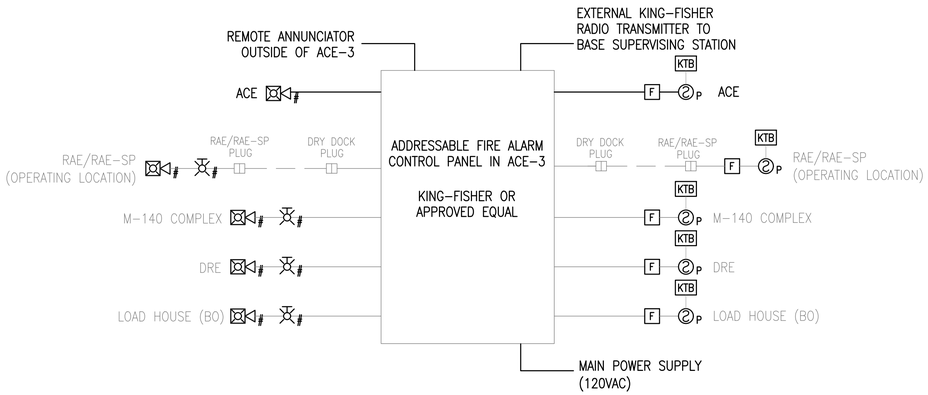

NOTES:
1. THIS SCHEMATIC IS FOR REQUIRED SYSTEM COMPONENT ILLUSTRATION ONLY. REFER TO SITE PLAN FA-101 FOR ZONING REQUIREMENTS AND THE FLOOR PLANS FOR EACH ENCLOSURE TO DETERMINE DEVICE QUANTITIES.
2. REMOTE ANNUNCIATOR OUTSIDE OF ACE-3 SHALL BE PROVIDED WITH MANUFACTURER'S NEMA 4X WEATHERPROOF ENCLOSURE AND A 24 VAC HEATER.

FIRE ALARM RISER DIAGRAM (C1)

SCALE: NTS

LEGEND

- F WP — FIRE ALARM MANUAL PULL STATION WEATHERPROOF
- P — SMOKE DETECTOR. CEILING MOUNTED
  - A – AUXILIARY CONTACT
  - H – HEAT/SMOKE
  - P – PHOTOELECTRIC SMOKE
  - PH – PHOTOELECTRIC/HEAT SMOKE
- P — SMOKE DETECTOR, WALL MOUNTED
  - P – PHOTOELECTRIC SMOKE
- WP — FIRE ALARM HORN/STROBE NOTIFICATION APPLIANCE (GENERAL EVACUATION) – CLEAR STROBE COLOR
  - INDICATES WEATHER PROOF
  - INDICATES CANDELA INTENSITY
- 75 — FIRE ALARM VISIBLE ONLY (STROBE) NOTIFICATION APPLIANCE, CEILING MOUNTED, CLEAR STROBE
  - INDICATES CANDELA INTENSITY
- 75 — FIRE ALARM VISIBLE ONLY (STROBE) NOTIFICATION APPLIANCE, WALL MOUNTED, CLEAR STROBE
- AM I/O — FIRE ALARM ADDRESSABLE MODULE
  - INDICATES INPUT OR OUTPUT
- KTB — KEYED TEST BOX FOR REMOTE-MOUNTED AREA SMOKE DETECTORS PER PNSY STANDARDS

ABBREVIATIONS

AMP	AMPERE
AFF	ABOVE FINISHED FLOOR
AFG	ABOVE FINISHED GRADE
AHJ	AUTHORITY HAVING JURISDICTION
AIC	AMPERE INTERRUPTING CAPACITY
AWG	AMERICAN WIRE GAUGE
BFG	BELOW FINISHED GRADE
BLDG	BUILDING
BO	BID OPTION
BOS	BOTTOM OF STEEL
C	CONDUIT
CATV	CABLE TELEVISION
CB	CIRCUIT BREAKER
CCTV	CLOSED CIRCUIT TELEVISION
CT	CURRENT TRANSFORMER
CU	COPPER
DB	DIRECT BURIED
DISC	DISCONNECT
DN	DOWN
EMT	ELECTRICAL METALLIC TUBING
EWC	ELECTRIC WATER COOLER
EWH	ELECTRIC WATER HEATER
EQP	EQUIPMENT
EXIST	EXISTING
FAA	FIRE ALARM ANNUNCIATOR
FACP	FIRE ALARM CONTROL PANEL
FBO	FURNISHED BY OTHERS
FLR	FLOOR
FVNR	FULL VOLTAGE NON REVERSING
FWE	FURNISHED WITH EQUIPMENT
FU	FUSE
GEN	GENERATOR
GFCI	GROUND FAULT CIRCUIT INTERRUPT
CLG	CEILING
GND	GROUND
HP	HORSEPOWER
HTR	HEATER
IG	ISOLATED GROUND
IMC	INTERMEDIATE METAL CONDUIT
K	KILO
KA	KILO-AMP
KCMIL	THOUSAND CIRCULAR MILS
KV	KILOVOLT
KVA	KILOVOLT-AMPERE
KW	KILOWATT
KWH	KILOWATT-HOUR
LA	LIGHTNING ARRESTER
LTG	LIGHTING
MAX	MAXIMUM
MC	METAL CLAD
MCB	MAIN CIRCUIT BREAKER
MFR	MANUFACTURER
MLO	MAIN LUG ONLY
MTD	MOUNTED
MV	MEDIUM VOLTAGE
NC	NORMALLY CLOSED
NEC	NATIONAL ELECTRIC CODE
NEG	NEGATIVE
NEUT	NEUTRAL
NIC	NOT IN CONTRACT
NO	NORMALLY OPEN
NTS	NOT TO SCALE
PH	PHASE
PV	PHOTOVOLTAIC
PVC	POLYVINYL CHLORIDE
RM	ROOM
RSC	RIGID STEEL CONDUIT
SWBD	SWITCHBOARD
TGB	TELECOMMUNICATIONS GROUNDING BUSBAR
TOS	TOP OF STEEL
TANSF	TRANSFORMER
TVSS	TRANSIENT VOLTAGE SURGE SUPPRESSER
V	VOLT
VA	VOLT-AMPERE
VFD	VARIABLE FREQUENCY DRIVE
WM	WATT METER
WP	WEATHER PROOF
XFMR	TRANSFORMER
XP	EXPLOSION PROOF

GENERAL NOTES

1. ALL GENERAL NOTES, SYMBOL LISTS AND DETAILS ARE TO BE CONSIDERED AS APPLICABLE TO ALL FIRE ALARM DRAWINGS FOR THIS PROJECT. SYMBOLS AND ABBREVIATIONS SHOWN ON THIS SHEET ARE FOR REFERENCE ONLY AND DO NOT INDICATE THEIR INCORPORATION IN THE DESIGN.
2. REFER TO SPECIFICATION SECTION 00 22 13.00 20 FOR A LIST OF BID OPTIONS FOR THIS PROJECT.
3. ALL WORK SHALL BE PERFORMED IN ACCORDANCE WITH UFC 3-600-10N FIRE PROTECTION ENGINEERING (FINAL DRAFT) AUGUST 2007, UFC 3-600-01 DESIGN FIRE PROTECTION ENGINEERING FOR FACILITIES 2013, NFPA-70, NATIONAL ELECTRICAL CODE (NEC) 2014, AND NFPA-72, NATIONAL FIRE ALARM AND SIGNALING CODE 2013.
4. SMOKE DETECTORS ARE NOT REQUIRED BY THE AHJ. PNSY HAS REQUESTED SMOKE DETECTORS IN CERTAIN SPECIFIC LOCATIONS, AND ACKNOWLEDGES THAT SPACING/COVERAGE WILL NOT MEET NFPA 72 REQUIREMENTS. SMOKE DETECTORS SHALL MEET ALL OTHER APPLICABLE DESIGN AND INSTALLATION REQUIREMENTS OF NFPA 72.
5. A KING-FISHER INDUSTRIAL RADIO TRANSMITTER SHALL BE PROVIDED FOR RETRANSMISSION OF ALL SIGNALS TO THE FIRE STATION (BASE SUPERVISING STATION). THE FIRE STATION IS CONSTANTLY ATTENDED.
6. ALL FIRE ALARM CIRCUITS SHALL BE CLASS B AND INSTALLED IN CONDUIT.
7. PER PNSY INSTRUCTIONS, FIRE ALARM WIRING SHALL BE ROUTED INSIDE ENCLOSURES AND PASSAGEWAYS, EXCEPT FOR BETWEEN THE ACE AND RAE AND M-140 COMPLEX AND LOAD HOUSE, WHICH WILL HAVE OUTDOOR WIRING. REFER TO SITE AND RAE/RAE-SP FIRE ALARM DRAWINGS.
8. ALL NEW FIRE ALARM WIRING SHALL BE SOLID COPPER AND SIZED BY THE CONTRACTOR PER UFC 3-600-01. THE MINIMUM WIRE SIZE SHALL BE 16 GAUGE FOR INITIATING CIRCUITS AND 14 GAUGE FOR NOTIFICATION CIRCUITS.
9. ALL CONDUCTOR TERMINATIONS MUST BE AT A TERMINAL STRIP. ALL DEVICES MUST HAVE SCREW TERMINALS.
10. PULL ALL CONDUCTORS SPLICE-FREE WHEREVER POSSIBLE. WHERE SPLICES ARE UNAVOIDABLE, PROVIDE INSULATED BARRIER TYPE TERMINAL STRIPS AT JUNCTION POINTS. THE USE OF WIRE NUTS, CRIMPED CONNECTORS, OR TWISTING OF CONDUCTORS IS PROHIBITED. RAE/RAE-SP DRAWINGS INDICATE AN APPROVED BOX MOUNT PLUG EXCEPTION THAT APPLIES TO THESE TWO ENCLOSURES ONLY.
11. UNLESS OTHERWISE INDICATED, FIRE ALARM PULL DEVICES SHALL BE MOUNTED 48-INCHES AFF, AND WALL-MOUNTED FIRE ALARM A/V NOTIFICATION APPLIANCES SHALL BE MOUNTED A MINIMUM OF 90-INCHES AFF AND/OR 6-INCHES BELOW A FINISHED CEILING.
12. ALL PENETRATIONS THROUGH FLOORS, RATED WALLS AND PARTITIONS SHALL BE SEALED WITH UL APPROVED FIRE SEALANT MATERIAL TO MAINTAIN THE RATING OF SEPARATION.
13. PROVIDE ALL MOUNTING HARDWARE NECESSARY FOR A COMPLETE INSTALLATION. MOUNT DEVICES AND ROUTE WIRING SO AS NOT TO INTERFERE WITH OPERATIONS SUCH AS DOOR SWINGS, MECHANICAL EQUIPMENT, ETC.
14. SMOKE DETECTORS MUST BE PHOTOELECTRIC WITH NO IONIZING SOURCE.
15. PROVIDE PROTECTED ENTRANCE CABINETS WITH SURGE PROTECTION PER NFPA 70 WHERE LOW VOLTAGE CABLES PENETRATE THE EXTERIOR WALLS OF ENCLOSURES.

SYSTEM OUTPUTS

SYSTEM INPUTS		A: ACTUATE COMMON ALARM SIGNAL INDICATOR	B: ACTUATE AUDIBLE/VISUAL ALARM SIGNAL (NOTE 1)	C: ACTUATE COMMON TROUBLE SIGNAL INDICATOR	D: ACTUATE AUDIBLE/VISUAL TROUBLE SIGNAL INDICATOR	E: ACTUATE APPROPRIATE LOCATION INDICATOR	F: DISPLAY CHANGE OF STATUS AT FACP AND FAA	G: TRANSMIT SIGNAL TO BASE SUPERVISING STATION
1	MANUAL FIRE ALARM BOX	●	●			●	●	●
2	SMOKE DETECTOR	●	●			●	●	●
3	OPEN CIRCUIT			●	●		●	●
4	SMOKE DETECTOR - DIRTY			●	●	●	●	
5	GROUND FAULT			●	●		●	●
6	NOTIFICATION APPLIANCE CIRCUIT SHORT			●	●		●	●
7	FIRE ALARM AC FAILURE			●	●		●	●
8	FIRE ALARM SYSTEM LOW BATTERY			●	●		●	●

NOTE:
1. AUDIBLE/VISUAL FIRE ALARM SIGNAL SHALL BE TRANSMITTED TO EVERY NOTIFICATION APPLIANCE IN THE COMPLEX REGARDLESS OF WHICH INITIATING ZONE GENERATES THE ALARM.

FIRE ALARM INPUT/OUTPUT MATRIX (A2)

SCALE: NTS

SYM	DESCRIPTION	DATE	APPR
0	ISSUED FOR CONSTRUCTION	10/28/2016	CBC

NAVFAC

STATE OF MAINE — EMILY PINYARD No.12126 — LICENSED PROFESSIONAL ENGINEER — 10/28/16 — SEAL

Colby Company engineering — A/E INFO

APPROVED: David W. Krumfield — FOR COMMANDER NAVFAC

ACTIVITY: TIM FISHER, C. 2370.6 BRANCH HEAD

SATISFACTORY TO — DATE: 10/28/2016

DES: ERP | DRW: CSS | CHK: WEP

PMDM: PETER STOCKLESS

BRANCH MANAGER: IAN BODWELL

FEADPM&E: AMIN BAHROUR

FIRE PROTECTION: PATRICK BAKAJ

DEPARTMENT OF THE NAVY — NAVAL FACILITIES ENGINEERING COMMAND — PUBLIC WORKS DEPARTMENT, MAINE

NAVAL FACILITIES ENGINEERING COMMAND ~ MID-ATLANTIC — NAVAL SHIPYARD, PORTSMOUTH, NH

PORTSMOUTH NAVAL SHIPYARD — KITTERY, ME

DRY DOCK #1 DEFUELING COMPLEX — ACE-3

FIRE ALARM LEGEND, ABBREVIATIONS AND GENERAL NOTES

EPROJECT NO.: 1363311

CONSTR. CONTR. NO. N40085-17-C-5002

NAVFAC DRAWING NO. 12735244

SHEET 27 OF 43

FA-001 | DD1-16-1325

DRAWFORM REVISION: 10 OCTOBER 2014

10/28/2016 7:28:13 AM X:\297 PORTSMOUTH NAVAL SHIPYARD\297.005.001 - DD#1 DEFUELING COMPLEX DESIGN\DRAWINGS\ACE3\SHEETS\FA-001.DWG

NOTES

1. SEE SHEET FA-001 FOR LEGEND, ABBREVIATIONS AND GENERAL NOTES.
2. PROVIDE PROTECTED ENTRANCE CABINET(S) PER NFPA 70 WHERE LOW VOLTAGE CABLES PENETRATE THE EXTERIOR WALLS OF THE ACE.
3. THE ACE-3 SHALL BE PROGRAMMED AS DISCONNECT ZONE DZ-1 AT THE FACP AND TRANSMISSION ZONE TZ-1. SEE SITE SHEET FA-101.
4. REFER TO SITE FA-101 FOR GENERAL ROUTING OF FIRE ALARM WIRING.

KEYED NOTES

1. FIRE ALARM ANNUNCIATOR PANEL FOR FIRE DEPARTMENT USE. UNIT SHALL MEET NFPA 72 REQUIREMENTS AND BE RATED FOR EXTERIOR USE WITH A THERMOSTATICALLY CONTROLLED HEATER. INSTALL UNIT IN LOCKABLE CABINET WITH A CLEAR WINDOW DOOR.
2. SEMI-ENCLOSED ENTRANCE WITH TURNSTILE.
3. NEW ADDRESSABLE FIRE ALARM CONTROL PANEL TO SERVE DD#1 DEFUELING COMPLEX. PROVIDE PRIMARY POWER SUPPLY AND BATTERY BACK-UP. PROVIDE KING-FISHER EXTERNAL 16-ZONE RADIO TRANSMITTER FOR SIGNALING TO EXISTING BASE SUPERVISING STATION.
4. PROVIDE CABINET ADJACENT TO THE FACP CONTAINING DUPLICATE ADDRESSABLE FIRE ALARM DEVICES THAT MATCH THE RAE AND RAE-SP CIRCUITS. WHEN RAE AND RAE-SP ARE IN STORAGE, THEIR CIRCUITS WILL BE CONNECTED TO THE DEVICES IN THIS CABINET. TO ALLOW FOR A SMALLER CABINET, REMOVE ALL NECESSARY DEVICE COVERS AND HOUSINGS BEFORE MOUNTING INSIDE CABINET.
5. NOT AN EXIT.

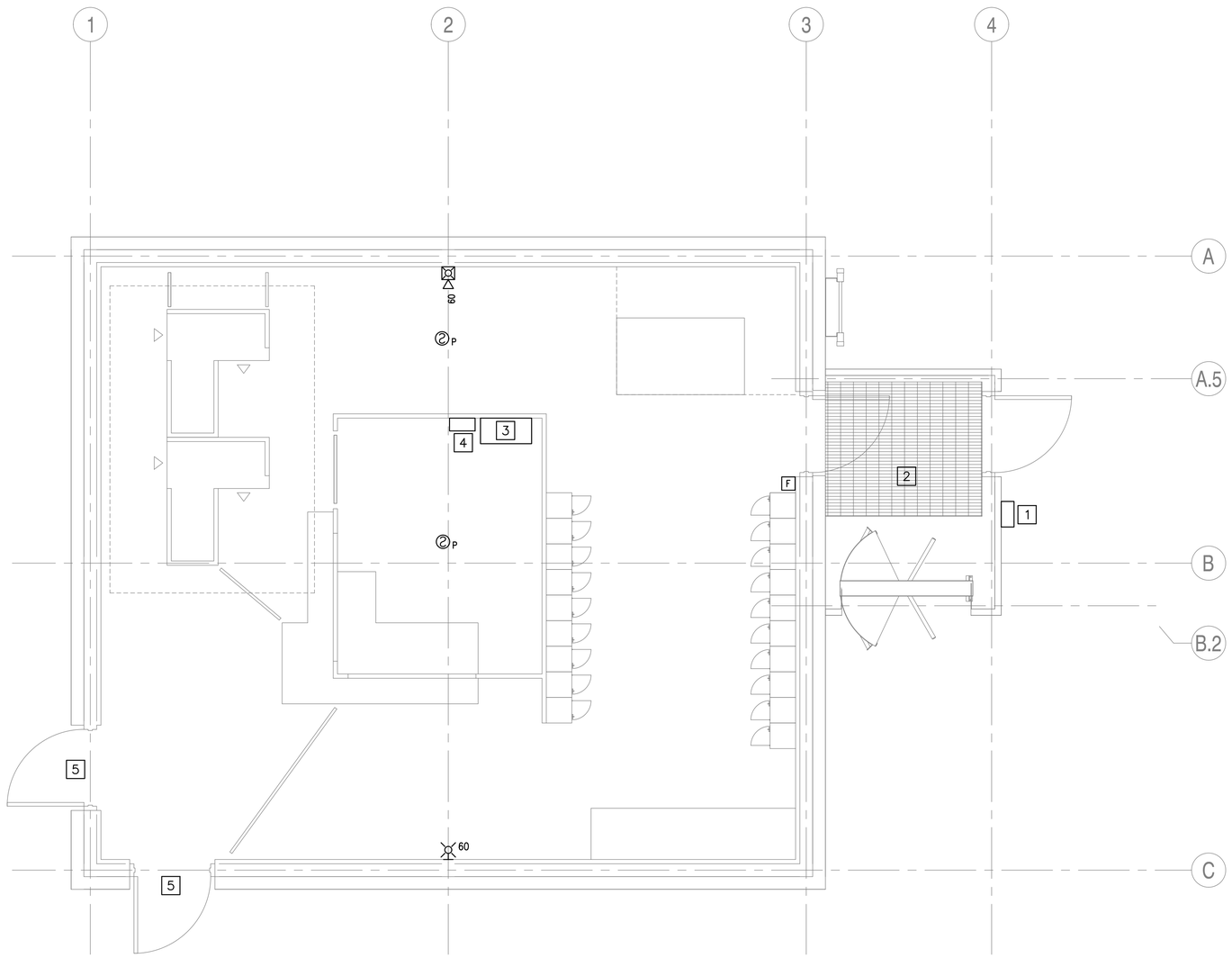

GROUND LEVEL FIRE ALARM PLAN

SCALE: 3/8" = 1'-0"

PLAN NORTH

0 2' 4' 6'
Scale: 3/8" = 1'-0"

SYM	DESCRIPTION	DATE	APPR
0	ISSUED FOR CONSTRUCTION	10/28/2016	CBC

NAVFAC

STATE OF MAINE
EMILY PINYARD
No. 12126
LICENSED PROFESSIONAL ENGINEER
10/28/16
SEAL

Colby Company engineering
A/E INFO

APPROVED
Date 10/28/2016
David W. Grunfeld
FOR COMMANDER NAVFAC

ACTIVITY
TIM FISHER
C. 2370.6 BRANCH HEAD

SATISFACTORY TO DATE 10/28/2016

DES	ERP	DRW	CSS	CHK	WEP

PM/DM PETER STOCKLESS
BRANCH MANAGER IAN BODWELL
FEA/PM&E AMIN BAHROUR
FIRE PROTECTION PATRICK BAKAJ

DEPARTMENT OF THE NAVY
NAVAL FACILITIES ENGINEERING COMMAND
PUBLIC WORKS DEPARTMENT - MAINE
NAVAL FACILITIES ENGINEERING COMMAND ~ MID-ATLANTIC
NAVAL SHIPYARD - PORTSMOUTH, NH
PORTSMOUTH NAVAL SHIPYARD
KITTERY, ME
DRY DOCK #1 DEFUELING COMPLEX
ACE-3
GROUND LEVEL FIRE ALARM PLAN

EPROJECT NO.: 1363311
CONSTR. CONTR. NO. N40085-17-C-5002
NAVFAC DRAWING NO. 12735245
SHEET 28 OF 43

FA-100 | DD1-16-1326

DRAWFORM REVISION: 10 OCTOBER 2014

10/28/2016 7:28:18 AM X:\297 PORTSMOUTH NAVAL SHIPYARD\297.005.001 - DD#1 DEFUELING COMPLEX DESIGN\DRAWINGS\ACE3\SHEETS\FA-100.DWG

ABBREVIATIONS

A	AMP
ACS	ACCESS
ACE	ACCESS CONTROL ENCLOSURE
AHU	AIR–HANDLING UNIT
APD	AIR PRESSURE DROP
BHP	BRAKE HORSEPOWER
C	CONDENSATE
CA	COMPRESSED AIR
CFM	CUBIC FEET PER MINUTE
CLG	COOLING
DB	DRY BULB
DEG	DEGREE
DIA, ø	DIAMETER
DN	DOWN
DP,DPS	DIFFERENTIAL–PRESSURE SENSOR
EA	EACH, EXHAUST AIR
EAT	ENTERING AIR TEMPERATURE
EDH	ELECTRIC DUCT HEATER
EUH	ELECTRIC UNIT HEATER
ESP	EXTERNAL STATIC PRESSURE
EWT	ENTERING WATER TEMPERATURE
F	FAN, FAHRENHEIT
FH	FILTER HOUSING
FT	FEET
GA	GAUGE
GM	GEAR MOTOR
GPM	GALLONS PER MINUTE
HP	HORSEPOWER
HR	HOUR
HTG	HEATING
HZ	HERTZ
IC	INSTRUMENTATION AND CONTROL
IN	INCHES
LAT	LEAVING AIR TEMPERATURE
LB	POUND
LCP	LOCAL CONTROL PANEL
LWT	LEAVING WATER TEMPERATURE
MAX	MAXIMUM
MBH	1000 BTU PER HOUR
MCA	MOTOR CIRCUIT AMPS
MCP	MAIN CONTROL PANEL
MIN	MINIMUM
MOP	MAXIMUM OVERCURRENT PROTECTION
NC	NOISE CRITERIA
NPT	NATIONAL PIPE THREAD
NTS	NOT TO SCALE
OA	OUTSIDE AIR
OIT	OPERATOR INTERFACE TERMINAL
PDS	PRESSURE DIFFERENTIAL SWITCH
PE	PHOTOEYE
PH	PHASE
PT	PRESSURE TRANSMITTER
RA	RETURN AIR
RCP	ROOF CONTROL PANEL
REF	REFRIGERANT
RG	REFRIGERANT, GAS PHASE
RL	REFRIGERANT, LIQUID PHASE
RPM	REVOLUTIONS PER MINUTE
RTU	ROOFTOP UNIT
SA	SUPPLY AIR
SENS	SENSIBLE
SS	STAINLESS STEEL
T	TEMPERATURE SENSOR, THERMOSTAT
TSP	TOTAL STATIC PRESSURE
TYP	TYPICAL
VFD	VARIABLE FREQUENCY DRIVE
W/	WITH
WB	WET–BULB, WHEEL BLOCK
WC	WATER COLUMN
WG	WATER GAUGE
WPD	WATER PRESSURE DROP
ZSC	POSITION SWITCH CLOSED
ZSO	POSITION SWITCH OPEN

DUCTWORK SYMBOLS

- RETURN/EXHAUST DUCT UP
- RETURN/EXHAUST DUCT DOWN
- SUPPLY DUCT UP
- SUPPLY DUCT DOWN
- RADIUS ELBOW
- SQUARE ELBOW W/ TURNING VANES
- OFFSET
- DUCT TRANSITION FROM RECTANGULAR TO ROUND

MECHANICAL LINETYPE LEGEND

- EXISTING ITEMS TO REMAIN
- ITEMS TO BE PROVIDED
- HIDDEN ITEMS
- CONTROL WIRING

MECHANICAL SYMBOLS

- SECTION NUMBER
- DRAWING WHERE SECTION IS DRAWN
- H / 2 — SYMBOL PER ABBREVIATION LIST; EQUIPMENT SEQUENCE NUMBER
- S–1 / 100 — DIFFUSER, REGISTER OR GRILLE SEQUENCE NUMBER; CFM
- UNIT HEATER
- DIRECTION OF AIR FLOW
- VOLUME DAMPER
- M — MOTORIZED DAMPER
- T — THERMOSTAT
- DP — DIFFERENTIAL PRESSURE SENSOR
- T — TEMPERATURE SENSOR
- CONNECT TO EXISTING
- FAN
- MANUAL DAMPER, HAND WHEEL

PIPING SYMBOLS

- BALANCING VALVE
- COMBINATION FLOW MEASURING/ BALANCING VALVE (CIRCUIT SETTER)
- BUTTERFLY VALVE
- GATE VALVE
- BALL VALVE
- GLOBE VALVE
- TWO–WAY AUTOMATIC CONTROL VALVE
- SAFETY RELIEF VALVE
- THREE–WAY AUTOMATIC CONTROL VALVE
- STRAINER W/BALL DRAIN VALVE, HOSE BIB AND CAP
- UNION OR FLANGE AS DICTATED BY PIPE SIZE
- PIPE RISE
- PIPE DROP
- END CAP
- THERMOMETER TEMPERATURE/PRESSURE WELL
- P/T PORT (PRESSURE/TEMPERATURE)
- MANUAL AIR VENT
- REDUCER (ECCENTRIC–FOB OR FOT)
- REDUCER (CONCENTRIC)
- DIRECTION OF FLOW OF PIPE

APPLICABLE CODES AND STANDARDS

- UFC 3–410–04N INDUSTRIAL VENTILATION
- UFC 3–400–01FA HVAC
- SMACNA – HVAC AIR DUCT LEAKAGE MANUAL
- SMACNA – HVAC DUCT CONSTRUCTION STANDARDS

GENERAL NOTES

1. GENERAL NOTES, SYMBOLS LIST AND DETAILS ARE APPLICABLE TO DRAWINGS MARKED M–#.
2. DRAWINGS ARE DIAGRAMMATIC; DETERMINE LOCATIONS OF SYSTEMS AND COMPONENTS IN FIELD.
3. COORDINATE WORK OF THIS SECTION WITH THAT OF OTHER SECTIONS. SPECIFICALLY STRUCTURAL PENETRATIONS OF DUCTWORK AND PIPING THROUGH ENCLOSURE WALL AND PLATFORM GRATING.
4. INSTALL SCREEN CONTROL PANELS 5 FEET ABOVE FINISHED FLOOR.
5. WORK SHALL BE COORDINATED WITH TRADES INVOLVED. OFFSETS IN PIPING AND DUCTS (INCLUDING DIVIDED DUCTS) AND TRANSITIONS AROUND OBSTRUCTIONS SHALL BE PROVIDED AT NO ADDITIONAL COST TO THE GOVERNMENT.
6. VERIFY EQUIPMENT CONNECTIONS WITH MANUFACTURER'S CERTIFIED DRAWINGS. VERIFY AND PROVIDE DUCT TRANSITIONS TO FURNISHED EQUIPMENT. FIELD VERIFY AND COORDINATE ALL DIMENSIONS BEFORE FABRICATION.
7. INSTALL EQUIPMENT, PIPING AND DUCTWORK AS REQUIRED TO PROVIDE A VIBRATION FREE INSTALLATION AND TO FACILITATE EQUIPMENT ACCESS AS REQUIRED BY EQUIPMENT MANUFACTURER.
8. INTERNAL AIR FLOW DIMENSIONS ARE SHOWN FOR DUCTS.
9. PROVIDE CLAMPS, OFFSETS, EXPANSION JOINTS, ANCHORS AND GUIDES AS NECESSARY TO PREVENT STRESS ON PIPING.
10. PROVIDE VENTS AT HIGH POINTS IN PIPING SYSTEMS AND DRAIN VALVES AT LOW POINTS. THIS INCLUDES LOW POINTS IN COMPRESSED AIR SYSTEM PIPING TO ACCOMMODATE DRAINING MOISTURE IN LINES.
11. PROVIDE AT LEAST THREE–ELBOW SWINGS FOR PIPE TAKE–OFFS.
12. REFER TO IC–101 AND IC–200 FOR INSTRUMENTATION AND CONTROL.
13. ALL MANUALLY OPERABLE EQUIPMENT SHALL BE ACCESSIBLE FOR OPERATION WITHOUT REQUIRING SPECIAL EQUIPMENT.

SYM	DESCRIPTION	DATE	APPR
0	ISSUED FOR CONSTRUCTION	10/28/2016	CBC

NAVFAC

STATE OF MAINE — PETER W. BROWN No. 5743 — PROFESSIONAL ENGINEER — 10/28/16 — SEAL

Colby Company engineering — A/E INFO

APPROVED BY: David W. Krumfeld — FOR COMMANDER NAVFAC

ACTIVITY: TIM FISHER, C. 2370.6 BRANCH HEAD

SATISFACTORY TO DATE 10/28/2016

DES EAF | DRW CSS | CHK PWB

PMDM: PETER STOCKLESS

BRANCH MANAGER: IAN BODWELL

FEA/PM&E: AMIN BAHROUR

FIRE PROTECTION: PATRICK BAKAJ

DEPARTMENT OF THE NAVY — NAVAL FACILITIES ENGINEERING COMMAND — PUBLIC WORKS DEPARTMENT, MAINE

NAVAL FACILITIES ENGINEERING COMMAND ~ MID-ATLANTIC — NAVAL SHIPYARD, PORTSMOUTH, NH

PORTSMOUTH NAVAL SHIPYARD — KITTERY, ME

DRY DOCK #1 DEFUELING COMPLEX — ACE-3

MECHANICAL, LEGEND, ABBREVIATIONS AND GENERAL NOTES

EPROJECT NO.: 1363311

CONSTR. CONTR. NO.: N40085-17-C-5002

NAVFAC DRAWING NO.: 12735246

SHEET 29 OF 43

M-001 | DD1-16-1327

DRAWFORM REVISION: 10 OCTOBER 2014

10/28/2016 7:28:22 AM X:\297 PORTSMOUTH NAVAL SHIPYARD\297.005.001 - DD#1 DEFUELING COMPLEX DESIGN\DRAWINGS\ACE3\SHEETS\M-001.DWG

NOTES

1. SEE SHEET M-001 FOR LEGEND, ABBREVIATIONS AND GENERAL NOTES.
2. CONNECT BRANCH DUCTS TO DIFFUSERS AND GRILLES WITH FLEXIBLE CONNECTIONS, MAXIMUM 5 FEET IN LENGTH.

KEYED NOTES

1. CONNECTION TO EXISTING 2" COMPRESSED AIR INFRASTRUCTURE. ROUTE ALONG EXTERIOR WALL AT 7 FEET ABOVE GRADE. SEE SHEET C-102 FOR FURTHER INFORMATION.
2. 16x16 SUPPLY, 14x24 RETURN UP TO RTU-1 ON ROOF.
3. PROVIDE BLAST GATE AT DOOR LOUVER FOR PASSAGEWAY AIR TRANSFER CONTROL. SEE SHEET M-501 FOR DETAIL.

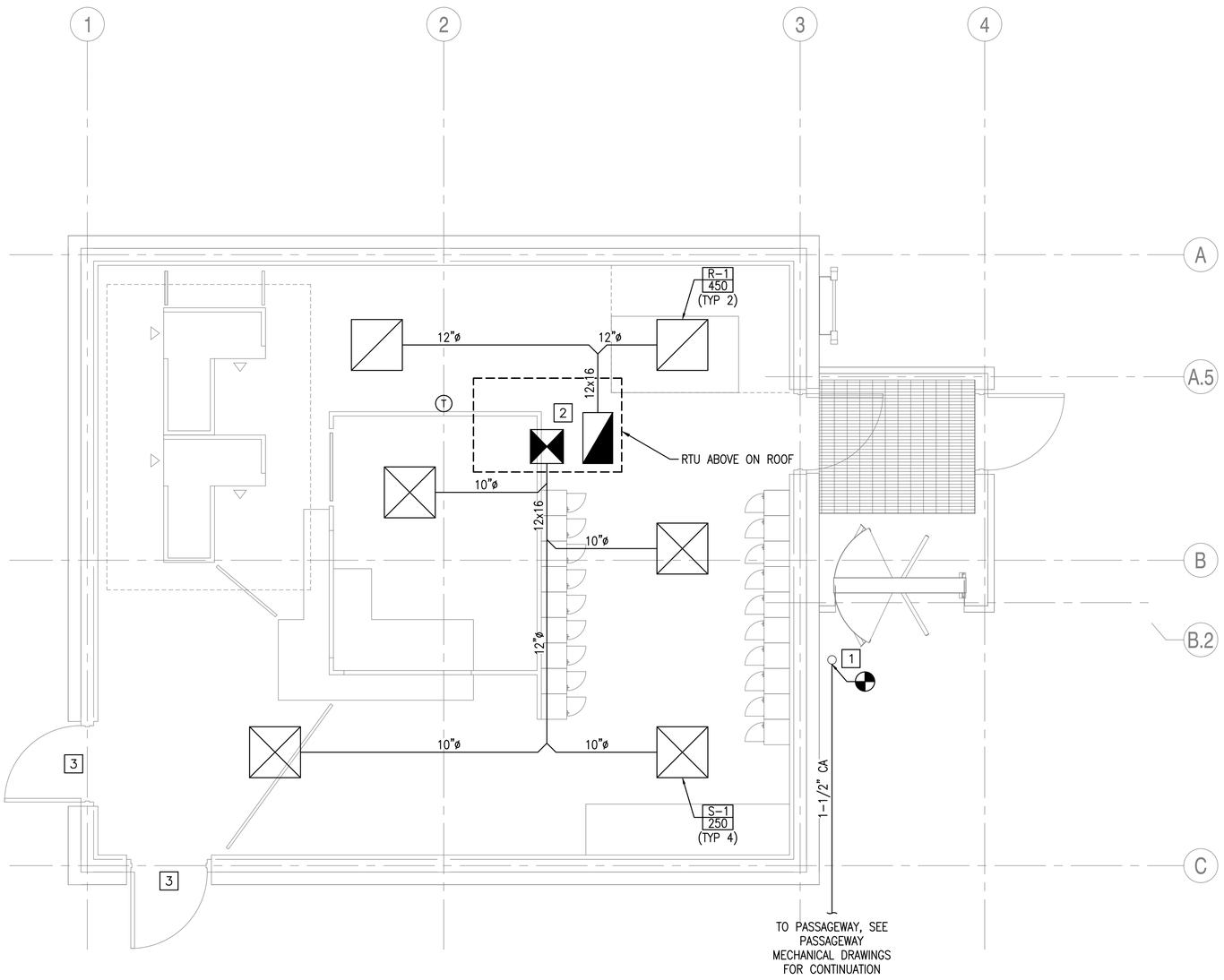

GROUND LEVEL MECHANICAL PLAN

SCALE: 3/8" = 1'-0"

PLAN NORTH

0 2' 4' 6'
Scale: 3/8" = 1'-0"

SYM	DESCRIPTION	DATE	APPR
0	ISSUED FOR CONSTRUCTION	10/28/2016	CBC

NAVFAC

STATE OF MAINE
PETER W. BROWN
No. 5743
PROFESSIONAL ENGINEER
10/28/16
SEAL

Colby Company engineering
A/E INFO

APPROVED
FOR COMMANDER NAVFAC

ACTIVITY
TIM FISHER
C. 2370.6 BRANCH HEAD

SATISFACTORY TO DATE 10/28/2016

DES	EAF	DRW CSS	CHK PWB

PMOM	PETER STOCKLESS
BRANCH MANAGER	IAN BODWELL
FEA/PM&E	AMIN BAHROUR
FIRE PROTECTION	PATRICK BAKAJ

DEPARTMENT OF THE NAVY
NAVAL FACILITIES ENGINEERING COMMAND
PUBLIC WORKS DEPARTMENT - MAINE

NAVAL FACILITIES ENGINEERING COMMAND ~ MID-ATLANTIC
NAVAL SHIPYARD - PORTSMOUTH, NH

PORTSMOUTH NAVAL SHIPYARD
KITTERY, ME

DRY DOCK #1 DEFUELING COMPLEX
ACE-3

GROUND LEVEL MECHANICAL PLAN

EPROJECT NO.: 1363311

CONSTR. CONTR. NO.
N40085-17-C-5002

NAVFAC DRAWING NO.
12735247

SHEET 30 OF 43

M-100 DD1-16-1328

DRAWFORM REVISION: 10 OCTOBER 2014

10/28/2016 7:28:27 AM X:\297 PORTSMOUTH NAVAL SHIPYARD\297.005.001 - DD#1 DEFUELING COMPLEX DESIGN\DRAWINGS\ACE3\SHEETS\M-100.DWG

NOTES

1. SEE SHEET M-001 FOR LEGEND, ABBREVIATIONS AND GENERAL NOTES.

KEYED NOTES

1. 16X16 SUPPLY, 14X24 RETURN DOWN. OFFSET SUPPLY AND RETURN DUCT ACCORDINGLY TO ACCOMMODATE ROOF OPENING, SEE STRUCTURAL.
2. ROUTE 3/4" CONDENSATE TO 2 FEET ABOVE GRADE.

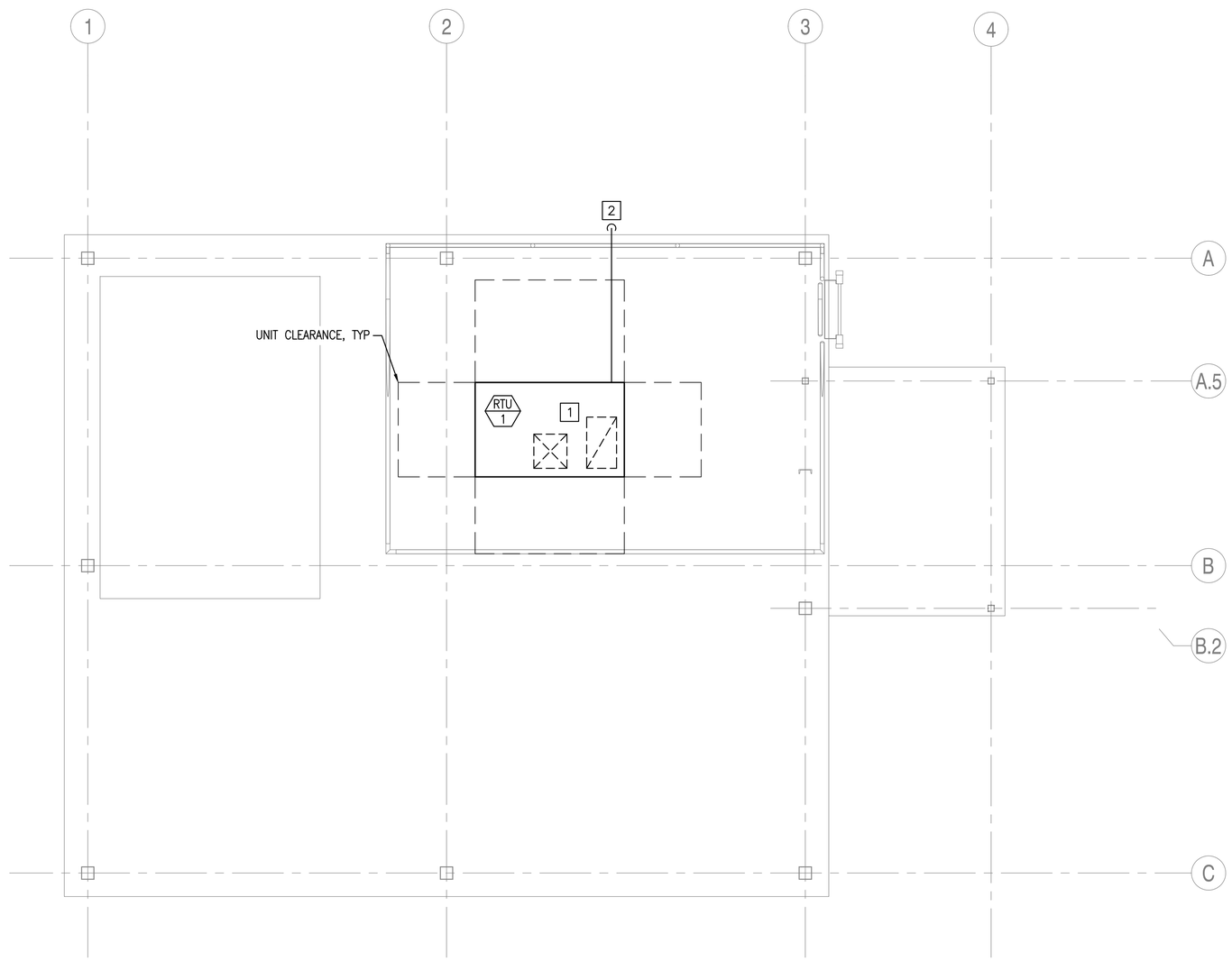

ROOF MECHANICAL PLAN

SCALE: 3/8" = 1'-0"

PLAN NORTH

0 2' 4' 6'
Scale: 3/8" = 1'-0"

SYM	DESCRIPTION	DATE	APPR
0	ISSUED FOR CONSTRUCTION	10/28/2016	CBC

NAVFAC

STATE OF MAINE
PETER W. BROWN
No. 5743
PROFESSIONAL ENGINEER
10/28/16
SEAL

Colby Company engineering
A/E INFO

APPROVED
David W. Krumfeld
FOR COMMANDER NAVFAC

ACTIVITY
TIM FISHER
C. 2370.6 BRANCH HEAD

SATISFACTORY TO DATE 10/28/2016

DES EAF DRW CSS CHK PWB

PMDM PETER STOCKLESS
BRANCH MANAGER IAN BODWELL
FEA/PM&E AMIN BAHROUR
FIRE PROTECTION PATRICK BAKAJ

DEPARTMENT OF THE NAVY
NAVAL FACILITIES ENGINEERING COMMAND
PUBLIC WORKS DEPARTMENT - MAINE

NAVAL FACILITIES ENGINEERING COMMAND ~ MID-ATLANTIC
NAVAL SHIPYARD - PORTSMOUTH, NH

PORTSMOUTH NAVAL SHIPYARD
KITTERY, ME

DRY DOCK #1 DEFUELING COMPLEX
ACE-3

ROOF MECHANICAL PLAN

EPROJECT NO.: 1363311

CONSTR. CONTR. NO.
N40085-17-C-5002

NAVFAC DRAWING NO.
12735248

SHEET 31 OF 43

M-101 DD1-16-1329

DRAWFORM REVISION: 10 OCTOBER 2014

10/28/2016 7:28:31 AM X:\297 PORTSMOUTH NAVAL SHIPYARD\297.005.001 - DD#1 DEFUELING COMPLEX DESIGN\DRAWINGS\ACE3\SHEETS\M-101.DWG

ROOFTOP UNIT SCHEDULE

UNIT NO	LOCATION	SERVES	FAN DATA				COOLING CAPACITY					HEATING CAPACITY			ELECTRIC HEATER CAPACITY				ELECTRICAL DATA					WEIGHT (LBS)	MANUFACTURER AND MODEL (1)	NOTES
			TOTAL CFM	OA CFM	RA CFM	ESP (IN) WG	SENS BTU/HR	TOTAL BTU/HR	EAT °F DB/WB	LAT °F DB/WB	REF	TOTAL BTU/HR	EAT °F	LAT °F	INPUT (MBH)	OUTPUT (MBH)	EAT °F	LAT °F	MCA	MOP	VOLTS	PH	HZ			
RTU-1	ROOF	ACE-3	1,000	100	900	1.0	24,410	36,640	80/67	59.8/55.9	410A	13,040	60	99.8	41	41	60	99.8	29.4	30	480	3	60	514	TRANE WSC036	1-7

NOTES:
1. PROVIDE MANUFACTURER'S SLOPED INSULATED ROOF CURB. SEE A-201.
2. PROVIDE MOTORIZED OUTSIDE AIR DAMPER.
3. PROVIDE EPOXY COATED CONDENSER COIL.
4. PROVIDE BACNET COMMUNICATIONS INTERFACE, WITH BACNET TO ETHERNET CONVERTER.
5. PROVIDE 12 KW BACKUP ELECTRIC HEATER.
6. PROVIDE WITH DP SENSOR FOR SPACE PRESSURE CONTROL AND OUTDOOR AIR DAMPER MODULATION.
7. HEATING CAPACITY SHOWN AT -4 DEG F OUTDOOR AIR TEMPERATURE. HEATING CAPACITY AT 47 DEG F OUTDOOR AIR SHALL BE 41.44 MBH.

DIFFUSER/REGISTER/GRILLE SCHEDULE

UNIT NO	NECK SIZE	MAX PRESSURE DROP (IN WC)	MAX NOISE CRITERIA	CFM RANGE	TYPE/SIZE	MANUFACTURER AND MODEL (1)	NOTES
S-1	10x10	0.07	20	0-250	CEILING/24x24	PRICE AMCD	1,2
R-1	12"ø	0.08	20	0-500	CEILING/24x24	PRICE PDDR	2

NOTES:
1. OPPOSED BLADE DAMPER.
2. ALUMINUM CONSTRUCTION.

KEYED NOTES:

(1) MANUFACTURERS NAME AND MODEL NUMBER ARE USED FOR DESCRIPTIVE PURPOSES ONLY AND ARE INTENDED TO INDICATE THE STANDARD OF MATERIAL OR ARTICLES REQUIRED. DESIGN IS PREDICATED AROUND LISTED MANUFACTURERS AS NOTED ON SCHEDULES AND IS NOT INTENDED TO LIMIT THE CONTRACTOR TO ONE MANUFACTURER.

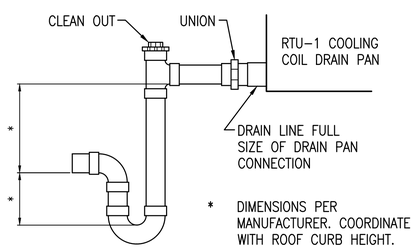

CONDENSATE DRAIN ("P" TRAP) DETAIL (C2)

SCALE: NTS

SEQUENCE OF OPERATION

RTU-1
1. RTU SHALL BE MONITORED AND CONTROLLED THROUGH INTEGRAL CONTROL PANEL.
2. RTU SHALL OPERATE BASED ON A TIME OF DAY SCHEDULE. OCCUPANCY SCHEDULE TO BE DETERMINED BY THE OWNER AND PROGRAMMED INTO THE BAS INTERFACE FOR AUTOMATIC CONTROL.
3. OCCUPIED – WHEN COMMANDED FOR OCCUPIED MODE THE MOTORIZED RA DAMPER SHALL MODULATE OPEN. ONCE DAMPER IS PROVEN OPEN, THE SUPPLY FAN SHALL ENERGIZE AND RUN CONTINUOUSLY. THE RTU SHALL DELIVER A SUPPLY AIR TEMPERATURE OF 55 DEG F (ADJ) IN COOLING MODE AND 99.8 DEG F (ADJ) IN HEATING MODE.
4. UNOCCUPIED – WHEN COMMANDED TO UNOCCUPIED MODE THE FAN SHALL DEENERGIZE AND THE DAMPERS SHALL CLOSE. THE UNIT SHALL ENERGIZE TO CONDITION THE SPACE IF THE SPACE TEMPERATURE MEASURED AT ANY ASSOCIATED THERMOSTAT RISES ABOVE 85 OR BELOW 55F (ADJ).
5. COOLING MODE – IF SPACE TEMPERATURE RISES ABOVE SETPOINT THE HEAT PUMP UNIT SHALL ENERGIZE AND THE COOLING COIL VALVE SHALL MODULATE OPEN TO DECREASE THE DISCHARGE AIR TEMP (DAT) TO MEET SPACE TEMPERATURE SETPOINT. WHILE THE UNIT IS IN COOLING MODE THE ELECTRIC HEATER SHALL BE DISABLED.
6. ECONOMIZER MODE – WHEN THE ENTHALPY OF THE OUTDOOR AIR IS LESS THAN THE ENTHALPY OF THE RETURN AIR, ECONOMIZER MODE SHALL ACT AS THE FIRST STAGE OF COOLING, WORKING IN SEQUENCE WITH THE COOLING COIL. THE DUCT-MOUNTED ECONOMIZER OA AND EA DAMPERS WILL MODULATE OPEN AND THE EXHAUST FAN SHALL BE ENERGIZED. ECONOMIZER MODE WILL BE ENABLED WHEN OA IS BETWEEN 45F AND 65F (ADJ).
7. HEATING MODE – IF SPACE TEMPERATURE DROPS BELOW SETPOINT THE HEAT PUMP AND ELECTRIC HEATER (AS NEEDED TO MAINTAIN SUPPLY AIR TEMP) SHALL OPERATE TO INCREASE THE DAT. WHILE THE UNIT IS IN HEATING MODE THE CONDENSING UNIT SHALL BE DISABLED.
8. PRESSURE CONTROL – PROVIDE A PRESSURE SENSOR TO MEASURE AND CONTROL ROOM PRESSURE. THE OUTDOOR AIR DAMPER MODULATES TO MAINTAIN A ROOM PRESSURE OF POSITIVE 0.05 INCHES OF WATER (ADJ.).
9. PROVIDE EVAPORATOR FROST CONTROL SENSOR LOCATED ON THE INDOOR EVAPORATOR COIL. FROST CONTROL SHALL STOP THE REFRIGERANT COMPRESSOR WHEN THE TEMPERATURE ON THE EVAPORATOR COIL FALLS BELOW 10 DEG. F. THE FROST CONTROL IS RESET WHEN THE TEMPERATURE RISES TO 50 DEG. F.
10. PROVIDE DIFFERENTIAL PRESSURE SENSORS TO MONITOR PRESSURE DROP ACROSS FILTER SECTIONS WITH (ADJUSTABLE) ALARM SETPOINT.

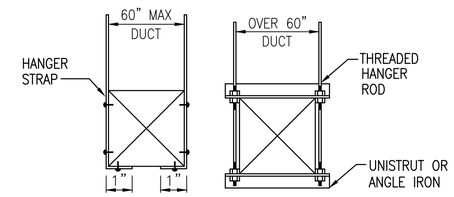

NOTE:
SIZE & RATING OF HANGERS & SUPPORTS SHALL BE PER LATEST "SMACNA" STANDARDS.

DUCT SUPPORT ATTACHMENTS DETAIL (C4)

SCALE: NTS

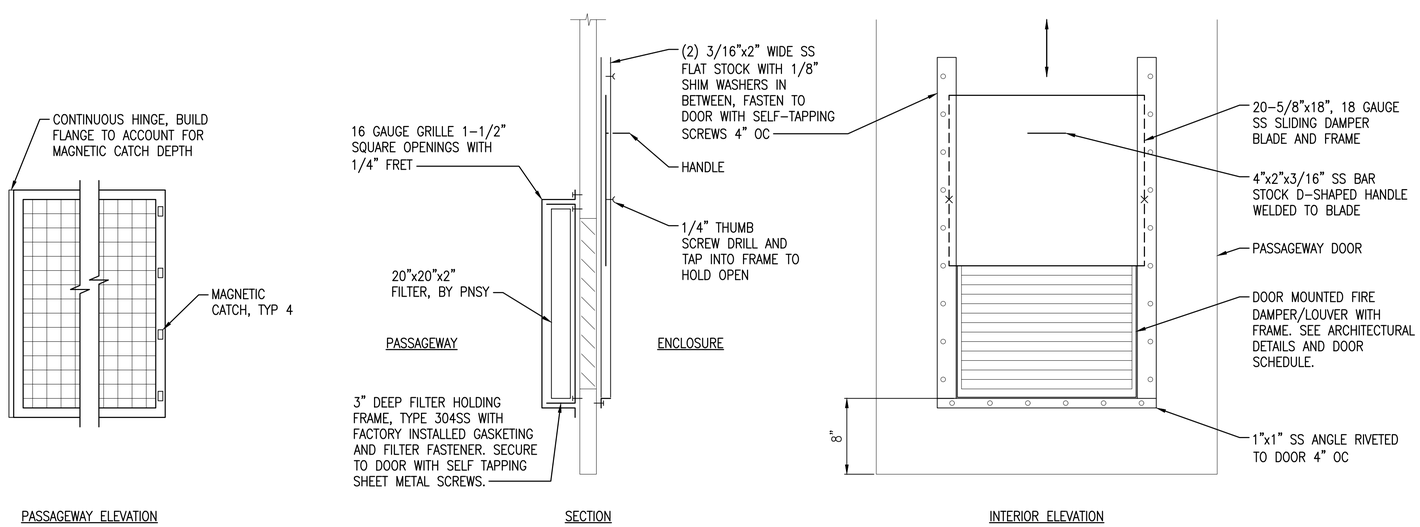

PASSAGEWAY DOOR DAMPER DETAIL (A1)

SCALE: 1/2" = 1'-0"

M-100

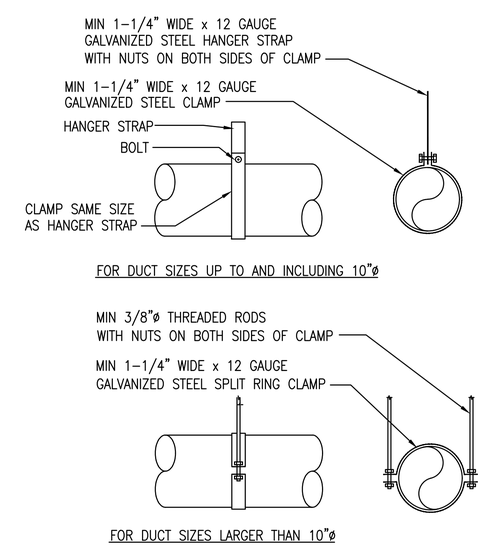

ROUND DUCT HANGER DETAIL (A4)

SCALE: NTS

0 1' 2' 4'
Scale: 1/2" = 1'-0"

SYM	DESCRIPTION	DATE	APPR
0	ISSUED FOR CONSTRUCTION	10/28/2016	CBC

NAVFAC

STATE OF MAINE PETER W. BROWN No. 5743 PROFESSIONAL ENGINEER 10/28/16 SEAL

Colby Company engineering
A/E INFO

APPROVED BY: David W. Grunfeld
FOR COMMANDER NAVFAC

ACTIVITY: TIM FISHER C. 2370.6 BRANCH HEAD
SATISFACTORY TO DATE 10/28/2016
DES EAF DRW CSS CHK PWB
PM/DM PETER STOCKLESS
BRANCH MANAGER IAN BODWELL
FEAD/PM&E AMIN BAHROUR
FIRE PROTECTION PATRICK BAKAJ

DEPARTMENT OF THE NAVY
NAVAL FACILITIES ENGINEERING COMMAND
PUBLIC WORKS DEPARTMENT - MAINE
NAVAL FACILITIES ENGINEERING COMMAND ~ MID-ATLANTIC
NAVAL SHIPYARD - PORTSMOUTH, NH
PORTSMOUTH NAVAL SHIPYARD
KITTERY, ME
DRY DOCK #1 DEFUELING COMPLEX
ACE-3
MECHANICAL DETAILS AND SCHEDULES

EPROJECT NO.: 1363311
CONSTR. CONTR. NO. N40085-17-C-5002
NAVFAC DRAWING NO. 12735249
SHEET 32 OF 43
M-501 DD1-16-1330

DRAWFORM REVISION: 10 OCTOBER 2014

10/28/2016 7:28:35 AM X:\297 PORTSMOUTH NAVAL SHIPYARD\297.005.001 - DD#1 DEFUELING COMPLEX DESIGN\DRAWINGS\ACE3\SHEETS\M-501.DWG

LIGHTING

- 2x4 FLUORESCENT FIXTURE — ASSOCIATED CONTROL DEVICE — FIXTURE TYPE (SEE LIGHT FIXTURE SCHED.)
- FLUORESCENT WRAP AROUND FIXTURE
- WALL MOUNTED FIXTURES
- PORTABLE WORK LIGHT
- EXIT SIGN, CEILING MOUNTED — SHADING INDICATES SIGN FACE — ARROW INDICATES EGRESS DIRECTION
- EXIT SIGN, WALL MOUNTED
- DUAL HEAD EMERGENCY LIGHT BATTERY PACK
- REMOTE EMERGENCY LIGHTING HEAD
- WALLPACK — FIXTURE TYPE (SEE LIGHT FIXTURE SCHED.)
- HOME RUN
- S_3 3-WAY TOGGLE SWITCH
- S_4 4-WAY TOGGLE SWITCH
- S_a SINGLE POLE TOGGLE SWITCH — INDICATES CONTROLLED FIXTURE
- LC LIGHTING CONTACTOR
- TC TIME CLOCK
- FLOOD LIGHT — INDICATES MOUNTING ANGLE (FROM VERTICAL) — FIXTURE TYPE (SEE LIGHT FIXTURE SCHED.)

COMMUNICATIONS

- TELEPHONE SYSTEM WALL JACK
- DATA SYSTEM OUTLET
- COMBINATION VOICE/DATA SYSTEM OUTLET
- SPEAKER, CEILING MOUNTED
  - 1 – FLUSH
  - 2 – SURFACE
  - 3 – HORN
  - 4 – DUAL HORN
- SPEAKER, WALL MOUNTED
- HS INTERCOM SYSTEM HANDS-FREE STATION
- DS INTERCOM SYSTEM DOOR STATION
- CCTV CLOSED CIRCUIT TELEVISION OUTLET, MOUNT 18" AFF UNLESS OTHERWISE NOTED

SECURITY

- IDS INTRUSION DETECTION SYSTEM ALARM POINT
  - DS – MAGNETIC DOOR SWITCH
  - MS – MOTION SENSOR
  - C – CAMERA
- CARD SECURITY SYSTEM CARD READER

POWER

- NON-FUSED SAFETY SWITCH — NEMA ENCLOSURE — AMPERE RATING
- FUSED SAFETY SWITCH, TOP NUMBER INDICATES SWITCH AMPERE RATING, LOWER NUMBER INDICATES FUSE RATING — NEMA ENCLOSURE
- MAGNETIC MOTOR STARTER, FVNR UNLESS INDICATED OTHERWISE — NEMA ENCLOSURE — NEMA SIZE (TYP.)
- ELECTRIC MOTOR, NUMBER INDICATES HORSEPOWER RATING — XP – EXPLOSION PROOF
- CONDUIT TURNING UP
- CONDUIT TURNING DOWN
- DUPLEX RECEPTACLE, NEMA 5-20R
  - E – INSTALLED ON EMERGENCY CIRCUIT
  - IG – ISOLATED GROUND
  - S – SWITCHED RECEPTACLE
- DOUBLE DUPLEX (QUADRUPLEX) RECEPTACLE, NEMA 5-20R
- GFCI DUPLEX RECEPTACLE, NEMA 5-20R — WEATHER PROOF
- POWER RECEPTACLE, 250 VOLT NEMA L6-30R
- POWER RECEPTACLE, 440 VOLT NEMA CONFIGURATION AS NOTED
- DUPLEX RECEPTACLE, NEMA 5-20R, CEILING OUTLET
- PANELBOARD, NORMAL POWER
- PANELBOARD, EMERGENCY POWER
- CB 100A ENCLOSED CIRCUIT BREAKER — AMPERE RATING
- J JUNCTION BOX, SIZE AS REQUIRED
- M MANUAL MOTOR STARTER, TOGGLE OPERATED; MULTIPLE PHASE, 1, 2, OR 3 POLE AS REQUIRED; PROVIDE WITH INTEGRAL OVERLOAD PROTECTION
- W WALL BOX (FLUSH MOUNTED, UNLESS NOTED)
- T TERMINAL BLOCK
- VFD VARIABLE FREQUENCY DRIVE
- PB PUSHBUTTON SWITCH, MOUNTED 48" AFF

SITE/GROUNDING

- COPPER CLAD STEEL GROUND ROD
- EXOTHERMIC WELD CONNECTION
- BARE COPPER CONDUCTOR EXPOSED
- BARE COPPER CONDUCTOR BELOW GRADE
- BARE COPPER CONDUCTOR EMBEDDED IN CONCRETE
- EGB ELECTRICAL SERVICE GROUND BUS
- TGB TELECOMMUNICATIONS GROUNDING BLOCK
- CEE CONCRETE ENCASED ELECTRODE
- UE UNDERGROUND ELECTRIC

LINE TYPES

- EXISTING
- NEW
- DEMOLITION
- MATCHLINE
- PART PLAN OUTLINE

ONE-LINE DIAGRAM

- MOLDED CASE CIRCUIT BREAKER — AMPS
- DISCONNECT, ISOLATION OR SAFETY SWITCH
- FUSED CUTOUT
- FUSED LOAD BREAK SWITCH
- MEDIUM VOLTAGE MOTOR STARTER
- CAPACITOR
- DRAWOUT DEVICE
- GROUND
- FUSE
- POWER TRANSFORMER
  - OA – LIQUID TYPE SELF COOLED
  - AA – DRY TYPE SELF COOLED
  - FA – FAN COOLED
  - CONNECTION (DELTA-WYE)
- MAGNETIC MOTOR STARTER — FVNR UNLESS OTHERWISE NOTED
  - FVR – FULL VOLTAGE REVERSING
  - RVAT – REDUCING VOLTAGE AUTO TRANSFORMER
  - 2S – TWO SPEED
  - NEMA SIZE
- MOTOR, NUMBER INDICATES HORSEPOWER
- METER
  - A – AMMETER
  - HZ – FREQUENCY METER
  - KWH – KILOWATT HOUR
  - KVAR – KILOVAR METER
  - PZ – POWER FACTOR METER
  - V – VOLTMETER
  - VAR – VAR METER
  - W – WATTMETER
  - WH – WATT HOURMETER
- DPM DIGITAL POWER METER
- SPD SURGE PROTECTIVE DEVICE
- PORTABLE CABLE MALE PLUG
- PORTABLE CABLE FEMALE RECEPTACLE
- DISCONNECT INTERLOCKED MALE RECEPTACLE

ABBREVIATIONS

AMP	AMPERE
AFF	ABOVE FINISHED FLOOR
AFG	ABOVE FINISHED GRADE
AHJ	AUTHORITY HAVING JURISDICTION
AIC	AMPERE INTERRUPTING CAPACITY
AWG	AMERICAN WIRE GAUGE
BFG	BELOW FINISHED GRADE
BLDG	BUILDING
BOS	BOTTOM OF STEEL
C	CONDUIT
CATV	CABLE TELEVISION
CB	CIRCUIT BREAKER
CCTV	CLOSED CIRCUIT TELEVISION
CT	CURRENT TRANSFORMER
CU	COPPER
DB	DIRECT BURIED
DISCO	DISCONNECT
DN	DOWN
EMT	ELECTRICAL METALLIC TUBING
EWC	ELECTRIC WATER COOLER
EWH	ELECTRIC WATER HEATER
EQP	EQUIPMENT
EXIST	EXISTING
FAA	FIRE ALARM ANNUNCIATOR
FACP	FIRE ALARM CONTROL PANEL
FBO	FURNISHED BY OTHERS
FLR	FLOOR
FVNR	FULL VOLTAGE NON REVERSING
FWE	FURNISHED WITH EQUIPMENT
FU	FUSE
GEN	GENERATOR
GFCI	GROUND FAULT CIRCUIT INTERRUPT
CLG	CEILING
GND	GROUND
HP	HORSEPOWER
HTR	HEATER
IG	ISOLATED GROUND
IMC	INTERMEDIATE METAL CONDUIT
K	KILO
KA	KILO-AMP
KCMIL	THOUSAND CIRCULAR MILS
KV	KILOVOLT
KVA	KILOVOLT-AMPERE
KW	KILOWATT
KWH	KILOWATT-HOUR
LA	LIGHTNING ARRESTER
LTG	LIGHTING
LFMC	LIQUID-TIGHT FLEXIBLE METAL CONDUIT
MAX	MAXIMUM
MC	METAL CLAD
MCB	MAIN CIRCUIT BREAKER
MFR	MANUFACTURER
MLO	MAIN LUG ONLY
MOP	MAXIMUM OVERCURRENT PROTECTION
MS/TP	MASTER-SLAVE TOKEN-PASSING
MTD	MOUNTED
MV	MEDIUM VOLTAGE
NC	NORMALLY CLOSED
NEC	NATIONAL ELECTRIC CODE
NEG	NEGATIVE
NEUT	NEUTRAL
NIC	NOT IN CONTRACT
NO	NORMALLY OPEN
NTS	NOT TO SCALE
PH	PHASE
PLC	PROGRAMMABLE LOGIC CONTROLLER
PV	PHOTOVOLTAIC
PVC	POLYVINYL CHLORIDE
RM	ROOM
RGS	RIGID GALVANIZED STEEL CONDUIT
RSC	RIGID STEEL CONDUIT
RTU	ROOF TOP UNIT
SWBD	SWITCHBOARD
TGB	TELECOMMUNICATIONS GROUNDING BUSBAR
TOS	TOP OF STEEL
TANSF	TRANSFORMER
TVSS	TRANSIENT VOLTAGE SURGE SUPPRESSOR
TX	TRANSFORMER
V	VOLT
VA	VOLT-AMPERE
VFD	VARIABLE FREQUENCY DRIVE
WM	WATT METER
WP	WEATHER PROOF
XFMR	TRANSFORMER
XP	EXPLOSION PROOF

GENERAL NOTES

1. ALL GENERAL NOTES, SYMBOL LISTS AND DETAILS ARE TO BE CONSIDERED AS APPLICABLE TO ALL ELECTRICAL DRAWINGS FOR THIS PROJECT. SYMBOLS AND ABBREVIATIONS SHOWN ON THIS SHEET ARE FOR REFERENCE ONLY AND DO NOT INDICATE THEIR INCORPORATION IN THE DESIGN.
2. ALL WORK SHALL BE PERFORMED IN ACCORDANCE WITH NFPA-70, NATIONAL ELECTRICAL CODE (NEC) 2014.
3. ALL CONDUCTOR MATERIAL, INCLUDING WIRING, PANELBOARD BUSES, TRANSFORMER WINDINGS, AND GROUNDING SHALL BE COPPER. ALUMINUM CONDUCTORS SHALL NOT BE ALLOWED.
4. UNLESS OTHERWISE NOTED, WIRING SHALL BE 2#12 AWG CONDUCTORS AND #12 GND. HOME RUNS FED FROM 20A-1P CIRCUITS IN EXCESS OF 100 FEET SHALL BE #10 AWG.
5. FLEXIBLE CONNECTIONS TO MOTORS SHALL BE LIQUID TIGHT FLEXIBLE METAL CONDUIT, UNLESS OTHERWISE NOTED.
6. LIGHTING TOGGLE SWITCHES SHALL BE COMMERCIAL SPECIFICATION GRADE 277/120 VOLT, SIDE WIRED AND PROVIDED WITH GROUNDING SCREW. LEVITON, PASS AND SEYMOUR OR APPROVED EQUAL.
7. CONVENIENCE RECEPTACLES SHALL BE COMMERCIAL SPECIFICATION GRADE GROUNDING TYPE NEMA 5-20R, SIDE WIRED. LEVITON, PASS AND SEYMOUR OR APPROVED EQUAL.
8. PROVIDE WALL PLATES FOR ALL WIRING DEVICES. ALL PLATES SHALL BE STAINLESS STEEL.
9. ALL INTERIOR DISTRIBUTION AND BRANCH WIRING SHALL BE 600V, COPPER WITH THHN/THWN INSULATION, UNLESS OTHERWISE NOTED. ALL EXTERIOR DISTRIBUTION AND BRANCH WIRING SHALL BE 600V, COPPER WITH XHHW INSULATION.
10. MOUNT ALL DISCONNECTS AND MOTOR STARTERS IN AN ACCESSIBLE LOCATION WITHIN SIGHT OF THE LOAD SERVED, UNLESS OTHERWISE INDICATED ON PLANS.
11. UNLESS OTHERWISE NOTED CONVENIENCE RECEPTACLES SHALL BE MOUNTED 18-INCHES AFF, PHONE SYSTEM OUTLETS 60-INCHES AFF, INTERCOM SYSTEM OUTLETS 60-INCHES AFF, AND LIGHTING TOGGLE SWITCHES 48-INCHES AFF.
12. ALL PENETRATIONS THROUGH FLOORS, RATED WALLS AND PARTITIONS SHALL BE SEALED WITH UL APPROVED FIRE SEALANT MATERIAL TO MAINTAIN THE RATING OF SEPARATION.
13. COORDINATE ALL EQUIPMENT CONNECTIONS – INCLUDING DISCONNECTING MEANS, OVERCURRENT PROTECTION, AND WIRE SIZING – WITH SELECTED MANUFACTURERS' RECOMMENDED INSTRUCTIONS.
14. PROVIDE ALL MOUNTING HARDWARE NECESSARY FOR A COMPLETE INSTALLATION. MOUNT EQUIPMENT AND ROUTE CONDUIT SO AS NOT TO INTERFERE WITH OPERATIONS SUCH AS DOOR SWINGS, MECHANICAL EQUIPMENT, ETC.
15. MANUFACTURERS NAME AND MODEL NUMBERS ARE USED THROUGHOUT THE PROJECT FOR DESCRIPTIVE PURPOSES ONLY AND ARE INTENDED TO INDICATE THE STANDARD OF MATERIAL OR ARTICLES REQUIRED. DESIGN IS PREDICATED AROUND LISTED MANUFACTURERS AS NOTED ON SCHEDULES AND NOTES AND IS NOT INTENDED TO LIMIT THE CONTRACTOR TO ONE MANUFACTURER.
16. CONTRACTOR SHALL LABEL ALL ELECTRICAL INFRASTRUCTURE INCLUDING PANELBOARDS, DISCONNECTS, JUNCTION BOXES, RECEPTACLES, TRANSFORMERS, AND CONTROL BOXES IN ACCORDANCE WITH THE PROJECT DRAWINGS, PROJECT SPECIFICATIONS, AND PNS LABELING STANDARDS. LABELING SHALL CONSIST OF EQUIPMENT, POWER SOURCE, POWER FEED, ARC-FLASH REQUIREMENTS, AND CLEARANCE REQUIREMENTS AT A MINIMUM.
17. ALL EXTERIOR ELECTRICAL BOXES SHALL BE WIRED WITH A DRIP LOOP TO PREVENT WATER INFILTRATION INTO THE BOXES. FOR ALL LOCATIONS WHERE POSSIBLE, ENTRY INTO THE BOXES SHALL BE FROM/TO THE BOTTOM OF THE ELECTRICAL BOXES. WHERE BOTTOM ENTRY NOT POSSIBLE, A MEANS OF WEATHER PROTECTION SHALL BE PROVIDED.
18. ALL SECURITY SYSTEM CARD READERS, SURVEILLANCE CAMERAS, AND MOTION SENSORS SHALL BE INSTALLED AND WIRED BY THE GOVERNMENT. CONTRACTOR SHALL PROVIDE PATHWAYS WITH PULL STRINGS TO THE ACE FOR ALL DEVICE WIRING. CONTRACTOR SHALL PROVIDE AND INSTALL DOOR MAGNETIC SWITCHES, WIRE THEM, THEN RUN THE WIRES TO THE SECURITY CONNECTION POINT IN ACE-3, WHERE THEY WILL BE CONNECTED BY THE GOVERNMENT.

SYM	DESCRIPTION	DATE	APPR
0	ISSUED FOR CONSTRUCTION	10/28/2016	CBC

NAVFAC

STATE OF MAINE — JASON M. BEAULIEU No. 13441 — LICENSED PROFESSIONAL ENGINEER — 10/28/16 — SEAL

Colby Company engineering — A/E INFO

APPROVED: David W. Grunfeld — FOR COMMANDER NAVFAC

ACTIVITY: TIM FISHER, C. 2370.6 BRANCH HEAD

SATISFACTORY TO — DATE 10/28/2016

DES JMB | DRW JMB | CHK MRL

PM/DM PETER STOCKLESS

BRANCH MANAGER IAN BODWELL

FEAD/PM&E AMIN BAHROUR

FIRE PROTECTION PATRICK BAKAJ

DEPARTMENT OF THE NAVY — NAVAL FACILITIES ENGINEERING COMMAND — NAVAL FACILITIES ENGINEERING COMMAND ~ MID-ATLANTIC

PUBLIC WORKS DEPARTMENT - MAINE — NAVAL SHIPYARD - PORTSMOUTH, NH

PORTSMOUTH NAVAL SHIPYARD — KITTERY, ME

DRY DOCK #1 DEFUELING COMPLEX — ACE-3

ELECTRICAL LEGEND, ABBREVIATIONS AND GENERAL NOTES

EPROJECT NO.: 1363311

CONSTR. CONTR. NO. N40085-17-C-5002

NAVFAC DRAWING NO. 12735250

SHEET 33 OF 43

E-001 | DD1-16-1331

DRAWFORM REVISION: 10 OCTOBER 2014

10/28/2016 7:28:39 AM X:\297 PORTSMOUTH NAVAL SHIPYARD\297.005.001 - DD#1 DEFUELING COMPLEX DESIGN\DRAWINGS\ACE3\SHEETS\E-001.DWG

CIRCUIT SCHEDULE

1. ACE-3 PANEL 2 #1
2. ACE-3 PANEL 2 #3
3. ACE-3 PANEL 2 #5
4. ACE-3 PANEL 2 #7
5. ACE-3 PANEL 2 #9
6. ACE-3 PANEL 2 #11
7. ACE-3 PANEL 2 #13
8. ACE-3 PANEL 2 #20,22
9. ACE-3 PANEL 2 #24,26
10. ACE-3 PANEL 2 #2
11. ACE-3 PANEL 2 #18
12. ACE-3 PANEL 2 #28
13. ACE-3 PANEL 2 #30
14. ACE-3 PANEL 2 #32
15. ACE-3 PANEL 2 #19

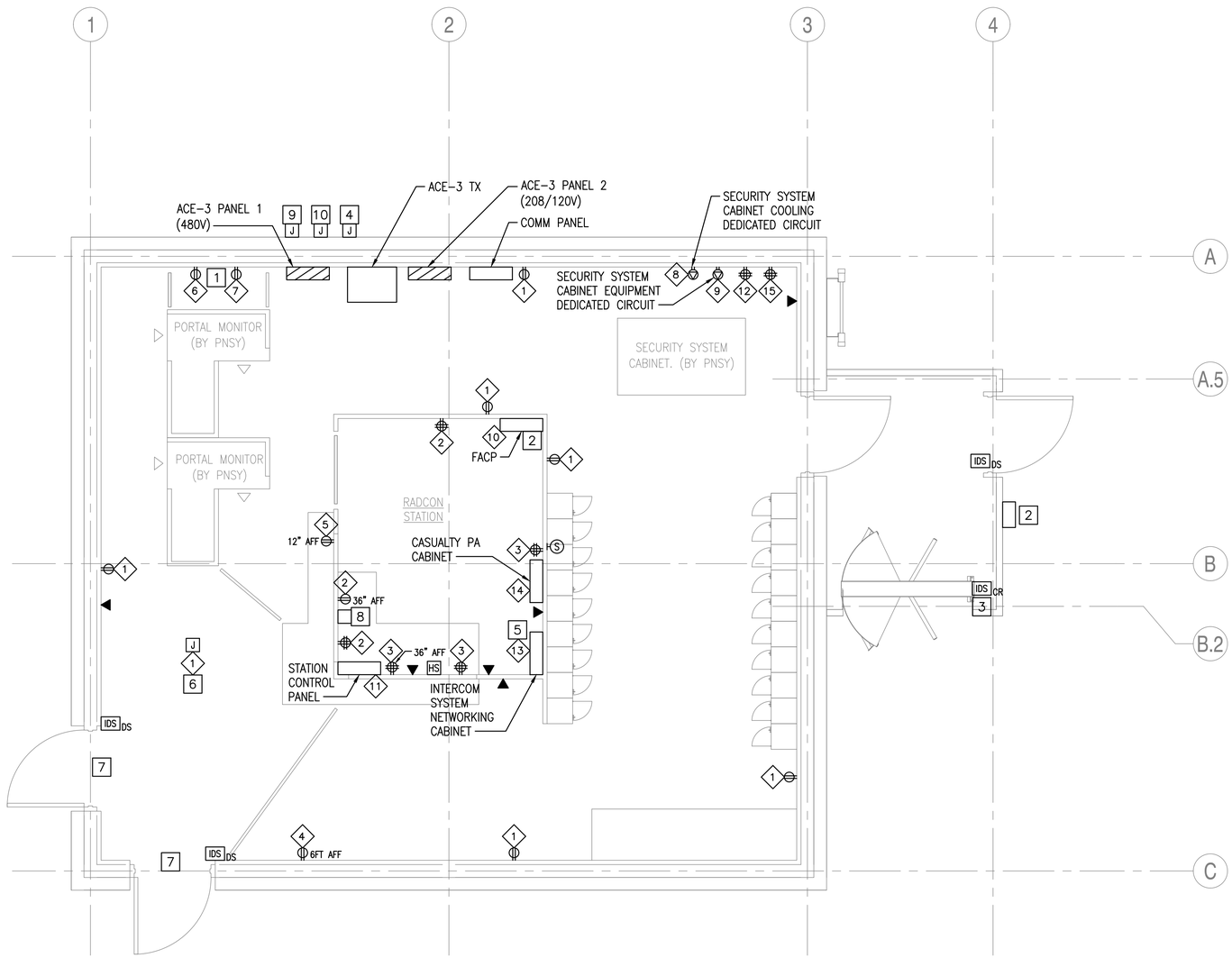

GROUND LEVEL POWER AND SYSTEMS PLAN

SCALE: 3/8" = 1'-0"

PLAN NORTH

Scale: 3/8" = 1'-0"

NOTES

1. SEE SHEET E-001 FOR LEGEND, ABBREVIATIONS AND GENERAL NOTES.

KEYED NOTES

1. PROVIDE DEDICATED CIRCUIT RECEPTACLES FOR EACH PORTAL MONITOR.
2. PROVIDE POWER TO FACP AND FAA. COORDINATE LOCATION AND REQUIREMENTS WITH FIRE ALARM CONTRACTOR.
3. PROVIDE LFMC FROM CARD READER GANG BOX TO JUNCTION BOX WITHIN ENCLOSURE.
4. UNDERGROUND SERVICE ENTRANCE FROM M-140 COMPLEX. SEE SITE & FOUNDATIONS DRAWINGS PACKAGE FOR DETAILS ON UNDERGROUND CONDUIT LOCATIONS. PROVIDE JUNCTION BOX WITH LUGS FOR SERVICE CONNECTION.
5. PROVIDE RECEPTACLE INSIDE PA SYSTEM NETWORKING CABINET.
6. PROVIDE CEILING MOUNTED JUNCTION BOX WITH CIRCUIT DEAD ENDED FOR USE BY OWNER SUPPLIED AND INSTALLED EQUIPMENT. INSTALL OUTSIDE OF REMOVABLE PORTION OF CEILING GRID. SEE SHEET A-102 FOR REFLECTED CEILING PLAN.
7. PROVIDE (3) 2" CONDUIT SLEEVES THROUGH WALL INTO PASSAGEWAY AT 90" AFF.
8. PROVIDE CONTROLS FOR ACCESS CONTROL POINTS IN COMPLEX. CONTROLS SHALL CONSIST OF PUSH BUTTONS TO RELEASE MAGNETIC DOOR LOCKS. SEE OTHER ENCLOSURE PACKAGES FOR MAGNETIC DOOR LOCK LOCATIONS.
9. TERMINAL BOX FOR UNDERGROUND SERVICES TO RAE STORAGE LOCATION. SERVICES INCLUDE POWER, PHONE, INTERCOM AND CASUALTY PA. SEE SITE & FOUNDATIONS DRAWINGS FOR DETAILS ON UNDERGROUND CONDUIT LOCATIONS.
10. PROVIDE TERMINAL BOXES FOR UNDERGROUND SERVICES TO RAE OPERATING LOCATION. SERVICES INCLUDE POWER, PHONE, INTERCOM AND CASUALTY PA. SEE SITE & FOUNDATIONS DRAWINGS FOR DETAILS ON UNDERGROUND CONDUIT LOCATIONS.

SYM	DESCRIPTION	DATE	APPR
0	ISSUED FOR CONSTRUCTION	10/28/2016	CBC

NAVFAC

STATE OF MAINE JASON M. BEAULIEU No. 13441 LICENSED PROFESSIONAL ENGINEER 10/28/16 SEAL

Colby Company engineering

A/E INFO

APPROVED Daniel W. Krumfuehl FOR COMMANDER NAVFAC

ACTIVITY TIM FISHER C. 2370.6 BRANCH HEAD

SATISFACTORY TO DATE 10/28/2016

DES JMB DRW JMB CHK MRL

PM/DM PETER STOCKLESS

BRANCH MANAGER IAN BODWELL

FEAD/PM&E AMIN BAHROUR

FIRE PROTECTION PATRICK BAKAJ

DEPARTMENT OF THE NAVY
NAVAL FACILITIES ENGINEERING COMMAND
PUBLIC WORKS DEPARTMENT - MAINE

NAVAL FACILITIES ENGINEERING COMMAND ~ MID-ATLANTIC
NAVAL SHIPYARD - PORTSMOUTH, NH

PORTSMOUTH NAVAL SHIPYARD
KITTERY, ME

DRY DOCK #1 DEFUELING COMPLEX
ACE-3

GROUND LEVEL POWER AND SYSTEMS PLAN

EPROJECT NO.: 1363311

CONSTR. CONTR. NO. N40085-17-C-5002

NAVFAC DRAWING NO. 12735251

SHEET 34 OF 43

EP-100 | DD1-16-1332

DRAWFORM REVISION: 10 OCTOBER 2014

10/28/2016 7:28:44 AM X:\297 PORTSMOUTH NAVAL SHIPYARD\297.005.001 - DD#1 DEFUELING COMPLEX DESIGN\DRAWINGS\ACE3\SHEETS\EP-100.DWG

CIRCUIT SCHEDULE

1. ACE-3 PANEL 1 #2,4,6
2. ACE-3 PANEL 2 #8

NOTES

1. SEE SHEET E-001 FOR LEGEND, ABBREVIATIONS AND GENERAL NOTES.
2. SEE MECHANICAL SHEETS FOR EQUIPMENT DETAILS AND EXACT LOCATIONS.

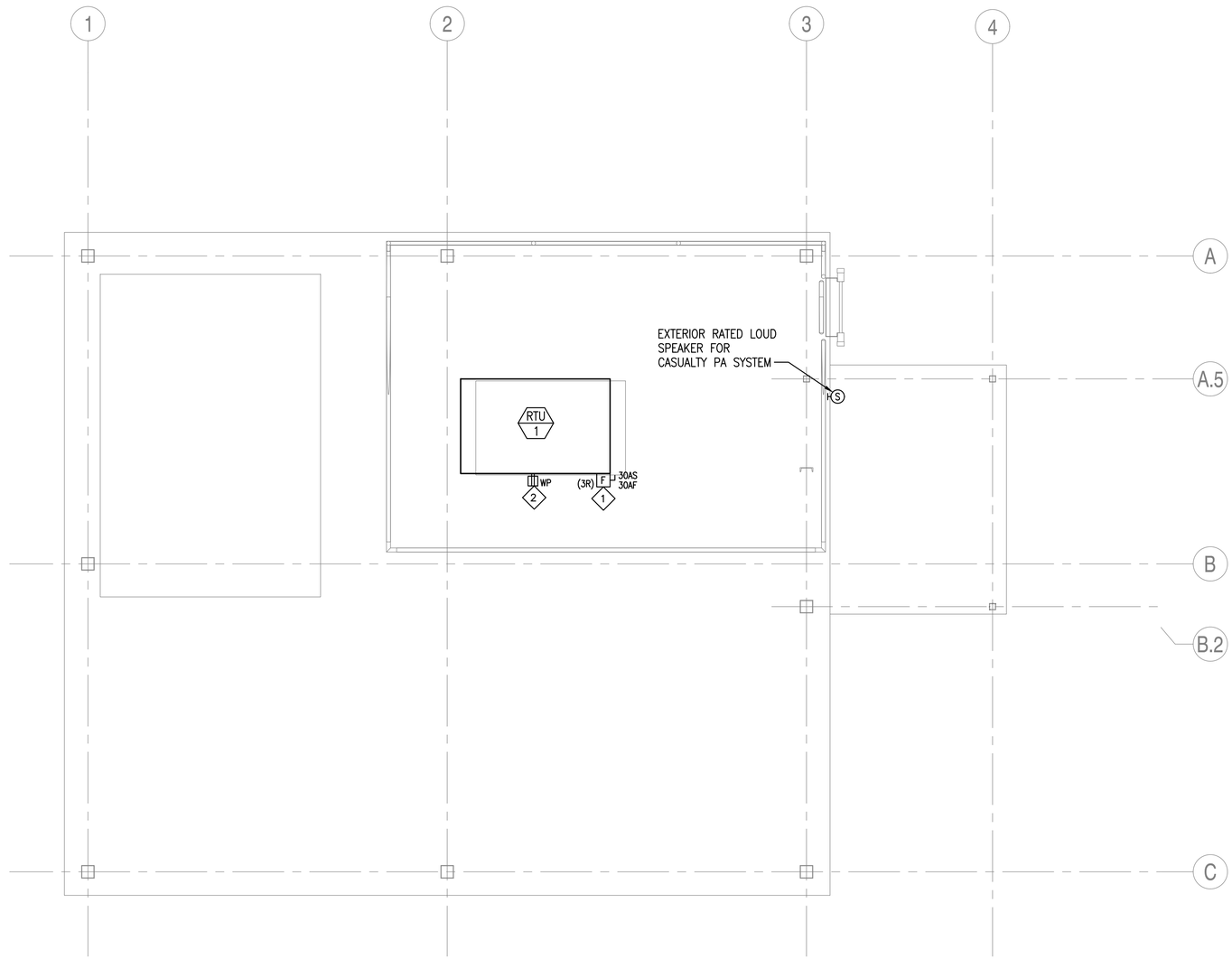

ROOF POWER PLAN

SCALE: 3/8" = 1'-0"

PLAN NORTH

0 2' 4' 6'
Scale: 3/8" = 1'-0"

SYM	DESCRIPTION	DATE	APPR
0	ISSUED FOR CONSTRUCTION	10/28/2016	CBC

NAVFAC

STATE OF MAINE
JASON M. BEAULIEU
No. 13441
LICENSED
PROFESSIONAL ENGINEER
10/28/16
SEAL

Colby Company engineering
A/E INFO

APPROVED
David W. Grunfeld
FOR COMMANDER NAVFAC

ACTIVITY
TIM FISHER
C. 2370.6 BRANCH HEAD

SATISFACTORY TO DATE 10/28/2016

DES	JMB	DRW	JMB	CHK	MRL

PM/DM PETER STOCKLESS
BRANCH MANAGER IAN BODWELL
FEA/PM&E AMIN BAHROUR
FIRE PROTECTION PATRICK BAKAJ

DEPARTMENT OF THE NAVY
NAVAL FACILITIES ENGINEERING COMMAND
PUBLIC WORKS DEPARTMENT - MAINE
NAVAL FACILITIES ENGINEERING COMMAND ~ MID-ATLANTIC
NAVAL SHIPYARD - PORTSMOUTH NH
PORTSMOUTH NAVAL SHIPYARD
KITTERY, ME
DRY DOCK #1 DEFUELING COMPLEX
ACE-3
ROOF POWER PLAN

EPROJECT NO.: 1363311
CONSTR. CONTR. NO. N40085-17-C-5002
NAVFAC DRAWING NO. 12735252
SHEET 35 OF 43
EP-101 DD1-16-1333

DRAWFORM REVISION: 10 OCTOBER 2014

10/28/2016 7:28:48 AM X:\297 PORTSMOUTH NAVAL SHIPYARD\297.005.001 - DD#1 DEFUELING COMPLEX DESIGN\DRAWINGS\ACE3\SHEETS\EP-101.DWG

CIRCUIT SCHEDULE

1. ACE-3 PANEL 2 #15
2. ACE-3 PANEL 2 #17

NOTES

1. SEE SHEET E-001 FOR LEGEND, ABBREVIATIONS AND GENERAL NOTES.
2. SEE SHEET E-601 FOR LIGHTING FIXTURE SCHEDULE.

KEYED NOTES

1. PROVIDE 10FT OF FLEXIBLE FIXTURE WHIP FOR FIXTURES OVER PORTAL MONITORS FOR TEMPORARY MOVEMENT OF FIXTURES DURING PORTAL MONITOR REMOVAL.

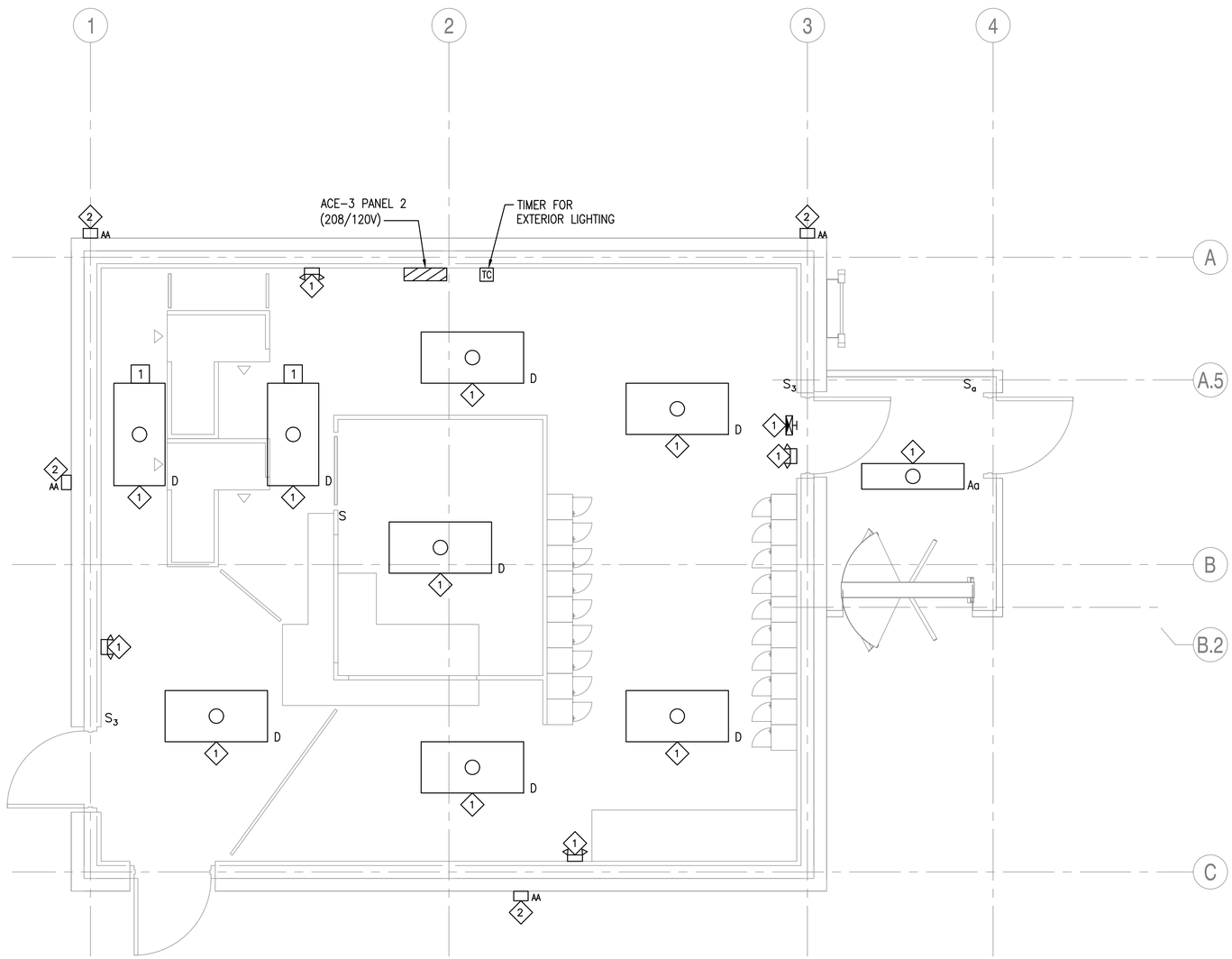

GROUND LEVEL LIGHTING PLAN

SCALE: 3/8" = 1'-0"

PLAN NORTH

0 2' 4' 6'
Scale: 3/8" = 1'-0"

SYM	DESCRIPTION	DATE	APPR
0	ISSUED FOR CONSTRUCTION	10/28/2016	CBC

NAVFAC

STATE OF MAINE
JASON M. BEAULIEU
No. 13441
LICENSED PROFESSIONAL ENGINEER
10/28/16
SEAL

Colby Company engineering
A/E INFO

APPROVED
FOR COMMANDER NAVFAC

ACTIVITY
TIM FISHER
C. 2370.6 BRANCH HEAD

SATISFACTORY TO DATE 10/28/2016

DES	JMB	DRW	JMB	CHK	MRL

PM/DM PETER STOCKLESS
BRANCH MANAGER IAN BODWELL
FEAD/PM&E AMIN BAHROUR
FIRE PROTECTION PATRICK BAKAJ

DEPARTMENT OF THE NAVY
NAVAL FACILITIES ENGINEERING COMMAND ~ MID-ATLANTIC
PUBLIC WORKS DEPARTMENT - MAINE
NAVAL FACILITIES ENGINEERING COMMAND
NAVAL SHIPYARD - PORTSMOUTH, NH
PORTSMOUTH NAVAL SHIPYARD
KITTERY, ME
DRY DOCK #1 DEFUELING COMPLEX
ACE-3
GROUND LEVEL LIGHTING PLAN

EPROJECT NO.: 1363311
CONSTR. CONTR. NO. N40085-17-C-5002
NAVFAC DRAWING NO. 12735253
SHEET 36 OF 43
EL-100 DD1-16-1334

DRAWFORM REVISION: 10 OCTOBER 2014

10/28/2016 7:28:53 AM X:\297 PORTSMOUTH NAVAL SHIPYARD\297.005.001 - DD#1 DEFUELING COMPLEX DESIGN\DRAWINGS\ACE3\SHEETS\EL-100.DWG

NOTES

1. SEE SHEET E-001 FOR LEGEND, ABBREVIATIONS AND GENERAL NOTES.

CABLE SCHEDULE

1. (3) #3 AWG, (1) #8 GND, IN 1" C
2. (3) #8 AWG, (1) #10 GND, IN 3/4" C
3. (3) #10 AWG, (1) #10 GND, IN 3/4" C
4. (4) #2 AWG, (1) #8 GND, IN 1-1/2" C

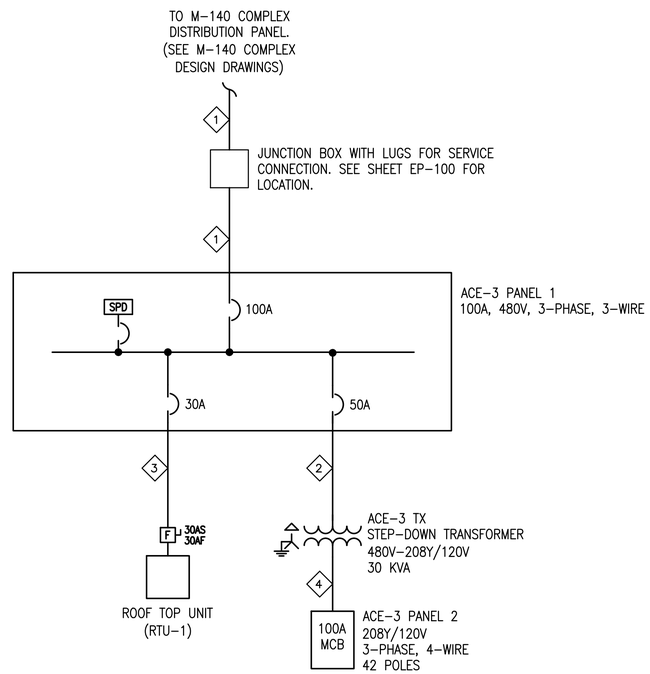

ONE-LINE DIAGRAM - CRITICAL LOADS (A1)

SCALE: NTS

SYM	DESCRIPTION	DATE	APPR
0	ISSUED FOR CONSTRUCTION	10/28/2016	CBC

NAVFAC

STATE OF MAINE
JASON M. BEAULIEU
No. 13441
LICENSED PROFESSIONAL ENGINEER
10/28/16
SEAL

Colby Company engineering
A/E INFO

APPROVED
FOR COMMANDER NAVFAC

ACTIVITY
TIM FISHER
C. 2370.6 BRANCH HEAD

SATISFACTORY TO DATE 10/28/2016

DES	JMB	DRW	JMB	CHK	MRL

PMDM	PETER STOCKLESS
BRANCH MANAGER	IAN BODWELL
FEA/DPM&E	AMIN BAHROUR
FIRE PROTECTION	PATRICK BAKAJ

DEPARTMENT OF THE NAVY
NAVAL FACILITIES ENGINEERING COMMAND ~ MID-ATLANTIC
PUBLIC WORKS DEPARTMENT, MAINE
NAVAL FACILITIES ENGINEERING COMMAND
NAVAL SHIPYARD, PORTSMOUTH, NH
PORTSMOUTH NAVAL SHIPYARD
KITTERY, ME
DRY DOCK #1 DEFUELING COMPLEX
ACE-3
ELECTRICAL DIAGRAMS - CRITICAL LOADS

EPROJECT NO.: 1363311

CONSTR. CONTR. NO.
N40085-17-C-5002

NAVFAC DRAWING NO.
12735254

SHEET 37 OF 43

E-501 | DD1-16-1335

DRAWFORM REVISION: 10 OCTOBER 2014

10/28/2016 7:28:57 AM X:\297 PORTSMOUTH NAVAL SHIPYARD\297.005.001 - DD#1 DEFUELING COMPLEX DESIGN\DRAWINGS\ACE3\SHEETS\E-501.DWG

NOTES

1. SEE SHEET E-001 FOR LEGEND, ABBREVIATIONS AND GENERAL NOTES.

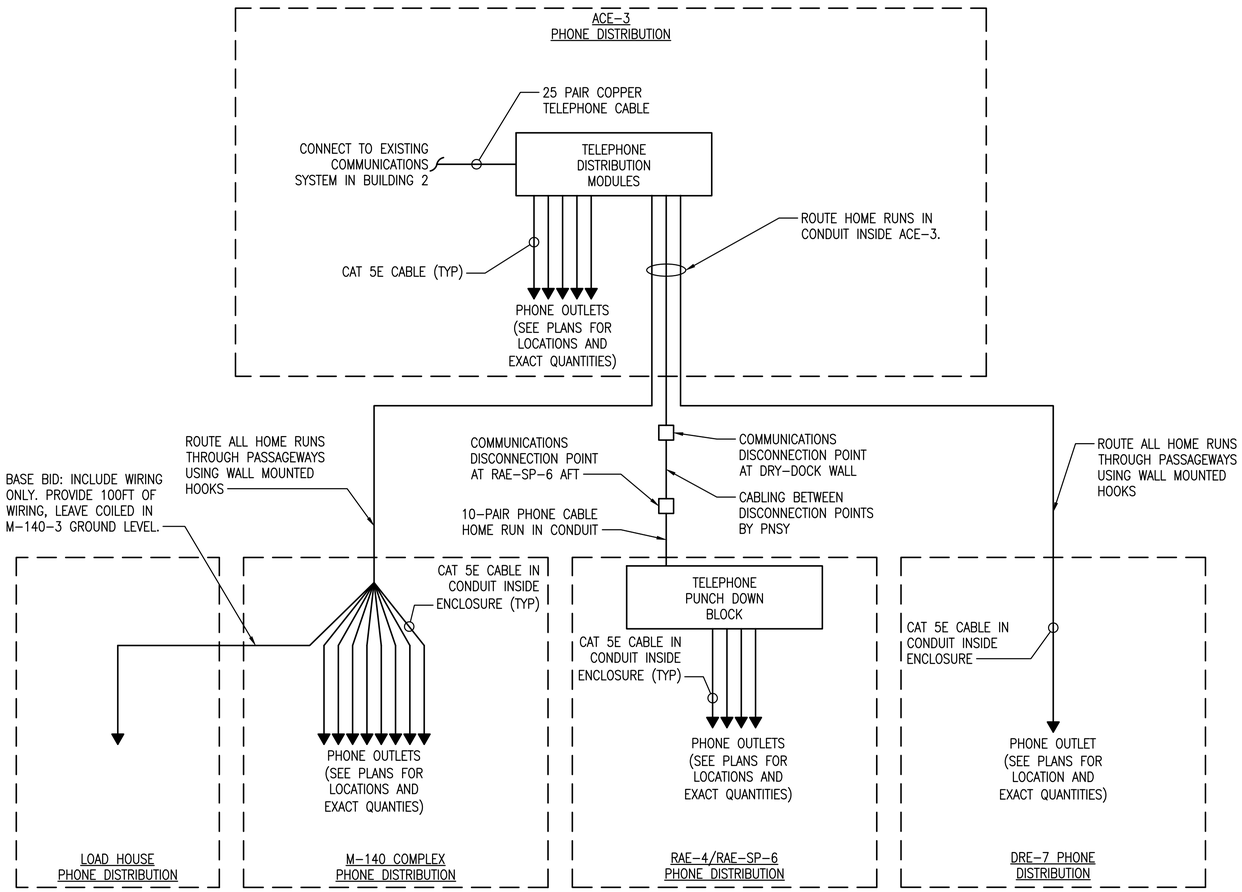

COMMUNICATIONS RISER DIAGRAM (B1)
SCALE: NTS

SYM	DESCRIPTION	DATE	APPR
0	ISSUED FOR CONSTRUCTION	10/28/2016	CBC

NAVFAC

STATE OF MAINE
JASON M. BEAULIEU
No. 13441
LICENSED PROFESSIONAL ENGINEER
10/28/16
SEAL

Colby Company engineering
A/E INFO

APPROVED
David W. Greenfield
FOR COMMANDER NAVFAC

ACTIVITY
TIM FISHER
C. 2370.6 BRANCH HEAD

SATISFACTORY TO DATE 10/28/2016
DES JMB DRW JMB CHK MRL
PMOM PETER STOCKLESS
BRANCH MANAGER IAN BODWELL
FEA/DPM&E AMIN BAHROUR
FIRE PROTECTION PATRICK BAKAJ

DEPARTMENT OF THE NAVY
NAVAL FACILITIES ENGINEERING COMMAND
PUBLIC WORKS DEPARTMENT - MAINE
NAVAL FACILITIES ENGINEERING COMMAND ~ MID-ATLANTIC
NAVAL SHIPYARD - PORTSMOUTH, NH
PORTSMOUTH NAVAL SHIPYARD
KITTERY, ME
DRY DOCK #1 DEFUELING COMPLEX
ACE-3
ELECTRICAL COMMUNICATIONS RISER DIAGRAM

EPROJECT NO.: 1363311
CONSTR. CONTR. NO. N40085-17-C-5002
NAVFAC DRAWING NO. 12735255
SHEET 38 OF 43
E-502 DD1-16-1336

DRAWFORM REVISION: 10 OCTOBER 2014

10/28/2016 7:29:01 AM X:\297 PORTSMOUTH NAVAL SHIPYARD\297.005.001 - DD#1 DEFUELING COMPLEX DESIGN\DRAWINGS\ACE3\SHEETS\E-502.DWG

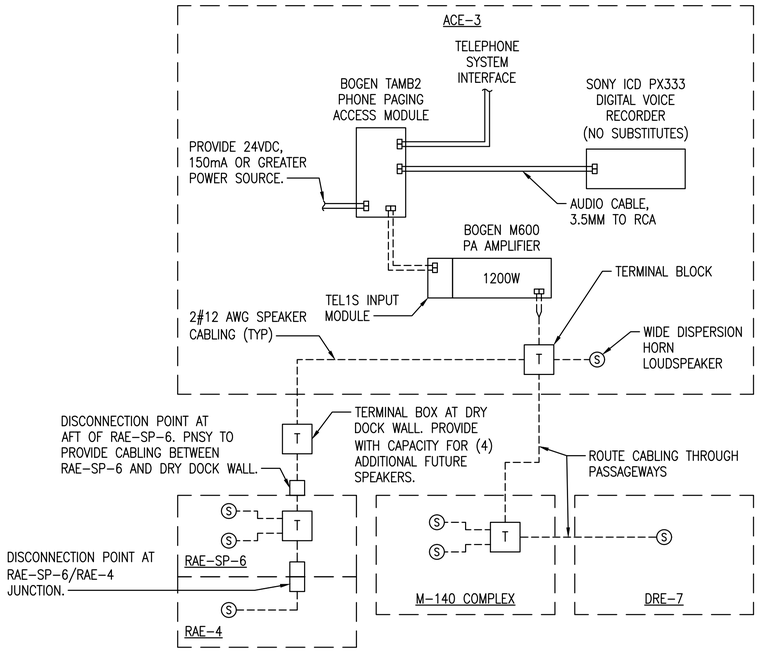

CASUALTY PA SCHEMATIC (C1)

SCALE: NTS

CASUALTY PA NOTES:

1. ALL CABLING SHALL BE RUN IN CONDUIT WITH EXCEPTION OF CABLING BETWEEN ENCLOSURES LOCATED INSIDE PASSAGEWAYS. PASSAGEWAY CABLING SHALL BE EXPOSED AND SUPPORTED FROM HOOKS INSTALLED

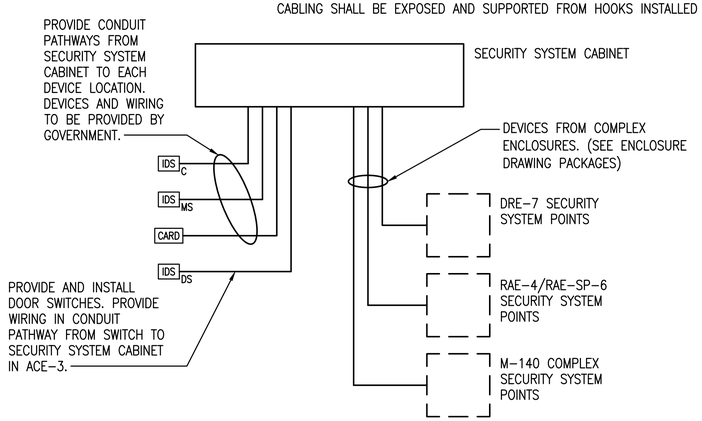

SECURITY SCHEMATIC (A1)

SCALE: NTS

SECURITY NOTES:

1. THIS SCHEMATIC IS FOR REQUIRED SYSTEM COMPONENT ILLUSTRATION ONLY. REFER TO FLOOR PLANS FOR ALL DEVICE QUANTITIES.
2. ALL CABLING SHALL BE RUN IN CONDUIT WITH EXCEPTION OF CABLING BETWEEN ENCLOSURES LOCATED INSIDE PASSAGEWAYS. PASSAGEWAY CABLING SHALL BE EXPOSED AND SUPPORTED FROM HOOKS INSTALLED IN PASSAGEWAYS.
3. ALL SECURITY SYSTEM WIRING AND CONNECTIONS SHALL BE PROTECTED FROM TAMPERING. CONDUIT SHALL NOT HAVE ACCESS COVERS.
4. JUNCTION BOXES AND WIRING FOR ALL SECURITY SYSTEM SHALL BE LOCATED INSIDE THE FACILITY.
5. MINIMIZE THE USE OF JUNCTION BOXES. ALL JUNCTION BOXES SHALL BE PROVIDED WITH A TAMPER SWITCH. SEE SECURITY SWITCH WIRING DIAGRAM (THIS SHEET).

DOOR STATE	TAMPER STATE	MAGNETIC SWITCH	CIRCUIT RESISTANCE
OPEN	SHUT	CLOSED	500 OHMS
SHUT	SHUT	OPEN	1K OHMS
OPEN	OPEN	CLOSED	INFINITY
SHUT	OPEN	OPEN	INFINITY

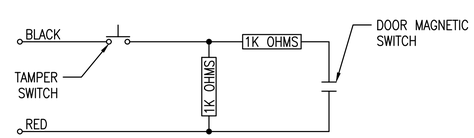

MAN DOOR WIRING DIAGRAM

SECURITY SWITCH WIRING DIAGRAM (A2)

SCALE: NTS

NOTES

1. SEE SHEET E-001 FOR LEGEND, ABBREVIATIONS AND GENERAL NOTES.

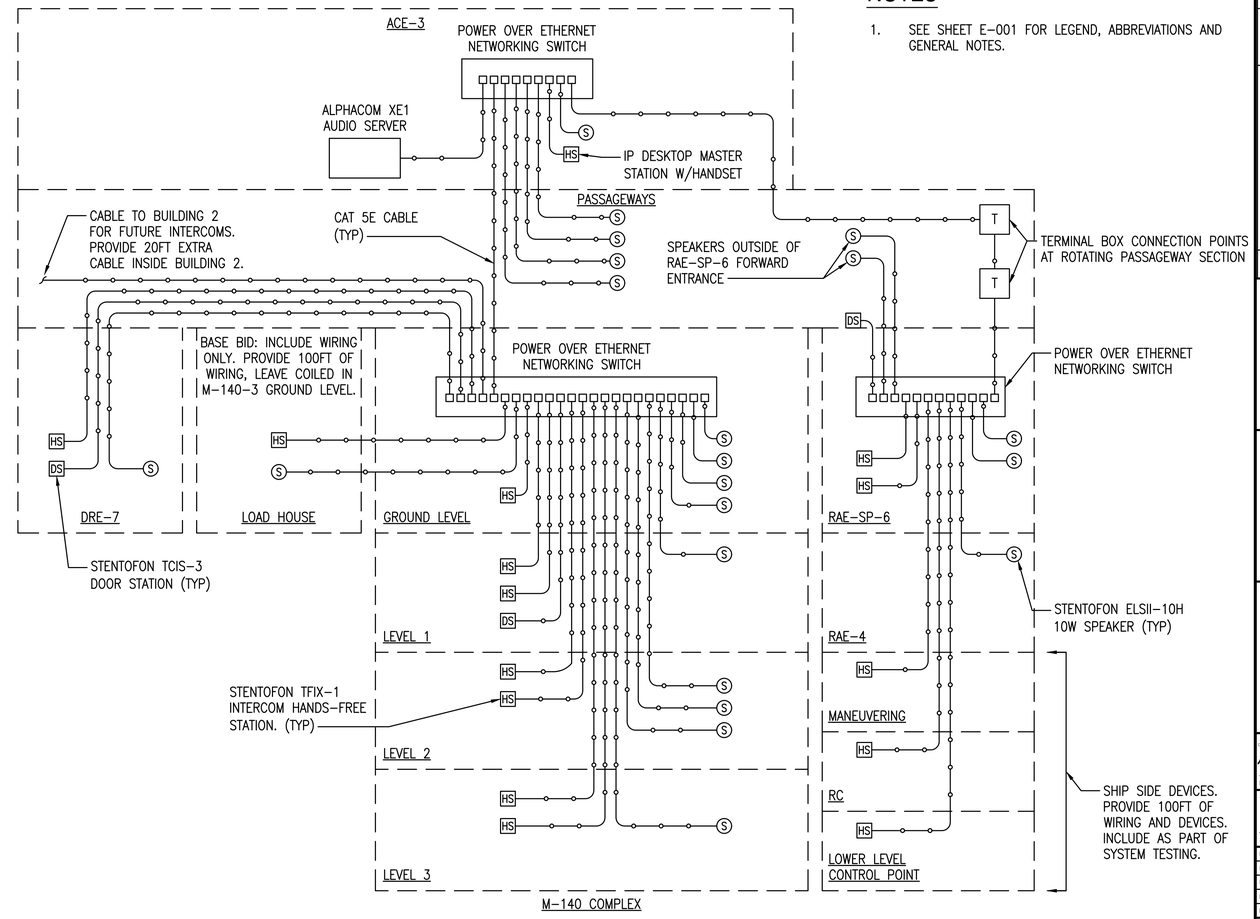

INTERCOM SCHEMATIC (B3)

SCALE: NTS

INTERCOM NOTES:

1. ALL CABLING SHALL BE RUN IN CONDUIT WITH EXCEPTION OF CABLING BETWEEN ENCLOSURES LOCATED INSIDE PASSAGEWAYS. PASSAGEWAY CABLING SHALL BE EXPOSED AND SUPPORTED FROM HOOKS INSTALLED IN PASSAGEWAYS.

SYM	DESCRIPTION	DATE	APPR
0	ISSUED FOR CONSTRUCTION	10/28/2016	CBC

NAVFAC

STATE OF MAINE JASON M. BEAULIEU No. 13441 LICENSED PROFESSIONAL ENGINEER 10/28/16 SEAL

Colby Company engineering A/E INFO

APPROVED David W. Brunfeldt FOR COMMANDER NAVFAC

ACTIVITY TIM FISHER C. 2370.6 BRANCH HEAD

SATISFACTORY TO DATE 10/28/2016

DES JMB DRW JMB CHK MRL

PMOM PETER STOCKLESS

BRANCH MANAGER IAN BODWELL

FEAD/PM&E AMIN BAHROUR

FIRE PROTECTION PATRICK BAKAJ

DEPARTMENT OF THE NAVY NAVAL FACILITIES ENGINEERING COMMAND PUBLIC WORKS DEPARTMENT - MAINE

NAVAL FACILITIES ENGINEERING COMMAND ~ MID-ATLANTIC NAVAL SHIPYARD - PORTSMOUTH, NH

PORTSMOUTH NAVAL SHIPYARD KITTERY, ME

DRY DOCK #1 DEFUELING COMPLEX ACE-3

ELECTRICAL SCHEMATICS

EPROJECT NO.: 1363311

CONSTR. CONTR. NO. N40085-17-C-5002

NAVFAC DRAWING NO. 12735256

SHEET 39 OF 43

E-503 DD1-16-1337

DRAWFORM REVISION: 10 OCTOBER 2014

10/28/2016 7:29:05 AM X:\297 PORTSMOUTH NAVAL SHIPYARD\297.005.001 - DD#1 DEFUELING COMPLEX DESIGN\DRAWINGS\ACE3\SHEETS\E-503.DWG

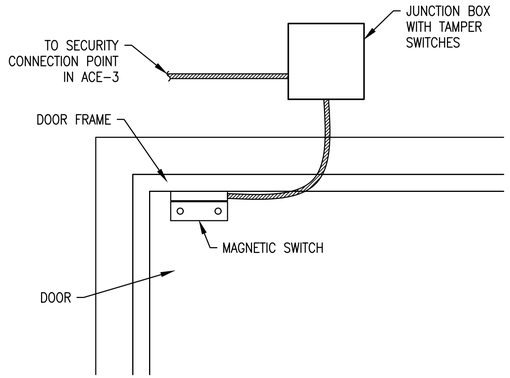

MAN DOOR SECURITY SWITCH DETAIL (C1)

SCALE: 3" = 1'-0"

NOTE: FOLLOW MANUFACTURERS INSTRUCTIONS FOR MOUNTING REQUIREMENTS.

NOTES

1. SEE SHEET E-001 FOR LEGEND, ABBREVIATIONS AND GENERAL NOTES.

EQUIPMENT LABEL & CHARACTERISTICS (VOLTAGE, PHASE, FREQUENCY)

FED FROM PANEL XX, CIRCUIT XX

ELECTRICAL LABELING DETAIL (A1)

SCALE: NTS

NOTES:
1. LABEL SHALL BE ENGRAVED MELAMINE PLASTIC PLATES.

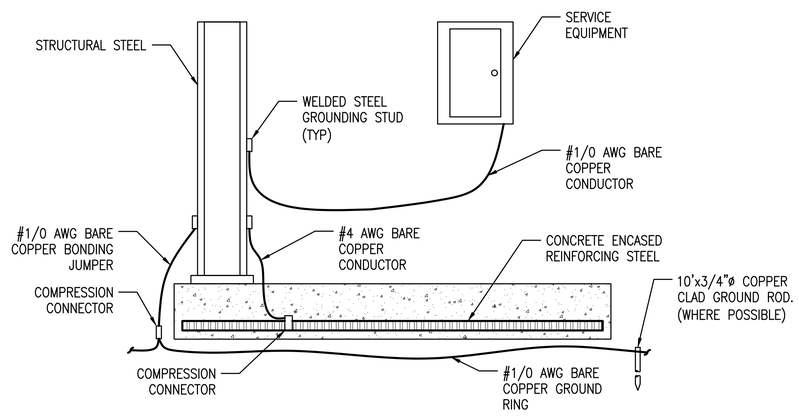

GROUNDING DIAGRAM (A2)

SCALE: NTS

NOTES:
1. WHERE GROUND RODS CANNOT BE DRIVEN TO PROPER DEPTHS ENSURE STRUCTURAL FOUNDATION REINFORCING IS BONDED TO PROVIDE ADEQUATE GROUNDING.
2. WHERE GROUND RODS ARE DRIVEN, PROVIDE A MINIMUM OF 3 RODS SPACED A MINIMUM OF 10FT APART.

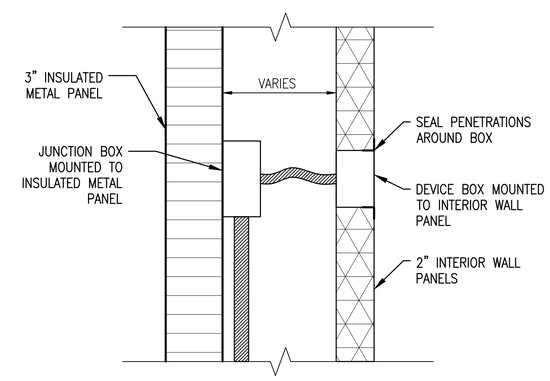

DEVICE BOX DETAIL (A4)

SCALE: 3" = 1'-0"

NOTES:
1. THIS DETAIL APPLIES TO ALL DEVICES MOUNTED ON EXTERIOR WALLS. INTERIOR PARTITIONS SHALL FOLLOW WALL PANEL MANUFACTURER'S INSTALLATION INSTRUCTIONS.

0 3" 6" 9"
Scale: 3" = 1'-0"

SYM	DESCRIPTION	DATE	APPR
0	ISSUED FOR CONSTRUCTION	10/28/2016	CBC

NAVFAC

STATE OF MAINE
JASON M. BEAULIEU
No. 13441
LICENSED PROFESSIONAL ENGINEER
10/28/16
SEAL

Colby Company engineering
A/E INFO

APPROVED David W. Krumfield
FOR COMMANDER NAVFAC

ACTIVITY: TIM FISHER, C. 2370.6 BRANCH HEAD
SATISFACTORY TO DATE 10/28/2016
DES JMB DRW JMB CHK MRL
PMDM PETER STOCKLESS
BRANCH MANAGER IAN BODWELL
FEA/PM&E AMIN BAHROUR
FIRE PROTECTION PATRICK BAKAJ

DEPARTMENT OF THE NAVY
NAVAL FACILITIES ENGINEERING COMMAND ~ MID-ATLANTIC
PUBLIC WORKS DEPARTMENT - MAINE
NAVAL FACILITIES ENGINEERING COMMAND
NAVAL SHIPYARD - PORTSMOUTH, NH
PORTSMOUTH NAVAL SHIPYARD
KITTERY, ME
DRY DOCK #1 DEFUELING COMPLEX
ACE-3
ELECTRICAL DETAILS

EPROJECT NO.: 1363311
CONSTR. CONTR. NO. N40085-17-C-5002
NAVFAC DRAWING NO. 12735257
SHEET 40 OF 43
E-504 DD1-16-1338

DRAWFORM REVISION: 10 OCTOBER 2014

10/28/2016 7:29:10 AM X:\297 PORTSMOUTH NAVAL SHIPYARD\297.005.001 - DD#1 DEFUELING COMPLEX DESIGN\DRAWINGS\ACE3\SHEETS\E-504.DWG

PANELBOARD NO:	ACE-3 PANEL 1	SC RATING:	65 KAIC
PANELBOARD TYPE:	SQUARE D NQOD	MOUNTING:	SURFACE
PANEL LOCATION:	GROUND LEVEL	VOLTAGE:	480V, 3-PHASE, 3-WIRE
SUPPLIED FROM:	M140-3 PANEL 0		

100 AMP MAIN BREAKER
100 AMP BUS (COPPER)

CKT NO.	TRIP AMPS	NO. POLES	WIRE / CONDUIT	GND. WIRE	LOAD SERVED	LOAD VA	ϕ	LOAD VA	LOAD SERVED	WIRE / CONDUIT	GND. WIRE	NO. POLES	TRIP AMPS	CKT NO.
1	50	3	3#8 / 3/4"	#10	PANEL ACE-3 PANEL 2 (THRU ACE-3 TX)	3740	A	8147	ROOF TOP UNIT (RTU-1)	3#10 / 3/4"	#10	3	30	2
3						5270	B	8147						4
5						3146	C	8147						6
7							A							8
9							B							10
11							C							12
13							A							14
15							B							16
17							C							18

TOTAL PHASE A LOAD = 11.9 KVA
TOTAL PHASE B LOAD = 13.4 KVA
TOTAL PHASE C LOAD = 11.3 KVA
TOTAL CONNECTED LOAD = 36.6 KVA

NOTES:

ACE-3 PANEL 1 SCHEDULE (D1)

SCALE: NTS

PANELBOARD NO:	ACE-3 PANEL 2	SC RATING:	22 KAIC
PANELBOARD TYPE:	SQUARE D NQOD	MOUNTING:	SURFACE
PANEL LOCATION:	GROUND LEVEL	VOLTAGE:	208Y/120V, 3-PHASE, 4-WIRE
SUPPLIED FROM:	ACE-3 PANEL 1		

100 AMP MAIN BREAKER
100 AMP BUS (COPPER)

CKT NO.	TRIP AMPS	NO. POLES	WIRE / CONDUIT	GND. WIRE	LOAD SERVED	LOAD VA	ϕ	LOAD VA	LOAD SERVED	WIRE / CONDUIT	GND. WIRE	NO. POLES	TRIP AMPS	CKT NO.
1	20	1	2#12 / 3/4"	#12	GENERAL RECEPTACLES	1080	A	200	FACP (PROVIDE LOCKABLE BREAKER)	2#12 / 3/4"	#12	1	20	2
3	20	1	2#12 / 3/4"	#12	RADCON STATION RECEPTACLES	900	B	192	RAE PASSAGEWAY LIGHTING	2#12 / 3/4"	#12	1	20	4
5	20	1	2#12 / 3/4"	#12	RADCON STATION RECEPTACLES	1080	C	96	M140 PASSAGEWAY LIGHTING	2#12 / 3/4"	#12	1	20	6
7	20	1	2#12 / 3/4"	#12	TV MONITOR RECEPTACLE	180	A	180	ROOFTOP RECEPTACLE	2#12 / 3/4"	#12	1	20	8
9	20	1	2#12 / 3/4"	#12	PORTAL COUNTER RECEPTACLE	180	B	1000	RAE PASSAGEWAY HEATER	2#12 / 3/4"	#12	2	15	10
11	20	1	2#12 / 3/4"	#12	PORTAL MONITOR	180	C	1000						12
13	20	1	2#12 / 3/4"	#12	PORTAL MONITOR	180	A	1000	M140 PASSAGEWAY HEATER	2#12 / 3/4"	#12	2	15	14
15	20	1	2#12 / 3/4"	#12	INTERIOR LIGHTING	1458	B	1000						16
17	20	1	2#12 / 3/4"	#12	EXTERIOR LIGHTING	210	C	200	STATION CONTROL PANEL	2#12 / 3/4"	#12	1	20	18
19	20	1	2#12 / 3/4"	#12	SECURITY SYSTEM QUAD RECEPTACLE	360	A	180	SECURITY SYSTEM CABINET COOLING	2#10 / 3/4"	#10	2	30	20
21							B	180						22
23							C	180	SECURITY SYSTEM CABINET	2#10 / 3/4"	#10	2	30	24
25							A	180						26
27							B	360	SECRUITY SYSTEM QUAD RECEPTACLE	2#12 / 3/4"	#12	1	20	28
29							C	200	INTERCOM SYSTEM EQUIPMENT	2#12 / 3/4"	#12	1	20	30
31							A	200	CASUALTY PA SYSTEM EQUIPMENT	2#12 / 3/4"	#12	1	20	32
33							B							34
35							C							36
37							A							38
39							B							40
41							C							42

TOTAL PHASE A LOAD = 3.7 KVA
TOTAL PHASE B LOAD = 5.3 KVA
TOTAL PHASE C LOAD = 3.1 KVA
TOTAL CONNECTED LOAD = 12.2 KVA

NOTES:

ACE-3 PANEL 2 SCHEDULE (C3)

SCALE: NTS

TYPE	DESCRIPTION	VOLT	MANUFACTURER (OR EQUAL)	LAMPS	MOUNTING	NOTES
A	4' LONG FLUORESCENT LOW PROFILE WRAPAROUND PROVIDED WITH ACRYLIC LENS AND ELECTRONIC BALLAST	120	COLUMBIA AWW4-354-EPU	(3) - 54W T5HO	SURFACE	
D	2X4 FLUORESCENT TROFFER WITH ACRYLIC LENS AND ELECTRONIC BALLAST	120	COLUMBIA 4PS24-354G-FSA12-EU	(3) - 54W T5HO	GRID	
AA	EXTERIOR WALL MOUNTED LED FIXTURE WITH BLACK FINISH AND TYPE IV DISTRIBUTION	120	HUBBELL LMC-30LU-4K-4-2	70W LED	WALL	CONTROL LIGHT FIXTURES THROUGH TIMER SWITCH. MOUNT FIXTURES 10FT AFF UNLESS OTHERWISE NOTED. SEE ARCHITECTURAL SHEETS FOR MOUNTING DETAILS.
	LED EXIT SIGN PROVIDED WITH MAINTENANCE FREE NICKEL-CADMIUM BATTERY AND SELF-DIAGNOSITC ELECTRONICS.	120	DUAL LITE SESRWEI	LED	WALL	
	DUAL HEAD EMERGENCY FIXTURE PROVIDED WITH THERMOPLASTIC HOUSING, LITHIUM IRON PHOSPHATE BATTERY, AND SELF-DIAGNOSTIC ELECTRONICS	120	DUAL LITE EVHC12IBC	3W LED	WALL	

LIGHT FIXTURE SCHEDULE (A1)

SCALE: NTS

SYM	DESCRIPTION	DATE	APPR
0	ISSUED FOR CONSTRUCTION	10/28/2016	CBC

NAVFAC

STATE OF MAINE JASON M. BEAULIEU No. 13441 LICENSED PROFESSIONAL ENGINEER 10/28/16 SEAL

Colby Company engineering

A/E INFO

APPROVED David W. Krumfield
FOR COMMANDER NAVFAC

ACTIVITY
TIM FISHER
C. 2370.6 BRANCH HEAD

SATISFACTORY TO DATE 10/28/2016

DES JMB | DRW JMB | CHK MRL

PM/DM PETER STOCKLESS
BRANCH MANAGER IAN BODWELL
FEAD/PM&E AMIN BAHROUR
FIRE PROTECTION PATRICK BAKAJ

DEPARTMENT OF THE NAVY
NAVAL FACILITIES ENGINEERING COMMAND
PUBLIC WORKS DEPARTMENT - MAINE
NAVAL FACILITIES ENGINEERING COMMAND ~ MID-ATLANTIC
NAVAL SHIPYARD - PORTSMOUTH, NH
PORTSMOUTH NAVAL SHIPYARD
KITTERY, ME
DRY DOCK #1 DEFUELING COMPLEX
ACE-3
ELECTRICAL SCHEDULES

EPROJECT NO.: 1363311
CONSTR. CONTR. NO. N40085-17-C-5002
NAVFAC DRAWING NO. 12735258
SHEET 41 OF 43

E-601 | DD1-16-1339

DRAWFORM REVISION: 10 OCTOBER 2014

10/28/2016 7:29:14 AM X:\297 PORTSMOUTH NAVAL SHIPYARD\297.005.001 - DD#1 DEFUELING COMPLEX DESIGN\DRAWINGS\ACE3\SHEETS\E-601.DWG

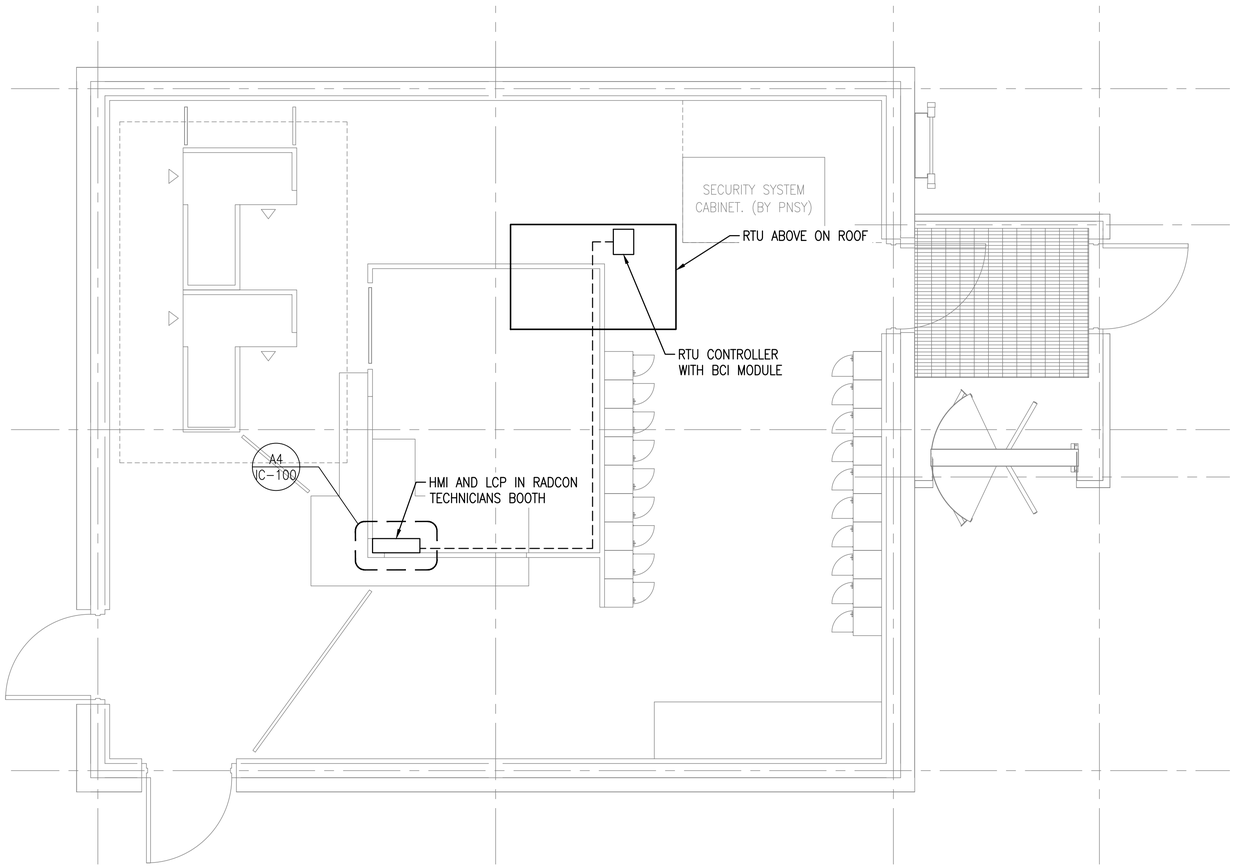

GROUND LEVEL CONTROLS PLAN

SCALE: 3/8" = 1'-0"

PLAN NORTH

NOTES

1. SEE SHEET E-001 FOR LEGEND, ABBREVIATIONS AND GENERAL NOTES.
2. ALL NETWORKING AND CONTROL WIRING SHALL BE INSTALLED IN CONDUIT. ALL INTERIOR CONDUIT SHALL BE EMT. ALL EXTERIOR CONDUIT SHALL BE LFMC.

KEYED NOTES

1. ROUTE TO M-140-3 COMPLEX THROUGH PASSAGEWAYS. DRE-7 AND M-140-4 ARE CONNECTED THROUGH M-140-3 NETWORK SWITCH. SEE M-140 COMPLEX DESIGN DRAWINGS FOR MORE DETAILS.
2. PROVIDE CABLING TO DRY DOCK WALL USING ABOVE GROUND PATHWAY SHOWN ON SITE & FOUNDATIONS ELECTRICAL SITE PLAN. TERMINATE CABLE WITH WEATHERPROOF RJ45 PLUG.

LEGEND

BCI	BACNET COMMUNICATION INTERFACE
JB	JUNCTION BOX
LCP	LOCAL CONTROL PANEL
RCP	ROOF CONTROL PANEL
TSP	TWISTED, SHIELDED PAIR
MS/TP	MASTER SLAVE TOKEN PASSING
HMI	HUMAN MACHINE INTERFACE

- - - - - - TWISTED PAIR CABLE WITH SHIELD FOR BACNET MS/TP

—o— CAT5E CABLE FOR ETHERNET/IP

— - - - — TSP, MULTI-CONDUCTOR SIGNAL CABLE

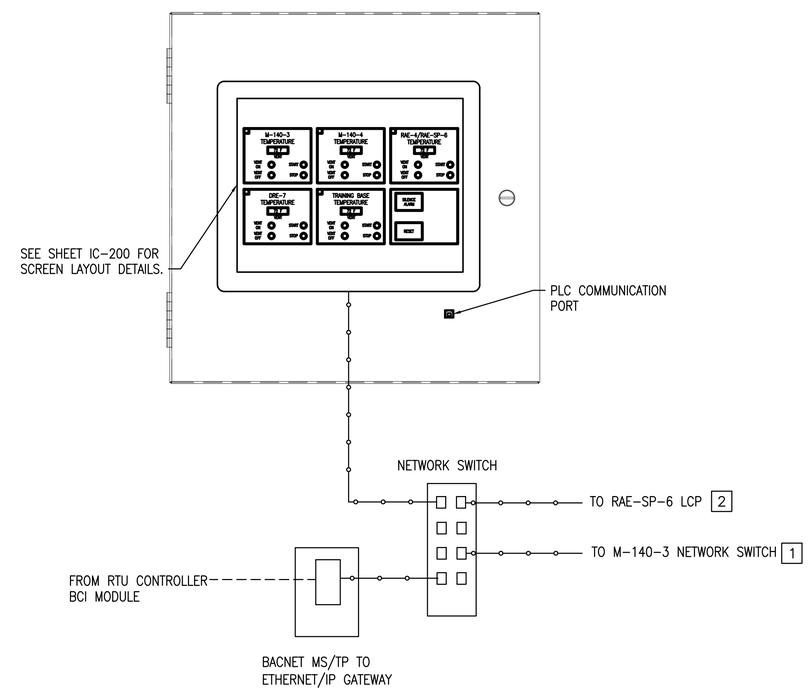

LCP COMMUNICATION DIAGRAM

SCALE: NTS

IC-100 A4

0 2' 4' 6'
Scale: 3/8" = 1'-0"

SYM	DESCRIPTION	DATE	APPR
0	ISSUED FOR CONSTRUCTION	10/28/2016	CBC

NAVFAC

STATE OF MAINE
JASON M. BEAULIEU
No. 13441
LICENSED PROFESSIONAL ENGINEER
10/28/16
SEAL

Colby Company engineering
A/E INFO

APPROVED BY: David W. Krumfield
FOR COMMANDER NAVFAC

ACTIVITY: TIM FISHER, C. 2370.6 BRANCH HEAD

SATISFACTORY TO DATE 10/28/2016

DES	JMB	DRW	JMB	CHK	MRL

PM/DM	PETER STOCKLESS
BRANCH MANAGER	IAN BODWELL
FEA/DPM&E	AMIN BAHROUR
FIRE PROTECTION	PATRICK BAKAJ

DEPARTMENT OF THE NAVY
NAVAL FACILITIES ENGINEERING COMMAND
PUBLIC WORKS DEPARTMENT - MAINE
NAVAL FACILITIES ENGINEERING COMMAND – MID-ATLANTIC
NAVAL SHIPYARD - PORTSMOUTH, NH
PORTSMOUTH NAVAL SHIPYARD
KITTERY, ME
DRY DOCK #1 DEFUELING COMPLEX
ACE-3
GROUND LEVEL CONTROLS PLAN

EPROJECT NO.: 1363311

CONSTR. CONTR. NO. N40085-17-C-5002

NAVFAC DRAWING NO. 12735259

SHEET 42 OF 43

IC-100 | DD1-16-1340

DRAWFORM REVISION: 10 OCTOBER 2014

10/28/2016 7:29:19 AM X:\297 PORTSMOUTH NAVAL SHIPYARD\297.005.001 - DD#1 DEFUELING COMPLEX DESIGN\DRAWINGS\ACE3\SHEETS\IC-100.DWG

NOTES

1. SEE SHEET E-001 FOR LEGEND, ABBREVIATIONS AND GENERAL NOTES.

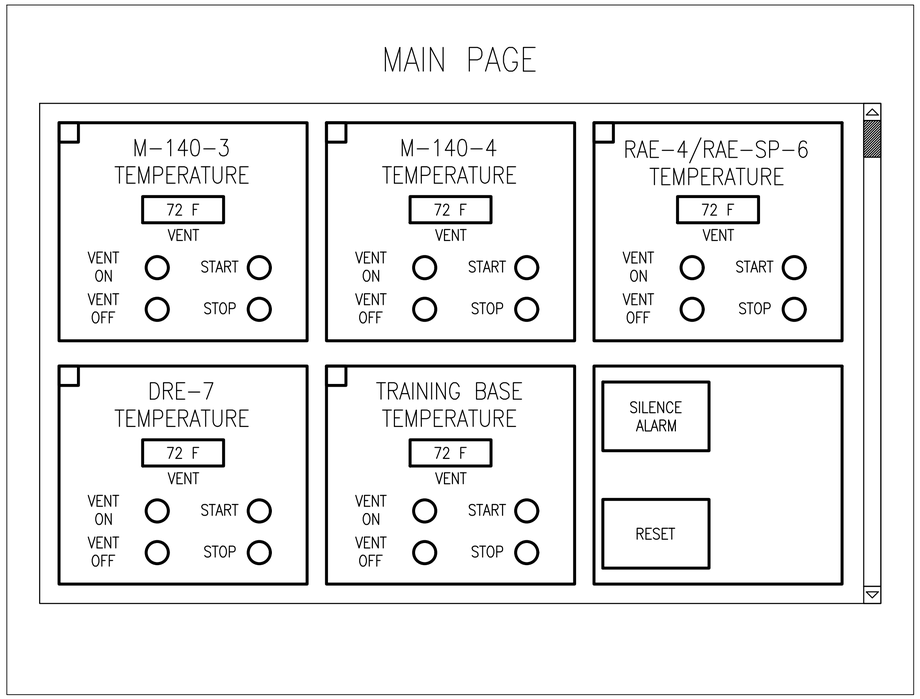

STATION CONTROL PANEL MAIN SCREEN (B1)

SCALE: NTS

NOTES:
THIS ACE DISPLAY HAS EACH OF THE KEY ENCLOSURES AND THE TEMPERATURES INSIDE THE ENCLOSURE DISPLAYED ON THE TOUCH SCREEN. THERE ARE BUTTONS ON THE DISPLAY FOR EACH ENCLOSURE WHICH START AND STOP THE VENT SYSTEM WHEN DEPRESSED FOR 5 SECONDS. WHEN THE VENT SYSTEM IN AN ENCLOSURE GOES INTO ALARM OR WHEN THE VENT ON STATE GOES FROM ON TO OFF WILL ALARM (SET OFF AN AUDIBLE ALARM) AND CAUSE THE ENCLOSURE BLOCK TO FLASH. THE SILENCE ALARM KEY IS USED TO TURN OFF THE AUDIBLE ALARM BUT THE ENCLOSURE BLOCK WILL CONTINUE TO FLASH UNTIL IT IS RESET BY PRESSING THE RESET BUTTON. WHEN THE ENCLOSURE UPPER LEFT SQUARE IS PRESSED AND HELD FOR 5 SECONDS THE "CONFIGURATION" SCREEN WILL OPEN FOR THAT SELECTED ENCLOSURE AND THE VENTILATION MAY BE ADJUSTED FROM THE ACE.

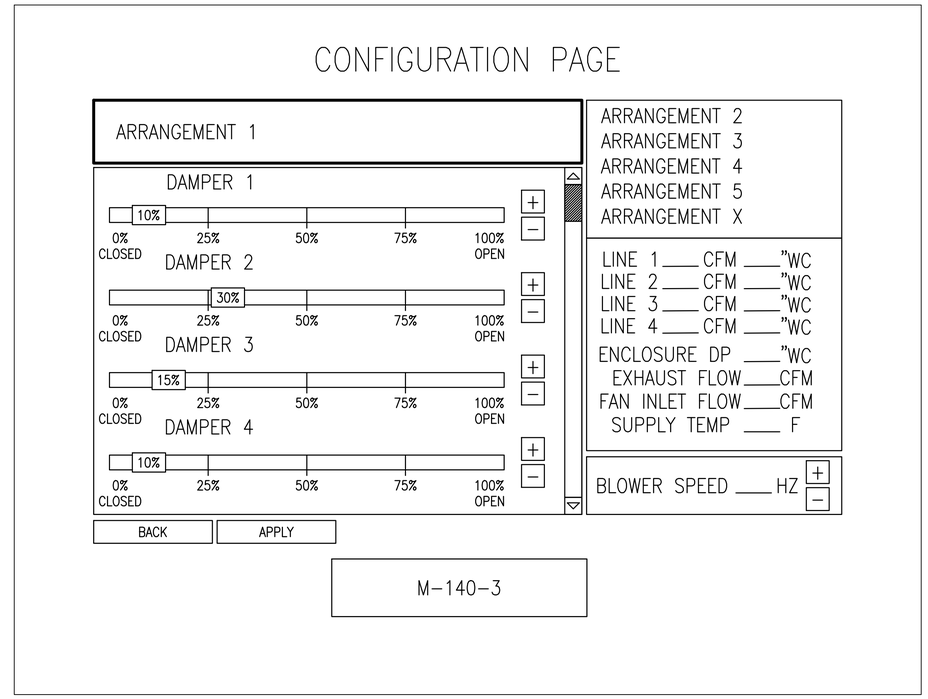

STATION CONTROL PANEL CONFIGURATION SCREEN (B3)

SCALE: NTS

NOTES:
THE CONFIGURATION PAGE IS WHERE THE ARRANGEMENTS CAN BE SETUP AND THE INDICATIONS OF AVERAGED (OVER 5 SECONDS) CFMs AND DPs WILL BE SHOWN.

EACH DAMPER IN THE ENCLOSURE VENTILATION SYSTEM WILL HAVE A SLIDER AND FINE ADJUST +/- BUTTONS TO ADJUST THE DAMPER. DAMPER SHALL BE NAMED TO CLEARLY IDENTIFY DAMPER LOCATION.

BLOWER SPEED SHALL INDICATE UNITS TO MATCH VFD CONTROLLER.

THE "BACK" BUTTON WILL RETURN TO THE MAIN SCREEN WITHOUT SAVING ANY CHANGES. THE "APPLY" BUTTON WILL BRING UP A CONFIRMATION SCREEN TO SAVE ALL CHANGES AND THEN RETURN TO THE MAIN SCREEN. DO NOT SHOW APPLY BUTTON WHEN IN READ ONLY MODE OF CONFIGURATION PAGE.

SYM	DESCRIPTION	DATE	APPR
0	ISSUED FOR CONSTRUCTION	10/28/2016	CBC

NAVFAC

STATE OF MAINE
JASON M. BEAULIEU
No. 13441
LICENSED PROFESSIONAL ENGINEER
10/28/16
SEAL

Colby Company engineering
A/E INFO

APPROVED
FOR COMMANDER NAVFAC
ACTIVITY
TIM FISHER
C. 2370.6 BRANCH HEAD
SATISFACTORY TO DATE 10/28/2016
DES JMB DRW JMB CHK MRL
PM/DM PETER STOCKLESS
BRANCH MANAGER IAN BODWELL
FEA/DPM&E AMIN BAHROUR
FIRE PROTECTION PATRICK BAKAJ

DEPARTMENT OF THE NAVY
NAVAL FACILITIES ENGINEERING COMMAND
PUBLIC WORKS DEPARTMENT - MAINE
NAVAL FACILITIES ENGINEERING COMMAND ~ MID-ATLANTIC
NAVAL SHIPYARD - PORTSMOUTH, NH
PORTSMOUTH NAVAL SHIPYARD
KITTERY, ME
DRY DOCK #1 DEFUELING COMPLEX
ACE-3
CONTROL PANEL SCREEN LAYOUTS

EPROJECT NO.: 1363311
CONSTR. CONTR. NO. N40085-17-C-5002
NAVFAC DRAWING NO. 12735260
SHEET 43 OF 43
IC-200 DD1-16-1341
DRAWFORM REVISION: 10 OCTOBER 2014

10/28/2016 7:29:25 AM X:\297 PORTSMOUTH NAVAL SHIPYARD\297.005.001 - DD#1 DEFUELING COMPLEX DESIGN\DRAWINGS\ACE3\SHEETS\IC-200.DWG