ARCHITECTURAL SYMBOLS

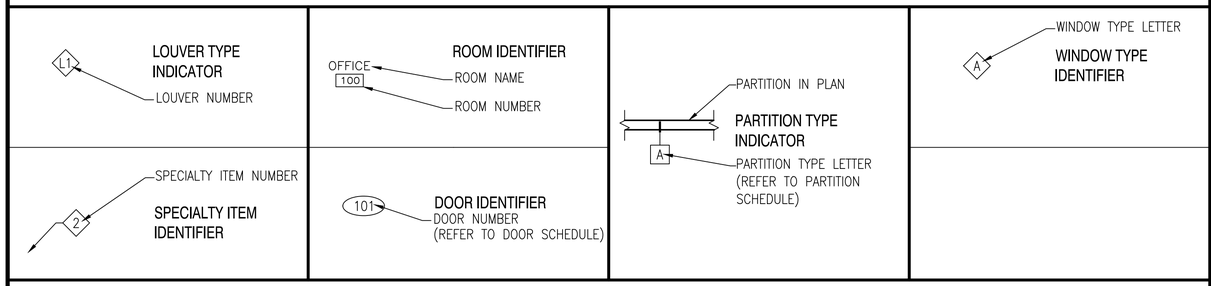

MATERIALS LEGEND

SECTION VIEW		WOOD – ROUGH		WOOD BLOCKING
		CONCRETE MASONRY UNIT		BRICK
		CAST-IN-PLACE CONCRETE		PLYWOOD-LARGE SCALE
		STEEL		GLASS-LARGE SCALE
		EARTH/COMPACT FILL		ACOUSTICAL TILE
		BATT/LOOSE FILL INSULATION		PLYWOOD-SMALL SCALE
		POROUS FILL/GRAVEL		CERAMIC TILE-LARGE SCALE
		RIGID INSULATION		SAND/MORTAR/PLASTER
		GYPSUM BOARD		FINISHED WOOD
		RESILIENT FLOORING/ PLASTIC LAMINATE		MARBLE
		ALUMINUM		GYPSUM BOARD
ELEVATION/PLAN VIEW		CONCRETE		
		SHEET METAL-LARGE SCALE		
		GLASS		

GENERAL ARCHITECTURAL NOTES

1. ALL ITEMS INDICATED TO BE REMOVED SHALL BE DISPOSED OF OFF SITE BY THE CONTRACTOR UNLESS OTHERWISE NOTED.
2. ALL MATERIALS SHALL BE NEW AND PROVIDED BY THE CONTRACTOR UNLESS SPECIFICALLY NOTED AS EXISTING OR AS PROVIDED BY THE GOVERNMENT.
3. ALL WOOD BLOCKING AND MISCELLANEOUS STEEL SHOWN IN DETAILS AND SECTIONS SHALL BE CONTINUOUS UNLESS SPECIFICALLY NOTED OTHERWISE.
4. THE CONTRACTOR SHALL VERIFY ALL FIELD CONDITIONS AND DIMENSIONS PRIOR TO PROCEEDING WITH THE WORK. DIMENSIONS FOR EXISTING WORK ARE INDICATED AS "±". ALL DISCREPANCIES SHALL BE BROUGHT TO THE IMMEDIATE ATTENTION OF THE CONTRACTING OFFICER IN WRITING.
5. DEMOLITION OF PLUMBING, MECHANICAL AND ELECTRICAL ITEMS INDICATED ON THE ARCHITECTURAL DRAWINGS IS NOT INTENDED TO INCLUDE ALL NECESSARY DEMOITION WORK FOR THESE ITEMS. REFER TO PLUMBING, MECHANICAL AND ELECTRICAL DEMOLITION DRAWINGS FOR ADDITIONAL INFORMATION.
6. DIMENSIONS INDICATED FOR NEW WORK ARE TO FACE OF STUD, FACE OF MASONRY OR FACE OF EXISTING SURFACES UNLESS OTHERWISE NOTED.
7. THE EXISTING BUILDING SP-250 WAS CONSTRUCTED IN TWO WINGS. THE EAST WING WAS CONSTRUCTED AS P-705 AND IS DOCUMENTED ON NAVFAC DRAWINGS NO. 4553587 THROUGH 4553712. THE WEST WING WAS CONSTRUCTED AS P-707 AND IS DOCUMENTED ON NAVFAC DRAWINGS NO. 12510566 THROUGH 12510701.
8. THE ABBREVIATION LIST SHOWN ON THIS SHEET WAS DEVELOPED FROM A MASTER LIST. NOT ALL ABBREVIATIONS ARE USED IN THIS SET OF DOCUMENTS.
9. REFER TO SHEET A-101 FOR GROSS BUILDING AREAS.

PARTITION TYPE DETAILS

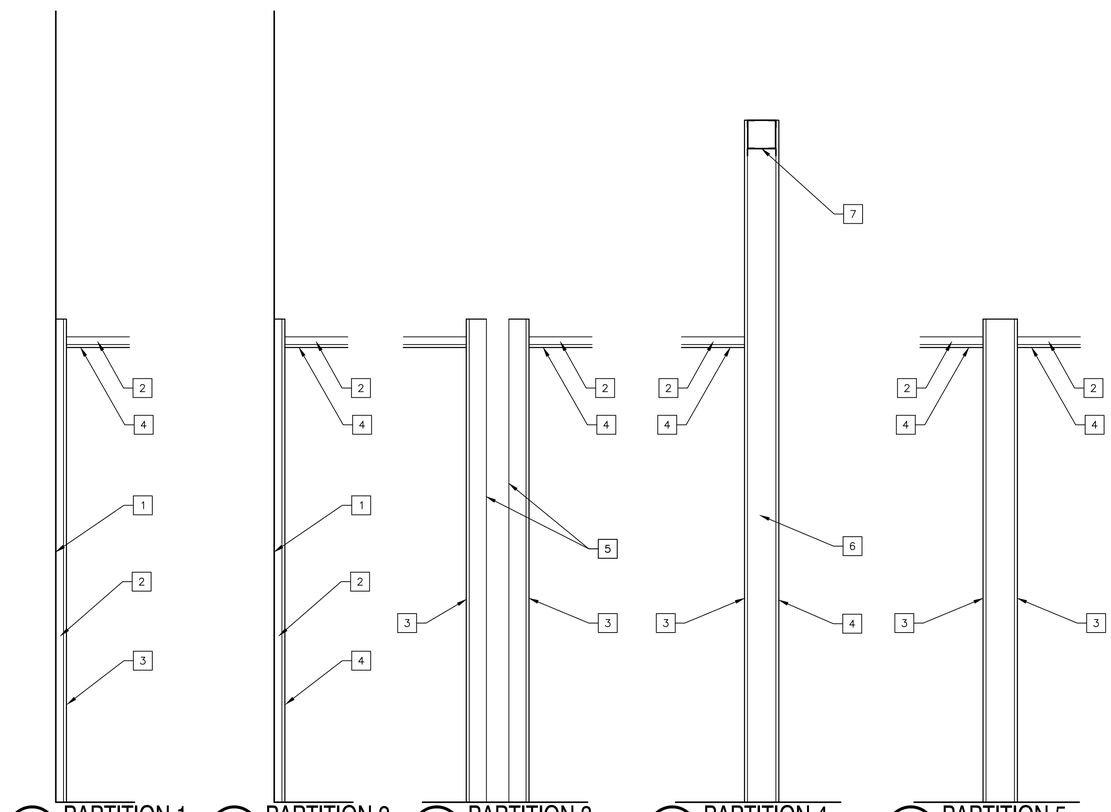

1 PARTITION 1 SCALE: 3/4" A-102

2 PARTITION 2 SCALE: 3/4" A-102

3 PARTITION 3 SCALE: 3/4" A-102

4 PARTITION 4 SCALE: 3/4" A-102

5 PARTITION 5 SCALE: 3/4" A-102

PARTITION TYPE KEYNOTES

1. EXTERIOR FACE OF EXISTING BUILDING SP-250.
2. 1-5/8" 25 GAUGE METAL STUD FURRING @ 1'-4" O.C.
3. 5/8" CEMENTITIOUS BACKER BOARD.
4. 5/8" GYPSUM BOARD.
5. 3-5/8" 25 GAUGE METAL STUDS @ 1'-4" O.C.
6. 6" 20 GAUGE METAL STUDS @ 2'-0" O.C.
7. CONTINUOUS BOX BEAM AROUND PERIMETER OF TOILET ROOM/JANITOR CLOSET CORE FORMED OF 6" 20 GAUGE CHANNELS.

SYM	DESCRIPTION	DATE	APPR

SEAL

A/E INFO

APPROVED

FOR COMMANDER NAVFAC

ACTIVITY

SATISFACTORY TO DATE

DES LAS DRW LAS CHK TLD

PM/DM M. PERRY/L. SANDERS

BRANCH MANAGER TLO

CHIEF ENG/ARCH RW

FIRE PROTECTION

DEPARTMENT OF THE NAVY
NAVAL FACILITIES ENGINEERING COMMAND
HAMPTON ROADS IPT

NAVAL FACILITIES ENGINEERING COMMAND - MIDATLANTIC
NAVAL STATION – NORFOLK, VIRGINIA

NAVAL STATION NORFOLK
NORFOLK, VIRGINIA

FY 2016 P-518
MH-60 AVET TRAINING FACILITY

SYMBOLS, LEGEND, PARTITION TYPES & NOTES

SCALE: AS NOTED

EPROJECT NO.: 1291639

CONSTR. CONTR. NO.

NAVFAC DRAWING NO.
12701650

SHEET 54 OF 109

A-001

DRAWFORM REVISION: 10 MARCH 2009

FILE NAME: P:\VA\NavalStationNorfolk\MILCON\2016_1291639_P-518_DRB_MH-60 AVET Training Facility\BI_Design\Drawings\Sheet Files\08_Architecture\A-001.dwg LAYOUT NAME: A-001 PLOTTED: Monday, September 28, 2015 - 8:47am USER: louis.sanders

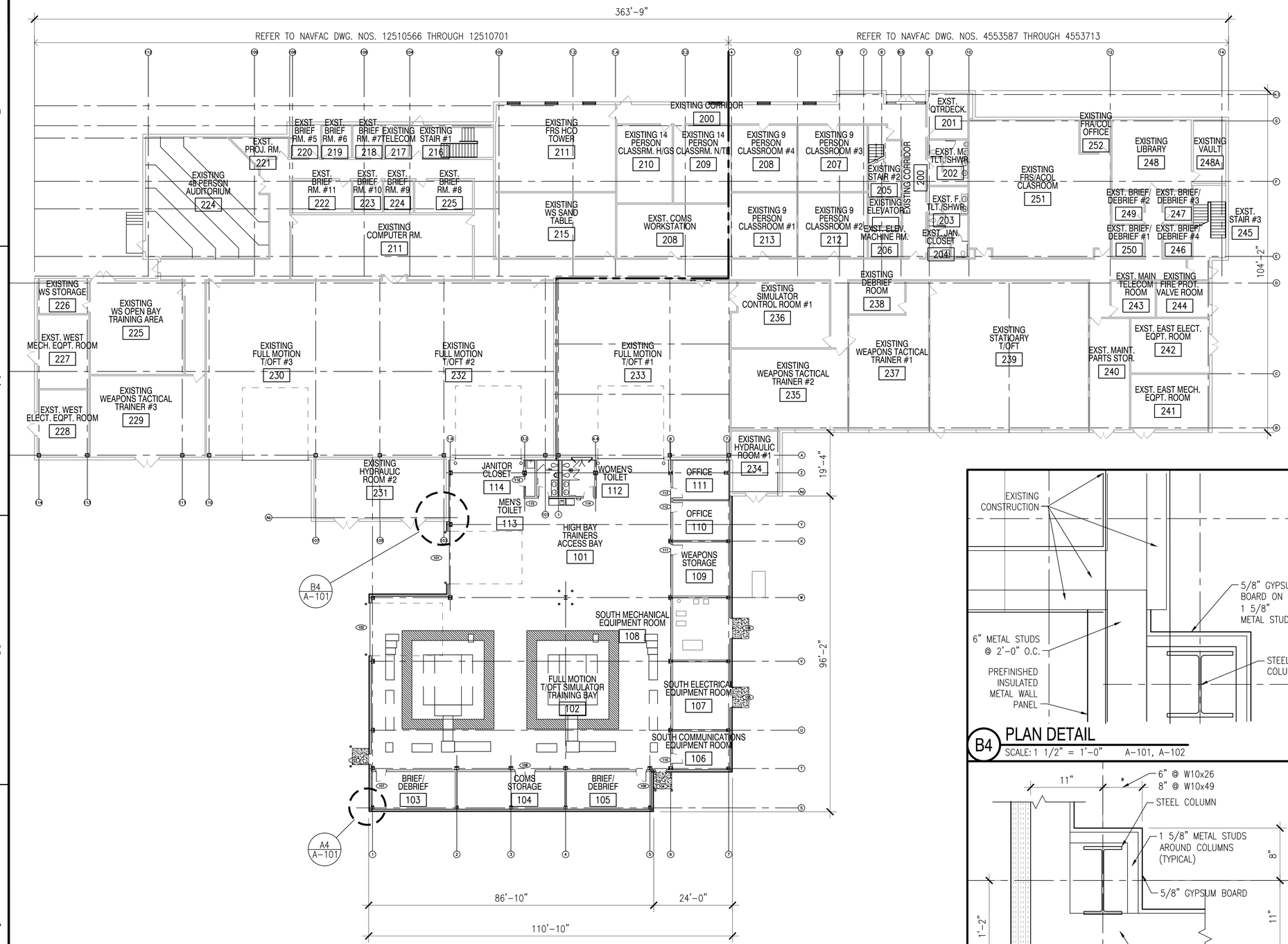

OVERALL FLOOR PLAN

SCALE: 1/16"=1'-0"

B4 PLAN DETAIL

SCALE: 1 1/2" = 1'-0" A-101, A-102

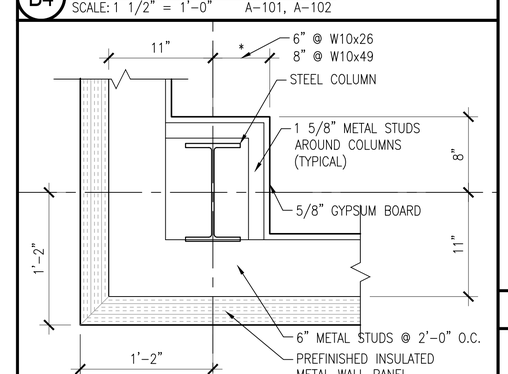

A4 TYPICAL COLUMN DETAIL

SCALE: 1 1/2" = 1'-0" A-101, A-102

GENERAL SHEET NOTES

1. THE EXISTING BUILDING SP-250 WAS CONSTRUCTED IN TWO WINGS. THE EAST WING WAS CONSTRUCTED AS P-705 AND IS DOCUMENTED ON NAVFAC DRAWINGS NO. 4553587 THROUGH 4553713. THE WEST WING WAS CONSTRUCTED AS P-707 AND IS DOCUMENTED ON NAVFAC DRAWINGS NO. 12510566 THROUGH 12510701.

SYMBOL LEGEND

EXISTING WALL OR PARTITION
EXISTING DOOR

NEW WALL OR PARTITION
NEW DOOR & NUMBER

HIGH BAY TRAINERS ACCESS BAY 101 — ROOM NAME & NUMBER

GROSS BUILDING AREA

1. EXISTING BUILDING SP250 FIRST FLOOR = 36,375 GSF
2. EXISTING BUILDING SP250 SECOND FLOOR = 16,705 GSF
3. P-518 CONSTRUCT ADDITION = 10,602 GSF
4. TOTAL FOOTPRINT = 63,682 GSF

PLAN NORTH

GRAPHIC SCALES

1/16"=1'-0" 0' 8' 16' 32'
1-1/2"=1'-0" 0 6" 1' 1'-6"

SYM	DESCRIPTION	DATE	APPR

NAVFAC

SEAL

A/E INFO

APPROVED

FOR COMMANDER NAVFAC

ACTIVITY

SATISFACTORY TO DATE

DES LAS DRW LAS CHK TLD
PM/DM M. PERRY/L. SANDERS
BRANCH MANAGER TLD
CHIEF ENG/ARCH RW
FIRE PROTECTION

DEPARTMENT OF THE NAVY
NAVAL FACILITIES ENGINEERING COMMAND
NAVAL FACILITIES ENGINEERING COMMAND - MIDATLANTIC
NAVAL STATION - NORFOLK, VIRGINIA
NAVAL STATION NORFOLK
HAMPTON ROADS PT.
NORFOLK, VIRGINIA

FY 2016 P-518
MH-60 AVET TRAINING FACILITY

OVERALL FLOOR PLAN

SCALE: 1/8"=1'-0"
EPROJECT NO.: 1291639
CONSTR. CONTR. NO.
NAVFAC DRAWING NO. 12701651
SHEET 55 OF 109

A-101

DRAWFORM REVISION: 10 MARCH 2009

FILE NAME: P:\VA\NavalStationNorfolk\MILCON\2016_1291639_P-518_DBB_MH-60 AVET Training Facility\B_Design\Drawings\Sheet Files\08_Architecture\A-101.dwg LAYOUT NAME: A-101 PLOTTED: Monday, September 28, 2015 - 8:23am USER: tuck.sanders

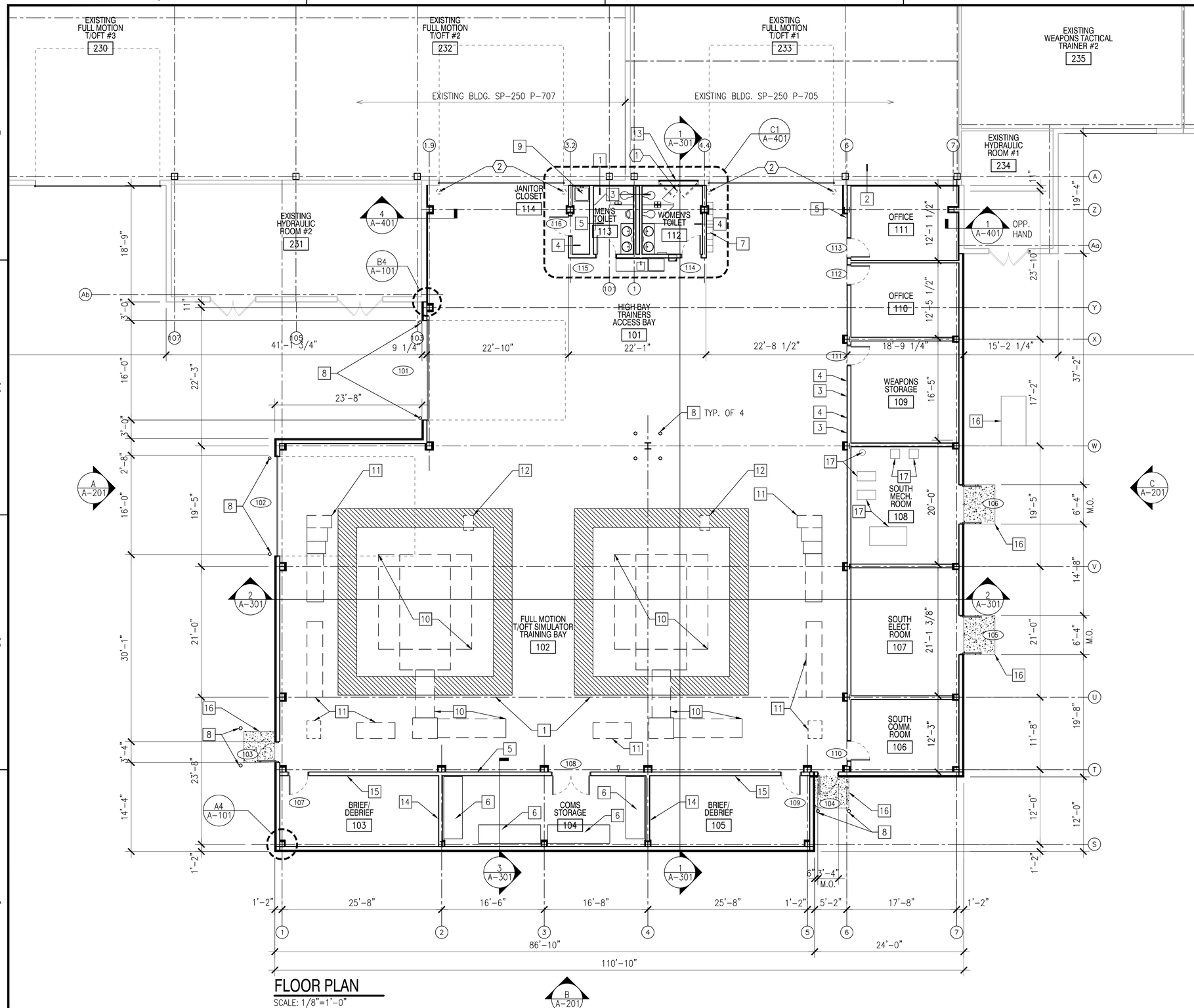

FLOOR PLAN

SCALE: 1/8"=1'-0"

GENERAL SHEET NOTES

1. THE EXISTING BUILDING SP-250 WAS CONSTRUCTED IN TWO WINGS. THE EAST WING WAS CONSTRUCTED AS P-705 AND IS DOCUMENTED ON NAVFAC DRAWINGS NO. 4553587 THROUGH 4553713. THE WEST WING WAS CONSTRUCTED AS P-707 AND IS DOCUMENTED ON NAVFAC DRAWINGS NO. 12510566 THROUGH 12510701.
2. REFER TO SHEET A-101 FOR EXISTING BUILDING AND P-518 ADDITION GROSS AREA.

SYMBOL LEGEND

- EXISTING WALL OR PARTITION
- EXISTING DOOR
- NEW WALL OR PARTITION
- NEW DOOR & NUMBER
- HIGH BAY TRAINERS ACCESS BAY 101 — ROOM NAME & NUMBER

DEMOLITION KEYNOTES

1. REMOVE EXISTING PAIR OF DOORS, H.M. FRAME, AND FINISH HARDWARE.
2. REMOVE EXISTING STEEL BOLLARDS AND PATCH CONCRETE SLAB FLUSH WITH ADJACENT SURFACES.

NEW WORK KEYNOTES

1. PROVIDE CONTINUOUS 3'-0" WIDE WARNING BAND OF SAFETY STRIPING TO INDICATE RANGE-OF-MOTION FOOTPRINT OF FULL MOTION F/OFT SIMULATOR (N.I.C.)
2. SECURE NEW PARTITION FRAMING TO FACE OF EXISTING PREFABRICATED INSULATED METAL PANEL SYSTEM.
3. 4'H X 3'W TACKBOARD
4. 4'H X 3'W MARKERBOARD
5. 4'H X 6'W LOCKABLE TACKBOARD CABINET
6. METAL SHELVING, 36"D X 120"W X 72"H
7. METAL DOUBLE TIER LOCKERS, 12"W X 12"D X 72"D
8. 6" DIA. STEEL BOLLARDS 4'-0" HIGH.
9. MOP SINK WITH MOP RACK 6'-0" AFF.
10. FOOTPRINT OF FULL MOTION F/OFT TRAINING SIMULATOR EQUIPMENT (N.I.C.)
11. FOOTPRINT OF TRAINING SIMULATOR SUPPORT EQUIPMENT (N.I.C.)
12. FOOTPRINT OF PORTABLE A/C UNITS (N.I.C.)
13. BLOCK UP EXISTING DOOR OPENING WITH 5/8" GYPSUM BOARD ON 1 5/8" METAL STUDS @ 1'-4" O.C.
14. SMART BOARD TO BE PROVIDED IN A/V PACKAGE. PROVIDE BLOCKING AS REQUIRED.
15. 4'H X 6'W MARKERBOARD.
16. CONCRETE STOOP SET 1/2" BELOW FINISH FLOOR ELEVATION AT DOORWAY & SLOPE 1/2" TO EDGE.
17. SEE SHEET M-401 FOR EQUIPMENT CALLOUTS.

PLAN NORTH

GRAPHIC SCALE

1/8"=1'-0" 0' 4' 8' 16'

SYM	DESCRIPTION	DATE	APPR

NAVFAC

APPROVED

FOR COMMANDER NAVFAC

ACTIVITY

SATISFACTORY TO DATE

DES LAS DRW LAS CHK TLD

PM/DM M. PERRY/L. SANDERS

BRANCH MANAGER TLD

CHIEF ENG/ARCH RW

FIRE PROTECTION

DEPARTMENT OF THE NAVY
NAVAL FACILITIES ENGINEERING COMMAND
HAMPTON ROADS IPT
NAVAL FACILITIES ENGINEERING COMMAND - MIDATLANTIC
NAVAL STATION - NORFOLK, VIRGINIA
NAVAL STATION NORFOLK
NORFOLK, VIRGINIA

FY 2016 P-518
MH-60 AVET TRAINING FACILITY

BUILDING ADDITION FLOOR PLAN

SCALE: 1/8"=1'-0"

EPROJECT NO.: 1291639

CONSTR. CONTR. NO.

NAVFAC DRAWING NO. 12701652

SHEET 56 OF 109

A-102

DRAWFORM REVISION: 10 MARCH 2009

FILE NAME: P:\VA\NavalStationNorfolk\MLCON\2016_1291639_P-518_DBB_MH-60 AVET Training Facility\B_Design\Drawings\Sheet Files\08_Architecture\A-102.dwg LAYOUT NAME: A-102 PLOTTED: Monday, September 28, 2015 - 8:28am USER: luis.sanders

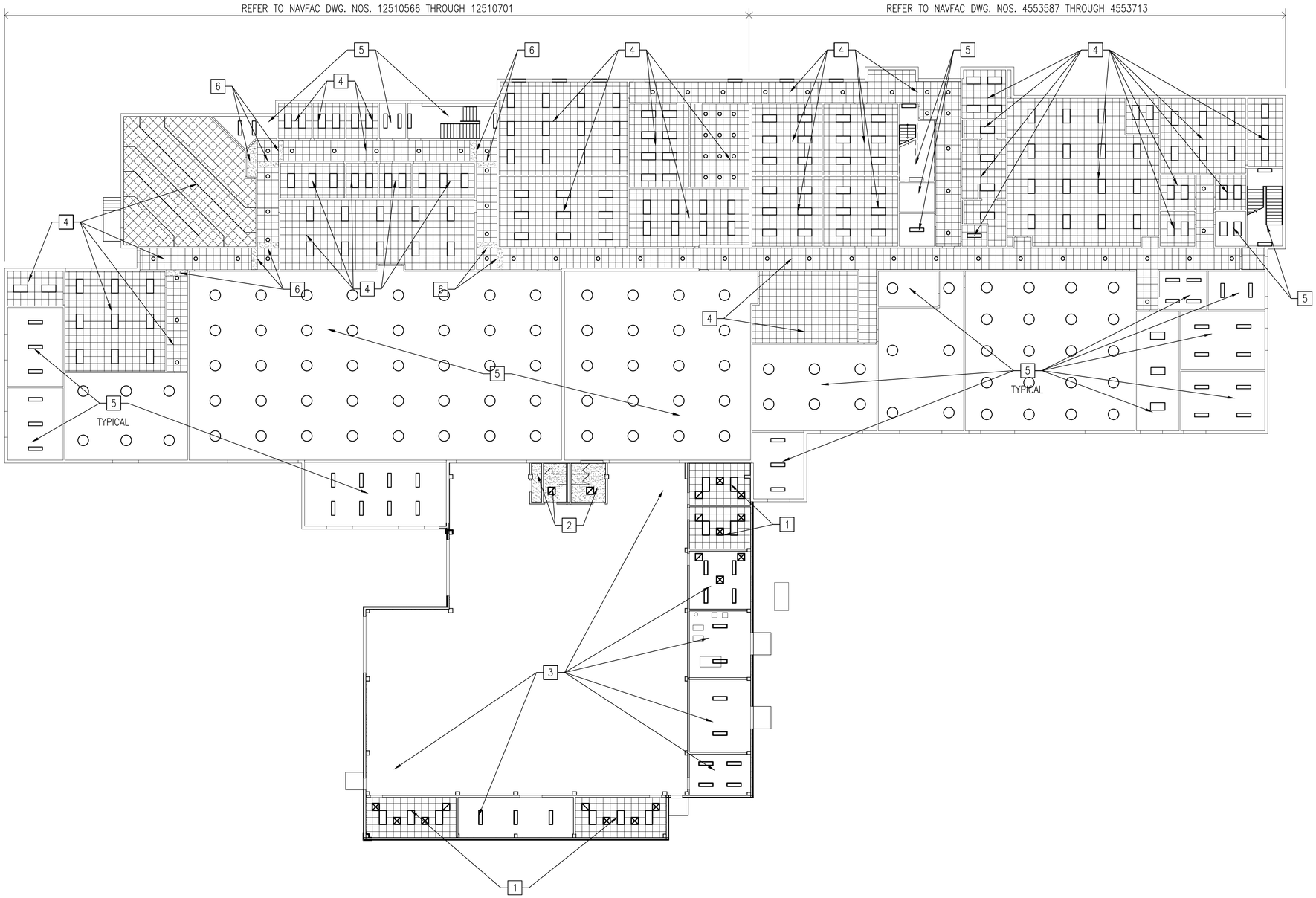

OVERALL REFLECTED CEILING PLAN

SCALE: 1/16"=1'-0"

GENERAL SHEET NOTES

1. THE EXISTING BUILDING SP-250 WAS CONSTRUCTED IN TWO WINGS. THE EAST WING WAS CONSTRUCTED AS P-705 AND IS DOCUMENTED ON NAVFAC DRAWINGS NO. 4553587 THROUGH 4553713. THE WEST WING WAS CONSTRUCTED AS P-707 AND IS DOCUMENTED ON NAVFAC DRAWINGS NO. 12510566 THROUGH 12510701.

SYMBOL LEGEND

- EXISTING WALL OR PARTITION
- EXISTING DOOR
- NEW WALL OR PARTITION
- NEW DOOR & NUMBER
- HIGH BAY TRAINERS ACCESS BAY 101 — ROOM NAME & NUMBER

CEILING NOTES

1. SUSPENDED 2' x 2' LAY-IN ACOUSTICAL CEILING PANELS.
2. SUSPENDED PAINTED 1/2" GYPSUM BOARD CEILING.
3. PAINTED EXPOSED STRUCTURE AND UNDERSIDE OF ROOF DECK.
4. EXISTING LAY-IN ACOUSTICAL CEILING SYSTEM.
5. EXISTING PAINTED EXPOSED STRUCTURE.
6. EXISTING SUSPENDED PAINTED 1/2" GYPSUM BOARD SOFFIT.

PLAN NORTH

GRAPHIC SCALE

1/16"=1'-0" 0' 8' 16' 32'

SYM	DESCRIPTION	DATE	APPR

NAVFAC

SEAL

A/E INFO.

APPROVED

FOR COMMANDER NAVFAC

ACTIVITY

SATISFACTORY TO DATE

DES LAS DRW LAS CHK TLD

PM/DM M. PERRY/L. SANDERS

BRANCH MANAGER TLD

CHIEF ENG/ARCH RW

FIRE PROTECTION

DEPARTMENT OF THE NAVY
NAVAL FACILITIES ENGINEERING COMMAND
HAMPTON ROADS IPT
NAVAL FACILITIES ENGINEERING COMMAND - MIDATLANTIC
NAVAL STATION - NORFOLK, VIRGINIA
NAVAL STATION NORFOLK
NORFOLK, VIRGINIA

FY 2016 P-518
MH-60 AVET TRAINING FACILITY

REFLECTED CEILING PLAN

SCALE: 1/16"=1'-0"

EPROJECT NO.: 1291639

CONSTR. CONTR. NO.

NAVFAC DRAWING NO.
12701653

SHEET 57 OF 109

A-103

DRAWFORM REVISION: 10 MARCH 2009

FILE NAME: P:\VA\NavalStationNorfolk\MILCON\2016_1291639_P-518_DBB_MH-60 AVET Training Facility\B_Design\Drawings\Sheet Files\08_Architecture\A-101.dwg LAYOUT NAME: A-103 PLOTTED: Monday, September 28, 2015 - 8:24am USER: luis.sanders

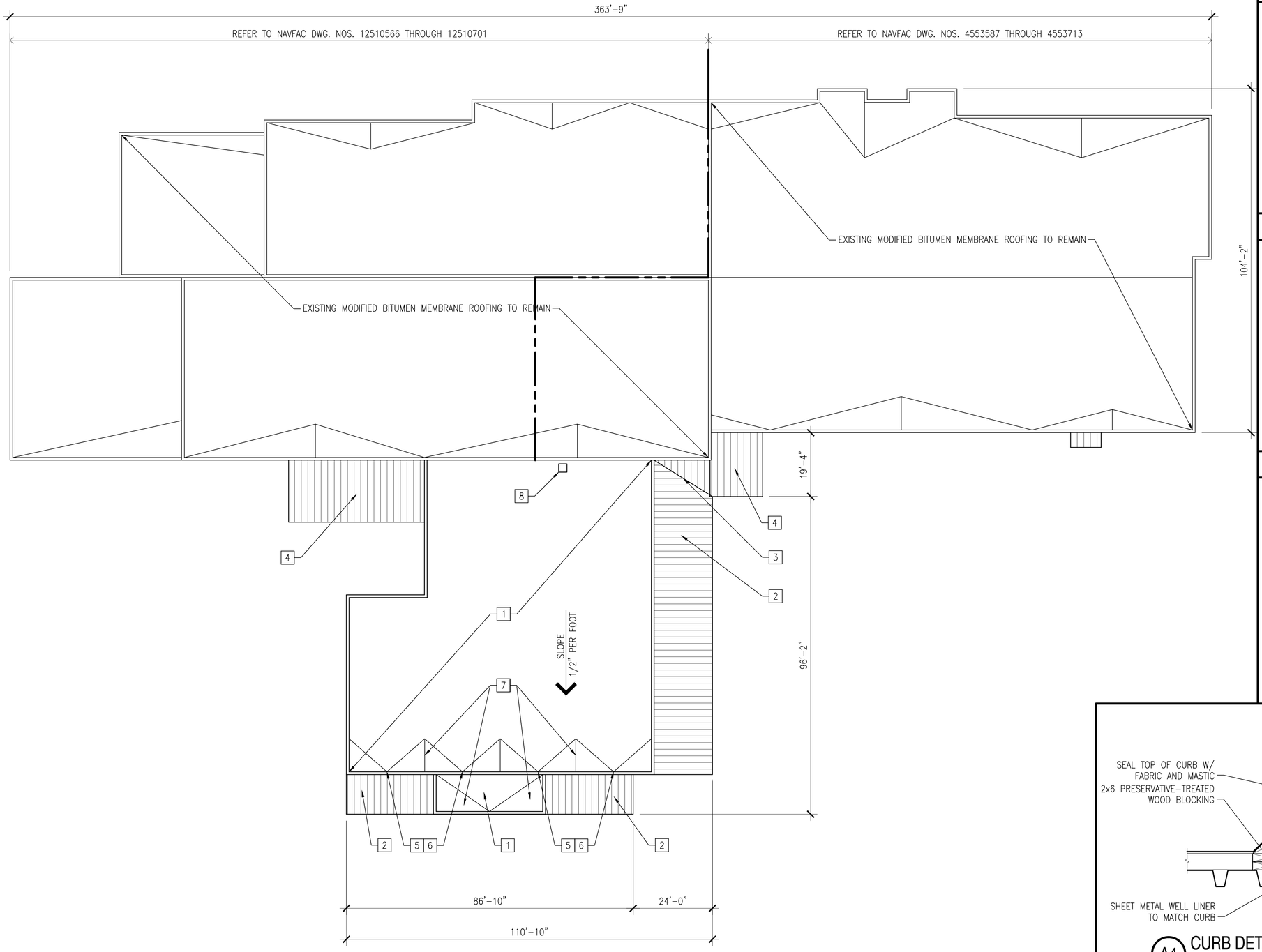

ROOF PLAN

SCALE: 1/16"=1'-0"

GENERAL SHEET NOTES

1. THE EXISTING BUILDING SP-250 WAS CONSTRUCTED IN TWO WINGS. THE EAST WING WAS CONSTRUCTED AS P-705 AND IS DOCUMENTED ON NAVFAC DRAWINGS NO. 4553587 THROUGH 4553713. THE WEST WING WAS CONSTRUCTED AS P-707 AND IS DOCUMENTED ON NAVFAC DRAWINGS NO. 12510566 THROUGH 12510701.

ROOF DRAINAGE CALCULATION

1. TOTAL ROOF AREA "A" = 7,903 SF
2. 100-YEAR, 1-HOUR RAINFALL PER VIRGINIA PLUMBING CODE FIGURE 1106.1 = 3.5 INCHES
3. 7,903 SF / 4 CONDUCTOR HEADS = 1,976 SF PER CONDUCTOR HEAD
4. MINIMUM CONDUCTOR HEAD DIAMETER PER VIRGINIA STATE PLUMBING CODE TABLE 1106.2 = 3 INCHES
5. SCUPPER SIZE PROVIDED = 4" x 8"
6. DOWNSPOUT SIZE PROVIDED = 4" DIAMETER

NEW WORK KEYNOTES

1. MODIFIED BITUMEN MEMBRANE ROOFING SYSTEM ON 4" RIGID INSULATION.
2. STANDING SEAM METAL ROOFING SYSTEM ON 4" RIGID INSULATION.
3. FORMED METAL VALLEY FLASHING.
4. EXISTING STANDING SEAM METAL ROOFING SYSTEM.
5. 4" H x 8" W THROUGH-WALL SCUPPER.
6. 4" DIAMETER DOWNSPOUT.
7. TAPERED INSULATION CRICKETS.
8. CURB-MOUNTED EXHAUST FAN. SEE DETAIL A4, THIS SHEET.

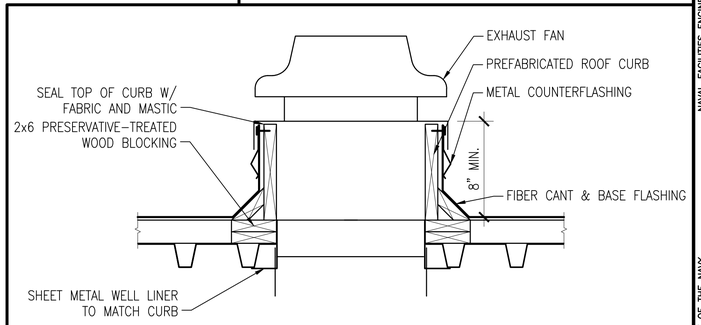

A4 CURB DETAIL

SCALE: NO SCALE

A-104

PLAN NORTH

GRAPHIC SCALE

1/16"=1'-0" 0' 8' 16' 32'

SYM	DESCRIPTION	DATE	APPR

SEAL

A/E INFO

APPROVED

FOR COMMANDER NAVFAC

ACTIVITY

SATISFACTORY TO DATE

DES LAS DRW LAS CHK TLD

PM/DM M. PERRY/L. SANDERS

BRANCH MANAGER TLD

CHIEF ENG/ARCH RW

FIRE PROTECTION

DEPARTMENT OF THE NAVY
NAVAL FACILITIES ENGINEERING COMMAND - MIDATLANTIC
HAMPTON ROADS IPT
NAVAL STATION NORFOLK

NAVAL FACILITIES ENGINEERING COMMAND
NAVAL STATION - NORFOLK, VIRGINIA
NORFOLK, VIRGINIA

FY 2016 P-518
MH-60 AVET TRAINING FACILITY

ROOF PLAN

SCALE: 1/16"=1'-0"

EPROJECT NO.: 1291639

CONSTR. CONTR. NO.

NAVFAC DRAWING NO. 12701654

SHEET 58 OF 109

A-104

DRAWFORM REVISION: 10 MARCH 2009

FILE NAME: P:\VA\NorfolkNavalA\MILCON\2016_1291639_P-518_DRB_MH-60 AVET Training Facility\B_Design\Drawings\Sheet Files\08_Architectural\A-101.dwg LAYOUT NAME: A-104 PLOTTED: Monday, September 28, 2015 - 8:25am USER: louis.sanders

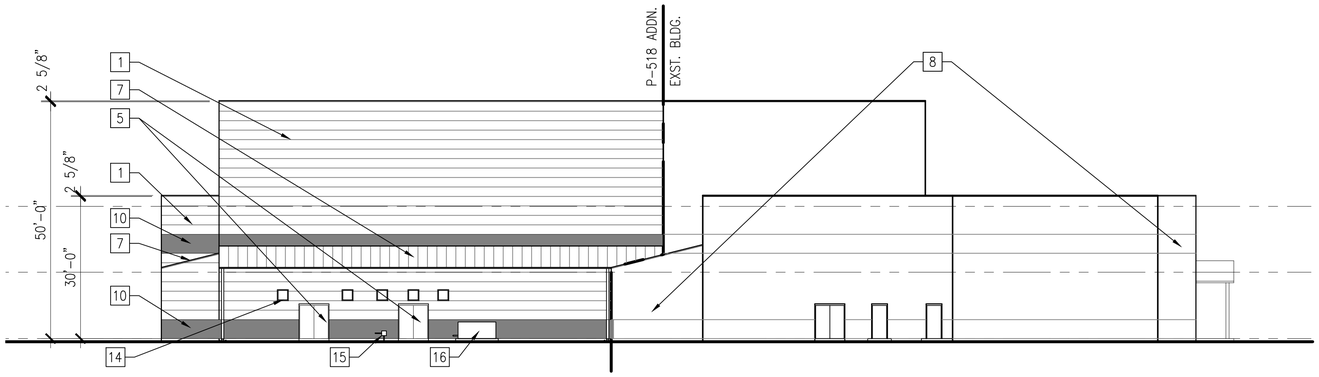

A EAST BUILDING ELEVATION

SCALE: 1/16"=1'-0" A-101

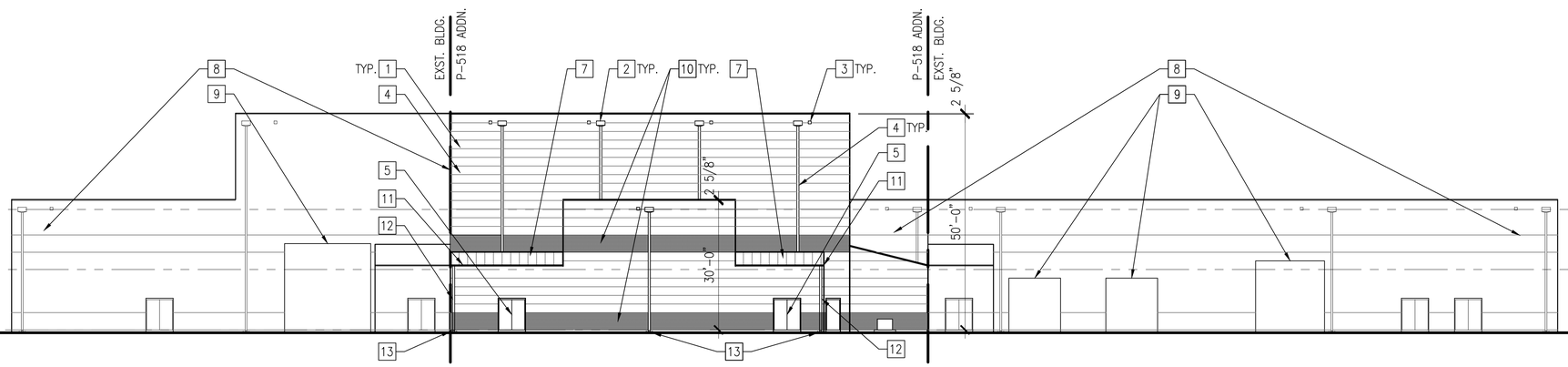

B SOUTH BUILDING ELEVATION

SCALE: 1/16"=1'-0" A-101

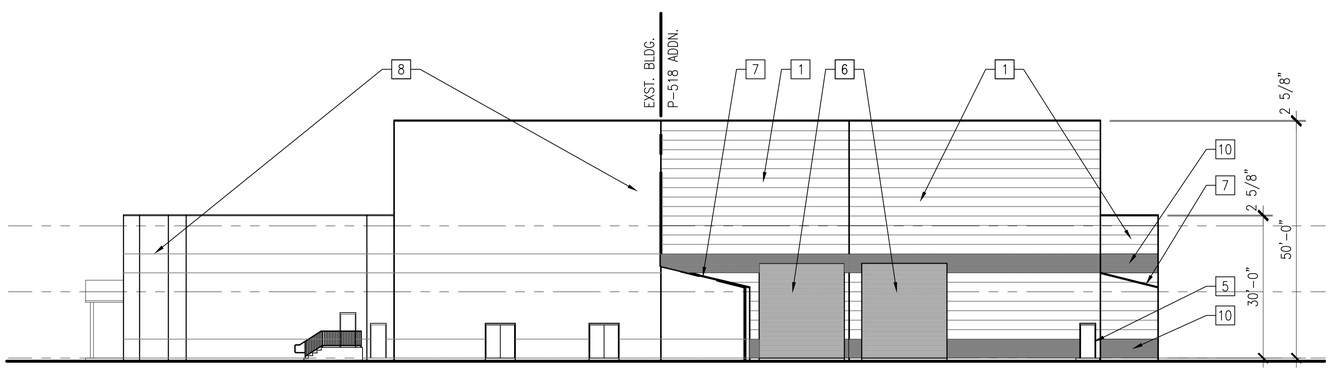

C WEST BUILDING ELEVATION

SCALE: 1/16"=1'-0" A-101

GENERAL SHEET NOTES

1. ALL SPACES LABELED AS "EXISTING" SHALL REMAIN UNDISTURBED UNLESS OTHERWISE INDICATED BY SPECIFIC DEMOLITION OR NEW WORK KEYNOTES.
2. DIMENSIONS OF EXISTING CONDITIONS ARE SHOWN TO FACE OF FINSH.
3. DIMENSIONS OF EXTERIOR NEW WORK ARE SHOWN TO FACE OF GIRT.
4. DIMENSIONS OF INTERIOR NEW WORK ARE SHOWN TO FACE OF STUDS OR FACE OF MASONRY.

NEW WORK KEYNOTES

1. INSULATED PREFINISHED METAL WALL PANEL TO MATCH THICKNESS, COLOR, AND PROFILE OF EXISTING.
2. 24"Wx12"H PREFINISHED METAL CONDUCTOR HEAD TO MATCH WALL PANEL COLOR.
3. 8"x8" OVERFLOW SCUPPER.
4. 6"x6" DOWNSPOUT.
5. GALVANIZED INSULATED H.M. DOOR & FRAME. TYPICAL ALL LOCATIONS.
6. INSULATED COILING OVERHEAD DOOR.
7. STANDING SEAM METAL ROOF.
8. EXISTING CONSTRUCTION TO REMAIN.
9. EXISTING REMOVABLE WALL PANEL.
10. WALL PANEL ACCENT COLOR BAND.
11. 6" W x 4" H PREFINISHED METAL GUTTER TO MATCH WALL PANEL COLOR.
12. 4"x4" DOWNSPOUT.
13. PRECAST CONCRETE SPLASHBLOCK.
14. EXTRUDED ALUMINUM LOUVER.
15. GAS METER.
16. CLOSED CIRCUIT CHILLER. SEE SHEET M-401

GRAPHIC SCALE

1/16"=1'-0" 0' 8' 16' 32'

SYM	DESCRIPTION	DATE	APPR

NAVFAC

SEAL

A/E INFO

APPROVED

FOR COMMANDER NAVFAC

ACTIVITY

SATISFACTORY TO DATE

DES LAS DRW LAS CHK TLD

PM/DM M. PERRY/L. SANDERS

BRANCH MANAGER TLO

CHIEF ENG/ARCH RW

FIRE PROTECTION

DEPARTMENT OF THE NAVY
NAVAL FACILITIES ENGINEERING COMMAND
NAVAL FACILITIES ENGINEERING COMMAND - MIDATLANTIC
HAMPTON ROADS IPT NAVAL STATION - NORFOLK, VIRGINIA
NAVAL STATION NORFOLK NORFOLK, VIRGINIA

FY 2016 P-518
MH-60 AVET TRAINING FACILITY

BUILDING ELEVATIONS

SCALE: 1/16"=1'-0"

EPROJECT NO.: 1291639

CONSTR. CONTR. NO.

NAVFAC DRAWING NO.
12701655

SHEET 59 OF 109

A-201

DRAWFORM REVISION: 10 MARCH 2009

FILE NAME: P:\VA\NavalStationNorfolk\WLCON\2016_1291639_P-518_DBB_MH-60 AVET Training Facility\B_Design\Drawings\Sheet Files\08_Architectural\A-201.dwg LAYOUT NAME: A-201 PLOTTED: Monday, September 28, 2015 - 8:29am USER: luis.sanders

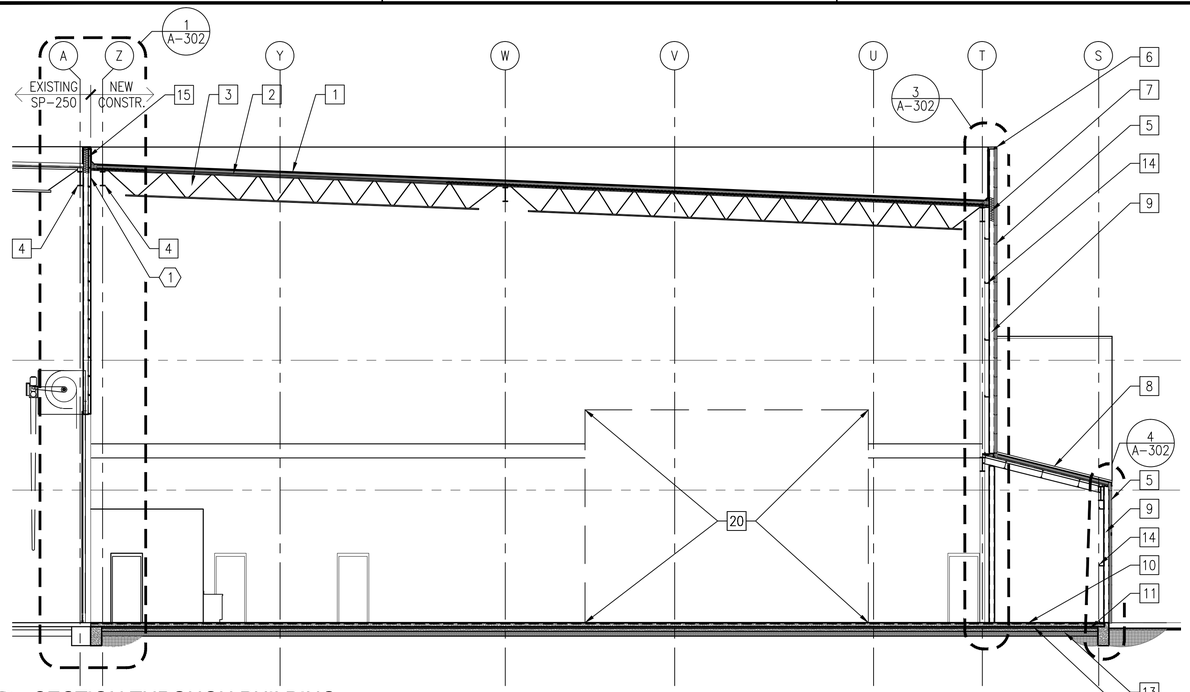

1 SECTION THROUGH BUILDING
SCALE: 1/8"=1'-0" A-101

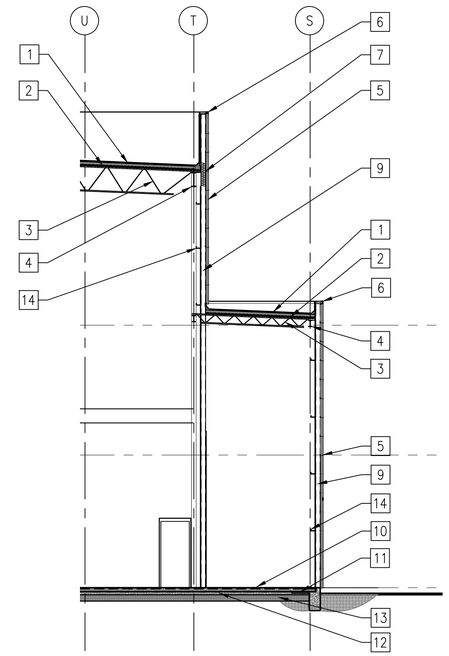

3 PARTIAL SECTION
SCALE: 1/8"=1'-0" A-101

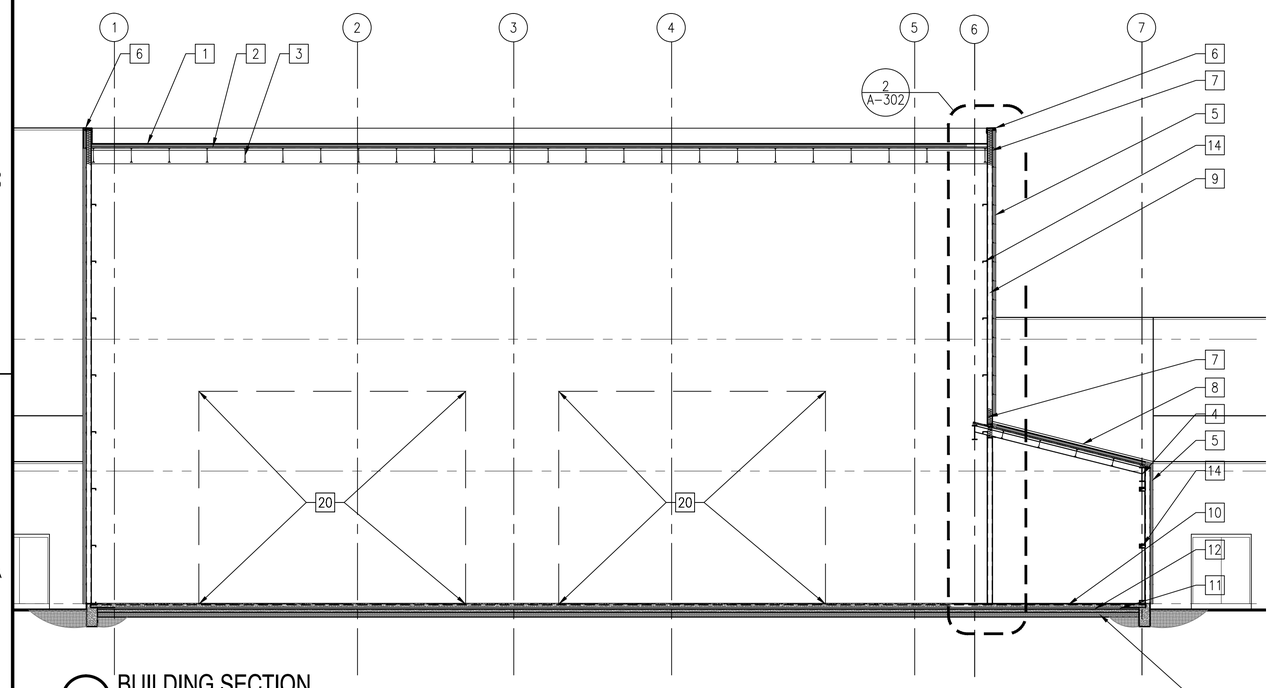

2 BUILDING SECTION
SCALE: 1/8"=1'-0" A-101

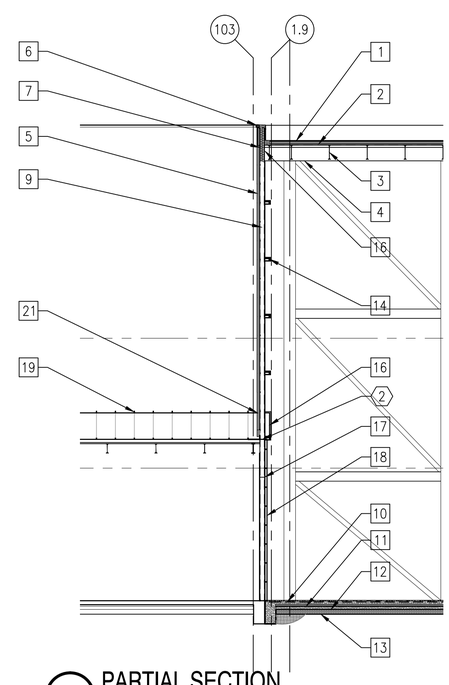

4 PARTIAL SECTION
SCALE: 1/8"=1'-0" A-101

GENERAL SHEET NOTES

1. ALL SPACES LABELED AS "EXISTING" SHALL REMAIN UNDISTURBED UNLESS OTHERWISE INDICATED BY SPECIFIC DEMOLITION OR NEW WORK KEYNOTES.
2. DIMENSIONS OF EXISTING CONDITIONS ARE SHOWN TO FACE OF FINSH.
3. DIMENSIONS OF EXTERIOR NEW WORK ARE SHOWN TO FACE OF GIRT.
4. DIMENSIONS OF INTERIOR NEW WORK ARE SHOWN TO FACE OF STUDS OR FACE OF MASONRY.

DEMOLITION KEYNOTES

1. REMOVE TOPMOST TWO ROWS OF EXISTING PREFINISHED METAL PANELS WHERE NEW CONSTRUCTION ABUTS EXISTING BUILDING.
2. REMOVE COPING COMPLETELY. SAW CUT AND REMOVE PORTION OF STANDING SEAM ROOFING, INSULATION, AND DECK TO EXPOSE TOP OF EXISTING METAL STUD FRAMING.

NEW WORK KEYNOTES

1. MODIFIED BITUMEN MEMBRANE ROOFING OVER 4" RIGID INSULATION.
2. 1½" STEEL ROOF DECK.
3. STEEL ROOF JOISTS.
4. STRUCTURAL STEEL FRAME.
5. INSULATED PREFINISHED METAL WALL PANEL TO MATCH THICKNESS, COLOR, AND PROFILE OF EXISTING.
6. PREFINISHED METAL COPING TO MATCH COLOR OF WALL PANELS.
7. PROVIDE BATT INSULATION WHERE INDICATED.
8. STANDING SEAM METAL ROOFING.
9. 6" METAL STUDS AT 2'-0" ON CENTER.
10. 5" REINFORCED CONCRETE SLAB ON GRADE.
11. CONTINUOUS 2" THICK RIGID UNDER-SLAB INSULATION.
12. 4" SAND BED OVER VAPOR BARRIER.
13. GRAVEL BASE LAYER.
14. STEEL GIRT.
15. 1/2" x 30" SHEATHING BOARD SECURED TO EXISTING STUDS.
16. SLOPE STEEL GIRT TO MATCH EXISTING ADJACENT ROOF SLOPE.
17. LAP NEW 6" METAL STUDS 4'-0" OVER EXISTING STUDS.
18. EXISTING INSULATED METAL WALL PANEL.
19. EXISTING STANDING SEAM METAL ROOFING.
20. RANGE-OF-MOTION FOOTPRINT OF FULL MOTION F/OFT SIMULATOR. (N.I.C.)
21. PREFINISHED METAL FLASHING TO MATCH COLOR OF ROOFING.

GRAPHIC SCALE

1/8"=1'-0" 0' 4' 8' 16'

SYM	DESCRIPTION	DATE	APPR

NAVFAC

SEAL

A/E INFO

APPROVED

FOR COMMANDER NAVFAC

ACTIVITY

SATISFACTORY TO DATE

DES LAS DRW LAS CHK TLD

PM/DM M. PERRY/L. SANDERS

BRANCH MANAGER TLD

CHIEF ENG/ARCH RW

FIRE PROTECTION

DEPARTMENT OF THE NAVY
NAVAL FACILITIES ENGINEERING COMMAND
HAMPTON ROADS IPT

NAVAL FACILITIES ENGINEERING COMMAND - MIDATLANTIC
NAVAL STATION - NORFOLK, VIRGINIA

NAVAL STATION NORFOLK
NORFOLK, VIRGINIA

FY 2016 P-518
MH-60 AVET TRAINING FACILITY

BUILDING SECTIONS

SCALE: 1/8"=1'-0"

EPROJECT NO.: 1291639

CONSTR. CONTR. NO.

NAVFAC DRAWING NO.
12701656

SHEET 60 OF 109

A-301

DRAWFORM REVISION: 10 MARCH 2009

FILE NAME: P:\VA\NavalStationNorfolk\MILCON\2016_1291639_P-518_DRB_MH-60 AVET Training Facility\B_Design\Drawings\Sheet Files\08_Architecture\A-301.dwg LAYOUT NAME: A-301 PLOTTED: Friday, September 25, 2015 - 1:29pm USER: louis.sanders

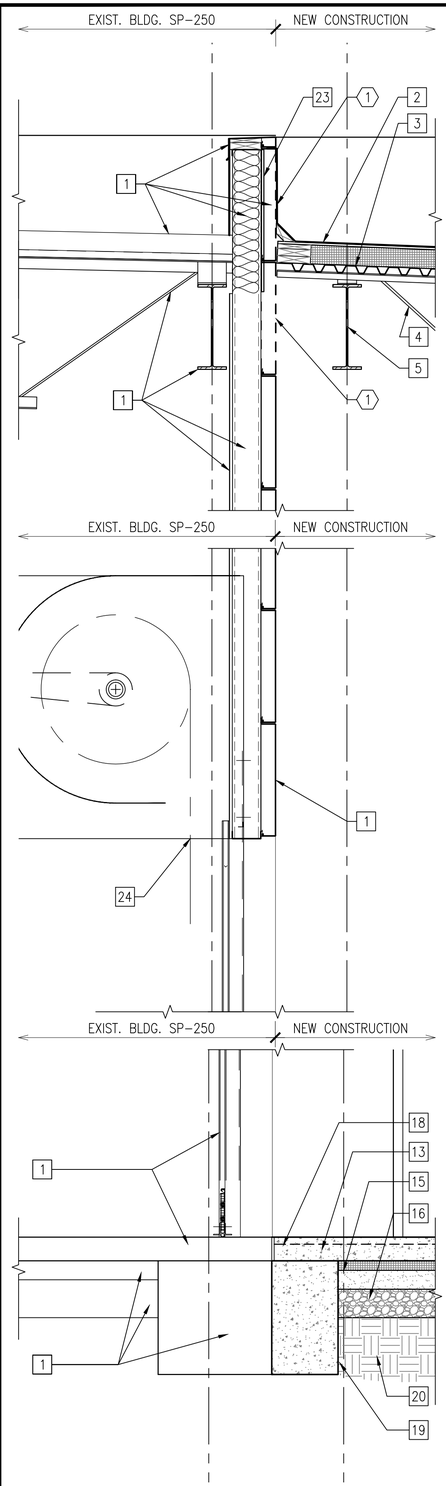

1 WALL SECTION
SCALE: 3/4"=1'-0" A-101

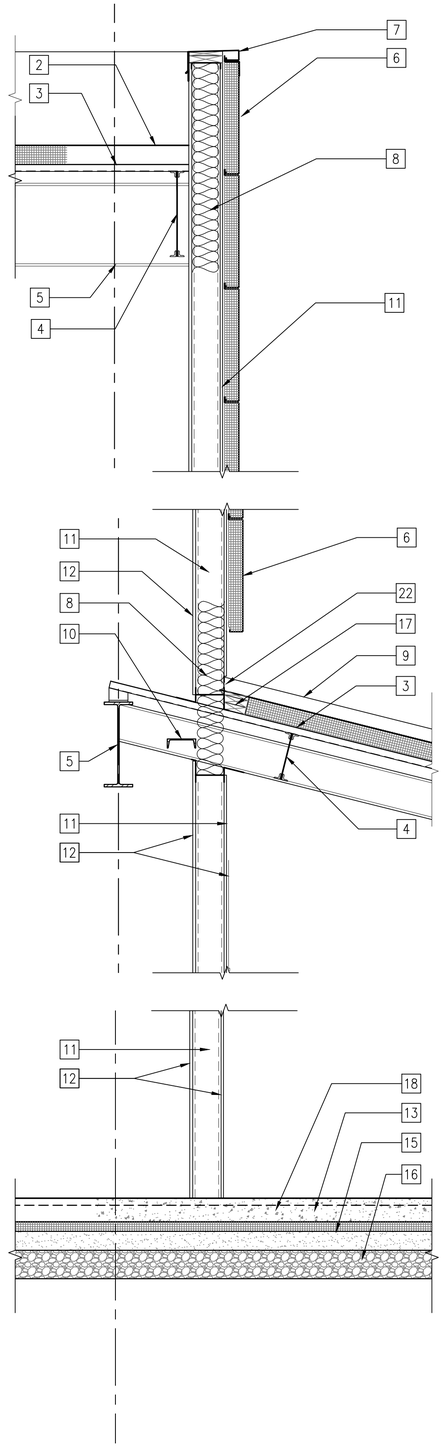

2 WALL SECTION
SCALE: 3/4"=1'-0" A-101

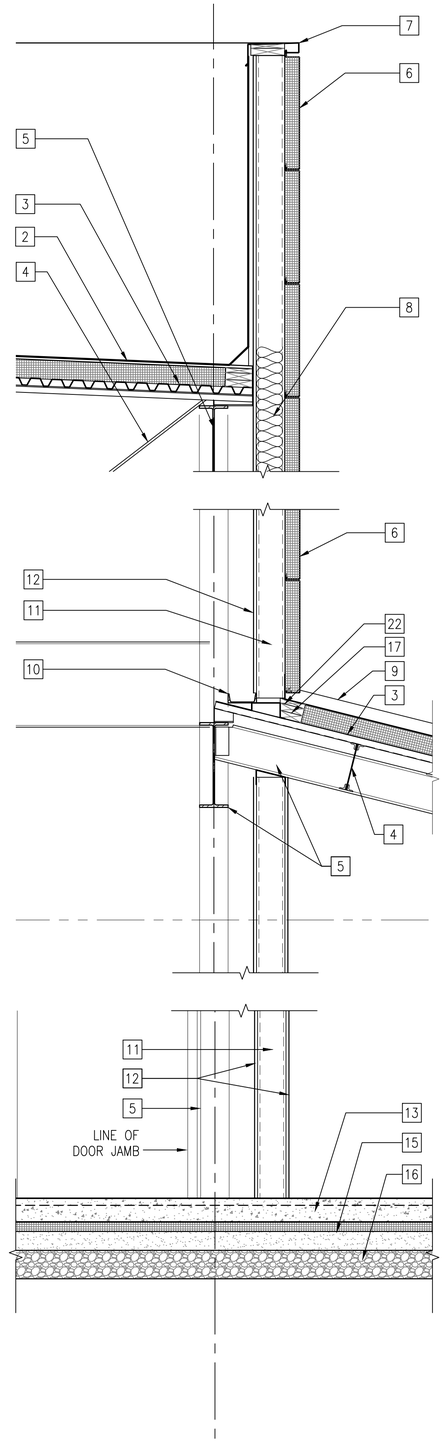

3 WALL SECTION
SCALE: 3/4"=1'-0" A-101

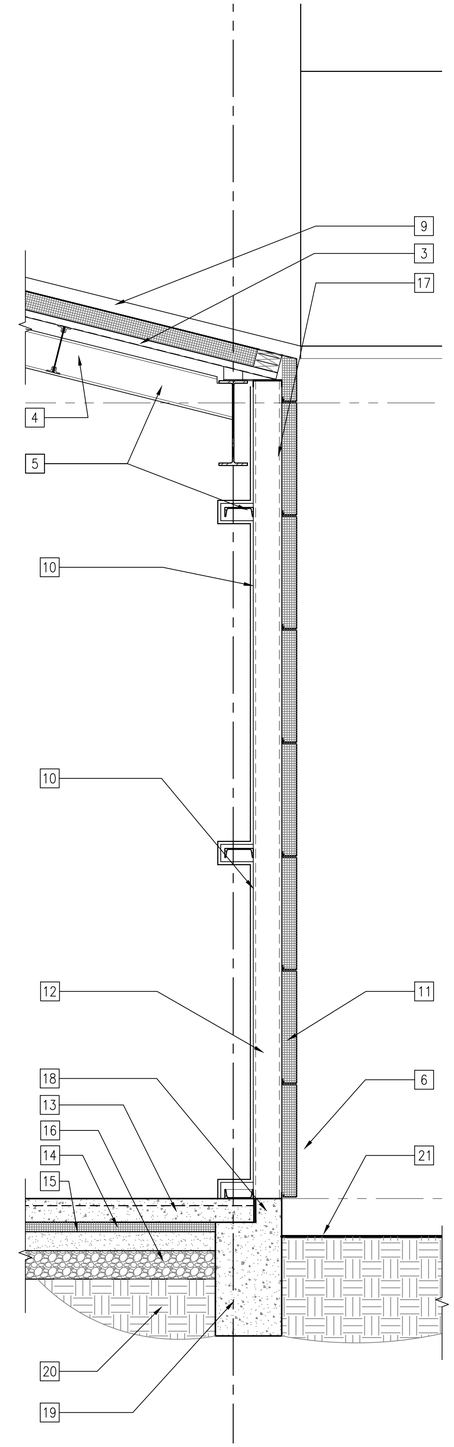

4 WALL SECTION
SCALE: 3/4"=1'-0" A-101

GENERAL SHEET NOTES

1. ALL SPACES LABELED AS "EXISTING" SHALL REMAIN UNDISTURBED UNLESS OTHERWISE INDICATED BY SPECIFIC DEMOLITION OR NEW WORK KEYNOTES.
2. DIMENSIONS OF EXISTING CONDITIONS ARE SHOWN TO FACE OF FINSH.
3. DIMENSIONS OF EXTERIOR NEW WORK ARE SHOWN TO FACE OF GIRT.
4. DIMENSIONS OF INTERIOR NEW WORK ARE SHOWN TO FACE OF STUDS OR FACE OF MASONRY.

DEMOLITION KEYNOTES

1. REMOVE TOPMOST TWO ROWS OF EXISTING PREFINISHED METAL PANELS WHERE NEW CONSTRUCTION ABUTS EXISTING BUILDING.

NEW WORK KEYNOTES

1. EXISTING CONSTRUCTION TO REMAIN.
2. MODIFIED BITUMEN MEMBRANE ROOFING OVER 4" RIGID INSULATION.
3. 1½" STEEL ROOF DECK.
4. STEEL ROOF JOISTS.
5. STRUCTURAL STEEL FRAME.
6. INSULATED PREFINISHED METAL WALL PANEL TO MATCH THICKNESS, COLOR, AND PROFILE OF EXISTING.
7. PREFINISHED METAL COPING TO MATCH COLOR OF WALL PANELS.
8. PROVIDE BATT INSULATION AT THERMAL BRIDGES WHERE INDICATED.
9. STANDING SEAM METAL ROOFING OVER 4" RIGID INSULATION.
10. 6" STEEL GIRTS AT 6'-0" VERTICAL SPACING.
11. 6" METAL STUDS @ 2'-0" CENTERS.
12. ⅝" GYPSUM BOARD.
13. 5" REINFORCED CONCRETE SLAB ON GRADE.
14. CONTINUOUS 2" THICK RIGID UNDER-SLAB INSULATION.
15. 4" SAND BED OVER VAPOR BARRIER.
16. GRAVEL BASE LAYER.
17. PRESERVATIVE TREATED WOOD BLOCKING.
18. ½" ASPHALT-IMPREGNANTED EXPANSION MATERIAL.
19. CONTINUOUS CONCRETE GRADE BEAM.
20. EARTH BACKFILL.
21. FINISH GRADE.
22. PREFINISHED METAL FLASHING TO MATCH COLOR OF ROOFING.
23. 1/2"x30" SHEATHING BOARD SECURED TO EXISTING STUDS.
24. INSULATED COILING OVERHEAD DOOR.

GRAPHIC SCALE

3/4"=1'-0" 0 1' 2' 3'

SYM	DESCRIPTION	DATE	APPR

NAVFAC

SEAL

A/E INFO

APPROVED

FOR COMMANDER NAVFAC

ACTIVITY

SATISFACTORY TO DATE

DES LAS DRW LAS CHK TLD

PM/DM M. PERRY/L. SANDERS

BRANCH MANAGER TLD

CHIEF ENG/ARCH RW

FIRE PROTECTION

DEPARTMENT OF THE NAVY
NAVAL FACILITIES ENGINEERING COMMAND
HAMPTON ROADS PT.

NAVAL FACILITIES ENGINEERING COMMAND - MIDATLANTIC
NAVAL STATION - NORFOLK, VIRGINIA

NAVAL STATION NORFOLK

NORFOLK, VIRGINIA

FY 2016 P-518
MH-60 AVET TRAINING FACILITY

WALL SECTIONS

SCALE: 3/4"=1'-0"
EPROJECT NO.: 1291639
CONSTR. CONTR. NO.
NAVFAC DRAWING NO. 12701657
SHEET 61 OF 109

A-302

DRAWFORM REVISION: 10 MARCH 2009

FILE NAME: P:\VA\NavalStationNorfolk\MILCON\2016_1291639_P-518_DBB_MH-60 AVET Training Facility\B_Design\Drawings\Sheet Files\08_Architecture\A-302.dwg LAYOUT NAME: A-302 PLOTTED: Monday, September 28, 2015 - 8:37am USER: luis.sanders

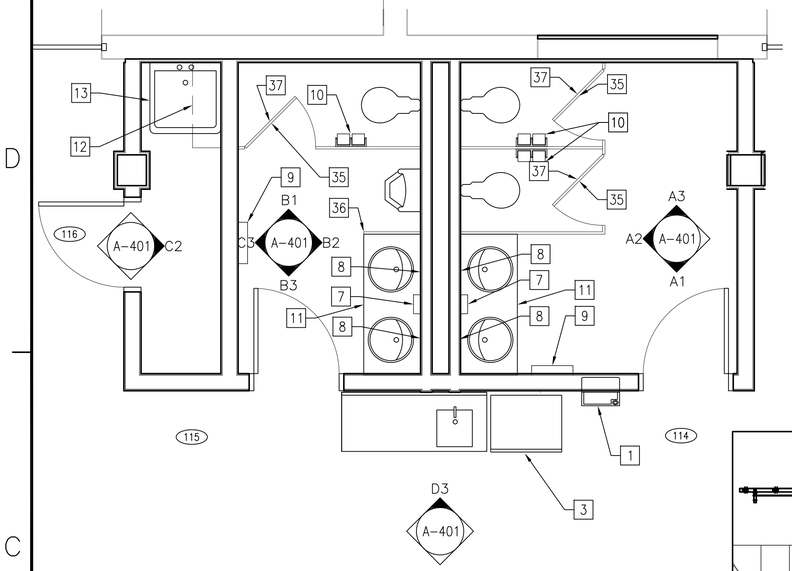

C1 ENLARGED TOILET & COFFEE MESS PLAN
SCALE: 3/8"=1'-0" A-102

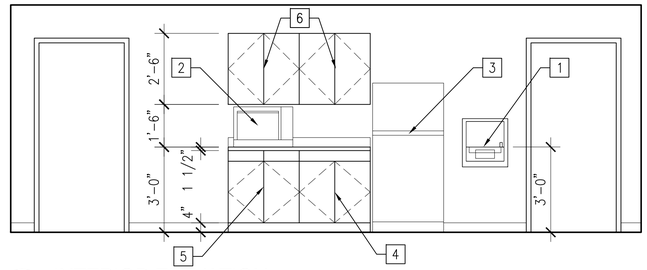

D3 INTERIOR ELEVATION
SCALE: 3/8" = 1'-0" A-102

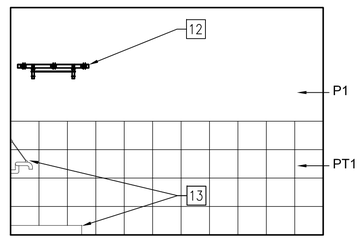

C2 INTERIOR ELEVATION
SCALE: 3/8" = 1'-0" A-102

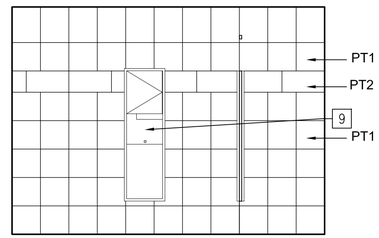

C3 INTERIOR ELEVATION
SCALE: 3/8" = 1'-0" A-102

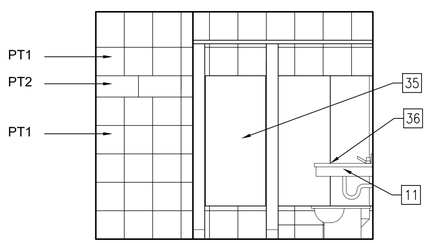

B1 INTERIOR ELEVATION
SCALE: 3/8" = 1'-0" A-102

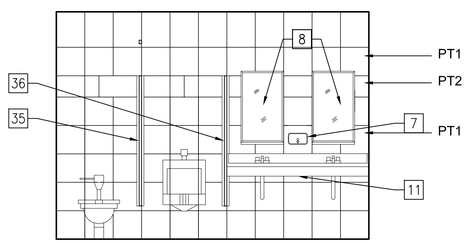

B2 INTERIOR ELEVATION
SCALE: 3/8" = 1'-0" A-102

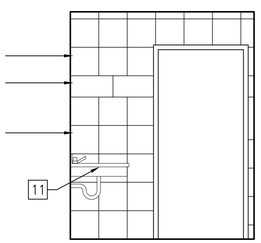

B3 INTERIOR ELEVATION
SCALE: 3/8" = 1'-0" A-102

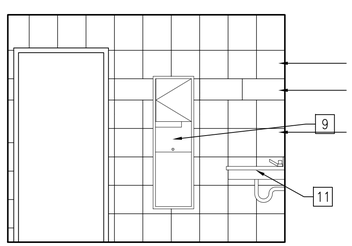

A1 INTERIOR ELEVATION
SCALE: 3/8" = 1'-0" A-102

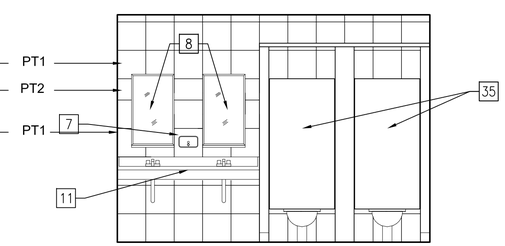

A2 INTERIOR ELEVATION
SCALE: 3/8" = 1'-0" A-102

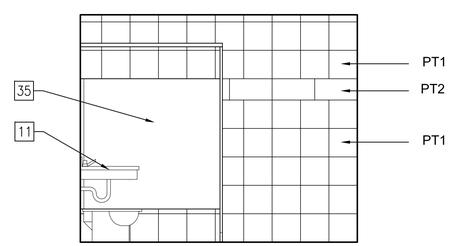

A3 INTERIOR ELEVATION
SCALE: 3/8" = 1'-0" A-102

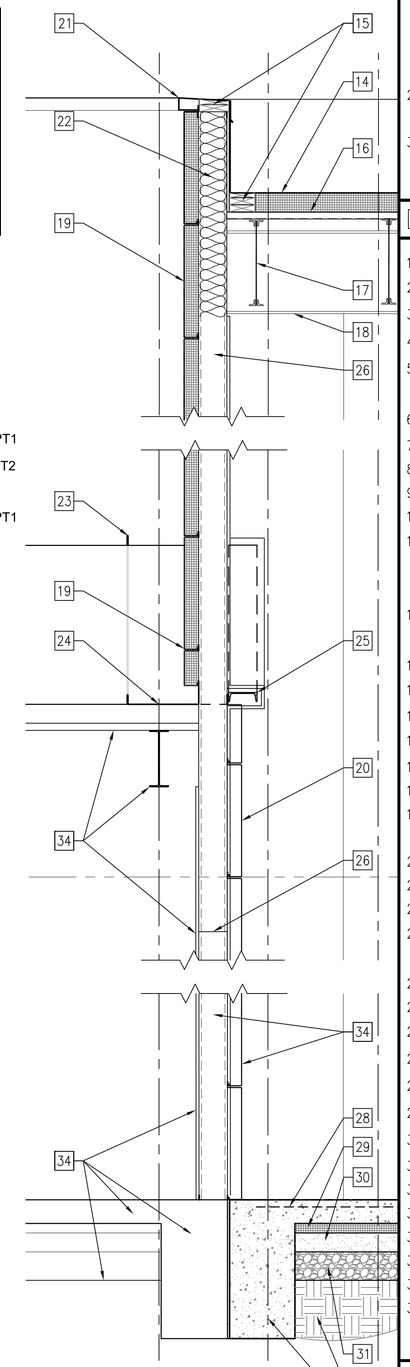

4 WALL SECTION
SCALE: 3/4" = 1'-0" A-301

GENERAL SHEET NOTES

1. THE EXISTING BUILDING SP-250 WAS CONSTRUCTED IN TWO WINGS. THE EAST WING WAS CONSTRUCTED AS P-705 AND IS DOCUMENTED ON NAVFAC DRAWINGS NO. 4553587 THROUGH 4553713. THE WEST WING WAS CONSTRUCTED AS P-707 AND IS DOCUMENTED ON NAVFAC DRAWINGS NO. 12510566 THROUGH 12510701.
2. REFER TO SHEET I-601 (NAVFAC DWG. NO. 12701663) FOR FINISH MATERIAL SCHEDULE.
3. ALL OUTSIDE CORNERS AT RESTROOMS RECEIVE EDGE PROTECTION STRIP. SEE SHEET I-601 (NAVFAC DWG. NO. 12701663) FOR DETAILS.

NEW WORK KEYNOTES

1. ELECTRIC WATER COOLER.
2. MICROWAVE (FFE).
3. REFRIGERATOR (FFE).
4. SINK BASE CABINET 30"W x 34-1/2"H x 24"D. NO SHELVES.
5. BASE CABINET 30"W x 34-1/2"H x 24"D. 1 FIXED SHELF & 2 DRAWERS.
6. (2) WALL CABINETS 30"W x 30"H x 12"D. 1 ADJUSTABLE SHELF.
7. SOAP DISPENSER.
8. MIRROR.
9. COMBINATION TOWEL DISPENSER & WASTE RECEPTACLE.
10. TOILET TISSUE DISPENSER.
11. SOLID SURFACE COUNTERTOP, 4" HIGH BACKSPLASH, SIDE SPLASHES, AND APRON. COUNTERTOP & BACKSPLASH ONLY @ COFFEE MESS
12. SHELF WITH MOP & BROOM HOLDERS AND RAG HOOKS. SIMILAR TO BOBRICK #B-224x36 OR EQUIVALENT.
13. MOP SINK AND FAUCET.
14. MODIFIED BITUMEN MEMBRANE ROOFING OVER 4" RIGID INSULATION.
15. PRESERVATIVE TREATED WOOD BLOCKING.
16. 1 1/2" STEEL ROOF DECK.
17. STEEL ROOF JOISTS.
18. STRUCTURAL STEEL FRAME.
19. INSULATED PREFINISHED METAL WALL PANEL TO MATCH THICKNESS, COLORS, AND PROFILE OF EXISTING.
20. EXISTING PREFINISHED METAL WALL PANEL.
21. PREFINISHED METAL COPING TO MATCH COLOR OF WALL PANELS.
22. PROVIDE BATT INSULATION AT THERMAL BRIDGES WHERE INDICATED.
23. EXISTING STANDING SEAM METAL ROOFING OVER 4" RIGID INSULATION.
24. PREFINISHED METAL FLASHING TO MATCH COLOR OF ROOFING.
25. SLOPE STEEL GIRT TO FOLLOW ROOF SLOPE.
26. 6" METAL STUDS LAP 4'-0" OVER EXISTING STUDS @ 2'-0" O.C.
27. 5/8" GYPSUM BOARD.
28. 5" REINFORCED CONCRETE SLAB ON GRADE.
29. CONTINUOUS 2" THICK RIGID UNDER-SLAB INSULATION.
30. 4" SAND BED OVER VAPOR BARRIER.
31. GRAVEL BASE LAYER.
32. CONTINUOUS CONCRETE GRADE BEAM.
33. EARTH BACKFILL.
34. EXISTING CONSTRUCTION TO REMAIN.
35. SOLID PHENOLIC TOILET COMPARTMENT.
36. SOLID PHENOLIC URINAL SCREEN.
37. COAT HOOK

PLAN NORTH

GRAPHIC SCALES

3/4"=1'-0" 0 1' 2' 3'
3/8"=1'-0" 0' 2' 4' 6'

SYM	DESCRIPTION	DATE	APPR

NAVFAC

SEAL

A/E INFO

APPROVED

FOR COMMANDER NAVFAC

ACTIVITY

SATISFACTORY TO DATE

DES LAS DRW LAS CHK

PM/DM M. PERRY/L. SANDERS

BRANCH MANAGER TLO

CHIEF ENG/ARCH RW

FIRE PROTECTION

DEPARTMENT OF THE NAVY
NAVAL FACILITIES ENGINEERING COMMAND
HAMPTON ROADS IPT
NAVAL FACILITIES ENGINEERING COMMAND - MIDATLANTIC
NAVAL STATION - NORFOLK, VIRGINIA
NAVAL STATION NORFOLK
NORFOLK, VIRGINIA

FY 2016 P-518
MH-60 AVET TRAINING FACILITY

ENLARGED PLAN & ELEVATIONS

SCALE: 3/8"=1'-0"
EPROJECT NO. 1291639
CONSTR. CONTR. NO.
NAVFAC DRAWING NO. 12701658
SHEET 62 OF 109

A-401

DRAWFORM REVISION: 10 MARCH 2009

FILE NAME: P:\VA\NavalStationNorfolk\WLCON\2016_1291639_P-518_DBB_MH-60 AVET Training Facility\B_Design\Drawings\Sheet Files\08_Architectural\A-401.dwg LAYOUT NAME: A-401 PLOTTED: Friday, September 25, 2015 - 2:17pm USER: virginia.perry

DOOR SCHEDULE

DOOR NO	DOOR SIZE W X H X THK	DOOR TYPE	DOOR MATERIAL	FRAME TYPE	HEAD DETAIL	JAMB DETAIL	SILL DETAIL	HARDWARE SET	REMARKS
101	16'–0" X 20'–0"	6	OVERHEAD	––	H–1	J–1	S–1	HW–1	2, 23
102	16'–0" X 20'–0"	6	OVERHEAD	––	H–1	J–1	S–1	HW–1	2, 23
103	3'–0" X 7'–0" X 1 3/4"	3	INSUL MTL	B	H–2	J–2	S–2	HW–2	23, 24
104	3'–0" X 7'–0" X 1 3/4"	3	INSUL MTL	B	H–2	J–2	S–2	HW–2	23, 24
105	2–3'–0" X 7'–0" X 1 3/4"	5	INSUL MTL	A	H–2	J–2	S–2	HW–3	23
106	2–3'–0" X 7'–0" X 1 3/4"	5	INSUL MTL	A	H–2	J–2	S–2	HW–3	23
107	3'–0" X 7'–0" X 1 3/4"	3	HM	A	H–3	J–3	S–4	HW–101	
108	2–3'–0" X 7'–0" X 1 3/4"	1	HM	A	H–3	J–3	S–5	HW–103	
109	3'–0" X 7'–0" X 1 3/4"	3	HM	A	H–3	J–3	S–5	HW–101	
110	3'–0" X 7'–0" X 1 3/4"	2	HM	A	H–3	J–3	S–5	HW–101	
111	3'–0" X 7'–0" X 1 3/4"	2	HM	A	H–3	J–3	S–5	HW–101	
112	3'–0" X 7'–0" X 1 3/4"	3	HM	B	H–3	J–3	S–3	HW–101	
113	3'–0" X 7'–0" X 1 3/4"	3	HM	B	H–3	J–3	S–3	HW–101	
114	3'–0" X 7'–0" X 1 3/4"	4	HM	B	H–3	J–3	S–4	HW–102	25
115	3'–0" X 7'–0" X 1 3/4"	4	HM	B	H–3	J–3	S–4	HW–102	25
116	3'–0" X 7'–0" X 1 3/4"	4	HM	B	H–3	J–3	S–4	HW–104	

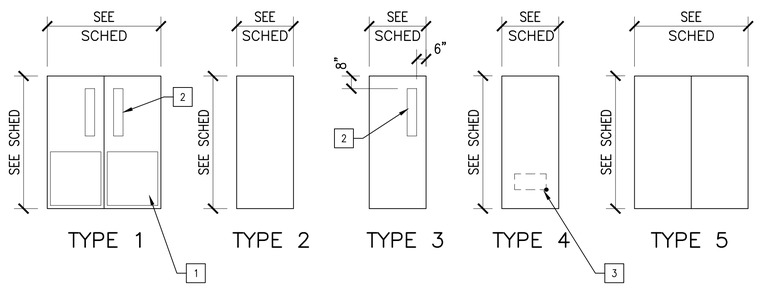

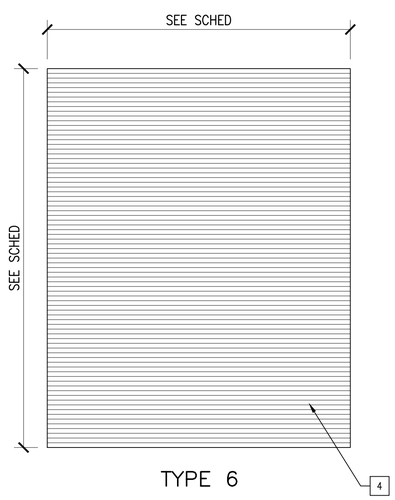

DOOR TYPES
SCALE 1/4" = 1'–0"

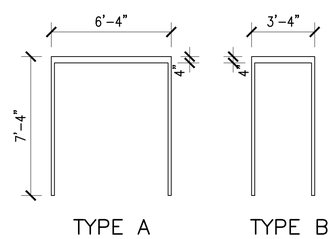

FRAME TYPES
SCALE 1/4" = 1'–0"

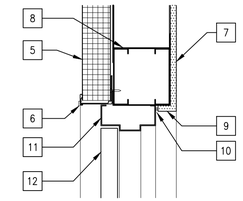

H2 HEAD
SCALE: 1 1/2"=1'–0" A–601

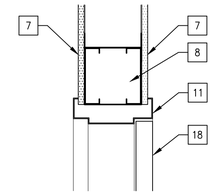

H3 HEAD
SCALE: 1 1/2"=1'–0" A–601

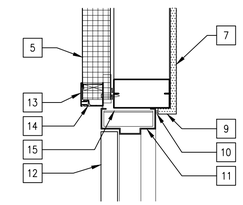

J2 JAMB
SCALE: 1 1/2"=1'–0" A–601

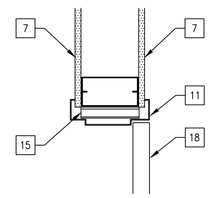

J3 JAMB
SCALE: 1 1/2"=1'–0" A–601

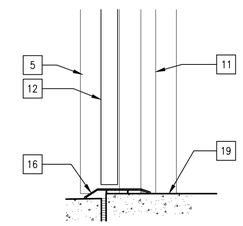

S2 SILL
SCALE: 1 1/2"=1'–0" A–601

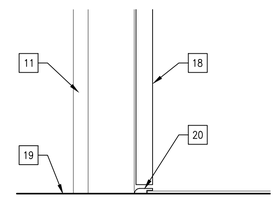

S3 SILL
SCALE: 1 1/2"=1'–0" A–601

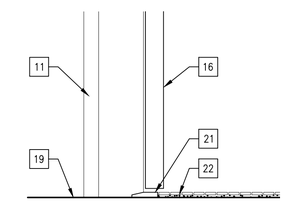

S4 SILL
SCALE: 1 1/2"=1'–0" A–601

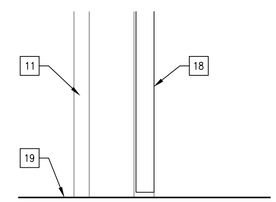

S5 SILL
SCALE: 1 1/2"=1'–0" A–601

GENERAL SHEET NOTES

1. THIS IS THE MULTI–LINE TEXT NOTE BLOCK FOR ALL NOTES (E.G. GENERAL, DEMOLITION, ETC...)
2. IT IS SET UP USING THE "NUMBERING" OUTLINE METHOD AND DOES NOT REQUIRE YOU TO NUMBER EACH LINE – THE OBJECT HANDLES IT AUTOMATICALLY (SIMILAR TO WORD'S NUMBERING FEATURE)
3. ADD A BLANK LINE BETWEEN NOTES FOR CORRECT SPACING

DOOR REMARKS

1. ARMOUR PLATE.
2. 6" X 30" VIEW LITE.
3. LOUVER, SEE LOUVER SCHEDULE ON X–XXX
4. INSULATED OVERHEAD COILING DOOR.
5. 3" INSULATED METAL WALL PANEL.
6. BASE EXTRUSION WITH WEEP HOLES.
7. 5/8" GYPSUM WALLBOARD.
8. METAL STUD BOXED LINTEL.
9. ADHERE 5/8" GYPSUM WALLBOARD TO SUBSTRATE AT RETURN.
10. SEALANT CONTINUOUS
11. HOLLOW METAL DOOR FRAME.
12. INSULATED METAL DOOR.
13. JAMB COVER EXTRUSION.
14. JAMB RETAINER EXTRUSION.
15. 3 ANCHORS PER JAMB.
16. ADA COMPLIANT EXTRUDED ALUMINUM THRESHOLD SET IN CONTINUOUS BED OF SEALANT.
17. THRESHOLD.
18. HOLLOW METAL DOOR.
19. REFER TO FINISH SCHEDULE FOR FLOORING.
20. RESILIENT TRANSITION STRIP UNDER DOOR WHERE RESILIENT FLOORING TERMINATES.
21. MARBLE THRESHOLD.
22. PORCELAIN FLOOR TILE.
23. EQUIP DOOR OPENING WITH INTRUSION DETECTION SYSTEM.
24. EXIT ONLY, NO EXTERIOR TRIM.
25. 16" x 16" ALUMINUM DOOR LOUVER.

PLAN NORTH

GRAPHIC SCALES

1/4"=1'–0" 0' 2' 4' 8'

1–1/2"=1'–0" 0 6" 1' 1'–6"

SYM	DESCRIPTION	DATE	APPR

NAVFAC

SEAL

A/E INFO

APPROVED

FOR COMMANDER NAVFAC

ACTIVITY

SATISFACTORY TO DATE

DES LAS DRW LAS CHK

PM/OM M. PERRY/L. SANDERS

BRANCH MANAGER

CHIEF ENG/ARCH

FIRE PROTECTION

DEPARTMENT OF THE NAVY
NAVAL FACILITIES ENGINEERING COMMAND
HAMPTON ROADS IPT
NAVAL FACILITIES ENGINEERING COMMAND - MIDATLANTIC
NAVAL STATION - NORFOLK, VIRGINIA
NAVAL STATION NORFOLK
NORFOLK, VIRGINIA

FY 2016 P-518
MH-60 AVET TRAINING FACILITY

DOOR SCHEDULE

SCALE: AS NOTED
EPROJECT NO.: 1291639
CONSTR. CONTR. NO.
NAVFAC DRAWING NO. 12701659
SHEET 63 OF 109

A-601

DRAWFORM REVISION: 10 MARCH 2009

FILE NAME: P:\VA\NavalStationNorfolk\MILCON\2016_1291639_P-518_DBB_MH-60 AVET Training Facility\B_Design\Drawings\Sheet Files\08_Architecture\A-601.dwg LAYOUT NAME: A-601 PLOTTED: Monday, September 28, 2015 - 8:38am USER: louis.sanders