LEGEND

GENERAL

1	CONSTRUCTION NOTE IDENTIFICATION
	INDICATES EXISTING ITEM
	INDICATES NEW ITEM
XXX	ROOM NUMBER IDENTIFICATION
AD	ACCESS DOOR
AFF	ABOVE FINISH FLOOR
SA	SUPPLY AIR
SAT	SUPPLY AIR TEMPERATURE
TYP	TYPICAL
UON	UNLESS OTHERWISE NOTED
VFD	VARIABLE FREQUENCY DRIVE
A 150	AIR TERMINAL TAG WITH AIR FLOW (CFM)

PIPING

D	CONDENSATE DRAIN PIPING
CDWS	CONDENSER WATER SUPPLY PIPING
CDWR	CONDENSER WATER RETURN PIPING
G	NATURAL GAS PIPING
RL	REFRIGERANT LIQUID PIPING
RS	REFRIGERANT SUCTION PIPING
	PIPE TURNING DOWN
	PIPE TURNING UP
	PITCH DOWN IN DIRECTION OF ARROW
M	GAS METER

DUCTWORK

	VERTICAL FIRE DAMPER
	INDICATES EXISTING ITEM
	FLEXIBLE DUCTWORK
	VOLUME DAMPER
	RADIUS ELBOW
	MITERED ELBOW WITH TURNING VANES
	SUPPLY DUCT, SUPPLY DUCT DOWN/UP
	RETURN/EXHAUST DUCT, RETURN/EXHAUST DUCT DOWN/UP
	DUCT CHANGE IN ELEVATION
	FLEXIBLE DUCT CONNECTOR
	RETURN/EXHAUST GRILLE
	SUPPLY DIFFUSER
MD	MOTORIZED DAMPER
	SUPPLY AIR FLOW
	RETURN/EXHAUST AIR FLOW

VALVES AND ACCESSORIES

	AUTOMATIC FLOW CONTROL VALVE
	ISOLATION VALVE
	2-WAY CONTROL VALVE
	CHECK VALVE
	MANUAL AIR VENT
PT	PRESSURE/TEMPERATURE TEST PLUG
	PRESSURE REDUCING VALVE
	PRESSURE RELIEF VALVE
	STRAINER
	UNION

DESIGN CONDITIONS

SPACE TYPE	COOLING		HEATING
	DB (°F)	WB (°F)	DB (°F)
OUTDOOR	91	77	21
MECH, ELEC	VENTILATED		40
TRAINERS	72	60	72
ALL OTHER AREAS	78	65	68

NOTE: UNOCCUPIED MODE FOR "ALL OTHER AREAS": COOLING 80°F, HEATING 60°F

GENERAL NOTES

1. THESE GENERAL MECHANICAL NOTES APPLY TO THE ALL MECHANICAL DRAWINGS IN THIS SET. SHEET SPECIFIC NOTES ARE INDICATED ON EACH SHEET UNDER GENERAL SHEET NOTES.
2. THE CONTRACTOR SHALL PROVIDE A COMPLETE HVAC SYSTEM TO INCLUDE ALL LABOR, MATERIALS, TOOLS, AND EQUIPMENT FOR A COMPLETE AND FUNCTIONAL SYSTEM INCLUDING ALL NECESSARY APPURTENANCES CUSTOMARILY INCLUDED IF NOT SPECIFICALLY CALLED OUT.
3. ENTIRE INSTALLATION, INCLUDING MATERIALS, EQUIPMENT, AND WORKMANSHIP, SHALL CONFORM WITH ALL APPLICABLE LAWS, CODES, AND REGULATIONS OF MUNICIPAL, STATE, AND FEDERAL AUTHORITIES, ALSO THE LATEST ADDITION OF THE STATE BUILDING CODES, APPLICABLE ASHRAE, NFPA, AND SMACNA STANDARDS AND OTHER REGULATORY BODIES HAVING JURISDICTION OVER THE CLASS OF WORK. WHERE APPLICABLE, MATERIALS AND EQUIPMENT SHALL HAVE STAMPS OR SEALS OF ARI, ASME, UL, OR ASTM. THE CONTRACTOR SHALL MAKE TESTS FOR ACCEPTANCE AND APPROVAL BY CODE AND THE REQUIREMENTS OF APPLICABLE REGULATORY AGENCIES. REQUIRED TESTS SHALL BE PERFORMED IN THE PRESENCE OF THE GOVERNMENT UNLESS OTHERWISE WAIVED IN WRITING.
4. INSTALL ALL MECHANICAL EQUIPMENT AND APPURTENANCES IN ACCORDANCE WITH MANUFACTURER'S RECOMMENDATIONS, THIS CONTRACT'S DOCUMENTS, AND APPLICABLE CODES AND REGULATIONS.
5. THE CONTRACTOR SHALL OBTAIN AND PAY FOR ALL PERMITS, LICENSES, DOCUMENTS, AND SERVICES RELATED TO INSTALLATION OF THE WORK.
6. THE CONTRACTOR SHALL COORDINATE HIS WORK WITH OTHER TRADES IN ORDER TO PREVENT CONFLICTS DUE TO THE LOCATION OF EQUIPMENT OR THE USE OF THE SPACE.
7. PROVIDE VIBRATION ISOLATORS FOR ALL MECHANICAL EQUIPMENT TO PREVENT TRANSMISSION OF VIBRATION TO BUILDING STRUCTURE.
8. PROVIDE ACCESS PANELS IN WALLS AND CEILINGS, WHERE REQUIRED, TO SERVE FIRE DAMPERS, VALVES, SMOKE DETECTORS, AND OTHER CONCEALED MECHANICAL EQUIPMENT THAT REQUIRES ROUTINE MAINTENANCE. ACCESS PANELS SHALL BE LARGE ENOUGH TO ALLOW PROPER CLEARANCE FOR ACCESS DOORS.
9. PROVIDE DYNAMIC FIRE AND SMOKE DAMPERS IN ACCORDANCE WITH THEIR U.L. LISTING AND THE REQUIREMENTS OF NFPA-90A.
10. CUT OPENINGS, AS REQUIRED, IN THE EXISTING CONSTRUCTION FOR THE INSTALLATION OF PIPING, DUCTWORK, AND EQUIPMENT. PATCH AND REPAIR TO MATCH THE EXISTING ADJACENT CONSTRUCTION.
11. LAYOUT OF PIPING AND DUCTWORK IS DIAGRAMMATIC. LOCATE ALL NEW HORIZONTAL DUCTWORK AND PIPING AS HIGH AS POSSIBLE AND ABOVE CEILINGS UNLESS OTHERWISE INDICATED. ALLOW FOR RISES, DROPS, AND OFFSETS AS REQUIRED.
12. DUCTWORK SIZES GIVEN ON PLANS ARE INSIDE CLEAR DIMENSIONS.
13. ALL ELBOWS IN DUCTWORK SHALL BE RADIUS ELBOWS UNLESS OTHERWISE NOTED. WHERE RECTANGULAR/MITERED ELBOWS ARE SHOWN, INSTALL TURNING VANES.
14. DO NOT INSTALL EQUIPMENT, PIPING OR DUCTWORK OVER ANY ELECTRICAL EQUIPMENT OR ELECTRICAL SERVICE SPACE.
15. PROVIDE ADJUSTING HANDLES FOR DUCT MOUNTED MANUAL VOLUME DAMPERS WITH RODS OF SUFFICIENT STAND-OFF LENGTH, SUCH THAT THE HANDLE DOES NOT COMPRESS THE INSULATION, OR DAMAGE THE INSULATION WHEN ADJUSTED.
16. PROVIDE PIPE SLEEVES FOR ALL PIPING PENETRATIONS THRU WALLS AND FLOORS. EACH PIPE SHALL BE SEPARATELY SLEEVED. PROVIDE CONTINUOUS SEALANT JOINT AROUND PIPE SLEEVE, BOTH SIDES OF WALL, WATERTIGHT.
17. CONDENSATE DRAIN PIPING SHALL BE PVC. CLEANOUTS SHALL BE INSTALLED AT EACH CHANGE IN DIRECTION GREATER THAN 45 DEGREES. WHERE MORE THAN ONE CHANGE OF DIRECTION OCCURS IN A RUN OF PIPING, ONLY ONE CLEANOUT SHALL BE REQUIRED FOR EACH 40 FEET OF DEVELOPED LENGTH. COMBINATION WYE AND 1/8 BENDS SHALL BE USED IN LIEU OF TEES.
18. INSTALL MECHANICAL EQUIPMENT TO FACILITATE SERVICING, MAINTENANCE, AND REPAIR OR REPLACEMENT OF EQUIPMENT COMPONENTS. AS MUCH AS PRACTICAL, CONNECT EQUIPMENT FOR EASE OF DISCONNECTING, WITH A MINIMUM OF INTERFERENCE WITH OTHER INSTALLATIONS. PIPING SHALL NOT INTERFERE WITH FILTER PULL.
19. MECHANICAL CONTRACTOR SHALL PROVIDE AUTOMATIC CONTROL DEVICES, SUCH AS TEMPERATURE SENSORS, RELAYS, PRESSURE SWITCHES WHICH ARE ASSOCIATED WITH MECHANICAL EQUIPMENT AND ASSOCIATED CONTROL WIRING FROM STARTER TO THE CONTROL DEVICE. ELECTRICAL CONTRACTOR SHALL PROVIDE CONDUIT AND WIRING FROM POWER SOURCE TO DISCONNECT SWITCH, FROM DISCONNECT SWITCH TO STARTER, AND FROM STARTER TO THE EQUIPMENT.
20. ALL CONTROL WIRING EXCEPT IN EQUIPMENT ROOMS SHALL BE RUN CONCEALED. WIRING IN WALLS SHALL BE IN CONDUIT. ALL WIRING SHALL BE PLENUM RATED. CONTROL WIRING IN EXPOSED AREAS SHALL BE BUNDLED AND SECURED OR RUN IN CONDUIT. NO WIRING SHALL BE SURFACED MOUNTED IN FINISHED SPACES. ALL ELECTRICAL WORK SHALL BE IN ACCOORDANCE WITH NATIONAL ELECTRIC CODE.
21. INSTALL THERMOSTATS AND SPACE TEMPERATURE SENSORS 60" ABOVE FINISHED FLOOR, AND MIN. 7" HORIZONTALLY FROM ADJACENT LIGHTING DIMMER SWITCHES, UNLESS OTHERWISE NOTED. COORDINATE LOCATIONS OF ALL THERMOSTATS AND SENSORS WITH ELECTRICAL AND INTERIOR DESIGN WORK.
22. MECHANICAL EQUIPMENT WITH DDC CONTROLS AND MANUFACTURER'S INSTALLED CONTROLS SHALL BE STARTED UP BY MANUFACTURER'S REPRESENTATIVE IN COLLABORATION WITH CONTROLS CONTRACTOR. CONTROLS CONTRACTOR SHALL COORDINATE WITH MANUFACTURER'S REPRESENTATIVE TO PROVIDE COMMUNICATION BETWEEN DDC SYSTEM AND MANUFACTURER'S INSTALLED CONTROLS.
23. INITIAL SETPOINT RANGE LIMIT FOR DDC CONNECTED ROOM TEMPERATURE SENSORS SHALL BE 68°F MIN. TO 80°F MAX., ADJUSTABLE BY THE BAS OWNER.
24. ALL VALVES ARE FULL LINE SIZE EXCEPT CONTROL AND BALANCING VALVES.
25. PROVIDE PRESSURE/TEMPERATURE (P/T) PLUGS, WITH CAPS UP AND DOWNSTREAM OF ALL EQUIPMENT, AT THE SUPPLY AND RETURN TAPS OF ALL PIPING BRANCHES AND/OR WHERE INDICATED. PROVIDE EXTENDED PLUGS AND LABELS WHERE PIPING IS INSULATED. PROVIDE REMOVABLE INSULATION PLUG.
26. PROVIDE MANUAL AIR VENTS AT ALL HIGH SPOTS AND THE ENDS OF ALL PIPING LOOPS. PROVIDE 1/2" DRAIN VALVES AT LOW POINTS IN PIPING. PROVIDE MINIMUM PITCH SUFFICIENT TO INSURE ADEQUATE VENTING AND DRAINING.
27. PROVIDE FLUSHING VALVES AND TEES AT BOTH SIDES OF ALL EQUIPMENT. TAPS SHALL MATCH EQUIPMENT PIPING UP TO 1". FOR LARGER EQUIPMENT AND PIPE LOOPS PROVIDE 1 1/2" TAPS AND VALVES.
28. LOCATE AND SIZE 5 1/2" THICK CONCRETE HOUSEKEEPING PADS AND CURBS IN ACCORDANCE WITH ACTUAL EQUIPMENT PURCHASED. EXTEND HOUSEKEEPING PAD BEYOND EQUIPMENT FOR 6" IN ALL DIRECTIONS AND PROVIDE 45° CHAMFER ON TOP CORNERS OF HOUSEKEEPING PAD.

SYM	DESCRIPTION	DATE	APPR

NAVFAC

SEAL

A/E INFO

APPROVED

FOR COMMANDER NAVFAC

ACTIVITY

SATISFACTORY TO DATE

DES JMT DRW JMT CHK TLH

PM/DM M. PERRY/L. SANDERS

BRANCH MANAGER

CHIEF ENG/ARCH

FIRE PROTECTION

DEPARTMENT OF THE NAVY
NAVAL FACILITIES ENGINEERING COMMAND
HAMPTON ROADS IPT
NAVAL FACILITIES ENGINEERING COMMAND - MIDATLANTIC
NAVAL STATION - NORFOLK, VIRGINIA
NAVAL STATION NORFOLK
NORFOLK, VIRGINIA

FY 2016 P-518
MH-60 AVET TRAINING FACILITY

LEGEND, ABBREVIATIONS & GENERAL NOTES

SCALE: NONE
EPROJECT NO.: 1291639
CONSTR. CONTR. NO.
NAVFAC DRAWING NO.
12701675
SHEET 79 OF 109

M-001

DRAWFORM REVISION: 10 MARCH 2009

FILE NAME: P:\VA\NavalStationNorfolk\MILCON\2016_1291639_P-518_DRB_MH-60 AVET Training Facility\B_Design\Drawings\Sheet Files\13_Mechanical\M-001.dwg LAYOUT NAME: M-001 PLOTTED: Thursday, November 05, 2015 - 9:45am USER: john.m.taylor1
FILE NAME: P:\VA\NavalStationNorfolk\MILCON\2016_1291639_P-518_DRB_MH-60 AVET Training Facility\B_Design\Drawings\Sheet Files\13_Mechanical\M-001.dwg LAYOUT NAME: M-001 PLOTTED: Thursday, November 05, 2015 - 9:45am USER: john.m.taylor1

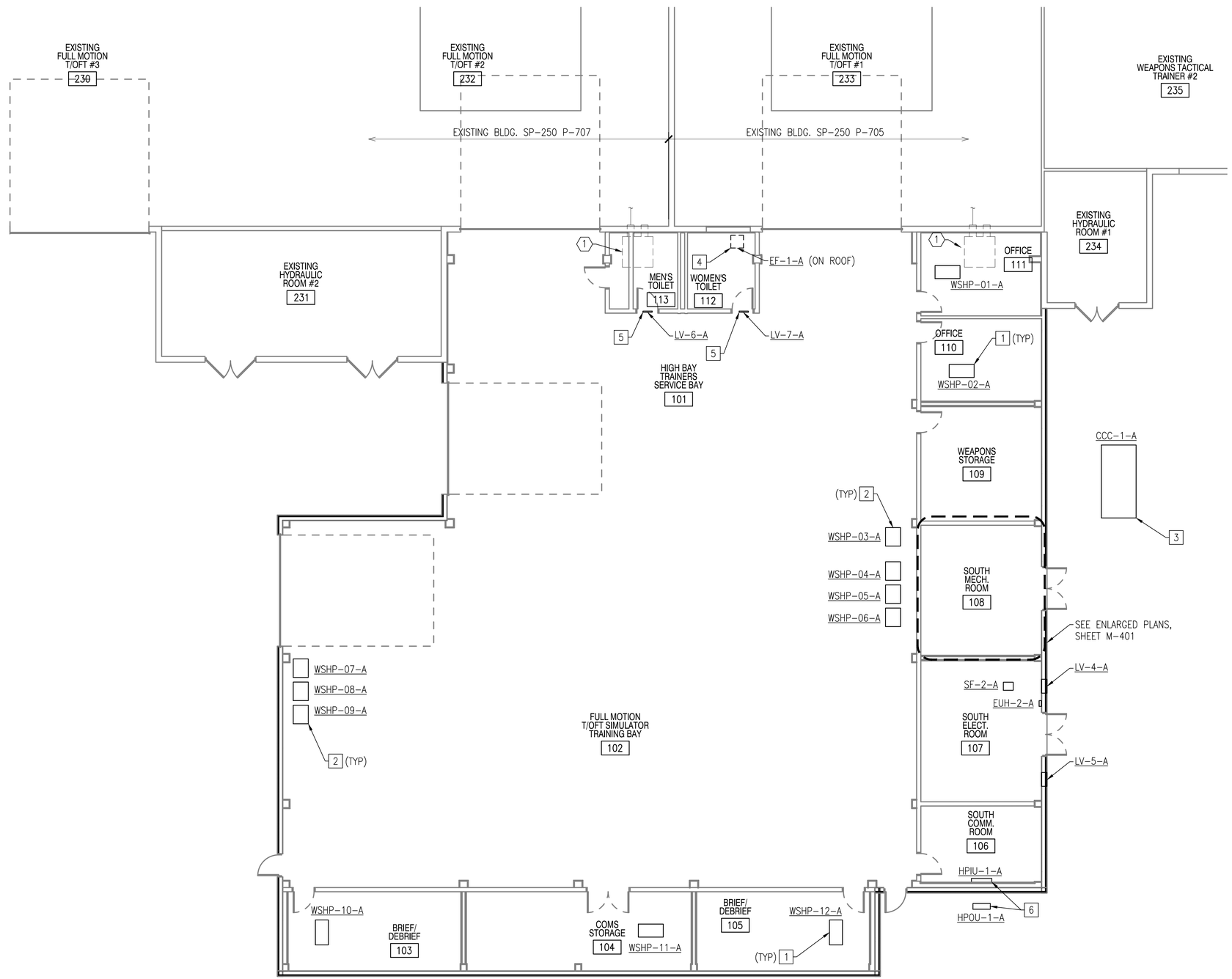

MECHANICAL FLOOR PLAN - DEMOLITION AND EQUIPMENT

SCALE: 1/8" = 1'0"

DEMOLITION KEYNOTES

1. REMOVE EXISTING PACKAGED AIR CONDITIONING UNIT SERVING EXISTING FULL MOTION TRAINERS AND ASSOCIATED HARD DUCTWORK. FLEXIBLE DUCTWORK TO REMAIN FOR REUSE WITH PORTABLE AIR CONDITIONER. REPAIR AND PATCH OPENINGS WHERE SUPPLY AND RETURN DUCTWORK PREVIOUSLY PENETRATED.

NEW WORK KEYNOTES

1. HORIZONTAL WATER SOURCE HEAT PUMP, SEE DETAIL SHEET M-501.
2. VERTICAL WATER SOURCE HEAT PUMP, SEE DETAIL SHEET M-501.
3. CLOSED CIRCUIT COOLER, SEE DETAIL SHEET M-502.
4. ROOF MOUNTED EXHAUST FAN, SEE DETAIL SHEET M-501.
5. DOOR MOUNTED LOUVER, SEE SCHEDULE SHEET M-602.
6. DUCTLESS SPLIT SYSTEM HEAT PUMP, SEE DETAIL SHEET M-501.

PLAN NORTH

GRAPHIC SCALE

1/8"=1'-0" 0' 4' 8' 16'

SYM	DESCRIPTION	DATE	APPR

NAVFAC

SEAL

A/E INFO

APPROVED

FOR COMMANDER NAVFAC

ACTIVITY

SATISFACTORY TO DATE

DES JMT DRW JMT CHK TLH

PM/DM M. PERRY/L. SANDERS

BRANCH MANAGER

CHIEF ENG/ARCH

FIRE PROTECTION

DEPARTMENT OF THE NAVY
NAVAL FACILITIES ENGINEERING COMMAND - MIDATLANTIC
NAVAL STATION - NORFOLK, VIRGINIA
NAVAL FACILITIES ENGINEERING COMMAND
HAMPTON ROADS IPT
NAVAL STATION NORFOLK
NORFOLK, VIRGINIA

FY 2016 P-518
MH-60 AVET TRAINING FACILITY

MECHANICAL FLOOR PLAN - DEMOLITION AND EQUIPMENT

SCALE: AS NOTED

EFPROJECT NO.: 1291639

CONSTR. CONTR. NO.

NAVFAC DRAWING NO. 12701676

SHEET 80 OF 109

M-101

DRAWFORM REVISION: 10 MARCH 2009

FILE NAME: P:\VA\NavalStationNorfolk\MILCON\2016_1291639_P-518_DBB_MH-60 AVET Training Facility\B_Design\Drawings\Sheet Files\13_Mechanical\M-101.dwg LAYOUT NAME: #-### PLOTTED: Thursday, November 05, 2015 - 9:46am USER: john.m.taylor1

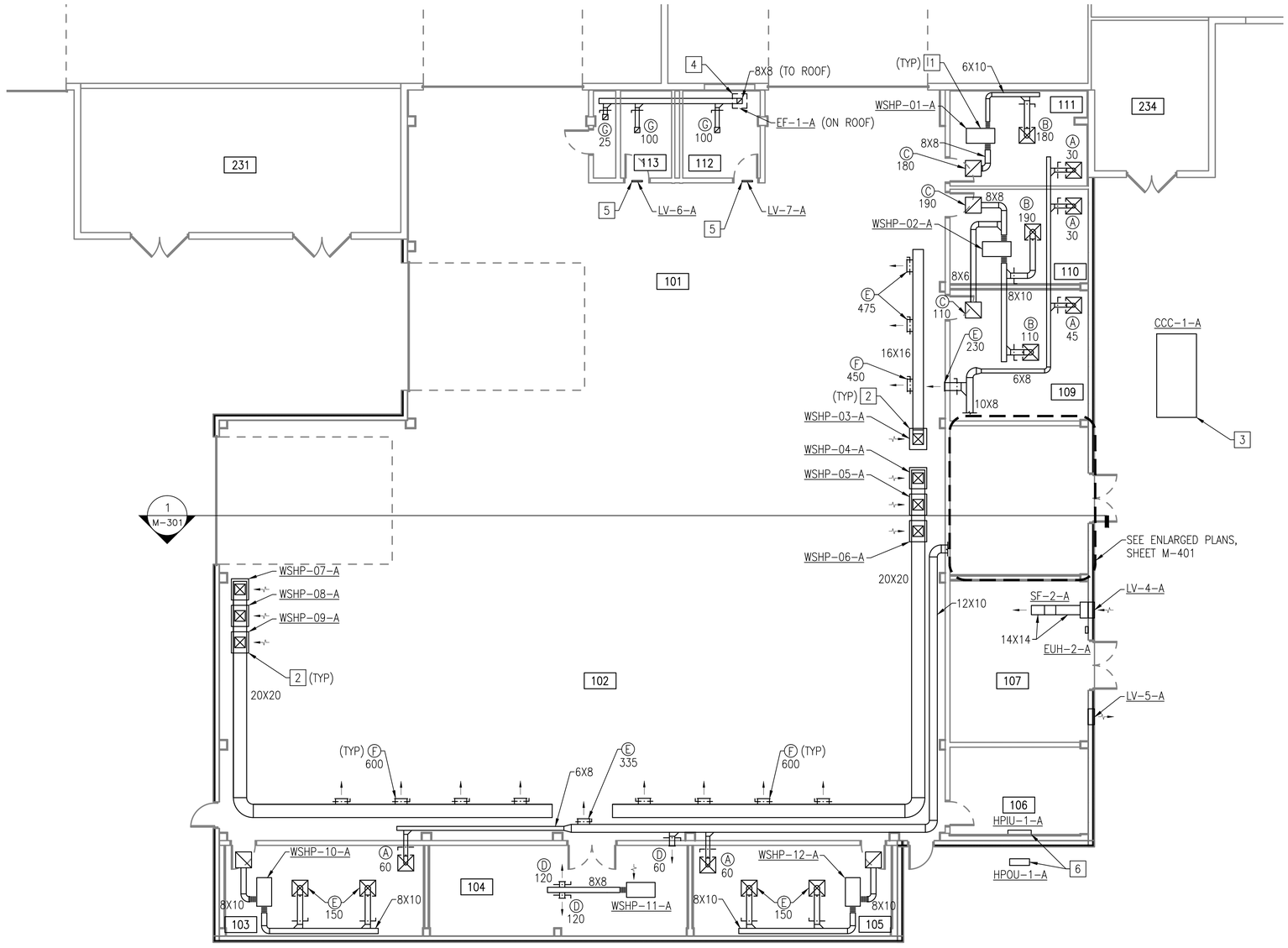

MECHANICAL FLOOR PLAN - DUCTWORK

SCALE: 1/8" = 1'0"

GENERAL SHEET NOTES

1. REFER TO SHEET M-401 FOR ENLARGED PLANS.
2. RUNOUT SIZES TO DIFFUSERS ARE INDICATED IN THE GRILLES, REGISTERS AND DIFFUSERS SCHEDULE ON SHEET M-602.

NEW WORK KEYNOTES

1. HORIZONTAL WATER SOURCE HEAT PUMP, SEE DETAIL SHEET M-501.
2. VERTICAL WATER SOURCE HEAT PUMP, SEE DETAIL SHEET M-501.
3. CLOSED CIRCUIT COOLER, SEE DETAIL SHEET M-502.
4. ROOF MOUNTED EXHAUST FAN, SEE DETAIL SHEET M-501.
5. DOOR MOUNTED LOUVER, SEE SCHEDULE SHEET M-602.
6. DUCTLESS SPLIT SYSTEM HEAT PUMP, SEE DETAIL SHEET M-501.

PLAN NORTH

GRAPHIC SCALE

1/8"=1'-0" 0' 4' 8' 16'

SYM	DESCRIPTION	DATE	APPR

NAVFAC

SEAL

A/E INFO

APPROVED

FOR COMMANDER NAVFAC

ACTIVITY

SATISFACTORY TO DATE

DES JMT DRW JMT CHK TLH

PM/DM M. PERRY/L. SANDERS

BRANCH MANAGER

CHIEF ENG/ARCH

FIRE PROTECTION

DEPARTMENT OF THE NAVY
NAVAL FACILITIES ENGINEERING COMMAND
HAMPTON ROADS IPT
NAVAL FACILITIES ENGINEERING COMMAND - MIDATLANTIC
NAVAL STATION - NORFOLK, VIRGINIA
NAVAL STATION NORFOLK
NORFOLK, VIRGINIA

FY 2016 P-518
MH-60 AVET TRAINING FACILITY

MECHANICAL FLOOR PLAN - DUCTWORK

SCALE: AS NOTED

EPROJECT NO.: 1291639

CONSTR. CONTR. NO.

NAVFAC DRAWING NO.
12701677

SHEET 81 OF 109

MH101

DRAWFORM REVISION: 10 MARCH 2009

FILE NAME: P:\VA\NavalStationNorfolk\MILCON\2016_1291639_P-518_DRB_MH-60 AVET Training Facility\B_Design\Drawings\Sheet Files\13_Mechanical\MH101.dwg LAYOUT NAME: #-### PLOTTED: Thursday, November 05, 2015 - 9:47am USER: john.m.taylor1

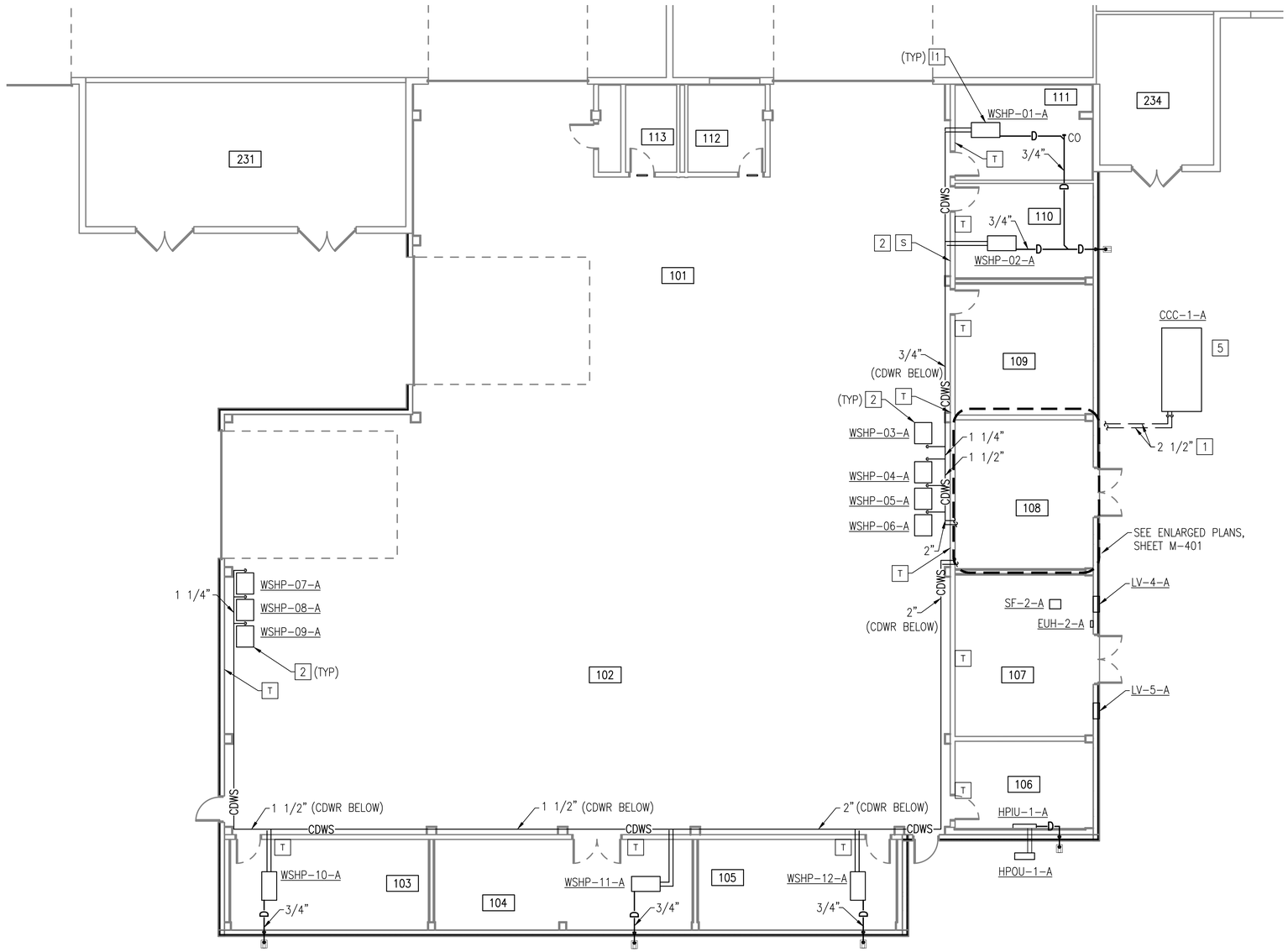

MECHANICAL FLOOR PLAN - PIPING

SCALE: 1/8" = 1'0"

GENERAL SHEET NOTES

1. PIPING RUNOUT SIZES TO WSHPs ARE INDICATED IN THE WSHP SCHEDULE, SHEET M-601.
2. ROUTE CONDENSATE PIPING TO NEAREST FLOOR DRAIN UNLESS OTHERWISE INDICATED.
3. IN HIGH BAY AREAS, RUN CONDENSER WATER SUPPLY AND RETURN PIPING TIGHT TO WALL.

NEW WORK KEYNOTES

1. 2 1/2" PREINSULATED UNDERGROUND CONDENSER WATER SUPPLY AND RETURN PIPING TO MECHANICAL ROOM.
2. HVAC EMERGENCY SHUTDOWN SWITCH.
3. HORIZONTAL WATER SOURCE HEAT PUMP, SEE DETAIL SHEET M-501.
4. VERTICAL WATER SOURCE HEAT PUMP, SEE DETAIL SHEET M-501.
5. CLOSED CIRCUIT COOLER, SEE DETAIL SHEET M-502.

PLAN NORTH

GRAPHIC SCALE

1/8"=1'-0" 0' 4' 8' 16'

SYM	DESCRIPTION	DATE	APPR

NAVFAC

SEAL

A/E INFO

APPROVED

FOR COMMANDER NAVFAC

ACTIVITY

SATISFACTORY TO DATE

DES JMT DRW JMT CHK TLH

PM/DM M. PERRY/L. SANDERS

BRANCH MANAGER

CHIEF ENG/ARCH

FIRE PROTECTION

DEPARTMENT OF THE NAVY
NAVAL FACILITIES ENGINEERING COMMAND
HAMPTON ROADS IPT
NAVAL FACILITIES ENGINEERING COMMAND - MIDATLANTIC
NAVAL STATION - NORFOLK, VIRGINIA
NAVAL STATION NORFOLK
NORFOLK, VIRGINIA

FY 2016 P-518
MH-60 AVET TRAINING FACILITY

MECHANICAL FLOOR PLAN – PIPING

SCALE: AS NOTED
EPROJECT NO.: 1291639
CONSTR. CONTR. NO.
NAVFAC DRAWING NO. 12701678
SHEET 82 OF 109

MP101

DRAWFORM REVISION: 10 MARCH 2009

FILE NAME: P:\VA\NavalStationNorfolk\MLCON\2016_1291639_P-518_DBB_MH-60 AVET Training Facility\B_Design\Drawings\Sheet Files\13_Mechanical\MP101.dwg LAYOUT NAME: #-### PLOTTED: Thursday, November 05, 2015 - 9:47am USER: john.m.taylor1

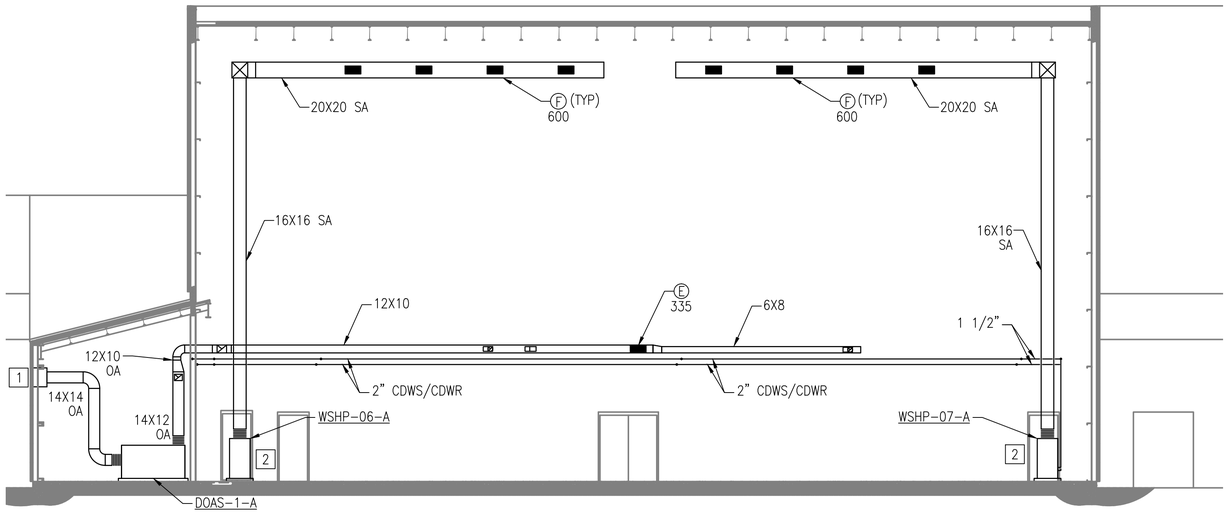

FULL MOTION T/OFT SIMULATOR TRAINING BAY 102 AND MECHANICAL ROOM 108 - SECTION

SCALE: 1/8" = 1'0"

PLAN NORTH

GENERAL SHEET NOTES

1. SEE SHEET M-501 AND M-502 FOR DETAIL DRAWINGS.

NEW WORK KEYNOTES

1. OUTDOOR AIR INTAKE LOUVER, SEE DETAIL SHEET M-502. MOUNT BOTTOM OF LOUVER MINIMUM 10' ABOVE FINISHED GRADE.
2. VERTICAL WATER SOURCE HEAT PUMP, SEE DETAIL SHEET M-501.

PLAN NORTH

GRAPHIC SCALE

1/8"=1'-0" 0' 4' 8' 16'

SYM	DESCRIPTION	DATE	APPR

NAVFAC

SEAL

A/E INFO

APPROVED

FOR COMMANDER NAVFAC

ACTIVITY

SATISFACTORY TO DATE

DES JMT DRW JMT CHK TLH

PM/DM M. PERRY/L. SANDERS

BRANCH MANAGER

CHIEF ENG/ARCH

FIRE PROTECTION

DEPARTMENT OF THE NAVY
NAVAL FACILITIES ENGINEERING COMMAND
HAMPTON ROADS IPT

NAVAL FACILITIES ENGINEERING COMMAND - MIDATLANTIC
NAVAL STATION - NORFOLK, VIRGINIA

NAVAL STATION NORFOLK
NORFOLK, VIRGINIA

FY 2016 P-518
MH-60 AVET TRAINING FACILITY

SECTIONS

SCALE: AS NOTED

EPROJECT NO.: 1291639

CONSTR. CONTR. NO.

NAVFAC DRAWING NO.
12701679

SHEET 83 OF 109

M-301

DRAWFORM REVISION: 10 MARCH 2009

FILE NAME: P:\VA\NorfolkNavalStation\MILCON\2016_1291639_P-518_DRB_MH-60 AVET Training Facility\B_Design\Drawings\Sheet Files\13_Mechanical\M-301.dwg LAYOUT NAME: #-### PLOTTED: Thursday, November 05, 2015 - 9:48am USER: john.m.taylor1

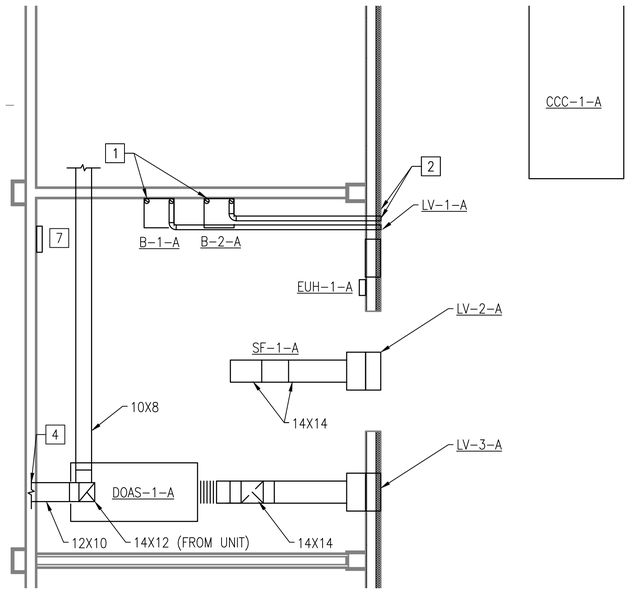

MECHANICAL ROOM 108 ENLARGED PLAN - DUCTWORK

SCALE: 1/4" = 1'0"

PLAN NORTH

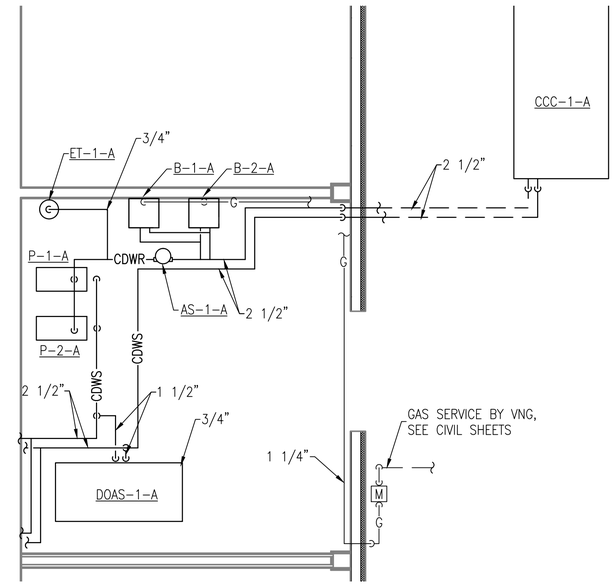

MECHANICAL ROOM 108 ENLARGED PLAN - PIPING

SCALE: 1/4" = 1'0"

PLAN NORTH

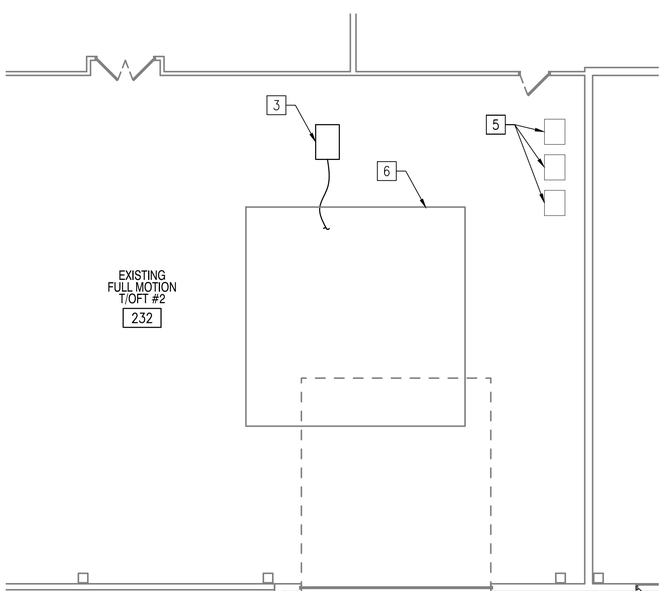

EXISTING FULL MOTION T/OFT ROOM 232 - EQUIPMENT

SCALE: 1/8" = 1'0"

PLAN NORTH

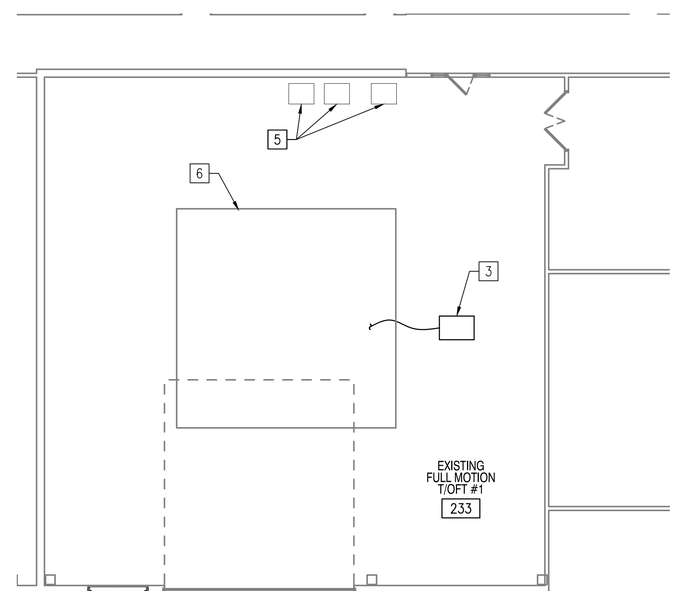

EXISTING FULL MOTION T/OFT ROOM 233 - EQUIPMENT

SCALE: 1/8" = 1'0"

PLAN NORTH

GENERAL SHEET NOTES

1. SEE SHEET M-501 AND M-502 FOR DETAIL DRAWINGS.

NEW WORK KEYNOTES

1. 3" BOILER VENT PIPING THROUGH ROOF ABOVE.
2. 3" BOILER INTAKE PIPING THROUGH WALL.
3. SELF-CONTAINED PORTABLE AIR CONDITIONING UNIT. SELF-CONTAINED PORTABLE AIR CONDITIONING UNIT SHALL SERVE EXISTING TRAINER CABIN. UNIT IS PROVIDED AS PART OF FF&E PACKAGE. MODIFY EXISTING FLEXIBLE DUCTWORK AS NECESSARY. ROUTE CONDENSATE TO NEW FLOOR DRAIN SHOWN ON SHEET P-102.
4. PROVIDE HARDENED DUCT SECURITY BARS AT WALL PENETRATION.
5. EXISTING WATER SOURCE HEAT PUMP SERVING HIGH BAY AREA.
6. EXISTING TRAINER FOOTPRINT.
7. DDC PANEL.

PLAN NORTH

GRAPHIC SCALE

1/8"=1'-0" 0' 4' 8' 16'

SYM	DESCRIPTION	DATE	APPR

NAVFAC

SEAL

A/E INFO

APPROVED

FOR COMMANDER NAVFAC

ACTIVITY

SATISFACTORY TO DATE

DES JMT DRW JMT CHK TLH

PM/DM M. PERRY/L. SANDERS

BRANCH MANAGER

CHIEF ENG/ARCH

FIRE PROTECTION

DEPARTMENT OF THE NAVY
NAVAL FACILITIES ENGINEERING COMMAND
HAMPTON ROADS IPT.

NAVAL FACILITIES ENGINEERING COMMAND
NAVAL FACILITIES ENGINEERING COMMAND - MIDATLANTIC
NAVAL STATION - NORFOLK, VIRGINIA

NAVAL STATION NORFOLK
NORFOLK, VIRGINIA

FY 2016 P-518
MH-60 AVET TRAINING FACILITY

ENLARGED PLANS

SCALE: AS NOTED

EPROJECT NO.: 1291639

CONSTR. CONTR. NO.

NAVFAC DRAWING NO.
12701680

SHEET 84 OF 109

M-401

DRAWFORM REVISION: 10 MARCH 2009

FILE NAME: P:\VA\NorvolStationNorfolk\WLCON\2016_1291639_P-518_DRB_MH-60 AVET Training Facility\B_Design\Drawings\Sheet Files\13_Mechanical\M-401.dwg LAYOUT NAME: #-### PLOTTED: Thursday, November 05, 2015 - 10:01am USER: john.m.taylor1

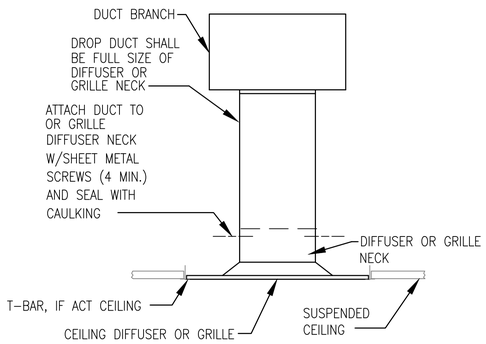

DUCT TO DIFFUSER/GRILLE CONNECTION DETAIL (C1)

NOT TO SCALE — MH101

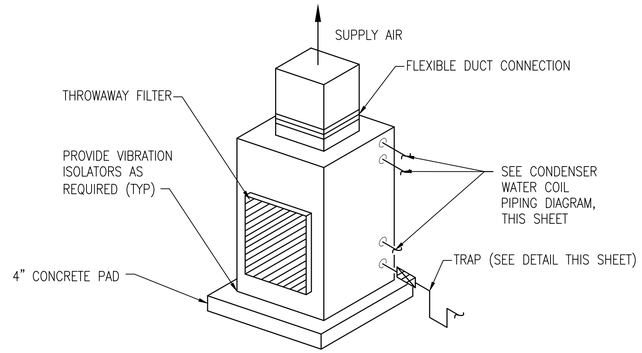

VERTICAL WATER SOURCE HEAT PUMP DETAIL (C2)

NO SCALE — M-101, MH101, MP101

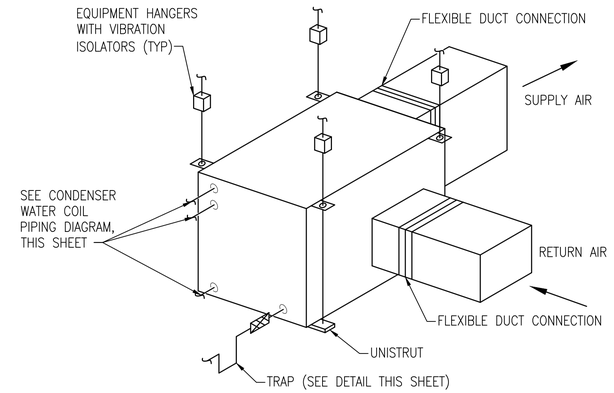

NOTE: INTERNAL FILTER SHALL BE REMOVED. FILTER GRILLE SHALL BE USED IN LIEU OF INTERNAL FILTER.

HORIZONTAL WATER SOURCE HEAT PUMP DETAIL (C4)

NO SCALE — M-101, MH101, MP101

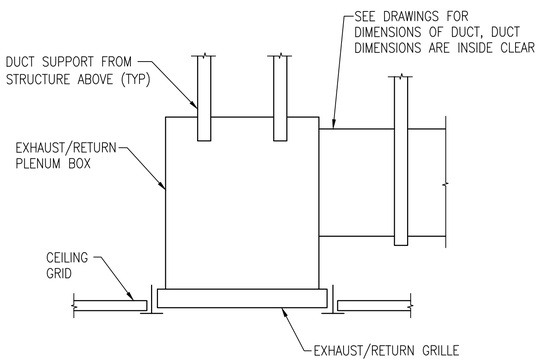

EXHAUST/RETURN GRILLE DETAIL (B1)

NO SCALE — MH101

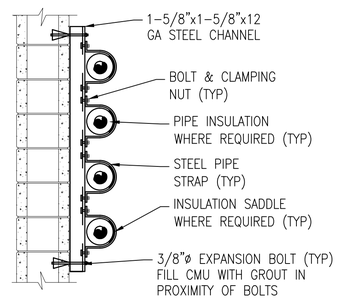

SIDEWALL PIPE SUPPORT (B2)

NO SCALE — MP101, M-401

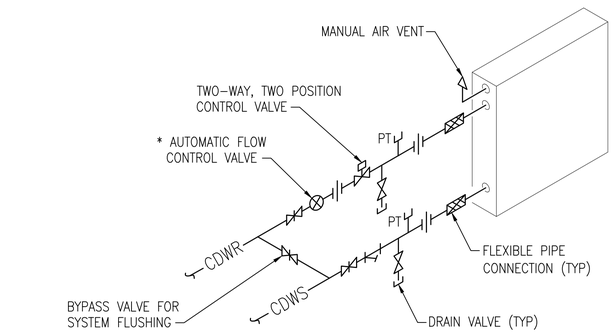

* THE AUTOMATIC FLOW CONTROL VALVE SHALL BE INSTALLED BY THE CONTRACTOR IN CONFORMANCE WITH VALVE MANUFACTURER'S RECOMMENDED SPACING UP/DOWN STREAM FROM PIPE CHANGES IN DIRECTION AND/OR OTHER VALVES/COMPONENTS IN THE PIPING.

CONDENSER WATER COIL PIPING DETAIL (B4)

NO SCALE — M-101, MP101, M-401

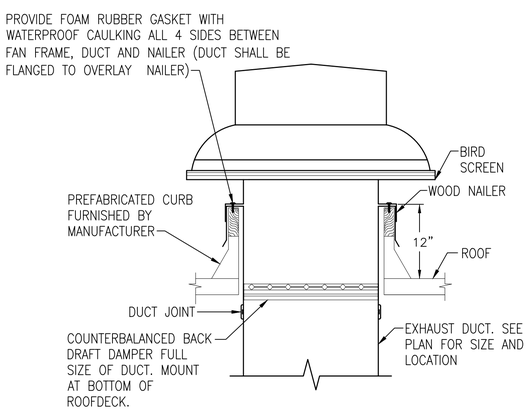

ROOFTOP EXHAUST FAN DETAIL (A1)

NO SCALE — M-101, MH101

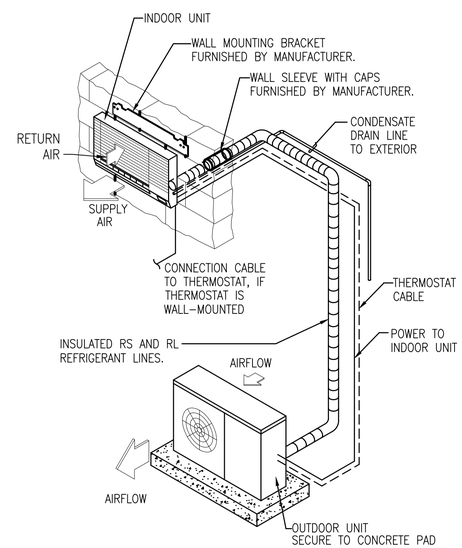

DUCTLESS AIR CONDITIONER UNIT DETAIL (A2)

NO SCALE — M-101, MH101, MP101

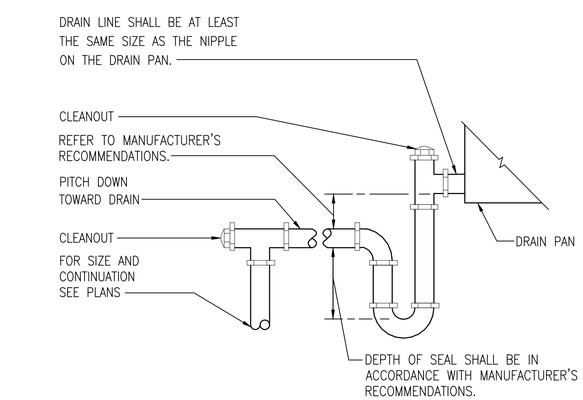

CONDENSATE P-TRAP DETAIL (A4)

NO SCALE — M-101, MP101

SYM	DESCRIPTION	DATE	APPR

NAVFAC

SEAL

A/E INFO

APPROVED

FOR COMMANDER NAVFAC

ACTIVITY

SATISFACTORY TO DATE

DES JMT DRW JMT CHK TLH

PM/DM M. PERRY/L. SANDERS

BRANCH MANAGER

CHIEF ENG/ARCH

FIRE PROTECTION

DEPARTMENT OF THE NAVY
NAVAL FACILITIES ENGINEERING COMMAND
NAVAL FACILITIES ENGINEERING COMMAND - MIDATLANTIC
HAMPTON ROADS IPT — NAVAL STATION - NORFOLK, VIRGINIA
NAVAL STATION NORFOLK — NORFOLK, VIRGINIA

FY 2016 P-518
MH-60 AVET TRAINING FACILITY

DETAILS

SCALE: AS NOTED

EPROJECT NO.: 1291639

CONSTR. CONTR. NO.

NAVFAC DRAWING NO. 12701681

SHEET 85 OF 109

M-501

DRAWFORM REVISION: 10 MARCH 2009

FILE NAME: P:\VA\NavalStationNorfolk\MLCON\2016_1291639_P-518_DBB_MH-60 AVET Training Facility\B_Design\Drawings\Sheet Files\13_Mechanical\M-501.dwg LAYOUT NAME: F-### PLOTTED: Thursday, November 05, 2015 - 9:49am USER: john.m.taylor1

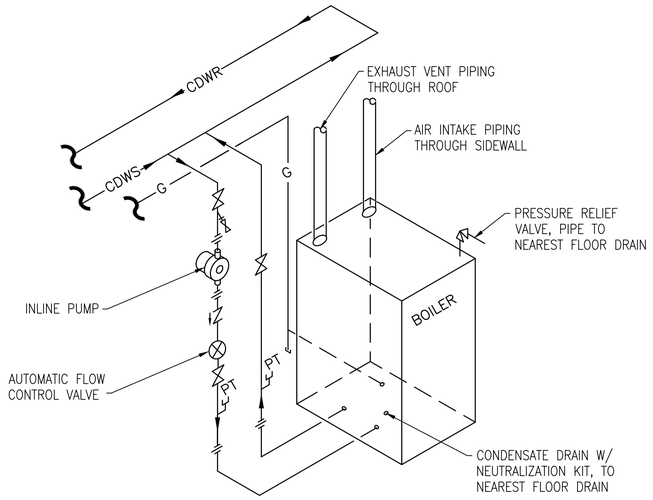

NOTE: THE AUTOMATIC FLOW CONTROL VALVE SHALL BE INSTALLED BY THE CONTRACTOR IN CONFORMANCE WITH VALVE MANUFACTURER'S COMMENDED SPACING UP/DOWN STREAM FROM PIPE CHANGES IN DIRECTION AND/OR OTHER VALVES/COMPONENTS IN THE PIPING.

GAS-FIRED CONDENSING BOILER DETAIL (C1)

NOT TO SCALE — M-401

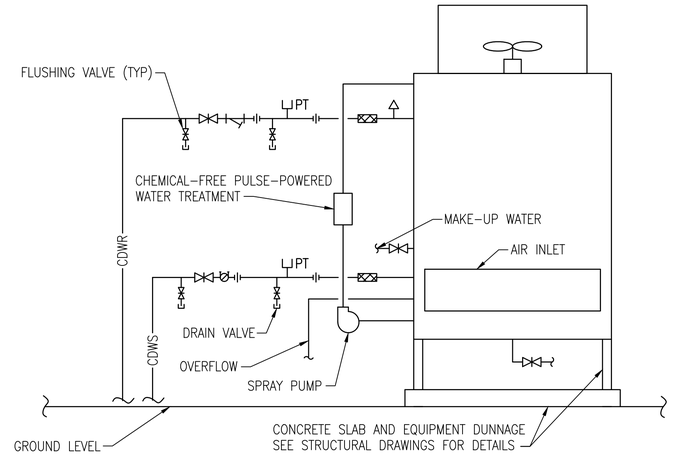

NOTE: SEE STRUCTURAL SHEET SB501 FOR SCREEN WALL DETAILS. MINIMUM 3' CLEARANCE ABOVE AND ON ALL SIDES.
NOTE: THE CALIBRATED BALANCING VALVE SHALL BE INSTALLED BY THE CONTRACTOR IN CONFORMANCE WITH VALVE MANUFACTURER'S COMMENDED SPACING UP/DOWN STREAM FROM PIPE CHANGES IN DIRECTION AND/OR OTHER VALVES/COMPONENTS IN THE PIPING.

CLOSED CIRCUIT COOLING TOWER DETAIL (C2)

NOT TO SCALE — M-101, M-401

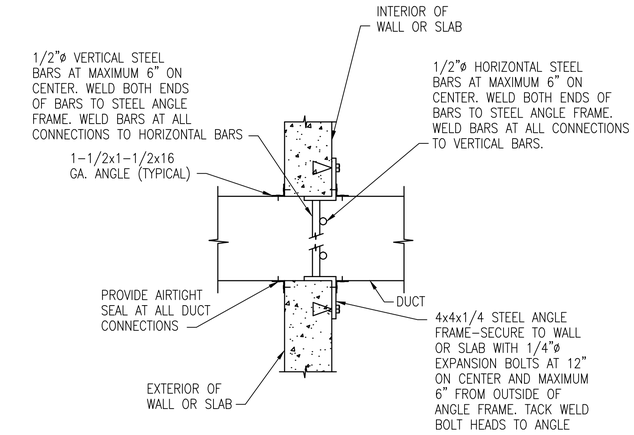

DUCT SECURITY PENETRATION DETAIL (C4)

NOT TO SCALE — M-401

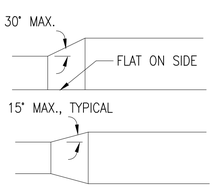

DUCT TRANSITIONS DETAIL (B1)

NO SCALE — MH101, M-401

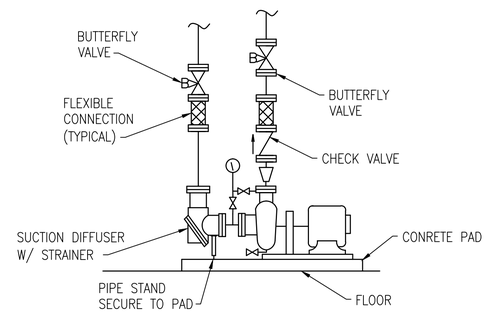

BASE MOUNTED CENTRIFUGAL PUMP DETAIL (B2)

NOT TO SCALE — M-401

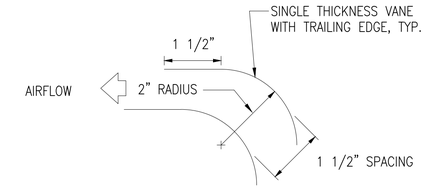

NOTE: PROVIDE TURNING VANES ACROSS THE FULL WIDTH OF THE MITERED ELBOWS.

DUCT MITERED ELBOW - TURNING VANES DETAIL (B4)

NO SCALE — MH101, M-401

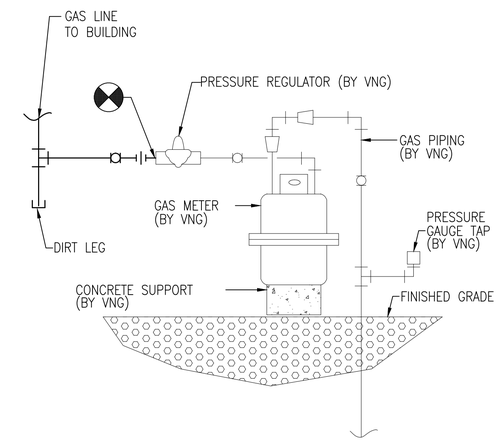

GAS SERVICE DETAIL (B4)

NOT TO SCALE — M-401

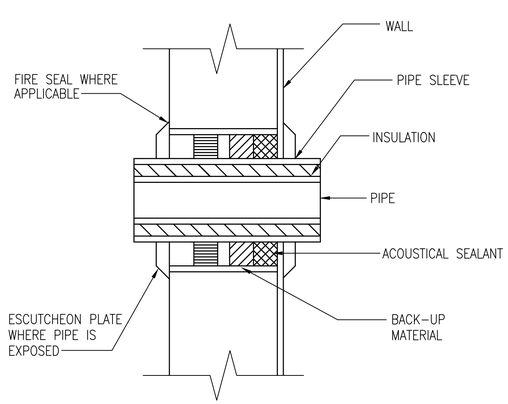

WALL PIPE SLEEVE DETAIL (A1)

NOT TO SCALE — MP101, M-401

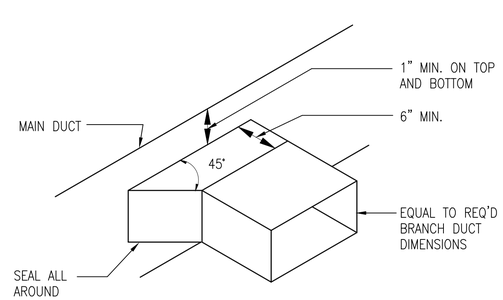

LOW-PRESSURE DUCT BRANCH TAKE-OFF FITTING DETAIL (A2)

NO SCALE — MH101, M-401

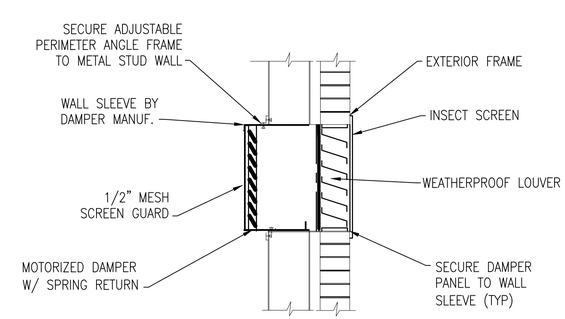

WALL MOUNTED DAMPER DETAIL (A4)

NOT TO SCALE — M-101, MH101, M-401

SYM	DESCRIPTION	DATE	APPR

NAVFAC

SEAL

A/E INFO

APPROVED

FOR COMMANDER NAVFAC

ACTIVITY

SATISFACTORY TO DATE

DES JMT DRW JMT CHK TLH

PM/DM M. PERRY/L. SANDERS

BRANCH MANAGER

CHIEF ENG/ARCH

FIRE PROTECTION

DEPARTMENT OF THE NAVY
NAVAL FACILITIES ENGINEERING COMMAND
HAMPTON ROADS IPT
NAVAL FACILITIES ENGINEERING COMMAND - MIDATLANTIC
NAVAL STATION - NORFOLK, VIRGINIA
NAVAL STATION NORFOLK
NORFOLK, VIRGINIA

FY 2016 P-518
MH-60 AVET TRAINING FACILITY

DETAILS

SCALE: AS NOTED
EPROJECT NO.: 1291639
CONSTR. CONTR. NO.
NAVFAC DRAWING NO. 12701682
SHEET 86 OF 109

M-502

DRAWFORM REVISION: 10 MARCH 2009

FILE NAME: P:\VA\NavalStationNorfolk\MILCON\2016_1291639_P-518_DBB_MH-60 AVET Training Facility\B_Design\Drawings\Sheet Files\13_Mechanical\M-502.dwg LAYOUT NAME: F-### PLOTTED: Thursday, November 05, 2015 - 9:49am USER: john.m.taylor1

WATER SOURCE HEAT PUMP SCHEDULE

MARK	LOCATION	TYPE	SUPPLY FAN DATA		COOLING CAPACITY				HEATING CAPACITY		WATER DATA			ELECTRICAL DATA		
			AIRFLOW (CFM)	ESP (IN W.G.)	TOTAL COOLING (MBH)	SENSIBLE COOLING (MBH)	ENTERING AIR (°F) DB	ENTERING AIR (°F) WB	TOTAL HEATING (MBH)	ENTERING AIR (°F) DB	FLOW (GPM)	MAX PD (FT)	RUNOUT SIZE (IN)	VOLTAGE	PHASE	MCA
WSHP-01-A	111	HORIZONTAL CONCEALED	180	0.5	3.4	3.1	75	62.5	0.5	68	1.5	2.5	3/4	208	1	4.3
WSHP-02-A	110	HORIZONTAL CONCEALED	300	0.5	6.6	6.0	75	62.5	3.2	68	2.0	2.5	3/4	208	1	5.3
WSHP-03-A	101	VERTICAL UPFLOW	1400	0.5	40.1	38.0	72	60	18.8	72	8.0	3.7	1 1/4	460	3	8.3
WSHP-04-A	102	VERTICAL UPFLOW	1200	0.5	30.3	29.7	72	60	9.5	72	7.0	3.8	1	460	3	6.9
WSHP-05-A	102	VERTICAL UPFLOW	1200	0.5	30.3	29.7	72	60	9.5	72	7.0	3.8	1	460	3	6.9
WSHP-06-A	102	VERTICAL UPFLOW	1200	0.5	30.3	29.7	72	60	9.5	72	7.0	3.8	1	460	3	6.9
WSHP-07-A	102	VERTICAL UPFLOW	1200	0.5	30.3	29.7	72	60	9.5	72	7.0	3.8	1	460	3	6.9
WSHP-08-A	102	VERTICAL UPFLOW	1200	0.5	30.3	29.7	72	60	9.5	72	7.0	3.8	1	460	3	6.9
WSHP-09-A	102	VERTICAL UPFLOW	1200	0.5	30.3	29.7	72	60	9.5	72	7.0	3.8	1	460	3	6.9
WSHP-10-A	103	HORIZONTAL CONCEALED	300	0.5	7.1	5.9	75	62.5	2.4	68	2.0	2.5	3/4	208	1	5.3
WSHP-11-A	104	VERTICAL UPFLOW	240	0.5	3.5	3.2	75	62.5	3.9	68	1.5	2.5	3/4	208	1	4.3
WSHP-12-A	105	HORIZONTAL CONCEALED	300	0.5	7.1	5.9	75	62.5	2.4	68	2.0	2.5	3/4	208	1	5.3

NOTES:
1. PROVIDE WITH SINGLE POINT POWER CONNECTION.
2. ENTERING CONDENSER WATER TEMPERATURE: COOLING MODE = 85°F; HEATING MODE = 50°F
3. PROVIDE WITH INTEGRAL DISCONNECT SWITCH
4. MINIMUM 15 EER AND 4.5 COP BASED ON ASHRAE/AHRI/ISO 13256-1.
5. MAXIMUM CONTROL VALVE PRESSURE DROP OF 5 FT.

DX SPLIT SYSTEM AIR COOLED HEAT PUMP SCHEDULE

MARK	LOCATION	TYPE	AIRFLOW (CFM)	COOLING CAPACITY					HEATING CAPACITY			SPLIT SYSTEM OUTDOOR UNIT			ELECTRICAL DATA		
				TOTAL COOLING (MBH)	SENSIBLE COOLING (MBH)	ENTERING AIR (°F) DB	ENTERING AIR (°F) WB	MIN SEER	TOTAL HEATING (MBH)	ENTERING AIR (°F) DB	MIN HPSF	MARK	LOCATION	CAPACITY	VOLTAGE	PHASE	MCA
HPIU-1-A	106	WALL MOUNT	330	12	9.9	78	65	13	12	68	7.8	HPOU-1-A	PLAN SOUTH ELEVATION	MATCH INDOOR UNIT	120	1	14.3

NOTES:
1. PROVIDE WITH WIRED CONTROLLER.
2. MOUNT INDOOR UNIT 8' ABOVE FINISHED FLOOR.
3. PROVIDE WITH COMBINATION MOTOR STARTER/DISCONNECT. INDOOR UNIT IS POWERED FROM OUTDOOR UNIT.

FAN SCHEDULE

MARK	LOCATION	TYPE	AIRFLOW (CFM)	ESP (IN WG)	RPM	SONES	DRIVE	ELECTRICAL DATA			NOTES
								HP	VOLTAGE	PHASE	
EF-1-A	112	ROOF MOUNTED CENTRIFUGAL	225	0.4	1075	5.3	DIRECT	1/6	120	1	1,2,3
SF-1-A	108	INLINE CENTRIFUGAL	1020	0.3	1725	15.2	BELT	1/3	208	1	2
SF-2-A	107	INLINE CENTRIFUGAL	1080	0.3	1725	16.6	BELT	1/3	208	1	2

NOTES:
1. PROVIDE WITH FAN SPEED CONTROLLER.
2. PROVIDE WITH COMBINATION MOTOR STARTER/DISCONNECT.
3. PROVIDE WITH MANUFACTURER'S ROOF CURB.

ELECTRIC UNIT HEATER SCHEDULE

MARK	LOCATION	TYPE	AIRFLOW (CFM)	ELECTRICAL DATA		
				VOLTAGE	PHASE	kW
EUH-1-A	108	WALL MOUNT FAN FORCED	100	208	1	0.75
EUH-2-A	107	WALL MOUNT FAN FORCED	100	208	1	0.75

NOTES:
1. PROVIDE WITH INTEGRAL DISCONNECT.
2. PROVIDE WITH TAMPERPROOF THERMOSTAT.
3. PROVIDE WITH SURFACE MOUNTING KIT.

WATER SOURCE HEAT PUMP DEDICATED OUTDOOR AIR SYSTEM SCHEDULE

MARK	LOCATION	SUPPLY FAN CAPACITY			COOLING CAPACITY					HEAT PUMP HEATING CAPACITY		CONDENSER WATER DATA		ELECTRICAL DATA		
		OUTSIDE AIR (CFM)	ESP (IN WG)	MAX MOTOR (HP)	TOTAL COOLING (MBH)	SENSIBLE COOLING (MBH)	LEAVING AIR (°F) DB	LEAVING AIR (°F) WB	MIN EER	ENTERING AIR (°F)	LEAVING AIR (°F)	FLOW (GPM)	MAX PD (FT WG)	VOLTAGE	PHASE	MCA
DOAS-1-A	108	850	1	0.5	80.1	32.5	49.5	49.5	14	22	70	19	9.2	460	3	15

NOTES:
1. PROVIDE WITH SINGLE POINT POWER CONNECTION AND INTEGRAL DISCONNECT.
2. ENTERING CONDENSER WATER TEMPERATURE: COOLING MODE = 85°F; HEATING MODE = 50°F
3. PROVIDE WITH MODULATING HOT GAS REHEAT COIL WITH 70°F LEAVING SUPPLY AIR TEMPERATURE.
4. PROVIDE WITH MERV 13 FILTER ON OUTSIDE AIR.
5. MAXIMUM CONTROL VALVE PRESSURE DROP OF 5 FT.

SYM	DESCRIPTION	DATE	APPR

NAVFAC

SEAL

A/E INFO

APPROVED

FOR COMMANDER NAVFAC

ACTIVITY

SATISFACTORY TO DATE

DES JMT DRW JMT CHK TLH

PM/DM M. PERRY/L. SANDERS

BRANCH MANAGER

CHIEF ENG/ARCH

FIRE PROTECTION

DEPARTMENT OF THE NAVY
NAVAL FACILITIES ENGINEERING COMMAND
HAMPTON ROADS IPT

NAVAL FACILITIES ENGINEERING COMMAND - MIDATLANTIC
NAVAL STATION - NORFOLK, VIRGINIA

NAVAL STATION NORFOLK

NORFOLK, VIRGINIA

FY 2016 P-518
MH-60 AVET TRAINING FACILITY

SCHEDULES

SCALE: AS NOTED

EPROJECT NO.: 1291639

CONSTR. CONTR. NO.

NAVFAC DRAWING NO. 12701683

SHEET 87 OF 109

M-601

DRAWFORM REVISION: 10 MARCH 2009

FILE NAME: P:\VA\NavalStationNorfolk\WLCON\2016_1291639_P-518_DBB_MH-60 AVET Training Facility\B_Design\Drawings\Sheet Files\13_Mechanical\M-601.dwg LAYOUT NAME: #-### PLOTTED: Thursday, November 05, 2015 - 9:50am USER: john.m.taylor1

PUMP SCHEDULE

MARK	LOCATION	TYPE	GPM	FT HD	MAX RPM	ELECTRICAL DATA		
						HP	VOLTAGE	PHASE
P-1-A	108	CENTRIFUGAL BASE MOUNTED	64	50	1760	2	460	3
P-2-A	108	CENTRIFUGAL BASE MOUNTED	64	50	1760	2	460	3

NOTES: 1. PROVIDE WITH SUCTION DIFFUSER WITH STRAINER AND VARIABLE FREQUENCY DRIVE.
2. PROVIDE WITH PREMIUM EFFICIENCY MOTOR.

AIR CONTROL SCHEDULE

SERVICE	LOCATION	AIR SEPARATOR				EXPANSION TANK			
		MARK	GPM	MAX PD (FT HD)	SIZE (IN)	MARK	TANK VOL. (GAL)	ACCEPT. VOL. (GAL)	TYPE
CONDENSER WATER	108	AS-1-A	64	2	2 1/2	ET-1-A	4.4	2.5	DIAPHRAGM

NOTES: 1. AIR SEPARATOR: PROVIDE WITH INTEGRAL STRAINER.
2. EXPANSION TANK: FIELD VERIFY PRE-CHARGE REQUIREMENTS WITH MANUFACTURER'S RECOMMENDATIONS.

GAS FIRED HOT WATER BOILER SCHEDULE

MARK	LOCATION	MIN. EFFICIENCY (% AFUE)	GROSS INPUT (MBH)	MIN NET OUTPUT (MBH)	WATER TEMP		WATER FLOW (GPM)	MAX PD (FT WG)	ELECTRICAL DATA		
					ENT. (°F)	LVG. (°F)			VOLTAGE	PHASE	FLA
B-1-A	108	95	110	102	50	85	6	1	120	1	0.5
B-2-A	108	95	110	102	50	85	6	1	120	1	0.5

NOTES: 1. PROVIDE WITH DISCONNECT.
2. PROVIDE WITH CONDENSATION NEUTRALIZATION KIT.
3. PROVIDE WITH BOILER CIRCULATION PUMP.
4. PROVIDE WITH NATURAL GAS BURNER (MAX GAS INLET PRESSURE 14" W.C.) WITH 5:1 TURNDOWN RATIO.

DUCT CONSTRUCTION AND LEAK TEST SCHEDULE

MARK	DUCT PRESSURE CLASS (IN. WG)				SUPPLY RECTANGULAR		RETURN/EXHAUST/ OUTSIDE AIR		DUCT TEST PRESSURE (IN. WG)
	SUPPLY DUCT	RETURN DUCT	EXHAUST DUCT	OA DUCT	SEAL CLASS	LEAK CLASS	SEAL CLASS	LEAK CLASS	
DOAS-1-A	2	-	-	-	A	12	-	-	2
	-	-	-	1	-	-	-	-	1
ALL WSHPs	1	-	-	-	A	24	-	-	1
	-	-0.5	-	-	-	-	A	24	0.5
ALL EFs, SFs	1	-	-1	-	A	24	A	24	1

NOTES: 1. TEST IN ACCORDANCE WITH HVAC TESTING/ADJUSTING/BALACING SPECIFICATIONS AND THE PROCESURES IN SMACNA HVAC AIR DUCT LEAKAGE TEST MANUAL, 1985 EDITION.

CLOSED CIRCUIT COOLER SCHEDULE

MARK	LOCATION	TYPE	FLOW RATE (GPM)	MAX WATER PD (FT)	WATER TEMP (°F)		ENTERING AIR (°F)		FANS		SPRAY PUMP	ELECTRIC SUMP HEATER (kW)	ELECTRICAL DATA	
					ENTERING	LEAVING	DB	WB	MAX MOTOR (HP)	DRIVE TYPE	MAX MOTOR (HP)		VOLTAGE	PHASE
CCC-1-A	108 EXTERIOR	INDUCED DRAFT	64	4.2	95	85	83	78	(2) @ 3	BELT	1	4	460	3

NOTES: 1. PROVIDE WITH VARIABLE FREQUENCY DRIVES FOR FAN MOTORS. PROVIDE WITH PREMIUM EFFICIENCY MOTORS.
2. PROVIDE WITH COMBINATION MOTOR/STARTER DISCONNECT FOR SPRAY PUMP. PROVIDE WITH PREMIUM EFFICIENCY MOTORS.
3. PROVIDE DISCONNECT FOR ELECTRIC SUMP HEATER.
4. PROVIDE WITH CHEMICAL-FREE PULSE-POWERED WATER TREATMENT.
5. SEE ELECTRICAL SHEETS FOR LOAD INFORMATION. CCC-1-A DOES NOT HAVE A SINGLE POINT POWER CONNECTION.
6. MAXIMUM CONTROL VALVE PRESSURE DROP OF 5 FT.

LOUVER SCHEDULE

MARK	TYPE	LOCATION	SIZE (IN.)		AIRFLOW (CFM)	MAX. PD (IN. WG)	NOTES
			WIDTH	HEIGHT			
LV-1-A	EXHAUST	108	24	24	1020	0.01	1,2,3,4,5,6
LV-2-A	INTAKE	108	24	24	1020	0.01	1,2,3,4,5,6
LV-3-A	INTAKE	108	24	24	850	0.01	1,2,3,4,5,6
LV-4-A	INTAKE	107	24	24	1080	0.01	1,2,3,4,5,6
LV-5-A	EXHAUST	107	24	24	1080	0.01	1,2,3,4,5,6
LV-6-A	INTAKE	113	16	16	100	0.01	3,4,5,6,7
LV-7-A	INTAKE	112	16	16	100	0.01	3,4,5,6,7

NOTES: 1. LOUVER SHALL PREVENT MOISTURE CARRYOVER BELOW 1000 FPM.
2. PROVIDE INSECT SCREEN ON BUILDING INTERIOR SIDE.
3. PROVIDE WITH ALUMINUM CONSTRUCTION.
4. LOUVER SHALL MEET ALL REQUIREMENTS OF AMCA 500L and AMCA 511.
5. COLOR AND FINISH PER ARCHITECT'S INSTRUCTION.
6. MINIMUM FREE AREA 50%.
7. DOOR LOUVER.

GRILLE, REGISTER, AND DIFFUSER SCHEDULE

MARK	SERVICE	CFM RANGE	MAX SP (IN WG)	NECK/COLLAR SIZE (IN)	SHELL SIZE (IN)	MOUNTING/TYPE	MAX. THROW AT 50 FPM (FT)	MAX NC	NOTES
A	SUPPLY	0-98	0.03	6	24 X 24	LAY-IN 3-CONE	6	10	1,2
B	SUPPLY	98-210	0.04	8	24 X 24	LAY-IN 3-CONE	8	11	1,2
C	RETURN	0-1542	0.05	20 X 20	24 X 24	LAY-IN 1/2"X1/2"X1/2" EGGCRATE	-	14	2,3
D	SUPPLY	130-156	0.01	8 X 6	10 X 8	SURFACE MOUNT LOUVER FACE 22.5° DEFLECTION	18	17	2
E	SUPPLY	335-475	0.01	18 X 6	20 X 8	SURFACE MOUNT LOUVER FACE 22.5° DEFLECTION	28	27	2
F	SUPPLY	518-616	0.01	18 X 8	20 X 10	SURFACE MOUNT LOUVER FACE 22.5° DEFLECTION	33	24	2
G	EXHAUST	0-200	0.01	8 X 8	8 X 8	SURFACE MOUNT 1/2"X1/2"X1/2" EGGCRATE	-	11	2

NOTES: 1. PATTERN: 4-WAY CORE STYLE UNLESS OTHERWISE INDICATED ON DRAWINGS.
2. ALL ALUMINUM CONSTRUCTION.
3. 20 X 20 FILTER GRILLE.

SYM	DESCRIPTION	DATE	APPR

NAVFAC

SEAL

A/E INFO

APPROVED

FOR COMMANDER NAVFAC

ACTIVITY

SATISFACTORY TO DATE

DES JMT DRW JMT CHK TLH

PM/DM M. PERRY/L. SANDERS

BRANCH MANAGER

CHIEF ENG/ARCH

FIRE PROTECTION

DEPARTMENT OF THE NAVY
NAVAL FACILITIES ENGINEERING COMMAND
HAMPTON ROADS IPT
NAVAL FACILITIES ENGINEERING COMMAND - MIDATLANTIC
NAVAL STATION – NORFOLK, VIRGINIA
NAVAL STATION NORFOLK
NORFOLK, VIRGINIA

FY 2016 P-518
MH-60 AVET TRAINING FACILITY

SCHEDULES

SCALE: AS NOTED

EPROJECT NO.: 1291639

CONSTR. CONTR. NO.

NAVFAC DRAWING NO.
12701684

SHEET 88 OF 109

M-602

DRAWFORM REVISION: 10 MARCH 2009

FILE NAME: P:\VA\NavalStationNorfolk\MLCON\2016_1291639_P-518_DRB_MH-60 AVET Training Facility\B_Design\Drawings\Sheet Files\13_Mechanical\M-602.dwg LAYOUT NAME: #-### PLOTTED: Thursday, November 05, 2015 - 9:51pm USER: john.m.taylor1

UNCLASSIFIED//FOR OFFICIAL USE ONLY

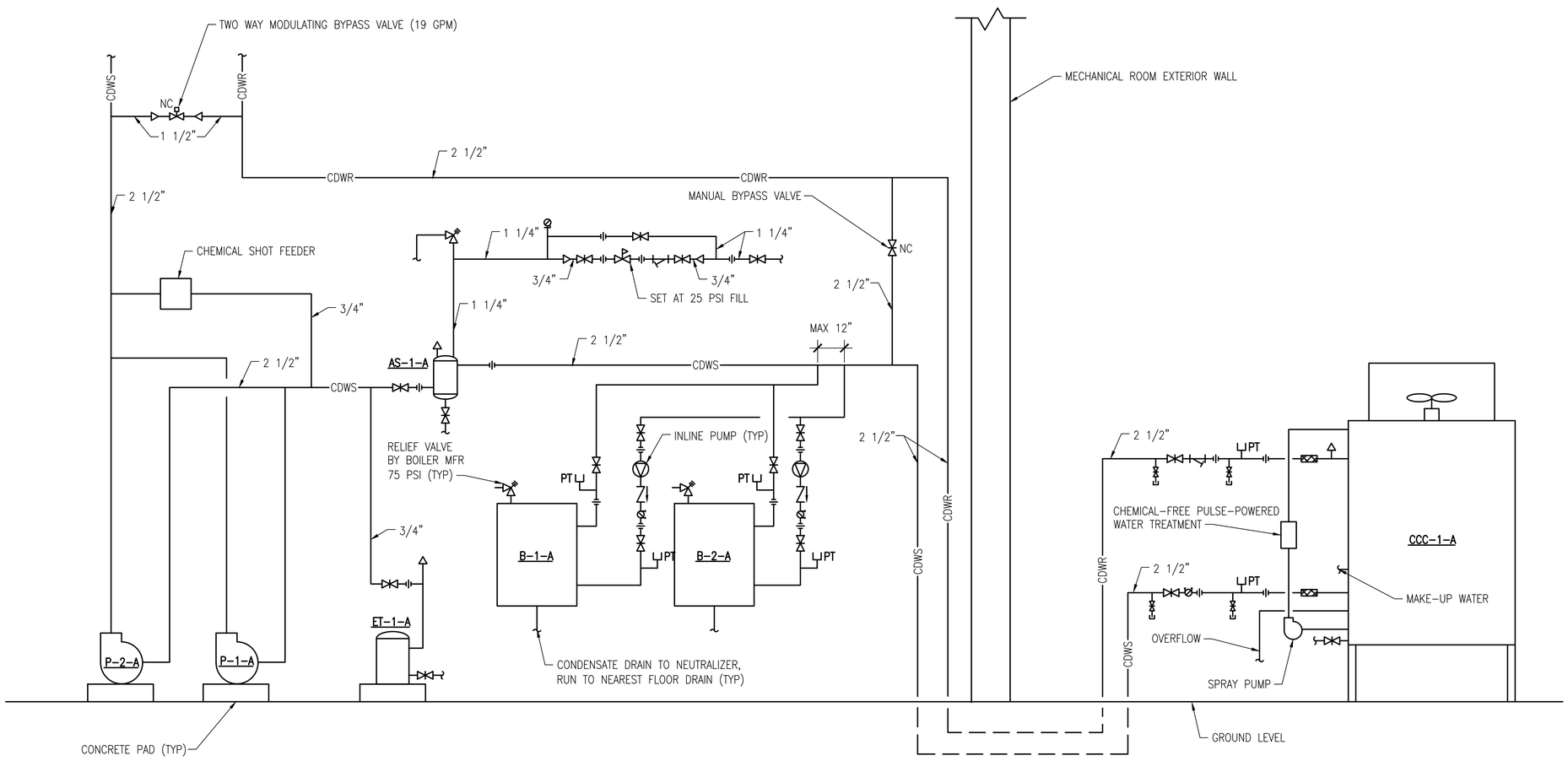

CONDENSER WATER FLOW DIAGRAM

SCALE: NOT TO SCALE

SYM	DESCRIPTION	DATE	APPR

NAVFAC

SEAL

A/E INFO

APPROVED

FOR COMMANDER NAVFAC

ACTIVITY

SATISFACTORY TO DATE

DES JMT DRW JMT CHK TLH

PM/DM M. PERRY/L. SANDERS

BRANCH MANAGER

CHIEF ENG/ARCH

FIRE PROTECTION

DEPARTMENT OF THE NAVY
NAVAL FACILITIES ENGINEERING COMMAND
HAMPTON ROADS IPT
NAVAL FACILITIES ENGINEERING COMMAND - MIDATLANTIC
NAVAL STATION - NORFOLK, VIRGINIA
NAVAL STATION NORFOLK
NORFOLK, VIRGINIA

FY 2016 P-518
MH-60 AVET TRAINING FACILITY

FLOW DIAGRAMS

SCALE: AS NOTED

EPROJECT NO.: 1291639

CONSTR. CONTR. NO.

NAVFAC DRAWING NO.
12701685

SHEET 89 OF 109

M-701

DRAWFORM REVISION: 10 MARCH 2009

FILE NAME: P:\VA\NavalStationNorfolk\MILCON\2016_1291639_P-518_DBB_MH-60 AVET Training Facility\B_Design\Drawings\Sheet Files\13_Mechanical\M-701.dwg LAYOUT NAME: F-### PLOTTED: Thursday, November 05, 2015 - 9:53am USER: john.m.taylor1

UNCLASSIFIED//FOR OFFICIAL USE ONLY

DEDICATED OUTSIDE AIR SYSTEM / EXHAUST FAN CONTROL DIAGRAM

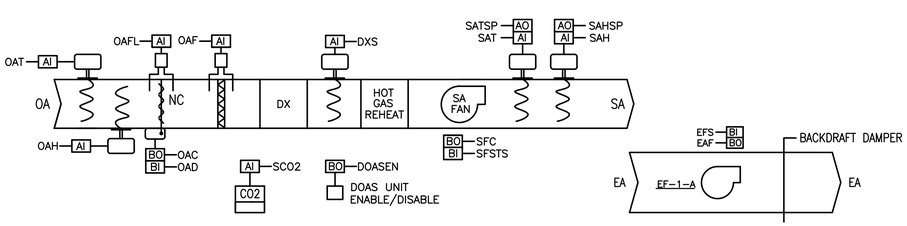

SEQUENCE OF OPERATION

DEDICATED OUTDOOR AIR SYSTEM (DOAS-1-A)

RUN CONDITIONS:
THE UNIT SHALL RUN WHENEVER: OCCUPIED SCHEDULE FROM DDC SYSTEM
THE UNIT SHALL STOP WHENEVER: UNOCCUPIED SCHEDULE FROM DDC SYSTEM, AN EMERGENCY SHUTDOWN SAFETY IS SIGNALED

OCCUPIED MODE: UPON PROOF OF CONDENSER WATER FLOW (AS INDICATED BY THE CONDENSER WATER PUMPS VFD), THE DDC SYSTEM SHALL ENABLE DOAS-1-A AND FULLY OPEN THE CONDENSER WATER CONTROL VALVE. DOAS-1-A SHALL OPERATE UNDER THE MANUFACTURER'S CONTROL PANEL TO CONTROL ALL INTERNAL COMPONENTS TO MAINTAIN LEAVING SUPPLY AIR TEMPERATURE SETPOINT OF 72°F (ADJ.) AND A LEAVING SUPPLY AIR DEW POINT SETPOINT OF 55°F (ADJ.). PRIOR TO ENERGIZING THE SUPPLY FAN TO RUN CONTINUOUSLY, THE MANUFACTURER'S CONTROL PANEL SHALL FULLY OPEN THE INTAKE AIR DAMPER. UPON LOSS OF CONDENSER WATER FLOW (AS INDICATED BY THE CONDENSER WATER PUMPS VFD), THE DDC SYSTEM SHALL DISABLE DOAS-1-A. EF-1-A SHALL BE INTERLOCKED WITH DOAS-1-A TO ENERGIZE WHENEVER DOAS-1-A IS IN OCCUPIED MODE WITH ITS SUPPLY FAN RUNNING AND DE-ENERGIZE UNDER ALL OTHER CONDITIONS.

THE CONTROL SYSTEM SHALL MONITOR OUTSIDE AIR CFM BY UTILIZING A DIFFERENTIAL PRESSURE SENSOR ACROSS THE OUTSIDE AIR DAMPER. THE RELATIONSHIP BETWEEN DIFFERENTIAL PRESSURES ACROSS THE DAMPER AND AIRFLOWS SHALL BE ESTABLISHED IN COORDINATION WITH THE TESTING, ADJUSTING, AND BALANCING TECHNICIAN. PROVIDE AN ALARM WHEN OUTSIDE AIR CFM DROPS BELOW THE SCHEDULED VALUE MINUS 10%.

AN ALARM SHALL BE SENT TO THE DDC UPON SPACE CARBON DIOXIDE LEVEL EXCEEDING 1000 PPM.

HVAC EMERGENCY SHUTDOWN MODE/UNOCCUPIED MODE: THE DDC SYSTEM SHALL DISABLE DOAS-1-A. THE MANUFACTURER'S CONTROL PANEL SHALL DE-ENERGIZE THE SUPPLY AND EXHAUST FAN, AND FULLY CLOSE THE INTAKE AIR DAMPER.

DOAS CONTROL POINTS

POINT	AI	AO	BI	BO	ALARM	TREND
(OAT) OUTSIDE AIR TEMPERATURE (°F)	X					X
(OAH) OUTSIDE AIR RELATIVE HUMIDITY (%)	X					X
(OAD) OUTSIDE AIR DAMPER STATUS			X			
(OAC) OUTSIDE AIR DAMPER COMMAND				X		
(OAPD) OUTSIDE AIR DAMPER PRESSURE DROP (IN. WG)	X					X
(OAFPD) OUTSIDE AIR FILTER PRESSURE DROP (IN. WG)	X				X	
(DXS) LEAVING DX COIL TEMPERATURE (°F)	X					X
(SFC) SUPPLY FAN COMMAND				X		
(SFSTS) SUPPLY FAN STATUS			X		X	
(SAT) SUPPLY AIR TEMPERATURE (°F)	X				X	X
(SAH) SUPPLY AIR RELATIVE HUMIDITY (%)	X				X	X
(SATSP) SUPPLY AIR TEMPERATURE SETPOINT (°F)		X				
(SAHSP) SUPPLY AIR RELATIVE HUMIDITY SETPOINT (%)		X				
(EFS) EXHAUST FAN STATUS (EF-1-A)			X			
(EAF) EXHAUST FAN ENABLE/DISABLE (EF-1-A)				X		
(DOASEN) DOAS UNIT ENABLE/DISABLE			X			
(SCO2) SPACE CARBON DIOXIDE (PPM)	X				X	

HVAC EMERGENCY SHUTDOWN SWITCH CONTROL DIAGRAM

SEE SHEET M-101 FOR LOCATION

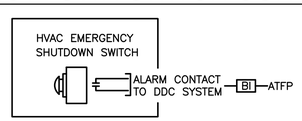

SEQUENCE OF OPERATION

HVAC EMERGENCY SHUTDOWN

THE HVAC EMERGENCY SHUTDOWN SWITCH SHALL BE WIRED TO THE MAIN DDC PANEL. UPON ACTIVATION OF THE HVAC EMERGENCY SHUTDOWN SWITCH BY AN OCCUPANT, THE DEDICATED OUTSIDE AIR SYSTEM (DOAS-1-A) SHALL SHUTDOWN. UPON DEACTIVATION OF THE SWITCH, THE DOAS SHALL RETURN TO NORMAL OPERATION.

ELECTRICAL AND MECHANICAL ROOM SUPPLY FAN CONTROL DIAGRAM

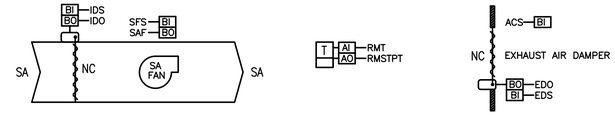

SEQUENCE OF OPERATION

ELECTRICAL ROOM AND MECHANICAL ROOM EXHAUST FANS (SF-1-A, SF-2-A)

UPON A RISE IN SPACE TEMPERATURE ABOVE SET POINT, 85°F (ADJ.), THE DDC SHALL OPEN THE INTAKE AND EXHAUST AIR DAMPERS. UPON PROOF OF DAMPERS OPENING, THE DDC SYSTEM SHALL ENERGIZE THE SUPPLY FAN. UPON A FALL IN SPACE TEMPERATURE BELOW SET POINT, THE REVERSE SHALL OCCUR.

SUPPLY FAN (SF-1-A, SF-2-A) CONTROL POINTS

POINT	AI	AO	BI	BO	ALARM	TREND
(SAF) SUPPLY FAN COMMAND				X		
(SFS) SUPPLY FAN STATUS			X		X	
(IDS) INTAKE DAMPER STATUS			X		X	
(IDO) INTAKE DAMPER COMMAND				X		
(EDS) EXHAUST DAMPER STATUS			X		X	
(EDO) EXHAUST DAMPER COMMAND				X		
(RMT) SPACE TEMPERATURE (°F)	X				X	X
(RMTS) SPACE TEMPERATURE SETPOINT		X				

WATER SOURCE HEAT PUMP CONTROL DIAGRAM

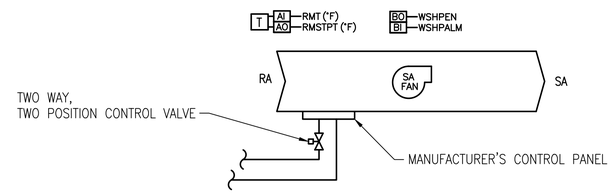

SEQUENCE OF OPERATION

WATER SOURCE HEAT PUMP (TYPICAL FOR ALL WSHP'S)

OCCUPIED MODE: UPON PROOF OF CONDENSER WATER FLOW, THE DDC SYSTEM SHALL ENABLE WSHP-01-A. WSHP-01-A SHALL OPERATE UNDER THE MANUFACTURER'S CONTROL PANEL TO CONTROL TWO WAY, TWO POSITION CONTROL AND ALL INTERNAL UNIT COMPONENTS TO MAINTAIN OCCUPIED SPACE TEMPERATURE SET POINTS AS INDICATED IN THE DESIGN CONDITIONS SCHEDULE. THE SUPPLY FAN SHALL RUN CONTINUOUSLY. UPON LOSS OF CONDENSER WATER FLOW, THE DDC SYSTEM SHALL DISABLE WSHP-01-A.

UNOCCUPIED MODE: UPON PROOF OF CONDENSER WATER FLOW, THE DDC SYSTEM SHALL ENABLE WSHP-01-A. WSHP-01-A SHALL OPERATE UNDER THE MANUFACTURER'S CONTROL PANEL TO CONTROL TWO WAY, TWO POSITION CONTROL AND ALL INTERNAL UNIT COMPONENTS TO MAINTAIN UNOCCUPIED SPACE TEMPERATURE SET POINTS AS INDICATED IN THE DESIGN CONDITIONS SCHEDULE. THE SUPPLY FAN SHALL RUN CONTINUOUSLY. UPON LOSS OF CONDENSER WATER FLOW, THE DDC SYSTEM SHALL DISABLE WSHP-01-A.

HVAC EMERGENCY SHUTDOWN MODE: THE DDC SYSTEM SHALL DISABLE WSHP-01-A.

EXCEPTION: WSHP-04,05-A AND WSHP-07,08-A SHALL OPERATE IN TANDEM TO MAINTAIN SPACE TEMPERATURE AS INDICATED IN THE DESIGN CONDITIONS SCHEDULE. WSHP-06-A AND WSHP-09-A PROVIDE REDUNDANCY TO SAID UNITS, RESPECTIVELY. IF UNITS WSHP-04,05,07,08-A FAIL TO START, WSHP-06-A OR WSHP-09-A SHALL BE ENERGIZED TO MAINTAIN SPACE TEMPERATURE.

WATER SOURCE HEAT PUMP CONTROL POINTS

POINT	AI	AO	BI	BO	ALARM	TREND
(RMT) ROOM TEMPERATURE (°F)	X					X
(RMSTPT) SPACE TEMPERATURE SETPOINT (°F)		X				X
(WSHPEN) ENABLE/DISABLE				X		
(WSHPSTS) STATUS			X		X	
(WSHPALM) MANUFACTURER'S CONTROL PANEL ALARM			X		X	

GENERAL SHEET NOTES

1. CONTROLS CONTRACTOR IS RESPONSIBLE FOR COORDINATING WITH THE BAS OWNER AND PROVIDING INTEGRATION OF THE NEW DDC SYSTEM TO THE EXISTING BACNET FRONT-END SERVER AND EXISTING APPLICATION SOFTWARE, WHICH SHALL BE CHOSEN BY THE BAS OWNER. DISPLAY ALL GRAPHIC FLOOR PLANS, EQUIPMENT GRAPHICS, DDC LADDER DIAGRAMS, AND SEQUENCE OF OPERATIONS GRAPHIC PAGES. ALL NEW GRAPHICS SHALL MATCH EXISTING AND BE APPROVED BY THE BAS OWNER. PROVIDE ALL ALARMING, TREND SERVICES, SCHEDULES AND OTHER BACNET SERVICES AS DESCRIBED IN SPECIFICATION SECTION 23 09 23.13 20.
2. THE BAS OWNER AND DDC POC FOR THE PROJECT IS KEITH POWELL (757-341-1099) AND DAVID REYNA (757-341-0733). CONTACT THE BAS OWNER FOR ACCESS TO THE EXISTING BACNET SERVER AND INFORMATION REGARDING SOFTWARE, BACNET ADDRESSING, COMMUNICATIONS, TRAINING, SITE CONDITIONS, AND GENERAL TECHNICAL SUPPORT.
3. ALL OPERATOR WORKSTATION FUNCTIONS REQUIRING BACNET SERVICES, INCLUDING NAVIGATING THROUGH THE GRAPHIC DISPLAYS, TRENDING, ALARMING AND MONITORING OF THE NEW BACNET CONTROLS SYSTEM, MUST BE DEMONSTRATED FROM THE EXISTING BACNET FRONT-END SERVER USING ONLY THE EXISTING APPLICATION SOFTWARE, EXISTING BAS JOHNSON CONTROLS SERVER AT BLDG. A-81 NAVAL STATION NORFOLK, AND WITHOUT THE NEED TO LAUNCH OTHER APPLICATIONS OR LOGON TO OTHER VENDOR APPLICATIONS. INTEGRATE ALL NEW BACNET POINTS ON THE EXISTING SERVER SO THAT THERE IS A SEAMLESS LOGICAL FLOW FROM THE EXISTING FACILITIES TO THE NEW FACILITIES. TRENDED DDC POINTS SHALL INCLUDE ALL PHYSICAL AND SOFTWARE POINTS REQUIRED FOR REVIEWING AND ANALYZING THE BUILDINGS COMMISSIONED SYSTEMS.
4. CONTROLS CONTRACTOR IS RESPONSIBLE FOR COORDINATING WITH THE BAS OWNER FOR THE CORRECT DDC POINT NAMING CONVENTIONS.
5. MECHANICAL EQUIPMENT WHICH IS PROVIDED WITH MANUFACTURER'S INSTALLED CONTROLS SHALL BE STARTED UP BY THE MANUFACTURER'S REPRESENTATIVE IN CONJUNCTION WITH THE CONTROLS CONTRACTOR. CONTROLS CONTRACTOR IS RESPONSIBLE FOR COORDINATING WITH MANUFACTURER'S REPRESENTATIVE FOR THE COMMUNICATION OF THE DDC SYSTEM TO THE MANUFACTURER'S INSTALLED CONTROLS.

CONTROL LEGEND

- T — SPACE TEMPERATURE SENSOR
- CO2 — SPACE CARBON DIOXIDE SENSOR
- RELAY
- DUCT MOUNTED TEMPERATURE SENSOR (AVERAGING)
- DAMPER ACTUATOR (ELECTRIC ACTUATOR)
- DAMPER
- FILTER
- DIFFERENTIAL PRESSURE SENSOR (AIR)
- DPS — DIFFERENTIAL PRESSURE SENSOR (WATER)

CONTROL ABBREVIATIONS

(A)	ALARMABLE DDC POINT
AI	ANALOG INPUT
AO	ANALOG OUTPUT
BI	BINARY INPUT
BO	BINARY OUTPUT
DISCH.	DISCHARGE
DSL	DIGITAL SUBSCRIBER LINE
DX	DIRECT EXPANSION COOLING COIL
DSD	DUCT SMOKE DETECTOR
EA	EXHAUST AIR
ELEC.	ELECTRICAL
LVG	LEAVING AIR
NC	NORMALLY CLOSED
NO	NORMALLY OPEN
OA	OUTSIDE AIR
RA	RETURN AIR
SA	SUPPLY AIR
TEMP	TEMPERATURE
UPS	UNINTERRUPTABLE POWER SUPPLY
VFD	VARIABLE FREQUENCY DRIVE

SYM	DESCRIPTION	DATE	APPR

NAVFAC

SEAL

A/E INFO

APPROVED

FOR COMMANDER NAVFAC

ACTIVITY

SATISFACTORY TO DATE

DES JMT DRWN JMT CHK TLH
PM/DM M. PERRY/L. SANDERS
BRANCH MANAGER
CHIEF ENG/ARCH
FIRE PROTECTION

DEPARTMENT OF THE NAVY
NAVAL FACILITIES ENGINEERING COMMAND
HAMPTON ROADS IPT
NAVAL FACILITIES ENGINEERING COMMAND - MIDATLANTIC
NAVAL STATION - NORFOLK, VIRGINIA
NAVAL STATION NORFOLK NORFOLK, VIRGINIA
FY 2016 P-518
MH-60 AVET TRAINING FACILITY
CONTROLS

SCALE: AS NOTED
EPROJECT NO.: 1291639
CONSTR. CONTR. NO.
NAVFAC DRAWING NO. 12701686
SHEET 90 OF 109
M-801

DRAWFORM REVISION: 10 MARCH 2009

FILE NAME: P:\VA\NavalStationNorfolk\MLCON\2016_1291639_P-518_DBB_MH-60 AVET Training Facility\B_Design\Drawings\Sheet Files\13_Mechanical\M-801.dwg LAYOUT NAME: F-### PLOTTED: Thursday, November 05, 2015 - 9:54am USER: john.m.taylor1

CONDENSER WATER SYSTEM CONTROL DIAGRAM

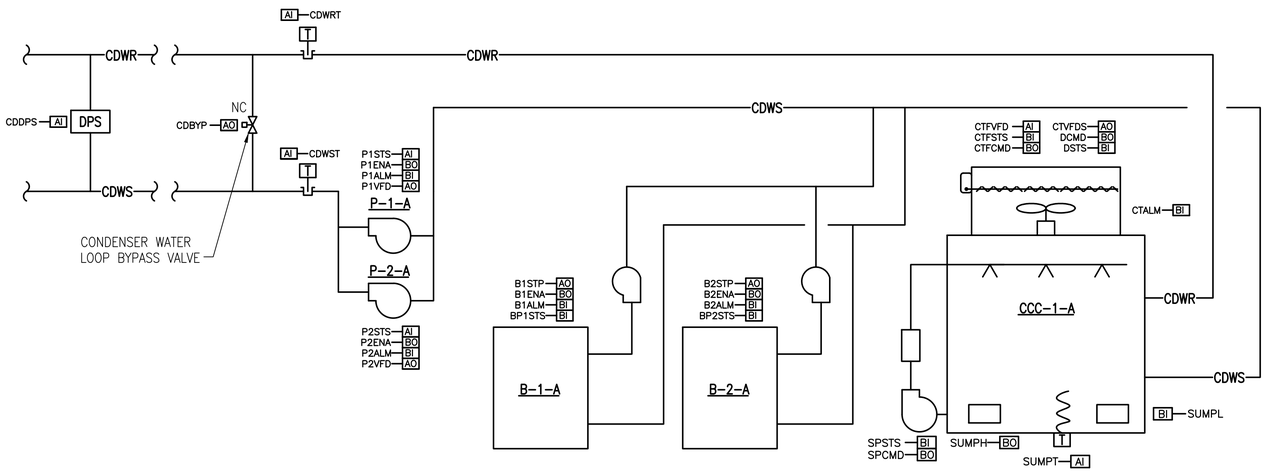

SEQUENCE OF OPERATION

CONDENSER WATER SYSTEM

CONDENSER WATER PUMPS (P-1,2-A): THE DDC SYSTEM SHALL ENABLE AND DISABLE CONDENSER WATER PUMPS P-1,2-A. THE PUMPS SHALL OPERATE IN A LEAD/STANBY CONFIGURATION THROUGH A VFD CONTROLLER. THE LEAD PUMP SHALL BE ENERGIZED BY THE DDC SYSTEM AND SHALL OPERATE CONTINUOUSLY. THE DDC SYSTEM SHALL ALTERNATE PUMPS WEEKLY BY SELECTING THE PUMP WITH THE LEAST TOTAL ACCUMULATED RUN TIME AS CALCULATED AND SORTED AT THE VFD CONTROLLER. IF THE LEAD PUMP DOES NOT PROVE FLOW WITHIN 30 SECONDS AFTER THE START SIGNAL, THE DDC SYSTEM SHALL SWITCH THE LEAD PUMP TO THE STANDBY PUMP AN ALARM SHALL BE GENERATED BY THE DDC SYSTEM. A PROGRAMMED ANTI-RECYCLE TIMER SHALL AUTOMATICALLY ATTEMPT A RE-START OF THE FAILED PUMP ON A PERIODIC BASIS TO ACCOMMODATE FOR SERVICE SHUTDOWNS AND EXTENDED POWER OUTAGES.

A CONDENSER WATER DIFFERENTIAL PRESSURE SENSOR SHALL MODULATE THE CONDENSER WATER PUMPS VFD SPEED TO MAINTAIN CONDENSER WATER LOOP DIFFERENTIAL PRESSURE SET POINT OF 6 PSI (ADJ.) THE VFD SPEED SHALL NOT DROP BELOW 30% (ADJ.). UPON THE LEAD PUMP BEING INDEXED TO MINIMUM SPEED, THE DDC SYSTEM SHALL MODULATE OPEN THE CONDENSER WATER BYPASS CONTROL VALVE AND LEAD PUMP SPEED TO MAINTAIN CONDENSER WATER LOOP DIFFERENTIAL PRESSURE SETPOINT. UPON THE LEAD PUMP VFD BEING INDEXED ABOVE 30% (ADJ.), THE DDC SYSTEM SHALL CLOSE THE CONDENSER WATER BYPASS CONTROL VALVE.

CLOSED CIRCUIT COOLER (CCC-1-A): UPON PROOF OF CONDENSER WATER FLOW (AS INDICATED BY THE CONDENSER WATER PUMPS VFD), THE DDC SYSTEM SHALL ENABLE CLOSED CIRCUIT COOLER CCC-1-A. THE CLOSED CIRCUIT COOLER SHALL OPERATE TO MAINTAIN A MAXIMUM LEAVING CONDENSER WATER TEMPERATURE SET POINT OF 85°F (ADJ.). ON A RISE IN LEAVING CONDENSER WATER TEMPERATURE ABOVE THE SET POINTS GIVEN BELOW, THE DAMPERS, SPRAY PUMPS AND FANS SHALL BE STAGED ON. THE FAN VFD SHALL MODULATE FAN SPEED TO MAINTAIN LEAVING CONDENSER WATER TEMPERATURE SET POINT. ON A FALL IN LEAVING CONDENSER WATER TEMPERATURE BELOW THE SET POINTS GIVEN BELOW, THE DAMPERS, SPRAY PUMPS AND FAN SHALL BE STAGED OFF. TO PREVENT SHORT-CYCLING OF THE FAN MOTORS, THERE SHALL BE A MINIMUM DELAY BETWEEN STAG OFF AND STAGE ON. THE MANUFACTURER'S CONTROL PANEL SHALL MONITOR THE SUMP WATER TEMPERATURES AND ENERGIZE THE ELECTRIC SUMP HEATER UPON A FALL IN SUMP WATER TEMPERATURE BELOW 40°F (ADJ.). UPON LOSS OF CONDENSER WATER FLOW (AS INDICATED BY THE CONDENSER WATER PUMPS VFD), THE DDC SYSTEM SHALL DISABLE CLOSED CIRCUIT COOLER CCC-1-A.

STAGE ON IF LOOP TEMPERATURE RISES ABOVE SET POINT OF (°F, ADJ.):
TOWER DAMPERS: 80, SPRAY PUMPS/WATER TREATMENT: 83, FAN VFD'S: 85

STAGE OFF IF LOOP TEMPERATURE FALLS BELOW SET POINT OF (°F, ADJ.):
TOWER DAMPERS: 76, SPRAY PUMPS/ WATER TREATMENT: 79, FAN VFD'S: 81

BOILERS (B-1,2-A): UPON PROOF OF CONDENSER WATER FLOW (AS INDICATED BY THE CONDENSER WATER PUMPS VFD), THE DDC SYSTEM SHALL ENABLE BOILERS B-1,2-A. THE BOILERS SHALL OPERATE SUBJECT TO ITS OWN INTERNAL SAFETIES AND CONTROLS. THE BOILER PUMPS SHALL CYCLE ON AND OFF WITH THE BURNERS AND OPERATE UNDER THE BOILER MANUFACTURER'S CONTROL PANEL. THE BOILERS SHALL OPERATE UNDER THE MANUFACTURER'S CONTROL PANEL TO MAINTAIN A MINIMUM LEAVING CONDENSER WATER TEMPERATURE SET POINT OF 50°F (ADJ.). THE DDC SYSTEM SHALL ALTERNATE FIRING ORDER OF THE BOILERS WEEKLY BY SELECTING THE BOILER WITH THE LEAST TOTAL ACCUMULATED RUN TIME AS CALCULATED AND SORTED BY THE DDC SYSTEM. THE BOILER MANUFACTURER'S CONTROL PANEL SHALL OPERATE IN CASCADE MODE BY INDEXING THE FIRST BOILER TO 100% BEFORE ENERGIZING THE SECOND BOILER. BOILER SHUTDOWN SHALL OCCUR IN THE REVERSE ORDER. THE BOILERS SHALL MODULATE GAS FIRE RATE AS NEEDED. UPON A LOSS OF CONDENSER WATER FLOW (AS INDICATED BY THE CONDENSER WATER PUMPS VFD), THE DDC SYSTEM SHALL DISABLE BOILERS B-1,2-A.

CONDENSER WATER SYSTEM CONTROL POINTS

POINT	AI	AO	BI	BO	ALARM	TREND
(CDDPS) LOOP DIFFERENTIAL PRESSURE SENSOR (IN. WG)	X					
(CDBYP) CONDENSER WATER BYPASS VALVE (% OPEN)		X				X
(CDWST) CONDENSER WATER SUPPLY TEMPERATURE (°F)	X					X
(CDWRT) CONDENSER WATER RETURN TEMPERATURE (°F)	X					X
(P1STS) PUMP VFD SPEED STATUS (P-1-A) (%)	X					
(P1ENA) PUMP ENABLE/DISABLE (P-1-A)				X		
(P1ALM) PUMP STATUS (P-1-A)			X		X	
(P1VFD) PUMP VFD COMMAND (P-1-A) (%)		X				X
(P2STS) PUMP VFD SPEED STATUS (P-2-A) (%)	X					
(P2ENA) PUMP ENABLE/DISABLE (P-2-A)				X		
(P2ALM) PUMP STATUS (P-2-A)			X		X	
(P2VFD) PUMP VFD COMMAND (P-2-A) (%)		X				X
(B1STP) BOILER SETPOINT ADJUST (B-1-A) (°F)		X				
(B1ENA) BOILER ENABLE/DISABLE (B-1-A) (°F)				X		
(B1ALM) BOILER MANUFACTURER'S CONTROL PANEL ALARM (B-1-A)			X		X	
(BP1STS) BOILER PUMP STATUS (B-1-A)			X			
(B2STP) BOILER SETPOINT ADJUST (B-2-A) (°F)		X				
(B2ENA) BOILER ENABLE/DISABLE (B-2-A) (°F)				X		
(B2ALM) BOILER MANUFACTURER'S CONTROL PANEL ALARM (B-2-A)			X		X	
(BP2STS) BOILER PUMP STATUS (B-2-A)			X			
(CTFVFD) COOLING TOWER FAN VFD COMMAND (%)		X				X
(CTFSTS) COOLING TOWER FAN STATUS			X			
(CTFCMD) COOLING TOWER FAN COMMAND				X		
(CTVFDS) COOLING TOWER FAN VFD SPEED STATUS (%)	X					
(DCMD) COOLING TOWER DAMPER COMMAND				X		
(DSTS) COOLING TOWER DAMPER STATUS			X			
(CTALM) COOLING TOWER MANUFACTURERS CONTROL PANEL ALARM			X		X	
(SPSTS) SPRAY PUMP STATUS			X			
(SPCMD) SPRAY PUMP COMMAND				X		
(SUMPH) SUMP HEATER COMMAND				X		
(SUMPT) SUMP TEMPERATURE (°F)	X					
(SUMPL) SUMP LEVEL STATUS			X			

BUILDING UTILITIES MONITORING CONTROL DIAGRAM

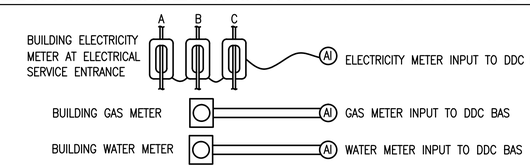

NOTE: BUILDING UTILITIES MONITORING WILL ONLY BE PROVIDED FOR THE APPLIED INSTRUCTION FACILITY.

BUILDING UTILITIES MONITORING CONTROL POINTS

POINT	AI	AO	BI	BO	ALARM	TREND
(WAM) WATER METER	X					X
(GAM) GAS METER	X					X
(ELM) ELECTRICITY METER	X					X

DUCTLESS SPLIT-SYSTEM HEAT PUMP CONTROL DIAGRAM

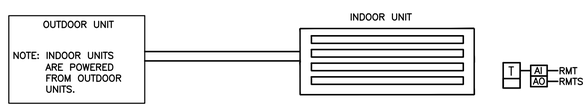

SEQUENCE OF OPERATION

DUCTLESS SPLIT-SYSTEM HEAT PUMP (HPIU-1-A & HPOU-1-A)

DUCTLESS SPLIT SYSTEM HEAT PUMPS SHALL OPERATE UNDER MANUFACTURER'S CONTROL TO MAINTAIN SPACE TEMPERATURE SETPOINT (COOLING 78°F, ADJ., HEATING 68°F, ADJ.). IF SPACE TEMPERATURE RISES ABOVE COOLING SETPOINT OR BELOW HEATING SETPOINT FOR A PERIOD OF 5 MINUTES, AN ALARM SHALL BE SIGNALED BY THE DDC SYSTEM.

DUCTLESS SPLIT SYSTEM HEAT PUMP CONTROL POINTS

POINT	AI	AO	BI	BO	ALARM	TREND
(RMT) SPACE TEMPERATURE (°F)	X				X	X
(RMTS) SPACE TEMPERATURE SETPOINT (°F)		X				

ELECTRIC UNIT HEATER CONTROL DIAGRAM

SEQUENCE OF OPERATION

ELECTRIC UNIT HEATER (TYP FOR ALL EUHs AND CUHs)

ON A DROP IN SPACE TEMPERATURE BELOW THE HEATING SETPOINT (50°F), THE HEATER'S INTEGRAL THERMOSTAT SHALL ENERGIZE THE ELECTRIC COIL AND FAN. ON A RISE IN SPACE TEMPERATURE ABOVE THE HEATING SETPOINT, THE REVERSE SHALL OCCUR. UPON A DROP IN SPACE TEMPERATURE BELOW SETPOINT FOR A PERIOD OF 5 MINUTES (ADJ.), AN ALARM SHALL BE SIGNALED BY THE DDC SYSTEM.

ELECTRIC UNIT HEATER CONTROL POINTS

POINT	AI	AO	BI	BO	ALARM	TREND
(RMT) SPACE TEMPERATURE (°F)	X				X	X
(RMTS) SPACE TEMPERATURE SETPOINT (°F)		X				

DDC CONNECTION TO EXISTING BAS

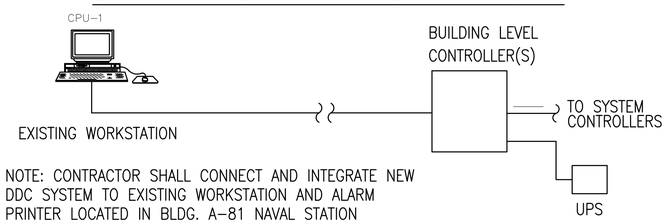

NOTE: CONTRACTOR SHALL CONNECT AND INTEGRATE NEW DDC SYSTEM TO EXISTING WORKSTATION AND ALARM PRINTER LOCATED IN BLDG. A-81 NAVAL STATION NORFOLK (NSN). INTEGRATE INTO EXISTING BAS JOHNSON CONTROLS SERVER IN BLDG. A-81 NSN.

SYM	DESCRIPTION	DATE	APPR

NAVFAC

SEAL

A/E INFO

APPROVED

FOR COMMANDER NAVFAC

ACTIVITY

SATISFACTORY TO DATE

DES JMT DRW JMT CHK TLH
PM/DM M. PERRY/L. SANDERS
BRANCH MANAGER
CHIEF ENG/ARCH
FIRE PROTECTION

DEPARTMENT OF THE NAVY
NAVAL FACILITIES ENGINEERING COMMAND
HAMPTON ROADS IPT
NAVAL FACILITIES ENGINEERING COMMAND - MIDATLANTIC
NAVAL STATION NORFOLK
NAVAL STATION - NORFOLK, VIRGINIA
NORFOLK, VIRGINIA

FY 2016 P-518
MH-60 AVET TRAINING FACILITY

CONTROLS

SCALE: AS NOTED
EPROJECT NO.: 1291639
CONSTR. CONTR. NO.
NAVFAC DRAWING NO. 12701687
SHEET 91 OF 109

M-802

DRAWFORM REVISION: 10 MARCH 2009

FILE NAME: P:\VA\NorfolkStationNorfolk\MI.CON\2016_1291639_P-518_DRB_MH-60 AVET Training Facility\BI_Design\Drawings\Sheet Files\13_Mechanical\M-802.dwg LAYOUT NAME: #-### PLOTTED: Thursday, November 05, 2015 - 9:55am USER: john.m.taylor1