ELECTRICAL LEGEND

1.	GENERAL NOTE TAG – REFER TO "GENERAL NOTES THIS SHEET" FOR EACH SHEET
1	DEMOLITION NOTE TAG – REFER TO "DEMOLITION NOTES – THIS SHEET" FOR EACH SHEET
1	NEW WORK NOTE TAG – REFER TO "NEW WORK NOTES – THIS SHEET" FOR EACH SHEET
A	LIGHTING FIXTURE TYPE. SEE LIGHTING FIXTURE SCHEDULE E–603
	FLUORESCENT LIGHTING FIXTURE.
	FLUORESCENT LIGHTING FIXTURE WITH EMERGENCY BALLAST.
H	LED WALL MOUNTED LIGHTING FIXTURES EXT/INT UON.
	LED OBSTRUCTION LIGHT ROOF MOUNTED. SEE E–101
H	WALL–MOUNTED EXIT LIGHTING FIXTURE.
	EXIT LIGHTING FIXTURE, CEILING–MOUNTED. ARROW, WHEN USED, INDICATES DIRECTION.
	EMERGENCY, BATTERY POWERED LIGHTING FIXTURE.
S	TOGGLE SWITCH, SINGLE POLE, UON
S_3	TOGGLE SWITCH, 3 WAY, SUBSCRIPT (3), UON
S_4	TOGGLE SWITCH, 4 WAY, SUBSCRIPT (4), UON
S_O	SWITCH, OCCUPANCY, SUBSCRIPT (O) DENOTES OCCUPANCY SENSOR WHEN USED, UON
	ELECTRICAL PANELBOARD (480Y/277V). PROVIDE ARC–FLASH WARNING LABEL.
	ELECTRICAL PANELBOARD (120Y/208V). PROVIDE ARC–FLASH WARNING LABEL.
J	JUNCTION BOX SIZE AS INDICATED.
M 5	MOTOR CONNECTION, HP AS INDICATED.
3P-30/20	DISCONNECT SWITCH. IN NEMA 3R ENCL. UON. 3P = # OF POLES, 30 = SWITCH RATING 20 = FUSE RATING (NF INDICATES NON–FUSIBLE).
	DUPLEX CONVENIENCE RECEPTACLE. 20A., 125V. MOUNT 18" AFF UON. GFI = GROUND FAULT PROTECTION.
E	EQUIPMENT CONNECTION AS NOTED.
S_M	MOTOR RATED SWITCH OR MANUAL MOTOR STARTER WITH OVERLOADS.
A–1,2,3	HOMERUNS TO PANEL. PANEL & CIRCUIT DESIGNATIONS AS INDICATED.
OR	BRANCH CIRCUIT OR FEEDER WIRING IN CONDUIT. TICK MARKS, WHEN SHOWN, INDICATE NUMBER OF #12 CONDUCTORS IF OTHER THAN THREE ; (↓) INDICATES GROUND. CONDUIT LARGER THAN 3/4" & WIRE LARGER THAN #12 SHALL BE AS INDICATED.
	INDICATES A CONDUIT RUN CONCEALED IN CEILING, WALL, FLOOR, OR ABOVE SUSPENDED CEILING UON.
T	DRY TYPE TRANSFORMER. PROVIDE ARC–FLASH WARNING LABEL.
	TELECOMMUNICATIONS OUTLET (2 DATA, 1 VOICE & 1 SPACE) MOUNT 18" AFF UON.
	SIPRNET OUTLET (1 DATA) MOUNT 18" AFF UON.
	TELEPHONE TERMINAL BACKBOARD OR PANEL.
CT	CABLE TRAY, 12" X 4" WALL/CEILING MOUNT 12' AFF.
BS	DPDT DOOR BALANCED MAGNETIC SWITCH
E	ACTUAL MECHANICAL EQUIPMENT CIRCUITS CONNECTION. SEE E–103 FOR EQUIPMENT LOCATIONS
USL	UNDERGROUND LIGHTING CIRCUIT, 277V, 2 #10 AND 1 #12 GND IN 1" C. UON.
	AREA/STREET LIGHTING POLE WITH LUMINARIES TYPE S2, 25' AFG.
L	EXISTING #4/0 BARE COPPER LIGHTNING PROTECTION MAIN CONDUCTOR ON ROOF
L	# 4/0 BARE COPPER LIGHTNING PROTECTION MAIN CONDUCTOR ON ROOF
B	# 4/0 BARE COPPER BONDING CONDUCTOR TO BUILDING STEEL AND BUILDING GROUNDING GRID
D	# 4/0 BARE COPPER LIGHTNING PROTECTION DOWN CONDUCTOR TO BUILDING GROUNDING GRID
G	#4/0 BARE COPPER MAIN GROUNDING CONDUCTOR
	EXISTNG LIGHTNING PROTECTION AIR TERMINAL
	LIGHTNING PROTECTION AIR TERMINAL, 18" HEIGHT
	EXOTHERMIC WELD FOR BUILDING STEEL BONDING CONNECTION. SEE E–502 FOR BONDING CONNECTION DETAILS.
	LIGHTNING PROTECTION BONDING CONNECTION. SEE G4 DETAIL ON E–502
	EXISTING GROUND ROD
	GROUND ROD, 3/4 DIA, 10' LONG
	EXOTHERMIC WELD BONDING CONNECTION.
	EXISTING TO NEW CONNECTION
	RECEPTACLE NEMA 6–30, WALL MOUNT 18" AFF. SEE E–501 EXISTING FULL MOTION T/OFT ROOM PLANS.
PB	ROLL UP DOOR PUSH BUTTON

ELECTRICAL ONE-LINE LEGEND

	POWER TRANSFORMER.
	DELTA CONNECTION.
	GROUND CONNECTION.
	GROUNDED WYE CONNECTION.
	MOLDED CASE CIRCUIT BREAKER.
	CABLE OR BUS, TYPE OR CHARACTERISTIC AS INDICATED

GENERAL NOTES

1. ELECTRICAL EQUIPMENT SHALL BE IDENTIFIED AND LABELED. ALL FEEDERS/CIRCUITS SHALL BE IDENTIFIED AT EACH END OF THE WIRE AND AT EVERY SPLICE OR JUNCTION/PULL BOX.
2. DRAWINGS ARE BASED ON EXISTING BUILDING PLANS AND FIELD INVESTIGATIONS. CONTRACTOR SHALL VISIT THE EXISTING BUILDING AND ACQUAINT HIMSELF/HERSELF WITH THE EXISTING FIELD CONDITIONS. CONTRACTOR SHALL EXAMINE ALL DRAWINGS TO AVOID CONFLICT.
3. ARC FLASH WARNING LABEL SHALL BE USED ON ALL POWER EQUIPMENT AND SHALL BE SIMILAR TO DETAIL AF–1, SEE SHEET E–702 FOR WARNING LABEL.
4. SEE ARCHITECTURE PLAN FOR ROOMS NAMES AND NUMBERS
5. ALL ELECTRICAL WORK AND MATERIAL IS NEW AND SHALL BE PROVIDED BY THE CONTRACTOR UNLESS INDICATED OTHERWISE.
6. ALL ELECTRICAL SYMBOLS SHOWN DASHED WITH AN X MARK THRU INDICATE EXISTING AND SHALL BE REMOVED, INCLUDING WIRING CIRCUITS COMPLETE. UNLESS INDICATED OTHERWISE.
7. COORDINATE WORK WITH UNDERGROUND UTILITIES PER CIVIL PLANS
8. COORDINATE WORK WITH LANDSCAPING PLANS

ABBRAVIATIONS

AFF	ABOVE FINISHED FLOOR
AFG	ABOVE FINISHED GRADE
C	CONDUIT
CB	CIRCUIT BREAKER
DWG	DRAWING
EA	EACH
ECB	ENCLOSED CIRCUIT BREAKER
EMT	ELECTRICAL METALLIC TUBING
ESS	ELECTRONIC SECURITY SYSTEM
EXIST	EXISTING
EXT	EXTERIOR
GFI	GROUND FAULT CIRCUIT INTERRUPTER
GND	GROUND
HH	HANDHOLE
HPOU	HEAT PUMP OUTSIDE UNIT
HRU	HEAT RECOVERY UNIT
IDF	INTERMEDIATE DISTRIBUTION FRAME
MCB	MAIN CIRCUIT BREAKER
MDF	MAIN DISTRIBUTION FRAME
MDP	MAIN DISTRIBUTION PANEL
MH	MANHOLE
MLO	MAIN LUGS ONLY
MSB	MAIN SWITCHBOARD
NAC	NOTIFICATION APPLIANCE CIRCUIT
NEC	NATIONAL ELECTRICAL CODE
NTS	NOT TO SCALE
PDS	PROTECTED DISTRIBUTION SYSTEM
PNL	PANEL
REC	RECEPTACLE
RGS	RIGID GALVANIZED STEEL
RM	ROOM
TBB	TELECOMMUNICATION BONDING BAR
TYP	TYPICAL
UON	UNLESS OTHERWISE NOTED
V	VOLTS
WP	WEATHERPROOF
XFMR	TRANSFORMER

SYM	DESCRIPTION	DATE	APPR

NAVFAC

SEAL

A/E INFO

APPROVED

FOR COMMANDER NAVFAC

ACTIVITY

SATISFACTORY TO DATE

DES HKL DRW HKL CHK KDL

PM/DM M. PERRY/L. SANDERS

BRANCH MANAGER KDL

CHIEF ENG/ARCH RW

FIRE PROTECTION

DEPARTMENT OF THE NAVY
NAVAL FACILITIES ENGINEERING COMMAND
HAMPTON ROADS IPT
NAVAL FACILITIES ENGINEERING COMMAND - MIDATLANTIC
NAVAL STATION – NORFOLK, VIRGINIA
NAVAL STATION NORFOLK
NORFOLK, VIRGINIA

FY 2016 P-518
MH-60 AVET TRAINING FACILITY

LEGENDS AND ABBRIVIATIONS

SCALE: AS NOTED

EPROJECT NO.: 1291639

CONSTR. CONTR. NO.

NAVFAC DRAWING NO. 12701689

SHEET 92 OF 109

E-001

DRAWFORM REVISION: 10 MARCH 2009

FILE NAME: P:\VA\NavalStationNorfolk\MLCON\2016_1291639_P-518_DBB_MH-60 AVET Training Facility\B_Design\Drawings\Sheet Files\14_Electrical\1291639_E001.dwg LAYOUT NAME: E-001 PLOTTED: Wednesday, November 04, 2015 - 9:05pm USER: hien.lam

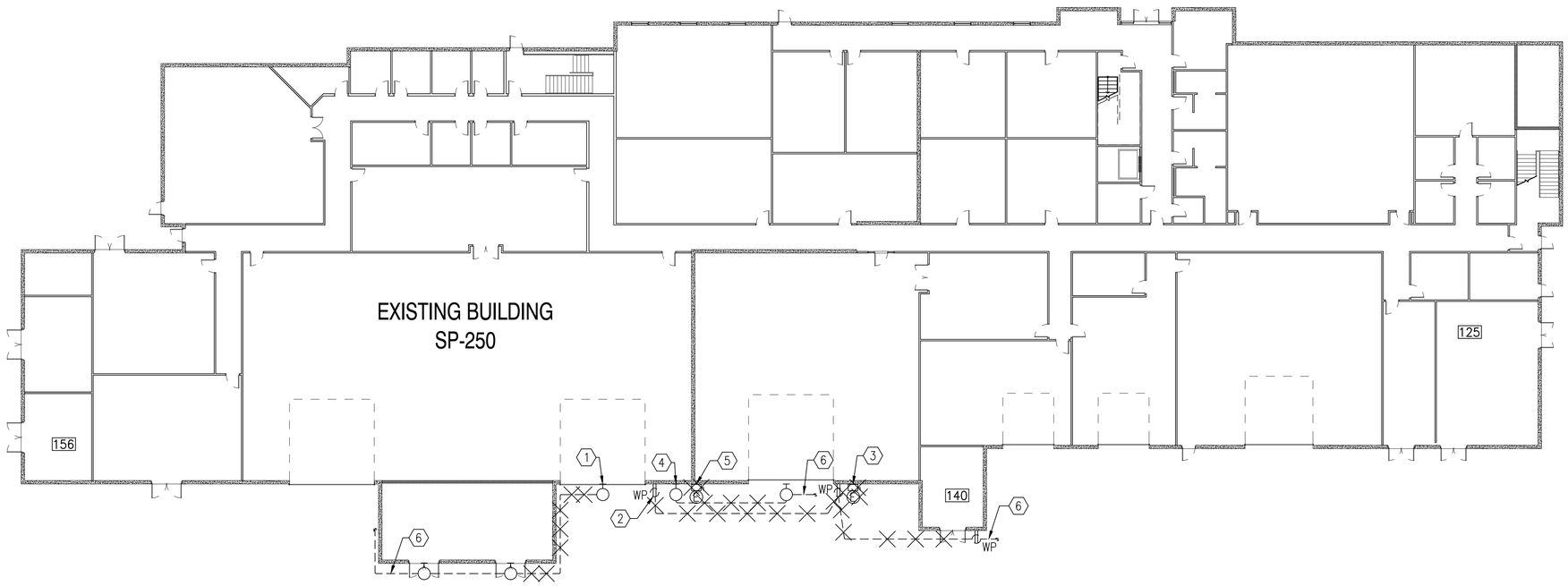

ELECTRICAL - DEMOLITION PLAN

SCALE: 1/16" = 1'-0"

PLAN NORTH

DEMOLITION KEYNOTES

1. REMOVE EXISTING WALL MOUNT LIGHTING FIXTURES INCLUDING WIRING AND CONDUIT INDICATED BY X MARK. LIGHTING CIRCUIT H1LW-16 LOCATED IN PANEL BOARD H1LW IN ROOM 156
2. REMOVE EXISTING WEATHERPROOF RECEPTACLES, INCLUDING WIRING AND CONDUIT WHERE INDICATED X MARK. CIRCUIT L1A-8, PANELBOARD L1A LOCATED IN ROOM 125.
3. OUTDOOR COCKPIT AC UNIT, DISCONNECT POWER, REMOVE 30A/3P DISCONNECT SWITCH, ELECTRICAL FEEDER FROM THE UNIT, INCLUDING ASSOCIATED DEVICES WIRING AND CONDUIT BACK TO PANELBOARD L1V, CIRCUIT L1V-38 LOCATED IN ROOM 125.
4. REMOVE EXISTING WALL MOUNT LIGHTING FIXTURES INCLUDING WIRING AND CONDUIT INDICATED WITH X MARK. LIGHTING CIRCUIT H1L-25, PANELBOARD H1L LOCATED IN ROOM 125
5. OUTDOOR COCKPIT AC UNIT, DISCONNECT POWER, REMOVE 30A/3P DISCONNECT SWITCH, ELECTRICAL FEEDER FROM THE UNIT, INCLUDING ASSOCIATED DEVICES WIRING AND CONDUIT BACK TO PANELBOARD L1BW, CIRCUIT L1BW-38 LOCATE IN ROOM 156.
6. DASHED LINES INDICATE EXISTING CIRCUITS TO REMAIN.

GRAPHIC SCALE

1/16"=1'-0" 0' 8' 16' 32'

SYM	DESCRIPTION	DATE	APPR

NAVFAC

SEAL

A/E INFO

APPROVED

FOR COMMANDER NAVFAC

ACTIVITY

SATISFACTORY TO DATE

DES HKL DRW HKL CHK KDL

PM/DM M. PERRY/L. SANDERS

BRANCH MANAGER KDL

CHIEF ENG/ARCH RW

FIRE PROTECTION

DEPARTMENT OF THE NAVY
NAVAL FACILITIES ENGINEERING COMMAND
HAMPTON ROADS IPT

NAVAL FACILITIES ENGINEERING COMMAND
NAVAL STATION - NORFOLK, VIRGINIA

NAVAL STATION NORFOLK
NORFOLK, VIRGINIA

FY 2016 P-518
MH-60 AVET TRAINING FACILITY

ELECTRICAL - DEMOLITION PLAN

SCALE: AS NOTED

EPROJECT NO.: 1291639

CONSTR. CONTR. NO.

NAVFAC DRAWING NO.
12701690

SHEET 93 OF 109

ED101

DRAWFORM REVISION: 10 MARCH 2009

FILE NAME: P:\VA\NavalStationNorfolk\MILCON\2016_1291639_P-518_DRB_MH-60 AVET Training Facility\B_Design\Drawings\Sheet Files\14_Electrical\1291639_ED101.dwg LAYOUT NAME: ED101 PLOTTED: Wednesday, November 04, 2015 - 9:08am USER: hien.tom

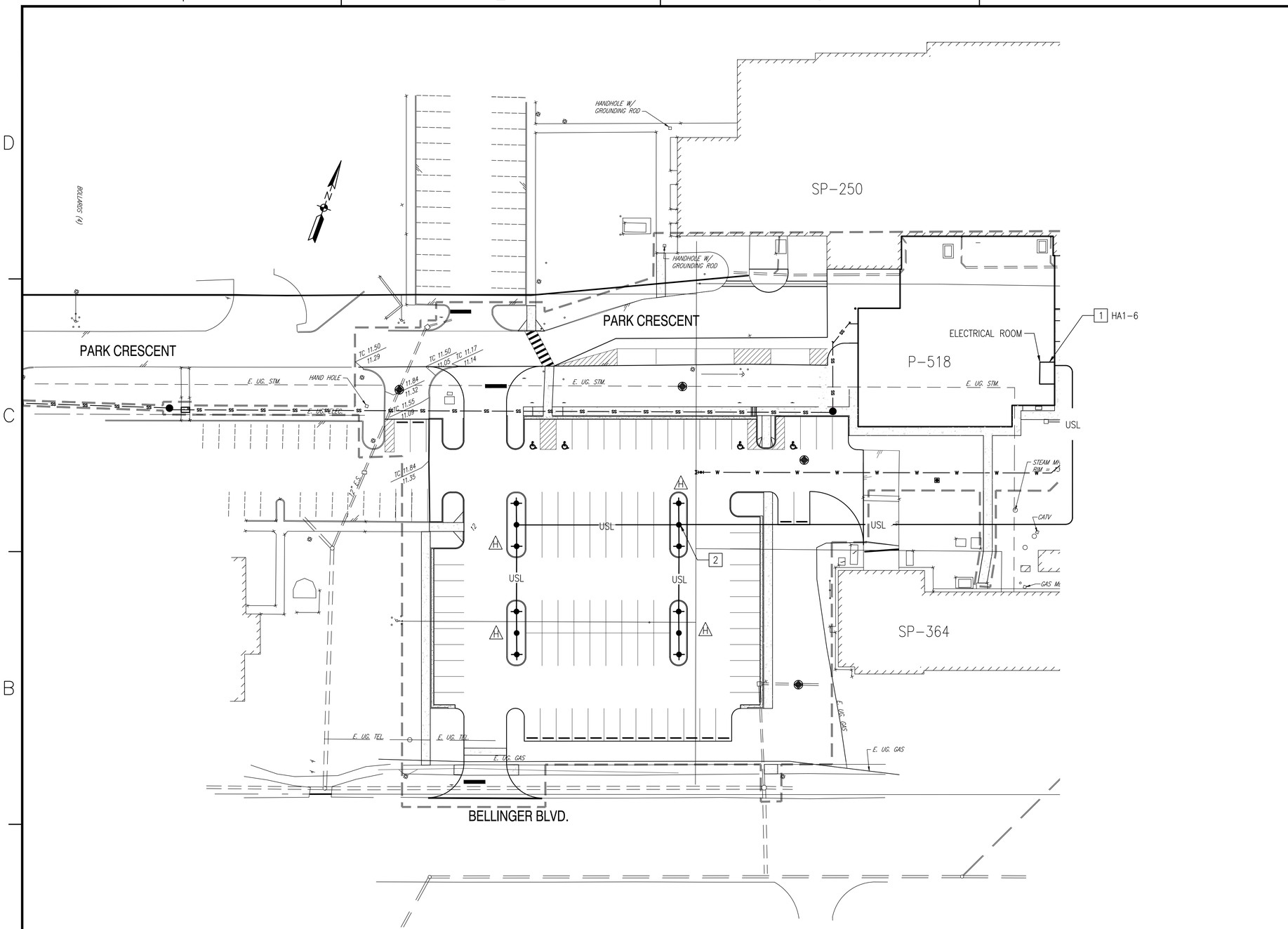

ELECTRICAL SITE PLAN - LIGHTING

SCALE: 1" = 30'

NEW WORK KEYNOTES

1. PARKING LOT LIGHT CIRCUIT, SEE PANELBOARD HA1 SCHEDULE ON E-604 FOR LIGHTING CIRCUIT CONNECTION
2. PHOTOCELL MOUNT ON POLE

1" = 30' 0 15' 30' 60'

SYM	DESCRIPTION	DATE	APPR

SEAL

A/E INFO

APPROVED

FOR COMMANDER NAVFAC

ACTIVITY

SATISFACTORY TO DATE

DES HKL DFW HKL CHK KDL

PM/DM M. PERRY/L. SANDERS

BRANCH MANAGER KDL

CHIEF ENG/ARCH RW

FIRE PROTECTION

DEPARTMENT OF THE NAVY
NAVAL FACILITIES ENGINEERING COMMAND
HAMPTON ROADS IPT

NAVAL FACILITIES ENGINEERING COMMAND - MIDATLANTIC
NAVAL STATION - NORFOLK, VIRGINIA

NAVAL STATION NORFOLK
NORFOLK, VIRGINIA

FY 2016 P-518
MH-60 AVET TRAINING FACILITY

ELECTRICAL SITE PLAN - LIGHTING

SCALE: AS NOTED

EPROJECT NO.: 1291639

CONSTR. CONTR. NO.

NAVFAC DRAWING NO.
12701691

SHEET 94 OF 109

ES101

DRAWFORM REVISION: 10 MARCH 2009

FILE NAME: P:\VA\NavalStationNorfolk\MILCON\2016_1291639_P-518_DBB_MH-60 AVET Training Facility\B_Design\Drawings\Sheet Files\14_Electrical\1291639_ES101.dwg LAYOUT NAME: ES101 PLOTTED: Wednesday, November 04, 2015 - 9:14am USER: hien.bom

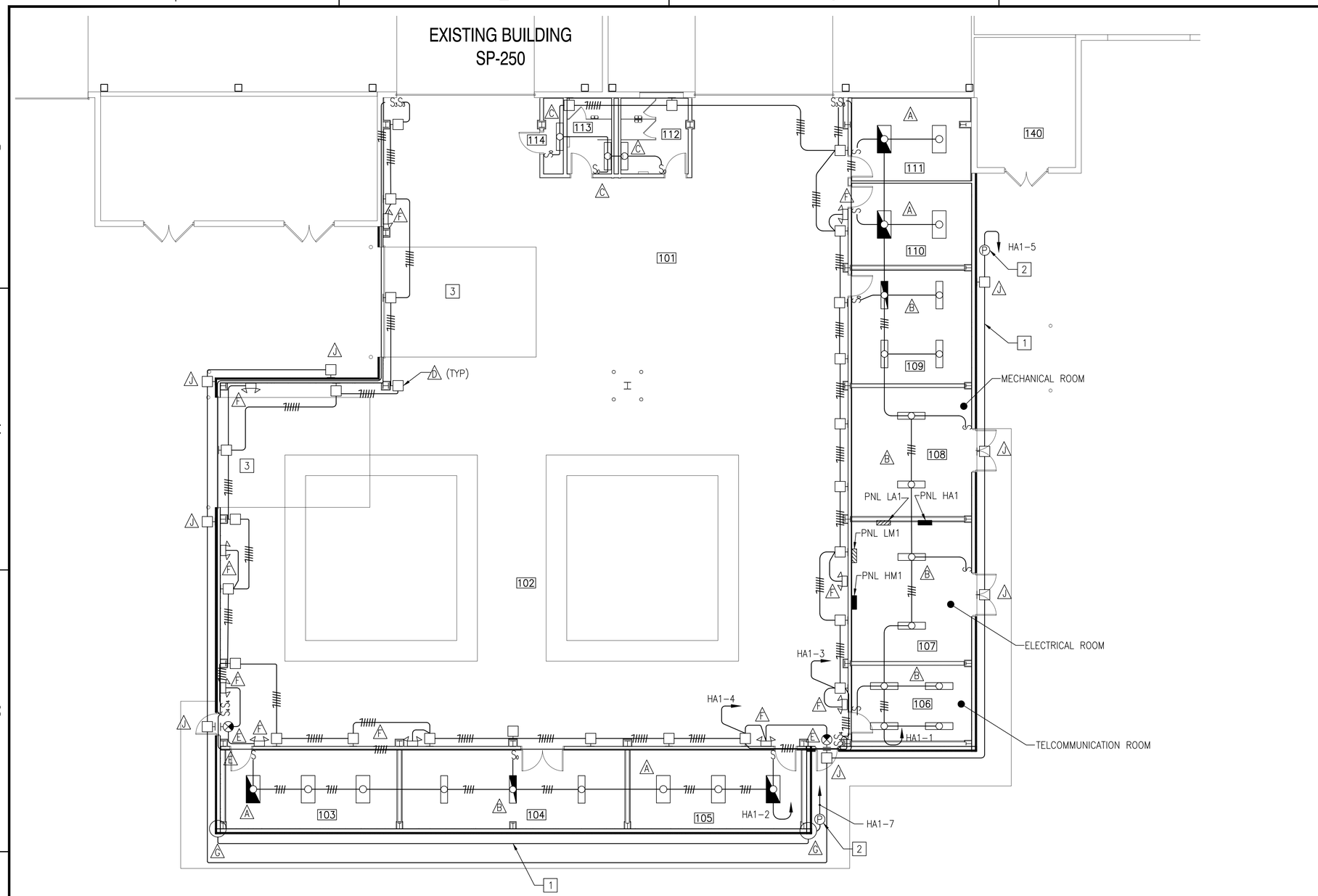

BUILDING ADDITION LIGHTING PLAN 1

SCALE: 1/8" = 1'-0"

PLAN NORTH

NEW WORK KEYNOTES

1. EXTERIOR LIGHTING CIRCUIT CONDUITS ROUTING SHOWN ARE FOR CLARIFICATION ONLY, ACTUAL CONDUIT RUN SHALL RECESS INTO WALL.
2. LIGHTING FIXTURE G IS LOCATED ON ROOF, PHOTOCELL MOUNT ON ROOF FACE NORTH.
3. MOUNT LIGHTING FIXTURE 5' ABOVE ROLL UP DOOR.

GRAPHIC SCALE

1/8"=1'-0" 0' 4' 8' 16'

SYM	DESCRIPTION	DATE	APPR

NAVFAC

SEAL

A/E INFO

APPROVED

FOR COMMANDER NAVFAC

ACTIVITY

SATISFACTORY TO DATE

DES HKL DRW HKL CHK KDL

PM/DM M. PERRY/L. SANDERS

BRANCH MANAGER KDL

CHIEF ENG/ARCH RW

FIRE PROTECTION

DEPARTMENT OF THE NAVY
NAVAL FACILITIES ENGINEERING COMMAND
HAMPTON ROADS IPT

NAVAL FACILITIES ENGINEERING COMMAND - MIDATLANTIC
NAVAL STATION - NORFOLK, VIRGINIA

NAVAL STATION NORFOLK
NORFOLK, VIRGINIA

FY 2016 P-518
MH-60 AVET TRAINING FACILITY

BUILDING ADDITION LIGHTING PLAN

SCALE: AS NOTED

EPROJECT NO.: 1291639

CONSTR. CONTR. NO.

NAVFAC DRAWING NO.
12701692

SHEET 95 OF 109

E-101

DRAWFORM REVISION: 10 MARCH 2009

FILE NAME: P:\VA\NavalStationNorfolk\MILCON\2016_1291639_P-518_DBB_MH-60 AVET Training Facility\B_Design\Drawings\Sheet Files\14_Electrical\1291639_E101.dwg LAYOUT NAME: E-101 PLOTTED: Wednesday, November 04, 2015 - 9:05am USER: hien.lam

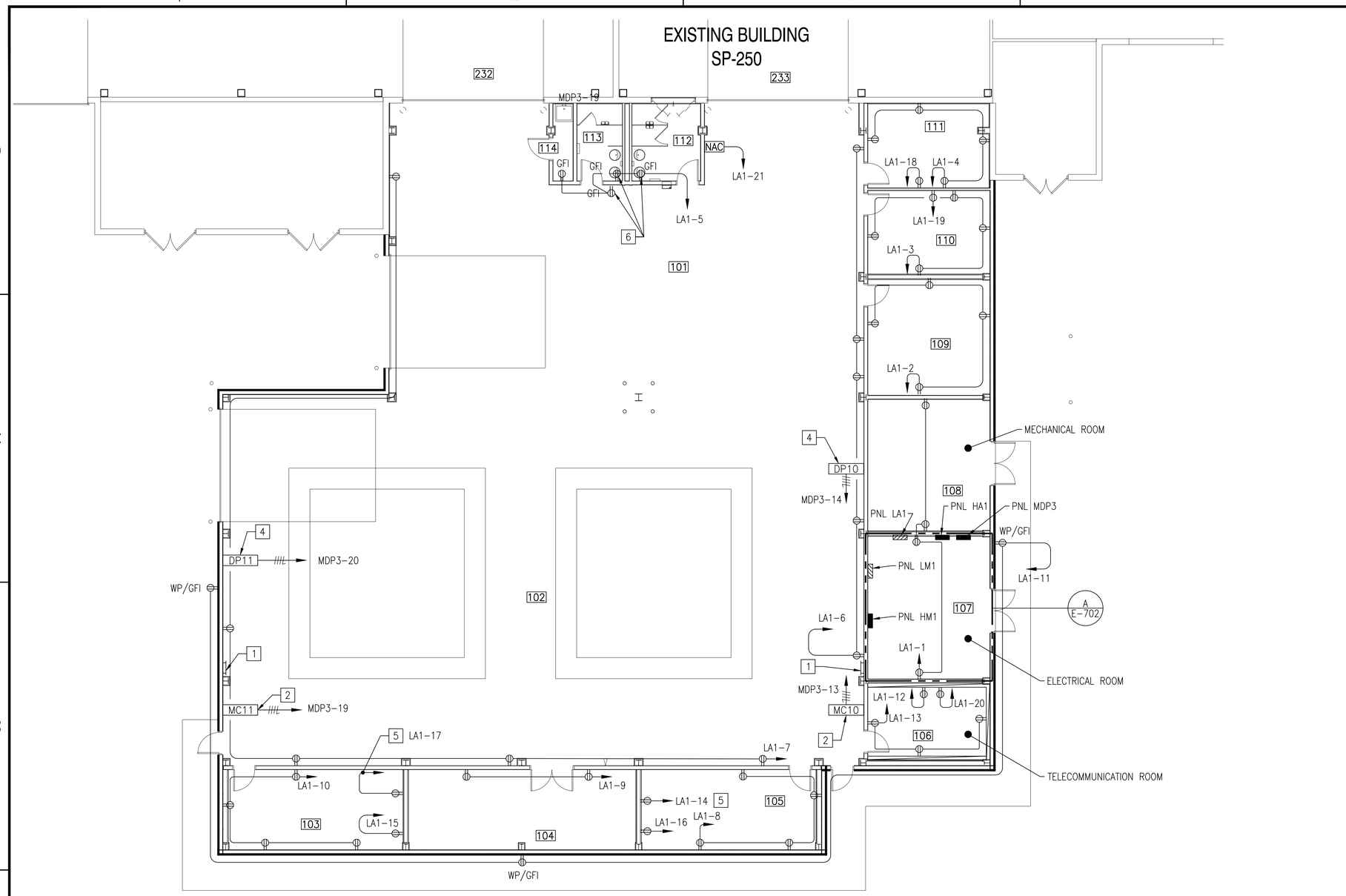

BUILDING ADDITION POWER PLAN

SCALE: 1/8" = 1'-0"

PLAN NORTH

NEW WORK KEYNOTES

1. EQUIPMENT GROUNDING BUS BAR 2" X 12". SEE G2 DETAIL ON SHEET E-502.
2. ENCLOSED CIRCUIT BREAKER 480V, 3 PHASE WITH SHUNT TRIP VIA CONNECT TO SPRINKLER SENSOR SWITCH. SEE FIRE ALARM DRAWINGS FOR SPRINKLER SENSOR SWITCH CONNECTION. SEE E-601 POWER RISER DIAGRAM FOR DETAIL.
3. FIRE ALARM "NAC" BOX. SEE FIRE ALARM DRAWINGS FOR JUNCTION BOX AND CONDUIT ROUGH-IN.
4. ENCLOSED CIRCUIT BREAKER 208V, 3 PHASE WITH SHUNT TRIP. SEE E-601 POWER RISER DIAGRAM FOR DETAIL.
5. MOUNT RECEPTACLE 5' AFF, COORDINATE WITH INTERIOR DRAWINGS FOR SMARTBOARD LOCATION PRIOR ROUGH-IN
6. WALL MOUNT 6" ABOVE BACKLASH

GRAPHIC SCALE

1/8"=1'-0" 0' 4' 8' 16'

SYM	DESCRIPTION	DATE	APPR

NAVFAC

SEAL

A/E INFO

APPROVED

FOR COMMANDER NAVFAC

ACTIVITY

SATISFACTORY TO DATE

DES HKL DRW HKL CHK KDL

PM/DM M. PERRY/L. SANDERS

BRANCH MANAGER KDL

CHIEF ENG/ARCH RW

FIRE PROTECTION

DEPARTMENT OF THE NAVY
NAVAL FACILITIES ENGINEERING COMMAND - MIDATLANTIC
HAMPTON ROADS IPT
NAVAL STATION NORFOLK

NAVAL FACILITIES ENGINEERING COMMAND
NAVAL STATION - NORFOLK, VIRGINIA
NORFOLK, VIRGINIA

FY 2016 P-518
MH-60 AVET TRAINING FACILITY

BUILDING ADDITION POWER PLAN

SCALE: AS NOTED

EPROJECT NO.: 1291639

CONSTR. CONTR. NO.

NAVFAC DRAWING NO. 12701693

SHEET 96 OF 109

E-102

DRAWFORM REVISION: 10 MARCH 2009

FILE NAME: P:\PA\NavalStationNorfolk\MILCON\2016_1291639_P-518_DBB_MH-60 AVET Training Facility\B_Design\Drawings\Sheet Files\14_Electrical\1291639_E102.dwg LAYOUT NAME: E-102 PLOTTED: Wednesday, November 04, 2015 - 9:04am USER: hien.lam

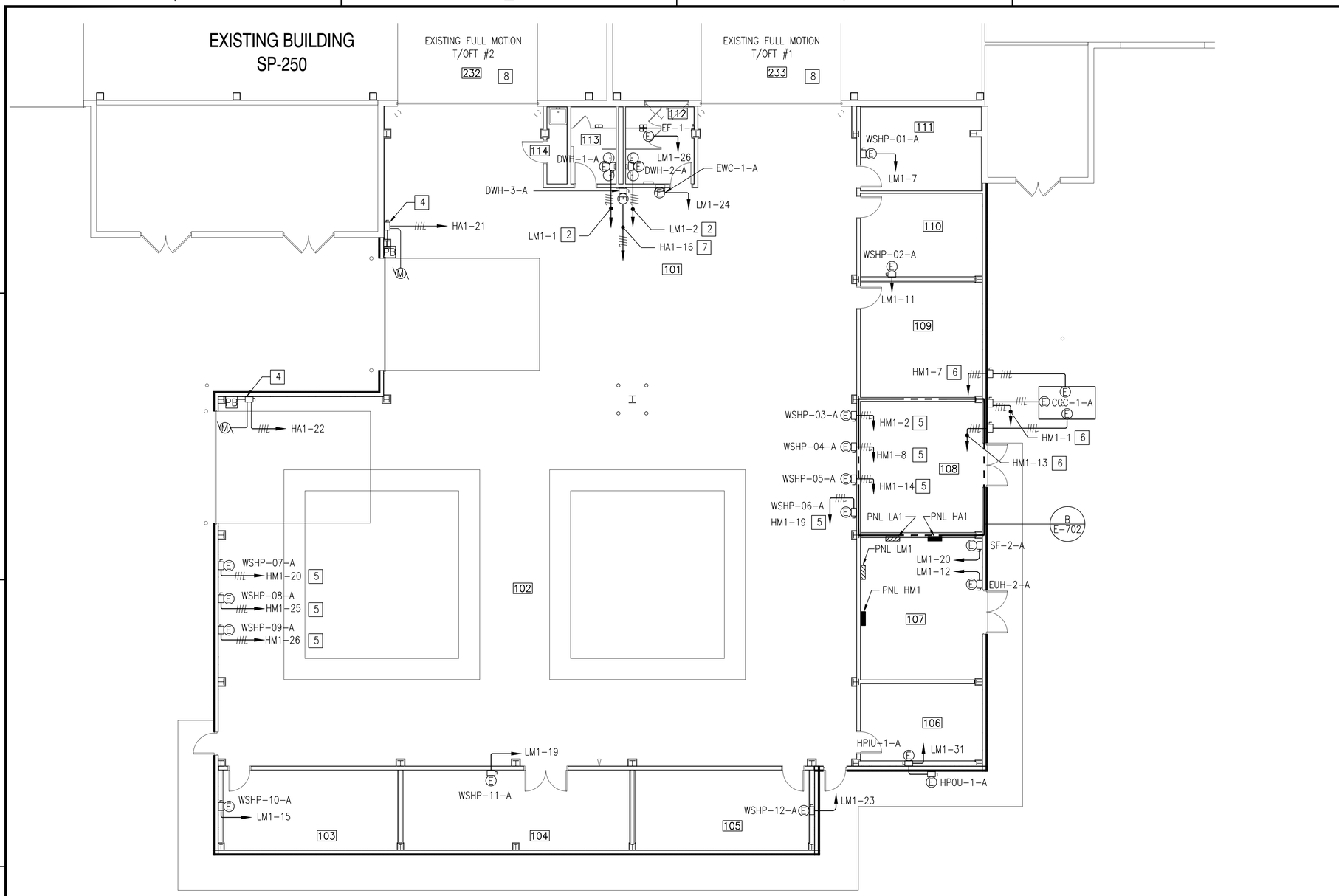

BUILDING ADDITION POWER MECHANICAL EQUIPMENT PLAN

SCALE: 1/8" = 1'-0"

1 3 8

PLAN NORTH

NEW WORK KEYNOTES

1. SEE MECHANICAL DRAWINGS PACKAGE FOR EQUIPMENT SCHEDULES, LOCATION AND EQUIPMENT DESCRIPTIONS
2. DWH-1-A AND DWH-2-A, THREE #8 AND ONE #12 GROUND IN 3/4" EACH. DISCONNECT SWITCH 30A-3P/NF 240VAC RATED EACH.
3. ALL DISCONNECT SWITCHES ARE 3P-30/NF, 240VAC UNLESS INDICATED OTHERWISE.
4. ROLL-UP DOOR AND PUSH-BUTTON CONTROL. SEE D3 AND R1 DETAILS ON E-501 & E-502. DISCONNECT SWITCH 30-3P/NF, 480VAC RATED EACH.
5. WSHP-03-A THRU WSHP-09-A, DISCONNECT SWITCH 30A-3P/NF, 480VAC RATED EACH.
6. CCC-1-A, PUMP AND HEATER, DISCONNECT SWITCH 30A-3P/NF, 480VAC RATED EACH.
7. DWH-3-A, THREE #10 AND ONE #12 GROUND IN 3/4" CONDUIT. DISCONNECT SWITCH 30A-3P/NF 480VAC RATED.
8. SEE E-501 "EXISTING FULL MOTION T/OFT ROOM 232 AND ROOM 233 – EQUIPMENT" FOR NEW PORTABLE A/C UNITS CONNECTION. SEE MECHANICAL DRAWINGS FOR EQUIPMENTS LOCATIONS

GRAPHIC SCALE

1/8"=1'-0" 0' 4' 8' 16'

SYM	DESCRIPTION	DATE	APPR

NAVFAC

SEAL

A/E INFO

APPROVED

FOR COMMANDER NAVFAC

ACTIVITY

SATISFACTORY TO DATE

DES HKL DRW HKL CHK KDL

PM/DM M. PERRY/L. SANDERS

BRANCH MANAGER KDL

CHIEF ENG/ARCH RW

FIRE PROTECTION

DEPARTMENT OF THE NAVY
NAVAL FACILITIES ENGINEERING COMMAND
HAMPTON ROADS IPT

NAVAL FACILITIES ENGINEERING COMMAND - MIDATLANTIC
NAVAL STATION – NORFOLK, VIRGINIA

NAVAL STATION NORFOLK
NORFOLK, VIRGINIA

FY 2016 P-518
MH-60 AVET TRAINING FACILITY

BUILDING ADDITION POWER MECHANICAL EQUIPMENT PLAN

SCALE: AS NOTED

EPROJECT NO.: 1291639

CONSTR. CONTR. NO.

NAVFAC DRAWING NO. 12701694

SHEET 97 OF 109

E-103

DRAWFORM REVISION: 10 MARCH 2009

FILE NAME: P:\VA\NavalStationNorfolk\MILCON\2016_1291639_P-518_DBB_MH-60 AVET Training Facility\BI_Design\Drawings\Sheet Files\14_Electrical\1291639_E103.dwg LAYOUT NAME: E-103 PLOTTED: Wednesday, November 04, 2015 - 9:03am USER: hien.lam

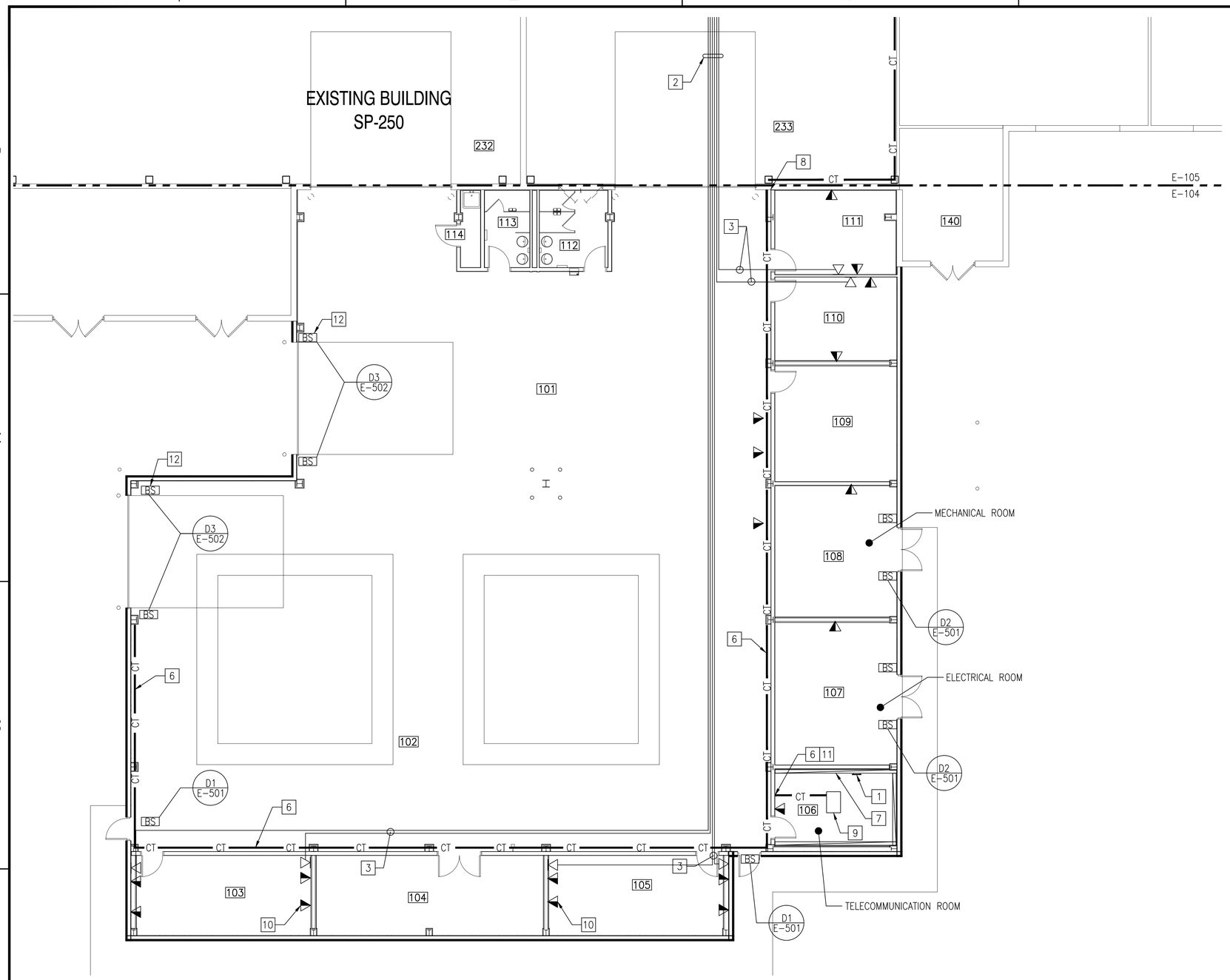

BUILDING ADDITION COMMUNICATION AND SECURITY PLAN

SCALE: 1/8" = 1'-0"

PLAN NORTH

NEW WORK KEYNOTES

1. TELECOMMUNICATION BONDING BUS BAR 4" X 12" WALL MOUNT 18" AFF. SEE E-602 TELECOMMUNICATION BONDING BUS BAR DETAIL.
2. CONDUIT RUN ABOVE CEILING TO CORRIDOR #117. SEE E-105 FOR JUNCTION BOX AND CONDUIT PATH WAY.
3. SIPRNET OUTLET 1-4 PAIR CAT 6 CABLE IN 1" CONDUIT. SEE "SIPRNET OUTLET DETAIL" ON E-602.
4. FOR TELEPHONE SERVICE CONNECTION CONTACT LERMAR BLOUNT AT 757-443-9081 OR BY EMAIL lemar.blount@navy.mil
5. FOR COMPUTER NMCI CONNECTION CONTACT BRAIN NEGEL AT 757-440-5491 OR VIA BY EMAIL brian.negle@nmci-isf.com
6. CABLE TRAY 12" X 4" WIRE BASKET WALL MOUNT 12' AFF, INCLUDING MOUNTING SUPPORT.
7. MOUNT 3/4" THICK PLYWOOD ON THREE WALLS AND PAINT WITH FIRE RESISTANCE PAINT
8. CABLE TRAY END AT WALL. PROVIDE 3-4" SLEEVES WITH PLASTICS BUSHING TO ACCOMMODATE CABLE ROUT THRU WALL. SEE E-105 FOR CONTINUATION.
9. FREE STAND EQUIPMENT RACK FOR VOICE AND DATA PATCH PANELS
10. MOUNT TELECOMMUNICATION OUTLET 5' AFF, COORDINATE WITH INTERIOR DRAWINGS FOR LOCATION PRIOR ROUGH-IN
11. CABLE TRAY END AT WALL. PROVIDE 3-4" SLEEVES WITH PLASTICS BUSHING TO ACCOMMODATE CABLE ROUT THRU WALL.
12. REUSE BALANCE MAGNETIC DOOR SWITCHES FROM EXISTING ROLL UP DOORS FROM ROOM 232 & 233 TO NEW BUILDING ADDITION AS SHOW ON PLAN. MATCH EXISTING CONDUIT AND WIRE AND EXTEND TO NEW LOCATIONS AS REQUIRE. SEE SECURITY SYSTEM RISER DIAGRAM ON E-603.

GRAPHIC SCALE

1/8"=1'-0" 0' 4' 8' 16'

SYM	DESCRIPTION	DATE	APPR

NAVFAC

SEAL

A/E INFO

APPROVED

FOR COMMANDER NAVFAC

ACTIVITY

SATISFACTORY TO DATE

DES HKL DRW HKL CHK KDL

PM/DM M. PERRY/L. SANDERS

BRANCH MANAGER KDL

CHIEF ENG/ARCH RW

FIRE PROTECTION

DEPARTMENT OF THE NAVY
NAVAL FACILITIES ENGINEERING COMMAND
HAMPTON ROADS IPT
NAVAL FACILITIES ENGINEERING COMMAND - MIDATLANTIC
NAVAL STATION - NORFOLK, VIRGINIA
NAVAL STATION NORFOLK
NORFOLK, VIRGINIA

FY 2016 P-518
MH-60 AVET TRAINING FACILITY

BUILDING ADDITION COMMUNICATION AND SECURITY PLAN

SCALE: AS NOTED

EPROJECT NO.: 1291639

CONSTR. CONTR. NO.

NAVFAC DRAWING NO. 12701695

SHEET 98 OF 109

E-104

DRAWFORM REVISION: 10 MARCH 2009

FILE NAME: P:\VA\NavalStationNorfolk\MLCON\2016_1291639_P-518_DBB_MH-60 AVET Training Facility\B_Design\Drawings\Sheet Files\14_Electrical\1291639_E104.dwg LAYOUT NAME: E-104 PLOTTED: Wednesday, November 04, 2015 - 9:03am USER: hien.lam

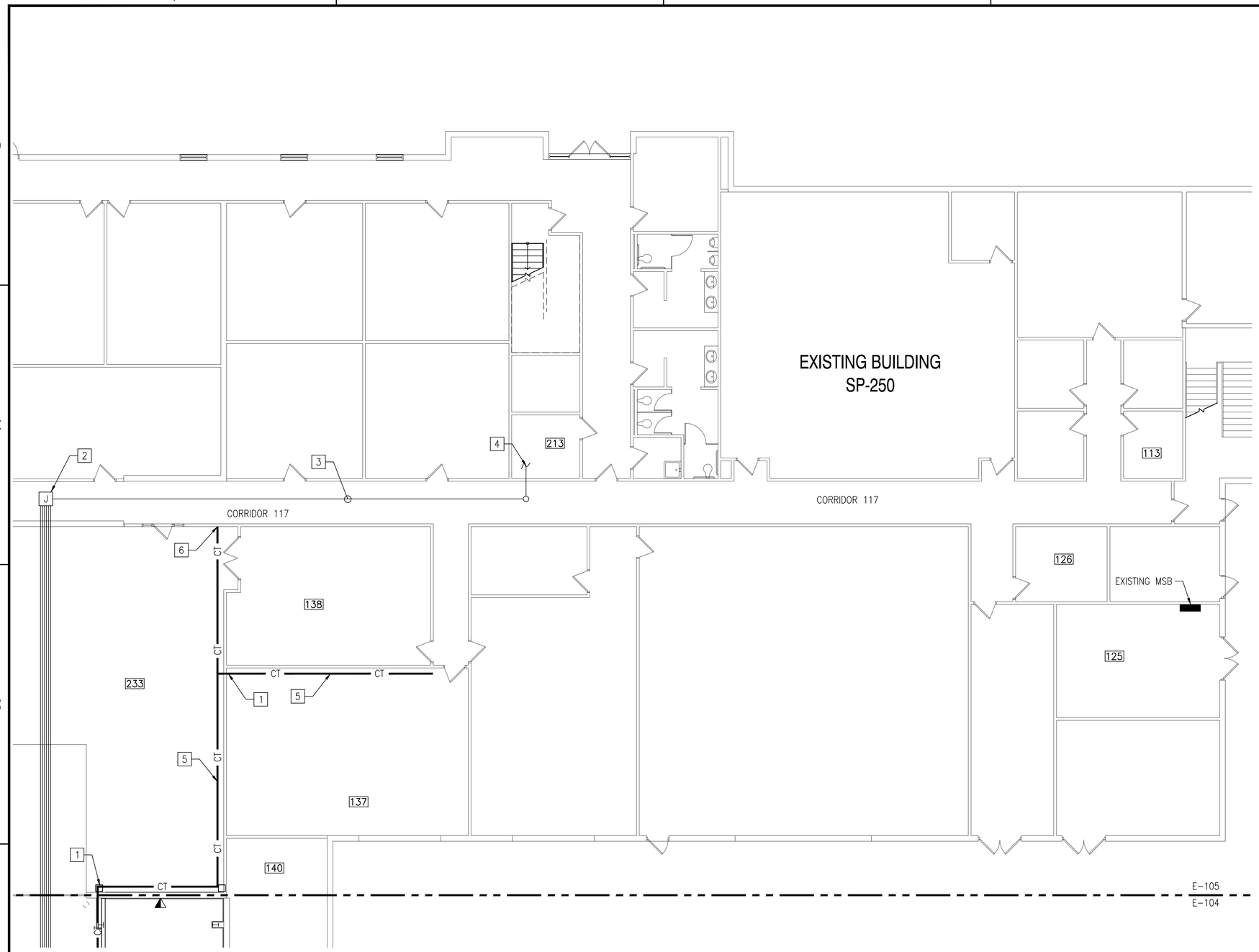

BUILDING ADDITION COMMUNICATION AND SECURITY PLAN

SCALE: 1/8" = 1'-0"

PLAN NORTH

NEW WORK KEYNOTES

1. CABLE TRAY END AT WALL. PROVIDE 3-4" SLEEVES WITH PLASTICS BUSHING TO ACCOMMODATE CABLE ROUTE THRU WALL. SEE E-104 FOR CONTINUATION.
2. JUNCTION BOX 12" X 12" LOCATE ABOVE CEILING AT CORRIDOR #117 SEE "VOICE AND DATA RISER DIAGRAM" ON E-602.
3. ROUTE 6-4 PAIR CAT 6 CABLE IN 4" CONDUIT TO SIPRNET SWITCH. ALL JUNCTION BOXES AND CONDUIT FITTINGS SHALL BE EPOXIED CLOSED.
4. ROOM 213 SHOWN LOCATED ON SECOND FLOOR CONTRACTOR SHALL VERIFY PRIOR ROUGH-IN CONDUIT ROUTING. FOR TERMINATION POINT COORDINATE WITH BRIAN NAGLE AT 757-440-5491 OR BY EMAIL brian.nagle@nmci-isf.com.
5. CABLE TRAY 12" X 4" WIRE BASKET WALL MOUNT 12' AFF, INCLUDING MOUNTING SUPPORT.
6. CABLE TRAY END AT WALL. PROVIDE 3-4" SLEEVES WITH PLASTICS BUSHING TO ACCOMMODATE CABLE ROUT THRU WALL. CONNECTING TO EXISTING CABLE TRAY LOCATED ABOVE CEILING OF CORRIDOR 117.

GRAPHIC SCALE

1/8"=1'-0" 0' 4' 8' 16'

SYM	DESCRIPTION	DATE	APPR

SEAL

A/E INFO

APPROVED

FOR COMMANDER NAVFAC

ACTIVITY

SATISFACTORY TO DATE

DES HKL DRW HKL CHK KDL

PM/DM M. PERRY/L. SANDERS

BRANCH MANAGER KDL

CHIEF ENG/ARCH RW

FIRE PROTECTION

DEPARTMENT OF THE NAVY
NAVAL FACILITIES ENGINEERING COMMAND
NAVAL FACILITIES ENGINEERING COMMAND - MIDATLANTIC
HAMPTON ROADS IPT
NAVAL STATION – NORFOLK, VIRGINIA
NAVAL STATION NORFOLK
NORFOLK, VIRGINIA

FY 2016 P-518
MH-60 AVET TRAINING FACILITY

BUILDING ADDITION COMMUNICATION AND SECURITY PLAN

SCALE: AS NOTED

EPROJECT NO.: 1291639

CONSTR. CONTR. NO.

NAVFAC DRAWING NO. 12701696

SHEET 99 OF 109

E-105

DRAWFORM REVISION: 10 MARCH 2009

FILE NAME: P:\VA\NavalStationNorfolk\MILCON\2016_1291639_P-518_DBB_MH-60 AVET Training Facility\B_Design\Drawings\Sheet Files\14_Electrical\1291639_E105.dwg LAYOUT NAME: E-105 PLOTTED: Wednesday, November 04, 2015 - 9:02am USER: hien.lam

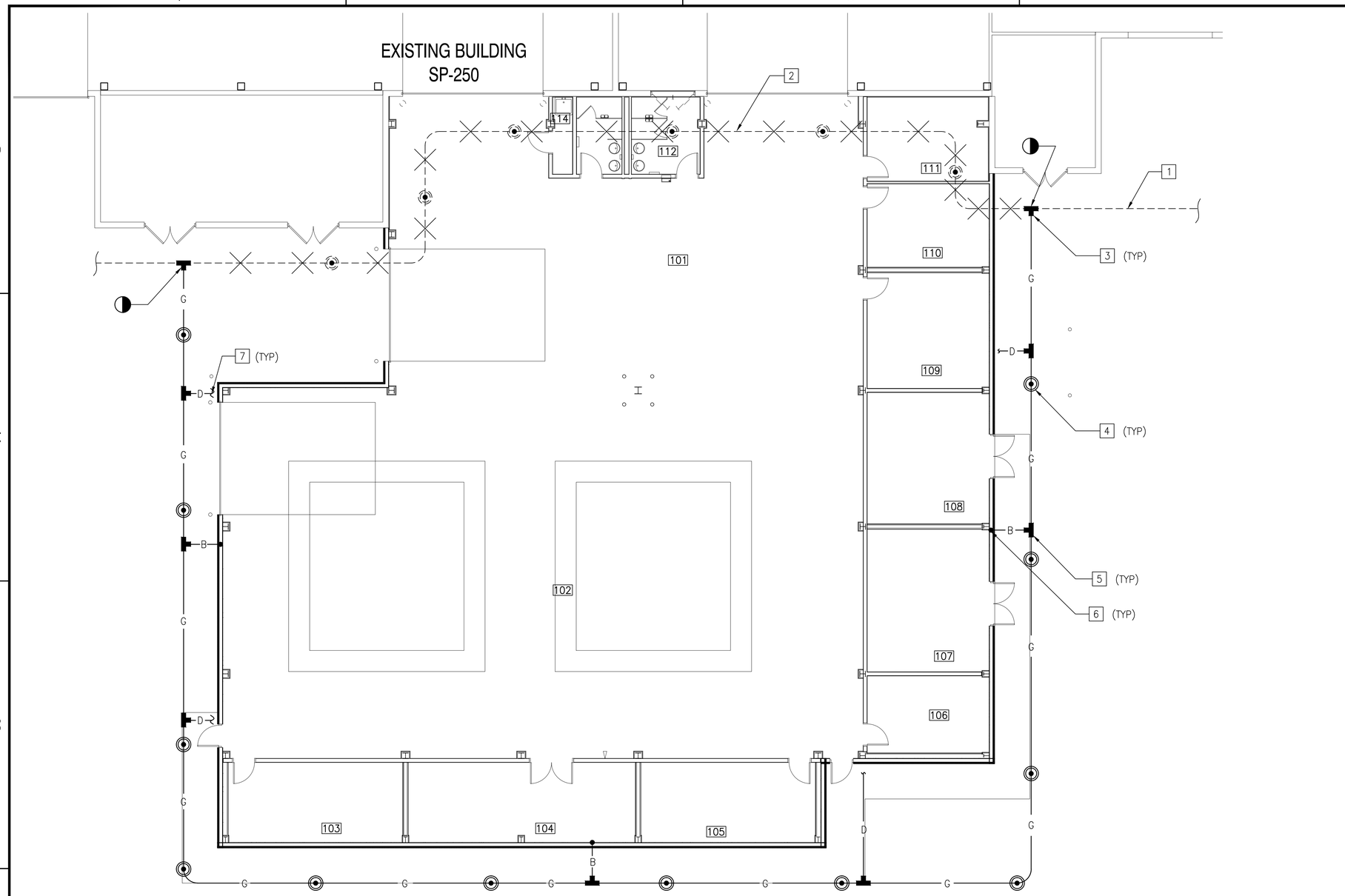

BUILDING ADDITION GROUNDING PLAN

SCALE: 1/8" = 1'-0"

PLAN NORTH

NEW WORK KEYNOTES

1. EXISTING BUILDING GROUNDING GRID TO REMAIN.
2. EXISTING BUILDING GROUNDING GRID WHERE CROSS HATCH X MARK SHOW SHALL BE REMOVED.
3. EXOTHERMIC WELDS BONDING TO EXISTING BUILDING GROUNDING GRID #4/0 BARE COPPER.
4. BUILDING GROUNDING RODS 3/4", 10' LONG. SEE G3 DETAIL ON E-502
5. EXOTHERMIC WELDS BONDING TO BUILDING GROUNDING GRID #4/0 BARE COPPER SEE G3 DETAIL ON E-502
6. EXOTHERMIC WELDS BONDING TO BUILDING STEEL STRUCTURE. SEE G1 DETAIL ON E-502
7. DOWN CONDUCTOR #4/0 FROM ROOF TOP, EXOTHERMIC WELDS BONDING TO BUILDING GROUNDING GRID. SEE G1 DETAIL ON E-502

GRAPHIC SCALE

1/8"=1'-0" 0' 4' 8' 16'

SYM	DESCRIPTION	DATE	APPR

NAVFAC

SEAL

A/E INFO

APPROVED

FOR COMMANDER NAVFAC

ACTIVITY

SATISFACTORY TO DATE

DES HKL DRW HKL CHK KDL

PM/DM M. PERRY/L. SANDERS

BRANCH MANAGER KDL

CHIEF ENG/ARCH RW

FIRE PROTECTION

DEPARTMENT OF THE NAVY
NAVAL FACILITIES ENGINEERING COMMAND
HAMPTON ROADS IPT
NAVAL FACILITIES ENGINEERING COMMAND - MIDATLANTIC
NAVAL STATION - NORFOLK, VIRGINIA
NAVAL STATION NORFOLK
NORFOLK, VIRGINIA

FY 2016 P-518
MH-60 AVET TRAINING FACILITY

BUILDING ADDITION GROUNDING PLAN

SCALE: AS NOTED

EPROJECT NO.: 1291639

CONSTR. CONTR. NO.

NAVFAC DRAWING NO. 12701697

SHEET 100 OF 109

E-106

DRAWFORM REVISION: 10 MARCH 2009

FILE NAME: P:\VA\NavalStationNorfolk\MILCON\2016_1291639_P-518_DBB_MH-60 AVET Training Facility\B_Design\Drawings\Sheet Files\14_Electrical\1291639_E106.dwg LAYOUT NAME: E-106 PLOTTED: Wednesday, November 04, 2015 - 9:02am USER: hien.lam

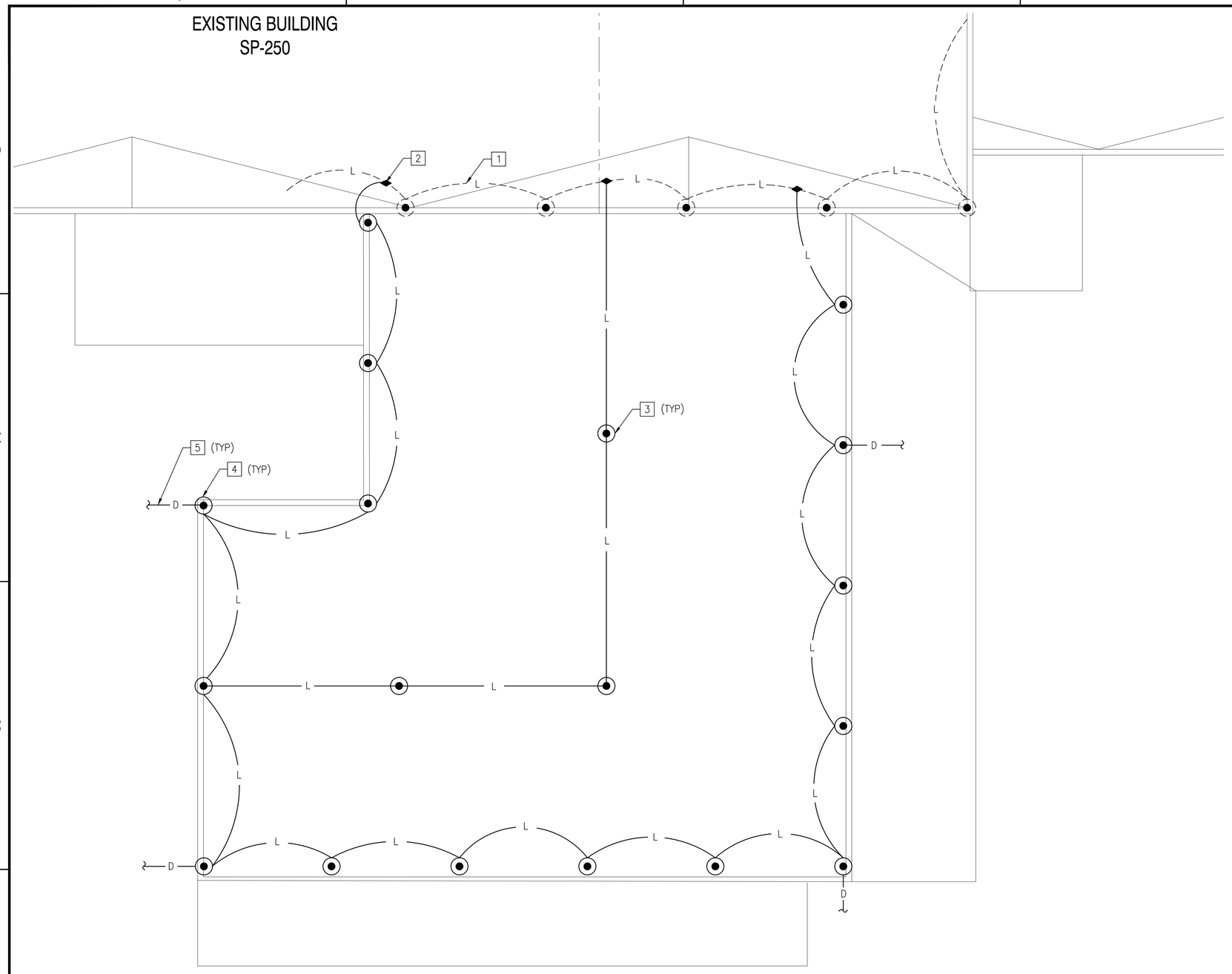

BUILDING ADDITION LIGHTNING PROTECTION ROOF PLAN

SCALE: 1/8" = 1'-0"

PLAN NORTH

NEW WORK KEYNOTES

1. EXISTING BUILDING LIGHTNING PROTECTION GRID TO REMAIN.
2. LIGHTNING PROTECTION SYSTEM BONDING BOLT CONNECTION. SEE G4 DETAIL ON E-502
3. BUILDING AIR TERMINAL AND BASE CONNECTION. SEE G6 DETAIL ON E-502
4. AIR TERMINAL AND BASE CONNECTION WITH DOWN CONDUCTOR CONNECT TO BUILDING GROUND GRID.
5. LIGHTNING DOWN CONDUCTOR ONE # 4/0 CONNECT TO BUILDING GROUND GRID. SEE BUILDING ADDITION GROUNDING PLAN ON E-106

GRAPHIC SCALE

1/8"=1'-0" 0' 4' 8' 16'

SYM	DESCRIPTION	DATE	APPR

NAVFAC

SEAL

A/E INFO

APPROVED

FOR COMMANDER NAVFAC

ACTIVITY

SATISFACTORY TO DATE

DES HKL DRW HKL CHK KDL

PM/DM M. PERRY/L. SANDERS

BRANCH MANAGER KDL

CHIEF ENG/ARCH RW

FIRE PROTECTION

DEPARTMENT OF THE NAVY
NAVAL FACILITIES ENGINEERING COMMAND
NAVAL FACILITIES ENGINEERING COMMAND - MIDATLANTIC
HAMPTON ROADS IPT
NAVAL STATION NORFOLK
NAVAL STATION – NORFOLK, VIRGINIA
NORFOLK, VIRGINIA

FY 2016 P-518
MH-60 AVET TRAINING FACILITY

BUILDING ADDITION LIGHTNING PROTECTION ROOF PLAN

SCALE: AS NOTED

EPROJECT NO.: 1291639

CONSTR. CONTR. NO.

NAVFAC DRAWING NO. 12701698

SHEET 101 OF 109

E-107

DRAWFORM REVISION: 10 MARCH 2009

FILE NAME: P:\VA\NavalStationNorfolk\MILCON\2016_1291639_P-518_DRB_MH-60 AVET Training Facility\B_Design\Drawings\Sheet Files\14_Electrical\1291639_E107.dwg LAYOUT NAME: E-107 PLOTTED: Wednesday, November 04, 2015 - 9:06am USER: hien.lam

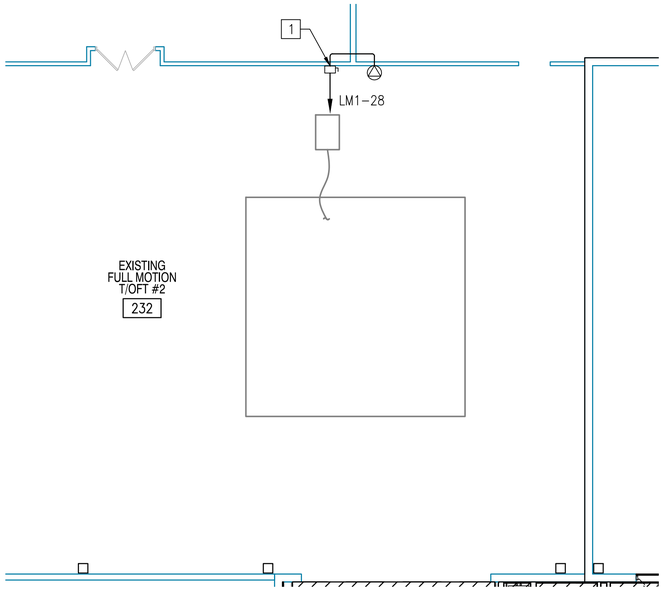

PLAN NORTH

EXISTING FULL MOTION T/OFT ROOM 232 - EQUIPMENT

SCALE: 1/8" = 1'0"

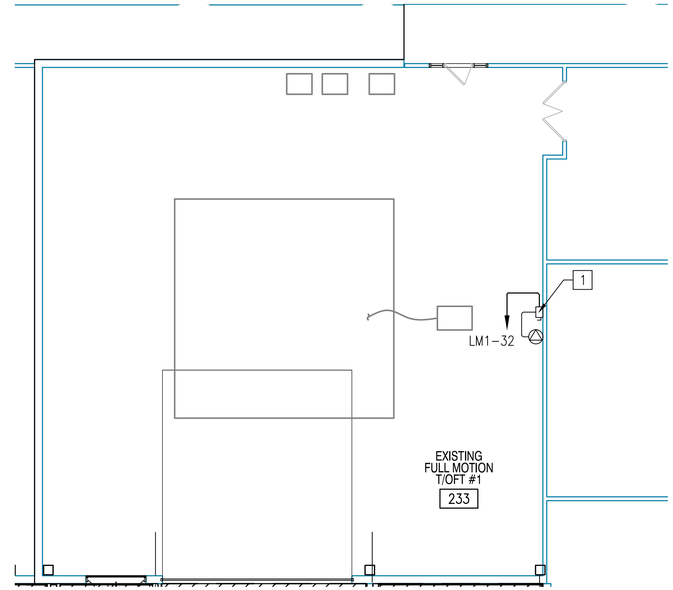

PLAN NORTH

EXISTING FULL MOTION T/OFT ROOM 233 - EQUIPMENT

SCALE: 1/8" = 1'0"

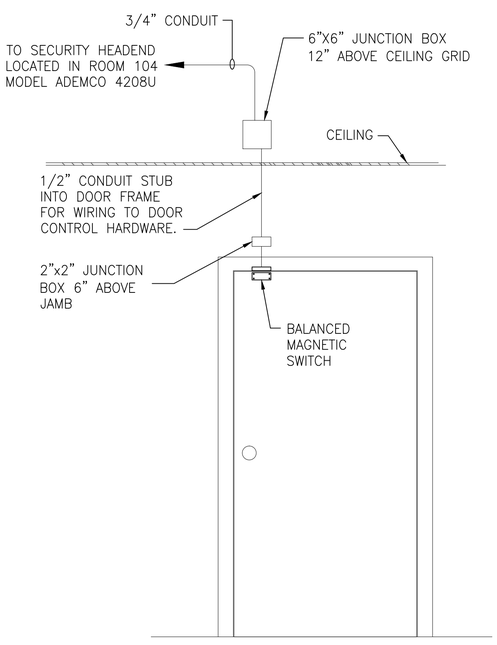

NOTE: DOORS SHALL BE COORDINATED WITH ARCHITECTURAL DOOR SCHEDULES FOR INSTALLATION

SINGLE DOOR WITH BALANCED MAGNETIC SWITCH (D1)

NTS

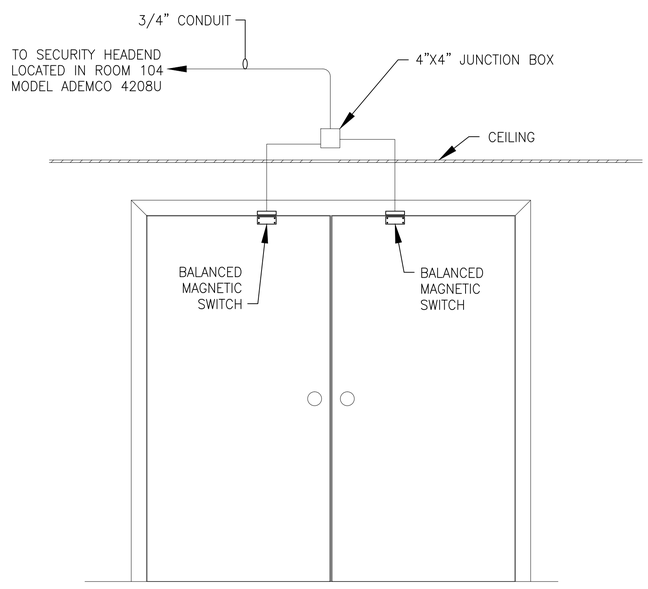

NOTE: DOORS SHALL BE COORDINATED WITH ARCHITECTURAL DOOR SCHEDULES FOR INSTALLATION

DOUBLE DOOR WITH BALANCED MAGNETIC SWITCH (D2)

NTS

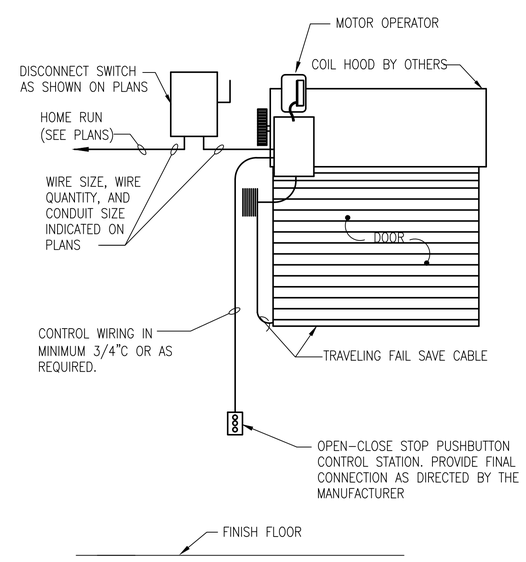

ROLL-UP CONNECTION DETAIL (R1)

NTS

GENERAL SHEET NOTES

1. SEE SHEET M-501 AND M-502 FOR DETAIL DRAWINGS.

NEW WORK KEYNOTES

1. PORTABLE A/C UNITS, 208V/1ø, DISCONNECT 30A-3P/30A FUSE, 240VAC RATED, PROVIDE NEMA 6-30 RECEPTACLE WALL MOUNT 18" AFF

GRAPHIC SCALE

1/8"=1'-0" 0' 4' 8' 16'

SYM	DESCRIPTION	DATE	APPR

NAVFAC

SEAL

A/E INFO

APPROVED

FOR COMMANDER NAVFAC

ACTIVITY

SATISFACTORY TO DATE

DES HKL DRW HKL CHK KDL

PM/DM M. PERRY/L. SANDERS

BRANCH MANAGER KDL

CHIEF ENG/ARCH RW

FIRE PROTECTION

DEPARTMENT OF THE NAVY
NAVAL FACILITIES ENGINEERING COMMAND
NAVAL FACILITIES ENGINEERING COMMAND - MIDATLANTIC
HAMPTON ROADS IPT
NAVAL STATION NORFOLK
NAVAL STATION - NORFOLK, VIRGINIA
NORFOLK, VIRGINIA

FY 2016 P-518
MH-60 AVET TRAINING FACILITY

DETAILS

SCALE: AS NOTED

EPROJECT NO.: 1291639

CONSTR. CONTR. NO.

NAVFAC DRAWING NO.
12701699

SHEET 102 OF 109

E-501

DRAWFORM REVISION: 10 MARCH 2009

FILE NAME: P:\VA\NavalStationNorfolk\MILCON\2016_1291639_P-518_DRB_MH-60 AVET Training Facility\B_Design\Drawings\Sheet Files\14_Electrical\1291639_E501.dwg LAYOUT NAME: E-501 PLOTTED: Wednesday, November 04, 2015 - 9:13am USER: hien.lam

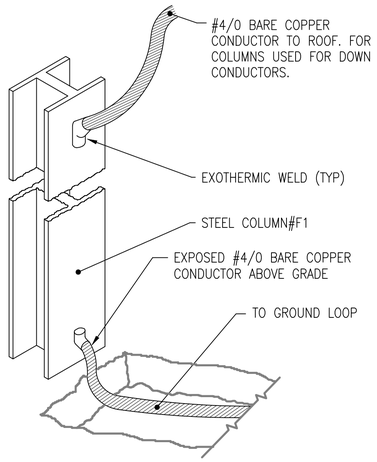

BUILDING STEEL BONDING CONNECTION DETAIL (G1)

NTS

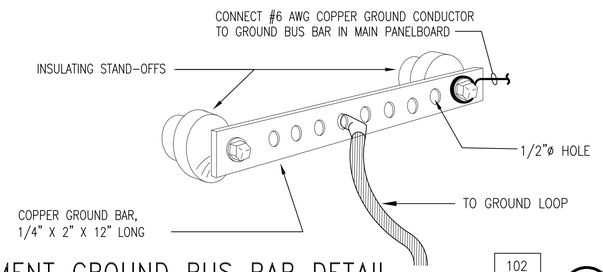

102

EQUIPMENT GROUND BUS BAR DETAIL (G2)

NTS

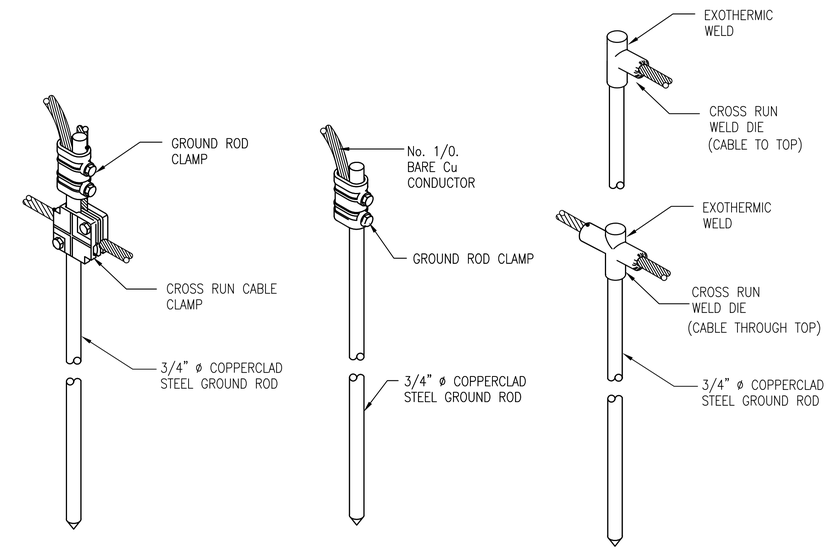

GROUND ROD CONNECTION DETAIL (G3)

NTS

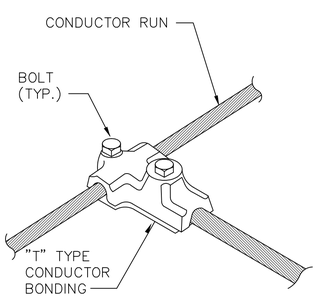

CABLE BONDING CONNECTION (G4)

NTS

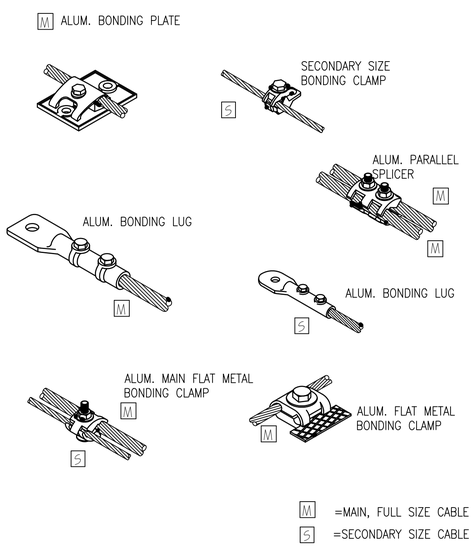

BONDING CONNECTION DETAILS (G5)

NTS

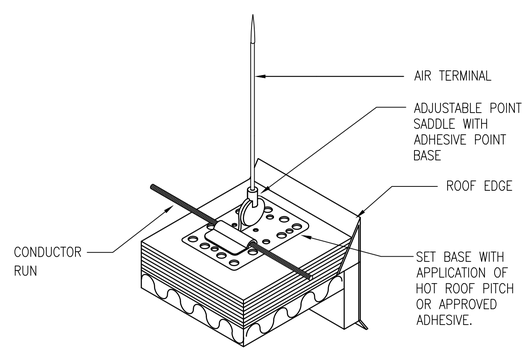

AIR TERMINAL AND BASE DETAIL (G6)

NTS

NOTES:
1. ADHERE BASE AND CONDUCTOR FASTENERS TO RIDGE CAP WITH CHEMLINK M-1 ADHESIVE AND BOND TO METAL ROOF PANELS.
2. ALIGN AIR TERMINAL PLUMB.

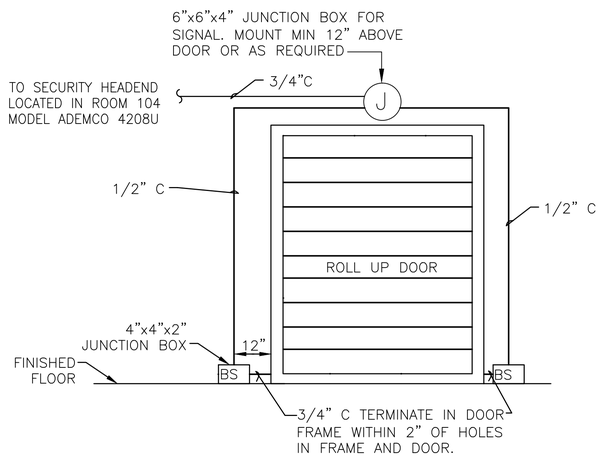

BALANCE MAGNETIC ROLL UP DOOR (D3)

NTS

SYM	DESCRIPTION	DATE	APPR

NAVFAC

SEAL

A/E INFO

APPROVED

FOR COMMANDER NAVFAC

ACTIVITY

SATISFACTORY TO DATE

DES HKL DRW HKL CHK KDL

PM/DM M. PERRY/L. SANDERS

BRANCH MANAGER KDL

CHIEF ENG/ARCH RW

FIRE PROTECTION

DEPARTMENT OF THE NAVY
NAVAL FACILITIES ENGINEERING COMMAND
NAVAL FACILITIES ENGINEERING COMMAND - MIDATLANTIC
NAVAL STATION NORFOLK
HAMPTON ROADS IPT
NAVAL STATION – NORFOLK, VIRGINIA
NORFOLK, VIRGINIA

FY 2016 P-518
MH-60 AVET TRAINING FACILITY

DETAILS

SCALE: AS NOTED

EPROJECT NO.: 1291639

CONSTR. CONTR. NO.

NAVFAC DRAWING NO.
12701700

SHEET 103 OF 109

E-502

DRAWFORM REVISION: 10 MARCH 2009

FILE NAME: P:\VA\NavalStationNorfolk\MLCON\2016_1291639_P-518_DBB_MH-60 AVET Training Facility\B_Design\Drawings\Sheet Files\14_Electrical\1291639_E502.dwg LAYOUT NAME: E-502 PLOTTED: Wednesday, November 04, 2015 - 9:13am USER: hien.lam

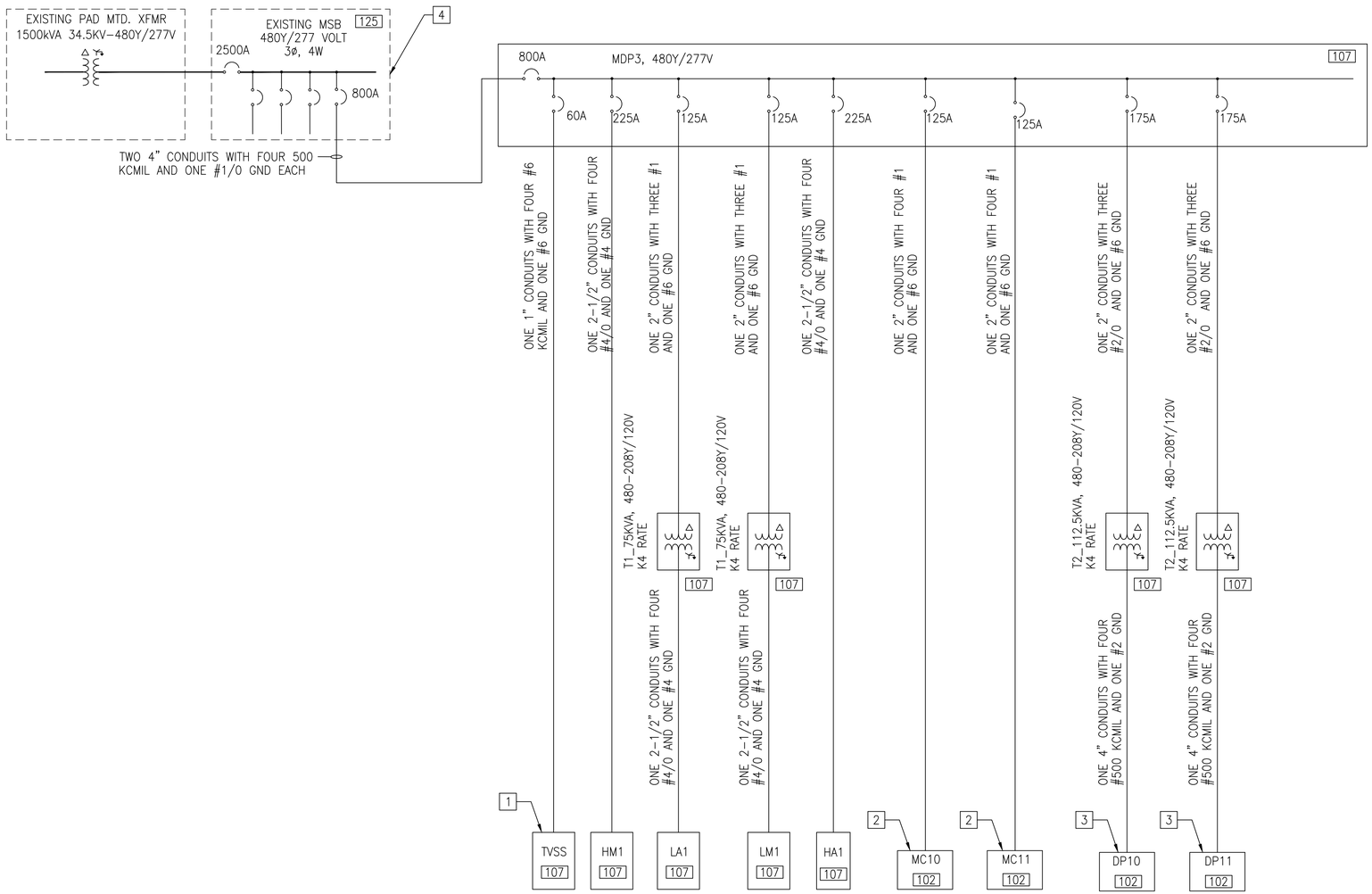

POWER RISER DIAGRAM

NTS

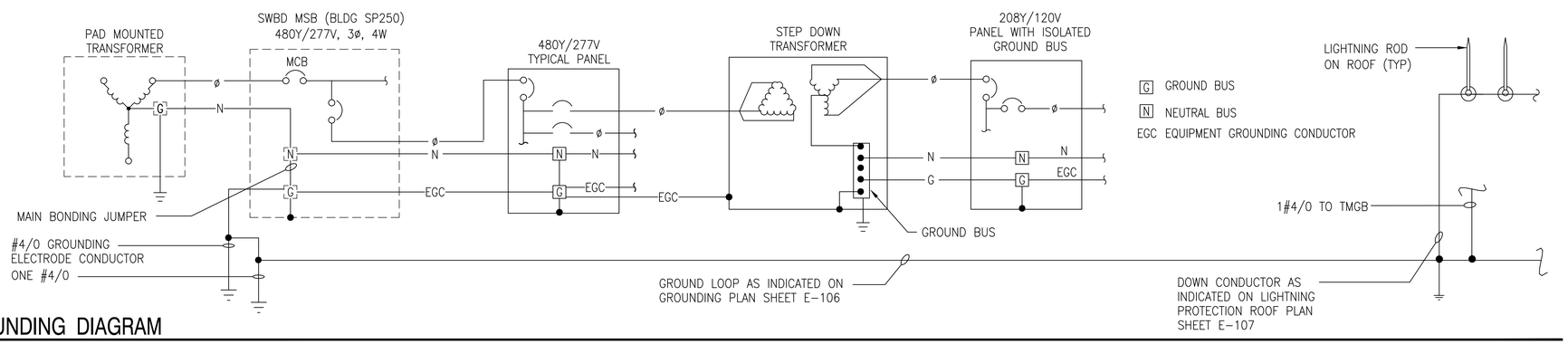

GROUNDING DIAGRAM

NTS

NEW WORK KEYNOTES

1. TVSS WIRING CONNECTION SHALL BE 12" OR LESS FROM MDP3
2. 125A–3P ECB SHUNT TRIP WITH NEUTRAL AND GROUND BAR, 480V/3P VIA CONNECT TO SPRINKLER SENSOR SWITCH
3. 300A–3P ECB SHUNT TRIP WITH NEUTRAL AND GROUND BAR, 208V/3P RATED
4. EXISTING SWITCHBOARD (MSB) LOCATION, SEE SHEET E–105

SYM	DESCRIPTION	DATE	APPR

SEAL

A/E INFO

APPROVED

FOR COMMANDER NAVFAC

ACTIVITY

SATISFACTORY TO DATE

DES HKL DRW HKL CHK KDL

PM/DM M. PERRY/L. SANDERS

BRANCH MANAGER KDL

CHIEF ENG/ARCH RW

FIRE PROTECTION

DEPARTMENT OF THE NAVY
NAVAL FACILITIES ENGINEERING COMMAND
HAMPTON ROADS IPT

NAVAL FACILITIES ENGINEERING COMMAND - MIDATLANTIC
NAVAL STATION – NORFOLK, VIRGINIA

NAVAL STATION NORFOLK

NORFOLK, VIRGINIA

FY 2016 P-518
MH-60 AVET TRAINING FACILITY

POWER RISER AND GROUNDING DIAGRAMS

SCALE: AS NOTED

EPROJECT NO.: 1291639

CONSTR. CONTR. NO.

NAVFAC DRAWING NO.
12701701

SHEET 104 OF 109

E-601

DRAWFORM REVISION: 10 MARCH 2009

FILE NAME: P:\VA\NavalStationNorfolk\MILCON\2016_1291639_P-518_DBB_MH-60 AVET Training Facility\B_Design\Drawings\Sheet Files\14_Electrical\1291639_E601.dwg LAYOUT NAME: E-601 PLOTTED: Wednesday, November 04, 2015 - 9:12am USER: hien.lam

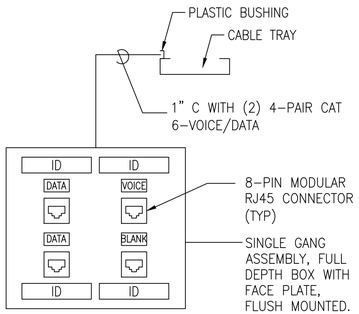

VOICE/DATA OUTLET-DETAIL

NTS

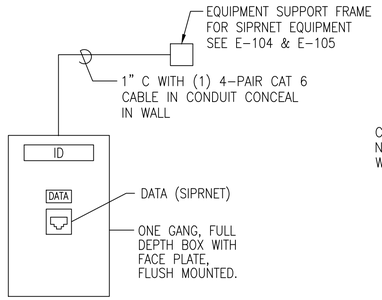

SIPRNET OUTLET-DETAIL

NTS

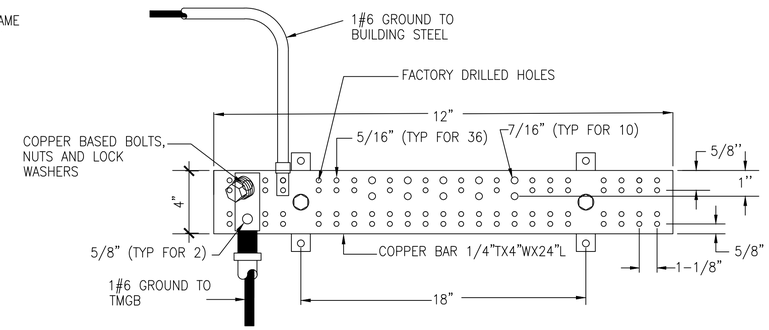

TELECOMMUNICATIONS BONDING BUSBAR DETAIL (TBB) 106

NTS

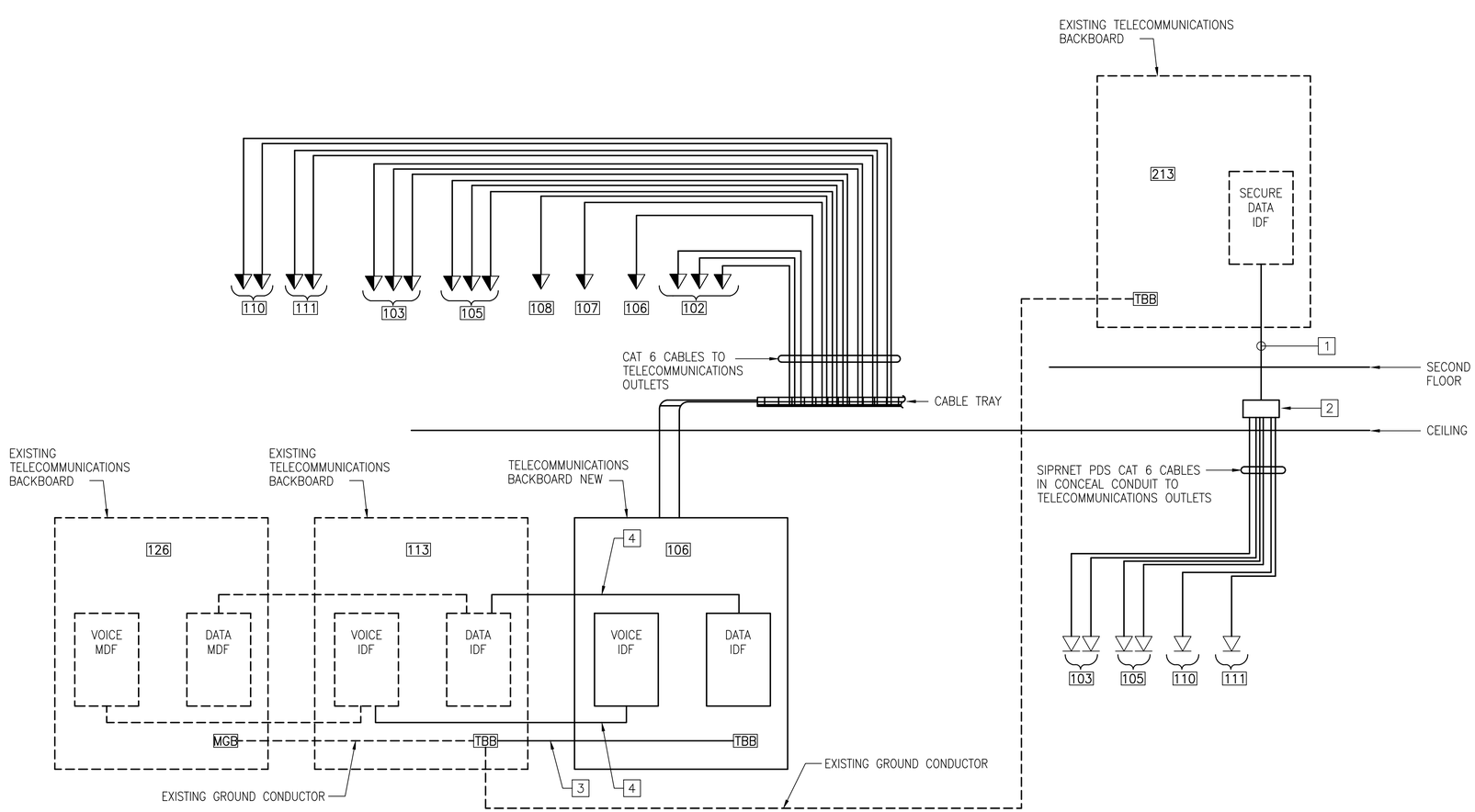

VOICE AND DATA RISER DIAGRAM

SCALE: NONE

GENERAL NOTES

1. CONFIRM LOCATION OF TELECOMMUNICATION OUTLETS PRIOR TO ROUGH-IN.
2. ALL CONNECTORS SHALL HAVE CAT 6 JACK STYLE AND CABLE CONNECTION CONFIGURATION STYLE T568A.
3. TELEPHONE SYSTEM SHALL UTILIZE 110 TYPE TERMINAL BLOCKS AND DATA SYSTEM SHALL UTILIZE MODULAR PATCH PANELS FOR HORIZONTAL CROSS CONNECTION FIELDS. PROVIDE CROSS CONNECTS WITH 25 PERCENT SPARE CAPACITY.

☐ NEW WORK NOTES

1. SIPRNET 6-4 PAIR, 23 AWG, 100 OHM CAT 6 CABLE IN 4" CONDUIT TO EXISTING SECURE COMPUTER ROOM (213) ON SECOND FLOOR, SP-250. ALL JUNCTION BOXES AND CONDUIT FITTINGS SHALL BE EPOXIES CLOSED AND SECURED.
2. SIPRNET JUNCTION BOX LOCATED ABOVE CEILING IN FIRST FLOOR OF CORRIDOR #117. SEE E-104 & E-105.
3. ONE-#6 COPPER GROUND CONDUCTOR IN 1/2" C.
4. CABLE TRAY 12" X 4" AND 25-4 PAIR, 23 AWG, 100 OHM CAT 6 CABLE FOR DATA AND VOICE CONNECTION. SEE E-104 AND E-105 FOR CABLE TRAY ROUTING.

SYM	DESCRIPTION	DATE	APPR

NAVFAC

SEAL

A/E INFO.

APPROVED

FOR COMMANDER NAVFAC

ACTIVITY

SATISFACTORY TO DATE

DES HKL DRW HKL CHK KDL

PM/DM M. PERRY/L. SANDERS

BRANCH MANAGER KDL

CHIEF ENG/ARCH RW

FIRE PROTECTION

DEPARTMENT OF THE NAVY
NAVAL FACILITIES ENGINEERING COMMAND
HAMPTON ROADS IPT

NAVAL FACILITIES ENGINEERING COMMAND - MIDATLANTIC
NAVAL STATION – NORFOLK, VIRGINIA

NAVAL STATION NORFOLK
NORFOLK, VIRGINIA

FY 2016 P-518
MH-60 AVET TRAINING FACILITY

DETAILS

SCALE: AS NOTED

EPROJECT NO.: 1291639

CONSTR. CONTR. NO.

NAVFAC DRAWING NO.
12701702

SHEET 105 OF 109

E-602

DRAWFORM REVISION: 10 MARCH 2009

FILE NAME: P:\VA\NavalStationNorfolk\MILCON\2016_1291639_P-518_DRB_MH-60 AVET Training Facility\B_Design\Drawings\Sheet Files\14_Electrical\1291639_E602.dwg LAYOUT NAME: E-602 PLOTTED: Wednesday, November 04, 2015 - 9:11am USER: hien.lam

PANELBOARD LM1 SCHEDULE

225 A. MCB, 208Y/120V., 3 PHASE, 4 WIRE, 10 KAIC MINIMUM, SURFACE MOUNT

LOAD SERVED	LOAD (AMPS) A	B	C	BKR. TRIP	WIRE SIZE	CKT. NO.	PHASE A B C	CKT. NO.	WIRE SIZE	BKR. TRIP	LOAD (AMPS) A	B	C	LOAD SERVED
DWH-1-A	20			30	8	1		2	8	30	20			DWH-2-A
		20										20		
SPARE			–	20						20			–	SPARE
WSHP-01-A	3			20	12	7		8	12	20	4			EUH-1-A
		3										4		
WSHP-02-A			4	20	12	11		12	12	20			4	EUH-2-A
	4										4			
WSHP-10-A		4		20	12	15		16	12	20		4		SF-1-A
			4										4	
WSHP-11-A	4			20	12	19		20	12	20	4			SF-2-A
		4										4		
WSHP-12-A			4	20	12	23		24	12	20			4	EWC-1-A
	4							26	12	20	4			EF-1-A
B-1-A		1		20	12	27		28	6	30		20		PORTABLE A/C UNIT #1
B-2-A			1	20	12	29							20	
HPIU-1-A	11			20	12	31		32	8	30	20			PORTABLE A/C UNIT #2
SPARE		–		20	–	33						20		
SPARE			–	20	–	35		36	–	20			–	SPARE
SPARE	–			20	–	37		38	–	20	–			SPARE
SPARE		–		20	–	39		40	–	20		–		SPARE
SPARE			–	20	–	41		42	–	20			–	SPARE
TOTAL	46	31	32								29	31	27	TOTAL

TOTAL CONNECTED AMPS A: 75 B: 62 C: 59

1

PANELBOARD HM1 SCHEDULE

225 A. MCB, 480Y/277 V., 3 PHASE, 4 WIRE, 22 KAIC MINIMUM, SURFACE MOUNT

LOAD SERVED	LOAD (AMPS) A	B	C	BKR. TRIP	WIRE SIZE	CKT. NO.	PHASE A B C	CKT. NO.	WIRE SIZE	BKR. TRIP	LOAD (AMPS) A	B	C	LOAD SERVED
CCC-1-A	5			20	12	1		2	12	20	6			WSHP-03-A
		5										6		
			5										6	
CCC-1-A (PUMP)	2			20	12	7		8	12	20	6			WSHP-04-A
		2										6		
			2										6	
CCC-1-A (HEATER)	5			20	12	13		14	12	20	6			WSHP-05-A
		5										6		
			5										6	
WSHP-06-A	6			20	12	19		20	12	20	6			WSHP-07-A
		6										6		
			6										6	
WSHP-08-A	6			20	12	25		26	12	20	6			WSHP-09-A
		6										6		
			6										6	
SPARE	–			20	–	31		32	–	20	–			SPARE
SPARE		–		20	–	33		34	–	20		–		SPARE
SPARE			–	20	–	35		36	–	20			–	SPARE
SPARE	–			20	–	37		38	–	20	–			SPARE
SPARE		–		20	–	39		40	–	20		–		SPARE
SPARE			–	20	–	41		42	–	20			–	SPARE
TOTAL	24	24	24								30	30	30	TOTAL

TOTAL CONNECTED AMPS A: 54 B: 54 C: 54

1

LIGHTING FIXTURE SCHEDULE

FIXTURE SYMBOL	SKETCH NO. & TYPE	NUMBER AND TYPE OF LAMPS	VOLTAGE	MOUNTING	NOTES
A	NL-4	3-F32/T8	277	RECESS	–
B	NL-11	2-F32/T8	277	SURFACE/PENDANT	–
C	NL-24	2-F32/T8	277	WALL	MOUNT 6" ABOVE MIRROR
D	L2	LED-175W	277	WALL	MOUNT 20' AFF
E	NL-63	LED	277	WALL/CEILING	1
F	L3	LED	277	WALL	MOUNT 10' AFF
G	L1	LED	277	ROOF TOP	
H	L5	LED-400W	277	POLE	2, 3, 4
J	L4	LED-70W	277	WALL	5

NOTES:

1. PROVIDE FIXTURE 90 MINUTES BATTERY BACKUP
2. PROVIDE XL-19, TYPE C POLE ON XL-26 POLE FOUNDATION. EACH POLE WILL HAVE 2 LED LUMINARIES MOUNT 180 DEGREE APART
3. PROVIDE PHOTOELECTRIC CONTROL
4. PROVIDE IES TYPE IV DISTRIBUTION
5. MOUNT 12" CENTER ABOVE DOOR, OTHERS LIGHT FIXTURES SHALL BE MOUNT AT 10' AFG.

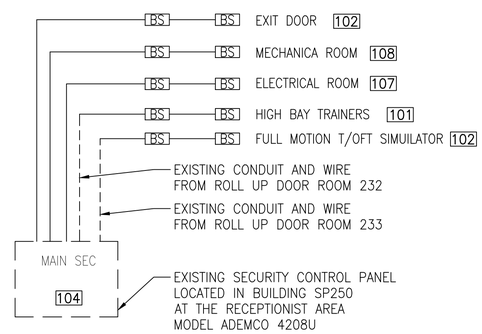

SECURITY SYSTEM RISER DIAGRAM

NTS

NEW WORK KEYNOTES

1. ARC FLASH LABEL, SEE SHEET E-702

SYM	DESCRIPTION	DATE	APPR

NAVFAC

SEAL

A/E INFO

APPROVED

FOR COMMANDER NAVFAC

ACTIVITY

SATISFACTORY TO DATE

DES HKL DRW HKL CHK KDL

PM/DM M. PERRY/L. SANDERS

BRANCH MANAGER KDL

CHIEF ENG/ARCH RW

FIRE PROTECTION

DEPARTMENT OF THE NAVY
NAVAL FACILITIES ENGINEERING COMMAND
HAMPTON ROADS IPT

NAVAL FACILITIES ENGINEERING COMMAND - MIDATLANTIC
NAVAL STATION – NORFOLK, VIRGINIA

NAVAL STATION NORFOLK
NORFOLK, VIRGINIA

FY 2016 P-518
MH-60 AVET TRAINING FACILITY

PANELBOARDS SCHEDULES

SCALE: AS NOTED

EPROJECT NO.: 1291639

CONSTR. CONTR. NO.

NAVFAC DRAWING NO.
12701703

SHEET 106 OF 109

E-603

DRAWFORM REVISION: 10 MARCH 2009

FILE NAME: P:\VA\NavalStationNorfolk\MILCON\2016_1291639_P-518_DRB_MH-60 AVET Training Facility\BI_Design\Drawings\Sheet Files\14_Electrical\1291639_E603.dwg LAYOUT NAME: E-603 PLOTTED: Wednesday, November 04, 2015 - 10:23am USER: hien.lam

SWITCHBOARD MSB SCHEDULE (EXISTING) [125]

2500A. MSB, 480Y/277 V., 3 PHASE, 4 WIRE, 35 KAIC MINIMUM, SURFACE MOUNT

LOAD SERVED	LOAD (AMPS) A	B	C	BKR. TRIP	WIRE SIZE	CKT. NO.	PHASE A B C	CKT. NO.	WIRE SIZE	BKR. TRIP	LOAD (AMPS) A	B	C	LOAD SERVED
TVSS	*			60	*	1		2	*	70	*			ELEVATOR
		*										*		
			*										*	
PANEL UPS	*			225	*	7		8	*	100	*			SPARE
		*										*		
			*										*	
FMT HYDRAULIC PUMP	*			400	*	13		14	*	150	*			SPARE
		*										*		
			*										*	
PANEL HV	*			600	*	19		20	*	225	*			SPARE
		*										*		
			*										*	
PANEL MDP2	*			800	*	25		26	*	175				PANEL C1P
		*												
			*											
PANEL OFT	*			800	*	31		32	*	150				PANEL H2L
		*												
			*											
PANEL MDP3	–			800	(2)	37		38	*	150				SPARE
		–			500									
			–		KCMIL									
TOTAL														TOTAL
TOTAL CONNECTED AMPS A: B: C:														

2

PANELBOARD MDP3 SCHEDULE

800A. MCB, 480Y/277 V., 3 PHASE, 4 WIRE, 22 KAIC MINIMUM, SURFACE MOUNT

LOAD SERVED	LOAD (AMPS) A	B	C	BKR. TRIP	WIRE SIZE	CKT. NO.	PHASE A B C	CKT. NO.	WIRE SIZE	BKR. TRIP	LOAD (AMPS) A	B	C	LOAD SERVED
PANEL HA1	55			225	4/0	1		2	1	125	15			T–1 (PANEL LA1)
		56										15		
			55										15	
PANEL HM1	54			225	4/0	7		8	1	125	33			T–1 (PANEL LM1)
		54										33		
			54										33	
MC–10	80			125	1	13		14	2/0	175	83			T–2 (DP–10)
		80										83		
			80										83	
MC–11	80			125	1	19		20	2/0	175	83			T–2 (DP–11)
		80										83		
			80										83	
SPARE	–			–	–	25		–	–	–	–			SPARE
SPARE		–		–	–	27		–	–	–		–		SPARE
SPARE			–	–	–	29		–	–	–			–	SPARE
SPARE	–			–	–	31		–	–	–	–			SPARE
SPACE		–		–	–	33		–	–	–		–		SPACE
SPACE			–	–	–	35		–	–	–			–	SPACE
SPACE	–			–	–	37		–	–	–	–			SPACE
SPACE		–		–	–	39		–	–	–		–		SPACE
SPACE			–	–	–	41		–	–	–			–	SPACE
TOTAL	269	270	269								254	254	254	TOTAL
TOTAL CONNECTED AMPS A: 523 B: 523 C: 523														

1

PANELBOARD HA1 SCHEDULE

225 A. MCB, 480Y/277 V., 3 PHASE, 4 WIRE, 22 KAIC MINIMUM, SURFACE MOUNT

LOAD SERVED	LOAD (AMPS) A	B	C	BKR. TRIP	WIRE SIZE	CKT. NO.	PHASE A B C	CKT. NO.	WIRE SIZE	BKR. TRIP	LOAD (AMPS) A	B	C	LOAD SERVED
LIGHTING, RM 106–111	5			20	12	1		2	12	20	3			LIGHTING, RM 103–105
LIGHTING, RM 101,102		8		20	12	3		4	12	20		11		LIGHTING, RM 101, 102
LIGHTING EXTERIOR			2	20	12	5		6	10	20			6	LIGHTING PARKING LOT
OBSTRUCTION LIGHT	1			20	12	7		8	–	20	–			SPARE
P–1–A		3		20	12	9		10	12	20		3		P–2–A
			3										3	
	3										3			
DOAS–1–A		12		20	12	15		16	10	30		18		DWH–3–A
			12										18	
	12										18			
ROLL–UP DOOR		5		20	12	21		22	12	20		5		ROLL–UP DOOR
			5										5	
	5										5			
SPARE		–		20	–	27		28	–	20		–		SPARE
SPARE			–	20	–	29		30	–	20			–	SPARE
SPARE	–			20	–	31		32	–	20	–			SPARE
SPARE		–		20	–	33		34	–	20		–		SPARE
SPARE			–	20	–	35		36	–	20			–	SPARE
SPARE	–			20	–	37		38	–	20	–			SPARE
SPARE		–		20	–	39		40	–	20		–		SPARE
SPARE			–	20	–	41		42	–	20			–	SPARE
TOTAL	26	28	22								29	38	33	TOTAL
TOTAL CONNECTED AMPS A: 55 B: 66 C: 55														

1

PANELBOARD LA1 SCHEDULE

225 A. MCB, 208Y/120 V., 3 PHASE, 4 WIRE, 10 KAIC MINIMUM, SURFACE MOUNT

LOAD SERVED	LOAD (AMPS) A	B	C	BKR. TRIP	WIRE SIZE	CKT. NO.	PHASE A B C	CKT. NO.	WIRE SIZE	BKR. TRIP	LOAD (AMPS) A	B	C	LOAD SERVED
RECPT RM 107–108	6			20	12	1		2	12	20	6			RECPT RM 109
RECPT RM 110		6		20	12	3		4	12	20		6		RECPT RM 111
RECPT RM 112–114			6	20	12	5		6	12	20			6	RECPT RM 101–102
RECPT RM 101–102	8			20	10	7		8	12	20	6			RECPT RM 105
RECPT RM 104		5		20	12	9		10	12	20		6		RECPT RM 103
RECPT EXTERIOR			5	20	12	11		12	12	20			3	RECPT RM 106
RECPT RM 106	3			20	12	13		14	12	20	3			SMARTBOARD RECPT RM 105
COMPUTER RECPT RM 103		3		20	12	15		16	12	20		3		COMPUTER RECPT RM 105
SMARTBOARD RECPT RM 103			3	20	12	17		18	12	20			3	COMPUTER RECPT RM 111
COMPUTER RECPT RM 110	3			20	12	19		20	12	20	3			RECPT RM ROOM 106
FIRE ALARM NAC RM 101		1		20	12	21		22	–	20		–		SPARE
SPARE			–	20	–	23		24	–	20			–	SPARE
SPARE	–			20	–	25		26	–	20	–			SPARE
SPARE		–		20	–	27		28	–	20		–		SPARE
SPARE			–	20	–	29		28	–	20			–	SPARE
SPARE	–			20	–	31		32	–	20	–			SPARE
SPARE		–		20	–	33		34	–	20		–		SPARE
SPARE			–	20	–	35		36	–	20			–	SPARE
SPARE	–			20	–	37		38	–	20	–			SPARE
SPARE		–		20	–	39		40	–	20		–		SPARE
SPARE			–	20	–	41		42	–	20			–	SPARE
TOTAL	20	15	14								18	15	15	TOTAL
TOTAL CONNECTED AMPS A: 38 B: 30 C: 29														

1 3 4

NEW WORK KEYNOTES

1. ARC FLASH LABEL, SEE SHEET E–702
2. ASTERISK INDICATES CIRCUIT WITH EXISTING LOADS. SWITCHBOARD MANUFACTURER BY SQUARE D PLAN CODE #23714184–026. SEE E–105 FOR EXISTING LOCATION
3. PAINT ALARM NAC CIRCUIT BREAKER RED
4. PRIOR TO ROUGH–IN POWER RECEPTACLES FOR SMART BOARD COORDINATE WITH INTERIOR DESIGN DRAWINGS FOR EXACT LOCATION.

SYM	DESCRIPTION	DATE	APPR

NAVFAC

SEAL

A/E INFO

APPROVED

FOR COMMANDER NAVFAC

ACTIVITY

SATISFACTORY TO DATE

DES HKL DRW HKL CHK KDL
PM/DM M. PERRY/L. SANDERS
BRANCH MANAGER KDL
CHIEF ENG/ARCH RW
FIRE PROTECTION

DEPARTMENT OF THE NAVY
NAVAL FACILITIES ENGINEERING COMMAND
NAVAL FACILITIES ENGINEERING COMMAND - MIDATLANTIC
NAVAL STATION – NORFOLK, VIRGINIA
NAVAL STATION NORFOLK
HAMPTON ROADS IPT
NORFOLK, VIRGINIA

FY 2016 P-518
MH-60 AVET TRAINING FACILITY

PANELBOARDS SCHEDULES

SCALE: AS NOTED
EPROJECT NO.: 1291639
CONSTR. CONTR. NO.
NAVFAC DRAWING NO. 12701704
SHEET 107 OF 109

E-604

DRAWFORM REVISION: 10 MARCH 2009

FILE NAME: P:\VA\NavalStationNorfolk\MLCON\2016_1291639_P-518_DBB_MH-60 AVET Training Facility\B_Design\Drawings\Sheet Files\14_Electrical\1291639_E604.dwg LAYOUT NAME: E-604 PLOTTED: Wednesday, November 04, 2015 - 10:22am USER: hien.lam

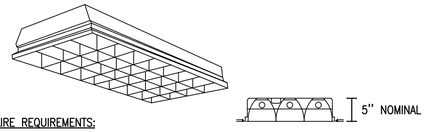

LUMINAIRE REQUIREMENTS:

1. HOUSING – DIE-FORMED, COLD-ROLLED STEEL, WITH REINFORCEMENT RIBS FOR RIGIDITY. ENDCAPS SECURED WITH TABS, SCREWS OR RIVETS. FIXTURE SHALL NOT PERMANENTLY DEFORM OUT OF "SQUARE" WHEN PICKED UP FROM ANY CORNER. INSIDE EDGE OF HOUSING SHALL HAVE FULL FLAT BLACK REVEAL FOR "FLOATING" EFFECT.
2. FINISH – MULTI-STAGE PHOSPHATE BONDING TREATMENT FINISHED WITH HIGH REFLECTANCE (MINIMUM 85%), BAKED WHITE ENAMEL FINISH.
3. LOUVERS – LOW-IRIDESCENT, SEMI-SPECULAR, SILVER ANODIZED ALUMINUM. 3' MINIMUM DEPTH UNLESS MANUFACTURED SPECIFICALLY FOR USE WITH T8 FLUORESCENT LAMPS.
4. LAMPS – LINEAR FLUORESCENT T8, TYPICALLY WITH WATTAGES AS INDICATED. SEE LIGHTING FIXTURE SCHEDULE.
5. BALLAST – CLASS P, THERMALLY-PROTECTED, HIGH POWER FACTOR (≥ .95), ELECTRONIC TYPE WITH SOUND RATING A. SEE SPECIFICATION OR LIGHTING FIXTURE SCHEDULE FOR BALLAST OPTIONS AND SPECIFICS.
6. CERTIFICATION – UL LISTED AND LABELED.
7. PHOTOMETRICS – MINIMUM VALUE OF COEFFICIENT OF UTILIZATION (CU) AND EFFICIENCY, GIVEN INTERIOR CAVITY REFLECTANCES OF 80-50-20:

2 LAMP (F32/T8)

RCR	CU
1	82
2	72
3	64
4	57

EFFICIENCY – 75%

3 LAMP (F32/T8)

RCR	CU
1	81
2	72
3	65
4	58

EFFICIENCY – 76%

4 LAMP (F32/T8)

RCR	CU
1	72
2	65
3	58
4	52

EFFICIENCY – 65%

8. SEE NL-7 FOR OPTIONAL REQUIREMENTS ASSOCIATED WITH THIS FIXTURE. INCLUDE ALL INFORMATION IN LIGHTING FIXTURE SCHEDULE.

A

PARABOLIC RECESSED 2' X 4' FLUORESCENT TROFFER

REVISED: AUGUST 2004 | LIGHTING PLATE: NL-4

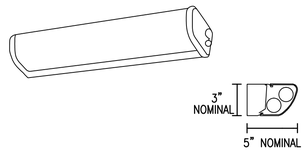

LUMINAIRE REQUIREMENTS:

1. HOUSING – DIE-FORMED, COLD-ROLLED STEEL. ENDCAPS WHEN USED SHALL BE MADE FROM SAME MATERIAL AS HOUSING EXCEPT WHEN OPTIONAL FINISH SUCH AS CHROME IS SPECIFIED.
2. FINISH – MULTI-STAGE PHOSPHATE BONDING TREATMENT FINISHED WITH HIGH REFLECTANCE (MINIMUM 85%), BAKED WHITE ENAMEL FINISH.
3. DIFFUSER – 100% ACRYLIC, CLEAR PRISMATIC, OR WHITE OPAL ACRYLIC. DECORATIVE TREATMENTS ON DIFFUSER ENDS OPTIONAL.
4. LAMPS – LINEAR FLUORESCENT T8 TYPICALLY, WITH WATTAGES AS INDICATED. SEE LIGHTING FIXTURE SCHEDULE.
5. BALLAST – CLASS P, THERMALLY-PROTECTED, HIGH POWER FACTOR (≥ .95), ELECTRONIC TYPE WITH SOUND RATING A. SEE SPECIFICATION OR LIGHTING FIXTURE SCHEDULE FOR BALLAST OPTIONS AND SPECIFICS.
6. CERTIFICATION – UL LISTED AND LABELED.
7. FIXTURE TYPES –

   TYPE A – 2' LENGTH WITH 1 OR 2 T8 FLUORESCENT LAMPS.
   TYPE B – 3' LENGTH WITH 1 OR 2 T8 FLUORESCENT LAMPS.
   TYPE C – 4' LENGTH WITH 1 OR 2 T8 FLUORESCENT LAMPS.

C

FLUORESCENT VANITY LIGHT

REVISED: AUGUST 2004 | LIGHTING PLATE: NL-24

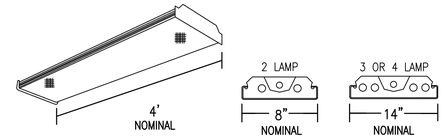

LUMINAIRE REQUIREMENTS:

1. HOUSING – DIE-FORMED, COLD-ROLLED STEEL, WITH REINFORCEMENT RIBS FOR RIGIDITY. ENDCAPS SHALL BE SAME MATERIAL AS HOUSING, SECURED WITH TABS, SCREWS OR RIVETS. FIXTURE SHALL NOT PERMANENTLY DEFORM OUT OF "SQUARE" WHEN PICKED UP FROM ANY CORNER.
2. FINISH – MULTI-STAGE PHOSPHATE BONDING TREATMENT FINISHED WITH HIGH REFLECTANCE (MINIMUM 85%), BAKED WHITE ENAMEL FINISH.
3. LENS – 100% ACRYLIC, CLEAR PRISMATIC, LINEAR SIDE PRISMS AND PYRAMIDAL BOTTOM PRISMS FOR BRIGHTNESS CONTROL AND MINIMAL LAMP IMAGING, RESPECTFULLY. LENS SHALL BE CAPABLE OF BEING HINGED FROM EITHER SIDE.
4. LAMPS – LINEAR FLUORESCENT T8, TYPICALLY WITH WATTAGES AS INDICATED. SEE LIGHTING FIXTURE SCHEDULE.
5. BALLAST – CLASS P, THERMALLY-PROTECTED, HIGH POWER FACTOR (≥ .95), ELECTRONIC TYPE WITH SOUND RATING A. SEE SPECIFICATION OR LIGHTING FIXTURE SCHEDULE FOR BALLAST OPTIONS AND SPECIFICS.
6. CERTIFICATION – UL LISTED AND LABELED.
7. PHOTOMETRICS – MINIMUM VALUE OF COEFFICIENT OF UTILIZATION (CU) AND EFFICIENCY, GIVEN INTERIOR CAVITY REFLECTANCES OF 80-50-20:

2 LAMP (F32/T8)

RCR	CU
1	76
2	67
3	60
4	54

EFFICIENCY – 76%

B

FLUORESCENT WRAPAROUND – UTILITY AREAS

REVISED: AUGUST 2004 | LIGHTING PLATE: NL-11

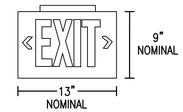

LUMINAIRE REQUIREMENTS:

1. HOUSING – DIE-CAST ALUMINUM OR HIGH-IMPACT, UV-STABILIZED, INJECTION-MOLDED THERMOPLASTIC. SINGLE OR DOUBLE-FACED AS INDICATED.
2. FINISH (ON CAST ALUMINUM HOUSING ONLY) – TEXTURED POWDER COAT FINISH OPTIONS INCLUDE WHITE, WHITE WITH BRUSHED ALUMINUM FACE, BLACK, OR BLACK WITH BRUSHED ALUMINUM FACE.
3. LETTERS/CHEVRONS – MINIMUM 6" HIGH WITH 3/4" STROKE. RED OR GREEN LETTERS AS INDICATED. PROVIDE CHEVRONS AS INDICATED EITHER LEFT, RIGHT OR BOTH DIRECTIONS AS INDICATED. CHEVRONS PUNCHED OUT THROUGH HOUSING AS REQUIRED.
4. EMERGENCY PACK – SOLID-STATE, CONSTANT-CURRENT TYPE BATTERY CHARGER WITH MAINTENANCE-FREE, NICKEL-CADMIUM BATTERY, AC-ON INDICATOR LAMP AND TEST SWITCH.
5. MOUNTING – UNIVERSAL MOUNTING KIT FOR CEILING, WALL OR END-OF-FIXTURE MOUNTING.
6. ILLUMINATION – PROVIDED BY RED, GREEN OR WHITE HIGH-OUTPUT LEDS INSIDE OF FIXTURE HOUSING. PROVIDE POLYSTYRENE DIFFUSER IN COLOR INDICATED WITH FREQUENCY-MATCHED SILKSCREEN COATING FOR MAXIMUM LED LIGHT OUTPUT.
7. CERTIFICATION – UL LISTED AND CERTIFIED FOR DAMP LOCATIONS.

E

LED EXIT SIGN

REVISED: AUGUST 2004 | LIGHTING PLATE: NL-63

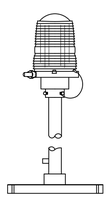

LUMINAIRE REQUIREMENTS:

1. HOUSING – DIE-CAST ALUMINUM WITH POLYESTER POWDER COAT FINISH.
2. MOUNTING – 3/4" OR 1", SIDE OR BOTTOM CONDUIT MOUNTING AS INDICATED.
3. GLOBE – TEMPERED RED FRESNEL GLASS GLOBE WITH LATCHING RING AND MECHANISM TO HOLD GLOBE FIRMLY ONTO BASE. PROVIDE CABLE TYPE TETHER WIRE. OTHER GLOBE COLORS AVAILABLE AS INDICATED.
4. LAMP – LED BASED L-810 RED LED OBSTRUCTION LIGHTS. SEE LIGHTING FIXTURE SCHEDULE.
5. FIXTURE BASE – PROVIDE MATCHING BASE FOR FIXTURE MOUNTING AS INDICATED.
6. CERTIFICATION – ETL VERIFIED PER FAA AC 150/5345-43.
7. OTHER – PROVIDE SINGLE OR TWIN FIXTURE HEADS AS INDICATED; (SINGLE HEAD FIXTURE DEPICTED).

LED OBSTRUCTION LIGHT

G

L1

NOT TO SCALE

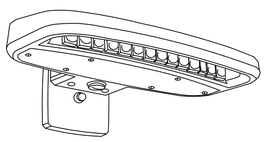

LUMINAIRE REQUIREMENTS:

1. HOUSING – DIE-CAST OR EXTRUDED ALUMINUM WITH INTEGRAL PASSIVE COOLING MECHANISM. HEAT SINK SHALL BE INCORPORATED DIRECTLY INTO HOUSING OR DRIVER COMPARTMENT TO ENSURE MAXIMUM HEAT TRANSFER AND DISSIPATION.
2. FINISH – MULTI-STAGE PRE-TREATMENT, FINISHED WITH BAKED-ON POLYESTER POWDER COAT. FINISH SHALL PASS 2500 HOUR SALT SPRAY TEST PER ASTM B117. STANDARD FINISH IS DARK BRONZE, WITH OTHER CUSTOM COLORS AVAILABLE.
3. CERTIFICATION – UL AND/OR ETL LISTED FOR DAMP OR WET LOCATIONS AS INDICATED, AND RoHS COMPLIANT.
4. OPTIONS – VARIOUS LUMEN OUTPUT RATING AS INDICATED, PHOTOCELL, AND 0-10 VOLT DIMMING DRIVER.
5. OTHER – THE ABOVE SKETCH IS A NON-PROPRIETY GRAPHIC REPRESENTATION OF A LUMINAIRE THAT MAY MEET THE SPECIFICATION REQUIREMENTS AND IS NOT INTENDED TO INDICATE A CERTAIN MANUFACTURER'S PREFERENCE. ALL DIMENSIONS ARE NOMINAL AND VARY PER MANUFACTURER.

LED WALL PACK HIGH OUTPUT

D

L2

NOT TO SCALE

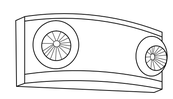

LUMINAIRE REQUIREMENTS:

1. HOUSING – UV STABLE, FLAME-RATED, HIGH-IMPACT THERMOPLASTIC IN WHITE OR BLACK TEXTURED FINISH.
2. INTERNAL COMPONENTS – FULLY AUTOMATIC, SOLID STATE, CONSTANT VOLTAGE, CURRENT-LIMITED BATTERY CHARGER; MAINTENANCE-FREE LEAD-ACID BATTERY; AND BUILT-IN OVERLOAD AND LOW-VOLTAGE BATTERY PROTECTION. EXTERIOR HOUSING INDICATORS – LED AC-ON INDICATOR AND INTEGRAL TEST SWITCH.
3. LAMP HEADS – THE TYPICAL LIFE OF THE LED IS 20 YEARS. TWO WHITE LED LAMPS HEAD FOR EMERGENCY LIGHT.
4. MOUNTING – DIRECTLY TO 4" OCTAGONAL OR SQUARE OUTLET BOX.
5. CERTIFICATION – UL LISTED AND LABELED. COMPLIES WITH UL 924 AND NFPA 101 REQUIREMENTS. LISTED FOR DAMP LOCATIONS.
6. OPTIONS – VOLTMETER, VANDEL-RESISTANT SHIELD, SELF-DIAGNOSTIC/TESTING ELECTRONICS AND WIRE GUARD.

LED EMERGENCY LIGHTING UNIT

F

L3

NOT TO SCALE

LUMINAIRE REQUIREMENTS:

1. HOUSING/BACKPLATE – ONE-PIECE, DIE-CAST ALUMINUM WITH BAKED-ON POLYESTER POWDER COAT FINISH IN DARK BRONZE.
2. DIFFUSER – CLEAR PRISMATIC, UV-STABILIZED, INJECTION-MOLDED ACRYLIC LENS PROVIDED WITH SILICON GASKET TO CREATE WEATHERPROOF ENCLOSURE. STAINLESS STEEL SCREWS FASTEN LENS TO HOUSING. POLISHED INTERNAL ALUMINUM SHROUD OVER TOP HALF OF SIDES AND FRONT ALONG WITH TOP OF FIXTURE PROVIDE LOW PROJECTION OF LIGHT OUTPUT.
3. THE LED DRIVER IS MOUNTED TO THE FRONT CASTING TO THERMALLY ISOLATE IT FROM THE LIGHT ENGINE FOR LOW OPERATING TEMPERATURE AND LONG LIFE. HOUSING IS COMPLETELY SEALED AGAINST MOISTURE AND ENVIRONMENTAL CONTAMINANTS.
4. LIGHT ENGINE(S) CONSIST OF 10 OR 30 HIGH-EFFICACY LEDS MOUNTED TO A METAL-CORE CIRCUIT BOARD AND INTEGRAL ALUMINUM HEAT SINK TO MAXIMIZE HEAT DISSIPATION AND PROMOTE LONG LIFE (L94/100,000 HRS AT 25°C). THE ELECTRONIC DRIVER HAS A POWER FACTOR OF >90%, THD <20%, AND A MINIMUM 2.5 KV SURGE RATING.
5. CERTIFICATION – UL LISTED AND LABELED FOR WET LOCATIONS.
6. OPTIONS – LENS OPTIONS INCLUDE FULL FACE SHIELD WITH UP OR DOWN LIGHTING OR FULL FACE SHIELD WITH SIDES CLEAR. PHOTOCELL ALSO OPTIONAL.

LED WALL PACK LOW OUTPUT

J

L4

NOT TO SCALE

SYM	DESCRIPTION	DATE	APPR

NAVFAC

SEAL

A/E INFO

APPROVED

FOR COMMANDER NAVFAC

ACTIVITY

SATISFACTORY TO DATE

DES HKL | DRW HKL | CHK KDL

PM/DM M. PERRY/L. SANDERS

BRANCH MANAGER KDL

CHIEF ENG/ARCH RW

FIRE PROTECTION

DEPARTMENT OF THE NAVY
NAVAL FACILITIES ENGINEERING COMMAND
HAMPTON ROADS IPT.

NAVAL FACILITIES ENGINEERING COMMAND - MIDATLANTIC
NAVAL STATION – NORFOLK, VIRGINIA

NAVAL STATION NORFOLK
NORFOLK, VIRGINIA

FY 2016 P-518
MH-60 AVET TRAINING FACILITY

LIGHTING DETAILS

SCALE: AS NOTED

EPROJECT NO.: 1291639

CONSTR. CONTR. NO.

NAVFAC DRAWING NO.
12701705

SHEET 108 OF 109

E-701

DRAWFORM REVISION: 10 MARCH 2009

FILE NAME: P:\VA\NavalStationNorfolk\MI.CON\2016_1291639_P-518_DBB_MH-60 AVET Training Facility\B_Design\Drawings\Sheet Files\14_Electrical\1291639_E701.dwg LAYOUT NAME: E-701 PLOTTED: Wednesday, November 04, 2015 - 9:09am USER: hien.lam

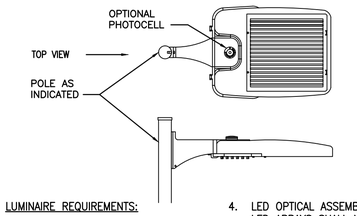

LUMINAIRE REQUIREMENTS:

1. HOUSING – DIE-CAST ALUMINUM OR DIE-CAST AND EXTRUDED ALUMINUM WITH INTEGRAL, SELF-CLEANING HEAT SINK FINS, RIBS, OR EQUIVALENT PASSIVE COOLING MECHANISM. HEAT SINK SHALL BE INCORPORATED DIRECTLY INTO HOUSING TO ENSURE MAXIMUM HEAT TRANSFER AND DISSIPATION.

2. FINISH – MULTI-STAGE PRE-TREATMENT, FINISHED WITH BAKED-ON POLYESTER POWDER COAT. FINISH SHALL PASS 2500 HOUR SALT SPRAY TEST PER ASTM B117. FINISH COLORS INCLUDE DARK BRONZE, SILVER, OR BLACK WITH CUSTOM COLORS AVAILABLE.

3. POWER SUPPLY/LED DRIVER – PROVIDE IN SEPARATE COMPARTMENT ACCESSIBLE WITHOUT THE USE OF HAND TOOLS. CLASS 1 DRIVER SHALL OPERATE AT 120/277V, 50/60 HZ; OTHER VOLTAGES OPTIONAL. POWER FACTOR GREATER THAN 0.9 AND THD LESS THAN 20% AT FULL LOAD. MINIMUM EFFICACY SHALL BE 60 LM/W AT MAXIMUM 600 mA OPERATING CURRENT.

4. LED OPTICAL ASSEMBLY – NUMBER OF LED ARRAYS SHALL VARY TO ACCOMMODATE DESIRED LUMINAIRE OUTPUT. PROVIDE WITH EQUIVALENT NEMA TYPE III, IV OR V DISTRIBUTION AS INDICATED. BUG UPLIGHT RATING OF U0, WITH BACKLIGHT AND GLARE RATINGS AS DETERMINED BY LIGHTING ZONE INSTALLED. MINIMUM COLOR RENDERING INDEX (CRI) SHALL BE 70 FOR CORRELATED COLOR TEMPERATURE (CCT) OF 5000 K TO 6500 DEGREES K.

5. SURGE PROTECTION – 6 kV MINIMUM, COMPLIANT WITH ANSI C62.41.2.

6. CERTIFICATION – UL AND/OR ETL LISTED, MINIMUM IP65 RATED PER ANSI/IEC 60529, AND RoHS COMPLIANT.

7. OPTIONS – PHOTOCELL AND RECEPTACLE, SHORTING CAP, BIRD SPIKES, AND 0-10 VOLT DIMMING DRIVER.

8. OTHER – THE ABOVE SKETCH IS A NON-PROPRIETARY GRAPHIC REPRESENTATION OF A LUMINAIRE THAT MAY MEET THE SPECIFICATION REQUIREMENTS AND IS NOT INTENDED TO INDICATE A CERTAIN MANUFACTURER'S PREFERENCE. ALL DIMENSIONS ARE NOMINAL AND VARY PER MANUFACTURER.

LED AREA LUMINAIRE

H

L5

NOT TO SCALE

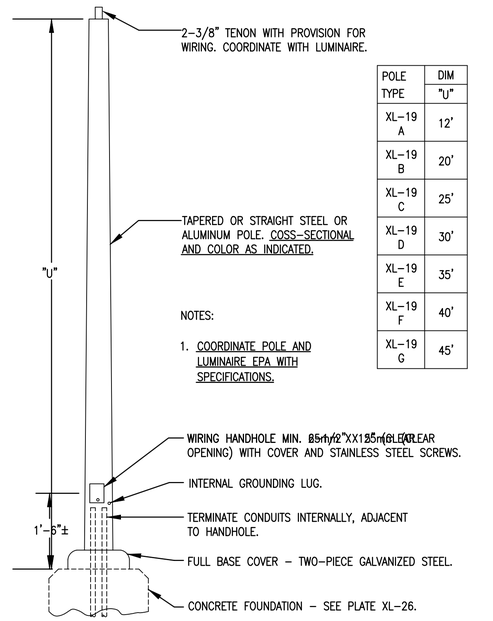

POLE TYPE	DIM "U"
XL-19 A	12'
XL-19 B	20'
XL-19 C	25'
XL-19 D	30'
XL-19 E	35'
XL-19 F	40'
XL-19 G	45'

NOTES:

1. COORDINATE POLE AND LUMINAIRE EPA WITH SPECIFICATIONS.

STEEL/ALUMINUM POLE – ANCHOR-BASE, TENON MOUNT

SKETCH DATE AUGUST 2004 | STYLE XL-19

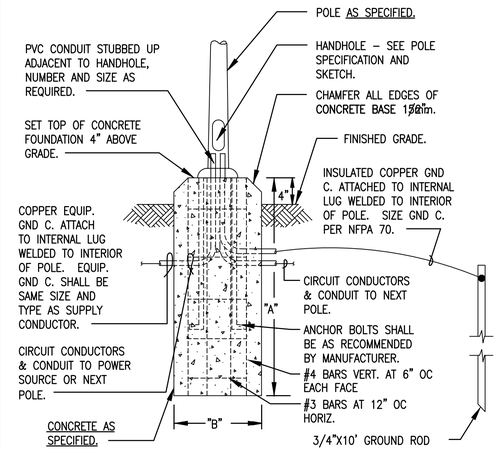

LEGEND

GND C. – GROUNDING CONDUCTOR

POLE HT.	A	B
8' – 12'	36"	12"
13' – 20'	42"	16"
21' – 30'	72"	24"
31' – 40'	78"	30"

BOLT-DOWN POLE FOUNDATIONS

SKETCH DATE AUGUST 2004 | STYLE XL-26

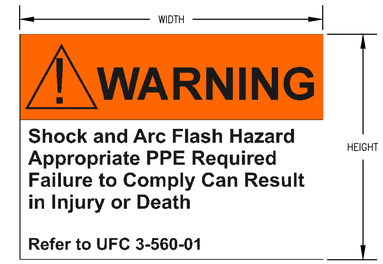

NOTES:

1. PROVIDE SELF-ADHESIVE VINYL LABEL TO AFFIX TO ELECTRICAL EQUIPMENT TO WARN OF ARC FLASH HAZARDS.

2. THE LABEL FORMAT AND TEXT SHALL BE IN ACCORDANCE WITH THE FIGURE.

3. THE LABEL SHALL BE LOCATED ON THE EQUIPMENT TO BE CLEARLY VISIBLE TO QUALIFIED PERSONS BEFORE EXAMINATION, ADJUSTMENT, SERVICING, OR MAINTENANCE OF THE EQUIPMENT.

4. THE SIZE OF THE LABEL SHALL BE:

EQUIPMENT TYPE	HEIGHT	WIDTH
INDOOR	2"	3"
OUTDOOR	4"	6"

5. A DOWNLOADABLE WINDOWS METAFILE IS AVAILABLE ON THE WHOLE BUILDING DESIGN GUIDE WEBSITE (WWW.WBDG.ORG) FOR USE IN A LABEL MAKING MACHINE.

   A. THE FILE IS LOCATED ON THE "NAVFAC CADD DETAILS" PAGE. TO NAVIGATE TO THIS LOCATION, FOLLOW: HOME > DOCUMENTS & REFERENCES > CCB > CADD LIBRARY > NAVFAC CADD RESOURCES > NAVFAC CADD DETAILS.

   B. ALTERNATIVELY, TYPE IN THE FOLLOWING ADDRESS IN INTERNET EXPLORER: HTTP://WWW.WBDG.ORG/CCB/BROWSE_CAT.PHP?O=78&C=232

ARC FLASH WARNING LABEL

SKETCH DATE JANUARY 2008 | STYLE AF-1

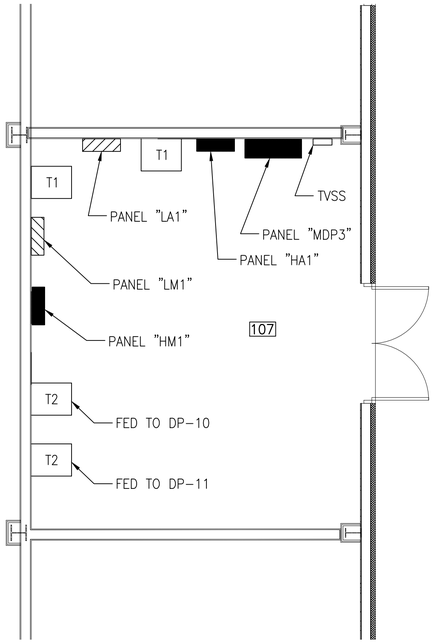

ELECTRICAL ROOM ENLARGED PLAN

A

SCALE: 1/4" = 1'-0"

E-103

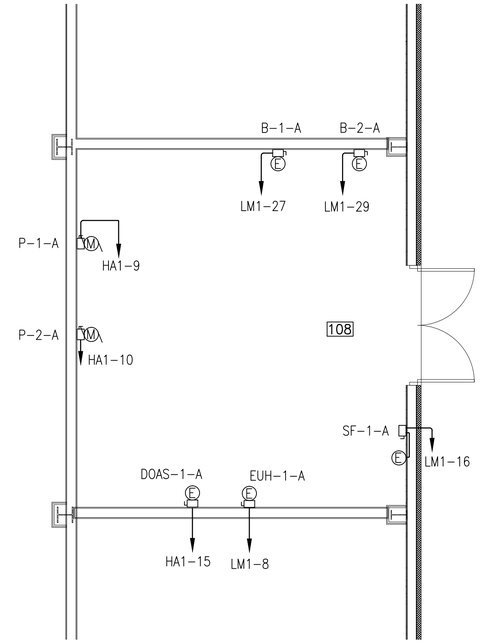

MECHANICAL ROOM ENLARGED PLAN

B

SCALE: 1/4" = 1'-0"

E-103

1/4" = 1'-0" 0 2' 4' 8'

APPR	DATE	DESCRIPTION	SYM

NAVFAC

SEAL

A/E INFO

APPROVED

FOR COMMANDER NAVFAC

ACTIVITY

SATISFACTORY TO DATE

DES HKL DRW HKL CHK KDL

PM/DM M. PERRY/L. SANDERS

BRANCH MANAGER KDL

CHIEF ENG/ARCH RW

FIRE PROTECTION

DEPARTMENT OF THE NAVY
NAVAL FACILITIES ENGINEERING COMMAND
HAMPTON ROADS IPT

NAVAL FACILITIES ENGINEERING COMMAND - MIDATLANTIC
NAVAL STATION – NORFOLK, VIRGINIA

NAVAL STATION NORFOLK
NORFOLK, VIRGINIA

FY 2016 P-518
MH-60 AVET TRAINING FACILITY

LIGHTING DETAILS

SCALE: AS NOTED

EPROJECT NO.: 1291639

CONSTR. CONTR. NO.

NAVFAC DRAWING NO. 12701706

SHEET 109 OF 109

E-702

DRAWFORM REVISION: 10 MARCH 2009

FILE NAME: P:\VA\NorfolkStationNorfolk\MILCON\2016_1291639_P-518_DRB_MH-60 AVET Training Facility\BI_Design\Drawings\Sheet Files\14_Electrical\1291639_E702.dwg LAYOUT NAME: E-702 PLOTTED: Wednesday, November 04, 2015 - 9:09am USER: hien.lam