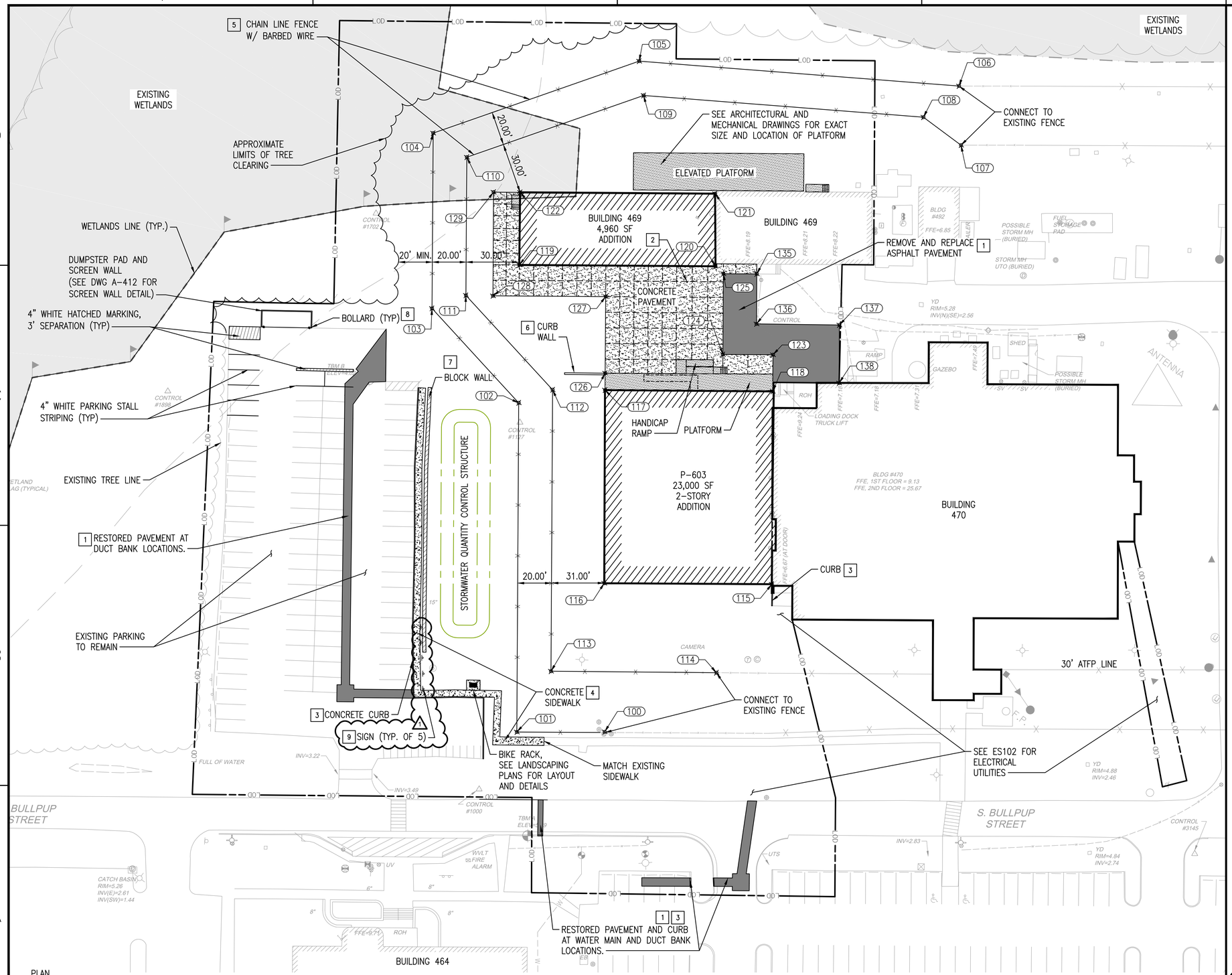


PLAN NORTH

## LAYOUT SITE PLAN

SCALE: 1" = 30'

| SITE LAYOUT POINT TABLE | | | |
|---|---|---|---|
| NUMBER | NORTHING | EASTING | DESCRIPTION |
| 100 | 3447791.75 | 12227247.79 | FENCE |
| 101 | 3447760.42 | 12227206.38 | FENCE CORNER |
| 102 | 3447916.50 | 12227090.15 | FENCE |
| 103 | 3447930.23 | 12227015.60 | FENCE |
| 104 | 3448013.42 | 12226953.79 | FENCE |
| 105 | 3448120.71 | 12227025.46 | FENCE |
| 106 | 3448222.79 | 12227185.34 | FENCE |
| 107 | 3448195.60 | 12227207.36 | FENCE |
| 108 | 3448195.42 | 12227179.64 | FENCE |
| 109 | 3448106.11 | 12227039.76 | FENCE |
| 110 | 3448014.04 | 12226978.25 | FENCE |
| 111 | 3447948.47 | 12227026.96 | FENCE |
| 112 | 3447934.74 | 12227101.50 | FENCE |
| 113 | 3447801.29 | 12227200.88 | FENCE |
| 114 | 3447859.45 | 12227279.54 | FENCE |
| 115 | 3447920.98 | 12227274.21 | BLDG CORNER |
| 116 | 3447861.79 | 12227194.72 | BLDG CORNER |
| 117 | 3447953.26 | 12227126.36 | BLDG CORNER |
| 118 | 3448012.35 | 12227206.04 | BLDG CORNER |
| 119 | 3447981.84 | 12227041.35 | BLDG CORNER |
| 120 | 3448051.03 | 12227134.49 | BLDG CORNER |
| 121 | 3448085.17 | 12227108.48 | BLDG CORNER |
| 122 | 3448016.40 | 12227015.91 | BLDG CORNER |
| 123 | 3448029.70 | 12227193.13 | CORNER CONCRETE |
| 124 | 3448011.99 | 12227169.35 | CORNER CONCRETE |
| 125 | 3448050.32 | 12227140.88 | CORNER CONCRETE |
| 126 | 3447961.29 | 12227120.40 | CORNER CONCRETE |
| 127 | 3447997.62 | 12227093.40 | CORNER CONCRETE |
| 128 | 3447957.89 | 12227039.92 | CORNER CONCRETE |
| 129 | 3448007.05 | 12227003.32 | CORNER CONCRETE |
| 135 | 3448062.09 | 12227156.71 | CORNER PAVEMENT |
| 136 | 3448038.39 | 12227174.36 | CORNER PAVEMENT |
| 137 | 3448067.38 | 12227213.87 | CORNER PAVEMENT |
| 138 | 3448039.92 | 12227234.39 | CORNER PAVEMENT |

## KEY NOTES

1. ASPHALT PAVEMENT SECTION (1/C-501)
2. CONCRETE PAVEMENT (2/C-501)
3. CONCRETE CURB (3/C-501)
4. 4' CONCRETE SIDEWALK (4/C-501)
5. SECURITY FENCE (5/C-501)
6. CURB WALL (8/C-501)
7. RETAINING WALL (7/C-501)
8. BOLLARD (6/C-502)
9. SIGN (4/C-508)

GRAPHIC SCALE: 1" = 30' — 0 15' 30' 60'

| SYM | DESCRIPTION | DATE | APPR |
|---|---|---|---|
| 1 | AMENDMENT CHANGES | 03/18/2016 | KNW |

NAVFAC

COMMONWEALTH OF VIRGINIA — KEVIN NATHANIEL WEMPLER — Lic. No. 402054205 — 3/18/16 — PROFESSIONAL ENGINEER

BURNS McDONNELL
1305 EXECUTIVE BLVD.
SUITE 160
CHESAPEAKE, VA 23320
757-548-2056

A/E INFO

APPROVED
FOR COMMANDER NAVFAC
ACTIVITY
SATISFACTORY TO DATE
DES KW DRW FP CHK LRM
PM
BRANCH MANAGER
CHIEF ENG/ARCH

DEPARTMENT OF THE NAVY
NAVAL FACILITIES ENGINEERING COMMAND
EFD-HAMPTON ROADS
NAVAL FACILITIES ENGINEERING COMMAND ~ MIDLANT
NAVAL STATION NORFOLK
NAS OCEANA–DAM NECK ANNEX
VIRGINIA BEACH, VIRGINIA

# P-603 MARITIME SURVEILLANCE SYSTEM FACILITY

LAYOUT SITE PLAN

SCALE: AS NOTED
EPROJECT NO.: 1344924
CONSTR. CONTR. NO. N40085-16-R-6119
NAVFAC DRAWING NO. 12712778
SHEET 12 OF 296
C-201

DRAWFORM REVISION: 10 MAY 2014

FILE NAME: Z:\Clients\ANF\USNavy\MGM\82327_P603MSFSC\Design\Civil\Sheets\C201.dwg LAYOUT NAME: C-201 PLOTTED: Thursday, March 17, 2016 - 11:58am USER: kwarrender

## TEMPORARY SEDIMENT TRAP

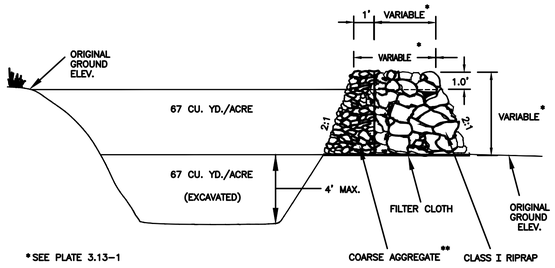


CROSS SECTION OF OUTLET

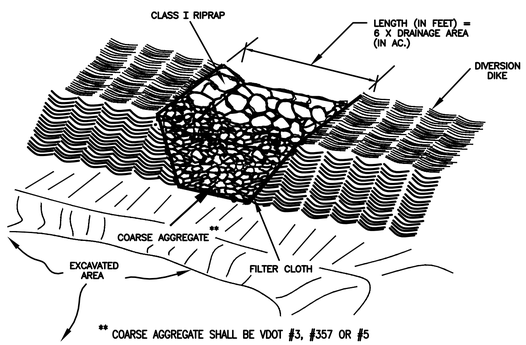


OUTLET (PERSPECTIVE VIEW)

SOURCE: VA. DSWC — PLATE. 3.13-2

### TEMPORARY SEDIMENT TRAP

NOT TO SCALE — C-404 — (1)

## TEMPORARY DIVERSION DIKE

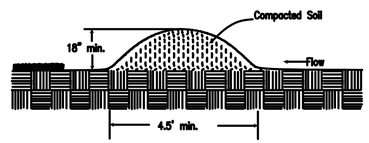


SOURCE: VA. DSWC — PLATE 3.09-1

### TEMPORARY DIVERSION DIKE

NOT TO SCALE — C-404 — (3)

## MINIMUM TOP WIDTH (W) REQUIRED FOR SEDIMENT TRAP EMBANKMENTS ACCORDING TO HEIGHT OF EMBANKMENT (FEET)

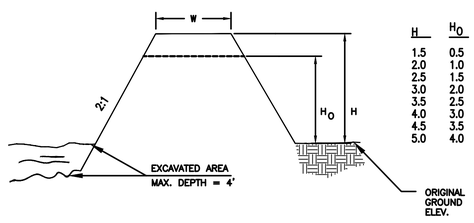


| H | HO | W |
|---|---|---|
| 1.5 | 0.5 | 2.0 |
| 2.0 | 1.0 | 2.0 |
| 2.5 | 1.5 | 2.5 |
| 3.0 | 2.0 | 2.5 |
| 3.5 | 2.5 | 3.0 |
| 4.0 | 3.0 | 3.0 |
| 4.5 | 3.5 | 4.0 |
| 5.0 | 4.0 | 4.5 |

SOURCE: VA. DSWC — PLATE. 3.13-1

### TEMPORARY SEDIMENT TRAP

NOT TO SCALE — C-404 — (2)

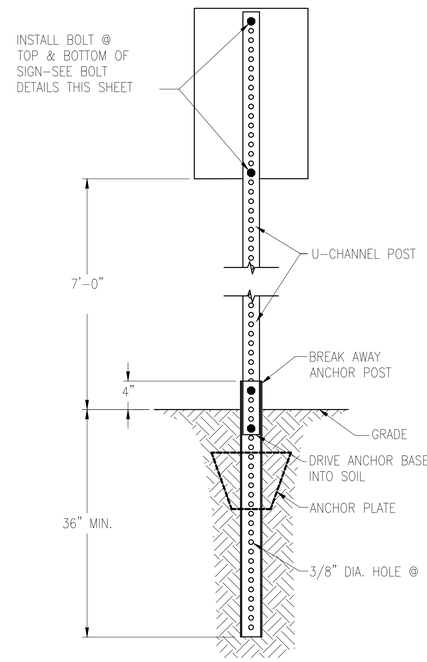


SIGN R7-8

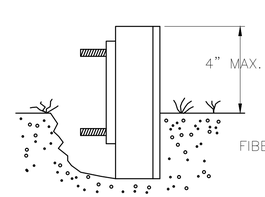


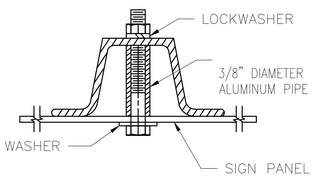


FRONT MOUNT BRACKET

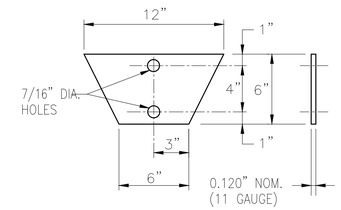


SOIL ANCHOR PLATE

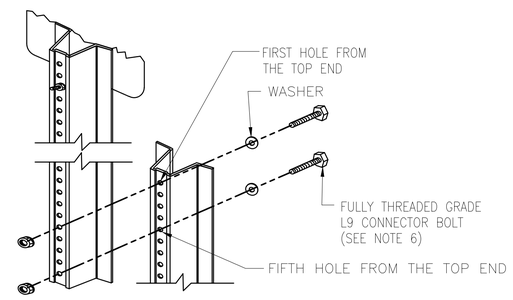


ANCHOR POST ASSEMBLY SIGN SUPPORTS

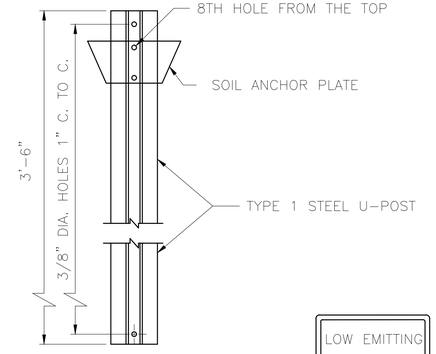


ANCHOR POST ASSEMBLY

LOW EMITTING
FUEL
EFFICIENT
VEHICLE
PARKING
ONLY

R7-301
18"x12"
GREEN IN WHITE BACKGROUND

SIGN PANEL

NOTES:

1. CONTRACTOR SHALL FURNISH & INSTALL SIGN POSTS, ANCHOR BASES AND SLEEVES AS SPECIFIED.
2. SIGN POST SHALL BE YIELDING BREAKAWAY TYPE.
3. PROVIDE 3 LB/FT STEEL U-CHANNEL POST WITH A MINIMUM SECTION MODULUS OF 0.43 $IN^3$ FOR 60 KSI STEEL, A MINIMUM SECTION MODULUS OF 0.37 $IN^3$ FOR 70 KSI STEEL, OR A MINIMUM SECTION MODULUS OF 0.34 $IN^3$ FOR 80 KSI STEEL.
4. U-CHANNEL POST SHALL BE GALVANIZED AND CONFORM WITH ASTM A499, GRADE 60, OR ASTM A576, GRADE 1080 (WITH A MINIMUM YIELD STRENGTH OF 60 KSI). GALVANIZING SHALL BE IN CONFORMANCE WITH ASTM A123.
5. SIGN POST SHALL BE INSTALLED FACING THE PREDOMINANT TRAFFIC FLOW OR AS INDICATED ON THE PLANS.
6. SIGN POST ANCHOR POST SHALL BE INSTALLED PLUMB.
7. BOLTS SHALL NOT PROTRUDE MORE THAN 3/4" BEYOND THE NUT WHEN TIGHT BUT SHALL ENGAGE ALL THREADS IN THE NUT.
8. SIGN FINISH SHALL BE HIGH INTENSITY.
9. SIGN LOCATION SHALL BE IN ACCORDANCE WITH MUTCD.

### SIGN

NOT TO SCALE — C-201 — (4) △1

| SYM | DESCRIPTION | DATE | APPR |
|---|---|---|---|
| 1 | AMENDMENT CHANGES | 03/18/2016 | KNW |

NAVFAC

COMMONWEALTH OF VIRGINIA — KEVIN NATHANIEL WEAVER — Lic. No. 402054205 — 3/18/16 — PROFESSIONAL ENGINEER

BURNS McDONNELL
1305 EXECUTIVE BLVD.
SUITE 160
CHESAPEAKE, VA 23320
757-548-2056

A/E INFO

APPROVED
FOR COMMANDER NAVFAC
ACTIVITY
SATISFACTORY TO DATE
DES KW DRW FP CHK LRM
PM
BRANCH MANAGER
CHIEF ENG/ARCH

DEPARTMENT OF THE NAVY
NAVAL FACILITIES ENGINEERING COMMAND
NAVAL FACILITIES ENGINEERING COMMAND ~ MIDLANT
IPT-HAMPTON ROADS
NAVAL STATION NORFOLK
NAS OCEANA-DAM NECK ANNEX
VIRGINIA BEACH, VIRGINIA
P-603 MARITIME SURVEILLANCE SYSTEM FACILITY
DETAILS

SCALE: AS NOTED
EPROJECT NO.: 1344924
CONSTR. CONTR. NO. N40085-16-R-6119
NAVFAC DRAWING NO. 12712793
SHEET 27 OF 296
C-508

DRAWFORM REVISION: 10 MAY 2014



FILE NAME: Z:\Clients\ANF\USNavy\MGAA\62327_P603MSSFac\Design\Civil\Sheets\C508.dwg LAYOUT NAME: C-508 PLOTTED: Friday, March 18, 2016 - 10:11am USER: kwarrender