NOTES:
1. DRAWINGS NOT TO SCALE. DO NOT SCALE DRAWINGS.
2. ALL FABRICATED METAL COMPONENTS ARE STEEL SHOTBLASTED, ETCHED, PHOSPHATIZED, PREHEATED, AND ELECTROSTATICALLY POWDER-COATED WITH T.G.I.C. POLYESTER POWDER COATINGS. PRODUCTS ARE FULLY CLEANED AND PREHEATED, PREHEATED AND COATED WHILE HOT TO FILL CREVICES AND BUILD COATING FILM. COATED PARTS ARE THEN FULLY CURED TO COATING MANUFACTURER'S SPECIFICATIONS. THE THICKNESS OF THE RESULTING FINISH AVERAGES 8-10 MILS (200-250 MICRONS).
3. THIS PRODUCT MUST BE PERMANENTLY AFFIXED IN THE GROUND. CONSULT YOUR LOCAL CODES FOR REGULATIONS.

SPACING:
24" MIN. FROM EDGE OF PAVEMENT,
36" MIN. SPACING BETWEEN RACKS

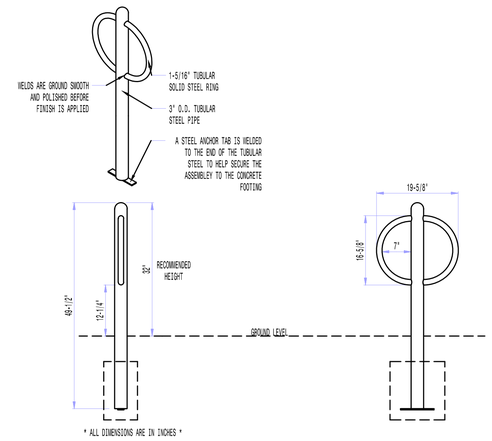

IN-GROUND MOUNTING
COLOR: BLACK POWDER COATING

QTY: 4 DUAL-SIDED BIKE RACKS
CAPACITY: 8 BICYCLES

C1 BICYCLE RACK DETAIL
NTS

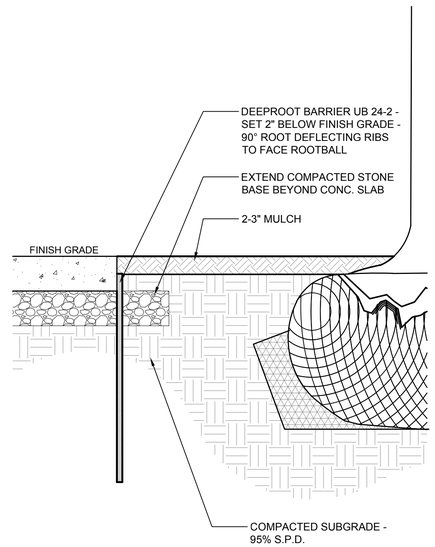

C2 ROOT BARRIER DETAIL
NTS

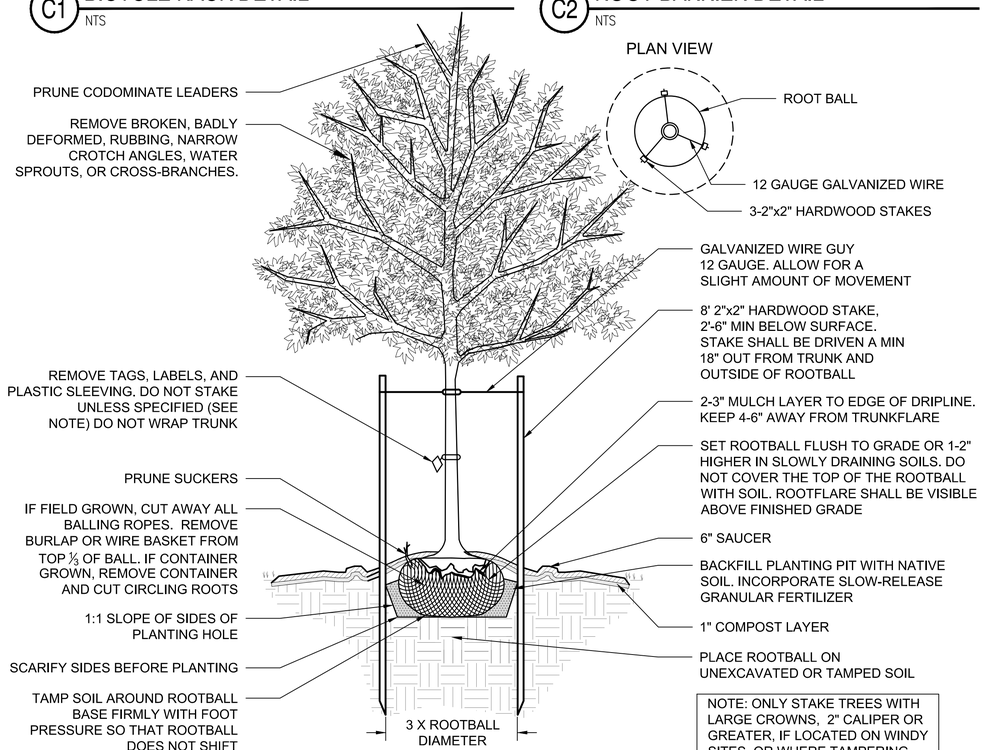

NOTE: ONLY STAKE TREES WITH LARGE CROWNS, 2" CALIPER OR GREATER, IF LOCATED ON WINDY SITES, OR WHERE TAMPERING MAY OCCUR.

A1 DECIDUOUS TREE- STAKING SPECIFIED
NTS

REPLACEMENT TREE CANOPY CALCULATIONS:
- TOTAL CANOPY REMOVED: 12,763 SF
- CANOPY TO BE REPLACED PER WETLAND MITIGATION REQUIREMENTS: 6,215 SF
- **CANOPY TO BE REPLACED PER LANDSCAPE PLAN: 6,548 SF**
- **CANOPY PROVIDED PER LANDSCAPE PLAN: 8,164 SF**
  - 10 *B. NIGRA* AT 314 SF* = 3,140 SF CANOPY
  - 16 *Q. VIRGINIANA* AT 314 SF* = 5,024SF CANOPY

(*PER "VNLA TREE CANOPY SPREAD & COVERAGE AFTER 10 OR 20 YEARS")

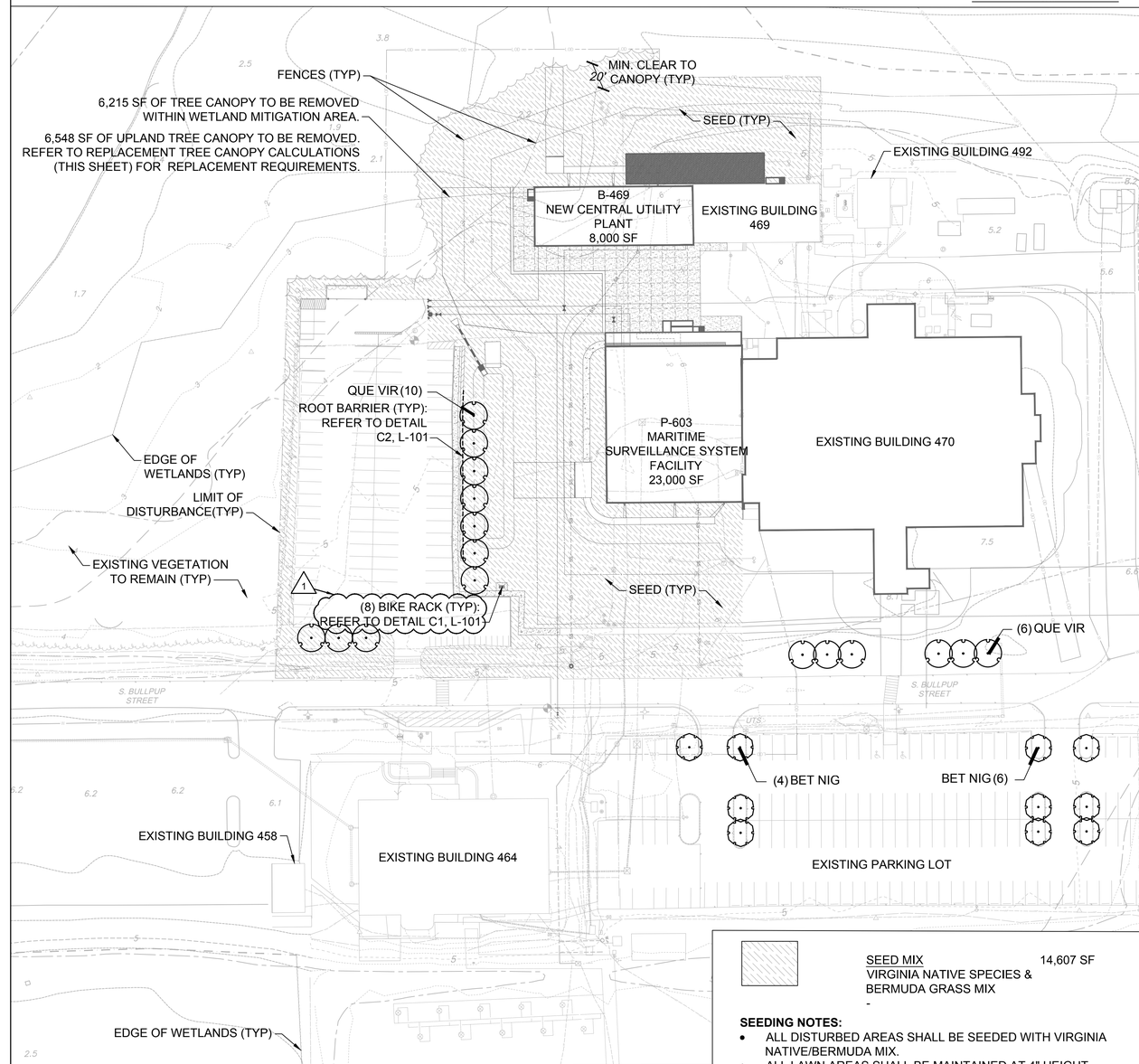

SEED MIX 14,607 SF
VIRGINIA NATIVE SPECIES & BERMUDA GRASS MIX
-

SEEDING NOTES:
- ALL DISTURBED AREAS SHALL BE SEEDED WITH VIRGINIA NATIVE/BERMUDA MIX.
- ALL LAWN AREAS SHALL BE MAINTAINED AT 4" HEIGHT.

VIRGINIA NATIVE / BERMUDA MIX:

FESTUCA RUBRA	40%
FESTUCA LONGIFOLIA 'AURORA"	25%
BERMUDA GRASS	35%

PLAN NORTH

LANDSCAPE PLAN
SCALE: 1 = 50'

0 25' 50' 100'

PLANT SCHEDULE

TREES	QTY	BOTANICAL NAME	COMMON NAME	MINIMUM INSTALLED SIZE	ROOT	REMARKS
BET NIG	10	BETULA NIGRA `DURAHEAT`	DURAHEAT RIVER BIRCH	2.5" CAL	B&B	SINGLE STEM, TREE FORM
QUE VIR	16	QUERCUS VIRGINIANA `HIGHRISE`	LIVE OAK	2.5" CAL	B&B	

TIMMONS GROUP
YOUR VISION ACHIEVED THROUGH OURS.
VIRGINIA | NORTH CAROLINA
THIS DRAWING PREPARED AT THE CORPORATE OFFICE
1001 Boulders Parkway, Suite 300
Richmond, VA 23225
TEL 804.200.6500
FAX 804.560.1016
www.timmons.com
Site Development [Residential] Infrastructure] Technology
35207

STM	DESCRIPTION	DATE	APPR
1	AMENDMENT CHANGES	8/18/16	EGM

NAVFAC

COMMONWEALTH OF VIRGINIA
LUCILLE C. LANIER
Lic. No. 000146
3/18/16
LANDSCAPE ARCHITECT
SEAL

BURNS McDONNELL
1305 EXECUTIVE BLVD.
SUITE 160
CHESAPEAKE, VA 23320
757-548-2056
A/E INFO

APPROVED
FOR COMMANDER NAVFAC
ACTIVITY
SATISFACTORY TO DATE
DES EGM DRW EGM CHK LCL
PM
BRANCH MANAGER
CHIEF ENG/ARCH
<<XXX>>

DEPARTMENT OF THE NAVY
NAVAL FACILITIES ENGINEERING COMMAND
IPT-HAMPTON ROADS
NAVAL FACILITIES ENGINEERING COMMAND ~ MIDLANT
NAVAL STATION NORFOLK
NAS OCEANA-DAM NECK ANNEX
VIRGINIA BEACH, VIRGINIA
P-603 MARITIME SURVEILLANCE SYSTEM FACILITY
LANDSCAPE PLAN

SCALE: AS NOTED
EPROJECT NO.: 1344924
CONSTR. CONTR. NO. N40085-16-R-6119
NAVFAC DRAWING NO. 12712799
SHEET 33 OF 296
L-101

DRAWFORM REVISION: 10 MAY 2014

FILE NAME: S:\310\35207-P-603_Maritime\DWG\Sheet\C0\L-101.dwg LAYOUT NAME: L-101 PLOTTED: Friday, March 18, 2016 - 10:48am USER: eltcom