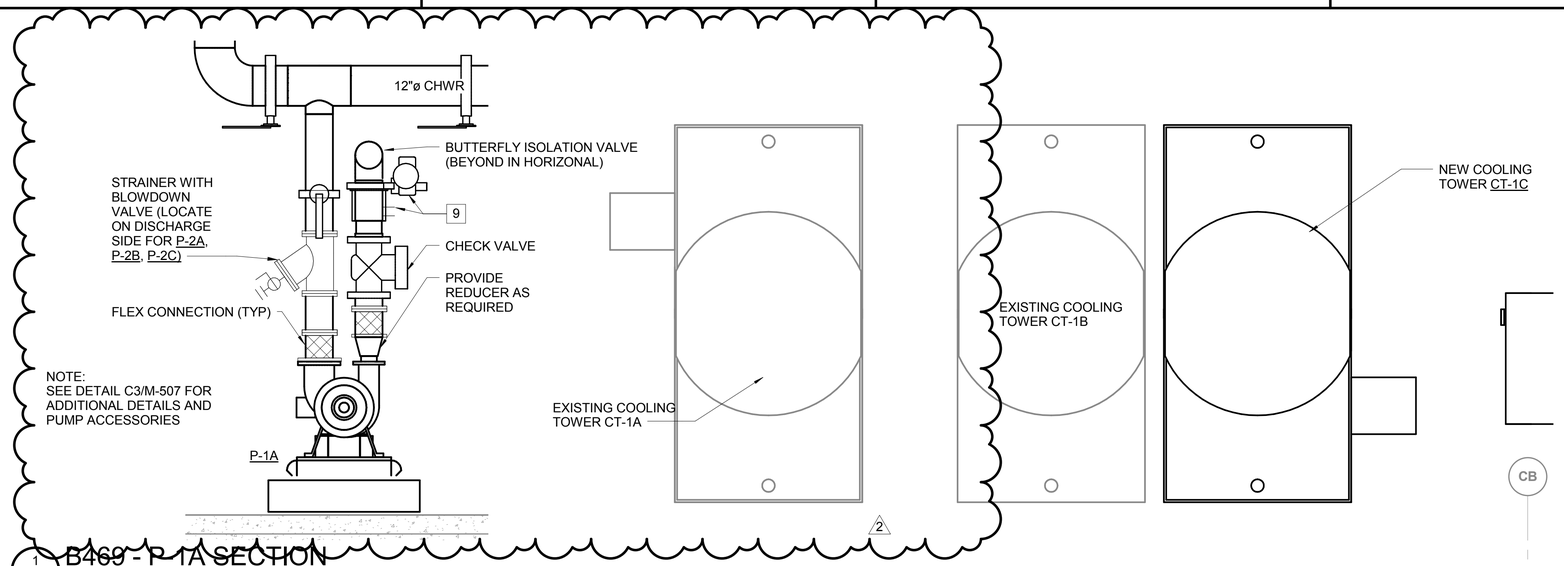

1 M-302 B469 - P-1A SECTION
SCALE: 1/2" = 1'-0"

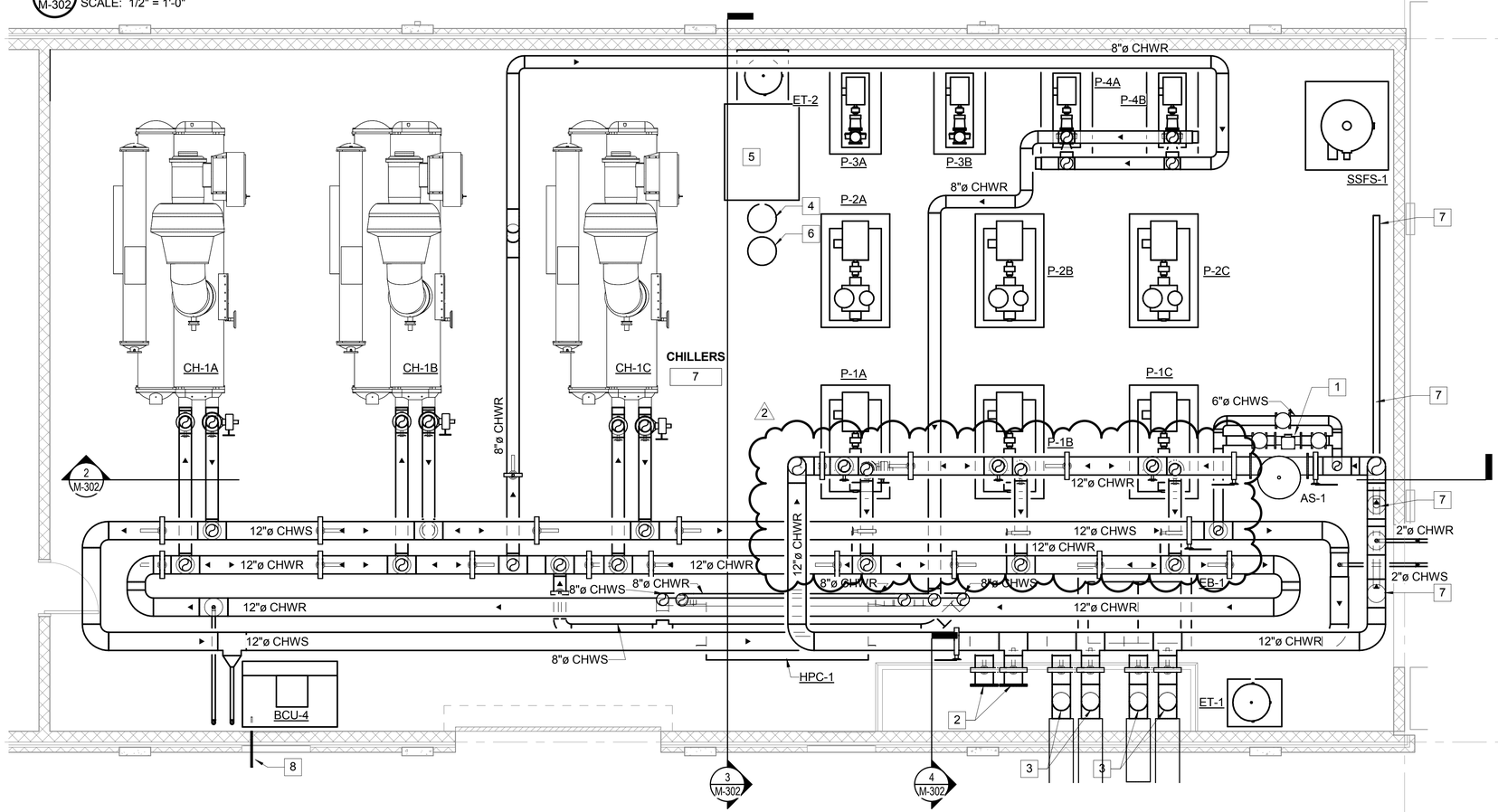

A1 B469 - ENLARGED CHILLED WATER PIPING PLAN
SCALE: 1/4" = 1'-0"

GENERAL NOTES:

1. REFER TO M-001 FOR MECHANICAL ABBREVIATIONS, LEGEND, AND GENERAL NOTES

NEW WORK NOTES:

1. CHILLED WATER BY-PASS VALVE. SELECT VALVE FOR 400 GPM WITH Cv=61.
2. PROVIDE VALVE AND CAP FOR FUTURE CONNECTION.
3. SEE SHEET MS101 FOR SITE ROUTING.
4. CHILLED WATER SHOT FEEDER.
5. CHEMICAL TREATMENT SKID AREA.
6. HEATING-HOT WATER SHOT FEEDER.
7. 4" SIDE STREAM FILTRATION SYSTEM TAPS. TAP PIPE AT 3 O'CLOCK OR 9 O'CLOCK HORIZONTAL POSITIONS. SEPARATE TAPS BY A MINIMUM OF 6'0".
8. DISCHARGE 3/4" CONDENSATE TO SPLASH BLOCK.
9. PROVIDE FLOW CONTROL BALANCING STATION WITH PIEZO RING VENTURI. PROVIDE UNIT SUITABLE FOR ZERO INLET DISTANCE THAT CAN PROVIDE +/- 1% ACCURACY ACROSS PUMP FLOW RANGE.

2

SYM	DESCRIPTION	DATE	APPR
2	AMENDMENT CHANGES	04/05/16	CMG

NAVFAC

COMMONWEALTH OF VIRGINIA
CHRISTIAN M. GUERRA
Lic. No. 047284
04/04/2016
PROFESSIONAL ENGINEER
SEAL

BURNS McDONNELL
1305 EXECUTIVE BLVD.
SUITE 160
CHESAPEAKE, VA 23320
757-548-2056
A/E INFO

APPROVED
FOR COMMANDER NAVFAC / B.L.T.L.
ACTIVITY
SATISFACTORY TO DATE
DES CMG | DRW JLL | CHK JPC
PROJECT MANAGER
IPT TECH. BRANCH HEAD
CHIEF ENG/ARCH

DEPARTMENT OF THE NAVY
NAVAL FACILITIES ENGINEERING COMMAND
IPT-HAMPTON ROADS
NAVAL FACILITIES ENGINEERING COMMAND ~ MIDLANT
NAVAL STATION NORFOLK
NAS OCEANA-DAM NECK ANNEX
VIRGINIA BEACH, VIRGINIA
P-603 MARITIME SURVEILLANCE SYSTEM FACILTY
B469 - ENLARGED CHILLED WATER PIPING PLAN

SCALE: AS NOTED
EPROJECT NO. 1344924
CONSTR. CONTR. NO. N40085-16-R-6119
NAVFAC DRAWING NO. 12712950
SHEET 184 OF 296
M-402

GRAPHIC SCALE:
1/4" =1'-0" 0' 2' 4' 8'
1/2" =1'-0" 0' 1' 2' 4'

FILE NAME: C:\Revit_Projects\82327-P603MSSFac\Models\MEP\82327_M_CUP_cguerra.rvt
REV/DATE: 4/6/2016 11:28:38 AM

DRAWFORM REVISION: 10 MAY 2014

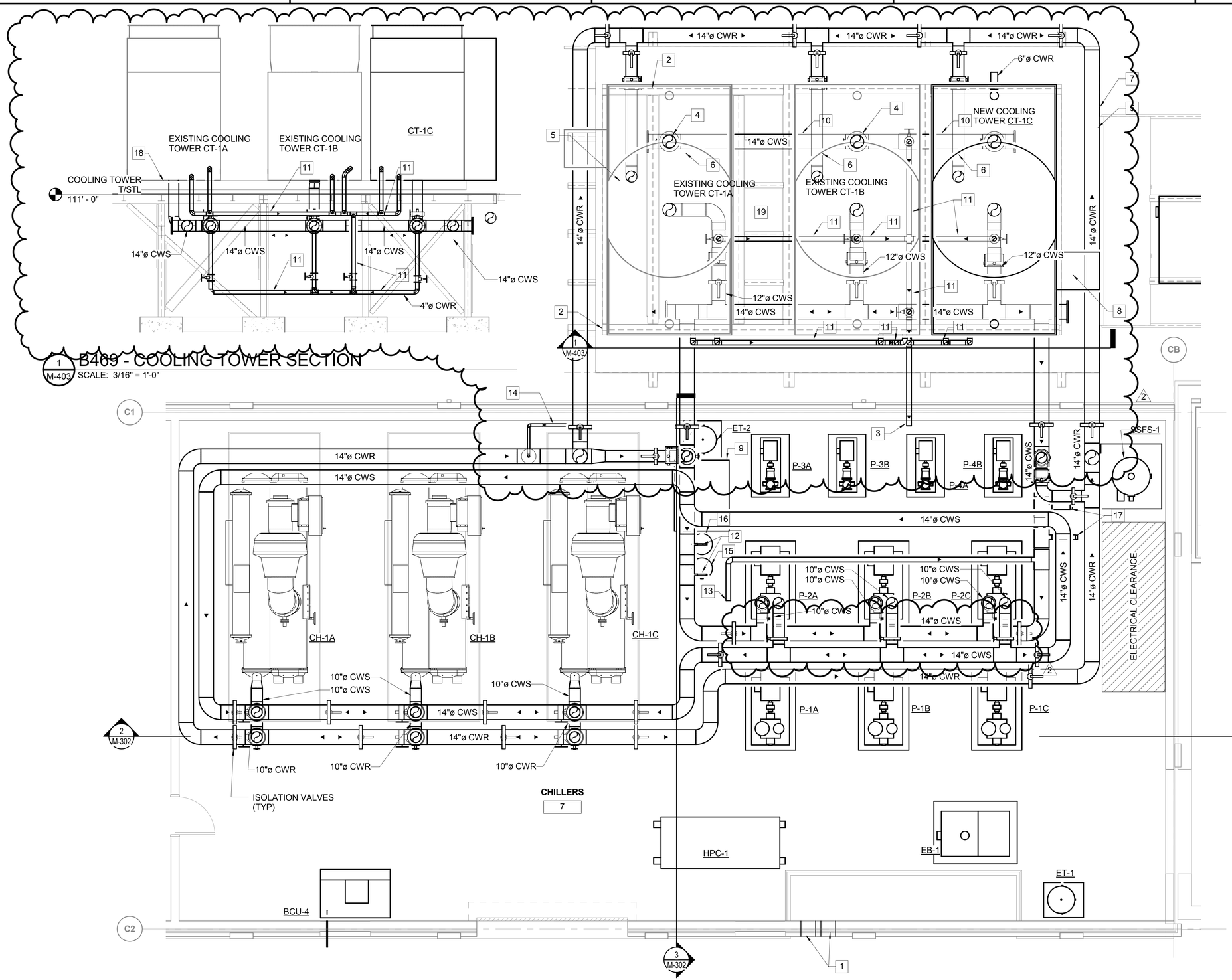

1 M-403 B469 - COOLING TOWER SECTION
SCALE: 3/16" = 1'-0"

A1 B469 - ENLARGED CONDENSER WATER PIPING PLAN
SCALE: 1/4" = 1'-0"

GENERAL NOTES:

1. REFER TO M-001 FOR MECHANICAL ABBREVIATIONS, LEGEND, AND GENERAL NOTES
2. ENGAGE MARLEY FACTORY REPRESENTATIVE FOR MODIFICATION TO EXISTING COOLING TOWERS.
3. PROVIDE HEAT TRACING AND 2" OF MINERAL WOOL INSULATION WITH ALUMINUM JACKET FOR ALL EXTERIOR CONDENSER WATER AND DRAIN PIPING. HEAT TRACING SHALL MAINTAIN FLUID AT A TEMPERATURE OF 40 DEG F AT AN EXTERIOR TEMPERATURE OF 15 DEG F. ALL HEAT TRACING SHALL TERMINATE IN A SINGLE HEAT TRACE CONTROL PANEL.

NEW WORK NOTES:

1. PROVIDE TWO 18" CAST IN PLACE SLEEVES TO HOUSE TWO 14" PIPES IN PIT. PROVIDE PLUG IN SLEEVES TO MAINTAIN WATER-TIGHT PIT.
2. MOUNT COOLING TOWERS ON COMMON W12x40 RAILS. PROVIDE VIBRATION ISOLATION TO ANTICIPATE A MINIMUM FANS PEED OF 540 RPM.
3. 4" DRAIN TO FLOOR DRAIN.
4. PROVIDE 12" BALANCE PORT INLET INTO EXISTING BASIN.
5. PITCH PIPE BACK TO BUILDING AT 1/8" PER FOOT.
6. PROVIDE DISCHARGE CONE FOR EACH EXISTING COOLING TOWER.
7. NEW COOLING TOWER PLATFORM. COORDINATE WITH STRUCTURAL.
8. PROVIDE MANUFACTUER'S ACCESS LADDER ON EACH END AND FULL PERIMETER HAND RAILING.
9. CHEMICAL TREATMENT SKID AREA.
10. PROVIDE 14" BALANCE HEADER.
11. 4" DRAIN PIPING. PITCH PIPE BACK TO BUILDING AT 1/8" PER FOOT. PROVIDE GATE VALVE AT ALL CONNECTIONS EXCEPT THE BASIN OVERFLOWS.
12. CHEMICAL TREATMENT DOSING TAPS
13. 4" MAKEUP WATER LINE. SEE PLUMBING FOR CONTINUATION.
14. 2" BLOWDOWN LINE TO DRAIN.
15. HEATING-HOT WATER SHOT FEEDER.
16. CHILLED WATER SHOT FEEDER.
17. 4" SIDE STREAM FILTRATION SYSTEM TAPS. TAP PIPE AT 3 O'CLOCK OR 9 O'CLOCK HORIZONTAL POSITIONS. SEPARATE TAPS BY A MINIMUM OF 6'0"
18. PROVIDE COMMON W-FLANGE BASE FRAME FOR COOLING TOWERS. PROVIDE RESTRAINED SPRING ISOLATORS TO SUPPORT THE TOTAL WEIGHT OF THE OPRATING SYSTEM AND PROVIDE SPECIFIED DEFELECTION. COORDINATE FRAME WITH TOWER MANUFACTURER.
19. PROVIDE CATWALK GRATING ON TOP OF TOWER RAILS BETWEEN CT-1A & CT-1B. MAINTAIN 48 INCHES ACCESS ROOM BETWEEN TOWERS.

GRAPHIC SCALE:

1/4" =1'-0" 0' 2' 4' 8'

3/16" =1'-0" 0' 4' 8' 12'

SYM	DESCRIPTION	DATE	APPR
2	AMENDMENT CHANGES	04/05/16	CMG

NAVFAC

COMMONWEALTH OF VIRGINIA
CHRISTIAN M. GUERRA
Lic. No.047284
04/04/2016
PROFESSIONAL ENGINEER
SEAL

BURNS McDONNELL
1305 EXECUTIVE BLVD.
SUITE 160
CHESAPEAKE, VA 23320
757-548-2056
A/E INFO

APPROVED
FOR COMMANDER NAVFAC / B.L.T.L.
ACTIVITY
SATISFACTORY TO DATE
DES CMG DRW JLL CHK JPC
PROJECT MANAGER
IPT TECH. BRANCH HEAD
CHIEF ENG/ARCH

DEPARTMENT OF THE NAVY
NAVAL FACILITIES ENGINEERING COMMAND
IPT-HAMPTON ROADS
NAVAL FACILITIES ENGINEERING COMMAND ~ MIDLANT
NAVAL STATION, NORFOLK
NAS OCEANA-DAM NECK ANNEX
VIRGINIA BEACH, VIRGINIA
P-603 MARITIME SURVEILLANCE SYSTEM FACILTY
B469 - ENLARGED CONDENSER WATER PIPING PLAN

SCALE: AS NOTED
EPROJECT NO. 1344924
CONSTR. CONTR. NO. N40085-16-R-6119
NAVFAC DRAWING NO. 12712951
SHEET 185 OF 296
M-403

DRAWFORM REVISION: 10 MAY 2014

FILE NAME: C:\Revit_Projects\82327-P603MSSFac\Models\MEP\82327_M_CUP_cguerra.rvt
REVDATE: 4/6/2016 11:28:41 AM

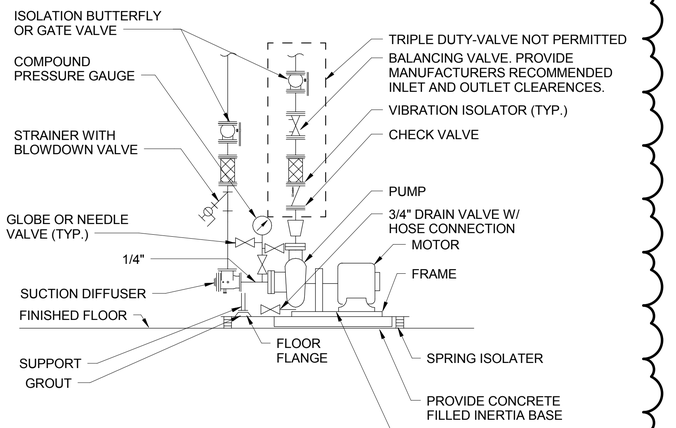

NOTE:
1. TRIPLE DUTY TYPE BALANCING VALVES ARE PROHIBITED.

C1 CENTRIFUGAL PUMP - (END SUCTION)
SCALE: NOT TO SCALE

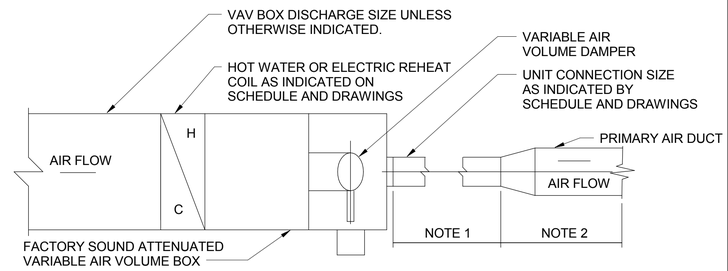

NOTES:
1. INLET DUCT TO BE UNIT CONNECTION SIZE WITH A MINIMUM OF 6 TO 8 DUCT DIAMETERS OF STRAIGHT DUCT.
2. BRANCH CONNECTING DUCT TO BE 2 SIZES LARGER THAN UNIT CONNECTION.
3. NO FLEXIBLE DUCTWORK ON UNIT INLET OR BRANCH CONNECTING DUCT IS ALLOWED.

C2 VARIABLE AIR VOLUME BOX
SCALE: NOT TO SCALE

GENERAL NOTES:

1. REFER TO SHEET M-001 FOR MECHANICAL GENERAL NOTES, LEGEND, AND ABBREVIATIONS.

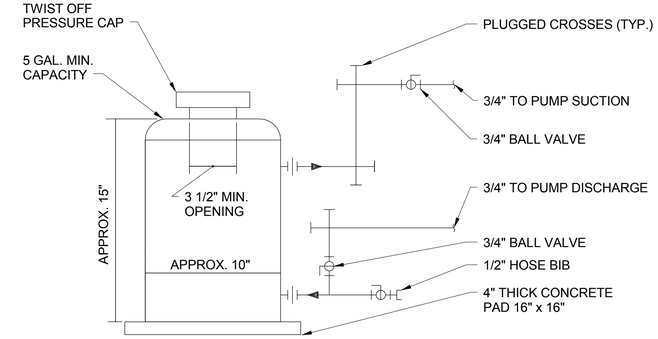

C4 SHOT FEEDER
SCALE: NOT TO SCALE

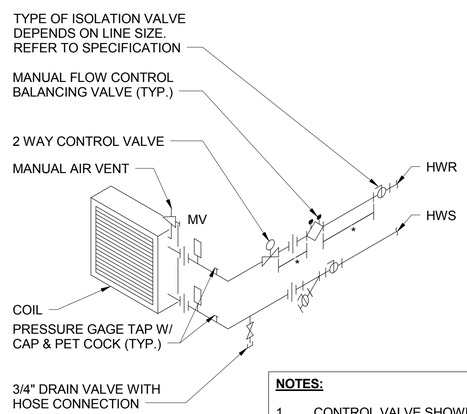

* STRAIGHT LENGTHS OF UNOBSTRUCTED PIPE WITHOUT INLINE APPURTENANCES SHALL BE INSTALLED UP AND DOWNSTREAM OF FLOW CONTROL BALANCING VALVES PER MFGR. INSTALLATION INSTRUCTIONS.

NOTES:
1. CONTROL VALVE SHOWN WITH MOTOR OPERATOR. MAY BE A DIAPHRAM ORSOLENOID OPERATOR.
2. BALANCING VALVE CAN BE ELIMINATED IF PRESSURE INDEPENDENT CONTROL CONTROL VALVE IS PROVIDED

A1 HOT WATER SINGLE COIL W/ 2-WAY VALVE
SCALE: NOT TO SCALE

MAX DOOR SIZE	NO. OF HINGES	NO. OF HINGES	SHEET METAL GAGE THICKNESS		
			DOOR	BACK	FRAME
305 x 305 (12" x 12")	2	1	26	26	24
405 x 405 (16" x 16")	2	2	24	26	22
610 x 610 (24" x 24")	3	2	22	26	22

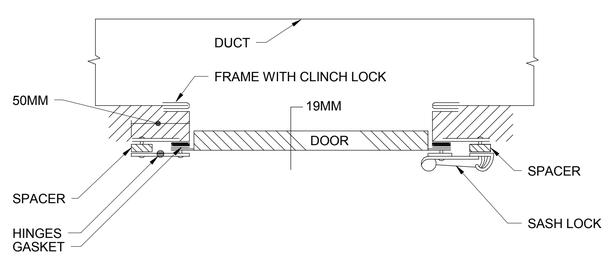

A2 ACCESS DOOR IN DUCTWORK
SCALE: NOT TO SCALE

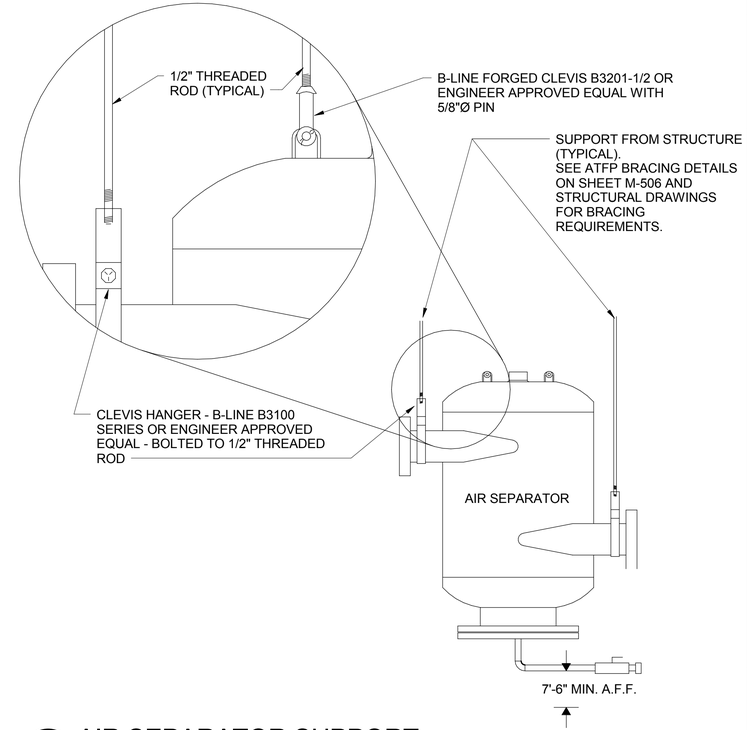

A4 AIR SEPARATOR SUPPORT
SCALE: NOT TO SCALE

SYM	DESCRIPTION	DATE	APPR
2	AMENDMENT CHANGES	04/05/16	CMG

NAVFAC

COMMONWEALTH OF VIRGINIA
CHRISTIAN M. GUERRA
Lic. No. 047284
04/04/2016
PROFESSIONAL ENGINEER
SEAL

BURNS McDONNELL
1305 EXECUTIVE BLVD.
SUITE 160
CHESAPEAKE, VA 23320
757-548-2056
A/E INFO

APPROVED
FOR COMMANDER NAVFAC / B.L.T.L.
ACTIVITY
SATISFACTORY TO DATE
DES CMG | DRW JLL | CHK JPC
PROJECT MANAGER
IPT TECH. BRANCH HEAD
CHIEF ENG/ARCH

DEPARTMENT OF THE NAVY
NAVAL FACILITIES ENGINEERING COMMAND
NAVAL FACILITIES ENGINEERING COMMAND ~ MIDLANT
NAVAL STATION NORFOLK
IPT-HAMPTON ROADS
NAS OCEANA-DAM NECK ANNEX
VIRGINIA BEACH, VIRGINIA
P-603 MARITIME SURVEILLANCE SYSTEM FACILTY
MECHANICAL DETAILS

SCALE: AS NOTED
EPROJECT NO. 1344924
CONSTR. CONTR. NO. N40085-16-R-6119
NAVFAC DRAWING NO. 12712954
SHEET 188 OF 296
M-502

DRAWFORM REVISION: 10 MAY 2014

FILE NAME: C:\Revit_Projects\82327-P603MSSFac\Models\MEP\82327_M_603_cguerra.rvt
REV/DATE: 4/6/2016 11:06:12 AM

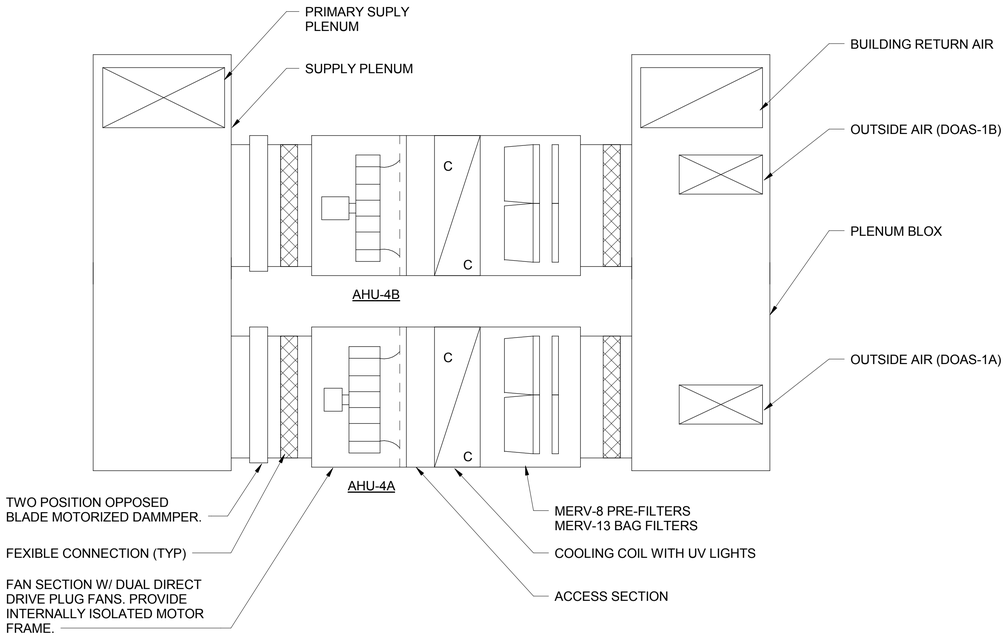

C1 AHU-4A & AHU-4B LAY-OUT DETAIL

SCALE: NOT TO SCALE

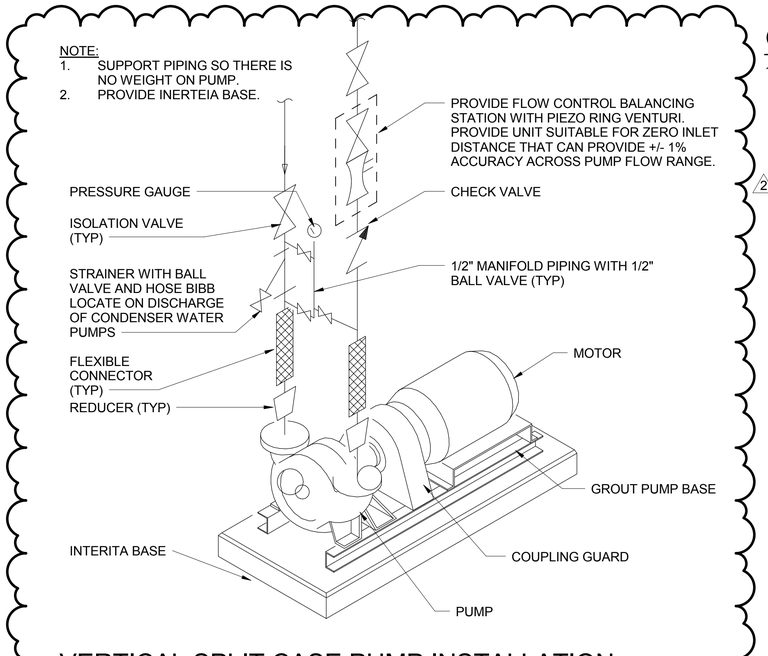

C3 VERTICAL SPLIT CASE PUMP INSTALLATION DETAIL

SCALE: NOT TO SCALE

GENERAL NOTES:

1. REFER TO SHEET M-001 FOR MECHANICAL GENERAL NOTES, LEGEND, AND ABBREVIATIONS.

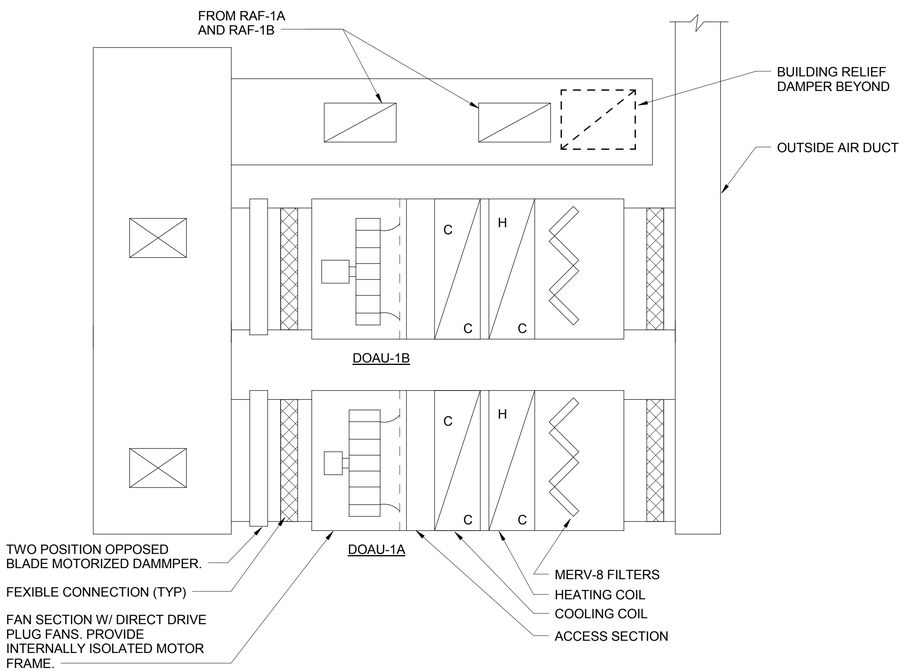

A1 DOAU- 1A & 1B LAYOUT DETAIL

SCALE: NOT TO SCALE

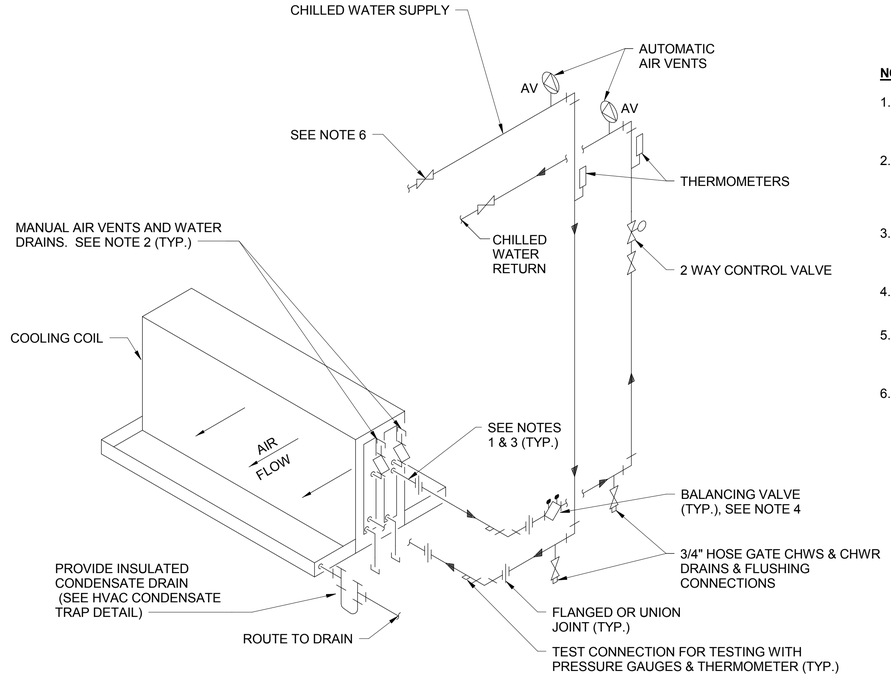

NOTES:

1. ALL COOLING COILS SHALL BE PIPED FOR COUNTER FLOW ARRANGEMENT. (CHILLED WATER ENTERS NEAREST COIL FACE WHERE COLD AIR LEAVES.)
2. ALL COIL DRAIN AND VENT CONNECTIONS TO BE INSTALLED THROUGH HVAC UNIT CASING TO PERMIT COMPLETE DRAINAGE AND VENTING OF COILS FROM OUTSIDE OF UNIT.
3. LOCATE VALVES & FLANGES SO THAT PIPING CAN BE DISCONNECTED AND COILS WITHDRAWN IN COIL REMOVAL SPACE.
4. COIL BANKS WITH A SINGLE COIL DO NOT REQUIRE INDIVIDUAL COIL BALANCING VALVE.
5. CONDENSATE DRAIN PIPING SIZE SHALL BE EQUAL TO THE DRAIN PAN CONNECTION SIZE AND HAVE LOOP SEAL TRAPS AS INDICATED.
6. TYPE OF ISOLATION VALVE DEPENDS ON LINE SIZE. REFER TO SPECIFICATIONS.

A3 CHILLED WATER COIL DETAIL WITH 2-WAY VALVE

SCALE: NOT TO SCALE

SYM	DESCRIPTION	DATE	APPR
2	AMENDMENT CHANGES	04/05/16	CMG

NAVFAC

COMMONWEALTH OF VIRGINIA
CHRISTIAN M. GUERRA
Lic. No. 047284
04/04/2016
PROFESSIONAL ENGINEER
SEAL

BURNS McDONNELL
1305 EXECUTIVE BLVD.
SUITE 160
CHESAPEAKE, VA 23320
757-548-2056
A/E INFO.

APPROVED
FOR COMMANDER NAVFAC / B.L.T.L.
ACTIVITY
SATISFACTORY TO DATE
DES CMG | DRW JLL | CHK JPC
PROJECT MANAGER
IPT TECH. BRANCH HEAD
CHIEF ENG/ARCH

DEPARTMENT OF THE NAVY
NAVAL FACILITIES ENGINEERING COMMAND
IPT-HAMPTON ROADS
NAVAL FACILITIES ENGINEERING COMMAND ~ MIDLANT
NAVAL STATION NORFOLK
NAS OCEANA-DAM NECK ANNEX
VIRGINIA BEACH, VIRGINIA
P-603 MARITIME SURVEILLANCE SYSTEM FACILTY
MECHANICAL DETAILS

SCALE: AS NOTED
EPROJECT NO. 1344924
CONSTR. CONTR. NO. N40085-16-R-6119
NAVFAC DRAWING NO. 12712959
SHEET 193 OF 296
M-507

DRAWFORM REVISION: 10 MAY 2014

FILE NAME: C:\Revit_Projects\82327-P603MSSFac\Models\MEP\82327_M_603_cguerra.rvt
REVDATE: 4/6/2016 11:06:12 AM

AIR HANDLING UNIT (AHU) & GENERATOR SUPPLY FAN (GSF) SCHEDULE 1/2

MARK	LOCATION	MAX. AIRFLOW (CFM)	OUTSIDE AIRFLOW (CFM)	SUPPLY FAN: EXT. STATIC PRESSURE (IN WC)	SUPPLY FAN: FAN QUANTITY	SUPPLY FAN: FAN MOTOR (HP)	SUPPLY FAN: DRIVE TYPE	SUPPLY FAN: SPEED CONTROL TYPE	SUPPLY FAN: MOTOR RPM	SUPPLY FAN: MOTOR TYPE	SUPPLY FAN ELECTRICAL: VOLTS	SUPPLY FAN ELECTRICAL: PHASE	SUPPLY FAN ELECTRICAL: FLA	ELECTRICAL: MCA	ELECTRICAL: MOCP	SUPPLY FAN DISCHARGE SOUND dB OCTAVE (MAX): 63	125	250	500	1K	2K	4K	8K
AHU-4A	603	13680	3840	3.0	2	12.5	DIRECT	VFD	1800	ODP	460	3	30.8	30.8	69.3	85	88	92	87	86	83	81	78
AHU-4B	603	13680	3840	3.0	2	12.5	DIRECT	VFD	1800	ODP	460	3	30.8	30.8	69.3	85	88	92	87	86	83	81	78
GSF-1	CUP	79400	79400	1.0	6	20	DIRECT	VFD	1800	ODP	460	3	30.8	38.5	69.3	-	-	-	-	-	-	-	-

AIR HANDLING UNIT (AHU) & GENERATOR SUPPLY FAN (GSF) SCHEDULE 2/2

MARK	COOLING COIL: EAT DB (°F)	EAT WB (°F)	LAT DB (°F)	LAT WB (°F)	TOTAL CAPACITY (MBH)	SENSIBLE CAPACITY (MBH)	MAX FACE VELOCITY (FPM)	EWT (°F)	LWT (°F)	CHW FLOWRATE (GPM)	MAX WATER PRESSURE DROP (FT W.C.)	FILTER: TYPE	DIRTY FILTER PRESSURE DROP (IN WC)	MAX WEIGHT (LBS)	NOTES
AHU-4A	77.0	63.2	50.6	50.4	498.0	396.7	500	45	55	99.3	16.0	MERV 13	0.75	4000	1,2,4
AHU-4B	77.0	63.2	50.6	50.4	498.0	396.7	500	45	55	99.3	16.0	MERV 13	0.75	4000	1,2,4
GSF-1	0.0	0	0	0	0.0	0	0	0	0	0.0	0.0	MERV 8	0.75	15000	3,5

NOTES:
1. UNIT SHALL BE EQUIPPED WITH ULTRAVIOLET DISINFECTION SECTION. PROVIDE INTERLOCK SWITCHES AT ALL ACCESS DOOR OPENINGS TO SHUT DOWN ULTRAVIOLET DISINFECTION SYSTEM LIGHTS UPON DOOR OPENING.
2. PROVIDE FACTORY APPLIED COIL COATING SYSTEM CERTIFIED TO WITHSTAND A 500 HOUR SALT-SPRAY FOG TEST.
3. "0" VALUES IN SCHEDULE INDICATE NOT APPLICABLE.
4. PROVIDE SINGLE VFD TO RUN BOTH 12.5 HP FANS.
5. PROVIDE SIX (6) FAN ARRAY AND INDIVIDUAL VFD FOR EACH FAN. PROVIDE WITH MANUFACTURERS CUSTOM ROOF CURB THAT ACCOUNTS FOR DOUBLE ROOF PITCH. SEE ARCHITECTURAL FOR DETAILS.

BOILER SCHEDULE

MARK	LOCATION	TYPE	EWT (°F)	LWT (°F)	WATER FLOWRATE (GPM)	MINIMUM GROSS OUTPUT (KW)	VOLTS	PHASE	NOTES
EB-1	CUP	ELECTRIC	90	100	307	450	480	3	1,2

NOTES:
1. PROVIDE SINGLE POINT ELECTRICAL CONNECTION.
2. PROVIDE 40 STEP CAPACITY CONTROL.

DEDICATED OUTDOOR AIR SYSTEM SCHEDULE (DOAS) 1/2

MARK	LOCATION	SUPPLY FAN: TOTAL AIRFLOW (CFM)	EXT. STATIC PRESSURE (IN WC)	FAN MOTOR (HP)	DRIVE TYPE	SPEED CONTROL TYPE	MOTOR RPM	MOTOR TYPE	ELECTRICAL: VOLTS	PHASE	FLA	ELECTRICAL: MCA	MOCP	COOLING COIL: MAX COIL FACE VELOCITY (FPM)	SENSIBLE CAPACITY (MBH)	TOTAL CAPACITY (MBH)	EAT DB (°F)	EAT WB (°F)	LAT DB (°F)	LAT WB (°F)	EWT (°F)	LWT (°F)	CHW FLOWRATE (GPM)	MAX WATER PRESSURE DROP (FT WC)
DOAU-1A	603	3840	1	7.5	BELT	VFD	3500	ODP	460	3	9.4	11.75	21.15	500	140.5	373.3	84	78.6	50.6	50.4	45	55	74.7	14.0
DOAU-1B	603	3840	1	7.5	BELT	VFD	3500	ODP	460	3	9.4	11.75	21.15	500	140.5	373.3	84	78.6	50.6	50.4	45	55	74.7	14.0

DEDICATED OUTDOOR AIR SYSTEM SCHEDULE (DOAS) 2/2

MARK	HEATING COIL: MAX COIL FACE VELOCITY (FPM)	TOTAL CAPACITY (MBH)	EAT DB (°F)	LAT DB (°F)	EWT (°F)	LWT (°F)	HHW FLOWRATE (GPM)	MAX WATER PRESSURE DROP (FT WC)	FILTER: TYPE	DIRTY FILTER PRESSURE DROP (IN WC)	MAX WEIGHT (LBS)	NOTES
DOAU-1A	500	141.4	21	55	100	90	28.3	2.0	MERV 8	0.75	1700	1
DOAU-1B	500	141.4	21	55	100	90	28.3	2.0	MERV 8	0.75	1700	1

NOTES:
1. PROVIDE FACTORY APPLIED COIL COATING SYSTEM CERTIFIED TO WITHSTAND A 3,000 HOUR SALT-SPRAY FOG TEST.

PENTHOUSE LOUVER SCHEDULE

MARK	VOLUME CFM	STATIC PRESSURE (IN WG)	THROAT AREA (FT2)	THROAT VELOCITY (FT / MIN)	THROAT WIDTH (IN)	THROAT LENGTH (IN)	LOUVER HEIGHT (IN)	LOUVERS HIGH	FREE AREA (FT2)	WEIGHT (LB)	NOTES
PHL-1	4100	0.13	7.11	577	32	32	20	5	8.75	185	1

NOTES:
1. PROVIDE 32x32 PARALLEL BLADE DAMPER WITH UNIT.

COOLING TOWER SCHEDULE (CT)

MARK	LOCATION	TYPE	FLOW RATE (GPM)	EWT (°F)	LWT (°F)	WB (°F)	MAXIMUM RATE OF DRIFT (% OF FLOW RATE)	MOTOR - MAX (HP)	SPEED CONTROL TYPE	VOLTS	PHASE	FREQUENCY (HZ)	STARTER / DISCONNECT PROVIDED BY	BASIN HEATER: KW	VOLTS	PHASE	MAX OPERATING WEIGHT (LBS)	NOTES
CT-1A	CUP	INDUCED DRAFT	1305	85	95	78	0.005	25	VFD	460	3	60	DIVISION 26	15	460	3	23000	1, 3
CT-1B	CUP	INDUCED DRAFT	1305	85	95	78	0.005	25	VFD	460	3	60	DIVISION 26	15	460	3	23000	1, 3
CT-1C	CUP	INDUCED DRAFT	1305	85	95	78	0.005	25	VFD	460	3	60	DIVISION 26	15	460	3	23000	2, 4

2

NOTES:
1. EXISTING COOLING TOWER AND BASIN HEATER TO BE RE-USED. PROVIDE VFD DRIVES TO EXISTING UNITS, ENCLOSURES SHALL BE NEMA 4X TYPE.
2. PROVIDE UNIT WITH DISCHARGE CONE AND PIPE CONNECTION, PROVIDE STAINLESS STEEL INLET SCREENS.
3. RETROFIT UNIT WITH FACTORY DISCHARGE CONE AND BALANCE PORT CONNECTION, RETROFIT UNIT FOR BOOTOM INLET AND BALANCE PORT CONNECTIONS, PATCH EXISTING OPENINGS NOT BEING RE-USED.
4. PROVIDE INTERNAL WALKWAY SYSTEM FOR MAINTENANCE.

2

WATER COOLED CHILLER SCHEDULE (CH)

2

MARK	LOCATION	TYPE	COOLING CAPACITY (TONS)	MAX COMPRESSOR INPUT (KW) (NOTE 3)	MAX FULL LOAD EFFICIENCY (KW/TON) (NOTE 4)	MAX IPLV (NOTE 4)	REFRIGERANT TYPE	MAX LBS. OF REFRIGERANT	EVAPORATOR: FLOW (GPM)	EWT (°F)	LWT (°F)	MAX PRESSURE DROP (FT. W.C.)	FOULING FACTOR	NO. OF PASSES	CONDENSER: COND (FLOW)	EWT (°F)	LWT (°F)	MAX PRESSURE DROP (FT WC)	FOULING FACTOR	NO OF PASSES	ELECTRICAL: VOLTS	PHASE	HZ	MCA	MOCP	NOTES
CH-1A	CUP	CENTRIFUGAL	435	234	0.538	0.475	R-123 or R134a	1405	1044	55	45	20.00	0.0001	2	1305	85	97	20.00	0.00025	2	460	3	60	447	623	1,2,5
CH-1B	CUP	CENTRIFUGAL	435	234	0.538	0.475	R-123 or R134a	1405	1044	55	45	20.00	0.0001	2	1305	85	97	20.00	0.00025	2	460	3	60	447	623	1,2,5
CH-1C	CUP	CENTRIFUGAL	435	234	0.538	0.475	R-123 or R134a	1405	1044	55	45	20.00	0.0001	2	1305	85	97	20.00	0.00025	2	460	3	60	447	623	1,2,5

NOTES:
1. PROVIDE SINGLE POINT POWER CONNECTION WITH INTEGRAL DISCONNECT FOR MAIN LINE.
2. PROVIDE 120V POWER CONNECTION WITH INTEGRAL UPS TO MAINTAIN CONTROL SYSTEM OPERATION DURING POWER OUTAGE.
3. COMPRESSOR INPUT VALUE BASED ON SCHEDULED FLOWS AND TEMPERATURES.
4. MAXIMUM FULL LOAD EFFICIENCY AND IPLV VALUES ARE BASED ON AHRI STANDARD 550.
5. CHILLER SHALL REJECT A MAXIMUM OF 1,500 WATTS OF HEAT TO THE SPACE. IF HEAT REJECTION TO THE SPACE IS GREATER THAN 1,500 WATTS., PROVIDE ADDITIONAL COOLING CAPACITY IN BCU-4 TO ACCOMODATE EXCESS HEAT.

DUCT SILENCER SCHEDULE

MARK	W x H OR DIA (IN)	LENGTH	CFM	MAX P.D. IN WC	DYNAMIC INSERTION LOSS dB OCTAVE: 63	125	250	500	1K	2K	4K	8K	NOTES
DS-1	30 X 30	60	10510	0.3	3	4	13	25	38	33	23	19	1, 3
DS-2	20	60	3850	0.3	4	4	13	25	39	33	23	19	1, 3
DS-3	48 x 24	60	10040	0.3	4	7	18	30	42	30	22	18	2, 3
DS-4	20 x 20	60	2790	0.3	4	6	17	29	41	30	22	16	2, 3

1. PROVIDE SELECTION FOR FORWARD FLOW.
2. PROVIDE SELECTION FOR REVERSE FLOW.
3. PROVIDE ABSORPTIVE SILENCER WITH DOUBLE WALL CASING.

UNIT HEATER SCHEDULE

MARK	INITIAL DEMAND (MBH)	EWT (FT)	LWT (F)	FLOW (GPM)	MAX AP (FT WC)	ELECTRICAL: MOTOR HP	VOLTS	PHASE	Hz
UH-1A	10.2	100	90	1.9	5.0	.125	115	1	60
UH-2A	16.1	100	90	3.2	5.0	.133	115	1	60
UH-3A	54.1	100	90	13.9	5.0	.5	115	1	60
UH-3B	54.1	100	90	13.9	5.0	.5	115	1	60
UH-4A	56.3	100	90	16.8	5.0	.5	115	1	60
UH-4B	56.3	100	90	16.8	5.0	.5	115	1	60

SYM	DESCRIPTION	DATE	APPR
2	AMENDMENT CHANGES	04/05/16	CMG

NAVFAC

COMMONWEALTH OF VIRGINIA
CHRISTIAN M. GUERRA
Lic. No. 047284
04/04/2016
PROFESSIONAL ENGINEER
SEAL

BURNS McDONNELL
1305 EXECUTIVE BLVD.
SUITE 160
CHESAPEAKE, VA 23320
757-548-2056

A/E INFO.

APPROVED
FOR COMMANDER NAVFAC / B.L.T.L.
ACTIVITY
SATISFACTORY TO DATE
DES CMG | DRW JLL | CHK JPC
PROJECT MANAGER
IPT TECH. BRANCH HEAD
CHIEF ENG/ARCH

DEPARTMENT OF THE NAVY
NAVAL FACILITIES ENGINEERING COMMAND
NAVAL FACILITIES ENGINEERING COMMAND - MIDLANT
IPT-HAMPTON ROADS
NAVAL STATION NORFOLK
NAS OCEANA-DAM NECK ANNEX
VIRGINIA BEACH, VIRGINIA
P-603 MARITIME SURVEILLANCE SYSTEM FACILTY
MECHANICAL SCHEDULES

SCALE: AS NOTED
EPROJECT NO. 1344924
CONSTR. CONTR. NO. N40085-16-R-6119
NAVFAC DRAWING NO. 12712960
SHEET 194 OF 296
M-601

DRAWFORM REVISION: 10 MAY 2014

FILE NAME: C:\Revit_Projects\82327-P603MSSFacModels\MEP\82327_M_603_cguerra.rvt
REV/DATE: 4/6/2016 11:06:12 AM

VARIABLE AIR VOLUME BOX SCHEDULE (VAV)

MARK	LOCATION	INLET DIAMETER (IN)	MAX AIRFLOW (CFM)	MIN AIRFLOW (CFM)	MIN INLET PRESS (IN WC)	HOT WATER REHEAT COIL DATA MIN HEAT CAPACITY (MBH)	EAT DB (°F)	LAT DB (°F)	EWT (°F)	LWT (°F)	HOT WATER FLOWRATE (GPM)	SOUND LEVEL (MAX NC)	NOTES
VAV-401	603	6	420	240	0.75	7.0	55	85	100	90	1.4	25	1,2
VAV-402	603	10	920	290	0.75	9.1	55	85	100	90	1.8	25	1,2
VAV-403	603	6	120	55	0.75	2.5	55	85	100	90	0.5	25	1,2
VAV-404	603	6	260	100	0.75	4.2	55	85	100	90	0.8	30	1,2
VAV-405	603	10	690	690	0.75	9.1	55	85	100	90	1.8	30	1,2
VAV-406	603	6	290	120	0.75	3.9	55	85	100	90	0.8	25	1,2
VAV-407	603	6	180	60	0.75	2.5	55	85	100	90	0.5	25	1,2
VAV-408	603	10	770	240	0.75	10.0	55	85	100	90	2.0	30	1,2
VAV-409	603	10	730	190	0.75	5.7	55	85	100	90	1.1	25	1,2
VAV-410	603	10	810	330	0.75	9.7	55	85	100	90	1.9	25	1,2
VAV-411	603	10	720	260	0.75	9.4	55	85	100	90	1.9	30	1,2
VAV-412	603	6	130	40	0.75	2.5	55	85	100	90	0.5	25	1,2
VAV-413	603	6	130	40	0.75	2.5	55	85	100	90	0.5	25	1,2
VAV-414A	603	16	2250	675	0.75	20.0	55	85	100	90	4.0	35	1,2
VAV-414B	603	16	2250	675	0.75	20.0	55	85	100	90	4.0	35	1,2
VAV-414C	603	16	2250	675	0.75	20.0	55	85	100	90	4.0	35	1,2
VAV-415	603	12	1490	1490	0.75	22.7	55	90	100	90	4.5	30	1,2

NOTES:
1. RUNOUT SIZE TO VAV BOX SHALL MATCH VAV INLET DIAMETER UNLESS OTHERWISE SPECIFIED ON DRAWINGS.
2. PROVIDE STEP DOWN CONTROL TRANSFORMER.

DIFFUSER, REGISTER & GRILLE SCHEDULE

MARK	DESCRIPTION	MOUNTING	THROW PATTERN	MATERIAL	NECK SIZE	FACE SIZE	MAX PD (IN WC)	MAX FLOW (CFM)	MAX SOUND (NC)	NOTES
CD-1	PLAQUE FACE CEILING DIFFUSER	T-BAR CEILING	RADIAL	ALUMINUM	6"Ø	24x24	0.08	135	0.08	1, 2, 9
CD-2	PLAQUE FACE CEILING DIFFUSER	T-BAR CEILING	RADIAL	ALUMINUM	8"Ø	24x24	0.08	280	20	1, 2, 9
CD-3	PLAQUE FACE CEILING DIFFUSER	T-BAR CEILING	RADIAL	ALUMINUM	10"Ø	24x24	0.10	400	20	1, 2, 9
DL-1	HIGH CAPACITY DRUM LOUVER	SIDEWALL REGISTER	-	ALUMINUM	6x15	8x16	0.142	375	26	-
EG-1	LOUVER FACE EXHAUST GRILLE	SURFACE	-	ALUMINUM	6x6	8x 8	0.08	90	20	4, 9
EG-2	LOUVER FACE EXHAUST GRILLE	SURFACE	--	ALUMINUM	8x8	10" x 10"	0.08	150	20	4, 9
EG-3	LOUVER FACE EXHAUST REGISTER	SURFACE	-	ALUMINUM	6x6	8 x 8	-	350	-	4, 9
FTG-1	LOUVER FACED TRANSFER GRILLE	SURFACE	--	STEEL	12x12	14x14	0.03	300	-	4, 8, 9
LS-1	INDUSTRAL LOUVER FACED SUPPLY	DUCT / SIDEWALL	2-WAY	ALUMINUM	10"Ø	60x6	-	375	-	4, 9
LV-1	INDUSTRIAL LOUVER FACED SUPPLY	DUCT / SIDEWALL	1-WAY	ALUMINUM	48" x 20"	50 x 22	0.26	7940	50	6, 7, 9
RG-5	HEAVY DUTY RETURN GRILLE	SURFACE	-	ALUMINUM	46x24	48 X 26	0.10	6000	40	5, 9
RR-1	LOUVER FACE RETURN REGISTER	T-BAR CEILING	-	ALUMINUM	22x22	24x24	0.04	750	20	4, 8, 9
RR-2	LOUVER FACE RETURN REGISTER	SURFACE	-	ALUMINUM	36x12	38x14	0.08	1100	20	4, 9
RR-4	LOUVER FACE RETURN REGISTER	SURFACE	-	ALUMINUM	18x10	20x12	0.08	670	30	4, 9
SR-1	LOUVER FACE SUPPLY REGISTER	DUCT / SIDEWALL	2-WAY	ALUMINUM	16 X10	18 x 12	0.08	720	30	3, 9
SR-2	LOUVER FACE SUPPLY REGISTER	DUCT / SIDEWALL	2-WAY	ALUMINUM	12 X10	14 x 12	0.08	550	30	3, 9
TG-1	LOUVER FACED TRANSFER GRILLE	SURFACE	--	ALUMINUM	12x12	14x14	0.03	300	-	4, 9

NOTES:

1. WHERE INDICATED, PROVIDE CLIPS TO ORIENT FLOW (2-WAY) IN THE DIRECTION OF THE HALLWAY.
2. PROVIDE SECTORIZING BAFFLE OR HIGH INDUCTION
3. PROVIDE DOUBLE DEFLECTION WITH 3/4" CENTERS
4. PROVIDE FIXED LOUVERS WITH 0° DEFLECTION AND 3/4" CENTERS
5. PROVIDE FIXED LOUVERS WITH 45° DEFLECTION AND 3/4" CENTERS
6. PROVIDE SINGLE DELECTION 3" AIRFLOW BLADES
7. SELECTION BASED ON 15° BLADE DEFLECTION.
8. PROVIDE UNIT WITH INTEGRAL 1 HOUR FIRE DAMPER.
9. AIR DEVICE RUNOUTS SHALL MATCH NECK SIZE INDICATED ON SCHEDULE UNLESS OTHERWISE NOTED ON DRAWINGS.

EXPANSION TANK SCHEDULE

MARK	LOCATION	SYSTEM	TYPE	TANK VOLUME (GAL)	ACCEPTANCE VOLUME (GAL)	TEMPERATURE RATING (°F)	PRESSURE RATING (PSIG)
ET-1	CUP	CHW	BLADDER	79	79	240	125
ET-2	CUP	HHW	BLADDER	57	57	240	125

COMPUTER ROOM AIR HANDLING UNIT SCHEDULE (CRAHU) 1/2

MARK	LOCATION	AREA SERVED ROOM NAME	ROOM #	FAN TYPE	TOTAL AIRFLOW (CFM)	FAN MOTOR QUANTITY	EXT. STATIC PRESSURE (IN WC)	FAN MOTOR (HP)	COOLING COIL MAX COIL FACE VELOCITY (FPM)	SENSIBLE CAPACITY (MBH)	TOTAL CAPACITY (MBH)	EAT DB (°F)	EAT WB (° F)	LAT DB (°F)	LAT WB (°F)	EWT (°F)	LWT (°F)	CHW FLOWRATE (GPM)	MAX WATER PRESSURE DROP (FT WC)
CRAHU-1A	603	DATA/EQUIP. ROOM	209	DOWNFLOW	3500	1	0.2	5	400	46.0	47.4	72	60	59.7	55.2	45	55	10.3	7.0
CRAHU-1B	603	DATA/EQUIP. ROOM	209	DOWNFLOW	3500	1	0.2	5	400	46.0	47.4	72	60	59.7	55.2	45	55	10.3	7.0
CRAHU-2A	603	EQUIPMENT SPACE	106	DOWNFLOW	19500	3	0.2	10	500	381.9	432.5	72	60	53.8	51.9	45	55	91.4	8.0
CRAHU-2B	603	EQUIPMENT SPACE	106	DOWNFLOW	19500	3	0.2	10	500	381.9	432.5	72	60	53.8	51.9	45	55	91.4	8.0
CRAHU-2C	603	EQUIPMENT SPACE	106	DOWNFLOW	19500	3	0.2	10	500	381.9	432.5	72	60	53.8	51.9	45	55	91.4	8.0
CRAHU-2D	603	EQUIPMENT SPACE	106	DOWNFLOW	19500	3	0.2	10	500	381.9	432.5	72	60	53.8	51.9	45	55	91.4	8.0
CRAHU-2E	603	EQUIPMENT SPACE	106	DOWNFLOW	19500	3	0.2	10	500	381.9	432.5	72	60	53.8	51.9	45	55	91.4	8.0
CRAHU-2F	603	EQUIPMENT SPACE	106	DOWNFLOW	19500	3	0.2	10	500	381.9	432.5	72	60	53.8	51.9	45	55	91.4	8.0

COMPUTER ROOM AIR HANDLING UNIT SCHEDULE (CRAHU) 2/2

MARK	HOT WATER REHEAT COIL DATA MAX COIL FACE VELOCITY (FPM)	TOTAL CAPACITY (MBH)	EAT DB (°F)	LAT DB (°F)	EWT (°F)	LWT (°F)	HHW FLOWRATE (GPM)	MAX WATER PRESSURE DROP (FT WC)	FILTER TYPE	DIRTY FILTER PRESSURE DROP (IN. W.C.)	ELECTRICAL DATA VOLTS	PHASE	HZ	MCA	MOCP	MAX WEIGHT (LBS)	NOTES
CRAHU-1A	400	6.9	55	72	100	90	1.4	10.00	MERV 8	0.75	460	3	60	5.0	15.0	700	1,2,3,4,5,6
CRAHU-1B	400	6.9	55	72	100	90	1.4	10.00	MERV 8	0.75	460	3	60	5.0	15.0	700	1,2,3,4,5,6
CRAHU-2A	500	56.1	55	72	100	90	11.2	10.00	MERV 8	0.75	460	3	60	7.0	15.0	1200	1,2,3,4,5,6
CRAHU-2B	500	56.1	55	72	100	90	11.2	10.00	MERV 8	0.75	460	3	60	7.0	15.0	1200	1,2,3,4,5,6
CRAHU-2C	500	56.1	55	72	100	90	11.2	10.00	MERV 8	0.75	460	3	60	7.0	15.0	1200	1,2,3,4,5,6
CRAHU-2D	500	56.1	55	72	100	90	11.2	10.00	MERV 8	0.75	460	3	60	7.0	15.0	1200	1,2,3,4,5,6
CRAHU-2E	500	56.1	55	72	100	90	11.2	10.00	MERV 8	0.75	460	3	60	7.0	15.0	1200	1,2,3,4,5,6
CRAHU-2F	500	56.1	55	72	100	90	11.2	10.00	MERV 8	0.75	460	3	60	7.0	15.0	1200	1,2,3,4,5,6

NOTES:
1. PROVIDE PLENUM SUPPLY FANS TO BE LOCATED IN RAISED FLOOR SPACE DIRECTLY BELOW UNIT.
2. PROVIDE FACTORY MOUNTED AND WIRED CONDENSATE PUMP.
3. PROVIDE WITH INTEGRAL DISCONNECT SWITCH.
4. PROVIDE MOISTURE SENSOR UNDER EACH UNIT DIRECTLY CONNECTED TO UNIT CONTROLS.
5. PROVIDE SEPARATE CONTROLS CIRCUIT TO BE CONNECTED TO BUILDING UPS POWER. UNIT SHALL SEQUENTIAL AUTO RESTART AT POWER LOSS EVENTS.
6. PROVIDE AN ADDITIONAL WALL MOUNT CONTROLLER THAT PERMITS THE FOLLOWING: INTERCONNECTION OF COOLING UNITS FOR TEAMWORK MODE, DISPLAY TO ALLOW SYSTEM VIEW,AND DISPLAY TO ALLOW VIEW OF EACH INDIVIDUAL UNIT.

2

AIR SEPARATOR SCHEDULE

MARK	SERVICE	LOCATION	INLET SIZE	MAX WATER PRESSURE DROP (FT WC)	MAX OPERATING WEIGHT (LBS)
AS-1	CHW	CUP	12"	1.0	4000
AS-2	HW	CUP	8"	1.0	1500

HEAT PUMP CHILLER SCHEDULE (HPC-1)

MARK	LOCATION	HEATING CAPCITY (MBH)	COOLING CAPCITY (TON)	HEATING COP	REFRIGERANT TYPE	LBS OF REFRIGERANT (PER CIRCUIT)	EVAPORATOR FLOW	EWT	LWT	PRESS DROP	FOULING FACTOR (TYPE)	TYPE	CONDENSER FLOW	EWT	LWT	PRESS DROP	FOULING FACTOR (TYPE)	TYPE	ELECTRICAL VOLTS	PHASE	HZ	MCA	MOCP	NOTES
HPC-1	CUP	2,945	200.7	5.5	R410A	24	481	55	45	17.00	0.0001	BRAZED PLATE	589	90	100	17.00	0.00025	BRAZED PLATE	460	3	60	375	450	1,2

NOTES:
1. PROVIDE SINGLE POINT ELECTRICAL CONNECTION.
2. PROVIDE THREE MODULE (MIN) STACKABLE UNIT.

1

SYM	DESCRIPTION	DATE	APPR
2	AMENDMENT CHANGES	04/05/16	CMG
1	AMENDMENT CHANGES	03/18/16	CMG

NAVFAC

COMMONWEALTH OF VIRGINIA
CHRISTIAN M. GUERRA
Lic. No. 047284
04/04/2016
PROFESSIONAL ENGINEER
SEAL

BURNS McDONNELL
1305 EXECUTIVE BLVD.
SUITE 160
CHESAPEAKE, VA 23320
757-548-2056

A/E INFO

APPROVED
FOR COMMANDER NAVFAC / B.L.T.L.
ACTIVITY
SATISFACTORY TO DATE
DES CMG | DRW JLL | CHK JPC
PROJECT MANAGER
IPT TECH. BRANCH HEAD
CHIEF ENG/ARCH

DEPARTMENT OF THE NAVY
NAVAL FACILITIES ENGINEERING COMMAND
IPT-HAMPTON ROADS
NAVAL FACILITIES ENGINEERING COMMAND ~ MIDLANT
NAVAL STATION, NORFOLK
NAS OCEANA-DAM NECK ANNEX
VIRGINIA BEACH, VIRGINIA
P-603 MARITIME SURVEILLANCE SYSTEM FACILTY
MECHANICAL SCHEDULES

SCALE: AS NOTED
EPROJECT NO. 1344924
CONSTR. CONTR. NO. N40085-16-R-6119
NAVFAC DRAWING NO. 12712961
SHEET 195 OF 296
M-602

DRAWFORM REVISION: 10 MAY 2014

FILE NAME: C:\Revit_Projects\82327-P603MSSFac\Models\MEP\82327_M_603_cguerra.rvt
REV/DATE: 4/6/2016 11:24:38 AM

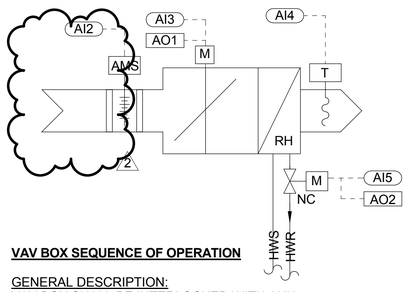

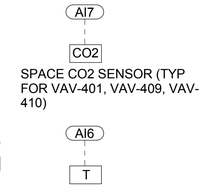

VAV BOX SEQUENCE OF OPERATION

GENERAL DESCRIPTION:
VAV BOX SHALL BE INTERLOCKED WITH AHU

HEATING MODE:
VAV BOX DAMPER SHALL MAINTAIN MINIMUM AIRFLOW. MODULATE HHW CONTROL VALVE TO MAINTAIN HEATING SETPOINT AS MEASURED BY SPACE THERMOSTAT. CLOSE HHW CONTROL VALVE ONCE SETPOINT IS ACHIEVED.

COOLING MODE:
VAV BOX DAMPER SHALL MODULATE TO MAINTAIN COOLING TEMPERATURE SETPOINT AS MEASURED BY SPACE THERMOSTAT.

CO2 SENSOR OPERATION:
UPON A RISE IN CO2 CONCENTRATION LAVEL ABOVE 800PPM (ADJ), THE VAV SHALL MODULATE DAMPER POSITION AS INDICATED BY TABLE BELOW:

CO2 CONCENTRATION LEVEL	DAMPER POSITION
<800 PPM	MINIMUM
800-899 PPM	40%
900-999 PPM	50%
>=1000 PPM	MAXIMUM

ALARMS:
- ALARM DDC WHEN TEMPERATURE SENSED BY SPACE THERMOSTAT IS 3 DEG F OUTSIDE OF HEATING - COOLING TEMPERATURE RANGE.
- ALARM DDC WHEN CO2 LEVEL EXCEEDS 880 PPM (ADJ) FOR 10 MINUTES (ADJ).

MONITOR:
- BOX INLET VELOCITY PRESSURE
- BOX DAMPER POSITION
- HHW VALVE POSITION
- DISCHARGE AIR TEMPERATURE

SET POINTS:
- INITIAL COOLING SETPOINT IS 72 DEG F (ADJUSTABLE)
- INITIAL HEATING SETPOINT IS 68 DEG F (ADJUSTABLE)

VAV BOX - DDC POINTS SCHEDULE 2

INPUTS		OUTPUTS	
AI1	NOT USED	AO1	BOX DAMPER CONTROL
AI2	BOX INLET AIRFLOW	AO2	HHW VALVE CONTROL
AI3	BOX DAMPER POSITION		
AI4	DISCHARGE AIR TEMPERATURE		
AI5	HHW VALVE POSITION		
AI6	SPACE TEMPERATURE		
AI7	SPACE CO2 LEVEL		

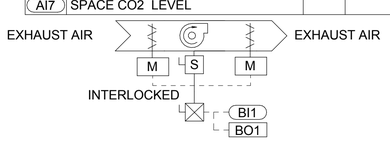

BATHROOM EXHAUST FAN SEQUENCE OF OPERATION (P603)

GENERAL DESCRIPTION:
EXHAUST FAN SERVING BATHROOMS SHALL BE OPERATE 24/7. DAMPERS UPSTREAM AND DOWNSTREAM SHALL BE INTERLOCKED WITH EXHAUST FAN.

LEAD/LAG:
- DDC SYSTEM SHALL SWITCH LEAD FAN AFTER EVERY 336 HRS OF OPERATION.
- UPON FAN FAILURE AS INDICATED BY FAN STATUS, FAILED FAN SHALL BE DE-ENERGIZED AND ASSOCIATED DAMPERS SHALL CLOSE. NEW LEAD FAN SHALL BE ENERGIZED AND ASSOCIATED DAMPERS SHALL OPEN. ALARM DDC PANEL ON FAN FAILURE.

ALARM:
- ALARM DDC UPON FAN FAILURE.

BATHROOM EXHAUST FAN - DDC POINTS SCHEDULE

INPUTS		OUTPUTS	
BI1	FAN STATUS	BO1	SUPPLY FAN START/STOP

1

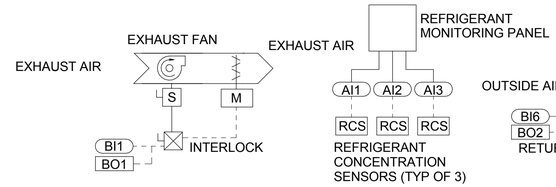

CHILLER ROOM EXHAUST FAN SEQUENCE OF OPERATION

GENERAL DESCRIPTION:
CHILLER ROOM FAN IN ELECTRICAL EQUIPMENT ROOM SHALL BE CONTROLLED BY DDC. EXHAUST AIR DAMPER SHALL BE INTERLOCKED WITH FAN.

NORMAL MODE:
THE EXHAUST FAN SHALL BE ENABLED AND DISABLED BY THE SWITCH AT THE ENTRANCE TO B469.

REFRIGERANT PURGE MODE:
WHEN ANY REFRIGERANT CONCENTRATION SENSOR INDICATES A HIGH REFRIGERANT LEVEL, THE FAN SHALL ENABLE AND OPERATE UNTIL REFRIGERANT CONCENTRATION DROPS.

ALARM:
- ALARM DDC PANEL ON FAN FAILURE.

SETPOINT:
- INITIAL REFRIGERANT SETPOINT TO BE DETERMINED BASED ON REFRIGERANT PROVIDED.

CHILLER ROOM EXHAUST FAN - DDC POINTS SCHEDULE

INPUTS		OUTPUTS	
AI1	REFRIGERANT CONCENTRATION		
AI2	REFRIGERANT CONCENTRATION		
AI3	REFRIGERANT CONCENTRATION		
BI1	EXHAUST FAN STATUS	BO1	EXHAUST FAN HIGH/LOW/OFF

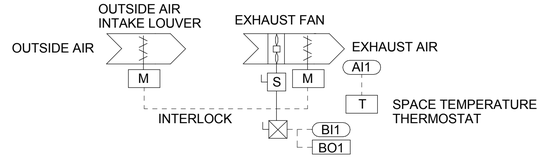

ELEC/MECH EXHAUST FAN SEQUENCE OF OPERATION

GENERAL DESCRIPTION:
EXHAUST FAN IN ELECTRICAL EQUIPMENT ROOM SHALL BE CONTROLLED BY DDC. OUTSIDE AND EXHAUST AIR DAMPERS SHALL BE INTERLOCKED WITH FAN.

COOLING (VENTILATION):
UPON AN INCREASE IN SPACE TEMPERATURE ABOVE THE SETPOINT, THE FAN WILL BE ENERGIZED AND DAMPERS SHALL OPEN. WHEN THE SPACE TEMPERATURE SETPOINT HAS BEEN SATISFIED, THE FAN WILL DE-ENERGIZE AND DAMPERS SHALL CLOSE.

LEAD/LAG:
- DDC SYSTEM SHALL SWITCH LEAD FAN AFTER EVERY 336 HRS OF OPERATION.
- UPON FAN FAILURE AS INDICATED BY FAN STATUS, FAILED FAN SHALL BE DE-ENERGIZED AND ASSOCIATED DAMPERS SHALL CLOSE. NEW LEAD FAN SHALL BE ENERGIZED AND ASSOCIATED DAMPERS SHALL OPEN.

ALARM:
- FAN FAILURE.
- TEMPERATURE EXCEEDS SETPOINT BY MORE THAN 10°F.

SETPOINT:
- INITIAL SETPOINT IS 90 DEG F (ADJ).

ELEC/MECH EXHAUST FAN - DDC POINTS SCHEDULE

INPUTS		OUTPUTS	
AI1	SPACE TEMPERATURE		
BI1	EXHAUST FAN STATUS	BO1	EXHAUST FAN ON/OFF

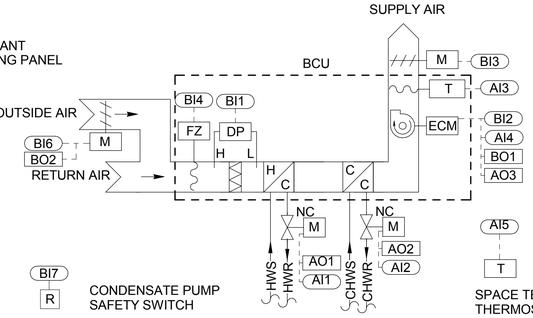

SEQUENCE OF OPERATION - BCU-3

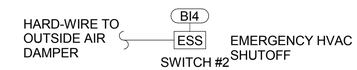

GENERAL DESCRIPTION:

BCU-3 SHALL BE ENABLED THROUGH THE FACILITY DDC ENERGY MANAGEMENT SYSTEM (EMS). BCU-3 IS EXPECTED TO OPERATE CONTINUOUSLY, 24 HOURS PER DAY, 365 DAYS PER YEAR, DURING WHICH IT WILL OPERATE IN THE OCCUPIED MODE.

BCU SHALL HAVE A VARIABLE SPEED FAN, HEATING HOT WATER COIL, CHILLED WATER COOLING COIL, CONTROLLER, AND REQUIRED DAMPERS AND SENSORS. UNIT DISCHARGE DAMPER SHALL BE INTERLOCKED WITH FAN OPERATION. OUTSIDE AIR DAMPER SHALL BE OPEN WHEN THE FAN IS OPERATIONAL.

OCCUPIED MODE:

THE DDC SYSTEM SHALL OPEN THE OUTSIDE AND RETURN AIR DAMPERS TO THEIR MINIMUM POSITIONS. THE SUPPLY AIR DAMPER SHALL BE OPENED. AFTER THE DAMPERS POSITIONS ARE CONFIRMED BY ACTUATOR FEEDBACK SIGNAL, THE SUPPLY FAN SHALL BE ENABLED. THE OUTSIDE AIR DAMPER SHALL BE MODULATED TO MAINTAIN MINIMUM REQUIRED OA FLOW. THE CHILLED WATER AND HOT WATER VALVES SHALL BE MODULATED TO MAINTAIN DISCHARGE AIR TEMPERATURE SETPOINT. DISCHARGE AIR TEMPERATURE SHALL BE DYNAMICALLY RESET.

SUPPLY AIR RESET:
THE SUPPLY FAN SHALL MODULATE TO MAINTAIN ITS DISCHARGE AIR TEMPERATURE SETPOINT. AS COOLING LOAD DECREASES, THE FAN SHALL MODULATE DOWN TO MINIMUM SPEED (30%). AS THE SPACE TEMPERATURE CONTINUES TO FALL BELOW THE COOLING SETPOINT BY 1.0°F (ADJ.) AND THE FAN REMAINS AT MINIMUM SPEED FOR 10 MINUTES (ADJ.). ONCE SPACE TEMPERATURE IS 1.0°F BELOW COOLING SETPOINT FOR 10 MINUTES (ADJ.) THE UNIT SHALL BE IN RESET MODE. THE FAN WILL REMAIN AT MINIMUM SPEED AND SUPPLY AIR RESET SHALL BE ENABLED. AS THE SPACE TEMPERATURE CONTINUES TO DROP TOWARDS HEATING SETPOINT, THE DISCHARGE AIR SETPOINT IS RESET BETWEEN COOLING DISCHARGE AIR SETPOINT AND HEATING DISCHARGE AIR SETPOINT. THE DISCHARGE AIR SETPOINT SHALL BE CALCULATED AND CHANGED EVERY 10 MIN (ADJ.) WHILE THE UNIT IS IN RESET MODE. WHEN THE SPACE TEMPERATURE CONTINUES TO DROP BELOW HEATING SETPOINT, THE FAN SHALL RAMP TO 100% AND HEATING SHALL BE ENABLED. ONCE THE SPACE TEMPERATURE RISES ABOVE THE HEATING SETPOINT BY 1.0°F (ADJ.), HEAT WILL BE DISABLED AND FAN SHALL RAMP DOWN TO MINIMUM SPEED. RESET OF DISCHARGE AIR SETPOINT SHALL OCCUR EVERY 10 MINUTES (ADJ.). THE FAN WILL REMAIN LOW SPEED UNTIL THE SPACE TEMPERATURE RISES 1.0°F (ADJ.) ABOVE THE COOLING SETPOINT FOR AT LEAST 10 MIN (ADJ.). ONCE THE SPACE TEMPERATURE IS 1.0°F (ADJ.) FOR 10 MIN (ADJ.), THE DDC SHALL REVERT BACK TO ITS COOLING DISCHARGE AIR SETPOINT.

COOLING:
THE DDC SHALL MONITOR THE SPACE TEMPERATURE. WHEN THE SPACE TEMPERATURE RISES ABOVE THE COOLING SETPOINT, THE CHW VALVE SHALL MODULATE OPEN. UPON REACHING THE COOLING SETPOINT, THE CHW VALVE SHALL MODULATE CLOSED.

HEATING:
THE DDC SHALL MONITOR THE SPACE TEMPERATURE. WHEN THE SPACE TEMPERATURE FALLS BELOW THE HEATING SETPOINT, THE HHW VALVE SHALL MODULATE OPEN. UPON REACHING THE HEATING SETPOINT, THE HHW VALVE SHALL MODULATE CLOSED.

SETPOINTS:
- INITIAL COOLING SETPOINT IS 78 DEG F (ADJUSTABLE)
- INITIAL HEATING SETPOINT IS 68 DEG F (ADJUSTABLE)

ATFP SHUTDOWN:
UPON RECEIVING A SHUTDOWN SIGNAL FROM ESS (EMERGENCY SHUTDOWN SWITCH #2) THE OUTSIDE DAMPER SHALL CLOSE AND RETURN AIR DAMPER SHALL OPEN FULLY. THE UNIT SHALL CONTINUE TO PROVIDE HEATING AND COOLING TO THE SPACE.

SAFETY SHUTDOWN:
- IF THE MIXED AIR TEMPERATURE AS MEASURED BY FREEZE STAT FALLS BELOW 38°F (ADJUSTABLE) THE FAN SHALL BE DE-ENERGIZED, THE OUTSIDE AIR AND EXHAUST AIR DAMPERS SHALL CLOSE. AN ALARM SHALL BE SENT TO THE OPERATOR WORKSTATION.
- IF THE DUCT STATIC PRESSURE SENSOR DETECTS A STATIC PRESSURE HIGHER THAN 1.5 IN H20 (ADJUSTABLE), THE FAN SHALL STOP, THE DAMPERS WILL RETURN TO THE UNOCCUPIED POSITIONS AND AN ALARM SHALL BE SENT TO THE WORKSTATION. AFTER A 5 MINUTE PERIOD (ADJUSTABLE) THE SYSTEM SHALL RESTART.

ALARMS: AN ALARM WILL BE TRANSMITTED AS INDICATED FOR THE FOLLOWING CONDITIONS:

- SUPPLY FAN FAILURE: COMMANDED ON, BUT THE STATUS IS OFF
- SUPPLY FAN IN HAND: COMMANDED OFF, BUT THE STATUS IS ON
- DAMPER COMMAND FAILURE
- HIGH DISCHARGE TEMPERATURE
- LOW DISCHARGE AIR TEMPERATURE
- HIGH STATIC PRESSURE
- DIRTY FILTERS
- FREEZE CONDITIONS

GENERAL NOTES:

1. REFER TO SHEET M-001 FOR MECHANICAL GENERAL NOTES, LEGEND, AND ABBREVIATIONS.
2. SEE SHEET MI700 FOR CONTROLS LEGEND AND ABBREVIATIONS.

VERTICAL BLOWER COIL UNIT - DDC POINTS SCHEDULE

INPUTS		OUTPUTS	
AI1	HHW VALVE POSITION	AO1	HHW VALVE CONTROL
AI2	CHW VALVE POSITION	AO2	CHW VALUE CONTROL
AI3	DISCHARGE TEMPERATURE	AO3	FAN SPEED CONTROL
AI4	FAN SPEED (FEEDBACK)		
AI5	SPACE TEMPERATURE		
BI1	DIRTY FILTER	BO1	FAN (ON /OFF)
BI2	FAN STATUS	BO2	OA DAMPER
BI3	SA DAMPER (OPEN/CLOSE)		
BI4	FREEZE STAT		
BI5	HVAC ESS		
BI6	OA DAMPER (OPEN/CLOSE)		
BI7	CONDENSATE PUMP SWITCH		

SYM	DESCRIPTION	DATE	APPR
2	AMENDMENT CHANGES	04/05/16	CMG
1	AMENDMENT CHANGES	03/18/16	CMG

NAVFAC

COMMONWEALTH OF VIRGINIA
CHRISTIAN M. GUERRA
Lic. No.047284
04/04/2016
PROFESSIONAL ENGINEER
SEAL

BURNS McDONNELL
1305 EXECUTIVE BLVD.
SUITE 160
CHESAPEAKE, VA 23320
757-548-2056
A/E INFO

APPROVED
FOR COMMANDER NAVFAC / B.L.T.L.
ACTIVITY
SATISFACTORY TO DATE
DES CWS DRW CWS CHK CG
PROJECT MANAGER
IPT TECH. BRANCH HEAD
CHIEF ENG/ARCH

DEPARTMENT OF THE NAVY
NAVAL FACILITIES ENGINEERING COMMAND
IPT-HAMPTON ROADS
NAVAL FACILITIES ENGINEERING COMMAND ~ MIDLANT
NAVAL STATION NORFOLK
NAS OCEANA-DAM NECK ANNEX
VIRGINIA BEACH, VIRGINIA
P-603 MARITIME SURVEILLANCE SYSTEM FACILTY
HVAC CONTROL AND SOO - MISC

SCALE: AS NOTED
EPROJECT NO. 1344924
CONSTR. CONTR. NO. N40085-16-R-6119
NAVFAC DRAWING NO. 12712979
SHEET 213 OF 296
MI705

DRAWFORM REVISION: 10 MAY 2014

UNCLASSIFIED/ /FOR OFFICIAL USE ONLY
FILE NAME: C:\Revit_Projects\82327-P603MSSFac\Models\MEP\82327_M_603_cguerra.rvt
REVDATE: 4/6/2016 11:06:13 AM

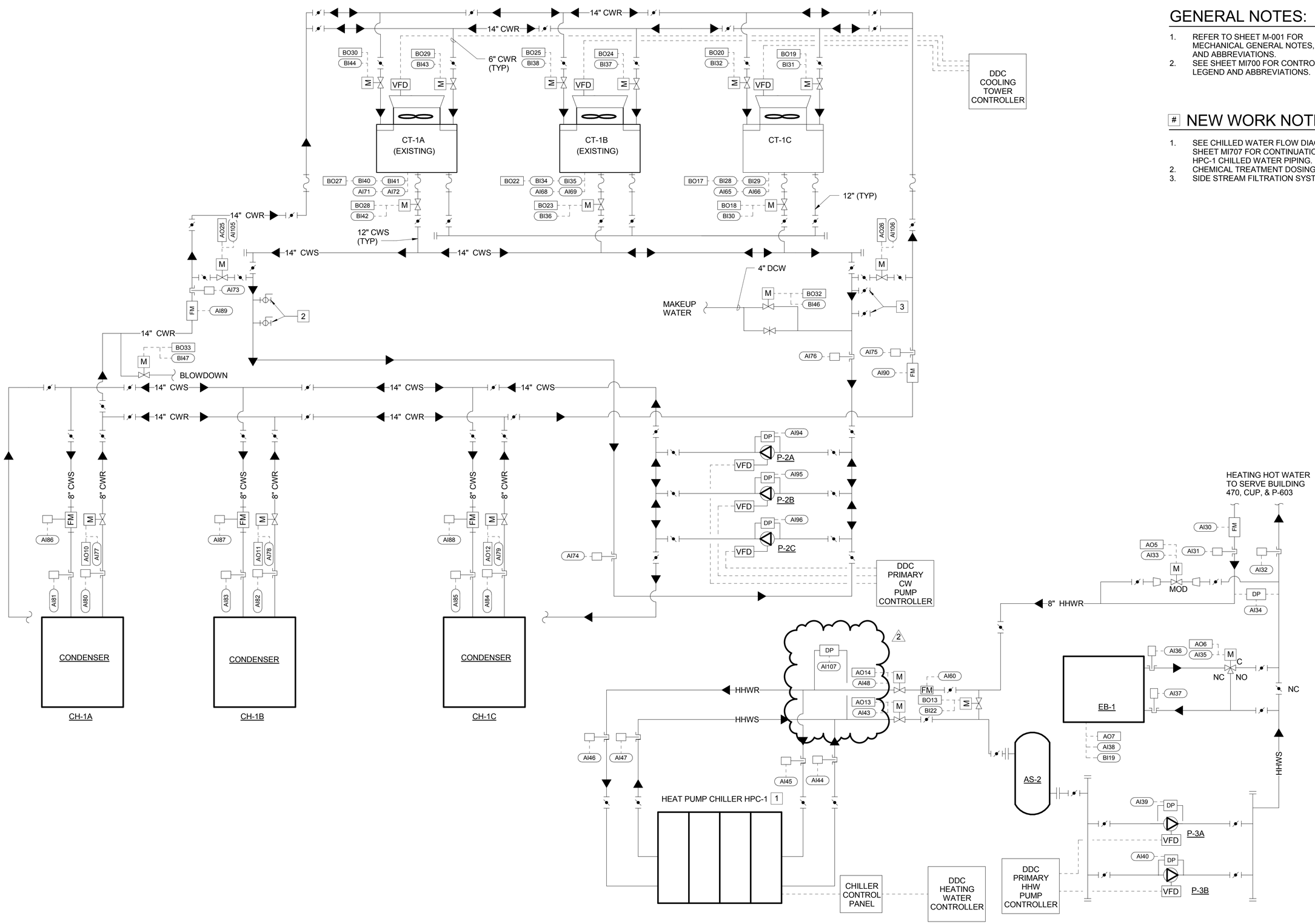

GENERAL NOTES:

1. REFER TO SHEET M-001 FOR MECHANICAL GENERAL NOTES, LEGEND, AND ABBREVIATIONS.
2. SEE SHEET MI700 FOR CONTROLS LEGEND AND ABBREVIATIONS.

NEW WORK NOTES:

1. SEE CHILLED WATER FLOW DIAGRAM SHEET MI707 FOR CONTINUATION FOR HPC-1 CHILLED WATER PIPING.
2. CHEMICAL TREATMENT DOSING TAPS
3. SIDE STREAM FILTRATION SYSTEM TAPS.

SYM	DESCRIPTION	DATE	APPR
2	AMENDMENT CHANGES	04/05/16	CMG

NAVFAC

COMMONWEALTH OF VIRGINIA
CHRISTIAN M. GUERRA
Lic. No. 047284
04/04/2016
PROFESSIONAL ENGINEER
SEAL

BURNS McDONNELL
1305 EXECUTIVE BLVD.
SUITE 160
CHESAPEAKE, VA 23320
757-548-2056

A/E INFO

APPROVED

FOR COMMANDER NAVFAC / B.L.T.L.

ACTIVITY

SATISFACTORY TO DATE

DES	CMG	DRW	JLL	CHK	JPC

PROJECT MANAGER

IPT TECH. BRANCH HEAD

CHIEF ENG/ARCH

DEPARTMENT OF THE NAVY
NAVAL FACILITIES ENGINEERING COMMAND
IPT-HAMPTON ROADS

NAVAL FACILITIES ENGINEERING COMMAND ~ MIDLANT
NAVAL STATION NORFOLK
NAS OCEANA-DAM NECK ANNEX
VIRGINIA BEACH, VIRGINIA

P-603 MARITIME SURVEILLANCE SYSTEM FACILTY

HVAC CONTROL DIAGRAMS - CW PLANT

SCALE: AS NOTED
EPROJECT NO. 1344924
CONSTR. CONTR. NO. N40085-16-R-6119
NAVFAC DRAWING NO. 12712982
SHEET 216 OF 296

MI708

DRAWFORM REVISION: 10 MAY 2014

FILE NAME: C:\Revit_Projects\82327-P603MSSFacModels\MEP\82327_M_603_cguerra.rvt
REV/DATE: 4/6/2016 11:06:13 AM

CHILLER SYSTEM - DDC POINTS SCHEDULE

INPUTS		OUTPUTS	
AI1	CH-1A CHWR TEMPERATURE	AO1	CHW MIN FLOW VALVE POSITION
AI2	CH-1A CHW FLOW	AO2	P-2A VFD SPEED CONTROL
AI3	CH-1A CHWS TEMPERATURE	AO3	P-2B VFD SPEED CONTROL
AI4	CH-1A EVAPORATOR DIFFERENTIAL PRESSURE SENSOR	AO4	P-2C VFD SPEED CONTROL
AI5	CH-1A COMPRESSOR HOURS OF OPERATION	AO5	HHW MIN FLOW VALVE POSITION
AI6	CH-1A LOADING PERCENTAGE	AO6	HHW MIXING VALVE POSITION
AI7	CH-1A POWER	AO7	BOILER POWER
AI8	CH-1B CHWR TEMPERATURE	AO8	P-3A VFD SPEED CONTROL
AI9	CH-1B CHW FLOW	AO9	P-3B VFD SPEED CONTROL
AI10	CH-1B CHWS TEMPERATURE	AO10	CH-1A CW ISO VALVE POSITION
AI11	CH-1B EVAPORATOR DIFFERENTIAL PRESSURE SENSOR	AO11	CH-1B CW ISO VALVE POSITION
AI12	CH-1B COMPRESSOR HOURS OF OPERATION	AO12	CH-1C CW ISO VALVE POSITION
AI13	CH-1B LOADING PERCENTAGE	AO13	HPC-1 HHWS ISO VALVE POSITION
AI14	CH-1B POWER	AO14	HPC-1 HHWR ISO VALVE POSITION
AI15	CH-1C CHWR TEMPERATURE	AO15	HPC-1 CHWS ISO VALVE POSITION
AI16	CH-1C CHW FLOW	AO16	HPC-1 CHWR ISO VALVE POSITION
AI17	CH-1C CHWS TEMPERATURE	AO17	P-1A VFD SPEED CONTROL
AI18	CH-1C EVAPORATOR DIFFERENTIAL PRESSURE SENSOR	AO18	P-1B VFD SPEED CONTROL
AI20	CH-1C COMPRESSOR HOURS OF OPERATION	AO19	P-1C VFD SPEED CONTROL
AI21	CH-1C LOADING PERCENTAGE	AO20	CT-1C VFD SPEED CONTROL
AI22	CH-1C POWER	AO21	CT-1B VFD SPEED CONTROL
AI23	CHWS TEMPERATURE 1	AO22	CT-1A VFD SPEED CONTROL
AI24	CHWR TEMPERATURE 1	AO23	P-4A VFD SPEED CONTROL
AI25	CHW PLANT DIFFERENTIAL PRESSURE SENSOR	AO24	P-4B VFD SPEED CONTROL
AI26	CHW MIN FLOW VALVE (FEEDBACK)	AO25	CHW BYPASS VALVE 1 POSITION
AI27	P-2A VFD ACTUAL SPEED	AO26	CHW BYPASS VALVE 2 POSITION
AI28	P-2B VFD ACTUAL SPEED		
AI29	P-2C VFD ACTUAL SPEED		
AI30	HHW FLOWRATE		
AI31	HHW RETURN TEMPERATURE		
AI32	HHW SUPPLY TEMPERATURE		
AI33	HHW MIN FLOW VALVE (FEEDBACK)		
AI34	HHW DIFFERENTIAL PRESSURE		
AI35	HHW MIXING VALVE (FEEDBACK)		
AI36	BOILER HHW LEAVING TEMPERATURE		
AI37	BOILER HHW ENTERING TEMPERATURE		
AI38	BOILER INPUT POWER (kW)		
AI39	P-3A DIFFERENTIAL PRESSURE		
AI40	P-3B DIFFERENTIAL PRESSURE		
AI41	P-3A VFD ACTUAL SPEED		
AI42	P-3B VFD ACTUAL SPEED		
AI43	HPC-1 HHWS ISO VALVE (FEEDBACK)		
AI44	HPC-1 HHW LEAVING TEMPERATURE 1		
AI45	HPC-1 HHW ENTERING TEMPERATURE 1		
AI46	HPC-1 HHW LEAVING TEMPERATURE 2		
AI47	HPC-1 HHW ENTERING TEMPERATURE 2		
AI48	HPC-1 HHWR ISO VALVE (FEEDBACK)		
AI49	HPC-1 CHWS ISO VALVE (FEEDBACK)		
AI50	HPC-1 CHW LEAVING TEMPERATURE 1		
AI51	HPC-1 CHW ENTERING TEMPERATURE 1		
AI52	HPC-1 CHW LEAVING TEMPERATURE 2		
AI53	HPC-1 CHW ENTERING TEMPERATURE 2		
AI54	HPC-1 CHWR ISO VALVE (FEEDBACK)		
AI55	P-4A VFD ACTUAL SPEED		
AI56	P-4B VFD ACTUAL SPEED		
AI57	P-4A DIFFERENTIAL PRESSURE		
AI58	P-4B DIFFERENTIAL PRESSURE		
AI59	HPC-1 CHW FLOW		
AI60	HPC-1 HHW FLOW		
AI61	P-1A VFD ACTUAL SPEED		
AI62	P-1B VFD ACTUAL SPEED		
AI63	P-1C VFD ACTUAL SPEED		
AI64	CT-1C VFD ACTUAL SPEED		
AI65	CT-1C BASIN LEVEL		
AI66	CT-1C BASIN TEMPERATURE		
AI67	CT-1B VFD ACTUAL SPEED		
AI68	CT-1B BASIN LEVEL		
AI69	CT-1B BASIN TEMPERATURE		
AI70	CT-1A VFD ACTUAL SPEED		
AI71	CT-1A BASIN LEVEL		
AI72	CT-1A BASIN TEMPERATURE		
AI73	CT CW RETURN TEMPERATURE 1		
AI74	CT CW SUPPLY TEMPERATURE 1		
AI75	CT CW RETURN TEMPERATURE 2		
AI76	CT CW SUPPLY TEMPERATURE 2		

CHILLER SYSTEM - DDC POINTS SCHEDULE (CON'T)

INPUTS		OUTPUTS	
AI77	CH-1A CW ISO VALVE (FEEDBACK)		
AI78	CH-1B CW ISO VALVE (FEEDBACK)		
AI79	CH-1C CW ISO VALVE (FEEDBACK)		
AI80	CH-1A CWR TEMPERATURE		
AI81	CH-1A CWS TEMPERATURE		
AI82	CH-1B CWR TEMPERATURE		
AI83	CH-1B CWS TEMPERATURE		
AI84	CH-1C CWR TEMPERATURE		
AI85	CH-1C CWS TEMPERATURE		
AI86	CH-1A CW FLOW		
AI87	CH-1B CW FLOW		
AI88	CH-1C CW FLOW		
AI89	CW FLOW 1		
AI90	CW FLOW 2		
AI91	P-1A DIFFERENTIAL PRESSURE		
AI92	P-1B DIFFERENTIAL PRESSURE		
AI93	P-1C DIFFERENTIAL PRESSURE		
AI94	P-2A DIFFERENTIAL PRESSURE		
AI95	P-2B DIFFERENTIAL PRESSURE		
AI96	P-2C DIFFERENTIAL PRESSURE		
AI97	CHWS TEMPERATURE 2		
AI98	CHWR TEMPERATURE 2		
AI99	P-603 CHWS TEMPERATURE		
AI100	P-603 CHWR TEMPERATURE		
AI101	B470 CHWS TEMPERATURE		
AI102	B470 CHWR TEMPERATURE		
AI103	P-603 CHW FLOW		
AI104	B470 CHW FLOW		
AI105	CW BYPASS VALVE 1 (FEEDBACK)		
AI106	CW BYPASS VALVE 2 (FEEDBACK)		
AI107	HPC-1 DIFFERENTIAL PRESSURE		
BI1	CH-1A CHW VALVE END SWITCH	BO1	CH-1A CHW VALVE POSITION
BI2	CH-1A STATUS	BO2	CH-1A ENABLE
BI3	CH-1A LOW LEAVING LIQUID TEMP	BO3	CH-1B CHW VALVE POSITION
BI4	CH-1A COMPRESSOR HIGH DISCHARGE PRESSURE	BO4	CH-1B ENABLE
BI5	CH-1A COMPRESSOR SUCTION PRESSURE	BO5	CH-1C CHW VALVE POSITION
BI6	CH-1B CHW VALVE END SWITCH	BO6	CH-1C ENABLE
BI7	CH-1B STATUS	BO7	P-2A VFD ENABLE
BI8	CH-1B LOW LEAVING LIQUID TEMP	BO8	P-2B VFD ENABLE
BI9	CH-1B COMPRESSOR HIGH DISCHARGE PRESSURE	BO9	P-2C VFD ENABLE
BI10	CH-1B COMPRESSOR SUCTION PRESSURE	BO10	P-3A VFD ENABLE
BI11	CH-1C CHW VALVE END SWITCH	BO11	P-3B VFD ENABLE
BI12	CH-1C STATUS	BO12	HPC-1 ENABLE
BI13	CH-1C LOW LEAVING LIQUID TEMP	BO13	HPC-1 BYPASS VALVE POSITION
BI14	CH-1C COMPRESSOR HIGH DISCHARGE PRESSURE	BO14	P-1A VFD ENABLE
BI15	CH-1C COMPRESSOR SUCTION PRESSURE	BO15	P-1B VFD ENABLE
BI16	P-2A VFD STATUS	BO16	P-1C VFD ENABLE
BI17	P-2B VFD STATUS	BO17	CT-1C BASIN HEATER ON/OFF
BI18	P-2C VFD STATUS	BO18	CT-1C CW SUPPLY ISO VALVE POSITION
BI19	BOILER ALARM	BO19	CT-1C CW RETURN ISO VALVE #1 POSITION
BI20	P-3A VFD STATUS	BO20	CT-1C CW RETURN ISO VALVE #2 POSITION
BI21	P-3B VFD STATUS	BO21	CT-1C FAN VFD ENABLE
BI22	HPC-1 BYPASS VALVE POSITION (FEEDBACK)	BO22	CT-1B BASIN HEATER ON/OFF
BI23	P-1A VFD STATUS	BO23	CT-1B CW SUPPLY ISO VALVE POSITION
BI24	P-1B VFD STATUS	BO24	CT-1B CW RETURN ISO VALVE #1 POSITION
BI25	P-1C VFD STATUS	BO25	CT-1B CW RETURN ISO VALVE #2 POSITION
BI26	P-4A VFD STATUS	BO26	CT-1B FAN VFD ENABLE
BI27	P-4B VFD STATUS	BO27	CT-1A BASIN HEATER ON/OFF
BI28	CT-1C LOW OIL	BO28	CT-1A CW SUPPLY ISO VALVE POSITION
BI29	CT-1C VIBRATION SWITCH	BO29	CT-1A CW RETURN ISO VALVE #1 POSITION
BI30	CT-1C CW SUPPLY ISO VALVE POSITION (FEEDBACK)	BO30	CT-1A CW RETURN ISO VALVE #2 POSITION
BI31	CT-1C CW RETURN ISO VALVE #1 POSITION (FEEDBACK)	BO31	CT-1A FAN VFD ENABLE
BI32	CT-1C CW RETURN ISO VALVE #2 POSITION (FEEDBACK)	BO32	MAKEUP VALVE POSITION
BI33	CT-1C FAN VFD STATUS	BO33	BLOWDOWN VALVE POSITION
BI34	CT-1B LOW OIL	BO34	
BI35	CT-1B VIBRATION SWITCH		
BI36	CT-1B CW SUPPLY ISO VALVE POSITION (FEEDBACK)		
BI37	CT-1B CW RETURN ISO VALVE #1 POSITION (FEEDBACK)		
BI38	CT-1B CW RETURN ISO VALVE #2 POSITION (FEEDBACK)		
BI39	CT-1B FAN VFD STATUS		
BI40	CT-1A LOW OIL		
BI41	CT-1A VIBRATION SWITCH		
BI42	CT-1A CW SUPPLY ISO VALVE POSITION (FEEDBACK)		
BI43	CT-1A CW RETURN ISO VALVE #1 POSITION (FEEDBACK)		
BI44	CT-1A CW RETURN ISO VALVE #2 POSITION (FEEDBACK)		
BI45	CT-1A FAN VFD STATUS		

CHILLER SYSTEM - DDC POINTS SCHEDULE (CON'T)

		OUTPUTS	
BI46	MAKEUP VALVE POSITION (FEEDBACK)		
BI47	BLOWDOWN VALVE POSITION (FEEDBACK)		
BI48	HPC-1 STATUS		
BI49	HPC-1 LOW LEAVING LIQUID TEMP		
BI50	HPC-1 COMPRESSOR HIGH DISCHARGE PRESSURE		
BI51	HPC-1 COMPRESSOR SUCTION PRESSURE		

GENERAL NOTES:

1. REFER TO SHEET M-001 FOR MECHANICAL GENERAL NOTES, LEGEND, AND ABBREVIATIONS.
2. SEE SHEET MI700 FOR CONTROLS LEGEND AND ABBREVIATIONS.

SEQUENCE OF OPERATION - HEATING PLANT

GENERAL DESCRIPTION:
THE HEATING HOT WATER (HHW) SYSTEM CONSISTS OF (1) MODULAR DEDICATED HEAT PUMP CHILLER (HPC) WITH TWO INDEPENDENT MODULES AND SUPPLEMENTAL ELECTRIC BOILER. THERE ARE (2) VFD-DRIVEN, PRIMARY HHW PUMPS PIPED TO A COMMON HEADER, SO THAT ANY HHW PUMP IS CAPABLE OF RUNNING WITH ANY CHILLER AND BOILER COMBINATION. THE HHW SYSTEM IS PIPED IN A VARIABLE PRIMARY FLOW CONFIGURATION, WITH A 2-WAY MODULATING HHW VALVE, HPC BYPASS VALVE, AND 3-WAY MODULATING VALVE FOR SUPPLEMENTAL BOILER HEATING. THE HPC SHALL BE EQUIPPED WITH A 2-POSITION ISOLATION VALVE COMPLETE WITH ACTUATOR AND END SWITCHES ON EACH OF THE MAIN CHILLED AND HEATING HOT WATER PIPES TO THE HPC. ONE HHW DIFFERENTIAL PRESSURE TRANSMITTER SHALL BE LOCATED IN THE PLANT. THE HPC CHILLER HAS TWO DEDICATED CHILLED WATER (CHW) PUMPS PIPED TO A COMMON HEADER, SO THAT ANY DEDICATED CHW PUMP IS CAPABLE OF RUNNING WITH THE HPC.

HEATING PLANT ENABLE/DISABLE:
THE HEATING PLANT SHALL BE ENABLED AND DISABLED MANUALLY BY OPERATOR COMMAND.

WHEN THE HEATING PLANT IS DISABLED, ALL HHW PUMPS AND HHW BOILER SHALL BE COMMANDED OFF. ALL ISOLATION VALVES SHALL CLOSE. THE HHW BYPASS VALVE SHALL FULLY OPEN.

NORMAL OPERATION:
THE FOLLOWING SEQUENCE APPLIES TO THE OPERATION OF THE HEATING HOT WATER SYSTEM DURING HEAT RECOVERY (HR) MODE:
- FIRST, COMMAND HHW BYPASS CLOSED, HPC BYPASS CLOSED, HPC HEATING HOT WATER VALVES OPEN, AND BOILER 3-WAY VALVE TO BYPASS THE BOILER.
- SECOND, ONCE VALVE POSITIONS HAVE BEEN PROVEN BY END SWITCHES, COMMAND HHW PUMP WITH LEAST RUN HOURS TO START
- PROVE HHW PUMP RUNNING STATUS USING A CURRENT-SENSING RELAY. AFTER A 60 SECOND (ADJ.) STABILIZATION DELAY, COMMAND CHILLED WATER ISOLATION VALVES FOR THE HPC OPEN.
- ENABLE DEDICATED CHW PUMP WITH THE LEAST RUN HOURS TO START AND PROVE RUNNING STATUS USING A CURRENT-SENSING RELAY. AFTER A 60 SECOND (ADJ.) STABILIZATION DELAY, ENABLE THE HPC.

THE HPC CONTROL PANEL SHALL OPERATE AND STAGE THE MODULES TO MAINTAIN THE HHW SUPPLY TEMPERATURE AT ITS SETPOINT (100°F). HHW PUMP SPEED SHALL VARY TO MAINTAIN THE DIFFERENTIAL PRESSURE SETPOINT DETERMINED BY THE TESTING AND BALANCING CONTRACTOR. HPC CONTROL PANEL SHALL OPEN AND CLOSE INTEGRAL ISOLATION VALVES BETWEEN THE MODULES BASED ON MODULE OPERATION. HPC CONTROL PANEL SHALL MODULATE DEDICATED CHW PUMP SPEED TO MAINTAIN HPC REFRIGERANT HEAD PRESSURE.

SUPPLEMENTAL / EMERGENCY OPERATION:
THE FOLLOWING SEQUENCE APPLIES ONLY WHEN THE NORMAL OPERATION IS NOT ABLE TO MAINTAIN HHW SUPPLY TEMPERATURE SETPOINT. TWO CASES ARE CONSIDERED BELOW, THE FIRST IS FOR SUPPLEMENT HEATING AND THE SECOND IS FOR EMERGENCY OPERATION (HPC ARE DISABLED, HEAT IS NEEDED).

SUPPLEMENTAL HEATING IS PROVIDED BY AN ELECTRIC BOILER:
- FIRST, CONFIRM HPC AND ASSOCIATED VALVES ARE OPERATIONAL
- SECOND, MODULATE BOILER 3-WAY VALVE TO PROVIDE BOILER WITH MINIMUM REQUIRED FLOW.
- PROVE THAT BOILER 3-WAY POTION, AND STAGE BOILER TO MINIMUM HEATING SETPOINT.
- VARY ELECTRIC BOILER CAPACITY TO SATISFY HHW SUPPLY TEMPERATURE SETPOINT (CONFIRM BOILER HAS SUFFICIENT WATER FLOW AS ELECTRIC INPUT IS INCREASED)
- DISABLE ELECTRIC BOILER WHEN HHW SUPPLY TEMPERATURE SETPOINT IS REACHED
- AFTER ELECTRIC BOILER HAS BEEN OFF FOR 20 MINUTES (ADJ.) BOILER 3-WAY VALVE SHALL MODULATE TO BYPASS BOILER

AFTER ELECTRIC BOILER HAS BEEN OFF FOR 20 MINUTES (ADJ.) BOILER 3-WAY VALVE SHALL MODULATE TO BYPASS BOILER

EMERGENCY OPERATION (HPC DISABLED):
- FIRST, COMMAND HHW BYPASS CLOSED, HPC VALVES CLOSED, HPC BYPASS OPEN, AND 3-WAY BOILER BYPASS TO ALLOW FLOW INTO BOILER.
- SECOND, ONCE VALVE POSITIONS HAVE BEEN PROVEN FULLY OPEN BY END SWITCHES, COMMAND HHW PUMP WITH LEAST RUN HOURS TO START
- PROVE HHW AND CW PUMP RUNNING STATUS USING A CURRENT-SENSING RELAY. AFTER A 60 SECOND (ADJ.) STABILIZATION DELAY, STAGE ELECTRIC BOILER ON TO MINIMUM HEATING SETPOINT.
- VARY ELECTRIC BOILER CAPACITY TO SATISFY HHW SUPPLY TEMPERATURE SETPOINT (CONFIRM BOILER HAS SUFFICIENT WATER FLOW AS ELECTRIC INPUT IS INCREASED)
- DISABLE ELECTRIC BOILER WHEN HHW SUPPLY TEMPERATURE SETPOINT IS REACHED

AFTER ELECTRIC BOILER HAS BEEN OFF FOR 20 MINUTES (ADJ.) BOILER 3-WAY VALVE SHALL MODULATE TO BYPASS BOILER

SYSTEM MONITORING AND ALARMS:
IF ANY PIECE OF EQUIPMENT FAILS TO PROVE STATUS AFTER IT IS COMMANDED, WITH A 20 SEC. (ADJ.) TIME DELAY, AN ALARM SHALL BE TRIGGERED. THIS INCLUDES THE FOLLOWING:
- HHW PUMPS
- HPC
- PUMPS
- ISOLATION VALVES
- BOILER

IF THE HHW SUPPLY TEMPERATURE FALLS 3°F (ADJ.) ABOVE OR SETPOINT FOR 10 MINUTES (ADJ.), AN ALARM SHALL BE SENT TO THE DDC.
IF THE HHR RETURN TEMPERATURE RISES 3°F (ADJ.) ABOVE OR SETPOINT FOR 10 MINUTES (ADJ.), AN ALARM SHALL BE SENT TO THE DDC.

THE DDC SYSTEM SHALL CALCULATE THE BUILDINGS' HEATING HOT WATER LOAD USING SUPPLY-WATER AND RETURN-WATER TEMPERATURES, AND FLOW INSTRUMENTATION IN THE HHW LOOP.

REPORTING:
CUSTOMIZED REPORTS SHALL BE GENERATED TO PRINT ALARMS, TRENDS, MESSAGES, AND TO LOG KEY CHILLER PLANT PERFORMANCE INDICES AT A MINIMUM, THE PARAMETERS TO BE MONITORED INCLUDE:
- TOTAL HHW LOOP FLOW
- HHW SUPPLY TEMPERATURE VERSUS HHW SUPPLY SETPOINT
- HPC RUN-HOURS
- INDIVIDUAL HHW PUMP RUN-HOURS
- INDIVIDUAL DEDICATED CHW PUMP RUN-HOURS
- INDIVIDUAL BOILER RUN-HOURS

SYM	DESCRIPTION	DATE	APPR
2	AMENDMENT CHANGES	04/05/16	CMG

NAVFAC

COMMONWEALTH OF VIRGINIA
CHRISTIAN M. GUERRA
Lic. No.047284
04/04/2016
PROFESSIONAL ENGINEER
SEAL

BURNS McDONNELL
1305 EXECUTIVE BLVD.
SUITE 160
CHESAPEAKE, VA 23320
757-548-2056
A/E INFO

APPROVED
FOR COMMANDER NAVFAC / B.L.T.L.
ACTIVITY
SATISFACTORY TO DATE
DES CMG | DRW CMG | CHK JPC
PROJECT MANAGER
IPT TECH. BRANCH HEAD
CHIEF ENG/ARCH

DEPARTMENT OF THE NAVY
NAVAL FACILITIES ENGINEERING COMMAND
IPT-HAMPTON ROADS
NAVAL FACILITIES ENGINEERING COMMAND ~ MIDLANT
NAVAL STATION NORFOLK
NAS OCEANA-DAM NECK ANNEX
VIRGINIA BEACH, VIRGINIA
P-603 MARITIME SURVEILLANCE SYSTEM FACILTY
HVAC CONTROL DIAGRAMS AND SOO - CHW, CW, HHW PLANT

SCALE: AS NOTED
EPROJECT NO. 1344924
CONSTR. CONTR. NO. N40085-16-R-6119
NAVFAC DRAWING NO. 12712983
SHEET 217 OF 296
MI709

DRAWFORM REVISION: 10 MAY 2014

FILE NAME: C:\Revit_Projects\82327-P603MSSFac\Models\MEP\82327_M_603_cguerra.rvt
REVDATE: 4/6/2016 11:06:14 AM