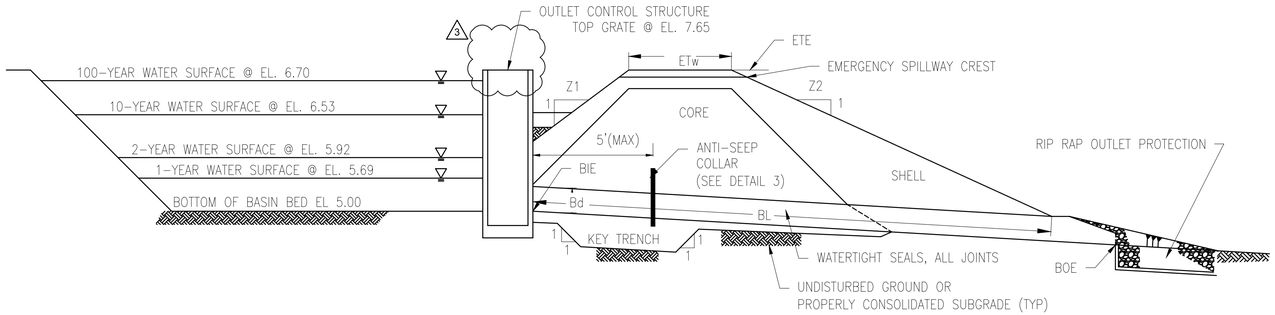

BASIN NO.	WATER SURFACE ELEVATION 1 YEAR	2 YEAR	10 YEAR	BOTTOM BASIN ELEVATION	Z1 (FT)	Z2 (FT)	BARREL DIA Bd (IN)	INLET ELEV BIE (FT)	MAT'L	LENGTH BL (FT)	OUTLET ELEV BOE (FT)	EMBANKMENT TOP ELEV ETE (FT)	TOP WIDTH ETw (FT)	CREST (FT)
ED-1	5.69	5.92	6.53	5.0	3	3	12	5.0	CLASS III RCP	30	3.9	7.65	8	6.55

DETENTION BASIN SECTION (1)

NOT TO SCALE — C-401, C-402

NOTES:
1. IMPERVIOUS CORE SHALL BE OF A MATERIAL WITH CLASSIFICATIONS: GC, SC OR CL.
2. PERVIOUS SHELL SHALL BE OF A MATERIAL WITH CLASSIFICATION: ROCKFILL, GW, GP, SW, SP.

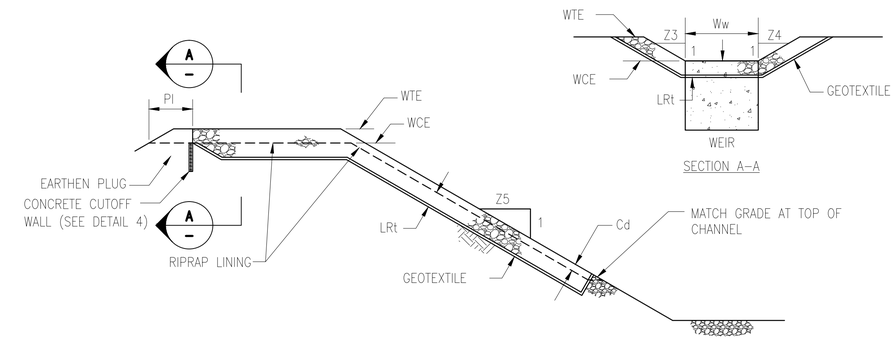

BASIN NO.	WEIR Z3 (FT)	Z4 (FT)	TOP ELEV WTE (FT)	CREST ELEV WCE (FT)	WIDTH Ww (FT)	PI (FT)	LINING RIPRAP SIZE (d_{50})	RIPRAP THICK. LRt (IN)	CHANNEL Z5 (FT)	DEPTH Cd (FT)
ED-1	3	3	7.65	6.55	11	1	12	36	3	0.50

EMERGENCY SPILLWAY SECTION (2)

NOT TO SCALE — C-401, C-402

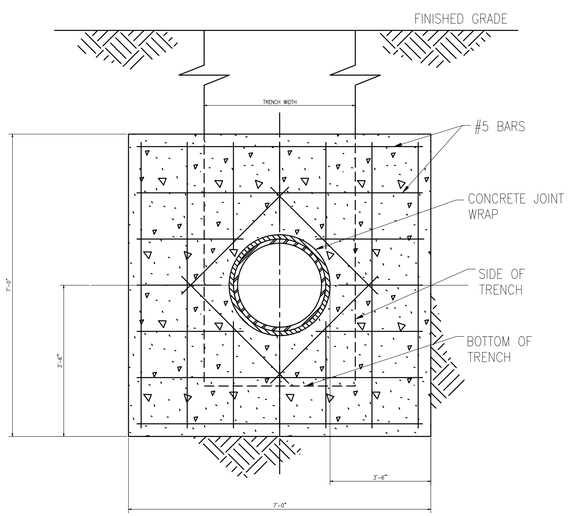

SECTION A-A

NOTES:
1. WRAP PIPE WITH CONCRETE JOINT WRAP WHERE PIPE IS EXPOSED TO CONCRETE PRIOR TO POURING.
2. EXCAVATION & BACKFILL SHALL BE AS SPECIFIED.
3. DO NOT PLACE WITHIN 2 FEET OF A PIPE JOINT.
4. REFER TO **DETAIL 1** FOR LOCATION.

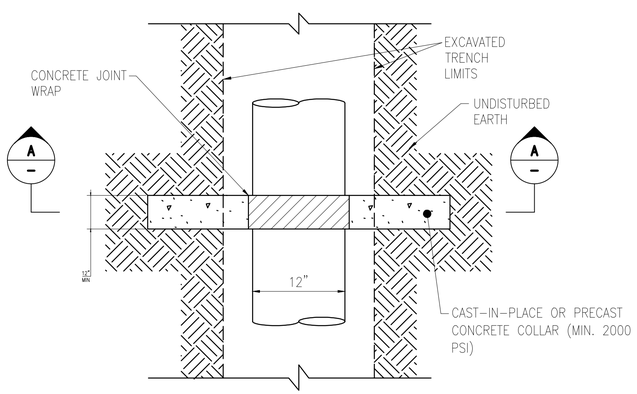

PLAN

ANTI SEEP COLLAR (3)

NOT TO SCALE — C-401, C-402

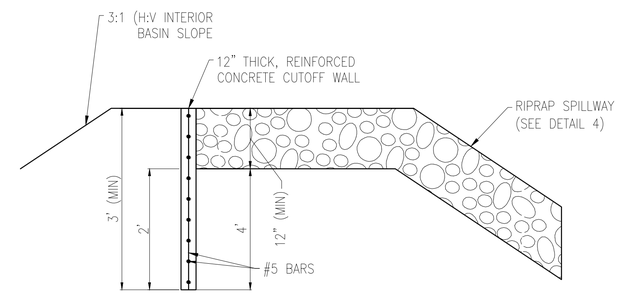

SECTION B-B

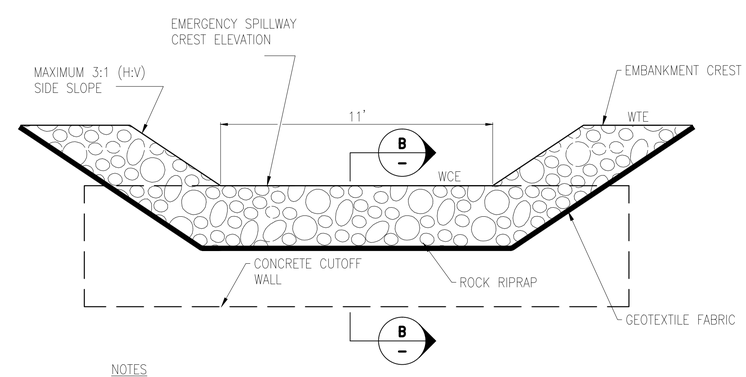

NOTES
1. SEE SECTION THROUGH SPILLWAY FOR FURTHER INFORMATION.

SPILLWAY APRON (4)

NOT TO SCALE — C-401, C-402

SYM	DESCRIPTION	DATE	APPR
3	AMENDMENT CHANGES	04/13/2016	KNW

NAVFAC

COMMONWEALTH OF VIRGINIA
KEVIN NATHANIEL WARRENDER
Lic. No. 402034205
4-13-16
PROFESSIONAL ENGINEER

BURNS McDONNELL
1305 EXECUTIVE BLVD.
SUITE 160
CHESAPEAKE, VA 23320
757-548-2056

A/E INFO

APPROVED
FOR COMMANDER NAVFAC
ACTIVITY
SATISFACTORY TO DATE
DES KW DRW FP CHK LRM
PM
BRANCH MANAGER
CHIEF ENG/ARCH

DEPARTMENT OF THE NAVY
NAVAL FACILITIES ENGINEERING COMMAND
IPT-HAMPTON ROADS
NAVAL FACILITIES ENGINEERING COMMAND ~ MIDLANT
NAVAL STATION NORFOLK
NAS OCEANA-DAM NECK ANNEX
VIRGINIA BEACH, VIRGINIA
P-603 MARITIME SURVEILLANCE SYSTEM FACILITY
DETAILS

SCALE: AS NOTED
EPROJECT NO.: 1344924
CONSTR. CONTR. NO. N40085-16-R-6119
NAVFAC DRAWING NO. 12712791
SHEET 25 OF 296
C-506

DRAWFORM REVISION: 10 MAY 2014

FILE NAME: Z:\Clients\JNF\USNavy\MidAt\82327_P603MSSFac\Design\Civil\Sheets\C506.dwg LAYOUT NAME: C-506 PLOTTED: Tuesday, April 12, 2016 - 3:27pm USER: kwarrender