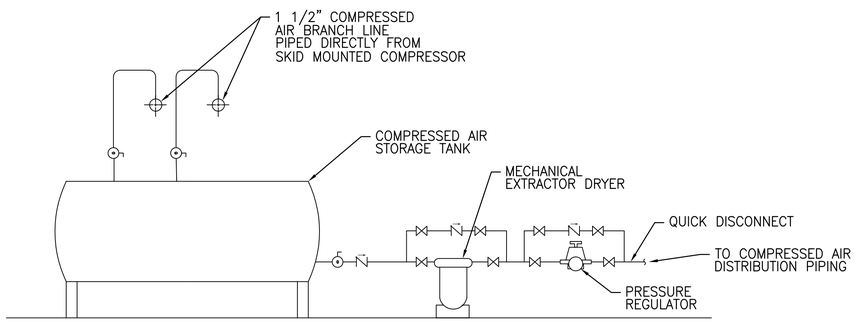

1 COMPRESSED AIR SYSTEM CONNECTION DETAIL

N.T.S. M–401

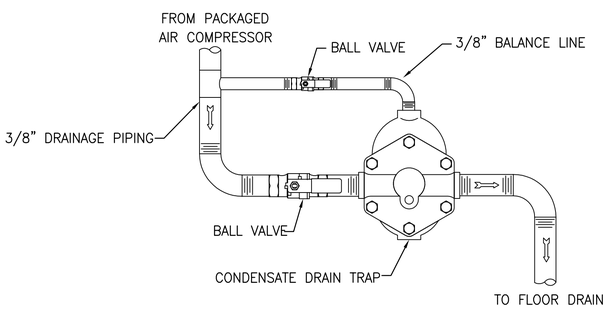

2 CONDENSATE AUTOMATIC DRAIN TRAP DETAIL

N.T.S. M–401

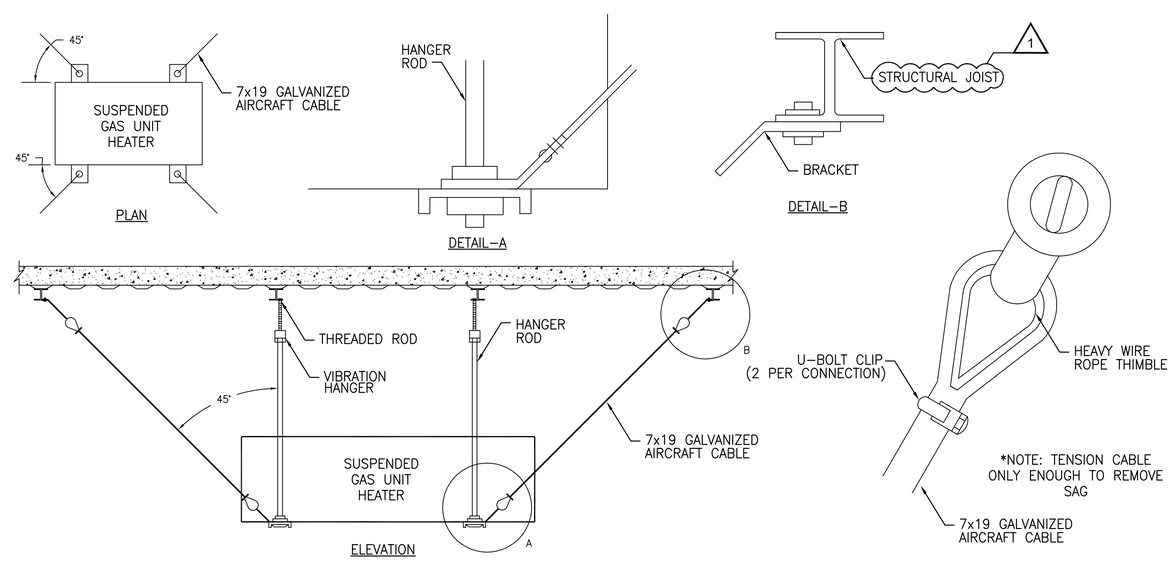

3 GAS UNIT HEATER MOUNTING DETAIL

N.T.S. M–401

STM	DESCRIPTION	DATE	APPR
1	REVISE DETAIL 3 BEAM TO JOIST	5/12/2016	
	FINAL SUBMISSION	5/2/2016	

NAVFAC

COMMONWEALTH OF VIRGINIA
REGISTERED PROFESSIONAL
ROBERT H. GOULD
ENGINEER
PE074254
5/12/16

the PROTECTION ENGINEERING GROUP
14585 Avion Parkway, Suite 150 703-488-6990
Chantilly, Virginia 20151 fax: 703-488-6994
www.PEGroupInc.com

A/E INFO

APPROVED

FOR COMMANDER NAVFAC

ACTIVITY

SATISFACTORY TO

DES NM DRW KM CHK RG

PM/DM KPL/IAS

BRANCH MANAGER

CHIEF ENG/ARCH Mark J. Airaghi, PE

FIRE PROTECTION

DEPARTMENT OF THE NAVY
NAVAL FACILITIES ENGINEERING COMMAND – MID-ATLANTIC
HAMPTON ROADS IPT
NAVAL FACILITIES ENGINEERING COMMAND
NAS OCEANA – VIRGINIA BEACH, VIRGINIA
NAVAL AIR STATION OCEANA
VIRGINIA BEACH, VIRGINIA

HANGAR 111 FIRE PROTECTION AND STRUCTURAL REPAIRS

DETAILS - MECHANICAL

SCALE: NO SCALE

EPROJECT NO.: 1372146

CONSTR. CONTR. NO.

NAVFAC DRAWING NO. 12716372

SHEET 150 OF 170

M-503

DRAWFORM REVISION: 10 MAY 2014

FILE NAME: P:\Projects\GHDG\GHDG1501-NAVFAC Hangar 111\DESIGN\M\1372146_M-503.dwg LAYOUT NAME: M503 PLOTTED: Thursday, May 12, 2016 – 2:21pm USER: mmarcello