NOTES

GENERAL

1. LOCATE ALL UTILITIES BEFORE WORK BEGINS. UTILITY LOCATIONS SHOWN ARE APPROXIMATE. ALL UTILITIES MAY NOT BE SHOWN.

2. FOR SITE SECURITY AND JOB SAFETY. PROVIDE CONSTRUCTION ACTIVITIES IN ACCORDANCE WITH OSHA STANDARDS AND LOCAL REQUIREMENTS.

3. CONSTRUCT ACCESSIBLE ROUTES, PARKING SPACES, RAMPS, SIDEWALKS AND WALKWAYS IN CONFORMANCE WITH THE FEDERAL AMERICANS WITH DISABILITIES ACT AND WITH STATE AND LOCAL LAWS AND REGULATIONS (WHICHEVER ARE MORE STRINGENT).

4. UPON AWARD OF CONTRACT, CONTRACTOR MUST MAKE NECESSARY CONSTRUCTION NOTIFICATIONS AND APPLY FOR AND OBTAIN NECESSARY PERMITS, PAY FEES, AND POST BONDS ASSOCIATED WITH THE WORK INDICATED ON THE CONTRACT DOCUMENTS. DO NOT CLOSE OR OBSTRUCT ROADWAYS, SIDEWALKS, AND FIRE HYDRANTS, WITHOUT APPROPRIATE PERMITS.

5. TRAFFIC SIGNAGE AND PAVEMENT MARKINGS MUST CONFORM TO THE MANUAL OF UNIFORM TRAFFIC CONTROL DEVICES.

6. RESTORE AREAS OUTSIDE THE LIMITS OF PROPOSED WORK DISTURBED BY THE CONTRACTOR'S OPERATIONS TO THEIR ORIGINAL CONDITION AT THE CONTRACTOR'S EXPENSE.

7. PRIOR SOIL TESTING HAS BEEN PERFORMED AND IS AVAILABLE FOR THE CONTRACTOR TO REVIEW. HOWEVER, IN THE EVENT THAT SUSPECTED CONTAMINATED SOIL, GROUNDWATER, AND OTHER MEDIA ARE ENCOUNTERED DURING EXCAVATION AND CONSTRUCTION ACTIVITIES BASED ON VISUAL, OLFACTORY, OR OTHER EVIDENCE, THE CONTRACTOR MUST STOP WORK IN THE VICINITY OF THE SUSPECT MATERIAL TO AVOID FURTHER SPREADING OF THE MATERIAL, AND MUST NOTIFY THE CONTRACTING OFFICER IMMEDIATELY SO THAT THE APPROPRIATE TESTING PER THE PROJECT SPECIFICATIONS AND SUBSEQUENT ACTION CAN BE TAKEN.

8. USE SOIL AS BACKFILL AS LONG AS IT IS NOT CONTAMINATED (STAINING ODORS, FREE PRODUCT, ETC.) REVIEW THE SOIL TESTING REPORT NAMED "SOIL SAMPLING AND ANALYSIS HANGAR 111 FIRE PROTECTION & STRUCTURAL REPAIRS" DATED 10/16/15. IF SOIL IS NOT USED AS FILL THEN STORE SOIL ON AND UNDER PLASTIC OR IN A ROLLOFF CONTAINER WITH A COVER ON IT. NAVFAC EV SERVICES MUST REVIEW DISPOSAL FACILITY AND AND SIGN ALL MANIFEST PRIOR TO OFFSITE TRANSPORT AND DISPOSAL. COORDINATE WITH NAVFAC EV SERVICES FOR THEM TO LABELING AND SETUP AN ACCUMULATION AREA WITH THE NASO EV DEPARTMENT.

9. CONTRACTOR TO PREVENT DUST, SEDIMENT, AND DEBRIS FROM EXITING THE SITE AND WILL BE RESPONSIBLE FOR CLEANUP, REPAIRS AND CORRECTIVE ACTION IF SUCH OCCURS.

10. REPAIR DAMAGE RESULTING FROM CONSTRUCTION LOADS BY THE CONTRACTOR AT NO ADDITIONAL COST TO GOVERNMENT.

11. CONTRACTOR MUST CONTROL STORMWATER RUNOFF DURING CONSTRUCTION TO PREVENT ADVERSE IMPACTS TO OFF SITE AREAS, AND IS RESPONSIBLE TO REPAIR RESULTING DAMAGES, IF ANY, AT NO COST TO GOVERNMENT.

UTILITIES

1. THE LOCATIONS, SIZES, AND TYPES OF EXISTING UTILITIES ARE SHOWN AS AN APPROXIMATE REPRESENTATION ONLY. THE UTILITY INFORMATION SHOWN DOES NOT GUARANTEE THE ACTUAL EXISTENCE, SERVICEABILITY, OR OTHER DATA CONCERNING THE UTILITIES, NOR DOES IT GUARANTEE AGAINST THE POSSIBILITY THAT ADDITIONAL UTILITIES MAY BE PRESENT THAT ARE NOT SHOWN ON THE PLANS. PRIOR TO ORDERING MATERIALS AND BEGINNING CONSTRUCTION, THE CONTRACTOR MUST VERIFY AND DETERMINE THE EXACT LOCATIONS, SIZES, AND ELEVATIONS OF THE POINTS OF CONNECTIONS TO EXISTING UTILITIES AND, MUST CONFIRM THAT THERE ARE NO INTERFERENCES WITH EXISTING UTILITIES AND THE PROPOSED UTILITY ROUTES, INCLUDING ROUTES WITHIN THE PUBLIC RIGHTS OF WAY.

2. WHERE AN EXISTING UTILITY IS FOUND TO CONFLICT WITH THE PROPOSED WORK, OR EXISTING CONDITIONS DIFFER FROM THOSE SHOWN SUCH THAT THE WORK CANNOT BE COMPLETED AS INTENDED, ACCURATELY DETERMINE WITHOUT DELAY THE LOCATION, ELEVATION, AND SIZE OF THE UTILITY, AND SUBMIT THE INFORMATION FURNISHED IN WRITING TO THE CONTRACTING OFFICER FOR THE RESOLUTION OF THE CONFLICT AND CONTRACTOR'S FAILURE TO NOTIFY PRIOR TO PERFORMING ADDITIONAL WORK RELEASES GOVERNMENT FROM OBLIGATIONS FOR ADDITIONAL PAYMENTS WHICH OTHERWISE MAY BE WARRANTED TO RESOLVE THE CONFLICT.

3. SET CATCH BASIN RIMS, AND INVERTS OF SEWERS, DRAINS, AND DITCHES IN ACCORDANCE WITH ELEVATIONS ON THE GRADING AND UTILITY PLANS.

4. RIM ELEVATIONS FOR DRAIN AND SEWER MANHOLES, WATER VALVE COVERS, GAS GATES, ELECTRIC AND TELEPHONE PULL BOXES, AND MANHOLES, AND OTHER SUCH ITEMS, ARE APPROXIMATE. SET/RESET AS FOLLOWS:

   A. PAVEMENTS AND CONCRETE SURFACES: FLUSH

   B. ALL SURFACES ALONG ACCESSIBLE ROUTES: FLUSH

   C. LANDSCAPE, TOPSOIL AND SEED, AND OTHER EARTH SURFACE AREAS: ONE INCH ABOVE SURROUNDING AREA AND TAPER EARTH TO THE RIM ELEVATION.

5. PROVIDE THE LOCATION, SIZE, DEPTH, AND SPECIFICATIONS FOR CONSTRUCTION OF PROPOSED PRIVATE UTILITY SERVICES ACCORDING TO THE REQUIREMENTS PROVIDED BY, AND APPROVED BY, THE RESPECTIVE UTILITY COMPANY (GAS, TELEPHONE, ELECTRIC, FIRE ALARM, ETC.). FINAL DESIGN LOADS AND LOCATIONS TO BE COORDINATED WITH THE CONTRACTING OFFICER.

6. NOT USED.

7. ALL DRAINAGE AND SANITARY STRUCTURE INTERIOR DIAMETERS (4' MIN.) TO BE DETERMINED BY THE MANUFACTURER BASED ON THE PIPE CONFIGURATIONS SHOWN ON THESE PLANS AND LOCAL MUNICIPAL STANDARDS. FOR MANHOLES THAT ARE 20 FEET IN DEPTH AND GREATER, PROVIDE THE MINIMUM DIAMETER OF 5 FEET. 2

LAYOUT AND MATERIALS

1. DIMENSIONS ARE FROM THE FACE OF CURB, FACE OF BUILDING, FACE OF WALL, AND CENTER LINE OF PAVEMENT MARKINGS, UNLESS OTHERWISE NOTED.

2. CAST CURBING IN PLACE WITHIN THE SITE UNLESS OTHERWISE INDICATED ON THE PLANS.

3. SET OR RESET BY A PROFESSIONAL LICENSED SURVEYOR ANY PROPERTY LINE MONUMENTATION DISTURBED DURING CONSTRUCTION.

4. PRIOR TO START OF CONSTRUCTION, VERIFY EXISTING PAVEMENT ELEVATIONS AT INTERFACE WITH PROPOSED PAVEMENTS, AND EXISTING GROUND ELEVATIONS ADJACENT TO DRAINAGE OUTLETS TO ASSURE PROPER TRANSITIONS BETWEEN EXISTING AND PROPOSED FACILITIES.

5. SYMBOLS AND LEGENDS OF PROJECT FEATURES ARE GRAPHIC REPRESENTATIONS AND ARE NOT NECESSARILY SCALED TO THEIR ACTUAL DIMENSIONS OR LOCATIONS ON THE DRAWINGS. REFER TO THE DETAIL SHEET DIMENSIONS, MANUFACTURERS' LITERATURE, SHOP DRAWINGS AND FIELD MEASUREMENTS OF SUPPLIED PRODUCTS FOR LAYOUT OF THE PROJECT FEATURES.

6. DO NOT RELY SOLELY ON ELECTRONIC VERSIONS OF THE CONTRACT DOCUMENTS. VERIFY LOCATION OF PROJECT FEATURES IN ACCORDANCE WITH THE PAPER COPIES OF THE CONTRACT DOCUMENTS.

DEMOLITION

1. REMOVE AND DISPOSE OF EXISTING MANMADE SURFACE FEATURES WITHIN THE LIMIT OF WORK INCLUDING BUILDINGS, STRUCTURES, PAVEMENTS, SLABS, CURBING, FENCES, UTILITY POLES, SIGNS, ETC. UNLESS INDICATED OTHERWISE ON THE DRAWINGS.

2. TERMINATE EXISTING UTILITIES, UNLESS OTHERWISE NOTED, IN CONFORMANCE WITH LOCAL, STATE AND INDIVIDUAL UTILITY COMPANY STANDARDS SPECIFICATIONS, AND DETAILS. THE CONTRACTOR MUST COORDINATE UTILITY SERVICE DISCONNECTS WITH THE UTILITY REPRESENTATIVES.

3. DISPOSE OF DEMOLITION DEBRIS IN ACCORDANCE WITH APPLICABLE FEDERAL, STATE AND LOCAL REGULATIONS, ORDINANCES AND STATUTES.

4. THIS DEMOLITION PLAN IS INTENDED TO AID DURING THE BIDDING AND CONSTRUCTION PROCESS AND IS NOT INTENDED TO DEPICT EACH AND EVERY ELEMENT OF DEMOLITION. THE CONTRACTOR IS RESPONSIBLE FOR IDENTIFYING THE DETAILED SCOPE OF DEMOLITION.

EROSION CONTROL

1. PRIOR TO STARTING ANY OTHER WORK ON THE SITE, NOTIFY APPROPRIATE AGENCIES AND PROVIDE EROSION CONTROL MEASURES AS SHOWN ON THE PLANS AND AS IDENTIFIED IN FEDERAL, STATE AND LOCAL APPROVAL DOCUMENTS PERTAINING TO THIS PROJECT.

2. INSPECT AND MAINTAIN EROSION CONTROL MEASURES, AND REMOVE SEDIMENT THEREFROM ON A WEEKLY BASIS AND WITHIN TWELVE HOURS AFTER EACH STORM EVENT AND DISPOSE OF SEDIMENTS IN AN UPLAND AREA SUCH THAT THEY DO NOT ENCUMBER OTHER DRAINAGE STRUCTURES AND PROTECTED AREAS.

3. CONTROL CONSTRUCTION SUCH THAT SEDIMENTATION MUST NOT AFFECT REGULATORY PROTECTED AREAS, WHETHER SUCH SEDIMENTATION IS CAUSED BY WATER, WIND OR DIRECT DEPOSIT.

4. PERFORM CONSTRUCTION SEQUENCING SUCH THAT EARTH MATERIALS ARE EXPOSED FOR A MINIMUM OF TIME BEFORE THEY ARE COVERED, SEEDED OR OTHERWISE STABILIZED TO PREVENT EROSION.

5. UPON COMPLETION OF CONSTRUCTION AND ESTABLISHMENT OF PERMANENT GROUND COVER, REMOVE AND DISPOSE OF EROSION CONTROL MEASURES AND CLEAN SEDIMENT AND DEBRIS FROM ENTIRE DRAINAGE AND SEWER SYSTEMS.

EXISTING CONDITIONS INFORMATION

1. HANGAR 111 IS LOCATED ON THE NAVAL AIR STATION OCEANA, IN VIRGINIA BEACH, VIRGINIA. TO THE NORTHEAST OF THE HANGAR IS A PARKING APRON AND RUNWAY 32/14, TO THE SOUTHEAST IS AN EXISTING HANGAR, TO THE SOUTHWEST IS 1ST STREET AND TO THE NORTHWEST IS A PARKING APRON AND RUNWAY 23/05. THE EXISTING ELEVATIONS RANGE FROM 16 FEET TO 22 FEET ABOVE MEAN SEA LEVEL. THE SITE CONSIST OF PRIMARILY BITUMINOUS PAVEMENT AND CONCRETE WITH MINIMAL PERVIOUS AREAS. HANGAR 111 IS SERVICED BY TWO WATER LINES, A 12-INCH HIGH PRESSURE AND A 10-INCH LOW PRESSURE LINE. THE 12-INCH HIGH PRESSURE LINE SERVICES THE FOAM ROOM AND SPRINKLERS. THE 10-INCH LOW PRESSURE LINE LOOPS THE HANGAR AND SERVICES THE FIRE HYDRANTS AROUND THE HANGAR.

INCIDENTAL CONCRETE

1. PROVIDE CLASS "A-4" AIR ENTRAINED CONCRETE (4,000 PSI) IN ACCORDANCE WITH SECTION 217 OF THE 2007 VIRGINIA DEPARTMENT OF TRANSPORTATION ROAD AND BRIDGE SPECIFICATIONS, UNLESS OTHERWISE SPECIFIED.

2. CONSTRUCT CURB AND GUTTER IN SECTIONS OF UNIFORM LENGTHS, APPROXIMATELY TEN (10') FEET (SECTIONS LESS THAN SIX FEET ARE PROHIBITED). FORM EXPANSION JOINTS AT INTERVALS OF ONE HUNDRED FEET (100') USING 1/2" PREMOLDED BITUMINOUS FIBER JOINT FILLER. EXPANSION JOINTS ARE REQUIRED AS FOLLOWS:

   CURB & GUTTER -------- 100'
   SIDEWALK 5' WIDTH --- 50'

STM	DESCRIPTION	DATE	APPR
2	REVISED PIPE DEPTH	6/1/2016	
1	FINAL SUBMISSION	5/2/2016	

NAVFAC

COMMONWEALTH OF VIRGINIA
BRIAN SCOTT CHEWNING
Lic. No. 038283
6/1/16
PROFESSIONAL ENGINEER
SEAL

the PROTECTION ENGINEERING GROUP
14585 Avion Parkway, Suite 150 703-488-9955
Chantilly, Virginia 20151 fax: 703-488-9994
www.PEGroup-Inc.com

PENNONI ASSOCIATES INC.
349 Southport Circle, Suite 100
Virginia Beach, Virginia 23452
T 757.497.7472 F 757.497.0250
A/E INFO

APPROVED

FOR COMMANDER NAVFAC

ACTIVITY

SATISFACTORY TO

DE'S AT DRW RSP CHK BSC

PM/DM KPL/IAS

BRANCH MANAGER

CHIEF ENG/ARCH Mark J. Airaghi, PE

FIRE PROTECTION

DEPARTMENT OF THE NAVY
NAVAL FACILITIES ENGINEERING COMMAND
HAMPTON ROADS IPT

NAVAL FACILITIES ENGINEERING COMMAND ~ MID-ATLANTIC
NAS OCEANA -- VIRGINIA BEACH, VIRGINIA

NAVAL AIR STATION OCEANA
VIRGINIA BEACH, VIRGINIA

HANGAR 111 FIRE PROTECTION AND STRUCTURAL REPAIRS

REFERENCE SHEET - GENERAL NOTES - CIVIL

SCALE: NO SCALE

EPROJECT NO.: 1372146

CONSTR. CONTR. NO.

NAVFAC DRAWING NO. 12716236

SHEET 14 OF 170

C-001

DRAWFORM REVISION: 10 MAY 2014

FILE NAME: N:\PROJECTS\GHDO\1501-Hangar 111\DESIGN_PUBLISH\1372146_C-001.dwg LAYOUT NAME: C-001 PLOTTED: Tuesday, May 31, 2016 - 12:37pm USER: RPortill

SYMBOL LIST

EXISTING		NEW
	BUILDING OUTLINE	
	EDGE OF CONCRETE	
WALK	CONCRETE SIDEWALK	
	CHAIN LINK FENCE	
	CURB WITH GUTTER PAN	
	CURB	
	EDGE OF PAVEMENT	
	PARKING SPACE MARKING	
	BOLLARD	
AC	AIR CONDITIONING UNIT	
TBM	TEMPORARY BENCHMARK	
UG	UNDERGROUND GAS LINE	
	GAS METER	
UC	UNDERGROUND COMMUNICATION LINE	
T	TELEPHONE PEDESTAL	
OE	OVERHEAD ELECTRIC LINE	
UE	UNDERGROUND ELECTRIC LINE	
	STREET LIGHT POLE	
	2 ARM STREET LIGHT POLE	
	UTILITY POLE	
E	ELECTRIC MANHOLE	
	TRANSFORMER	
	ELECTRIC JUNCTION BOX	
UNID	UNIDENTIFIED UNDERGROUND UTILITY	
GR	GROUNDING SYSTEM	
12" W	WATER LINE	W
	UNIDENTIFIED VALVE	
	WATER METER	
	WATER VALVE	
	THRUST BLOCK	
	CAP	
	FIRE HYDRANT	
	FIRE DEPARTMENT CONNECTION	FDC
	POST INDICATOR VALVE	
	MONITORING WELL	
	SANITARY SEWER CLEANOUT	
	MANUAL OIL INTERCEPTOR (2)	
S	SANITARY SEWER MANHOLE	S
S	UNDERGROUND SANITARY SEWER LINE	SS
	TRENCH	
D	STORM DRAIN MANHOLE	D
	DRYWELL	W
4" SD	UNDERGROUND STORM DRAIN LINE	D
	SIGN	

B1 / CS101 — DETAIL NUMBER / DETAIL INDICATOR / SHEET WHERE DETAIL IS DRAWN

1 KEYNOTE

ABBREVIATIONS

AFFF	AQUEOUS FILM FORMING FOAM
ABBR	ABBREVIATIONS
APPROX	APPROXIMATELY
BC	BUILDING CONNECTION
BLDG	BUILDING
BOS	BOTTOM OF STRUCTURE
C/L	CENTERLINE
CLF	CHAIN LINK FENCE
CO	CLEANOUT
COMM	COMMUNICATION
CONC	CONCRETE
DI	DROP INLET/ DUCTILE IRON
DIP	DUCTILE IRON PIPE
DIA	DIAMETER
DMH	DRAINAGE MANHOLE
DWG	DRAWING (2)
ELEC	ELECTRICAL
ELEV	ELEVATION
EQUIP	EQUIPMENT
EXIST	EXISTING
FDC	FIRE DEPARTMENT CONNECTION
FFE	FINISHED FLOOR ELEVATION
FH	FIRE HYDRANT
FL	FLOW LINE
FM	FORCE MAIN (2)
G	GAS
GM	GAS METER
GV	GAS VALVE
GR	GROUNDING WIRE
HP	HORSE POWER
INV	INVERT
I/A	INACCESSIBLE
LF	LINEAR FEET (2)
MG	MATCH GRADE
MH	MANHOLE
MISC	MISCELLANEOUS
MOI	MANUAL OIL INTERCEPTOR (2)
N/F	NOT FOUND (2)
NEC	NATIONAL ELECTRICAL CODE (2)
NTS	NOT TO SCALE
OH	OVERHEAD
PED	PEDESTAL
PIV	POST INDICATOR VALVE
PP	POWER POLE
PVC	POLYVINYL CHLORIDE
RCP	REINFORCED CONCRETE PIPE
SCO	SANITARY CLEANOUT
SD	STORM DRAIN
SMH	SANITARY MANHOLE
SS	SANITARY SEWER
SSV	SANITARY SEWER VALVE
STA	STATION
TBM	TEMPORARY BENCHMARKS
TRANS	TRANSFORMER
TYP	TYPICAL
UC	UNDERGROUND COMMUNICATION
UE	UNDERGROUND ELECTRIC
V	VOLTAGE
W/	WITH
W	WATER
WV	WATER VALVE
WM	WATER METER

STM	DESCRIPTION	DATE	APPR
2	REVISED ABBREV AND LEGEND	6/1/2016	
1	FINAL SUBMISSION	5/2/2016	

NAVFAC

COMMONWEALTH OF VIRGINIA — BRIAN SCOTT CHEWNING — Lic. No. 038283 — 6/1/16 — PROFESSIONAL ENGINEER — SEAL

the PROTECTION ENGINEERING GROUP
14585 Avion Parkway, Suite 150 Chantilly, Virginia 20151 703-488-9995 fax: 703-488-9994 www.PEGroup-Inc.com

PENNONI ASSOCIATES INC.
349 Southport Circle, Suite 100
Virginia Beach, Virginia 23452
T 757.497.7472 F 757.497.0250

A/E INFO

APPROVED

FOR COMMANDER NAVFAC

ACTIVITY

SATISFACTORY TO

DES AT DRW RSP CHK BSC

PM/DM KPL/IAS

BRANCH MANAGER

CHIEF ENG/ARCH Mark J. Airaghi, PE

FIRE PROTECTION

DEPARTMENT OF THE NAVY
NAVAL FACILITIES ENGINEERING COMMAND ~ MID-ATLANTIC
HAMPTON ROADS IPT
NAVAL FACILITIES ENGINEERING COMMAND
NAS OCEANA – VIRGINIA BEACH, VIRGINIA
NAVAL AIR STATION OCEANA
VIRGINIA BEACH, VIRGINIA

HANGAR 111 FIRE PROTECTION AND STRUCTURAL REPAIRS

REFERENCE SHEET - ABBR. & LEGEND - CIVIL

SCALE: NO SCALE
EPROJECT NO.: 1372146
CONSTR. CONTR. NO.
NAVFAC DRAWING NO. 12716237
SHEET 15 OF 170

C-002

DRAWFORM REVISION: 10 MAY 2014

FILE NAME: N:\PROJECTS\GHDG\1501-Hangar 111\DESIGN_PUBLISH\1372146_C-002.dwg LAYOUT NAME: C-002 PLOTTED: Tuesday, May 31, 2016 - 11:50am USER: RPanfil

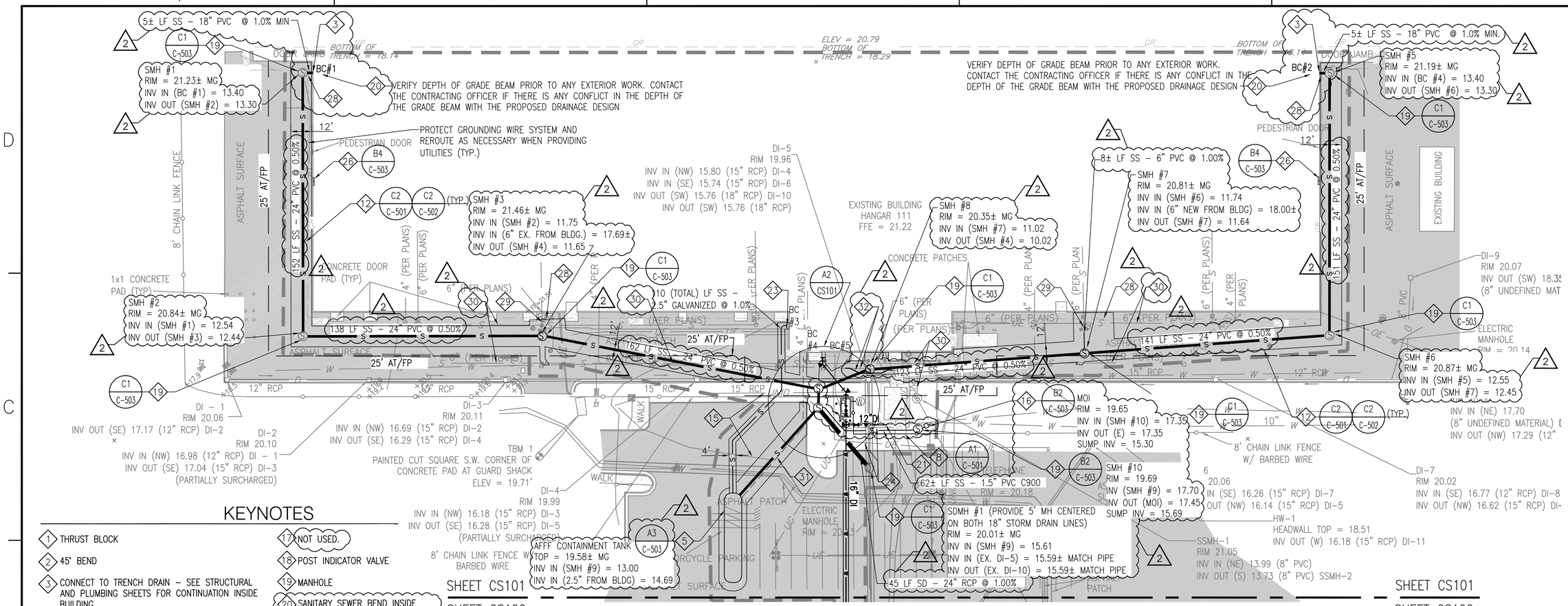

KEYNOTES

1. THRUST BLOCK
2. 45° BEND
3. CONNECT TO TRENCH DRAIN – SEE STRUCTURAL AND PLUMBING SHEETS FOR CONTINUATION INSIDE BUILDING.
4. FIRE DEPARTMENT CONNECTION IN PIT. TOP = 20.67
5. AFFF CONTAINMENT TANK (1–25,000 GALLON TANK)
6. DRY WELL
7. DUCKBILL CHECK VALVE
8. PROVIDE APPROX. 95 L.F. (TOTAL) 8' CHAIN–LINK W/ BARBED WIRE FENCE IMMEDIATELY UPON UTILITY INSTALLATION. MONITOR ABSENCE OF FENCING TO ENSURE SECURITY MEASURES.
9. PROVIDE CURB AND GUTTER.
10. PROVIDE CURB.
11. MANHOLE WITH 115 V, 60 HERTZ, SINGLE PHASE NEC CLASS 1, DIVISION 1 SUBMERSIBLE PUMP, CAPABLE OF 25 GPM AT 15' TOTAL DYNAMIC HEAD, WITH A LIFTING CHAIN AND A FLOAT SWITCH. PROVIDE COMPONENTS THAT ARE UL LISTED OR FM APPROVED.
12. PAVEMENT PATCH/UTILITY TRENCH
13. GUARD POST (4 TOTAL)
14. CONNECT TO NEW 16" WATER LINE W/ 12" GATE VALVE AND 12" X 16" X 16" TEE AND THRUST BLOCK.
15. VERIFY UNDERGROUND UTILITY. REROUTE TO AVOID NEW UTILITIES.
16. MANUAL OIL INTERCEPTOR (MOI)
17. NOT USED.
18. POST INDICATOR VALVE
19. MANHOLE
20. SANITARY SEWER BEND INSIDE BUILDING – SEE STRUCTURAL AND PLUMBING SHEETS FOR CONTINUATION INSIDE BUILDING.
21. CONNECT TO EXISTING 12" WATER LINE WITH METAL FLANGE COUPLING.
22. BUILDING CONNECTION FOR 16" WATER LINE. SEE FX402 FOR CONTINUATION INSIDE BUILDING.
23. BUILDING CONNECTION FOR 2.5" SANITARY SEWER. SEE FX403 DETAIL A1 FOR CONTINUATION INSIDE BUILDING.
24. VERIFY LOCATION OF UNDERGROUND ELECTRICAL AND GAS UTILITIES. REROUTE TO AVOID NEW UTILITIES.
25. 2 – 1" PVC CONDUITS FOR POWER AND CONTROLS TO AFFF CONTAINMENT TANK AND SUBMERSIBLE PUMP. PROVIDE PULL BOXES AT EACH TAP TO 1" PVC CONDUITS.
26. CONTROL PANEL IN HANGAR FOR SUBMERSIBLE PUMP/ CONTAINMENT TANK.
27. NOT USED.
28. CONFLICT LOCATION WITH GROUNDING WIRE. PROTECT GROUNDING WIRE SYSTEM AND REROUTE AS NECESSARY.
29. CONNECT EXISTING 6" SANITARY SEWER LINE TO NEW SMH.
30. EXISTING SANITARY SEWER TO REMAIN AND PROTECT IN PLACE.
31. 1" PVC CONDUIT FOR POWER AND CONTROLS TO AFFF CONTAINMENT TANK AND SUBMERSIBLE PUMP.
32. RELOCATE FIRE LINE TO AVOID NEW UNDERGROUND UTILITY BY ISOLATING LINE BETWEEN NEAREST VALVES. MAXIMUM LENGTH OF TIME ALLOWED FOR DOWN TIME IS 4 HOURS. FIRE LINE SERVES BASE FIRE HYDRANTS. COORDINATE ANY DISRUPTIONS WITH CONTRACTING OFFICER.

1 LAYOUT, MATERIALS, GRADING AND DRAINAGE PLAN

SCALE: 1" = 30'

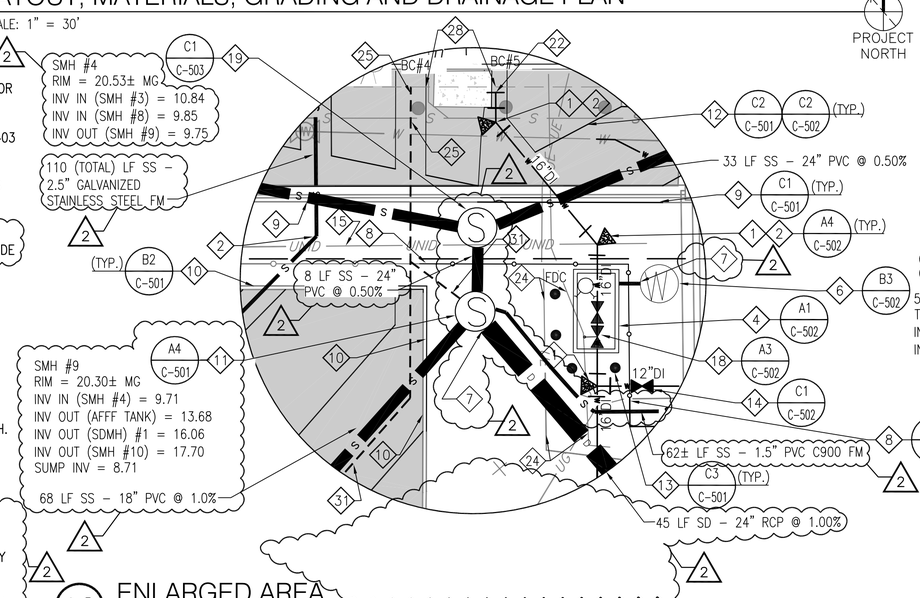

A2 ENLARGED AREA

SCALE: 1" = 10'

CS101

NOTES

1. AS–BUILT PLANS WERE USED TO IDENTIFY THE SIZE AND TYPE OF UTILITY LINES FOUND WITH THE TOPOGRAPHIC AND UNDERGROUND UTILITY SURVEY. AS–BUILT PLANS INCLUDE JOB ORDER NO. 5F4081, AIRCRAFT MAINTENANCE HANGAR, NAVAL AIR STATION, OCEANA, VIRGINIA BEACH, VIRGINIA, DATED MARCH 1986. A MARKED–UP AS BUILT WAS PROVIDED SHOWING THE 18–INCH HIGH PRESSURE LINE FROM THE PUMP HOUSE AS WELL AS A 12–INCH HIGH PRESSURE WATER LINE FROM BUILDING 122. THE AS–BUILT USED IS FROM JOB ORDER NO. 5346164, UTILITY MAPS, NAVAL AIR STATION, OCEANA, VIRGINIA BEACH, VIRGINIA, DATED MAY 1996.
2. COORDINATE FLIGHT LINE FENCE REMOVAL AND INSTALLATION WITH THE CONTRACTING OFFICER PRIOR TO COMMENCING WORK. BREAKS IN THE FENCE ARE NOT PERMITTED DURING OFF WORK HOURS OR WEEKENDS DUE TO SECURITY REASONS.
3. ALL PROPOSED/REPLACED PAVEMENT/CURB/TURF TO MATCH GRADE UNLESS OTHERWISE NOTED.
4. PROTECT EXISTING UTILITIES AT EACH NEW UTILITY CROSSING. EXISTING UTILITIES TO REMAIN IN SERVICE AT ALL TIMES.

CAUTION: IF THIS PLAN IS A REDUCTION, GRAPHIC SCALE MUST BE USED

0 30' 60'
1" = 30'–0

0 10' 20'
1" = 10'–0

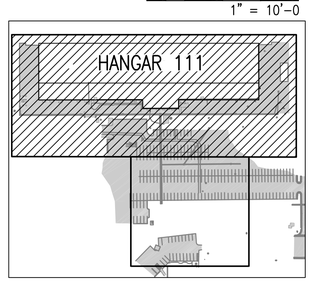

CALL BEFORE YOU DIG

ALWAYS CALL 811 BEFORE YOU DIG IN VIRGINIA

CALL 1-800-552-7001

SECTION 56–265.17 REQUIRES THREE WORKING DAYS NOTICE TO UTILITIES BEFORE YOU EXCAVATE, DRILL OR BLAST VIRGINIA UTILITY PROTECTION SERVICE, INC.

SYM	DESCRIPTION	DATE	APPR
2	REVISED PIPE DEPTH	6/1/2016	
1	FINAL SUBMISSION	5/2/2016	

NAVFAC

COMMONWEALTH OF VIRGINIA
BRIAN SCOTT CHEWNING
Lic. No. 038283
6/1/16
PROFESSIONAL ENGINEER
SEAL

the PROTECTION ENGINEERING GROUP
14585 Avion Parkway, Suite 150 703-488-9900
Chantilly, Virginia 20151 fax: 703-488-9994
www.PEGroup-Inc.com

PENNONI ASSOCIATES INC.
349 Southport Circle, Suite 100
Virginia Beach, Virginia 23452
T 757.497.7472 F 757.497.0250
A/E INFO

APPROVED

FOR COMMANDER NAVFAC

ACTIVITY

SATISFACTORY TO

DES	AT	DRW	RSP	CHK	BSG

PM/DM KPL/IAS

BRANCH MANAGER

CHIEF ENG/ARCH Mark J. Airaghi, PE

FIRE PROTECTION

NAVAL FACILITIES ENGINEERING COMMAND
NAVAL FACILITIES ENGINEERING COMMAND ~ MID-ATLANTIC
NAS OCEANA – VIRGINIA BEACH, VIRGINIA
VIRGINIA BEACH, VIRGINIA

DEPARTMENT OF THE NAVY
NAVAL FACILITIES ENGINEERING COMMAND
HAMPTON ROADS PPT
NAVAL AIR STATION OCEANA

HANGAR 111 FIRE PROTECTION AND STRUCTURAL REPAIRS

LAYOUT, MATERIALS, GRADING AND DRAINAGE PLAN

SCALE: 1" = 30'

EPROJECT NO.: 1372146

CONSTR. CONTR. NO.

NAVFAC DRAWING NO. 12716241

SHEET 19 OF 170

CS101

DRAWFORM REVISION: 10 MAY 2014

FILE NAME: N:\PROJECTS\GHGO\1501-Hangar 111\DESIGN_PUBLISH\1372146_CS101.dwg LAYOUT NAME: CS101 PLOTTED: Thursday, June 02, 2016 – 4:27pm USER: RPortill

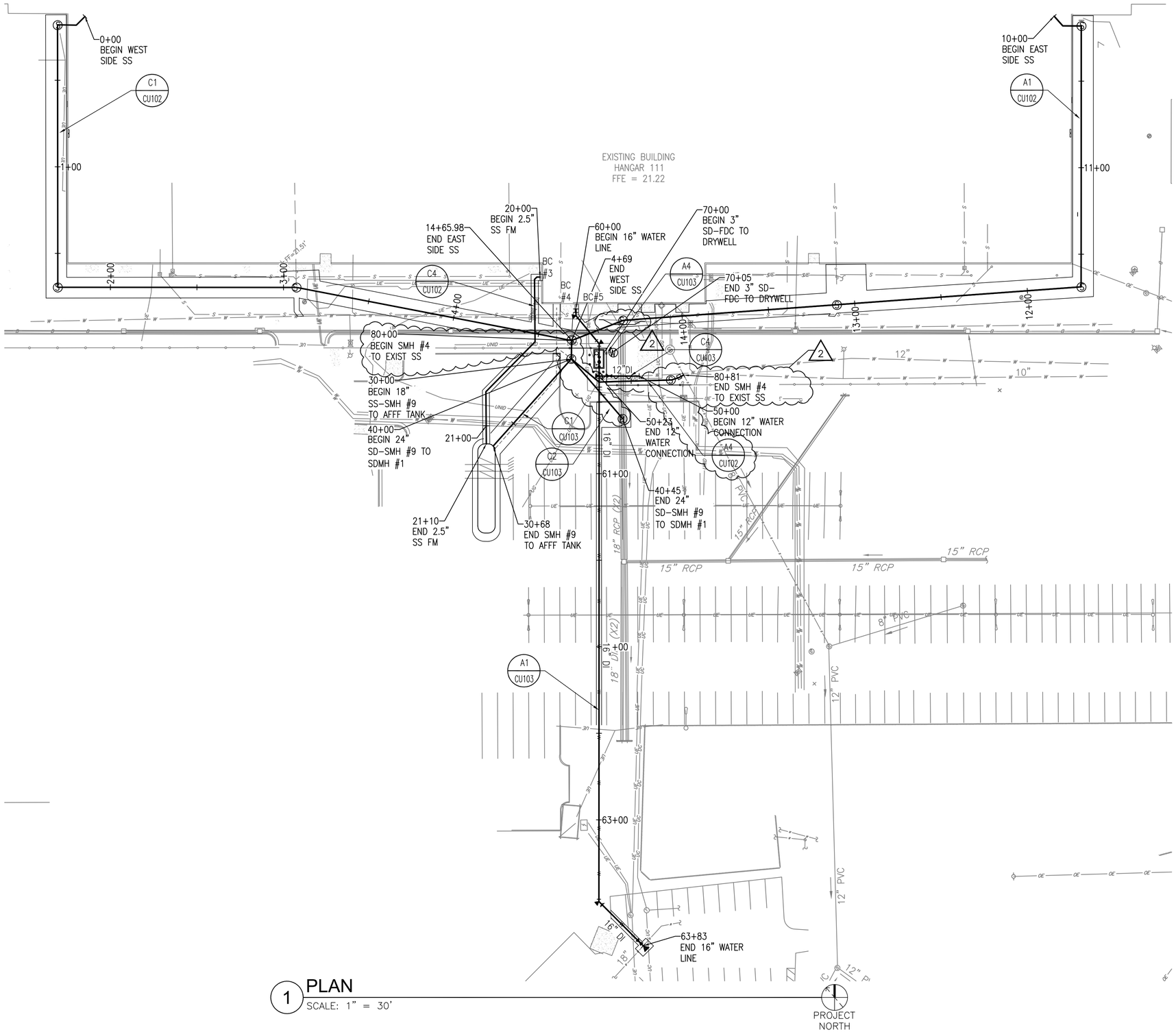

1 PLAN
SCALE: 1" = 30'

CAUTION: IF THIS PLAN IS A REDUCTION, GRAPHIC SCALE MUST BE USED
0 30' 60'
1" = 30'-0

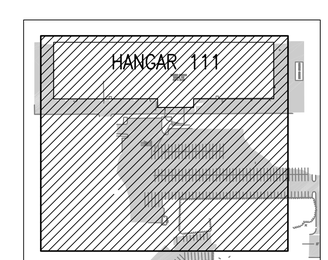

SYM	DESCRIPTION	DATE	APPR
2	REVISED PIPE DEPTH	6/1/2016	
1	FINAL SUBMISSION	5/2/2016	

NAVFAC

COMMONWEALTH OF VIRGINIA
BRIAN SCOTT CHEWNING
Lic. No. 038283
6/1/16
PROFESSIONAL ENGINEER
SEAL

the PROTECTION ENGINEERING GROUP
14585 Avion Parkway, Suite 150 703-488-9995
Chantilly, Virginia 20151 fax: 703-488-9994
www.PEGroup-Inc.com

PENNONI ASSOCIATES INC.
349 Southport Circle, Suite 100
Virginia Beach, Virginia 23452
T 757.497.7472 F 757.497.0250
A/E INFO

APPROVED
FOR COMMANDER NAVFAC
ACTIVITY
SATISFACTORY TO
DES AT DFW RSP CHK BSC
PM/DM KPL/IAS
BRANCH MANAGER
CHIEF ENG/ARCH Mark J. Airaghi, PE
FIRE PROTECTION

DEPARTMENT OF THE NAVY
NAVAL FACILITIES ENGINEERING COMMAND
HAMPTON ROADS IPT
NAVAL FACILITIES ENGINEERING COMMAND – MID-ATLANTIC
NAS OCEANA – VIRGINIA BEACH, VIRGINIA
NAVAL AIR STATION OCEANA
VIRGINIA BEACH, VIRGINIA

HANGAR 111 FIRE PROTECTION AND STRUCTURAL REPAIRS

PROFILE STATIONING - CIVIL

SCALE: AS SHOWN
EPROJECT NO.: 1372146
CONSTR. CONTR. NO.
NAVFAC DRAWING NO. 12716243
SHEET 21 OF 170

CU101

DRAWFORM REVISION: 10 MAY 2014

FILE NAME: N:\PROJECTS\GHDG\1501-Hangar 111\DESIGN_PUBLISH\1372146_CU101.dwg LAYOUT NAME: CU101 PLOTTED: Wednesday, June 01, 2016 - 3:15pm USER: RPontil

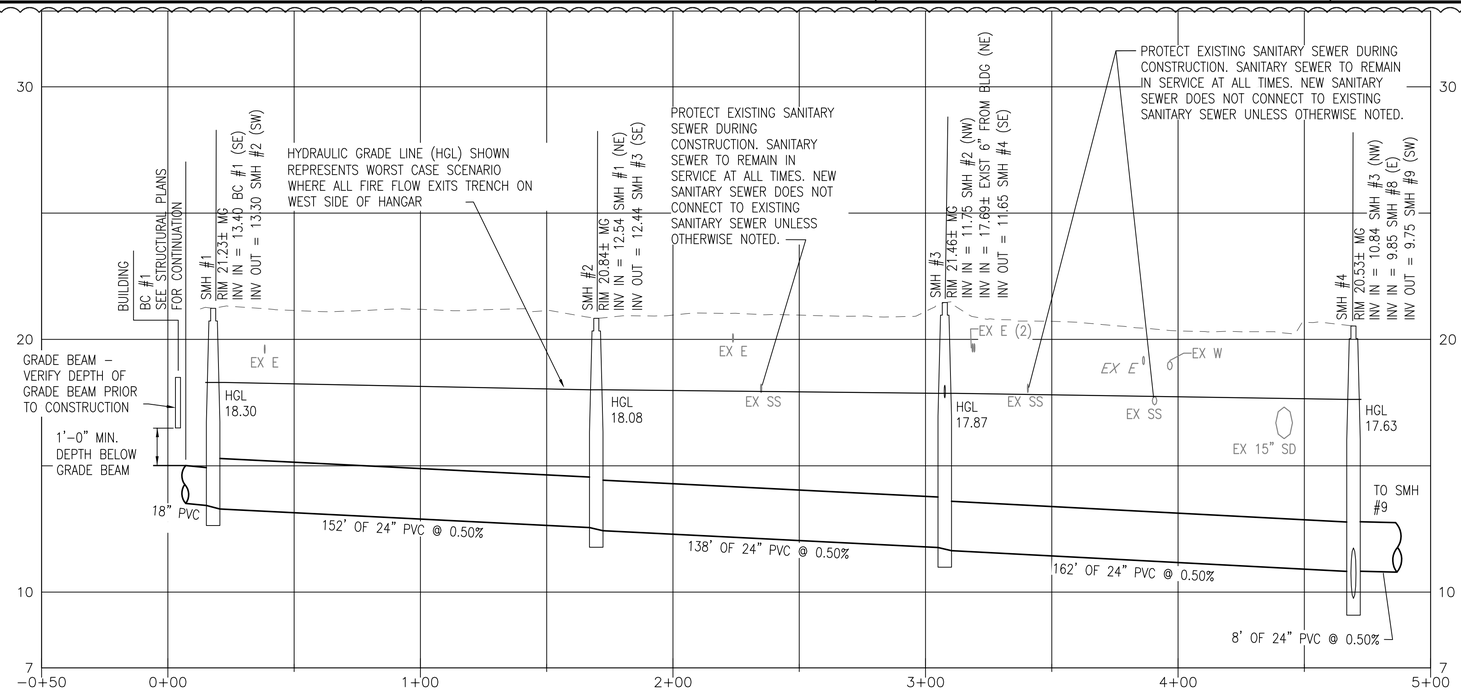

C1 WEST SIDE SANITARY SEWER PROFILE (SS)

SCALE: HORIZ: 1" = 30' VERT: 1" = 3'

CU101

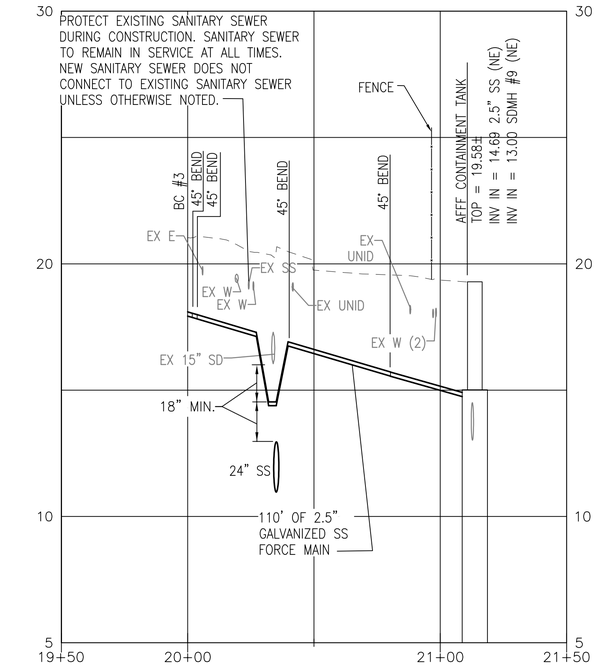

C4 2.5" FORCE MAIN TO AFFF TANK PROFILE (SS)

SCALE: HORIZ: 1" = 30' VERT: 1" = 3'

CU101

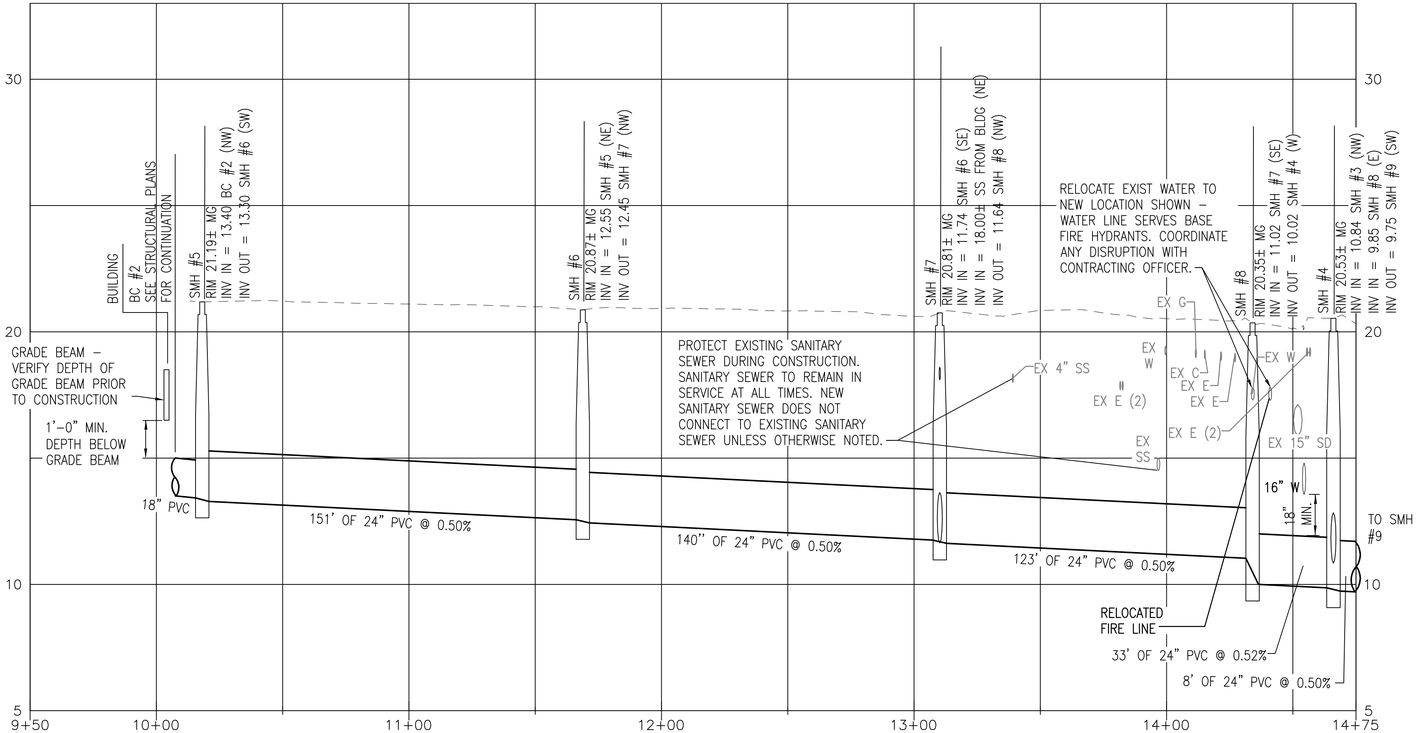

A1 EAST SIDE SANITARY SEWER PROFILE (SS)

SCALE: HORIZ: 1" = 30' VERT: 1" = 3'

CU101

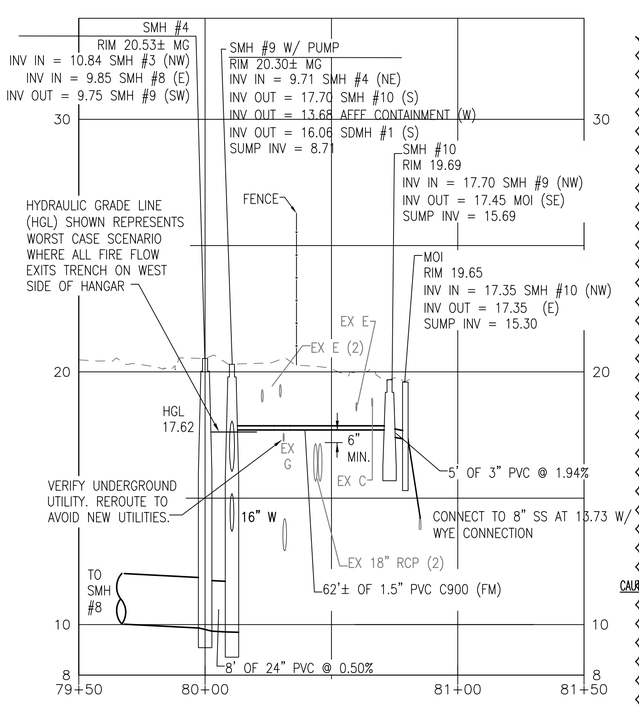

A4 SMH #4 TO EXIST SANITARY SEWER PROFILE (SS)

SCALE: HORIZ: 1" = 30' VERT: 1" = 3'

CU101

CAUTION: IF THIS PLAN IS A REDUCTION, GRAPHIC SCALE MUST BE USED

0 3' 6'
1" = 3'–0

0 30' 60'
1" = 30'–0

SYM	DESCRIPTION	DATE	APPR
2	REVISED PIPE DEPTHS	6/1/2016	
1	FINAL SUBMISSION	5/2/2016	

NAVFAC

COMMONWEALTH OF VIRGINIA
BRIAN SCOTT CHEWNING
Lic. No. 038283
6/1/16
PROFESSIONAL ENGINEER
SEAL

the PROTECTION ENGINEERING GROUP
14585 Avion Parkway, Suite 150 703-488-9955
Chantilly, Virginia 20151 fax: 703-488-9994
www.PEGroup-Inc.com

PENNONI ASSOCIATES INC.
349 Southport Circle, Suite 100
Virginia Beach, Virginia 23452
T 757.497.7472 F 757.497.0250
A/E INFO

APPROVED

FOR COMMANDER NAVFAC

ACTIVITY

SATISFACTORY TO

DES	AT	DRW	RSP	CHK	BSC

PM/DM KPL/IAS

BRANCH MANAGER

CHIEF ENG/ARCH Mark J. Airaghi, PE

FIRE PROTECTION

DEPARTMENT OF THE NAVY
NAVAL FACILITIES ENGINEERING COMMAND
HAMPTON ROADS IPT

NAVAL FACILITIES ENGINEERING COMMAND ~ MID-ATLANTIC
NAS OCEANA – VIRGINIA BEACH, VIRGINIA

NAVAL AIR STATION OCEANA
VIRGINIA BEACH, VIRGINIA

HANGAR 111 FIRE PROTECTION AND STRUCTURAL REPAIRS

PROFILES - CIVIL

SCALE: AS SHOWN

EPROJECT NO.: 1372146

CONSTR. CONTR. NO.

NAVFAC DRAWING NO.
12716244

SHEET 22 OF 170

CU102

DRAWFORM REVISION: 10 MAY 2014

FILE NAME: N:\PROJECTS\GHDG\1501-Hangar 111\DESIGN_PUBLISH\1372146_CU102.dwg LAYOUT NAME: CU102 PLOTTED: Thursday, June 02, 2016 - 4:32pm USER: RPonfil

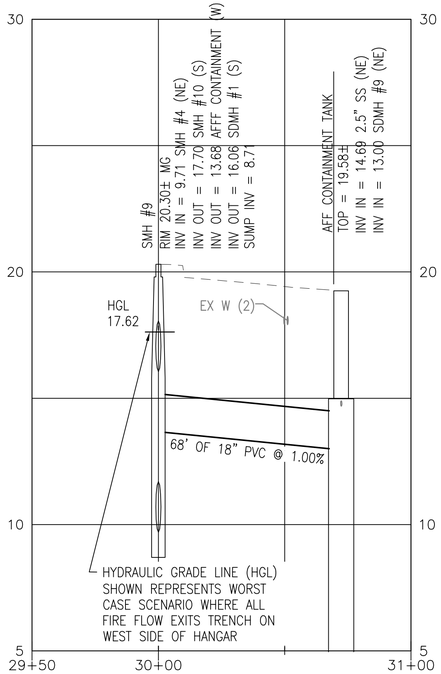

C1 SMH #9 TO AFFF TANK PROFILE (SS)

SCALE: HORIZ: 1" = 30' VERT: 1" = 3' CU101

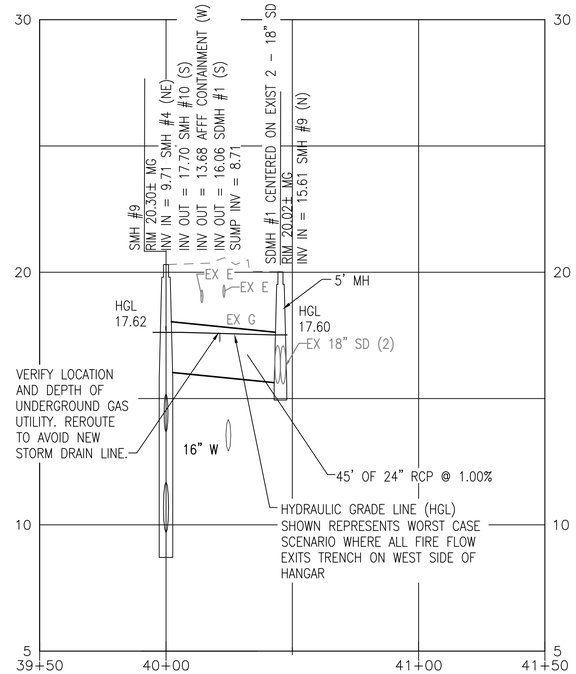

C2 SMH #9 TO SDMH #1 (SD)

SCALE: HORIZ: 1" = 30' VERT: 1" = 3' CU101

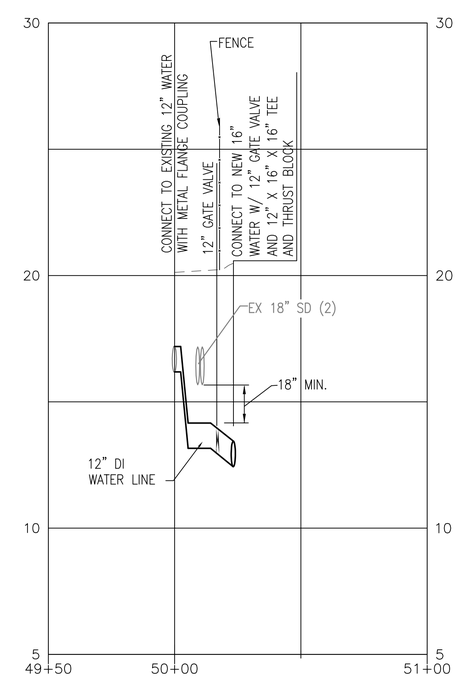

C4 12" WATER CONNECTION PROFILE (W)

SCALE: HORIZ: 1" = 30' VERT: 1" = 3' CU101

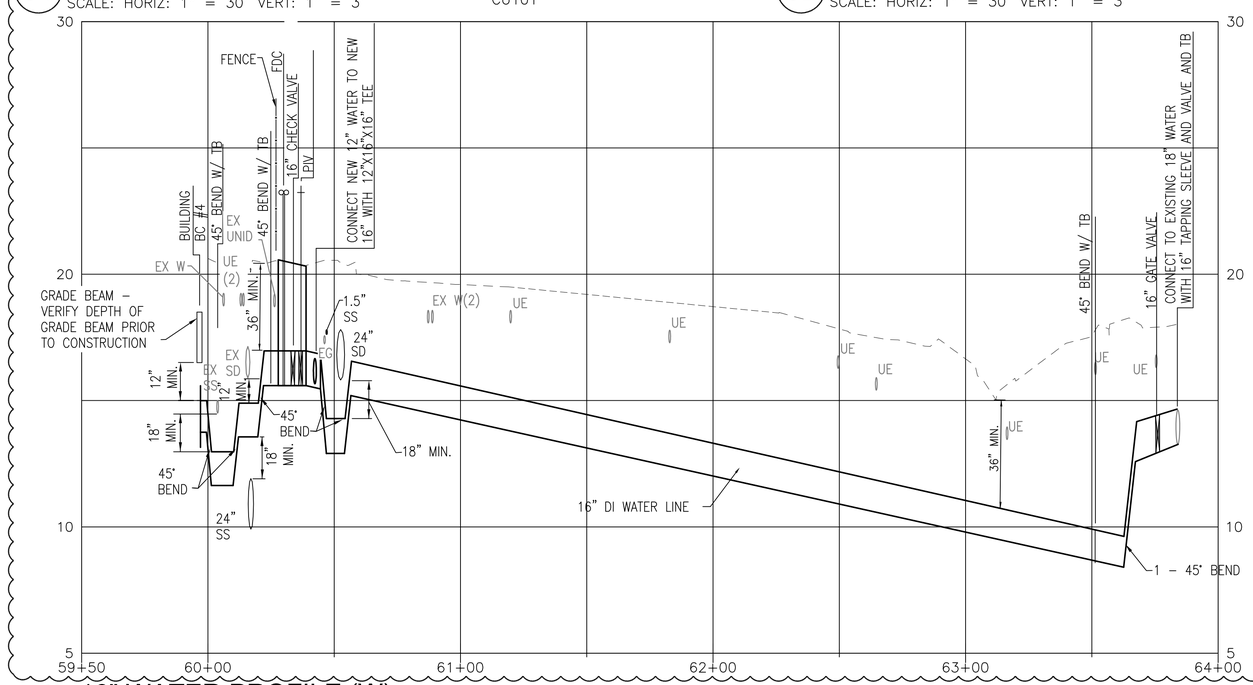

A1 16" WATER PROFILE (W)

SCALE: HORIZ: 1" = 30' VERT: 1" = 3' CU101

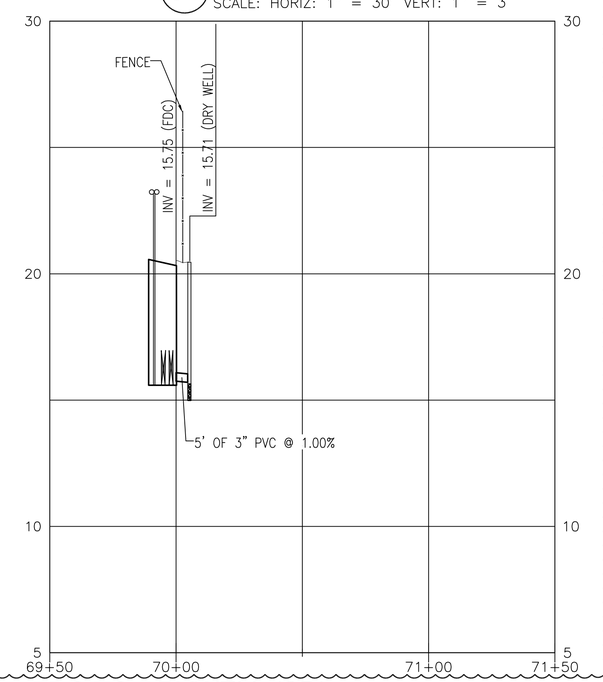

A4 FDC TO DRYWELL (SD)

SCALE: HORIZ: 1" = 30' VERT: 1" = 3' CU101

NOTE

1. RESTRAIN ALL JOINTS FOR WATER LINES 12" AND LARGER.

CAUTION: IF THIS PLAN IS A REDUCTION, GRAPHIC SCALE MUST BE USED

0 3' 6'
1" = 3'–0

0 30' 60'
1" = 30'–0

STM	DESCRIPTION	DATE	APPR
2	REVISED PIPE DEPTH	6/1/2016	
1	FINAL SUBMISSION	5/2/2016	

NAVFAC

COMMONWEALTH OF VIRGINIA
BRIAN SCOTT CHEWNING
Lic. No. 038283
6/1/16
PROFESSIONAL ENGINEER
SEAL

the PROTECTION ENGINEERING GROUP
14585 Avion Parkway, Suite 150 703-488-9955
Chantilly, Virginia 20151 fax: 703-488-9994
www.PEGroup-Inc.com

PENNONI ASSOCIATES INC.
349 Southport Circle, Suite 100
Virginia Beach, Virginia 23452
T 757.497.7472 F 757.497.0250
A/E INFO.

APPROVED

FOR COMMANDER NAVFAC

ACTIVITY

SATISFACTORY TO

DES	AT	DRW	RSP	CHK	BSC

PM/DM KPL/IAS

BRANCH MANAGER

CHIEF ENG/ARCH Mark J. Airaghi, PE

FIRE PROTECTION

DEPARTMENT OF THE NAVY
NAVAL FACILITIES ENGINEERING COMMAND
HAMPTON ROADS IPT

NAVAL FACILITIES ENGINEERING COMMAND ~ MID-ATLANTIC
NAS OCEANA – VIRGINIA BEACH, VIRGINIA

NAVAL AIR STATION OCEANA
VIRGINIA BEACH, VIRGINIA

HANGAR 111 FIRE PROTECTION AND STRUCTURAL REPAIRS

PROFILES - CIVIL

SCALE: AS SHOWN

EPROJECT NO.: 1372146

CONSTR. CONTR. NO.

NAVFAC DRAWING NO. 12716245

SHEET 23 OF 170

CU103

DRAWFORM REVISION: 10 MAY 2014

FILE NAME: N:\PROJECTS\GHDG\1501-Hangar 111\DESIGN_PUBLISH\1372146_CU103.dwg LAYOUT NAME: CU103 PLOTTED: Wednesday, June 01, 2016 – 10:04am USER: RPorfili

NOTE: STANDARD CURB SHAPE OF THE STATE IN WHICH THE PROJECT IS LOCATED MAY BE SUBSTITUTED.

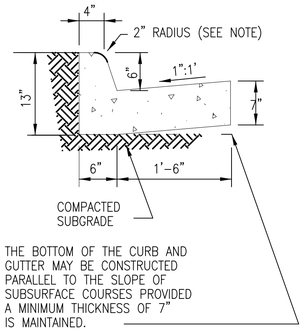

C1 CURB AND GUTTER

NOT TO SCALE — CS101

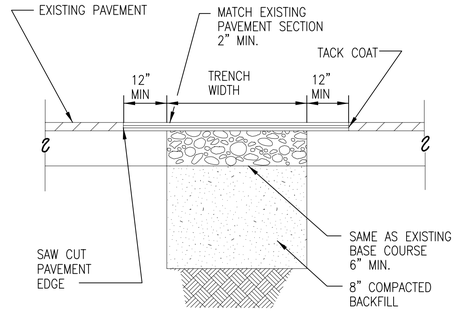

C2 PAVEMENT PATCH

NOT TO SCALE — CS101, CS102

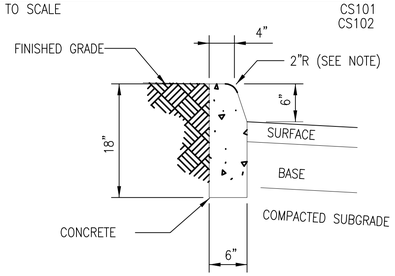

NOTE: STANDARD CURB SHAPE OF THE STATE IN WHICH THE PROJECT IS LOCATED MAY BE SUBSTITUTED.

B2 CURB

NOT TO SCALE — CS101

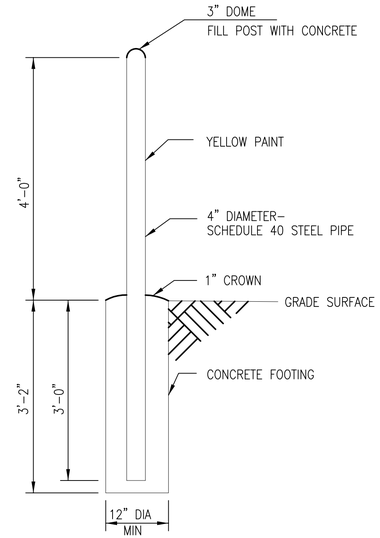

C3 GUARD POST

NOT TO SCALE — CS101

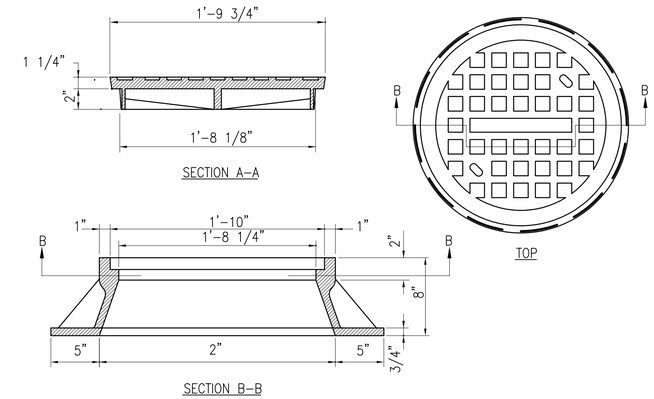

C4 MANHOLE FRAME AND COVER

NOT TO SCALE — CS501, CS502, CS503

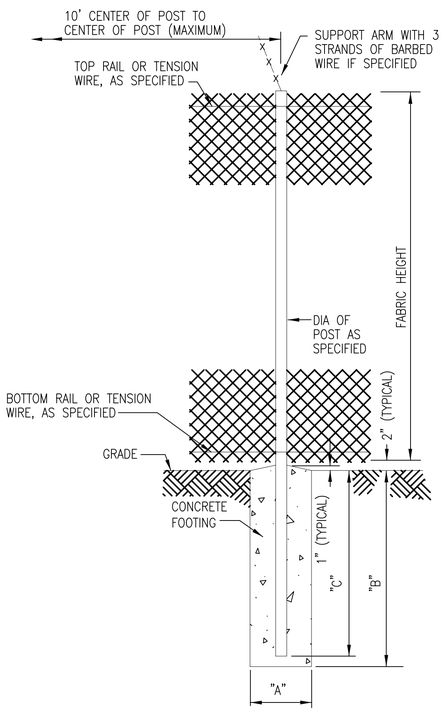

LINE AND TERMINAL POSTS

FABRIC HEIGHT	TYPE POST	"A" DIAM	"B" DEPTH	"C" POST EMBEDMENT
8'-0"	LINE	12"	38"	36"
	TERMINAL	12"	38"	36"

NOTE: TERMINAL POSTS INCLUDE END, CORNER, AND PULL POSTS

A1 CHAIN LINK FENCE

NOT TO SCALE — CS501

2

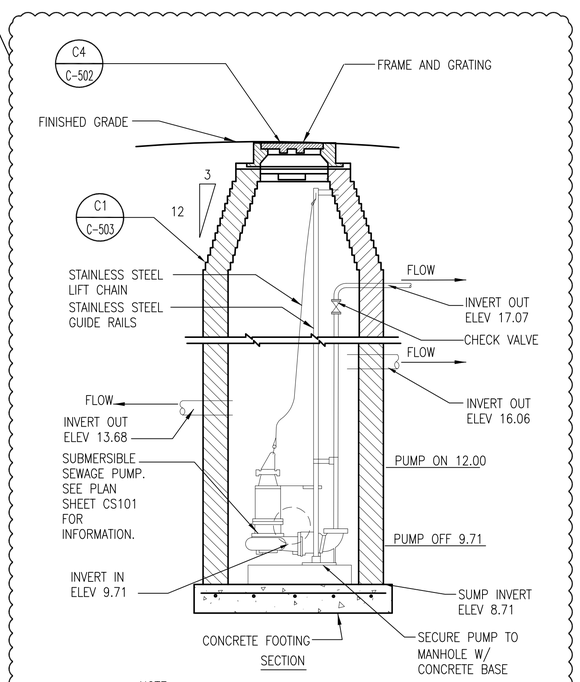

NOTE:
1. DETAIL DESCRIBES SUBMERSIBLE PUMP RELATIONSHIP WITH MANHOLE. SEE MANHOLE DETAIL C1 ON SHEET C-503 FOR COMPLETE MANHOLE INFORMATION.
2. SEE PLAN SHEET CS101 FOR ELECTRICAL SUPPLY FOR PUMP.
3. ALL CONDUIT AND PIPING IN MANHOLE SHALL MEET CLASS 1 DIVISION 1 NEC CRITERIA.

A4 SMH-9 W/ SUBMERSIBLE PUMP

NOT TO SCALE — CS101

SYM	DESCRIPTION	DATE	APPR
1	REVISED PIPE DEPTH	6/1/2016	
1	FINAL SUBMISSION	5/2/2016	

NAVFAC

COMMONWEALTH OF VIRGINIA — BRIAN SCOTT CHEWNING — Lic. No. 038283 — 6/1/16 — PROFESSIONAL ENGINEER — SEAL

the PROTECTION ENGINEERING GROUP
14585 Avion Parkway, Suite 150 Chantilly, Virginia 20151 703-488-9955 fax: 703-488-9994
www.PEGroup-Inc.com

PENNONI ASSOCIATES INC.
349 Southport Circle, Suite 100
Virginia Beach, Virginia 23452
T 757.497.7472 F 757.497.0250
A/E INFO

APPROVED

FOR COMMANDER NAVFAC

ACTIVITY

SATISFACTORY TO

DES AT DRW RSP CHK BSC

PM/DM KPL/IAS

BRANCH MANAGER

CHIEF ENG/ARCH Mark J. Airaghi, PE

FIRE PROTECTION

DEPARTMENT OF THE NAVY
NAVAL FACILITIES ENGINEERING COMMAND
NAVAL FACILITIES ENGINEERING COMMAND ~ MID-ATLANTIC
NAS OCEANA ~ VIRGINIA BEACH, VIRGINIA
HAMPTON ROADS PT
NAVAL AIR STATION OCEANA — VIRGINIA BEACH, VIRGINIA

HANGAR 111 FIRE PROTECTION AND STRUCTURAL REPAIRS

DETAILS - CIVIL

SCALE: NO SCALE
EPROJECT NO.: 1372146
CONSTR. CONTR. NO.
NAVFAC DRAWING NO. 12716246
SHEET 24 OF 170

C-501

DRAWFORM REVISION: 10 MAY 2014

FILE NAME: N:\PROJECTS\GH00\1501-Hangar 111\DESIGN_PUBLISH\1372146_C-501.dwg LAYOUT NAME: C-501 PLOTTED: Tuesday, May 31, 2016 - 12:36pm USER: RPontil

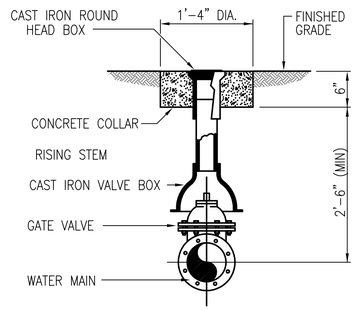

C1 DETAIL - VALVE
NOT TO SCALE — CS101, CS102

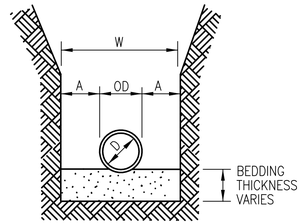

MAXIMUM TRENCH WIDTH "W" TAKEN AT TOP OF PIPE

NOTE: PROVIDE BEDDING IN ACCORDANCE WITH THE SPECIFICATIONS.

PIPE DIA "D"	MAXIMUM "A"
12" OR LESS	8"
16"	10"
24"	12"

2

C2 TRENCH FOR NON-PLASTIC PIPE
NOT TO SCALE — CS101, CS102

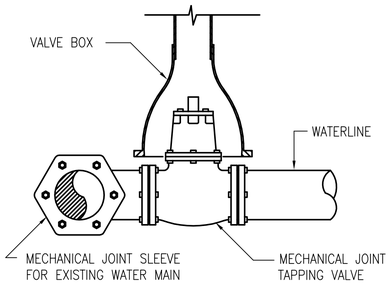

C3 DETAIL - TAPPING SLEEVE
NOT TO SCALE — CS102

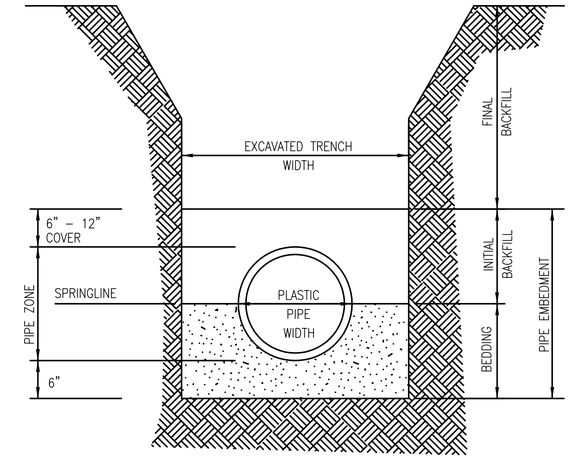

NOTE: PROVIDE BEDDING IN ACCORDANCE WITH THE SPECIFICATIONS.

C4 TRENCH FOR PLASTIC PIPE
NOT TO SCALE — CS101, CS102

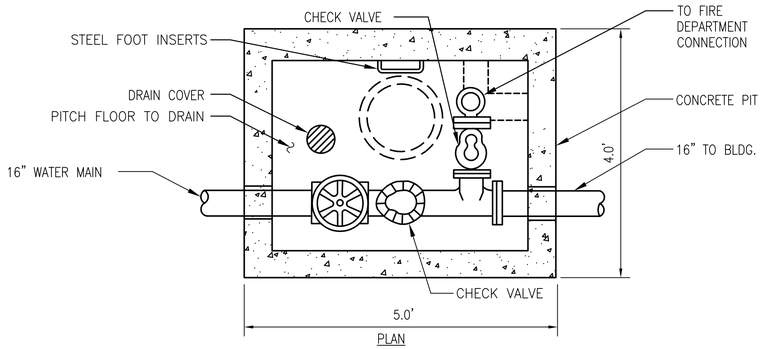

PLAN

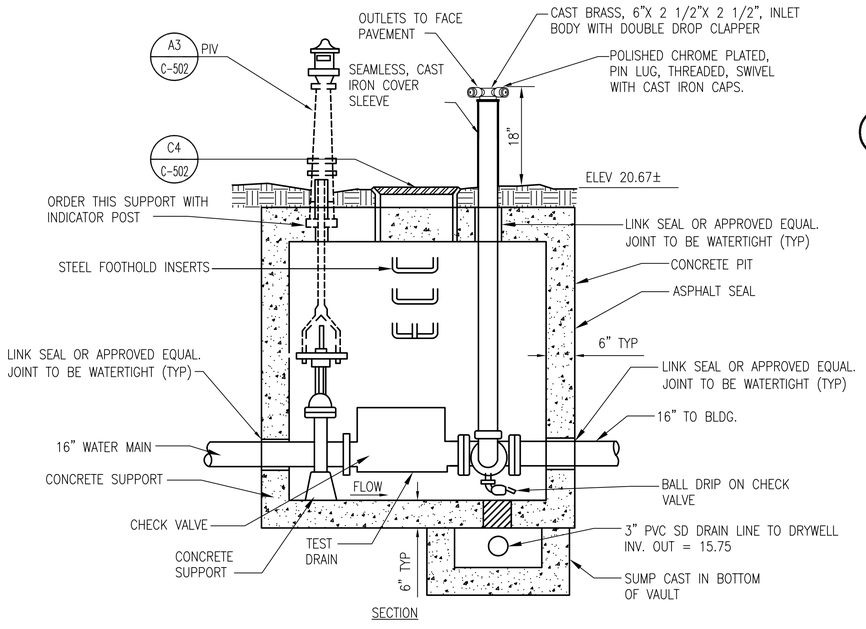

SECTION

A1 FIRE DEPARTMENT CONNECTION PIT
NOT TO SCALE — CS101

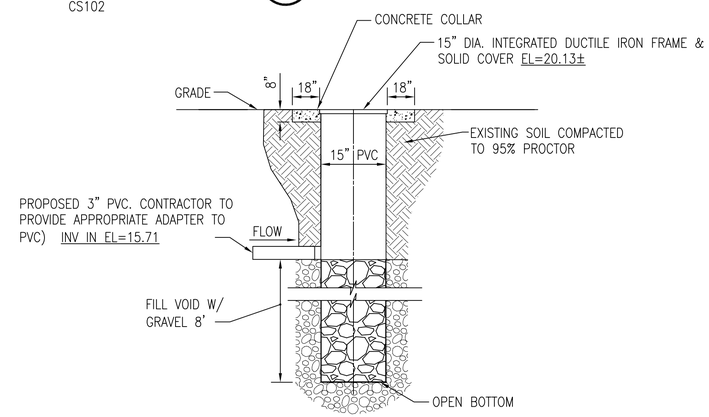

B3 DRY WELL DETAIL
NOT TO SCALE — CS101

FIELD ADJUSTMENT INSTRUCTIONS

1. REMOVE THE BODY FROM THE TOP OF THE INDICATOR POST ASSEMBLY.
2. CUT THE REQUIRED LENGTH OFF THE BOTTOM OF THE STANDPIPE FOR THE GROUND LINE TO MATCH UP WITH STANDPIPE GROUND LINE MARK.
3. CUT THE 1" SQ. EXTENSION AT A DISTANCE OF 9" ABOVE THE TOP OF THE STANDPIPE.
4. SET THE "OPEN" AND "SHUT" TARGETS FOR THE APPROPRIATE VALVE SIZE.
5. REATTACH THE BODY TO THE TOP OF THE INDICATOR POST ASSEMBLY.
6. LOCK AND KEY VALVE PER THE FIRE DEPARTMENT.

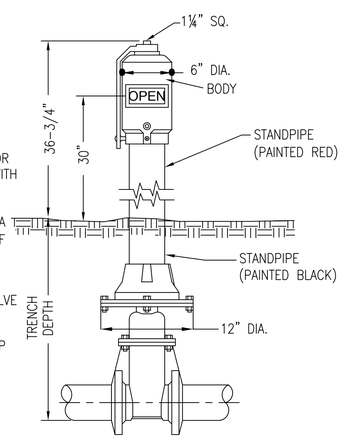

A3 POST INDICATOR VALVE ASSEMBLY
NOT TO SCALE — C-501, C-502

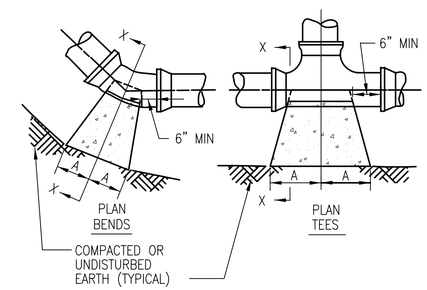

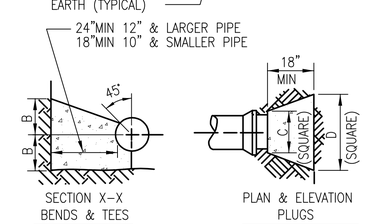

SIZE	1/4 BENDS		1/8 BENDS		1/16 BENDS		TEES		PLUGS	
	A	B	A	B	A	B	A	B	C	D
12"	29"	21"	16"	21"	11"	16"	18"	24"	16"	41"
16"	38"	27"	21"	27"	12"	24"	24"	30"	20"	54"

A4 THRUST BLOCK
NOT TO SCALE — CS101, CS102

1	REVISED PIPE DEPTH	6/1/2016						
1	FINAL SUBMISSION	5/2/2016						
STM	DESCRIPTION	DATE						APPR

NAVFAC

COMMONWEALTH OF VIRGINIA — BRIAN SCOTT CHEWNING — Lic. No. 038283 — 6/1/16 — PROFESSIONAL ENGINEER — SEAL

the PROTECTION ENGINEERING GROUP
14585 Avion Parkway, Suite 150 703-488-9950
Chantilly, Virginia 20151 fax: 703-488-9994
www.PEGroup-Inc.com

PENNONI ASSOCIATES INC.
349 Southport Circle, Suite 100
Virginia Beach, Virginia 23452
T 757.497.7472 F 757.497.0250
A/E INFO

APPROVED

FOR COMMANDER NAVFAC

ACTIVITY

SATISFACTORY TO

DES	AT	DRW	RSP	CHK	BSC

PM/DM KPL/IAS

BRANCH MANAGER

CHIEF ENG/ARCH Mark J. Airaghi, PE

FIRE PROTECTION

DEPARTMENT OF THE NAVY
NAVAL FACILITIES ENGINEERING COMMAND ~ MID-ATLANTIC
HAMPTON ROADS IPT
NAVAL FACILITIES ENGINEERING COMMAND
INS OCEANA – VIRGINIA BEACH, VIRGINIA
NAVAL AIR STATION OCEANA
VIRGINIA BEACH, VIRGINIA
HANGAR 111 FIRE PROTECTION AND STRUCTURAL REPAIRS
DETAILS - CIVIL

SCALE: NO SCALE
EPROJECT NO.: 1372146
CONSTR. CONTR. NO.
NAVFAC DRAWING NO. 12716247
SHEET 25 OF 170
C-502

DRAWFORM REVISION: 10 MAY 2014

FILE NAME: N:\PROJECTS\GHDG\1501-Hangar 111\DESIGN_PUBLISH\1372146_C-502.dwg LAYOUT NAME: C-502 PLOTTED: Tuesday, May 31, 2016 - 10:51am USER: RPonfil

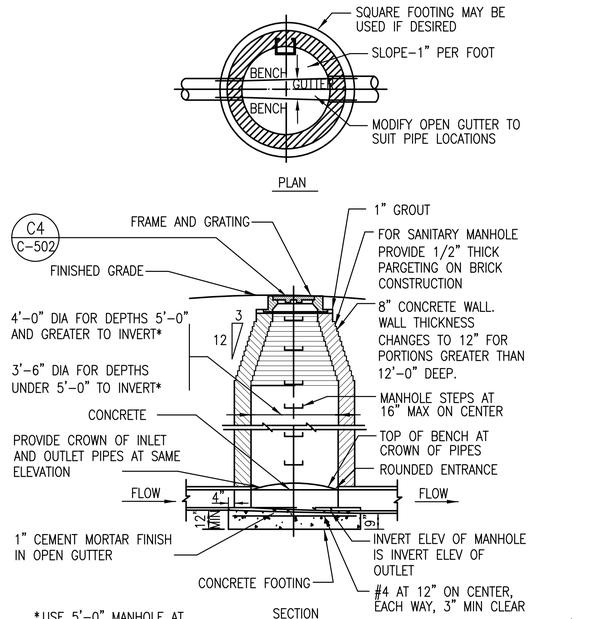

C1 MANHOLE

NOT TO SCALE — CS101 C–501

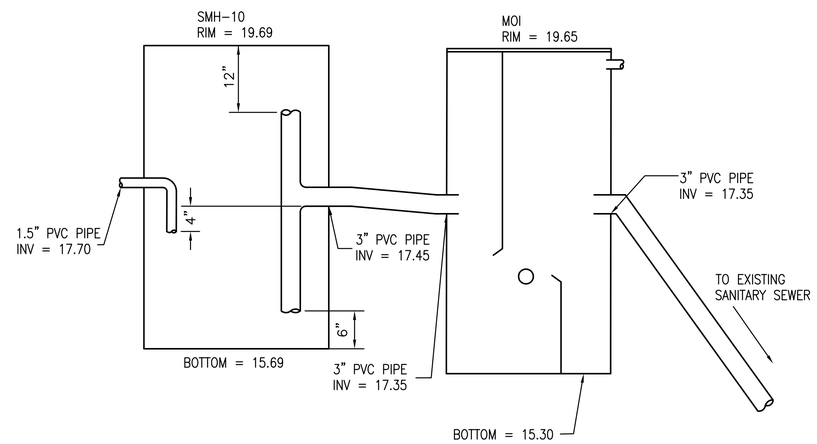

B2 MANUAL OIL INTERCEPTOR (MOI) CONNECTING TO SMH #10

NOT TO SCALE — CS101

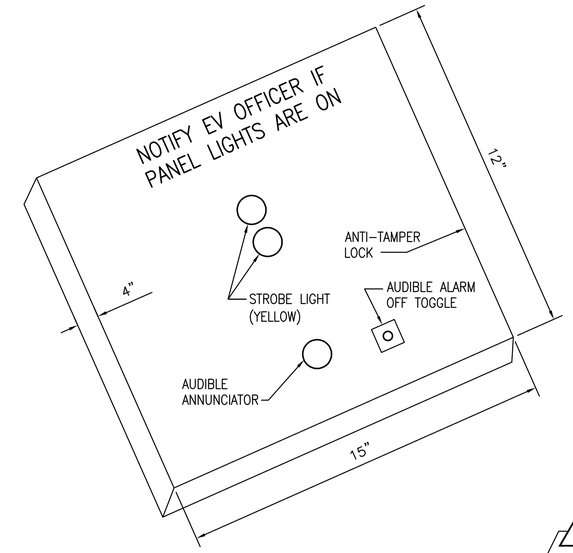

NOTE:

- INCLUDE A 24 HOUR BATTERY BACKUP SYSTEM IN ENVIRONMENTAL PANEL.
- TOP STROBE LIGHT INDICATES WHEN POWER TO THE SUBMERSIBLE PUMP HAS BEEN CUT.
- TOP STROBE LIGHT REMAINS ILLUMINATED UNTIL POWER IS RESTORED TO THE SUBMERSIBLE PUMP.
- BOTTOM STROBE LIGHT INDICATES WHEN THE AFFF TANK CAPACITY LEVEL EXCEEDS 5%.
- BOTTOM STROBE LIGHT REMAINS ILLUMINATED UNTIL AFFF TANK LEVELS RETURN TO NORMAL.
- PANEL PROVIDES POWER TO SUBMERSIBLE PUMP IN SMH–9 POWER WILL DISENGAGE WHEN AFFF SYSTEM IS DEPLOYED.
- PANEL PROVIDES A CONNECTION TO AFFF TANK FLOAT TO REGISTER WHEN THE CAPACITY LEVEL EXCEEDS 5%.
- PROVIDE 0.8" LETTERING ON PANEL, ALL CAPITAL LETTERS AND BLACK IN COLOR.
- PANEL AUDIBLE ANNUNCIATOR MUST SOUND WHEN EITHER STROBE LIGHT IS FLASHING.
- PROVIDE PANEL CABINET, STAINLESS STEEL AND TAN IN COLOR.

B4 ENVIRONMENTAL PANEL

NOT TO SCALE — CS101

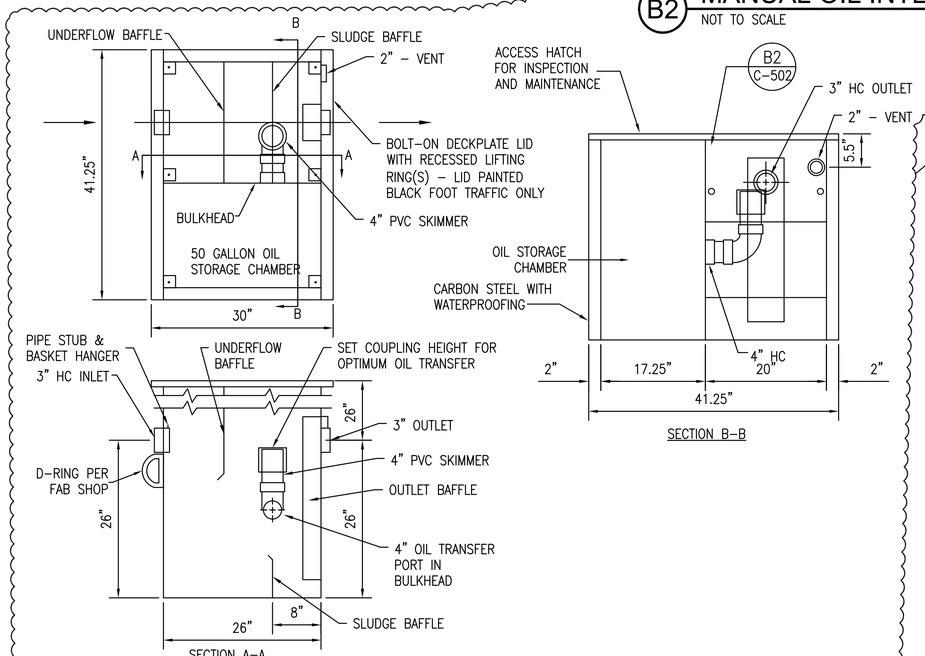

C2 MANUAL OIL INTERCEPTOR (MOI)

NOT TO SCALE — C–503

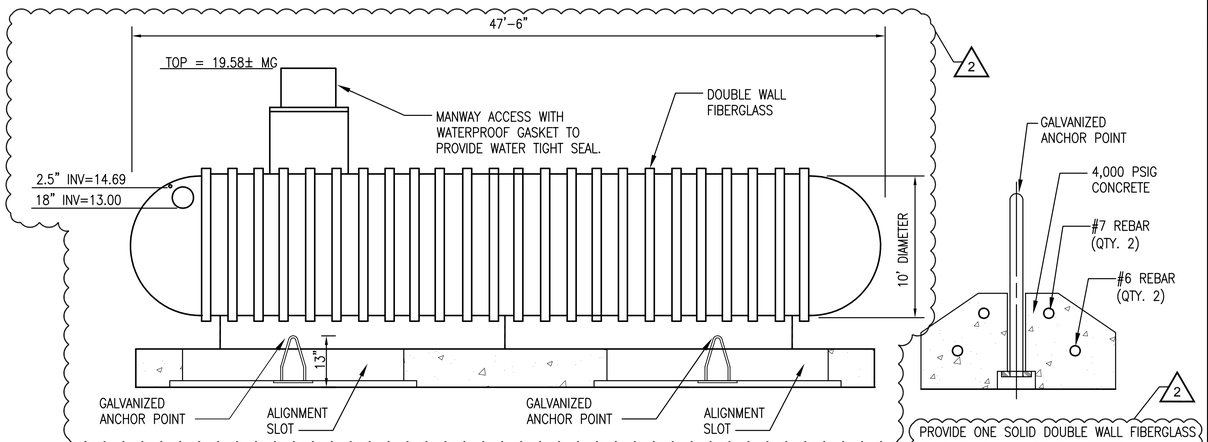

PROVIDE ONE SOLID DOUBLE WALL FIBERGLASS TANK. TANK MAY NOT BE SHIPPED IN SECTIONS AND ASSEMBLED ONSITE. A WATER TIGHT WATERPROOF GASKET MUST BE PROVIDED AT ALL CONNECTIONS TO THE TANK.

FINAL TANK ANCHORING/FOUNDATION DESIGN TO BE IN ACCORDANCE WITH THE MANUFACTURERS RECOMMENDATIONS. THE DESIGN SHOWN IS FOR BIDDING PURPOSES ONLY. CONTRACTOR MUST SUBMIT SHOP DRAWINGS OF THE DESIGN PRIOR TO INSTALLATION.

A3 AFFF TANK - 25,000 GALLON

NOT TO SCALE — CS101

SYM	DESCRIPTION	DATE	APPR
1	REVISED PIPE DEPTH	5/27/2016	
1	FINAL SUBMISSION	5/2/2016	

NAVFAC

COMMONWEALTH OF VIRGINIA — BRIAN SCOTT CHEWNING — Lic. No. 038283 — 6/1/16 — PROFESSIONAL ENGINEER — SEAL

the PROTECTION ENGINEERING GROUP
14585 Avion Parkway, Suite 150 Chantilly, Virginia 20151 703-488-9995 fax: 703-488-9994 www.PEGroup-Inc.com

PENNONI ASSOCIATES INC.
349 Southport Circle, Suite 100
Virginia Beach, Virginia 23452
T 757.497.7472 F 757.497.0250
A/E INFO

APPROVED

FOR COMMANDER NAVFAC ACTIVITY

SATISFACTORY TO

DES	AT	DRW	RSP	CHK	BSC

PM/DM KPL/IAS

BRANCH MANAGER

CHIEF ENG/ARCH Mark J. Airaghi, PE

FIRE PROTECTION

DEPARTMENT OF THE NAVY
NAVAL FACILITIES ENGINEERING COMMAND ~ MID-ATLANTIC
HAMPTON ROADS PT.
NAVAL FACILITIES ENGINEERING COMMAND
NAS OCEANA – VIRGINIA BEACH, VIRGINIA
NAVAL AIR STATION OCEANA
VIRGINIA BEACH, VIRGINIA

HANGAR 111 FIRE PROTECTION AND STRUCTURAL REPAIRS

DETAILS - CIVIL

SCALE: NO SCALE
EPROJECT NO.: 1372146
CONSTR. CONTR. NO.
NAVFAC DRAWING NO. 12716248
SHEET 26 OF 170

C-503

DRAWFORM REVISION: 10 MAY 2014

FILE NAME: N:\PROJECTS\GH00\1501-Hangar 111\DESIGN_PUBLISH\1372146_C-503.dwg LAYOUT NAME: C-503 PLOTTED: Wednesday, June 01, 2016 - 2:02pm USER: RPanfil

EROSION AND SEDIMENT CONTROL NARRATIVE

PROJECT DESCRIPTION
THE CIVIL SCOPE OF THE PROJECT INCLUDES A UTILITY DESIGN, TOPOGRAPHIC AND UNDERGROUND UTILITY SURVEY, AND GEOTECHNICAL EXPLORATION WITHIN THE LIMITS OF THE NEW UNDERGROUND CONTAINMENT TANKS AS WELL AS WITHIN THE LIMITS OF THE NEW 16-INCH WATER MAIN. THE GEOTECHNICAL INVESTIGATION WILL BE USED TO DETERMINE THE GROUND WATER ELEVATION, PAVEMENT PATCH DESIGN, AND EXISTING SOIL TYPES. CIVIL DESIGN WILL INCLUDE THE REQUIRED DEMOLITION, PAVEMENT REPAIRS, AND INSTALLATION OF THE REQUIRED UTILITIES AND EQUIPMENT THAT WILL SERVE THE AQUEOUS FILM-FORMING FOAM (AFFF) FIRE PROTECTION SYSTEM BEING INSTALLED INSIDE THE HANGAR. CORRESPONDING UTILITY IMPROVEMENTS WILL INCLUDE: PROVIDING A 16-INCH WATER MAIN FROM A NEARBY STREET, THROUGH THE HANGAR PARKING LOT, AND INTO HANGAR FOAM ROOM; THE RECONFIGURATION OF THE EXISTING 12-INCH WATER MAIN THAT CURRENTLY SERVES THE HANGAR'S EXISTING FIRE SUPPRESSION SYSTEM; REPLACEMENT OF THE TWO EXISTING OIL/WATER SEPARATORS WITH ONE MANUAL OIL INTERCEPTOR; PROVIDING SANITARY SEWER PIPE NETWORK AROUND THE HANGAR FOR THE AFFF SYSTEM DISCHARGE; PROVIDING FIRE DEPARTMENT CONNECTION AND POST INDICATOR VALVE; AND PROVIDING UNDERGROUND CONTAINMENT TANK FOR THE AFFF DISCHARGE

2

EXISTING SITE CONDITIONS
HANGAR 111 IS LOCATED ON THE NAVAL AIR STATION OCEANA, IN VIRGINIA BEACH, VIRGINIA. TO THE NORTHEAST OF THE HANGAR IS A PARKING APRON AND RUNWAY 32/14, TO THE SOUTHEAST IS AN EXISTING HANGAR, TO THE SOUTHWEST IS 1ST STREET AND TO THE NORTHWEST IS A PARKING APRON AND RUNWAY 23/05. THE EXISTING ELEVATIONS RANGE FROM 16 FEET TO 22 FEET ABOVE MEAN SEA LEVEL. THE SITE CONSIST OF PRIMARILY BITUMINOUS PAVEMENT AND CONCRETE WITH MINIMAL PERVIOUS AREAS. HANGAR 111 IS SERVICED BY TWO WATER LINES, A 12-INCH HIGH PRESSURE AND A 10-INCH LOW PRESSURE LINE. THE 12-INCH HIGH PRESSURE LINE SERVICES THE FOAM ROOM AND SPRINKLERS. THE 10-INCH LOW PRESSURE LINE LOOPS THE HANGAR AND SERVICES THE FIRE HYDRANTS AROUND THE HANGAR.

ADJACENT PROPERTY
HANGAR 111 IS LOCATED ON THE NAVAL AIR STATION OCEANA, IN VIRGINIA BEACH, VIRGINIA. TO THE NORTHEAST OF THE HANGAR IS A PARKING APRON AND RUNWAY 32/14,
TO THE SOUTHEAST IS AN EXISTING HANGAR, TO THE SOUTHWEST IS 1ST STREET AND TO THE NORTHWEST IS A PARKING APRON AND RUNWAY 23/05.

OFF-SITE AREAS
THERE ARE NO OFF-SITE AREAS ASSOCIATED WITH THIS PROJECT.

SOILS
A GEOTECHNICAL EXPLORATION WAS CONDUCTED BY TEST AMERICA ON SEPTEMBER 12, 2015. THREE BORINGS SAMPLES WERE TAKEN AND ANALYZED. SEE SHEET BB101 FOR BORING LOCATIONS AND LOGS.

CRITICAL AREAS
THERE ARE NO CRITICAL AREAS IN THIS SITE.

EROSION AND SEDIMENT CONTROL MEASURES
UNLESS OTHERWISE INDICATED, CONSTRUCT AND MAINTAIN ALL VEGETATIVE AND STRUCTURAL EROSION AND SEDIMENT CONTROL MEASURES ACCORDING TO THE MINIMUM STANDARDS AND SPECIFICATIONS OF THE VIRGINIA EROSION AND SEDIMENT CONTROL HANDBOOK.

STRUCTURAL MEASURES
PROVIDE SILT FENCE (3.05) AS SHOWN ON THE PLANS TO FILTER RUNOFF FROM DISTURBED AREAS BEFORE IT LEAVES THE SITE.

PROVIDE STORM DRAIN INLET PROTECTION (3.07) ON ALL EXISTING DRAINAGE INLETS TO PREVENT SEDIMENT FROM ENTERING, ACCUMULATING IN AND BEING TRANSFERRED BY A CULVERT OR STORM SEWER SYSTEM.

PROVIDE TEMPORARY SEEDING (3.31) AND/OR PERMANENT SEEDING (3.32) ON ALL CRITICAL SLOPES (3:1 OR GREATER) AND AS NEEDED TO STABILIZE DISTURBED AREAS.

VEGETATIVE MEASURES
APPLY PERMANENT OR TEMPORARY SOIL STABILIZATION TO DENUDED AREAS WITHIN SEVEN (7) DAYS AFTER FINAL GRADE IS REACHED ON ANY PORTION OF THE SITE. APPLY TEMPORARY SOIL STABILIZATION WITHIN SEVEN (7) DAYS TO DENUDED AREAS THAT MAY NOT BE AT FINAL GRADE BUT WILL REMAIN DORMANT FOR LONGER THAN FOURTEEN (14) DAYS. APPLY PERMANENT SOIL STABILIZATION TO ALL AREAS THAT ARE TO BE LEFT DORMANT FOR MORE THAN SIX (6) MONTHS.

SURROUND TOPSOIL THAT HAS BEEN STOCKPILED WITH SILT FENCE AND PROTECT BY MULCH AND/OR TEMPORARY VEGETATION IMMEDIATELY AFTER GRADING.

MANAGEMENT STRATEGIES
SEQUENCE CONSTRUCTION SUCH THAT GRADING OPERATIONS WILL BEGIN AND END AS QUICKLY AS POSSIBLE.

PROVIDE AND MAINTAIN ALL EROSION AND SEDIMENT CONTROL MEASURES. MAINTENANCE OF THESE MEASURES THROUGHOUT THE PROJECT ARE CRITICAL TO THE EFFECTIVENESS OF THE PROGRAM.

AFTER AREAS ABOVE CONTROLS HAVE BEEN STABILIZED, CLEAN UP AND REMOVE THE CONTROLS.

PROTECT ALL STORM SEWER INLETS THAT ARE MADE OPERABLE DURING CONSTRUCTION SO THAT SEDIMENT-LADEN WATER CANNOT ENTER THE CONVEYANCE SYSTEM WITHOUT FIRST BEING FILTERED OR OTHERWISE TREATED TO REMOVE SEDIMENT.

PROVIDE UNDERGROUND UTILITY LINES IN ACCORDANCE WITH THE FOLLOWING STANDARDS IN ADDITION TO OTHER APPLICABLE CRITERIA:

A. NO MORE THAN 500 LINEAR FEET OF TRENCH MAY BE OPENED AT ONE TIME.
B. PLACE EXCAVATED MATERIAL ON THE UPHILL SIDE OF TRENCHES.
C. FILTER OR PASS EFFLUENT FROM DEWATERING OPERATIONS THROUGH AN APPROVED SEDIMENT TRAPPING DEVICE, OR BOTH AND DISCHARGED IN A MANNER THAT DOES NOT ADVERSELY AFFECT FLOWING STREAMS OR OFF-SITE PROPERTY.
D. COMPACT MATERIAL USED FOR BACKFILLING TRENCHES IN ORDER TO MINIMIZE EROSION AND PROMOTE STABILIZATION.
E. PROVIDE RESTABILIZATION IN ACCORDANCE WITH THESE REGULATIONS.
F. COMPLY WITH APPLICABLE SAFETY REGULATIONS.

VEGETATIVE MEASURES CONT.
APPLY PERMANENT OR TEMPORARY SOIL STABILIZATION WHERE CONSTRUCTION VEHICLE ACCESS ROUTES INTERSECT PAVED OR PUBLIC ROADS, PROVIDE PROVISIONS TO MINIMIZE THE TRANSPORT OF SEDIMENT BY VEHICULAR TRACKING ONTO THE PAVED SURFACE. WHERE SEDIMENT IS TRANSPORTED ONTO A PAVED OR PUBLIC ROAD SURFACE, CLEAN THE ROAD SURFACE THOROUGHLY AT THE END OF EACH DAY. REMOVE SEDIMENT FROM THE ROADS BY SHOVELING OR SWEEPING AND TRANSPORTED TO A SEDIMENT CONTROL DISPOSAL AREA. STREET WASHING ALLOWED ONLY AFTER SEDIMENT IS REMOVED IN THIS MANNER.

REMOVE ALL TEMPORARY EROSION AND SEDIMENT CONTROL MEASURES WITHIN 30 DAYS AFTER FINAL SITE STABILIZATION OR AFTER THE TEMPORARY MEASURES ARE NO LONGER NEEDED, UNLESS OTHERWISE AUTHORIZED BY THE LOCAL PROGRAM AUTHORITY. PERMANENTLY STABILIZE TRAPPED SEDIMENT AND THE DISTURBED SOILS AREAS RESULTING FROM THE DISPOSITION OF TEMPORARY MEASURES TO PREVENT FURTHER EROSION AND SEDIMENTATION.

DEVICES LISTED ABOVE ARE CONSIDERED MINIMUM EROSION AND SEDIMENT CONTROLS. ADDITIONAL CONTROL MEASURES MAY BE NECESSARY DUE TO CONTRACTOR PHASING OR OTHER UNFORESEEN CONDITIONS. IT IS THE CONTRACTOR'S RESPONSIBILITY TO PROVIDE ADDITIONAL MEASURES TO THOSE SHOWN, AS NEEDED, IN ORDER TO CONTROL EROSION AND CONTAIN SEDIMENT ON SITE. PROVIDE ALL MEASURES ACCORDING TO THE STANDARDS AND SPECIFICATIONS IN THE VIRGINIA EROSION AND SEDIMENT CONTROL HANDBOOK.

MAINTENANCE
INSPECT ALL CONTROL MEASURES DAILY BY THE SITE SUPERINTENDENT OR HIS REPRESENTATIVE AND WITHIN 24 HOURS AFTER ANY STORM EVENT GREATER THAN 0.5 INCHES OF RAIN PER 24 HOUR PERIOD. REPAIR ANY DAMAGED STRUCTURAL MEASURES BY THE END OF THE DAY. CHECK SEEDED AREAS REGULARLY TO ENSURE THAT A GOOD STAND OF GRASS IS MAINTAINED. FERTILIZE AND RESEED ALL AREAS AS NEEDED UNTIL GRASS IS ESTABLISHED.

THE CONTRACTOR IS RESPONSIBLE FOR KEEPING EXISTING PUBLIC ROADS IN A CLEAN, DUST AND MUD FREE, CONDITION AT ALL TIMES.

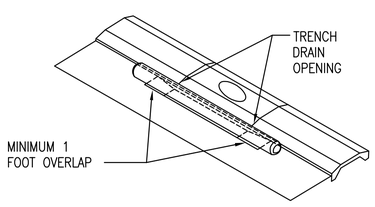

USE VIRGINIA EROSION AND SEDIMENT CONTROL APPROVED INLET PROTECTION.

A1 TRENCH DRAIN PROTECTION (IP)
NOT TO SCALE — CD101

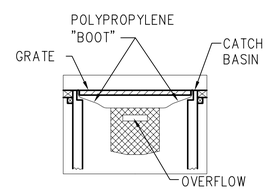

TEMPORARY INLET SEDIMENT FILTER

NOTE:
PROVIDE TEMPORARY INLET SEDIMENT FILTER ON ALL PAVED CATCH BASINS OR STORM INLETS. USE VIRGINIA EROSION AND SEDIMENT CONTROL APPROVED INLET PROTECTION.

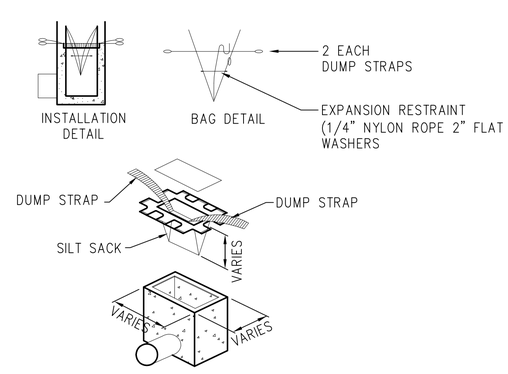

A2 SILT SACK DROP INLET PROTECTION (IP)
NOT TO SCALE — CD101, CD102

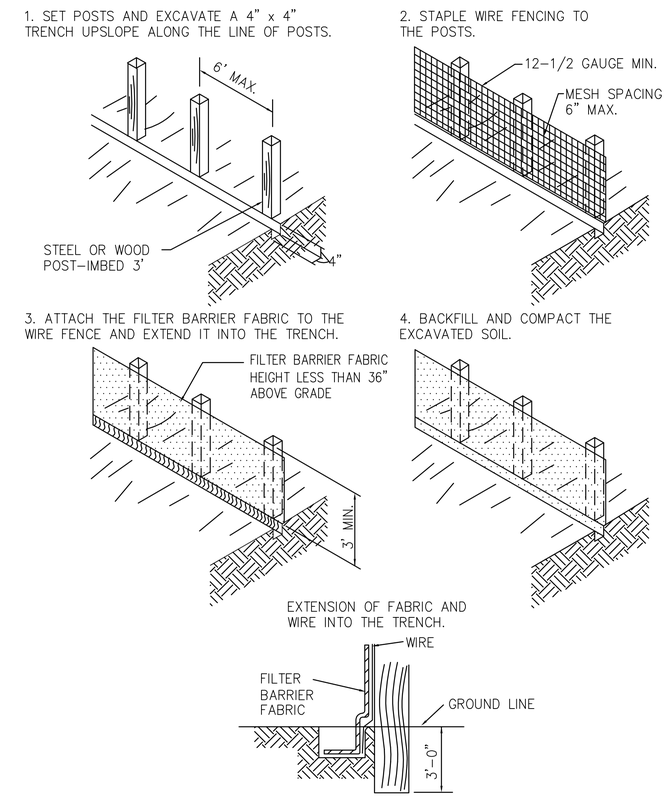

A4 TEMPORARY SEDIMENT FENCE (SF)
NOT TO SCALE — CD101, CD102

SYM	DESCRIPTION	DATE	APPR
1	REVISED PIPE DEPTH	6/1/2016	
1	FINAL SUBMISSION	5/2/2016	

NAVFAC

COMMONWEALTH OF VIRGINIA
BRIAN SCOTT CHEWNING
Lic. No. 038283
6/1/16
PROFESSIONAL ENGINEER
SEAL

the PROTECTION ENGINEERING GROUP
14585 Avion Parkway, Suite 150 703-488-9950
Chantilly, Virginia 20151 fax: 703-488-9994
www.PEGroup-Inc.com

PENNONI ASSOCIATES INC.
349 Southport Circle, Suite 100
Virginia Beach, Virginia 23452
T 757.497.7472 F 757.497.0250
A/E INFO

APPROVED
FOR COMMANDER NAVFAC
ACTIVITY
SATISFACTORY TO
DES AT | DRW RSP | CHK BSC
PM/DM KPL/IAS
BRANCH MANAGER
CHIEF ENG/ARCH Mark J. Airaghi, PE
FIRE PROTECTION

DEPARTMENT OF THE NAVY
NAVAL FACILITIES ENGINEERING COMMAND
HAMPTON ROADS IPT
NAVAL FACILITIES ENGINEERING COMMAND ~ MID-ATLANTIC
NAS OCEANA ~ VIRGINIA BEACH, VIRGINIA
NAVAL AIR STATION OCEANA
VIRGINIA BEACH, VIRGINIA
HANGAR 111 FIRE PROTECTION AND STRUCTURAL REPAIRS
DETAILS - CIVIL

SCALE: NO SCALE
EPROJECT NO.: 1372146
CONSTR. CONTR. NO.
NAVFAC DRAWING NO. 12716249
SHEET 27 OF 170
C-504

DRAWFORM REVISION: 10 MAY 2014

FILE NAME: N:\PROJECTS\GH00\1501-Hangar 111\DESIGN_PUBLISH\1372146_C-504.dwg LAYOUT NAME: C-504 PLOTTED: Tuesday, May 31, 2016 - 12:30pm USER: RPontil