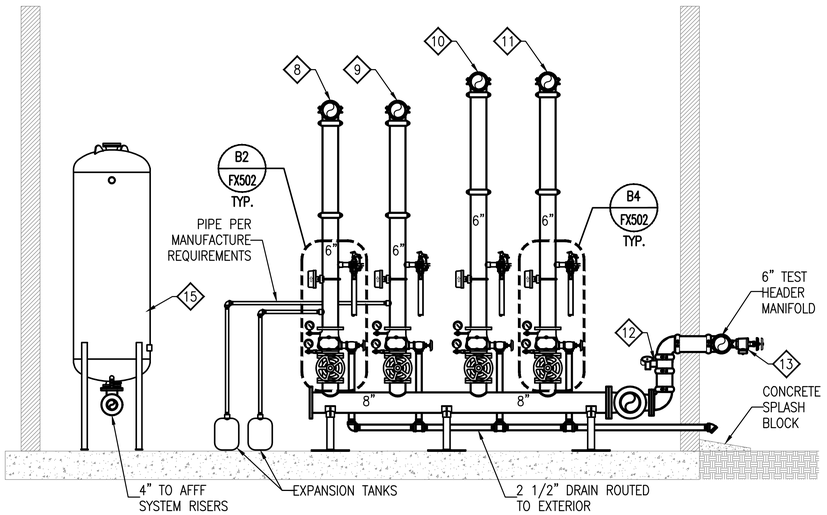

C1 ELEVATION VIEW - WET PIPE RISERS

SCALE: 3/8" = 1'-0"

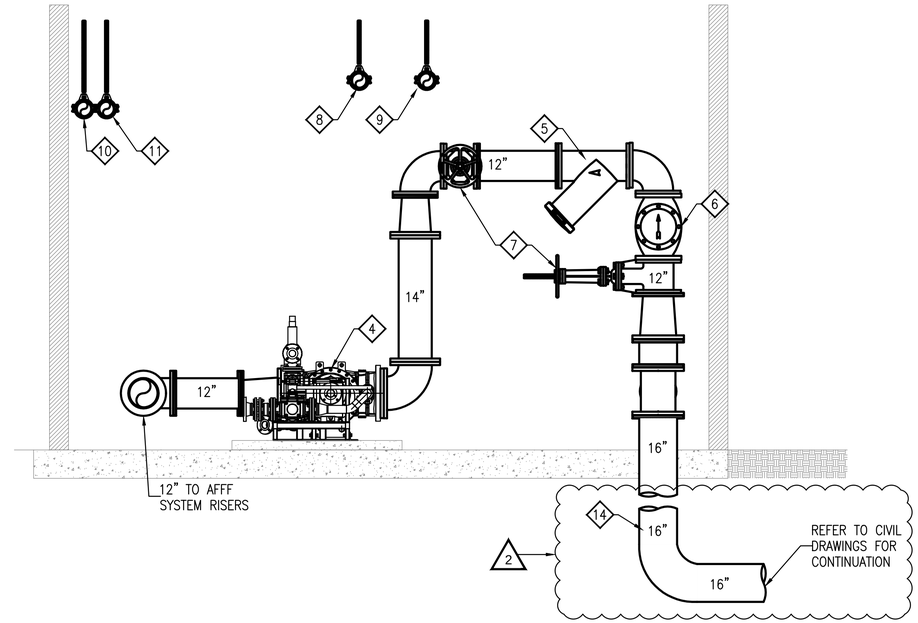

C3 ELEVATION VIEW - INCOMING CONNECTION TO FIREDOS

SCALE: 3/8" = 1'-0"

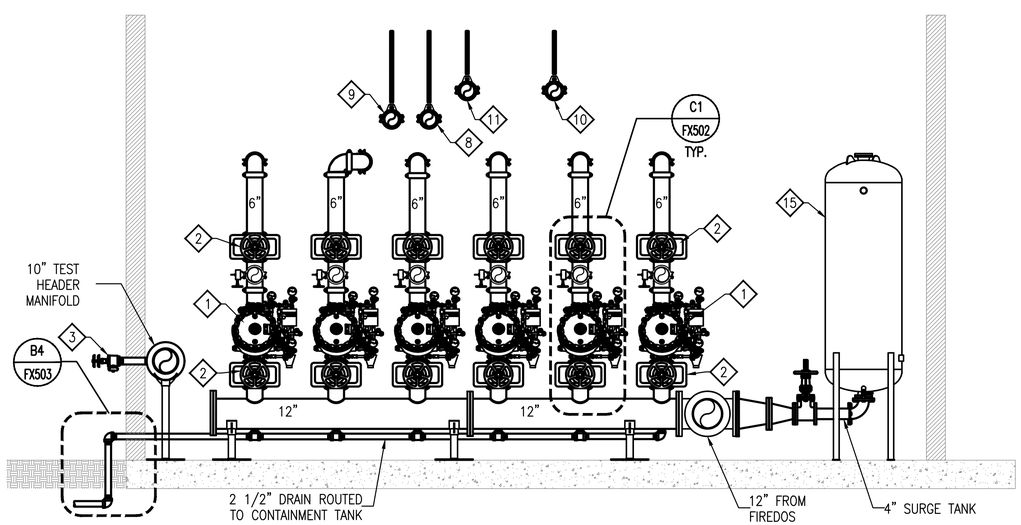

A1 ELEVATION VIEW - AFFF SYSTEM RISERS

SCALE: 3/8" = 1'-0"

SHEET NOTES

1. PROVIDE PIPES ENTERING MECHANICAL ROOM FROM HANGAR BAY AREA. PROTECT PENETRATIONS UTILIZING A LISTED THROUGH PENETRATION FIRESTOP SYSTEM TO AFFORD A MINIMUM 1 HOUR FIRE RESISTANCE RATING.
2. THIS DRAWING IS INTENDED FOR USE AS A SCHEMATIC PIPING PLAN TO ILLUSTRATE CORRECT PLACEMENT, AND RELATIVE POSITION OF EQUIPMENT. ACTUAL ON SITE PIPING MAY VARY AFTER COORDINATION WITH ARCHITECTURAL, STRUCTURAL, AND MECHANICAL FEATURES.

KEY NOTES

1. PROVIDE 6" FLOW CONTROL VALVE WITH PRESSURE REGULATING CONTROL TRIM. PROVIDE VALVE SET FROM THE FACTORY TO SYSTEM DEMAND PRESSURE REQUIREMENTS. TYPICAL FOR SIX.
2. PROVIDE 6" OS&Y SUCTION CONTROL VALVE(NORMALLY OPEN), 6" DISCHARGE CONTROL VALVE (NORMALLY OPEN), AND 6" TEST HEADER CONTROL VALVE (NORMALLY CLOSED). TYPICAL FOR SIX.
3. PROVIDE AFFF TEST HEADER WITH (12) 2½" HOSE CONNECTIONS. PITCH PIPING TO OUTSIDE OF BUILDING.
4. PROVIDE WATER OPERATED MECHANICAL PROPORTIONING PUMP, SUCH AS FIREDOS OR APPROVED EQUAL.
5. PROVIDE 12" STRAINER.
6. PROVIDE 12" CHECK VALVE.
7. PROVIDE 12" OS&Y ISOLATION VALVE W/ TAMPER (NORMALLY OPEN).
8. PROVIDE 6" RISER FOR HANGAR BAY CEILING ZONE 1.
9. PROVIDE 6" RISER FOR HANGAR BAY CEILING ZONE 2.
10. PROVIDE 6" RISER FOR OFFICE SPACE 1ST FLOOR.
11. PROVIDE 6" RISER FOR OFFICE SPACE 2ND FLOOR.
12. PROVIDE 6" BUTTERFLY VALVE FOR SPRINKLER TEST HEADER. PROVIDE BALL DRIP ON HEADER SIDE OF VALVE. (NORMALLY CLOSED)
13. PROVIDE SPRINKLER TEST HEADER WITH (6) 2½" HOSE CONNECTIONS. PITCH PIPING BACK INTO THE BUILDING.
14. PROVIDE 16" STAINLESS STEEL INCOMING MAIN. PROVIDE REQUIRED THRUST BLOCKING AND RESTRAINING RODS. WELD ALL JOINTS BELOW BUILDING STRUCTURE/FLOOR.
15. PROVIDE MINIMUM 500 GALLON SURGE TANK CONNECTED DOWN STREAM OF PROPORTIONING PUMP BUT UPSTREAM OF FLOW CONTROL VALVES.

CAUTION: IF THIS PLAN IS A REDUCTION, GRAPHIC SCALE MUST BE USED

0 1' 2' 4' 6'

⅜" = 1'-0

KEY PLAN

A	B	C
D		F

SYM	DESCRIPTION	DATE	APPR
1	REVISED INCOMING MAIN	6/1/2016	
	FINAL SUBMISSION	5/2/2016	

NAVFAC

COMMONWEALTH OF VIRGINIA
MATTHEW J. BATBOUTA
Lic. No. 049594
PROFESSIONAL ENGINEER
6-1-16
SEAL

the PROTECTION ENGINEERING GROUP
14585 Avion Parkway, Suite 150 703-488-9990
Chantilly, Virginia 20151 fax: 703-488-9994
www.PEGroup-Inc.com

A/E INFO

APPROVED

FOR COMMANDER NAVFAC

ACTIVITY

SATISFACTORY TO

DES	MCP	DRW	LDB	CHK	MJB

PM/DM KPL/IAS

BRANCH MANAGER

CHIEF ENG/ARCH Mark J. Airaghi, PE

FIRE PROTECTION

DEPARTMENT OF THE NAVY
NAVAL FACILITIES ENGINEERING COMMAND
NAVAL FACILITIES ENGINEERING COMMAND ~ MID-ATLANTIC
NAS OCEANA ~ VIRGINIA BEACH, VIRGINIA
HAMPTON ROADS IPT
NAVAL AIR STATION OCEANA
VIRGINIA BEACH, VIRGINIA

HANGAR 111 FIRE PROTECTION AND STRUCTURAL REPAIRS

ENLARGED PLAN - FOAM ROOM PLAN NEW WORK

SCALE: AS SHOWN

EPROJECT NO.: 1372146

CONSTR. CONTR. NO.

NAVFAC DRAWING NO. 12716353

SHEET 131 OF 170

FX403

DRAWFORM REVISION: 10 MAY 2014

FILE NAME: G:\86\18793\02 BIM-CADD\2.1 Cadd Files\1372146_FX403.dwg LAYOUT NAME: Area A PLOTTED: Wednesday, June 01, 2016 - 9:17am USER: idberry

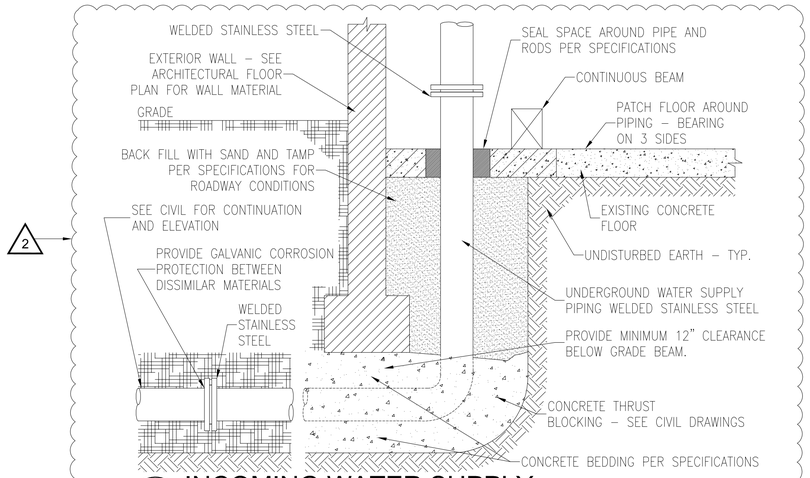

C1 INCOMING WATER SUPPLY

SCALE: NOT TO SCALE FX503

ALL SIZES IN INCHES	NOMINAL PIPE SIZE									
	1"	1¼"	1½"	2"	2½"	3"	4"	5"	6"	8"
ROD DIAMETER	⅜"	⅜"	⅜"	⅜"	⅜"	⅜"	⅜"	½"	½"	½"
SIZE OF SET SCREW	⅜"	⅜"	⅜"	⅜"	½"	½"	½"	½"	½"	⅝"

ALL SIZES ARE IN INCHES

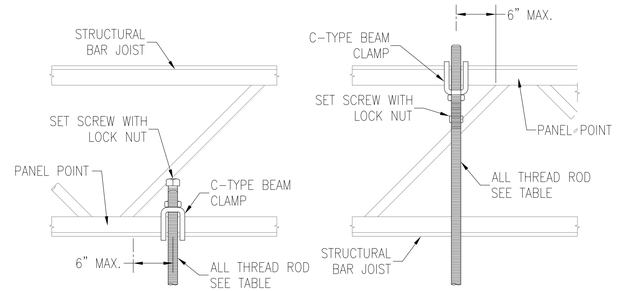

IF HANGER IS IN EXCESS OF 6 INCHES FROM PANEL POINT, ADD ADDITIONAL BRACING TO BAR JOIST. SEE STRUCTURAL DETAILS FOR BAR JOIST BRACING.

C2 INSTALLATION OF BEAM CLAMP

SCALE: NOT TO SCALE FX503

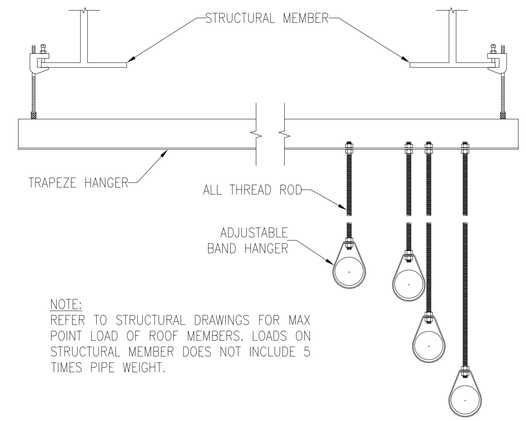

NOTE:
REFER TO STRUCTURAL DRAWINGS FOR MAX POINT LOAD OF ROOF MEMBERS. LOADS ON STRUCTURAL MEMBER DOES NOT INCLUDE 5 TIMES PIPE WEIGHT.

C4 TRAPEZE HANGER

SCALE: NOT TO SCALE FX503

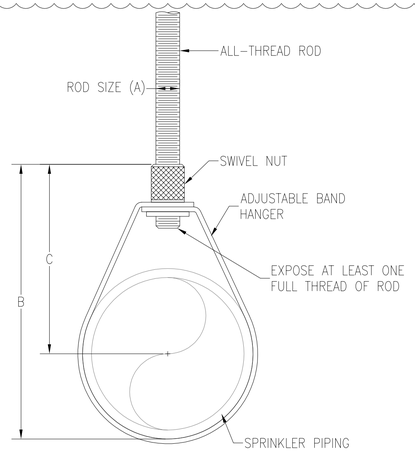

PIPE SIZE	A	B	C
½	⅜	3⅛	2⅝
¾	⅜	3⅛	2½
1	⅜	3⅜	2⅝
1¼	⅜	3¾	2⅞
1½	⅜	3⅞	2⅞
2	⅜	4½	3
2½	⅜	5⅝	4⅛
3	⅜	5⅞	4
4	⅜	7⅜	5
5	½	9⅛	6¼
6	½	10⅛	6¾
8	½	13⅛	8¾

ALL SIZES ARE IN INCHES

B1 ADJUSTABLE BAND HANGER

SCALE: NOT TO SCALE FX503

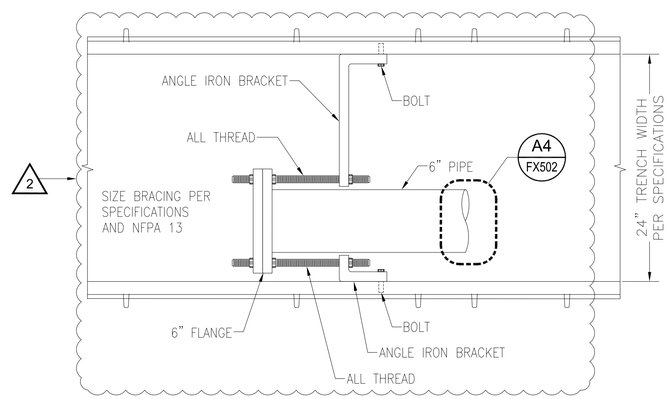

*REFER TO STRUCTURAL DETAILS FOR TRENCH SIZE.

B2 TRENCH PIPING SURGE BRACING

SCALE: NOT TO SCALE FX503

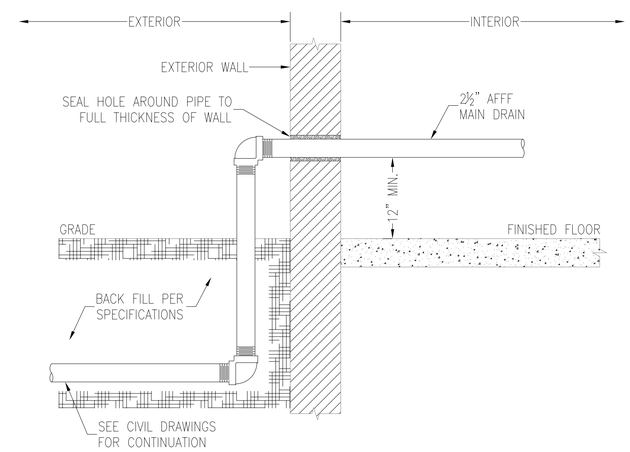

B4 AFFF MAIN DRAIN

SCALE: NOT TO SCALE FX503

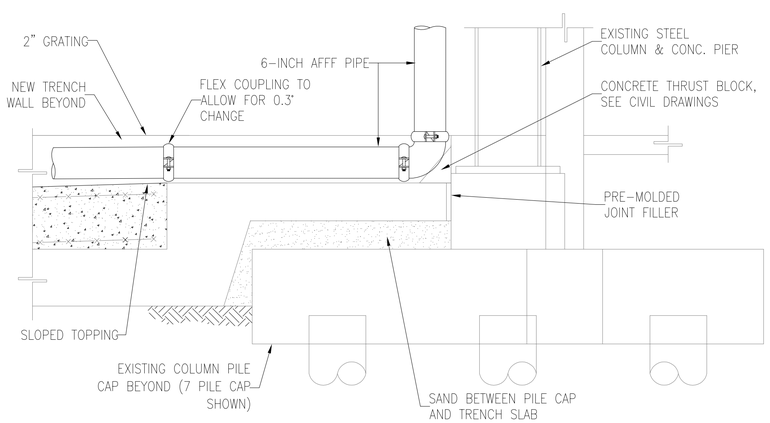

A1 PIPING INTO TRENCH

SCALE: NOT TO SCALE FX503

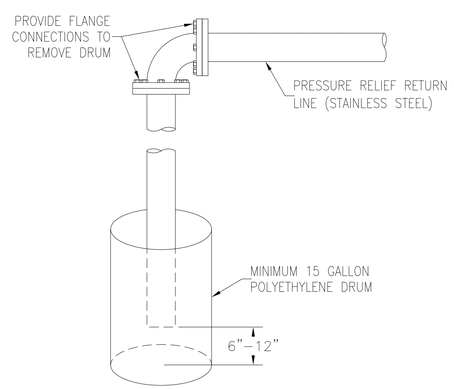

A2 PRESSURE RELIEF RETURN LINE

SCALE: NOT TO SCALE FX503

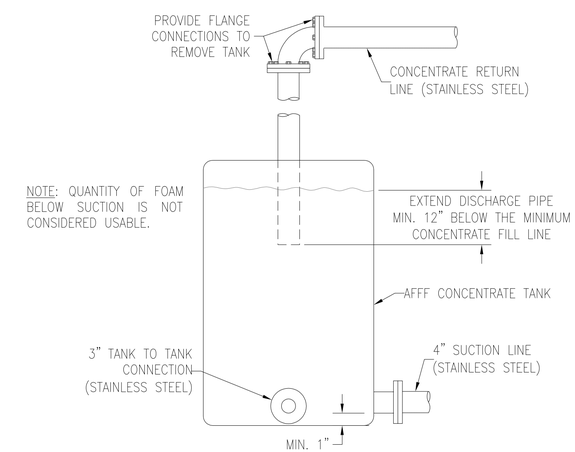

A4 AFFF CONCENTRATE TANK

SCALE: NOT TO SCALE FX503

SYM	DESCRIPTION	DATE	APPR
1	REVISED DETAIL C1 & B2	6/1/2016	
	FINAL SUBMISSION	5/2/2016	

NAVFAC

COMMONWEALTH OF VIRGINIA
MATTHEW J. BATBOUTA
Lic. No. 049594
PROFESSIONAL ENGINEER
6-1-16
SEAL

the PROTECTION ENGINEERING GROUP
14585 Avion Parkway, Suite 150 703-488-9990
Chantilly, Virginia 20151 fax: 703-488-9994
www.PEGroupInc.com

A/E INFO

APPROVED

FOR COMMANDER NAVFAC

ACTIVITY

SATISFACTORY TO

IDES	MCP	DRW	LDB	CHK	MJB

PM/DM KPL/IAS

BRANCH MANAGER

CHIEF ENG/ARCH Mark J. Airaghi, PE

FIRE PROTECTION

DEPARTMENT OF THE NAVY
NAVAL FACILITIES ENGINEERING COMMAND
HAMPTON ROADS PIT
NAVAL FACILITIES ENGINEERING COMMAND ~ MID-ATLANTIC
NAS OCEANA – VIRGINIA BEACH, VIRGINIA
NAVAL AIR STATION OCEANA
VIRGINIA BEACH, VIRGINIA

HANGAR 111 FIRE PROTECTION AND STRUCTURAL REPAIRS

DETAILS - FIRE SUPPRESSION

SCALE: AS SHOWN
EPROJECT NO.: 1372146
CONSTR. CONTR. NO.
NAVFAC DRAWING NO. 12716356
SHEET 134 OF 170

FX503

DRAWFORM REVISION: 10 MAY 2014

FILE NAME: N:\US\Chantilly\Projects\861\18793\02 BIM-CADD\2.1 Cadd Files\1372146_FX503.dwg LAYOUT NAME: PLOTTED: Thursday, June 02, 2016 – 4:33pm USER: mcpolley