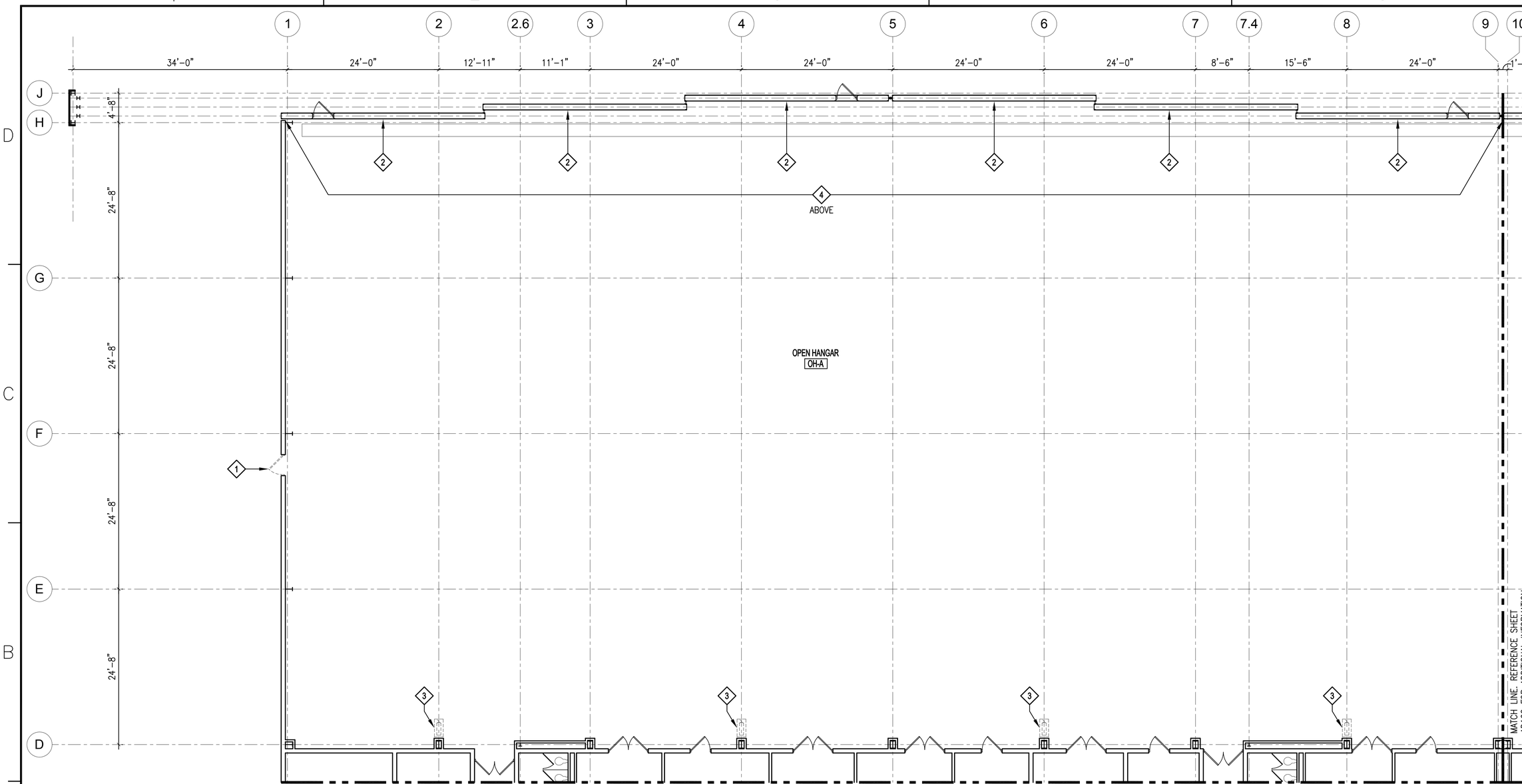

1 FIRST FLOOR DEMOLITION PLAN - AREA A

SCALE: 1/8" = 1'-0"

PROJECT NORTH

KEY NOTES

1. EXISTING EXTERIOR PERSONNEL DOORS: EXISTING DOORS AND FRAMES TO REMAIN.
BID OPTION: REMOVE EXISTING DOOR, DOOR FRAME AND DOOR HARDWARE COMPLETE. CLEAN, PATCH AND PREPARE EXISTING OPENING TO RECEIVE DOOR AND FRAME ASSEMBLY. REFERENCE ARCHITECTURAL FLOOR PLANS AND DOOR SCHEDULE FOR ADDITIONAL INFORMATION. REFERENCE ENVIRONMENT DOCUMENTS FOR ADDITIONAL INFORMATION AND DOOR / DOOR FRAME RECYCLING PROCEDURES.

2. EXISTING HANGAR DOOR MUST REMAIN IN PLACE WHILE WORK OCCURS. REMOVE EXISTING INTERIOR AND EXTERIOR METAL PANEL, FASTENERS AND ASSOCIATED METAL FLASHING COMPLETE TO EXPOSE THE EXISTING STEEL DOOR FRAME STRUCTURE. REMOVE EXISTING HANGAR DOOR INSULATION COMPLETE. REMOVE EXISTING HANGAR DOOR MOTOR AND CONTROLS COMPLETE. REFERENCE ELECTRICAL DRAWINGS FOR ADDITIONAL INFORMATION. EXISTING PERSONNEL DOOR MUST REMAIN IN PLACE AND UNDAMAGED FOR THE DURATION OF CONSTRUCTION. INSPECT EXISTING STEEL HANGAR DOOR FRAME STRUCTURE FOR DAMAGE, DETERIORATION AND CORROSION. DAMAGE MUST BE BROUGHT TO THE ATTENTION OF THE CONTRACTING OFFICER. REFERENCE STRUCTURAL GENERAL NOTES ON DRAWING S-003 FOR ADDITIONAL INFORMATION.

3. REMOVE EXISTING FIRE EXTINGUISHER AND MOUNTING SYSTEM. SALVAGE AND STORE FOR REINSTALLATION. PATCH AND REPAIR MASONRY WALLS. REFERENCE DRAWINGS A111 THRU A116 FOR FIRE EXTINGUISHER LOCATIONS.

4. EXISTING BATT INSULATION ABOVE HANGAR DOORS: EXISTING BATT INSULATION TO REMAIN.
BID OPTION: REMOVE EXISTING BATT INSULATION COMPLETE (AREA OF WORK EXTENDS FROM COLUMN LINE 'H' TO EXTERIOR WALL BEYOND COLUMN LINE 'J' ALONG COLUMN '1' TO COLUMN LINE '27'). STEEL CLOSURE PLATE AND STEEL FRAMING TO REMAIN. CLEAN, PATCH AND REPAIR EXISTING STEEL TO PREPARE FOR INSULATED METAL LINER PANEL. REFERENCE ENVIRONMENT DOCUMENTS FOR ADDITIONAL INFORMATION AND ABATEMENT PROCEDURES FOR BIRD DROPPINGS.

CAUTION: IF THIS PLAN IS A REDUCTION, GRAPHIC SCALE MUST BE USED

0 4' 8' 12' 16'
⅛" = 1'-0

KEY PLAN

A	B	C
D	E	F

SYM	DESCRIPTION	DATE	APPR
1	FINAL SUBMISSION	5/2/2016	

NAVFAC

COMMONWEALTH OF VIRGINIA
DARRYL R. TREVILLIAN
Lic. No. 7644
5-2-16
SEAL

the PROTECTION ENGINEERING GROUP
14585 Avion Parkway, Suite 150 703-488-9900
Chantilly, Virginia 20151 fax: 703-488-9994
www.PEGroup-Inc.com

Baskervill
101 S 18th St
Ste 300 - 23219
Richmond, Va
804 343 1010
baskervill.com
A/E INFO

APPROVED 5/10/16
FOR COMMANDER NAVFAC
ACTIVITY
SATISFACTORY TO
DES JWT DRW DN CHK DRT
PM/DM KPL/IAS
BRANCH MANAGER RLJ
CHIEF ENG/ARCH Mark J. Airaghi, PE
FIRE PROTECTION DPS

DEPARTMENT OF THE NAVY
NAVAL FACILITIES ENGINEERING COMMAND
HAMPTON ROADS DIV
NAVAL FACILITIES ENGINEERING COMMAND ~ MID-ATLANTIC
NAS OCEANA ~ VIRGINIA BEACH, VIRGINIA
NAVAL AIR STATION OCEANA
VIRGINIA BEACH, VIRGINIA
HANGAR 111 FIRE PROTECTION AND STRUCTURAL REPAIRS
1st FLOOR DEMOLITION PLAN - ARCH - AREA A

SCALE: AS SHOWN
EPROJECT NO.: 1372146
CONSTR. CONTR. NO.
NAVFAC DRAWING NO. 12716269
SHEET 47 OF 170
AD101

DRAWFORM REVISION: 10 MAY 2014

FILE NAME: J:\GHD\2-1500339.0 - Oceana Naval Air Station-R111 Hanger Mod\E_Drawings\Arch\1372146_AD101 Demo Plan.dwg LAYOUT NAME: Plot Final PLOTTED: Wednesday, April 20, 2016 - 3:14pm USER: dtj2

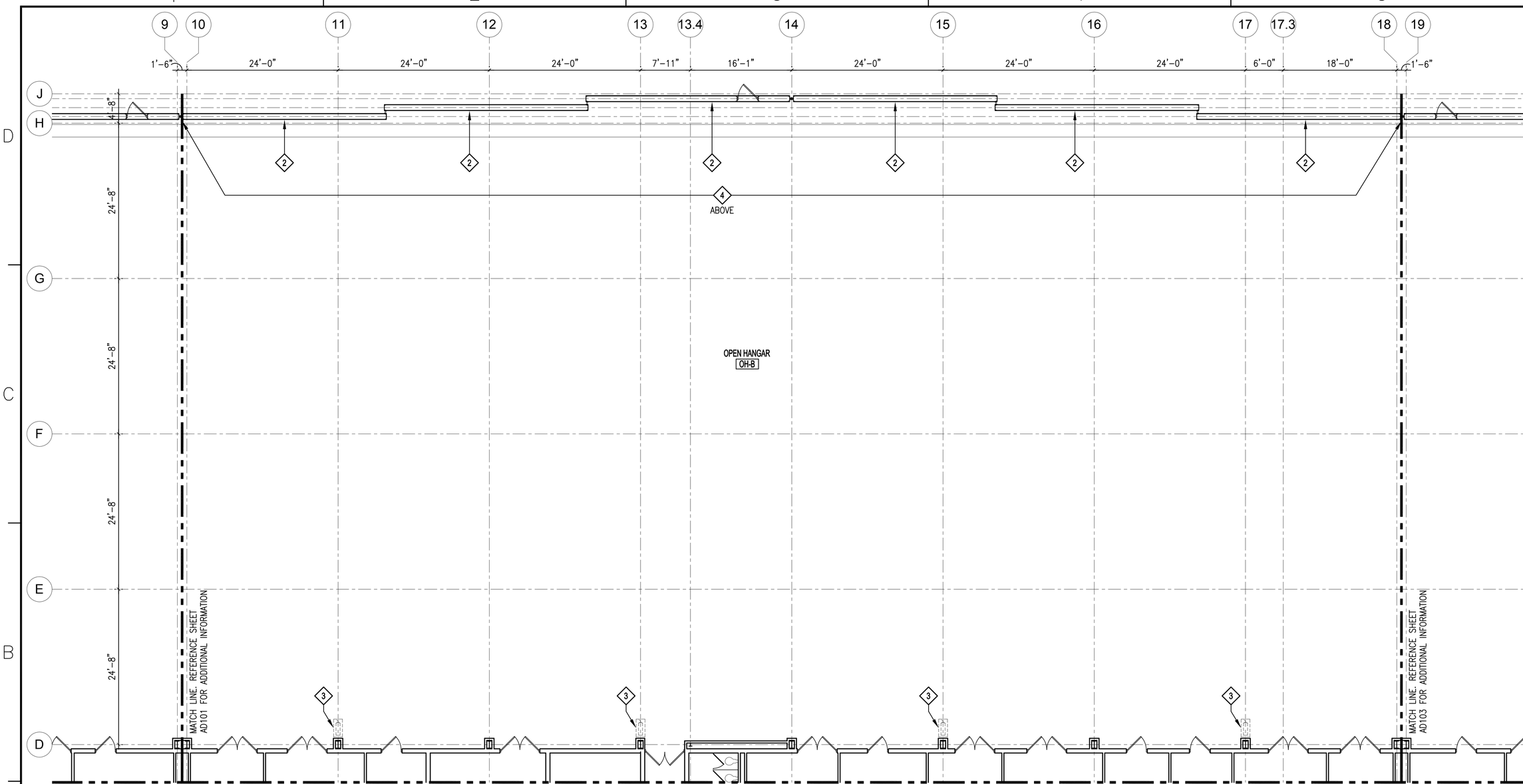

1 FIRST FLOOR DEMOLITION PLAN - AREA B

SCALE: 1/8" = 1'-0"

PROJECT NORTH

KEY NOTES

1. NOT USED.

2. EXISTING HANGAR DOOR MUST REMAIN IN PLACE WHILE WORK OCCURS. REMOVE EXISTING INTERIOR AND EXTERIOR METAL PANEL, FASTENERS AND ASSOCIATED METAL FLASHING COMPLETE TO EXPOSE THE EXISTING STEEL DOOR FRAME STRUCTURE. REMOVE EXISTING HANGAR DOOR INSULATION COMPLETE. REMOVE EXISTING HANGAR DOOR MOTOR AND CONTROLS COMPLETE. REFERENCE ELECTRICAL DRAWINGS FOR ADDITIONAL INFORMATION. EXISTING PERSONNEL DOOR MUST REMAIN IN PLACE AND UNDAMAGED FOR THE DURATION OF CONSTRUCTION. INSPECT EXISTING STEEL HANGAR DOOR FRAME STRUCTURE FOR DAMAGE, DETERIORATION AND CORROSION. DAMAGE MUST BE BROUGHT TO THE ATTENTION OF THE CONTRACTING OFFICER. REFERENCE STRUCTURAL GENERAL NOTES ON DRAWING S-003 FOR ADDITIONAL INFORMATION.

3. REMOVE EXISTING FIRE EXTINGUISHER AND MOUNTING SYSTEM. SALVAGE AND STORE FOR REINSTALLATION. PATCH AND REPAIR MASONRY WALLS. REFERENCE DRAWINGS A111 THRU A116 FOR FIRE EXTINGUISHER LOCATIONS.

4. EXISTING BATT INSULATION ABOVE HANGAR DOORS: EXISTING BATT INSULATION TO REMAIN.
BID OPTION: REMOVE EXISTING BATT INSULATION COMPLETE (AREA OF WORK EXTENDS FROM COLUMN LINE 'H' TO EXTERIOR WALL BEYOND COLUMN LINE 'J' ALONG COLUMN '1' TO COLUMN LINE '27'). STEEL CLOSURE PLATE AND STEEL FRAMING TO REMAIN. CLEAN, PATCH AND REPAIR EXISTING STEEL TO PREPARE FOR INSULATED METAL LINER PANEL. REFERENCE ENVIRONMENT DOCUMENTS FOR ADDITIONAL INFORMATION AND ABATEMENT PROCEDURES FOR BIRD DROPPINGS.

CAUTION: IF THIS PLAN IS A REDUCTION, GRAPHIC SCALE MUST BE USED

0 4' 8' 12' 16'

⅛" = 1'-0

KEY PLAN

A	B	C
D	E	F

SYM	DESCRIPTION	DATE	APPR
1	FINAL SUBMISSION	5/2/2016	

NAVFAC

COMMONWEALTH OF VIRGINIA
DARRYL R. TREVILLIAN
Lic. No. 7644
5-2-16
SEAL

the PROTECTION ENGINEERING GROUP
14585 Avion Parkway, Suite 150 703-488-9980
Chantilly, Virginia 20151 fax: 703-488-9994
www.PEGroup-Inc.com

Baskervill
101 S 18th St
Ste 300 • 23219
Richmond, Va
804 343 1010
baskervill.com
A/E INFO

APPROVED 5/10/16
FOR COMMANDER NAVFAC
ACTIVITY
SATISFACTORY TO
DES JWT DRW DN CHK DRT
PM/OM KPL/IAS
BRANCH MANAGER
CHIEF ENG/ARCH Mark J. Airaghi, PE
FIRE PROTECTION DPS

DEPARTMENT OF THE NAVY
NAVAL FACILITIES ENGINEERING COMMAND
NAVAL FACILITIES ENGINEERING COMMAND ~ MID-ATLANTIC
NAS OCEANA ~ VIRGINIA BEACH, VIRGINIA
HAMPTON ROADS PT
NAVAL AIR STATION OCEANA
VIRGINIA BEACH, VIRGINIA
HANGAR 111 FIRE PROTECTION AND STRUCTURAL REPAIRS
1st FLOOR DEMOLITION PLAN - ARCH - AREA B

SCALE: AS SHOWN
EPROJECT NO.: 1372146
CONSTR. CONTR. NO.
NAVFAC DRAWING NO. 12716270
SHEET 48 OF 170
AD102
DRAWFORM REVISION: 10 MAY 2014

FILE NAME: J:\PHD\2.150339.0 - Oceana Naval Air Station-R111 Hanger Mod\E_Drawings\Arch\1372146_AD102 Demo Plan.dwg LAYOUT NAME: Plot Final PLOTTED: Wednesday, April 20, 2016 - 3:14pm USER: dhj2

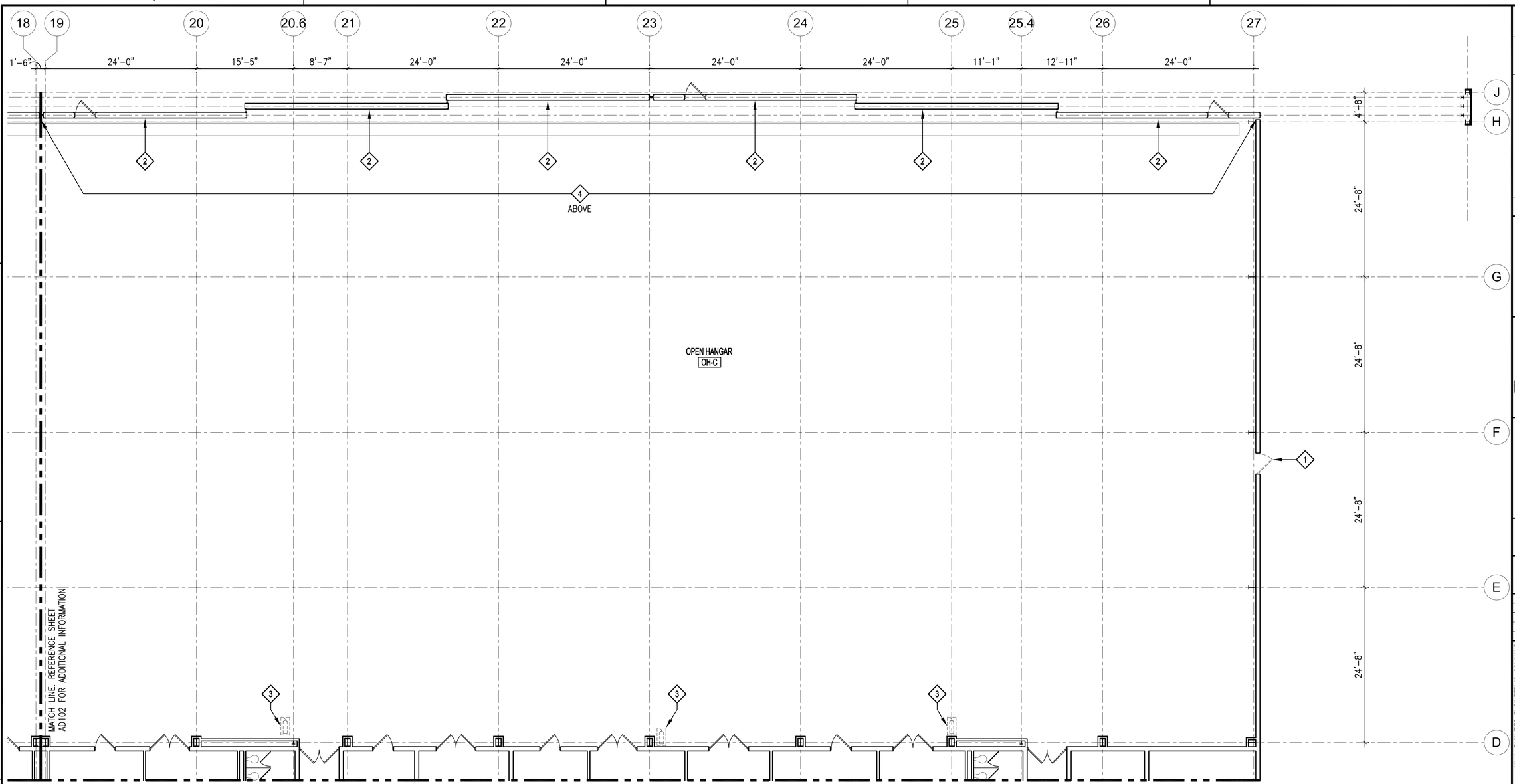

MATCH LINE. REFERENCE SHEET
AD106 FOR ADDITIONAL INFORMATION

1 FIRST FLOOR DEMOLITION PLAN - AREA C

SCALE: 1/8" = 1'-0"

PROJECT NORTH

KEY NOTES

1. EXISTING EXTERIOR PERSONNEL DOORS: EXISTING DOORS AND FRAMES TO REMAIN.
BID OPTION: REMOVE EXISTING DOOR, DOOR FRAME AND DOOR HARDWARE COMPLETE. CLEAN, PATCH AND PREPARE EXISTING OPENING TO RECEIVE DOOR AND FRAME ASSEMBLY. REFERENCE ARCHITECTURAL FLOOR PLANS AND DOOR SCHEDULE FOR ADDITIONAL INFORMATION. REFERENCE ENVIRONMENT DOCUMENTS FOR ADDITIONAL INFORMATION AND DOOR / DOOR FRAME RECYCLING PROCEDURES.

2. EXISTING HANGAR DOOR MUST REMAIN IN PLACE WHILE WORK OCCURS. REMOVE EXISTING INTERIOR AND EXTERIOR METAL PANEL, FASTENERS AND ASSOCIATED METAL FLASHING COMPLETE TO EXPOSE THE EXISTING STEEL DOOR FRAME STRUCTURE. REMOVE EXISTING HANGAR DOOR INSULATION COMPLETE. REMOVE EXISTING HANGAR DOOR MOTOR AND CONTROLS COMPLETE. REFERENCE ELECTRICAL DRAWINGS FOR ADDITIONAL INFORMATION. EXISTING PERSONNEL DOOR MUST REMAIN IN PLACE AND UNDAMAGED FOR THE DURATION OF CONSTRUCTION. INSPECT EXISTING STEEL HANGAR DOOR FRAME STRUCTURE FOR DAMAGE, DETERIORATION AND CORROSION. DAMAGE MUST BE BROUGHT TO THE ATTENTION OF THE CONTRACTING OFFICER. REFERENCE STRUCTURAL GENERAL NOTES ON DRAWING S-003 FOR ADDITIONAL INFORMATION.

3. REMOVE EXISTING FIRE EXTINGUISHER AND MOUNTING SYSTEM. SALVAGE AND STORE FOR REINSTALLATION. PATCH AND REPAIR MASONRY WALLS. REFERENCE DRAWINGS A111 THRU A116 FOR FIRE EXTINGUISHER LOCATIONS.

4. EXISTING BATT INSULATION ABOVE HANGAR DOORS: EXISTING BATT INSULATION TO REMAIN.
BID OPTION: REMOVE EXISTING BATT INSULATION COMPLETE (AREA OF WORK EXTENDS FROM COLUMN LINE 'H' TO EXTERIOR WALL BEYOND COLUMN LINE 'J' ALONG COLUMN '1' TO COLUMN LINE '27'). STEEL CLOSURE PLATE AND STEEL FRAMING TO REMAIN. CLEAN, PATCH AND REPAIR EXISTING STEEL TO PREPARE FOR INSULATED METAL LINER PANEL. REFERENCE ENVIRONMENT DOCUMENTS FOR ADDITIONAL INFORMATION AND ABATEMENT PROCEDURES FOR BIRD DROPPINGS.

CAUTION: IF THIS PLAN IS A REDUCTION, GRAPHIC SCALE MUST BE USED

0 4' 8' 12' 16'
⅛" = 1'-0

KEY PLAN

A	B	C
D	E	F

STM	DESCRIPTION	DATE	APPR
1	FINAL SUBMISSION	5/2/2016	

NAVFAC

COMMONWEALTH OF VIRGINIA
DARRYL R. TREVILLIAN
Lic. No. 7644
5-2-16
SEAL

the PROTECTION ENGINEERING GROUP
14585 Avion Parkway, Suite 150 703-488-9990
Chantilly, Virginia 20151 fax: 703-488-9994
www.PEGroup-Inc.com

Baskervill
101 S 18th St
Ste 300 - 23219
Richmond, Va
804 648 1910
baskervill.com
A/E INFO

APPROVED 5/10/16
FOR COMMANDER NAVFAC
ACTIVITY
SATISFACTORY TO
DES JWT DRW DN CHK DRT
PM/DM KPL/IAS
BRANCH MANAGER
CHIEF ENG/ARCH Mark J. Airaghi, PE
FIRE PROTECTION DPS

DEPARTMENT OF THE NAVY
NAVAL FACILITIES ENGINEERING COMMAND
HAMPTON ROADS DIV
NAVAL FACILITIES ENGINEERING COMMAND ~ MID-ATLANTIC
NAS OCEANA ~ VIRGINIA BEACH, VIRGINIA
NAVAL AIR STATION OCEANA
VIRGINIA BEACH, VIRGINIA

HANGAR 111 FIRE PROTECTION AND STRUCTURAL REPAIRS

1st FLOOR DEMOLITION PLAN - ARCH - AREA C

SCALE: AS SHOWN
EPROJECT NO.: 1372146
CONSTR. CONTR. NO.
NAVFAC DRAWING NO. 12716271
SHEET 49 OF 170

AD103

DRAWFORM REVISION: 10 MAY 2014

FILE NAME: J:\GHD\2-150339.0 - Oceana Naval Air Station-R111 Hanger Mod\E_Drawings\Arch\1372146_AD103 Demo Plan.dwg LAYOUT NAME: Plot Final PLOTTED: Wednesday, April 20, 2016 - 3:13pm USER: dtj2

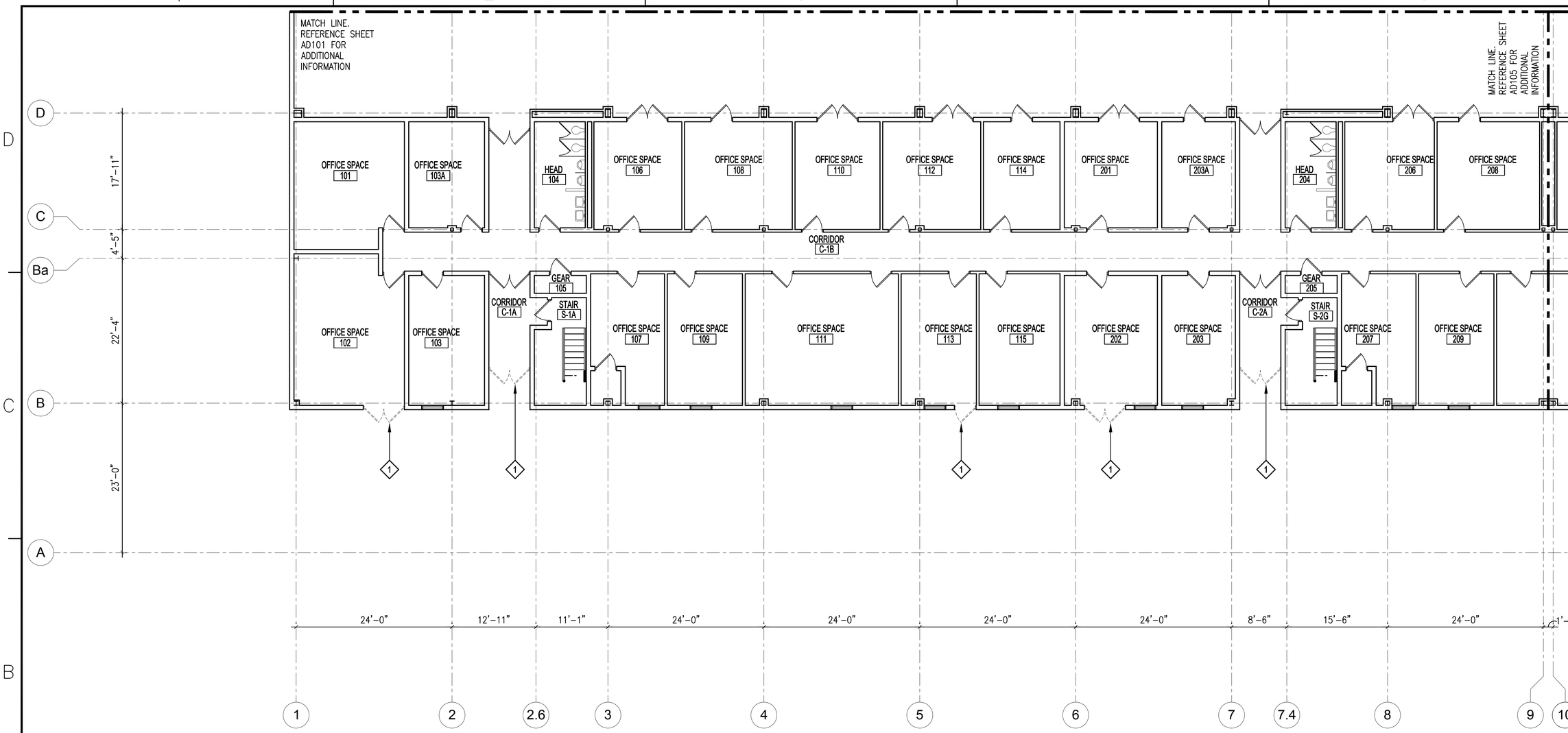

1 FIRST FLOOR DEMOLITION PLAN - AREA D

SCALE: 1/8" = 1'-0"

PROJECT NORTH

KEY NOTES

1. EXISTING EXTERIOR PERSONNEL DOORS: EXISTING DOORS AND FRAMES TO REMAIN.
   BID OPTION: REMOVE EXISTING DOOR, DOOR FRAME AND DOOR HARDWARE COMPLETE. CLEAN, PATCH AND PREPARE EXISTING OPENING TO RECEIVE DOOR AND FRAME ASSEMBLY. REFERENCE ARCHITECTURAL FLOOR PLANS AND DOOR SCHEDULE FOR ADDITIONAL INFORMATION. REFERENCE ENVIRONMENT DOCUMENTS FOR ADDITIONAL INFORMATION AND DOOR / DOOR FRAME RECYCLING PROCEDURES.
2. NOT USED.
3. NOT USED.
4. NOT USED.

CAUTION: IF THIS PLAN IS A REDUCTION, GRAPHIC SCALE MUST BE USED

0 4' 8' 12' 16'

⅛" = 1'-0

KEY PLAN

A	B	C
D	E	F

SYM	DESCRIPTION	DATE	APPR
1	FINAL SUBMISSION	5/2/2016	

NAVFAC

COMMONWEALTH OF VIRGINIA
DARRYL R. TREVILLIAN
Lic. No. 7644
5-2-16
SEAL

the PROTECTION ENGINEERING GROUP
14585 Avion Parkway, Suite 150 703-488-9900
Chantilly, Virginia 20151 fax: 703-488-9994
www.PEGroup-Inc.com

Baskervill
101 S 18th St
Ste 300 • 23219
Richmond, Va
804 648 1910
baskervill.com
A/E INFO

APPROVED 5/10/16
FOR COMMANDER NAVFAC
ACTIVITY

SATISFACTORY TO
DES JMT DRW DN CHK DRT
PM/DM KPL/IAS
BRANCH MANAGER
CHIEF ENG/ARCH Mark J. Airaghi, PE
FIRE PROTECTION DPS

DEPARTMENT OF THE NAVY
NAVAL FACILITIES ENGINEERING COMMAND ~ MID-ATLANTIC
HAMPTON ROADS IPT
NAVAL FACILITIES ENGINEERING COMMAND
NAS OCEANA – VIRGINIA BEACH, VIRGINIA
NAVAL AIR STATION OCEANA
VIRGINIA BEACH, VIRGINIA
HANGAR 111 FIRE PROTECTION AND STRUCTURAL REPAIRS
1st FLOOR DEMOLITION PLAN - ARCH - AREA D

SCALE: AS SHOWN
EPROJECT NO.: 1372146
CONSTR. CONTR. NO.
NAVFAC DRAWING NO. 12716272
SHEET 50 OF 170
AD104

DRAWFORM REVISION: 10 MAY 2014

FILE NAME: J:\GHG\2150339.0 – Oceana Naval Air Station-R111 Hanger Mod\E_Drawings\Arch\1372146_AD104 Demo Plan.dwg LAYOUT NAME: Plot Final PLOTTED: Thursday, April 14, 2016 – 3:40pm USER: dtj2

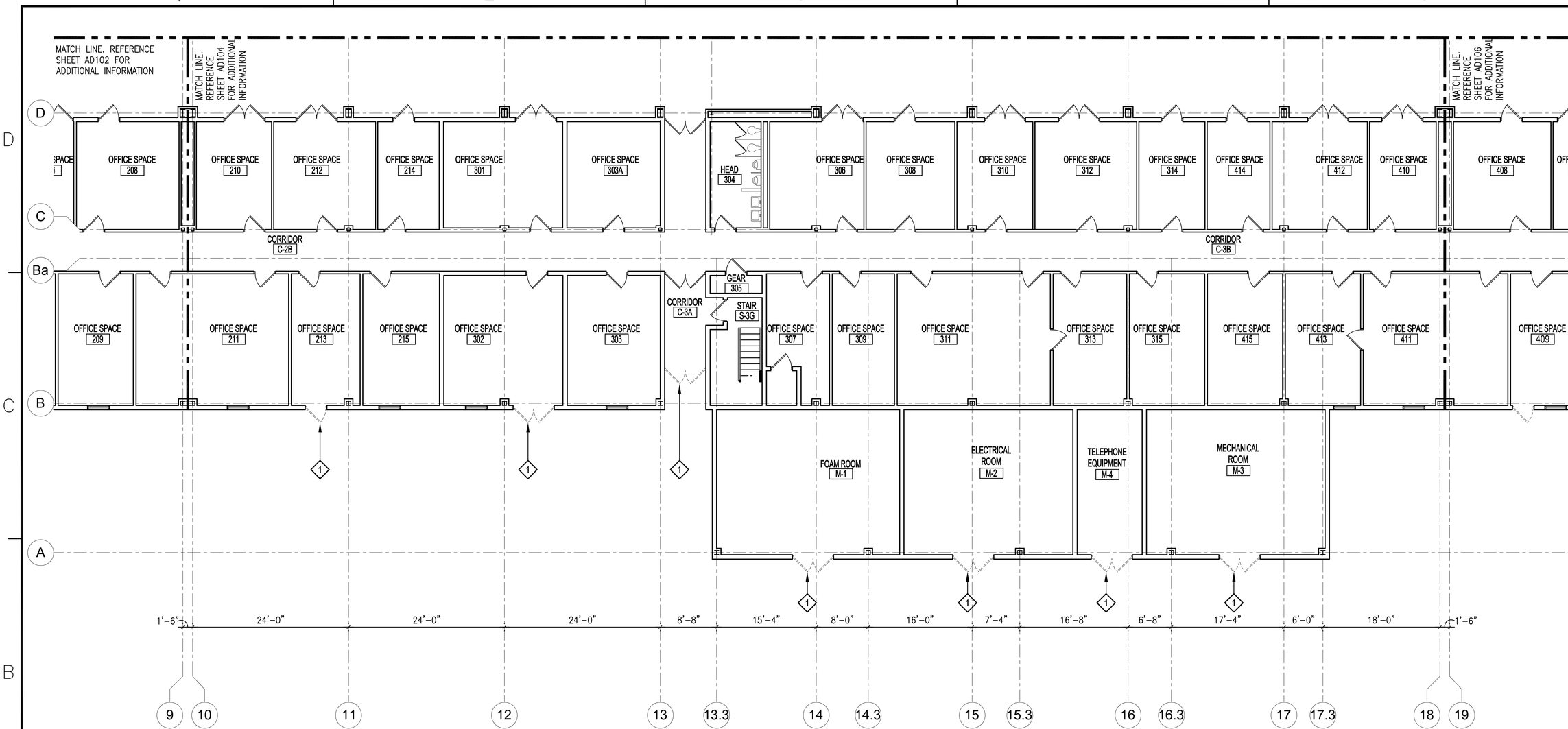

1 FIRST FLOOR DEMOLITION PLAN - AREA E

SCALE: 1/8" = 1'-0"

PROJECT NORTH

KEY NOTES

1. EXISTING EXTERIOR PERSONNEL DOORS: EXISTING DOORS AND FRAMES TO REMAIN.
   BID OPTION: REMOVE EXISTING DOOR, DOOR FRAME AND DOOR HARDWARE COMPLETE. CLEAN, PATCH AND PREPARE EXISTING OPENING TO RECEIVE DOOR AND FRAME ASSEMBLY. REFERENCE ARCHITECTURAL FLOOR PLANS AND DOOR SCHEDULE FOR ADDITIONAL INFORMATION. REFERENCE ENVIRONMENT DOCUMENTS FOR ADDITIONAL INFORMATION AND DOOR / DOOR FRAME RECYCLING PROCEDURES.
2. NOT USED.
3. NOT USED.
4. NOT USED.

CAUTION: IF THIS PLAN IS A REDUCTION, GRAPHIC SCALE MUST BE USED

0 4' 8' 12' 16'

⅛" = 1'-0

KEY PLAN

A	B	C
D	E	F

SYM	DESCRIPTION	DATE	APPR
1	FINAL SUBMISSION	5/2/2016	

NAVFAC

COMMONWEALTH OF VIRGINIA
DARRYL R. TREVILLIAN
Lic. No. 7644
5-2-16
SEAL

the PROTECTION ENGINEERING GROUP
14585 Avion Parkway, Suite 150 703-488-9900
Chantilly, Virginia 20151 fax: 703-488-9994
www.PEGroup-Inc.com

Baskervill
101 S 18th St
Ste 200 - 23219
Richmond, Va
804 648 1910
baskervill.com
A/E INFO

APPROVED 5/10/16
FOR COMMANDER NAVFAC
ACTIVITY
SATISFACTORY TO
DES JWT DRW DN CHK DRT
PM/DM KPL/IAS
BRANCH MANAGER
CHIEF ENG/ARCH Mark J. Airaghi, PE
FIRE PROTECTION DPS

DEPARTMENT OF THE NAVY
NAVAL FACILITIES ENGINEERING COMMAND
NAVAL FACILITIES ENGINEERING COMMAND ~ MID-ATLANTIC
NAS OCEANA ~ VIRGINIA BEACH, VIRGINIA
HAMPTON ROADS PPT
NAVAL AIR STATION OCEANA
VIRGINIA BEACH, VIRGINIA
HANGAR 111 FIRE PROTECTION AND STRUCTURAL REPAIRS
1st FLOOR DEMOLITION PLAN - ARCH - AREA E

SCALE: AS SHOWN
EPROJECT NO.: 1372146
CONSTR. CONTR. NO.
NAVFAC DRAWING NO. 12716273
SHEET 51 OF 170
AD105
DRAWFORM REVISION: 10 MAY 2014

FILE NAME: J:\GHD\2.150339.0 - Oceana Naval Air Station-R111 Hanger Mod\E_Drawings\Arch\1372146_AD105 Demo Plan.dwg LAYOUT NAME: Plot Final PLOTTED: Thursday, April 14, 2016 - 3:39pm USER: dtj2

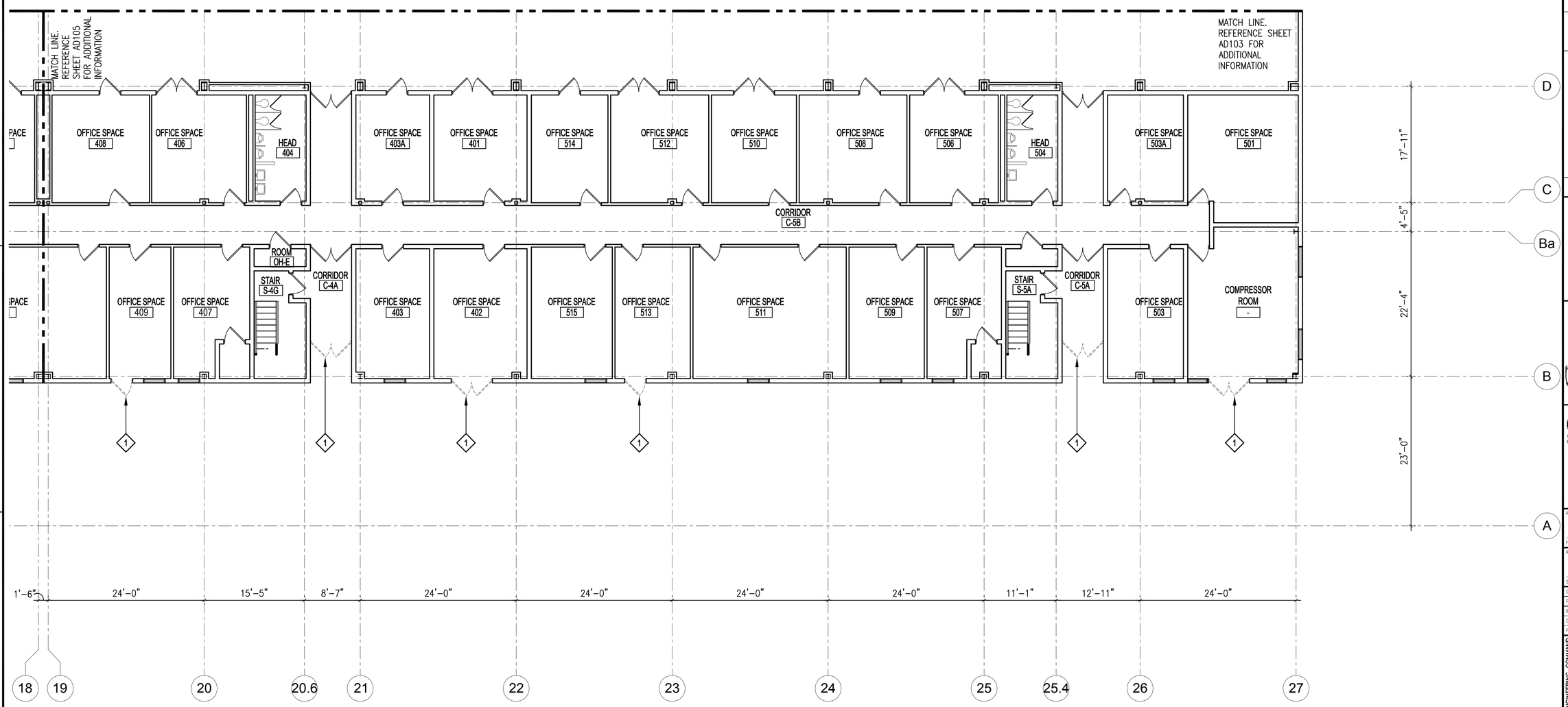

1 FIRST FLOOR DEMOLITION PLAN - AREA F

SCALE: 1/8" = 1'-0"

PROJECT NORTH

KEY NOTES

1. EXISTING EXTERIOR PERSONNEL DOORS: EXISTING DOORS AND FRAMES TO REMAIN.
   BID OPTION: REMOVE EXISTING DOOR, DOOR FRAME AND DOOR HARDWARE COMPLETE. CLEAN, PATCH AND PREPARE EXISTING OPENING TO RECEIVE DOOR AND FRAME ASSEMBLY. REFERENCE ARCHITECTURAL FLOOR PLANS AND DOOR SCHEDULE FOR ADDITIONAL INFORMATION. REFERENCE ENVIRONMENT DOCUMENTS FOR ADDITIONAL INFORMATION AND DOOR / DOOR FRAME RECYCLING PROCEDURES.
2. NOT USED.
3. NOT USED.
4. NOT USED.

CAUTION: IF THIS PLAN IS A REDUCTION, GRAPHIC SCALE MUST BE USED

0 4' 8' 12' 16'

⅛" = 1'-0

KEY PLAN

A	B	C
D	E	F

SYM	DESCRIPTION	DATE	APPR
1	FINAL SUBMISSION	5/2/2016	

NAVFAC

COMMONWEALTH OF VIRGINIA
DARRYL R. TREVILLIAN
Lic. No. 7644
ARCHITECT
5-2-16
SEAL

the PROTECTION ENGINEERING GROUP
14585 Avion Parkway, Suite 150 703-488-9990
Chantilly, Virginia 20151 fax: 703-488-9994
www.PEGroup-Inc.com

Baskervill
101 S 15th St
Ste 200 • 23219
Richmond, Va
804 343 1010
baskervill.com
A/E INFO

APPROVED
5/11/16
FOR COMMANDER NAVFAC
ACTIVITY

SATISFACTORY TO
DES JWT DRW DN CHK DRT
PM/DM KPL/IAS
BRANCH MANAGER
CHIEF ENG/ARCH Mark J. Airaghi, PE
FIRE PROTECTION DPS

DEPARTMENT OF THE NAVY
NAVAL FACILITIES ENGINEERING COMMAND
NAVAL FACILITIES ENGINEERING COMMAND ~ MID-ATLANTIC
NAS OCEANA – VIRGINIA BEACH, VIRGINIA
HAMPTON ROADS IPT
NAVAL AIR STATION OCEANA
VIRGINIA BEACH, VIRGINIA

HANGAR 111 FIRE PROTECTION AND STRUCTURAL REPAIRS

1st FLOOR DEMOLITION PLAN - ARCH - AREA F

SCALE: AS SHOWN
EPROJECT NO.: 1372146
CONSTR. CONTR. NO.
NAVFAC DRAWING NO. 12716274
SHEET 52 OF 170

AD106

DRAWFORM REVISION: 10 MAY 2014

FILE NAME: J:\GHD\2.150339.0 – Oceana Naval Air Station-R111 Hanger Mod\E_Drawings\Arch\1372146_AD106 Demo Plan.dwg LAYOUT NAME: Plot Final PLOTTED: Thursday, April 14, 2016 – 3:41pm USER: dtj2

TYPICAL ABBREVIATIONS

AFF	ABOVE FINISHED FLOOR
AD	ACCESS DOOR
AC	ACOUSTICAL
ACP	ACOUSTICAL CEILING PANEL
AWC	ACOUSTICAL WALL COVERING
ADJ	ADJUSTABLE
A/C	AIR CONDITIONING
ALT	ALTERNATE
AL	ALUMINUM
AB	ANCHOR BOLT
APPROX	APPROXIMATE
ARCH	ARCHITECTURAL
AP	ARMOR PLATE
@	AT
BSMT	BASEMENT
BRG	BEARING
BM	BENCH MARK, BEAM
BLK	BLOCK
BLKG	BLOCKING
BOT	BOTTOM
BRK	BRICK
BC	BRICK COURSES(ING)
BLDG	BUILDING
BUR	BUILT UP ROOFING
CPT	CARPET
CIP	CAST IN PLACE
CI	CAST IRON
CB	CATCH BASIN
CLG	CEILING
CTR	CENTER
℄	CENTERLINE
cm	CENTIMETER
CT	CERAMIC TILE
CHAN	CHANNEL
CV	CHECK VALVE
CO	CLEAN OUT
CLR	CLEAR
CLR WG	CLEAR WIRE GLASS
CLO	CLOSET
CMP	COMPOSITE METAL PANEL
COL	COLUMN
COMP	COMPOSITION
CONC	CONCRETE
CMU	CONCRETE MASONRY UNIT
CONT	CONTINUOUS
CJ	CONTROL JOINT
CG	CORNER GUARD
CORR	CORRIDOR
CF	CUBIC FOOT (FEET)
CFM	CUBIC FOOT PER MINUTE
CY	CUBIC YARD
CYL	CYLINDER
DP	DAMPPROOFING
DEG	DEGREE
DEMO	DEMOLITION
D	DEPTH
DET	DETAIL
DIAG	DIAGONAL
DIA	DIAMETER
DIFF	DIFFUSER
DIM	DIMENSION
DISP	DISPENSER
DIV	DIVISION
DBL	DOUBLE
DN	DOWN
DS	DOWNSPOUT
DR	DOOR, DRAIN
DWG	DRAWING
DWGS	DRAWINGS
DF	DRINKING FOUNTAIN
EA	EACH
EWC	ELECTRIC WATER COOLER
ELEC	ELECTRICAL
ELEV	ELEVATOR, ELEVATION
EMER	EMERGENCY
ENGR	ENGINEER(ING)
EQ	EQUAL
EQUIP	EQUIPMENT
EPDM	ETHYLENE PROPYLENE DIENE MONOMER
EXIST	EXISTING
EXPA	EXPANSION ANCHOR
EB	EXPANSION BOLT
EJ	EXPANSION JOINT
EXT	EXTERIOR
EIFS	EXTERIOR INSULATION AND FINISH SYSTEM
FWC	FABRIC WALL COVERING
FOF	FACE OF FINISH
FOS	FACE OF STUD
F	FAHRENHEIT
FV	FIELD VERIFIED
FF	FINISH FLOOR
FIN	FINISH(ED)
FO	FINISHED OPENING
FA	FIRE ALARM
FE	FIRE EXTINGUISHER
FEC	FIRE EXTINGUISHER CABINET
FHC	FIRE HOSE CABINET
FRTW	FIRE RETARDANT TREATED WOOD
FLASH	FLASHING
FLR	FLOOR
FD	FLOOR DRAIN
FLUOR	FLUORESCENT
FT	FOOT, FEET
FTG	FOOTING
FDN	FOUNDATION
FURN	FURNITURE
FUR	FURRED
GA	GAGE
GALV	GALVANIZED
GEN	GENERAL
GC	GENERAL CONTRACTOR
GL	GLASS OR GLAZING
GNV	GOOSE NECK VENTILATOR
GB	GRAB BAR
GND	GROUND
GR	GROUT
GYP	GYPSUM
GYP BD	GYPSUM BOARD
HRL	HANDRAIL
HDW	HARDWARE
HWD	HARDWOOD
HVAC	HEATING, VENTILATING, AIR CONDITIONING
HD	HEAVY DUTY
HGT	HEIGHT
H	HIGH
HC	HOLLOW CORE
HM	HOLLOW METAL
HORIZ	HORIZONTAL
HB	HOSE BIBB
HR	HOUR
IN	INCH
ID	INSIDE DIAMETER
INSUL	INSULATION
INT	INTERIOR
JAN	JANITOR
JT	JOINT
JT B	JOINT BACKER
JST	JOIST
JCT	JUNCTION
KP	KICK PLATE
KIT	KITCHEN
KO	KNOCKOUT
LAM	LAMINATE, LAMINATED
LAM GL	LAMINATED GLASS
LAV	LAVATORY
LH	LEFT HAND
L	LENGTH
LB	POUND
LBF	POUNDS–FORCE
LIN	LINEAR
LLV	LONG LEG VERTICAL
LVR	LOUVER
MFR	MANUFACTURER
MAS	MASONRY
MO	MASONRY OPENING
MATL	MATERIAL
MAX	MAXIMUM
MECH	MECHANICAL
MEMB	MEMBRANE
MET	METAL
MT	METAL THRESHOLD
MEZZ	MEZZANINE
mm	MILLIMETER
MWK	MILLWORK
MIN	MINIMUM
MIR	MIRROR
MISC	MISCELLANOUS
MLD	MOLDING
MULL	MULLION
NOM	NOMINAL
N	NORTH
NIC	NOT IN CONTRACT
NTS	NOT TO SCALE
NO	NUMBER
OFF	OFFICE
OC	ON CENTER
OPNG	OPENING
OPP	OPPOSITE
OPP H	OPPOSITE HAND
OD	OUTSIDE DIAMETER
OVFL	OVERFLOW
OH	OVERHEAD
OFCI	OWNER FURNISHED, CONTRACTOR INSTALLED
PNT	PAINT
PR	PAIR
PAR	PARALLEL
PART	PARTIAL
PARTN	PARTITION
PERIM	PERIMETER
PERP	PERPENDICULAR
PP	PITCH POCKET
PLAS	PLASTER, PLASTIC
PLAM	PLASTIC LAMINATE
PWC	PLASTIC WALL COVERING
PL	PLATE
PLBG	PLUMBING
PLWD	PLYWOOD
PRV	POWERED ROOF VENTILATOR
#,LBS	POUNDS
PSF	POUNDS PER SQUARE FOOT
PSI	POUNDS PER SQUARE INCH
PT	PRESSURE TREATED
QUAL	QUALITY
QTY	QUANTITY
QT	QUARRY TILE
RAD	RADIUS
RL	RAIN LEADER
RECEP	RECEPTACLE
REF	REFERENCE
REFL	REFLECTED
REFR	REFRIGERATOR
REG	REGULAR
REINF	REINFORCED
REBAR	REINFORCING BAR
REP	REPAIR
REQ	REQUIRE, REQUIRED
RESIL	RESILIENT
RA	RETURN AIR
REV	REVISION
RT	RIGHT
RH	RIGHT HAND
R	RISER
RD	ROOF DRAIN
RFG	ROOFING
RM	ROOM
RO	ROUGH OPENING
RB	RUBBER, RUBBER BASE
SND	SANITARY NAPKIN DISPENSER
SNR	SANITARY NAPKIN RECEPTACLE
SCHED	SCHEDULE
SCUP	SCUPPER
SECT	SECTION
SS	SERVICE SINK, STAINLESS STEEL
SHT	SHEET
SV	SHEET VINYL
SHWR	SHOWER
SIM	SIMILAR
SPM	SINGLE PLY MEMBRANE
SD	SOAP DISPENSER
SC	SOLID CORE
S	SOUTH
SPEC	SPECIFICATION
SP	STAND PIPE
STL	STEEL
STN	STONE
STOR	STORAGE
STRUCT	STRUCTURAL
SUSP	SUSPENDED
SYS	SYSTEM
TEL	TELEPHONE
TEMP	TEMPERED, TEMPORARY
TEMP GL	TEMPERED GLASS
TERR	TERRAZZO
THK	THICK
TWS	THRU–WALL SCUPPER
TLT	TOILET
TTD	TOILET TISSUE DISPENSER
TOC	TOP OF CURB
TOM	TOP OF MASONRY
TOSL	TOP OF SLAB
TOS	TOP OF STEEL
T&G	TONGUE & GROOVE
TB	TOWEL BAR
T	TREAD
TD	TRENCH DRAIN
TYP	TYPICAL
UC	UNDERCOUNTER, UNDERCUT
UNFIN	UNFINISHED
UNO	UNLESS NOTED OTHERWISE
VC	VALVE CABINET
VB	VAPOR BARRIER, VINYL BASE
VNR	VENEER
VP	VENT PIPE, VAPOR PROOF
VTR	VENT THRU ROOF
VIF	VERIFY IN FIELD
VERT	VERTICAL
VEST	VESTIBULE
VIN	VINYL
VCT	VINYL COMPOSITION TILE
VWC	VINYL WALL COVERING
WAINS	WAINSCOT
WH	WATER HEATER
WR	WATER RESISTANT, WASTE RECEPTACLE
WPR	WATERPROOFING
WT	WEIGHT
WWF	WELDED WIRE FABRIC
W	WIDTH
WIN	WINDOW
WG	WIRE GLASS
W/	WITH
W/O	WITHOUT
WD	WOOD
WB	WOOD BASE
WPT	WORK POINT

MATERIAL INDICATIONS

- CONCRETE MASONRY (CMU)
- CONCRETE
- STEEL
- POROUS FILL
- SOIL
- RIGID INSULATION
- BATT INSULATION
- PLASTER OR SAND

SYMBOLS

- A — WINDOW ELEVATION
- D — KEY NOTE
- E — COLUMN LINE
- WORK OR DATUM POINT
- C / 9'–0" — CEILING FINISH; CEILING HEIGHT
- F — FLOOR FINISH
- B — BASE FINISH
- W — WALL FINISH
- N — FINISH NOTE
- CW123A — CASEWORK NUMBER
- 123A — DOOR NUMBER
- OFFICE SPACE / 315 — ROOM NAME; ROOM NUMBER
- 2 — PARTITION TYPE
- 2A / 3A / A4.10 / 1A — ELEVATION CALL–OUT; DRAWING WHERE SHOWN
- 2A / 1A / A1.1 — SECTION CALL–OUT; DRAWING WHERE SHOWN
- 1A / A1.11 — DETAIL CALL–OUT; DRAWING WHERE SHOWN
- FIRE EXTINGUISHER

PARTITION INDICATIONS

- MASONRY

STM	DESCRIPTION	DATE	APPR
1	FINAL SUBMISSION	5/2/2016	

NAVFAC

COMMONWEALTH OF VIRGINIA
DARRYL R. TREVILLIAN
Lic. No. 7644
5.2.16
SEAL

the PROTECTION ENGINEERING GROUP
14585 Avion Parkway, Suite 150 Chantilly, Virginia 20151
703-488-9900 fax: 703-488-9994
www.PEGroup-Inc.com

Baskervill
101 S 18th St
Ste 200 • 23219
Richmond, Va
804 648 1910
baskervill.com
A/E INFO

APPROVED 5/2/16
FOR COMMANDER NAVFAC
ACTIVITY
SATISFACTORY TO
DES JWT DRW DN CHK DRT
PM/DM KPL/IAS
BRANCH MANAGER
CHIEF ENG/ARCH Mark J. Airaghi, PE
FIRE PROTECTION DPS

DEPARTMENT OF THE NAVY
NAVAL FACILITIES ENGINEERING COMMAND
HAMPTON ROADS DIV
NAVAL FACILITIES ENGINEERING COMMAND – MID-ATLANTIC
NAS OCEANA – VIRGINIA BEACH, VIRGINIA
NAVAL AIR STATION OCEANA
VIRGINIA BEACH, VIRGINIA

HANGAR 111 FIRE PROTECTION AND STRUCTURAL REPAIRS

REFERENCE SHEET - ARCHITECTURAL

SCALE: AS SHOWN
EPROJECT NO.: 1372146
CONSTR. CONTR. NO.
NAVFAC DRAWING NO. 12716268
SHEET 46 OF 170
A-001
DRAWFORM REVISION: 10 MAY 2014

FILE NAME: J:\GHD\2-1503390 - Oceana Naval Air Station-R111 Hanger Mod\E_Drawings\Arch\1372146_A001 General Notes.dwg LAYOUT NAME: Plot Final PLOTTED: Thursday, April 14, 2016 - 3:00pm USER: dtj2

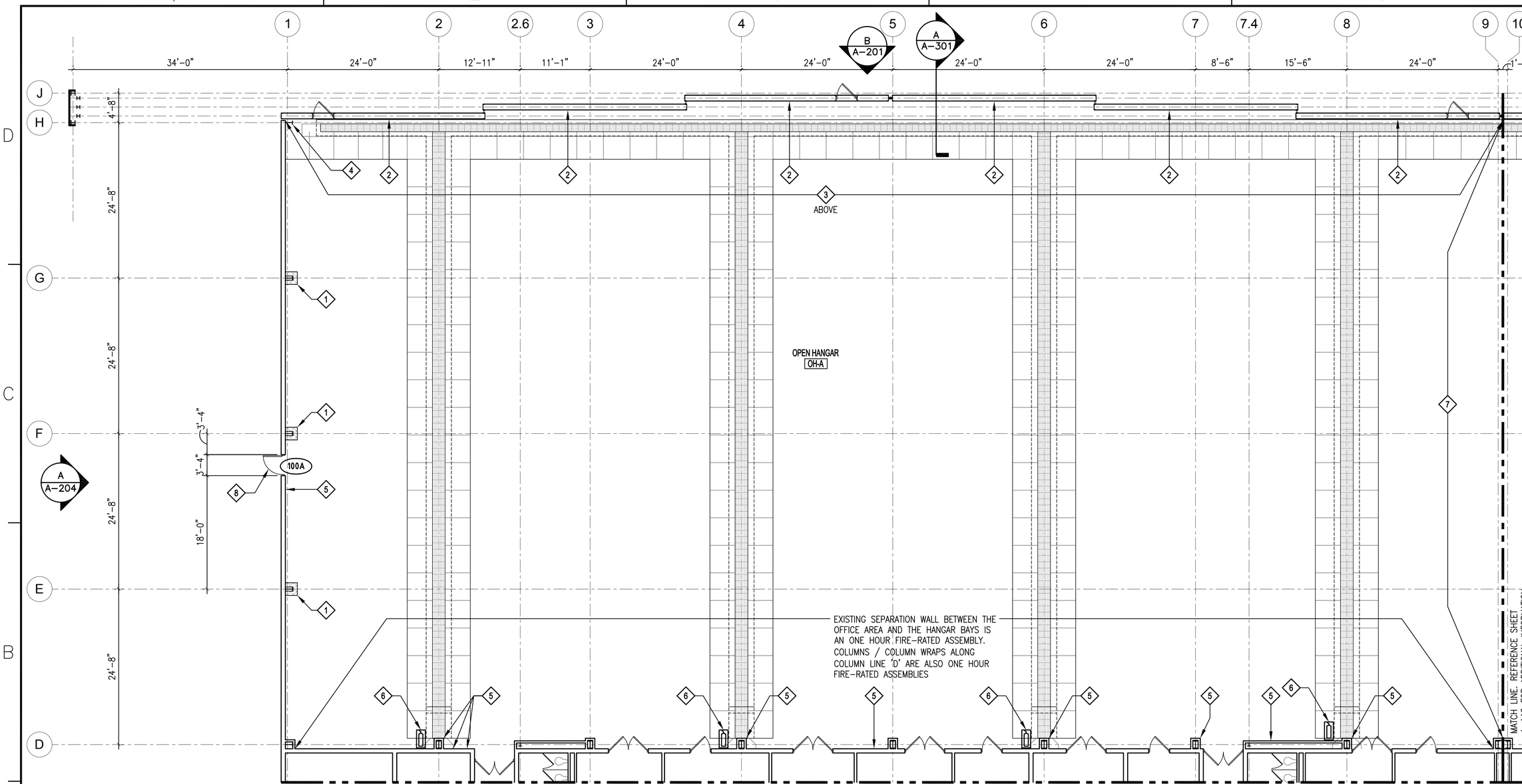

1 FIRST FLOOR PLAN - AREA A

SCALE: 1/8" = 1'-0"

PROJECT NORTH

GENERAL NOTE: REFERENCE SHEET A-601 FOR DOOR SCHEDULE

KEY NOTES

1. PROTECT EXISTING BUILDING COLUMN BY ONE HOUR FIRE RATED ASSEMBLY PER UL DESIGN U905. WALL ASSEMBLY IS 8" CMU WITH TOP OF MASONRY AT 20'-0" AFF. REFERENCE STRUCTURAL DRAWINGS FOR ADDITIONAL INFORMATION

2. EXISTING HANGAR DOOR MUST REMAIN IN PLACE WHILE WORK OCCURS. PAINT EXISTING STEEL DOOR FRAME STRUCTURE PER INTERIOR STEEL PAINT SPECIFICATION. ADD INSULATED TRANSLUCENT PANELS (10'-0" HIGH x 32'-0" WIDE) IN STEEL STRUCTURE. PROVIDE 2 1/2" (R-15) FOIL FACED RIGID POLYISOCYANURATE INSULATION WITHIN STEEL DOOR STRUCTURE FULL WIDTH AND FULL HEIGHT ABOVE AND BELOW INSULATED TRANSLUCENT PANELS. PROVIDE MOTOR AND CONTROLS; REFERENCE ELECTRICAL DRAWINGS FOR ADDITIONAL INFORMATION. PROVIDE INTERIOR AND EXTERIOR METAL PANELS (MATCH EXISTING PANEL PROFILE) WITH FASTENERS, ACCESSORIES, SEALANTS, TRIM AND FLASHING.

3. EXISTING BATT INSULATION ABOVE HANGAR DOORS: EXISTING BATT INSULATION TO REMAIN.
BID OPTION: REPLACE EXISTING BATT INSULATION WITH 1" INSULATED METAL LINER PANEL. SIZE, COLOR AND PROFILE MUST MATCH EXISTING EXTERIOR WALL INSULATED METAL LINER PANEL. LINER PANEL MUST EXTEND FROM COLUMN LINE 'H' TO EXTERIOR WALL BEYOND COLUMN LINE 'J' ALONG COLUMN '1' TO COLUMN LINE '27'.

4. PROTECT EXISTING BUILDING COLUMN BY ONE HOUR FIRE RATED ASSEMBLY PER UL DESIGN X629. APPLY EXTERIOR RATED INTUMESCENT COATING UP TO 20'-0" AFF.

5. PATCH AND REPAIR WALL AT REMOVED FIRE PROTECTION DEVICE LOCATION (MASONRY PARTITION). WALL MATERIAL MUST MATCH EXISTING AND THE FINISHED FACE MUST ALIGN WITH ADJACENT EXISTING FINISHED FACE. REFERENCE FIRE PROTECTION DRAWINGS FOR ADDITIONAL INFORMATION

6. RELOCATE FIRE EXTINGUISHER AND MOUNTING SYSTEM FOR INSTALLATION OF FIRE PROTECTION SYSTEM.

7. PROVIDE TEMPORARY DUST AND SOUND PARTITION WALL AT THE ONSET OF EACH PHASE OF CONSTRUCTION. REFERENCE SPECIFICATION – SUMMARY OF WORK FOR ADDITIONAL PHASING INFORMATION. REFERENCE SECTION 'B' ON SHEET A-301 FOR WALL SECTION AND DETAILS.

8. EXISTING EXTERIOR PERSONNEL DOORS: EXISTING DOORS AND FRAMES TO REMAIN.
BID OPTION: REMOVE EXISTING DOOR, DOOR FRAME AND DOOR HARDWARE COMPLETE. CLEAN, PATCH AND PREPARE EXISTING OPENING TO RECEIVE DOOR AND FRAME ASSEMBLY. REFERENCE ARCHITECTURAL FLOOR PLANS AND DOOR SCHEDULE FOR ADDITIONAL INFORMATION. REFERENCE ENVIRONMENT DOCUMENTS FOR ADDITIONAL INFORMATION AND DOOR / DOOR FRAME RECYCLING PROCEDURES.

CAUTION: IF THIS PLAN IS A REDUCTION, GRAPHIC SCALE MUST BE USED

0 4' 8' 12' 16'

⅛" = 1'-0

KEY PLAN

A	B	C
D	E	F

STM	DESCRIPTION	DATE	APPR
1	FINAL SUBMISSION	5/2/2016	

NAVFAC

COMMONWEALTH OF VIRGINIA
DARRYL R. TREVILLIAN
Lic. No. 7644
5.2.16
SEAL

the PROTECTION ENGINEERING GROUP
14585 Avion Parkway, Suite 150 703-488-9900
Chantilly, Virginia 20151 fax: 703-488-9994
www.PEGroup-Inc.com

Baskervill
101 S 18th St
Ste 300 - 23219
Richmond, Va
804 343 1010
baskervill.com
A/E INFO

APPROVED 5/1/16
FOR COMMANDER NAVFAC
ACTIVITY

SATISFACTORY TO
DES JWT DRW DN CHK DRT
PM/DM KPL/IAS
BRANCH MANAGER
CHIEF ENG/ARCH Mark J. Airaghi, PE
FIRE PROTECTION DPS

DEPARTMENT OF THE NAVY
NAVAL FACILITIES ENGINEERING COMMAND
NAVAL FACILITIES ENGINEERING COMMAND ~ MID-ATLANTIC
NAS OCEANA ~ VIRGINIA BEACH, VIRGINIA
HAMPTON ROADS IPT
NAVAL AIR STATION OCEANA
VIRGINIA BEACH, VIRGINIA
HANGAR 111 FIRE PROTECTION AND STRUCTURAL REPAIRS
1st FLOOR PLAN - ARCHITECTURAL - AREA A

SCALE: AS SHOWN
EPROJECT NO.: 1372146
CONSTR. CONTR. NO.
NAVFAC DRAWING NO. 12716275
SHEET 53 OF 170
A-111

DRAWFORM REVISION: 10 MAY 2014

FILE NAME: J:\GHD\2.1503390 - Oceana Naval Air Station-R111 Hanger Mod\E_Drawings\Arch\1372146_A111 Floor Plan.dwg LAYOUT NAME: Plot Final PLOTTED: Thursday, April 14, 2016 - 2:48pm USER: dtj2

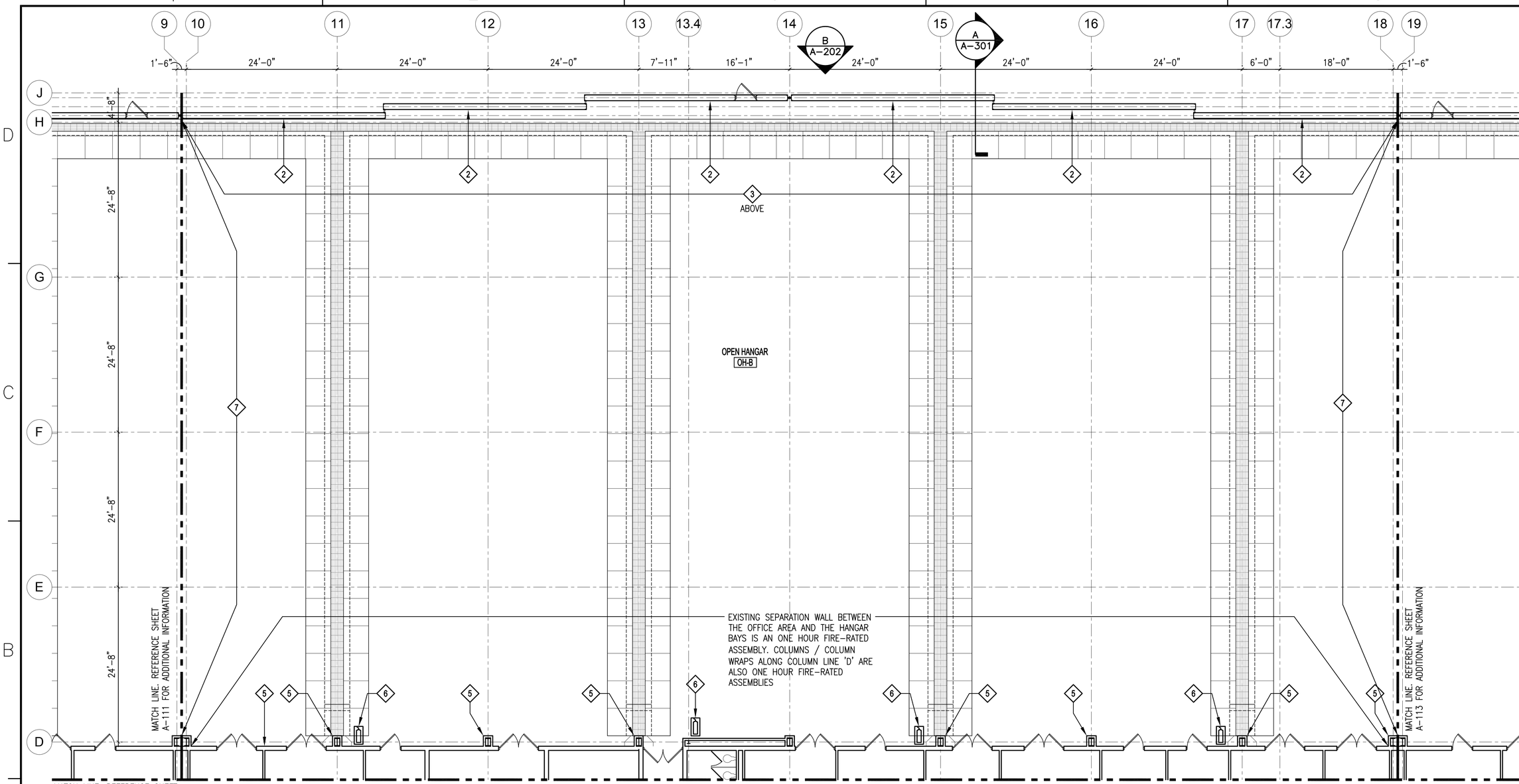

1 FIRST FLOOR PLAN - AREA B

SCALE: 1/8" = 1'-0"

GENERAL NOTE: REFERENCE SHEET A-601 FOR DOOR SCHEDULE

PROJECT NORTH

KEY NOTES

1. NOT USED.

2. EXISTING HANGAR DOOR MUST REMAIN IN PLACE WHILE WORK OCCURS. PAINT EXISTING STEEL DOOR FRAME STRUCTURE PER INTERIOR STEEL PAINT SPECIFICATION. ADD INSULATED TRANSLUCENT PANELS (10'-0" HIGH x 32'-0" WIDE) IN STEEL STRUCTURE. PROVIDE 2 1/2" (R-15) FOIL FACED RIGID POLYISOCYANURATE INSULATION WITHIN STEEL DOOR STRUCTURE FULL WIDTH AND FULL HEIGHT ABOVE AND BELOW INSULATED TRANSLUCENT PANELS. PROVIDE MOTOR AND CONTROLS; REFERENCE ELECTRICAL DRAWINGS FOR ADDITIONAL INFORMATION. PROVIDE EXPOSED FASTENER METAL PANELS (MATCH EXISTING PANEL PROFILE) WITH FASTENERS, ACCESSORIES, SEALANTS, TRIM AND FLASHING.

3. EXISTING BATT INSULATION ABOVE HANGAR DOORS: EXISTING BATT INSULATION TO REMAIN.
BID OPTION: REPLACE EXISTING BATT INSULATION WITH 1" INSULATED METAL LINER PANEL. SIZE, COLOR AND PROFILE MUST MATCH EXISTING EXTERIOR WALL INSULATED METAL LINER PANEL. LINER PANEL MUST EXTEND FROM COLUMN LINE 'H' TO EXTERIOR WALL BEYOND COLUMN LINE 'J' ALONG COLUMN '1' TO COLUMN LINE '27'.

4. NOT USED.

5. PATCH AND REPAIR WALL AT REMOVED FIRE PROTECTION DEVICE LOCATION (MASONRY PARTITION). WALL MATERIAL MUST MATCH EXISTING AND THE FINISHED FACE MUST ALIGN WITH ADJACENT EXISTING FINISHED FACE. REFERENCE FIRE PROTECTION DRAWINGS FOR ADDITIONAL INFORMATION

6. RELOCATE FIRE EXTINGUISHER AND MOUNTING SYSTEM FOR INSTALLATION OF FIRE PROTECTION SYSTEM.

7. PROVIDE TEMPORARY DUST AND SOUND PARTITION WALL AT THE ONSET OF EACH PHASE OF CONSTRUCTION. REFERENCE SPECIFICATION – SUMMARY OF WORK FOR ADDITIONAL PHASING INFORMATION. REFERENCE SECTION 'B' ON SHEET A-301 FOR WALL SECTION AND DETAILS.

8. NOT USED.

CAUTION: IF THIS PLAN IS A REDUCTION, GRAPHIC SCALE MUST BE USED

0 4' 8' 12' 16'

⅛" = 1'-0

KEY PLAN

A	B	C
D	E	F

SYM	DESCRIPTION	DATE	APPR
1	FINAL SUBMISSION	5/2/2016	

NAVFAC

COMMONWEALTH OF VIRGINIA
DARRYL R. TREVILLIAN
Lic. No. 7644
5-2-16
SEAL

the PROTECTION ENGINEERING GROUP
14585 Avion Parkway, Suite 150 703-488-9995
Chantilly, Virginia 20151 fax: 703-488-9994
www.PEGroup-Inc.com

Baskervill
101 S 18th St
Ste 300 • 23219
Richmond, Va
804 343 1010
baskervill.com
A/E INFO

APPROVED 5/2/16
FOR COMMANDER NAVFAC

ACTIVITY

SATISFACTORY TO

DES JMT DRW DN CHK DRT
PM/DM KPL/IAS
BRANCH MANAGER
CHIEF ENG/ARCH Mark J. Airaghi, PE
FIRE PROTECTION DPS

DEPARTMENT OF THE NAVY
NAVAL FACILITIES ENGINEERING COMMAND ~ MID-ATLANTIC
HAMPTON ROADS PT
NAVAL AIR STATION OCEANA
IAS OCEANA – VIRGINIA BEACH, VIRGINIA
VIRGINIA BEACH, VIRGINIA

HANGAR 111 FIRE PROTECTION AND STRUCTURAL REPAIRS

1st FLOOR PLAN - ARCHITECTURAL - AREA B

SCALE: AS SHOWN
EPROJECT NO.: 1372146
CONSTR. CONTR. NO.
NAVFAC DRAWING NO. 12716276
SHEET 54 OF 170

A-112

DRAWFORM REVISION: 10 MAY 2014

FILE NAME: J:\GHD\2.1503339.0 – Oceana Naval Air Station-R111 Hanger Mod\E_Drawings\Arch\1372146_A112 Floor Plan.dwg LAYOUT NAME: Plot Final PLOTTED: Thursday, April 14, 2016 – 2:47pm USER: dtj2

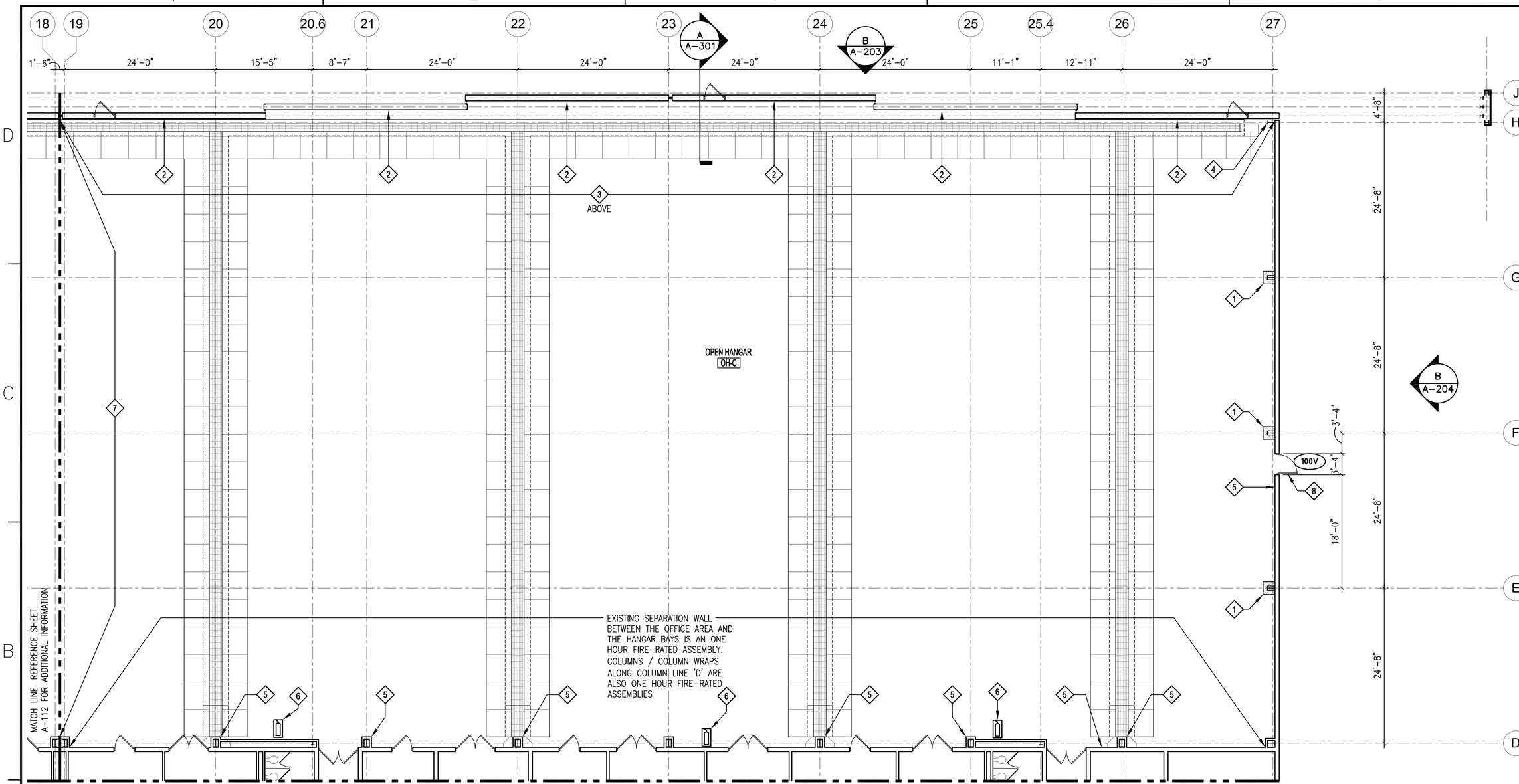

1 FIRST FLOOR PLAN - AREA C

SCALE: 1/8" = 1'–0"

GENERAL NOTE: REFERENCE SHEET A–601 FOR DOOR SCHEDULE

KEY NOTES

1. PROTECT EXISTING BUILDING COLUMN BY ONE HOUR FIRE RATED ASSEMBLY PER UL DESIGN U905. WALL ASSEMBLY IS 8" CMU WITH TOP OF MASONRY AT 20'–0" AFF. REFERENCE STRUCTURAL DRAWINGS FOR ADDITIONAL INFORMATION
2. EXISTING HANGAR DOOR MUST REMAIN IN PLACE WHILE WORK OCCURS. PAINT EXISTING STEEL DOOR FRAME STRUCTURE PER INTERIOR STEEL PAINT SPECIFICATION. ADD INSULATED TRANSLUCENT PANELS (10'–0" HIGH x 32'–0" WIDE) IN STEEL STRUCTURE. PROVIDE 2 1/2" (R–15) FOIL FACED RIGID POLYISOCYANURATE INSULATION WITHIN STEEL DOOR STRUCTURE FULL WIDTH AND FULL HEIGHT ABOVE AND BELOW INSULATED TRANSLUCENT PANELS. PROVIDE MOTOR AND CONTROLS; REFERENCE ELECTRICAL DRAWINGS FOR ADDITIONAL INFORMATION. PROVIDE EXPOSED FASTENER METAL PANELS (MATCH EXISTING PANEL PROFILE) WITH FASTENERS, ACCESSORIES, SEALANTS, TRIM AND FLASHING.
3. EXISTING BATT INSULATION ABOVE HANGAR DOORS: EXISTING BATT INSULATION TO REMAIN.
   BID OPTION: REPLACE EXISTING BATT INSULATION WITH 1" INSULATED METAL LINER PANEL. SIZE, COLOR AND PROFILE MUST MATCH EXISTING EXTERIOR WALL INSULATED METAL LINER PANEL. LINER PANEL MUST EXTEND FROM COLUMN LINE 'H' TO EXTERIOR WALL BEYOND COLUMN LINE 'J' ALONG COLUMN '1' TO COLUMN LINE '27'.
4. PROTECT EXISTING BUILDING COLUMN BY ONE HOUR FIRE RATED ASSEMBLY PER UL DESIGN X629. APPLY EXTERIOR RATED INTUMESCENT COATING UP TO 20'–0" AFF.
5. PATCH AND REPAIR WALL AT REMOVED FIRE PROTECTION DEVICE LOCATION (MASONRY PARTITION). WALL MATERIAL MUST MATCH EXISTING AND THE FINISHED FACE MUST ALIGN WITH ADJACENT EXISTING FINISHED FACE. REFERENCE FIRE PROTECTION DRAWINGS FOR ADDITIONAL INFORMATION
6. RELOCATE FIRE EXTINGUISHER AND MOUNTING SYSTEM FOR INSTALLATION OF FIRE PROTECTION SYSTEM.
7. PROVIDE TEMPORARY DUST AND SOUND PARTITION WALL AT THE ONSET OF EACH PHASE OF CONSTRUCTION. REFERENCE SPECIFICATION – SUMMARY OF WORK FOR ADDITIONAL PHASING INFORMATION. REFERENCE SECTION 'B' ON SHEET A–301 FOR WALL SECTION AND DETAILS.
8. EXISTING EXTERIOR PERSONNEL DOORS: EXISTING DOORS AND FRAMES TO REMAIN.
   BID OPTION: REMOVE EXISTING DOOR, DOOR FRAME AND DOOR HARDWARE COMPLETE. CLEAN, PATCH AND PREPARE EXISTING OPENING TO RECEIVE DOOR AND FRAME ASSEMBLY. REFERENCE ARCHITECTURAL FLOOR PLANS AND DOOR SCHEDULE FOR ADDITIONAL INFORMATION. REFERENCE ENVIRONMENT DOCUMENTS FOR ADDITIONAL INFORMATION AND DOOR / DOOR FRAME RECYCLING PROCEDURES.

CAUTION: IF THIS PLAN IS A REDUCTION, GRAPHIC SCALE MUST BE USED

0 4' 8' 12' 16'

⅛" = 1'–0

KEY PLAN

A	B	C
D	E	F

SYM	DESCRIPTION	DATE	APPR
1	FINAL SUBMISSION	5/2/2016	

NAVFAC

COMMONWEALTH OF VIRGINIA
DARRYL R. TREVILLIAN
Lic. No. 7644
5-2-16
SEAL

the PROTECTION ENGINEERING GROUP
14585 Avion Parkway, Suite 150 703-488-9900
Chantilly, Virginia 20151 fax: 703-488-9994
www.PEGroup-Inc.com

Baskervill
101 S 18th St
Ste 300 • 23219
Richmond, Va
804 343 1010
baskervill.com
A/E INFO

APPROVED 5/2/16
FOR COMMANDER NAVFAC
ACTIVITY

SATISFACTORY TO
DES JWT DRW DN CHK DRT
PM/DM KPL/IAS
BRANCH MANAGER
CHIEF ENG/ARCH Mark J. Airaghi, PE
FIRE PROTECTION DPS

DEPARTMENT OF THE NAVY
NAVAL FACILITIES ENGINEERING COMMAND
NAVAL FACILITIES ENGINEERING COMMAND ~ MID-ATLANTIC
NAS OCEANA – VIRGINIA BEACH, VIRGINIA
HAMPTON ROADS IPT
NAVAL AIR STATION OCEANA
VIRGINIA BEACH, VIRGINIA
HANGAR 111 FIRE PROTECTION AND STRUCTURAL REPAIRS
1st FLOOR PLAN - ARCHITECTURAL - AREA C

SCALE: AS SHOWN
EPROJECT NO.: 1372146
CONSTR. CONTR. NO.
NAVFAC DRAWING NO. 12716277
SHEET 55 OF 170
A-113

DRAWFORM REVISION: 10 MAY 2014

FILE NAME: J:\GHD\2.1503390 – Oceana Naval Air Station–R111 Hanger Mod\E_Drawings\Arch\1372146_A113 Floor Plan.dwg LAYOUT NAME: Plot Final PLOTTED: Thursday, April 14, 2016 – 2:46pm USER: dtj2

1 FIRST FLOOR PLAN - AREA D

SCALE: 1/8" = 1'-0"

GENERAL NOTE: REFERENCE SHEET A-601 FOR DOOR SCHEDULE

PROJECT NORTH

KEY NOTES

1. NOT USED.
2. NOT USED.
3. NOT USED.
4. NOT USED.
5. NOT USED.
6. NOT USED.
7. NOT USED.
8. EXISTING EXTERIOR PERSONNEL DOORS: EXISTING DOORS AND FRAMES TO REMAIN.
BID OPTION: REMOVE EXISTING DOOR, DOOR FRAME AND DOOR HARDWARE COMPLETE. CLEAN, PATCH AND PREPARE EXISTING OPENING TO RECEIVE DOOR AND FRAME ASSEMBLY. REFERENCE ARCHITECTURAL FLOOR PLANS AND DOOR SCHEDULE FOR ADDITIONAL INFORMATION. REFERENCE ENVIRONMENT DOCUMENTS FOR ADDITIONAL INFORMATION AND DOOR / DOOR FRAME RECYCLING PROCEDURES.

CAUTION: IF THIS PLAN IS A REDUCTION, GRAPHIC SCALE MUST BE USED

0 4' 8' 12' 16'

⅛" = 1'-0

KEY PLAN

A	B	C
D	E	F

MATCH LINE. REFERENCE SHEET A-115 FOR ADDITIONAL INFORMATION

STM	DESCRIPTION	DATE	APPR
1	FINAL SUBMISSION	5/2/2016	

NAVFAC

COMMONWEALTH OF VIRGINIA
DARRYL R. TREVILLIAN
Lic. No. 7644
5-2-16
SEAL

the PROTECTION ENGINEERING GROUP
14585 Avion Parkway, Suite 150 703-488-9900
Chantilly, Virginia 20151 fax: 703-488-9994
www.PEGroup-Inc.com

Baskervill
101 S 18th St
Ste 300 • 23219
Richmond, Va
804 648 1910
baskervill.com
A/E INFO

APPROVED 5/2/16
FOR COMMANDER NAVFAC
ACTIVITY
SATISFACTORY TO
DES JWT DRW DN CHK DRT
PM/DM KPL/IAS
BRANCH MANAGER
CHIEF ENG/ARCH Mark J. Airaghi, PE
FIRE PROTECTION DPS

DEPARTMENT OF THE NAVY
NAVAL FACILITIES ENGINEERING COMMAND ~ MID-ATLANTIC
HAMPTON ROADS IPT
NAVAL FACILITIES ENGINEERING COMMAND
NAS OCEANA ~ VIRGINIA BEACH, VIRGINIA
NAVAL AIR STATION OCEANA
VIRGINIA BEACH, VIRGINIA
HANGAR 111 FIRE PROTECTION AND STRUCTURAL REPAIRS
1st FLOOR PLAN - ARCHITECTURAL - AREA D

SCALE: AS SHOWN
EPROJECT NO.: 1372146
CONSTR. CONTR. NO.
NAVFAC DRAWING NO. 12716278
SHEET 56 OF 170
A-114

DRAWFORM REVISION: 10 MAY 2014

FILE NAME: J:\GHD\2.1503390 - Oceana Naval Air Station-R111 Hanger Mod\E_Drawings\Arch\1372146_A114 Floor Plan.dwg LAYOUT NAME: Plot Final PLOTTED: Thursday, April 14, 2016 - 2:46pm USER: dtj2

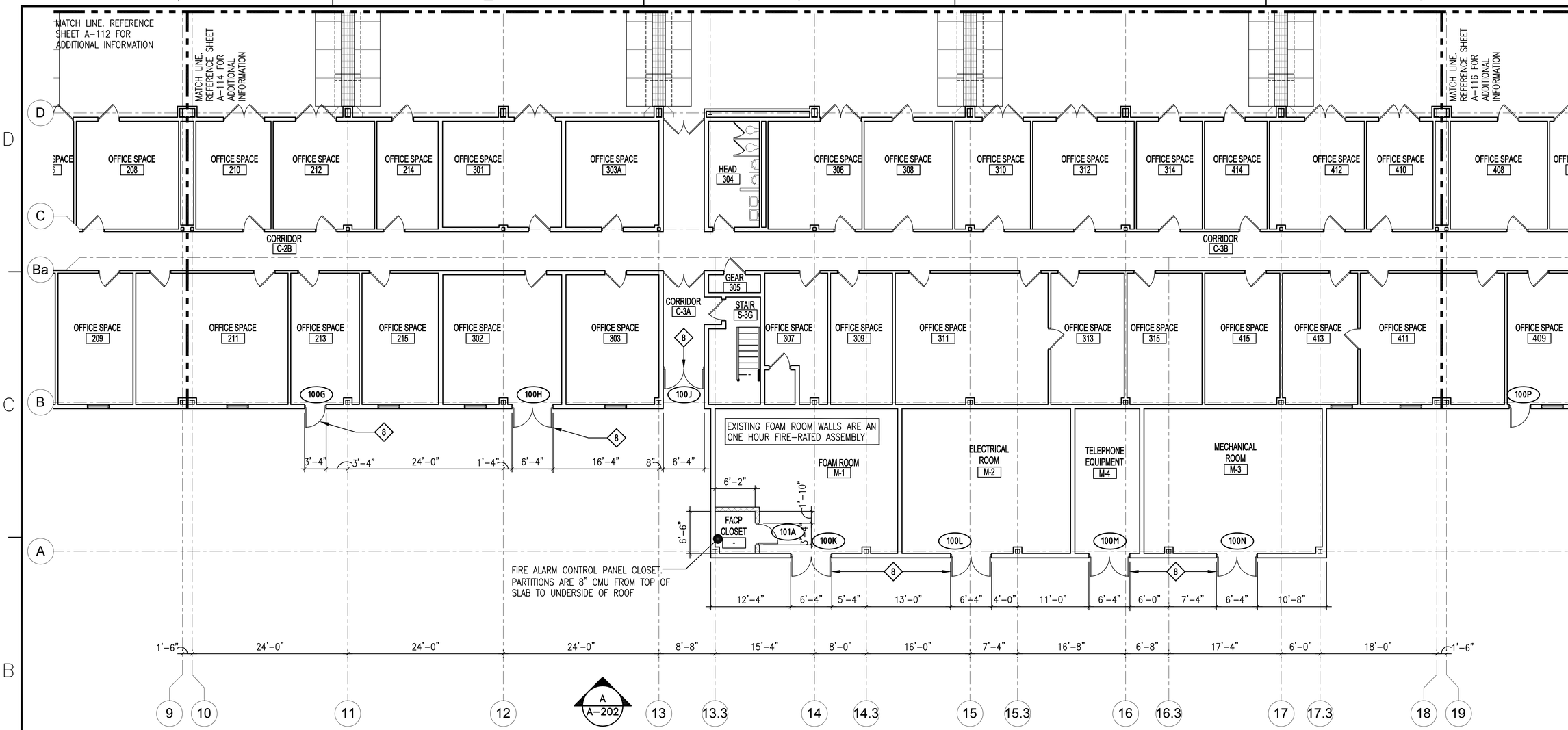

1 FIRST FLOOR PLAN - AREA E

SCALE: 1/8" = 1'-0"

GENERAL NOTE: REFERENCE SHEET A-601 FOR DOOR SCHEDULE

PROJECT NORTH

KEY NOTES

1. NOT USED.
2. NOT USED.
3. NOT USED.
4. NOT USED.
5. NOT USED.
6. NOT USED.
7. NOT USED.
8. EXISTING EXTERIOR PERSONNEL DOORS: EXISTING DOORS AND FRAMES TO REMAIN.
   BID OPTION: REMOVE EXISTING DOOR, DOOR FRAME AND DOOR HARDWARE COMPLETE. CLEAN, PATCH AND PREPARE EXISTING OPENING TO RECEIVE DOOR AND FRAME ASSEMBLY. REFERENCE ARCHITECTURAL FLOOR PLANS AND DOOR SCHEDULE FOR ADDITIONAL INFORMATION. REFERENCE ENVIRONMENT DOCUMENTS FOR ADDITIONAL INFORMATION AND DOOR / DOOR FRAME RECYCLING PROCEDURES.

CAUTION: IF THIS PLAN IS A REDUCTION, GRAPHIC SCALE MUST BE USED

0 4' 8' 12' 16'

⅛" = 1'-0

KEY PLAN

A	B	C
D	E	F

STM	DESCRIPTION	DATE	APPR
1	FINAL SUBMISSION	5/2/2016	

NAVFAC

COMMONWEALTH OF VIRGINIA
DARRYL R. TREVILLIAN
Lic. No. 7644
5-2-16
SEAL

the PROTECTION ENGINEERING GROUP
14585 Avion Parkway, Suite 150 Chantilly, Virginia 20151 tel: 703-488-9900 fax: 703-488-9994
www.PEGroup-Inc.com

Baskervill
101 S 18th St Ste 300 - 23219 Richmond, Va 804 648 1818 baskervill.com
A/E INFO

APPROVED 5/11/16
FOR COMMANDER NAVFAC
ACTIVITY
SATISFACTORY TO
DES JWT DRW DN CHK DRT
PM/DM KPL/IAS
BRANCH MANAGER
CHIEF ENG/ARCH Mark J. Airaghi, PE
FIRE PROTECTION DPS

DEPARTMENT OF THE NAVY
NAVAL FACILITIES ENGINEERING COMMAND
NAVAL FACILITIES ENGINEERING COMMAND ~ MID-ATLANTIC
HAMPTON ROADS IPT
NAVAL AIR STATION OCEANA
NAS OCEANA ~ VIRGINIA BEACH, VIRGINIA
VIRGINIA BEACH, VIRGINIA

HANGAR 111 FIRE PROTECTION AND STRUCTURAL REPAIRS

1st FLOOR PLAN - ARCHITECTURAL - AREA E

SCALE: AS SHOWN
EPROJECT NO.: 1372146
CONSTR. CONTR. NO.
NAVFAC DRAWING NO. 12716279
SHEET 57 OF 170

A-115

DRAWFORM REVISION: 10 MAY 2014

FILE NAME: J:\GHD\2-1503390 - Oceana Naval Air Station-R111 Hanger Mod\E_Drawings\Arch\1372146_A115 Floor Plan.dwg LAYOUT NAME: Plot Final PLOTTED: Thursday, April 14, 2016 - 2:44pm USER: dl2

1 FIRST FLOOR PLAN - AREA F

SCALE: 1/8" = 1'-0"

GENERAL NOTE: REFERENCE SHEET A-601 FOR DOOR SCHEDULE

PROJECT NORTH

KEY NOTES

1. NOT USED.
2. NOT USED.
3. NOT USED.
4. NOT USED.
5. NOT USED.
6. NOT USED.
7. NOT USED.
8. EXISTING EXTERIOR PERSONNEL DOORS: EXISTING DOORS AND FRAMES TO REMAIN.
   BID OPTION: REMOVE EXISTING DOOR, DOOR FRAME AND DOOR HARDWARE COMPLETE. CLEAN, PATCH AND PREPARE EXISTING OPENING TO RECEIVE DOOR AND FRAME ASSEMBLY. REFERENCE ARCHITECTURAL FLOOR PLANS AND DOOR SCHEDULE FOR ADDITIONAL INFORMATION. REFERENCE ENVIRONMENT DOCUMENTS FOR ADDITIONAL INFORMATION AND DOOR / DOOR FRAME RECYCLING PROCEDURES.

CAUTION: IF THIS PLAN IS A REDUCTION, GRAPHIC SCALE MUST BE USED

0 4' 8' 12' 16'

⅛" = 1'-0

KEY PLAN

A	B	C
D	E	F

SYM	DESCRIPTION	DATE	APPR
1	FINAL SUBMISSION	5/2/2016	

NAVFAC

COMMONWEALTH OF VIRGINIA
DARRYL R. TREVILLIAN
Lic. No. 7644
5/2/16
SEAL

the PROTECTION ENGINEERING GROUP
14585 Avion Parkway, Suite 150 703-488-9995
Chantilly, Virginia 20151 fax: 703-488-9994
www.PEGroup-Inc.com

Baskervill
101 S 18th St
Ste 300 • 23219
Richmond, Va
804 648 1818
baskervill.com
A/E INFO

APPROVED 5/1/16
FOR COMMANDER NAVFAC
ACTIVITY
SATISFACTORY TO
DES JWT DRW DN CHK DRT
PM/DM KPL/IAS
BRANCH MANAGER
CHIEF ENG/ARCH Mark J. Airaghi, PE
FIRE PROTECTION DPS

DEPARTMENT OF THE NAVY
NAVAL FACILITIES ENGINEERING COMMAND
NAVAL FACILITIES ENGINEERING COMMAND ~ MID-ATLANTIC
HAMPTON ROADS IPT
NAS OCEANA ~ VIRGINIA BEACH, VIRGINIA
NAVAL AIR STATION OCEANA
VIRGINIA BEACH, VIRGINIA

HANGAR 111 FIRE PROTECTION AND STRUCTURAL REPAIRS

1st FLOOR PLAN - ARCHITECTURAL - AREA F

SCALE: AS SHOWN
EPROJECT NO.: 1372146
CONSTR. CONTR. NO.
NAVFAC DRAWING NO. 12716280
SHEET 58 OF 170

A-116

DRAWFORM REVISION: 10 MAY 2014

FILE NAME: J:\GHD\2.1503390 - Oceana Naval Air Station-R111 Hanger Mod\E_Drawings\Arch\1372146_A116 Floor Plan.dwg LAYOUT NAME: Plot Final PLOTTED: Thursday, April 14, 2016 - 3:01pm USER: dtj2

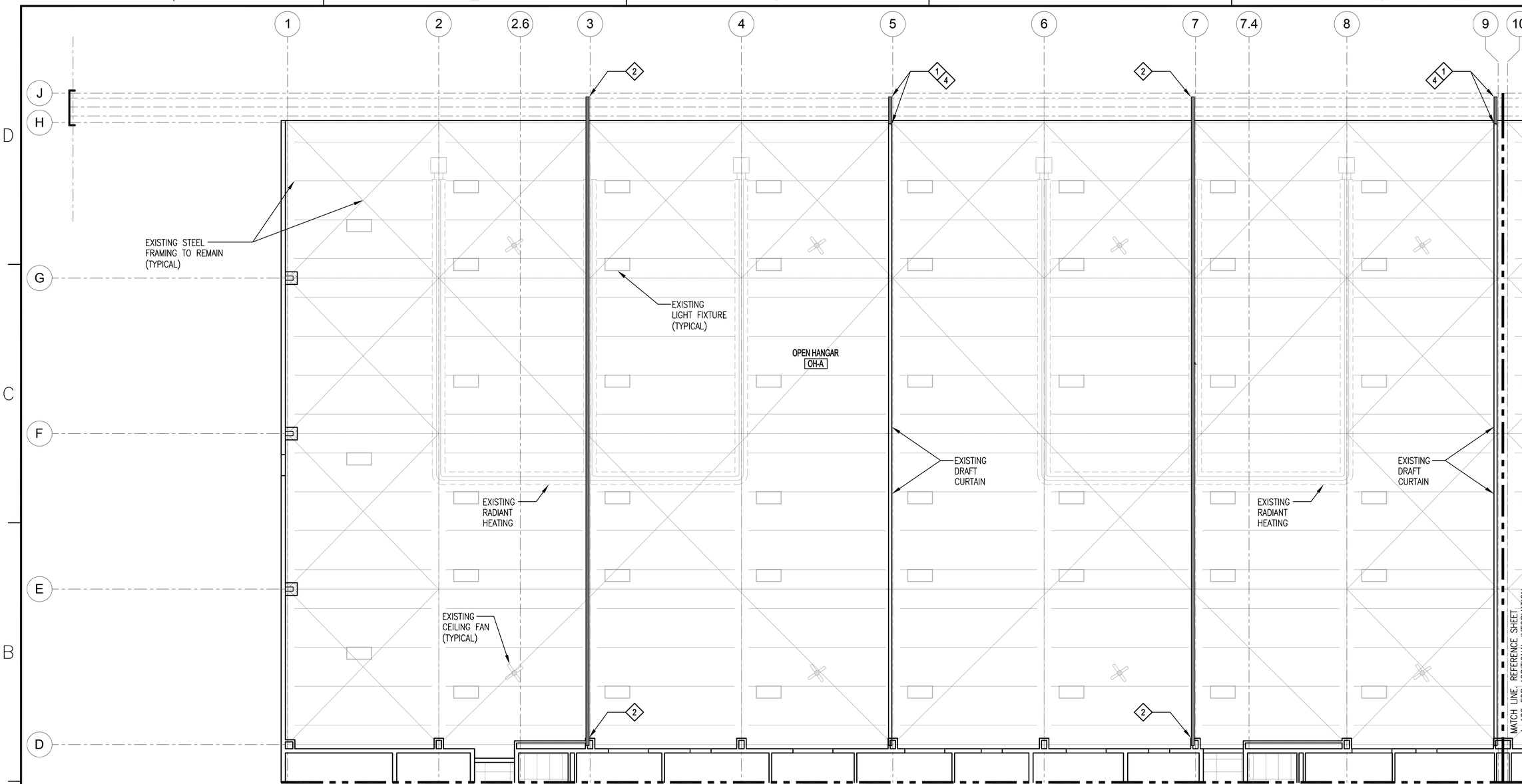

1 FIRST FLOOR REFLECTED CEILING PLAN - AREA A

SCALE: 1/8" = 1'-0"

PROJECT NORTH

KEY NOTES

1. CONSTRUCT DRAFT CURTAIN FROM COLUMN LINE 'H' TO EXTERIOR WALL BEYOND COLUMN LINE 'J'. DRAFT CURTAIN ASSEMBLY MUST MATCH EXISTING MATERIAL AND METAL PANEL PROFILE. DRAFT CURTAIN ATTACHMENT MUST MATCH EXISTING (5'-0" LONG x 10'-0" HIGH). REFERENCE DETAIL A ON SHEET A-302 FOR ADDITIONAL INFORMATION. REFERENCE ENVIRONMENT DOCUMENTS FOR ADDITIONAL INFORMATION, REMEDIATION AND PROCEDURES THAT ADDRESS REMOVAL OF HAZARDOUS MATERIAL (HEAVY METAL DUST) FROM AREA OF WORK AND HORIZONTAL LEDGES.
2. CONSTRUCT DRAFT CURTAIN ON (1) SIDE OF EXISTING ROOF FRAMING FROM COLUMN LINE 'D' TO EXTERIOR WALL BEYOND COLUMN LINE 'J'. DRAFT CURTAIN ASSEMBLY MUST MATCH EXISTING MATERIAL AND PROFILE. DRAFT CURTAIN ATTACHMENT MUST MATCH EXISTING (103'-0" LONG x 10'-0" HIGH). REFERENCE DETAIL A ON SHEET A-302 FOR ADDITIONAL INFORMATION. REFERENCE ENVIRONMENT DOCUMENTS FOR ADDITIONAL INFORMATION, REMEDIATION AND PROCEDURES THAT ADDRESS REMOVAL OF HAZARDOUS MATERIAL (HEAVY METAL DUST) FROM AREA OF WORK AND HORIZONTAL LEDGES.
3. NOT USED
4. PATCH AND REPAIR ABANDONED PIPE PENETRATIONS AT THE EXISTING DRAFT CURTAIN. METAL PANEL MUST MATCH THE EXISTING DRAFT CURTAIN AND PROVIDE A CONTINUOUS SEAL

CAUTION: IF THIS PLAN IS A REDUCTION, GRAPHIC SCALE MUST BE USED

0 4' 8' 12' 16'

⅛" = 1'-0

KEY PLAN

A	B	C
D	E	F

STM	DESCRIPTION	DATE	APPR
1	FINAL SUBMISSION	5/2/2016	

NAVFAC

COMMONWEALTH OF VIRGINIA
DARRYL R. TREVILLIAN
Lic. No. 7644
5-2-16
SEAL

the PROTECTION ENGINEERING GROUP
14585 Avion Parkway, Suite 150 Chantilly, Virginia 20151
703-488-9900 fax: 703-488-9994
www.PEGroup-Inc.com

Baskervill
101 S 18th St
Ste 200 - 23219
Richmond, Va
804 248 1010
baskervill.com
A/E INFO

APPROVED 5/2/16
FOR COMMANDER NAVFAC

ACTIVITY

SATISFACTORY TO

DES JWT DRW DN CHK DRT
PM/OM KPL/IAS
BRANCH MANAGER
CHIEF ENG/ARCH Mark J. Airaghi, PE
FIRE PROTECTION DPS

DEPARTMENT OF THE NAVY
NAVAL FACILITIES ENGINEERING COMMAND
NAVAL FACILITIES ENGINEERING COMMAND ~ MID-ATLANTIC
HAMPTON ROADS PPT
NAS OCEANA ~ VIRGINIA BEACH, VIRGINIA
NAVAL AIR STATION OCEANA
VIRGINIA BEACH, VIRGINIA
HANGAR 111 FIRE PROTECTION AND STRUCTURAL REPAIRS
1st FLOOR REFLECTIVE CEILING PLAN - AREA A

SCALE: AS SHOWN
EPROJECT NO.: 1372146
CONSTR. CONTR. NO.
NAVFAC DRAWING NO. 12716281
SHEET 59 OF 170
A-121

DRAWFORM REVISION: 10 MAY 2014

FILE NAME: J:\PHD\2-150339.0 - Oceana Naval Air Station-R111 Hanger Mod\E_Drawings\Arch\1372146_A121 Ceiling Plan.dwg LAYOUT NAME: Plot Final PLOTTED: Thursday, April 14, 2016 - 3:17pm USER: dtj2

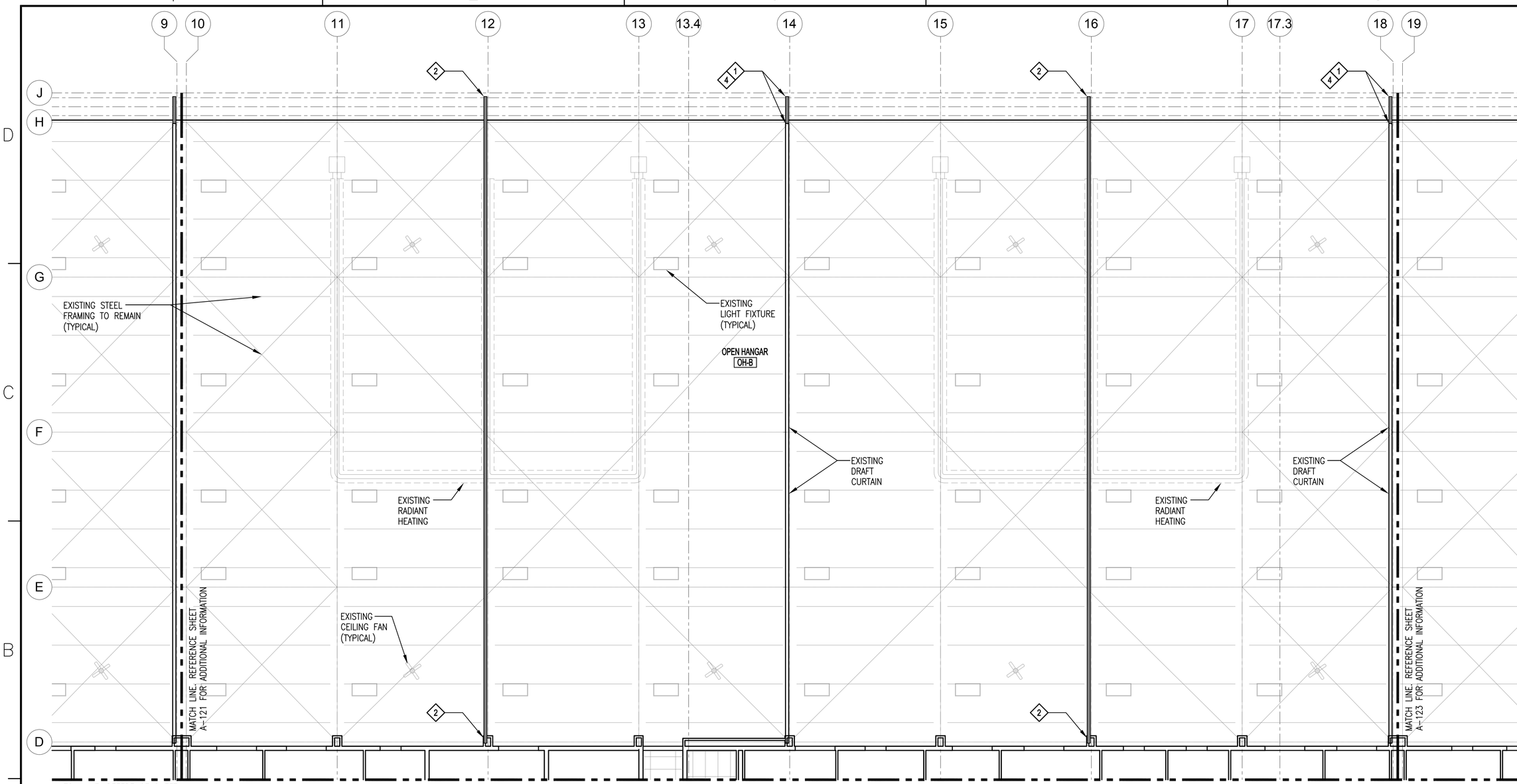

1 FIRST FLOOR REFLECTED CEILING PLAN - AREA B

SCALE: 1/8" = 1'-0"

PROJECT NORTH

KEY NOTES

1. CONSTRUCT DRAFT CURTAIN FROM COLUMN LINE 'H' TO EXTERIOR WALL BEYOND COLUMN LINE 'J'. DRAFT CURTAIN ASSEMBLY MUST MATCH EXISTING MATERIAL AND METAL PANEL PROFILE. DRAFT CURTAIN ATTACHMENT MUST MATCH EXISTING (5'-0" LONG x 10'-0" HIGH). REFERENCE DETAIL A ON SHEET A-302 FOR ADDITIONAL INFORMATION. REFERENCE ENVIRONMENT DOCUMENTS FOR ADDITIONAL INFORMATION, REMEDIATION AND PROCEDURES THAT ADDRESS REMOVAL OF HAZARDOUS MATERIAL (HEAVY METAL DUST) FROM AREA OF WORK AND HORIZONTAL LEDGES.
2. CONSTRUCT DRAFT CURTAIN ON (1) SIDE OF EXISTING ROOF FRAMING FROM COLUMN LINE 'D' TO EXTERIOR WALL BEYOND COLUMN LINE 'J'. DRAFT CURTAIN ASSEMBLY MUST MATCH EXISTING MATERIAL AND PROFILE. DRAFT CURTAIN ATTACHMENT MUST MATCH EXISTING (103'-0" LONG x 10'-0" HIGH). REFERENCE DETAIL A ON SHEET A-302 FOR ADDITIONAL INFORMATION. REFERENCE ENVIRONMENT DOCUMENTS FOR ADDITIONAL INFORMATION, REMEDIATION AND PROCEDURES THAT ADDRESS REMOVAL OF HAZARDOUS MATERIAL (HEAVY METAL DUST) FROM AREA OF WORK AND HORIZONTAL LEDGES.
3. NOT USED
4. PATCH AND REPAIR ABANDONED PIPE PENETRATIONS AT THE EXISTING DRAFT CURTAIN. METAL PANEL MUST MATCH THE EXISTING DRAFT CURTAIN AND PROVIDE A CONTINUOUS SEAL

CAUTION: IF THIS PLAN IS A REDUCTION, GRAPHIC SCALE MUST BE USED

0 4' 8' 12' 16'

⅛" = 1'-0

KEY PLAN

A	B	C
D	E	F

SYM	DESCRIPTION	DATE	APPR
1	FINAL SUBMISSION	5/2/2016	

NAVFAC

COMMONWEALTH OF VIRGINIA
DARRYL R. TREVILLIAN
Lic. No. 7644
5-2-16
SEAL

the PROTECTION ENGINEERING GROUP
14585 Avion Parkway, Suite 150 Chantilly, Virginia 20151
703-488-9995 fax: 703-488-9994
www.PEGroup-Inc.com

Baskervill
101 S 18th St
Ste 200 - 23219
Richmond, Va
804 648 1818
baskervill.com
A/E INFO

APPROVED 5/10/16
FOR COMMANDER NAVFAC
ACTIVITY
SATISFACTORY TO

DES JWT DRW DN CHK DRT
PM/DM KPL/IAS
BRANCH MANAGER
CHIEF ENG/ARCH Mark J. Airaghi, PE
FIRE PROTECTION DPS

DEPARTMENT OF THE NAVY
NAVAL FACILITIES ENGINEERING COMMAND
HAMPTON ROADS PPT
NAVAL FACILITIES ENGINEERING COMMAND ~ MID-ATLANTIC
NAS OCEANA - VIRGINIA BEACH, VIRGINIA
NAVAL AIR STATION OCEANA
VIRGINIA BEACH, VIRGINIA
HANGAR 111 FIRE PROTECTION AND STRUCTURAL REPAIRS
1st FLOOR REFLECTIVE CEILING PLAN - AREA B

SCALE: AS SHOWN
EPROJECT NO.: 1372146
CONSTR. CONTR. NO.
NAVFAC DRAWING NO. 12716282
SHEET 60 OF 170
A-122

DRAWFORM REVISION: 10 MAY 2014

FILE NAME: J:\GHD\2.1503390 - Oceana Naval Air Station-R111 Hanger Mod\E_Drawings\Arch\1372146_A122 Ceiling Plan.dwg LAYOUT NAME: Plot Final PLOTTED: Thursday, April 14, 2016 - 3:17pm USER: dtj2

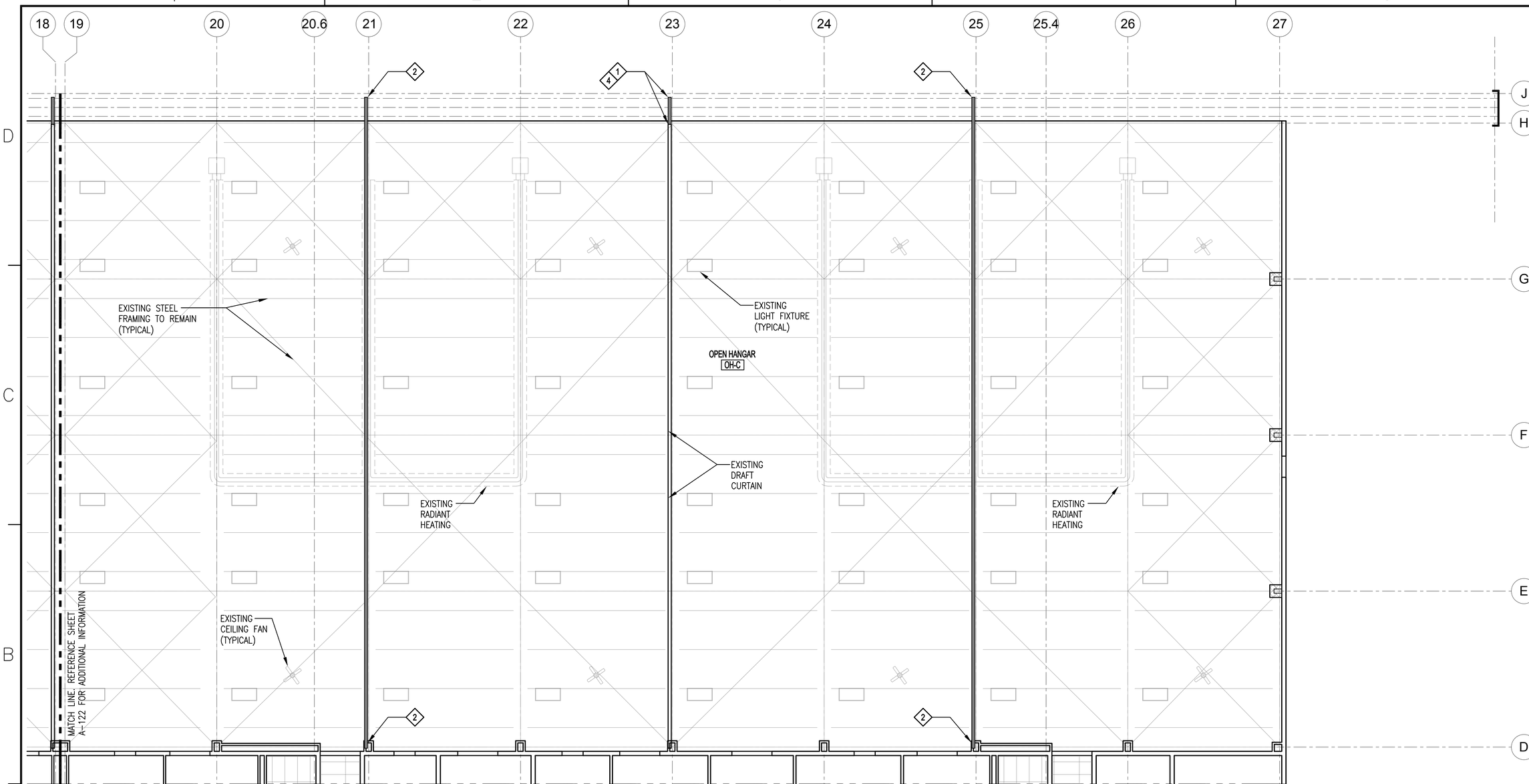

MATCH LINE. REFERENCE SHEET
A-126 FOR ADDITIONAL INFORMATION

1 FIRST FLOOR REFLECTED CEILING PLAN - AREA C

SCALE: 1/8" = 1'-0"

PROJECT NORTH

KEY NOTES

1. CONSTRUCT DRAFT CURTAIN FROM COLUMN LINE 'H' TO EXTERIOR WALL BEYOND COLUMN LINE 'J'. DRAFT CURTAIN ASSEMBLY MUST MATCH EXISTING MATERIAL AND METAL PANEL PROFILE. DRAFT CURTAIN ATTACHMENT MUST MATCH EXISTING (5'-0" LONG x 10'-0" HIGH). REFERENCE DETAIL A ON SHEET A-302 FOR ADDITIONAL INFORMATION. REFERENCE ENVIRONMENT DOCUMENTS FOR ADDITIONAL INFORMATION, REMEDIATION AND PROCEDURES THAT ADDRESS REMOVAL OF HAZARDOUS MATERIAL (HEAVY METAL DUST) FROM AREA OF WORK AND HORIZONTAL LEDGES.
2. CONSTRUCT DRAFT CURTAIN ON (1) SIDE OF EXISTING ROOF FRAMING FROM COLUMN LINE 'D' TO EXTERIOR WALL BEYOND COLUMN LINE 'J'. DRAFT CURTAIN ASSEMBLY MUST MATCH EXISTING MATERIAL AND PROFILE. DRAFT CURTAIN ATTACHMENT MUST MATCH EXISTING (103'-0" LONG x 10'-0" HIGH). REFERENCE DETAIL A ON SHEET A-302 FOR ADDITIONAL INFORMATION. REFERENCE ENVIRONMENT DOCUMENTS FOR ADDITIONAL INFORMATION, REMEDIATION AND PROCEDURES THAT ADDRESS REMOVAL OF HAZARDOUS MATERIAL (HEAVY METAL DUST) FROM AREA OF WORK AND HORIZONTAL LEDGES.
3. NOT USED
4. PATCH AND REPAIR ABANDONED PIPE PENETRATIONS AT THE EXISTING DRAFT CURTAIN. METAL PANEL MUST MATCH THE EXISTING DRAFT CURTAIN AND PROVIDE A CONTINUOUS SEAL

CAUTION: IF THIS PLAN IS A REDUCTION, GRAPHIC SCALE MUST BE USED

0 4' 8' 12' 16'
⅛" = 1'-0

KEY PLAN

A	B	C
D	E	F

SYM	DESCRIPTION	DATE	APPR
1	FINAL SUBMISSION	5/2/2016	

NAVFAC

COMMONWEALTH OF VIRGINIA
DARRYL R. TREVILLIAN
Lic. No. 7644
5-2-16
SEAL

the PROTECTION ENGINEERING GROUP
14585 Avion Parkway, Suite 150 703-488-9900
Chantilly, Virginia 20151 fax: 703-488-9994
www.PEGroup-Inc.com

Baskervill
101 S 18th St
Ste 200 - 23219
Richmond, Va
804 648 1818
baskervill.com
A/E INFO

APPROVED 5/10/16
FOR COMMANDER NAVFAC
ACTIVITY
SATISFACTORY TO
DES JWT DRW DN CHK DRT
PM/DM KPL/IAS
BRANCH MANAGER
CHIEF ENG/ARCH Mark J. Airaghi, PE
FIRE PROTECTION DPS

NAVAL FACILITIES ENGINEERING COMMAND
DEPARTMENT OF THE NAVY
NAVAL FACILITIES ENGINEERING COMMAND ~ MID-ATLANTIC
NAS OCEANA - VIRGINIA BEACH, VIRGINIA
HAMPTON ROADS PPT
NAVAL AIR STATION OCEANA
VIRGINIA BEACH, VIRGINIA
HANGAR 111 FIRE PROTECTION AND STRUCTURAL REPAIRS
1st FLOOR REFLECTIVE CEILING PLAN - AREA C

SCALE: AS SHOWN
EPROJECT NO.: 1372146
CONSTR. CONTR. NO.
NAVFAC DRAWING NO. 12716283
SHEET 61 OF 170
A-123

DRAWFORM REVISION: 10 MAY 2014

FILE NAME: J:\GHD\2.1503390 - Oceana Naval Air Station-R111 Hanger Mod\E_Drawings\Arch\1372146_A123 Ceiling Plan.dwg LAYOUT NAME: Plot Final PLOTTED: Thursday, April 14, 2016 - 3:16pm USER: dtl2

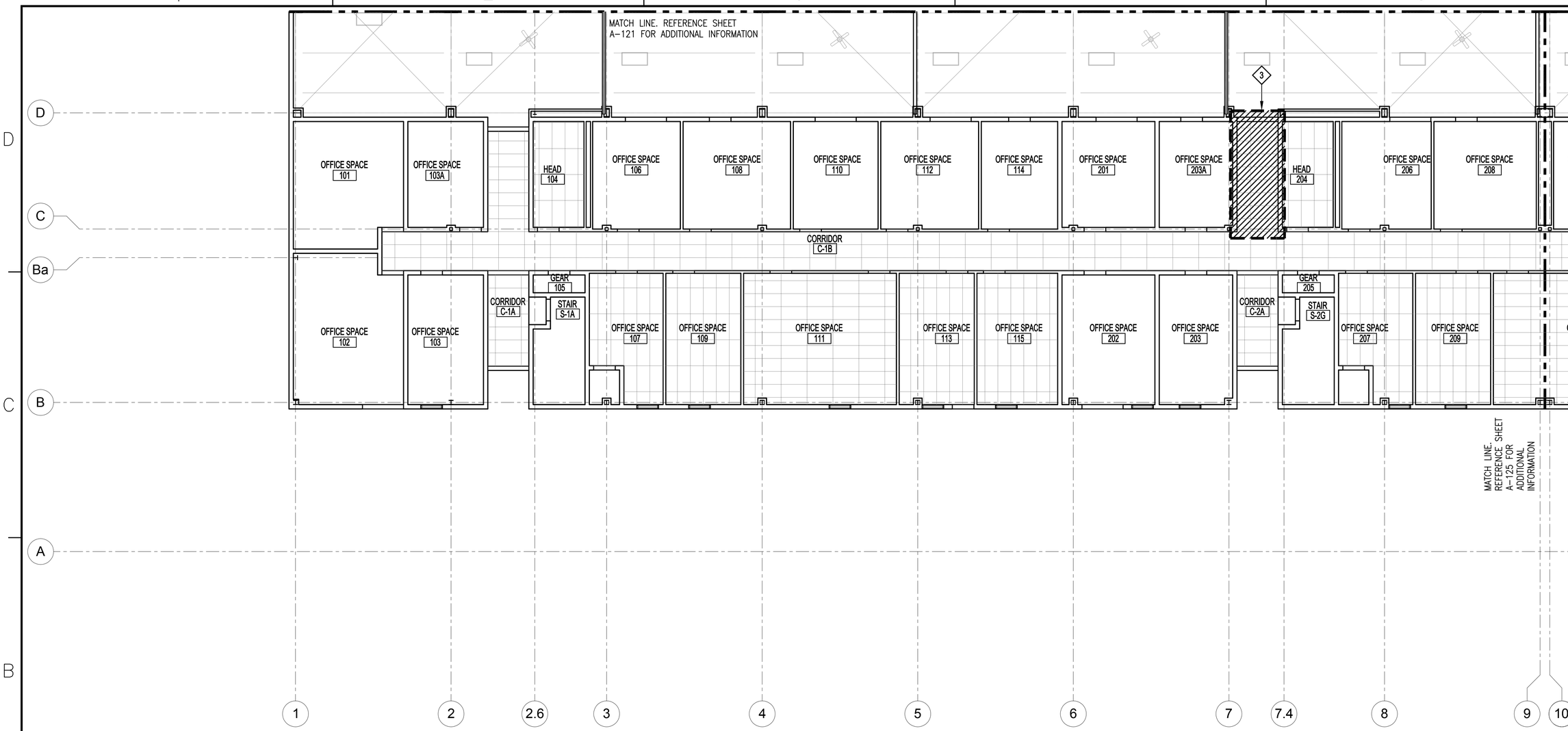

AREA OF WORK

1 FIRST FLOOR REFLECTED CEILING PLAN - AREA D

SCALE: 1/8" = 1'-0"

PROJECT NORTH

KEY NOTES

1. NOT USED
2. NOT USED
3. REMOVE EXISTING CEILING GRID AND SUSPENSION SYSTEM COMPLETE TO ALLOW ACCESS FOR FIRE PROTECTION WORK. SALVAGE ASSOCIATED MECHANICAL AND ELECTRICAL FIXTURES FOR REUSE. UPON COMPLETION OF ABOVE CEILING WORK, PROVIDE CEILING SUSPENSION SYSTEM AND CEILING TILES TO MATCH EXISTING IN HEIGHT, COLOR, SIZE AND STYLE. RE-INSTALL MECHANICAL AND ELECTRICAL FIXTURES AT SAME LOCATIONS

CAUTION: IF THIS PLAN IS A REDUCTION, GRAPHIC SCALE MUST BE USED

0 4' 8' 12' 16'

⅛" = 1'-0"

KEY PLAN

A	B	C
D	E	F

STM	DESCRIPTION	DATE	APPR
1	FINAL SUBMISSION	5/2/2016	

NAVFAC

COMMONWEALTH OF VIRGINIA
DARRYL R. TREVILLIAN
Lic. No. 7644
5-2-16
SEAL

the PROTECTION ENGINEERING GROUP
14585 Avion Parkway, Suite 150 703-488-9995
Chantilly, Virginia 20151 fax: 703-488-9994
www.PEGroup-Inc.com

Baskervill
101 S 18th St
Ste 200 - 23219
Richmond, Va
804 648 1010
baskervill.com
A/E INFO

APPROVED 5/2/16
FOR COMMANDER NAVFAC
ACTIVITY
SATISFACTORY TO
DES JMT DRW DN CHK DRT
PM/DM KPL/IAS
BRANCH MANAGER
CHIEF ENG/ARCH Mark J. Airaghi, PE
FIRE PROTECTION DPS

DEPARTMENT OF THE NAVY
NAVAL FACILITIES ENGINEERING COMMAND
NAVAL FACILITIES ENGINEERING COMMAND ~ MID-ATLANTIC
HAMPTON ROADS IPT
NAS OCEANA - VIRGINIA BEACH, VIRGINIA
NAVAL AIR STATION OCEANA
VIRGINIA BEACH, VIRGINIA

HANGAR 111 FIRE PROTECTION AND STRUCTURAL REPAIRS

1st FLOOR REFLECTIVE CEILING PLAN - AREA D

SCALE: AS SHOWN
EPROJECT NO.: 1372146
CONSTR. CONTR. NO.
NAVFAC DRAWING NO. 12716284
SHEET 62 OF 170

A-124

DRAWFORM REVISION: 10 MAY 2014

FILE NAME: J:\GHD\2.1503390 - Oceana Naval Air Station-R111 Hanger Mod\E_Drawings\Arch\1372146_A124 Ceiling Plan.dwg LAYOUT NAME: Plot Final PLOTTED: Thursday, April 14, 2016 - 3:16pm USER: dtl2

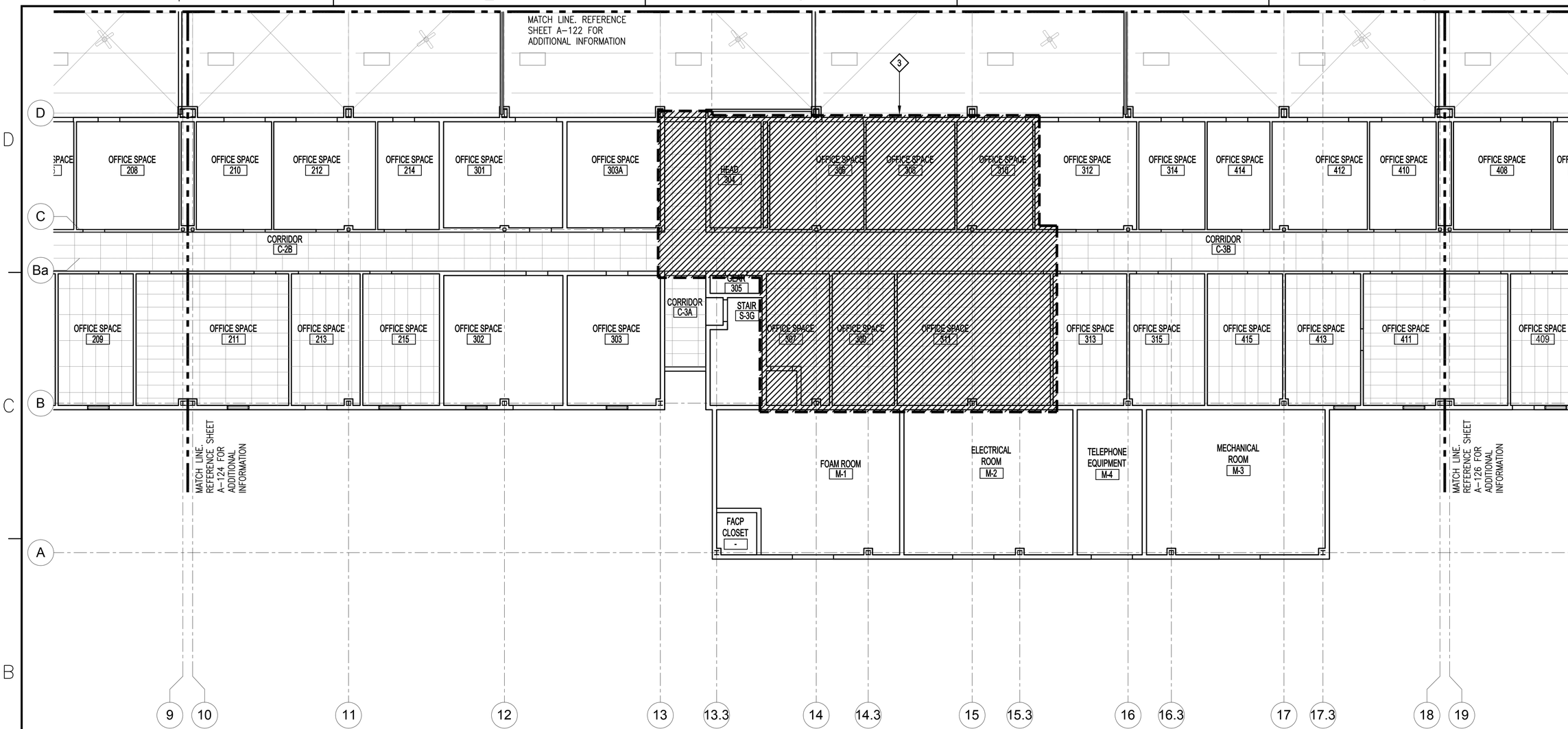

1 FIRST FLOOR REFLECTED CEILING PLAN - AREA E

SCALE: 1/8" = 1'-0"

PROJECT NORTH

KEY NOTES

1. NOT USED
2. NOT USED
3. REMOVE EXISTING CEILING GRID AND SUSPENSION SYSTEM COMPLETE TO ALLOW ACCESS FOR FIRE PROTECTION WORK. SALVAGE ASSOCIATED MECHANICAL AND ELECTRICAL FIXTURES FOR REUSE. UPON COMPLETION OF ABOVE CEILING WORK, PROVIDE CEILING SUSPENSION SYSTEM AND CEILING TILES TO MATCH EXISTING IN HEIGHT, COLOR, SIZE AND STYLE. RE-INSTALL MECHANICAL AND ELECTRICAL FIXTURES AT SAME LOCATIONS

CAUTION: IF THIS PLAN IS A REDUCTION, GRAPHIC SCALE MUST BE USED

0 4' 8' 12' 16'

⅛" = 1'-0

KEY PLAN

A	B	C
D	E	F

SYM	DESCRIPTION	DATE	APPR
1	FINAL SUBMISSION	5/2/2016	

NAVFAC

COMMONWEALTH OF VIRGINIA
DARRYL R. TREVILLIAN
Lic. No. 7644
5-2-16
SEAL

the PROTECTION ENGINEERING GROUP
14585 Avion Parkway, Suite 150 703-488-9990
Chantilly, Virginia 20151 fax: 703-488-9994
www.PEGroup-Inc.com

Baskervill
101 S 18th St
Ste 300 - 23219
Richmond, Va
804 648 1910
baskervill.com
A/E INFO

APPROVED 5/10/16
FOR COMMANDER NAVFAC
ACTIVITY
SATISFACTORY TO
DES JWT DRW DN CHK DRT
PM/DM KPL/IAS
BRANCH MANAGER
CHIEF ENG/ARCH Mark J. Airaghi, PE
FIRE PROTECTION DPS

DEPARTMENT OF THE NAVY
NAVAL FACILITIES ENGINEERING COMMAND
NAVAL FACILITIES ENGINEERING COMMAND ~ MID-ATLANTIC
HAMPTON ROADS IPT
NAS OCEANA - VIRGINIA BEACH, VIRGINIA
NAVAL AIR STATION OCEANA
VIRGINIA BEACH, VIRGINIA
HANGAR 111 FIRE PROTECTION AND STRUCTURAL REPAIRS
1st FLOOR REFLECTIVE CEILING PLAN - AREA E

SCALE: AS SHOWN
EPROJECT NO.: 1372146
CONSTR. CONTR. NO.
NAVFAC DRAWING NO. 12716285
SHEET 63 OF 170
A-125

DRAWFORM REVISION: 10 MAY 2014

FILE NAME: J:\GHD\2.150339.0 - Oceana Naval Air Station-R111 Hanger Mod\E_Drawings\Arch\1372146_A125 Ceiling Plan.dwg LAYOUT NAME: Plot Final PLOTTED: Thursday, April 14, 2016 - 3:16pm USER: dtl2

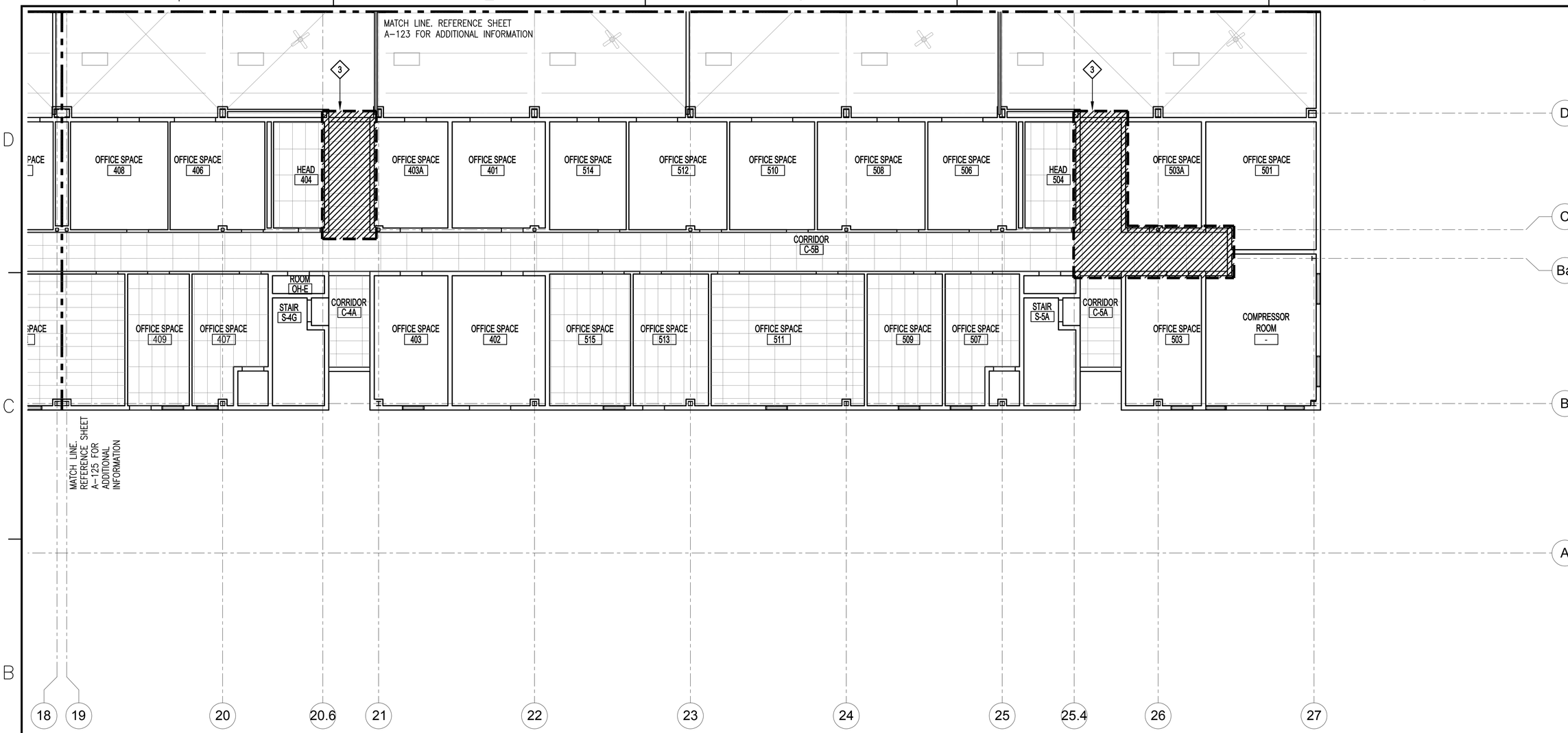

1 FIRST FLOOR REFLECTED CEILING PLAN - AREA F

SCALE: 1/8" = 1'-0"

PROJECT NORTH

KEY NOTES

1. NOT USED
2. NOT USED
3. REMOVE EXISTING CEILING GRID AND SUSPENSION SYSTEM COMPLETE TO ALLOW ACCESS FOR FIRE PROTECTION WORK. SALVAGE ASSOCIATED MECHANICAL AND ELECTRICAL FIXTURES FOR REUSE. UPON COMPLETION OF ABOVE CEILING WORK, PROVIDE CEILING SUSPENSION SYSTEM AND CEILING TILES TO MATCH EXISTING IN HEIGHT, COLOR, SIZE AND STYLE. RE-INSTALL MECHANICAL AND ELECTRICAL FIXTURES AT SAME LOCATIONS

CAUTION: IF THIS PLAN IS A REDUCTION, GRAPHIC SCALE MUST BE USED

0 4' 8' 12' 16'

⅛" = 1'-0

KEY PLAN

A	B	C
D	E	F

SYM	DESCRIPTION	DATE	APPR
1	FINAL SUBMISSION	5/2/2016	

NAVFAC

COMMONWEALTH OF VIRGINIA
DARRYL R. TREVILLIAN
Lic. No. 7644
5-2-16
SEAL

the PROTECTION ENGINEERING GROUP
14585 Avion Parkway, Suite 150 703-488-9900
Chantilly, Virginia 20151 fax: 703-488-9994
www.PEGroup-Inc.com

Baskervill
101 S 18th St
Ste 300 - 23219
Richmond, Va
804 343 1010
baskervill.com
A/E INFO

APPROVED 5/11/16
FOR COMMANDER NAVFAC

ACTIVITY

SATISFACTORY TO

DES JMT DRW DN CHK DRT
PM/DM KPL/IAS
BRANCH MANAGER
CHIEF ENG/ARCH Mark J. Airaghi, PE
FIRE PROTECTION DPS

DEPARTMENT OF THE NAVY
NAVAL FACILITIES ENGINEERING COMMAND
NAVAL FACILITIES ENGINEERING COMMAND ~ MID-ATLANTIC
NAS OCEANA - VIRGINIA BEACH, VIRGINIA
HAMPTON ROADS IPT
NAVAL AIR STATION OCEANA
VIRGINIA BEACH, VIRGINIA
HANGAR 111 FIRE PROTECTION AND STRUCTURAL REPAIRS
1st FLOOR REFLECTIVE CEILING PLAN - AREA F

SCALE: AS SHOWN
EPROJECT NO.: 1372146
CONSTR. CONTR. NO.
NAVFAC DRAWING NO. 12716286
SHEET 64 OF 170
A-126

DRAWFORM REVISION: 10 MAY 2014

FILE NAME: J:\GHD\2.1503390 - Oceana Naval Air Station-R111 Hanger Mod\E_Drawings\Arch\1372146_A126 Ceiling Plan.dwg LAYOUT NAME: Plot Final PLOTTED: Thursday, April 14, 2016 - 3:15pm USER: dtl2

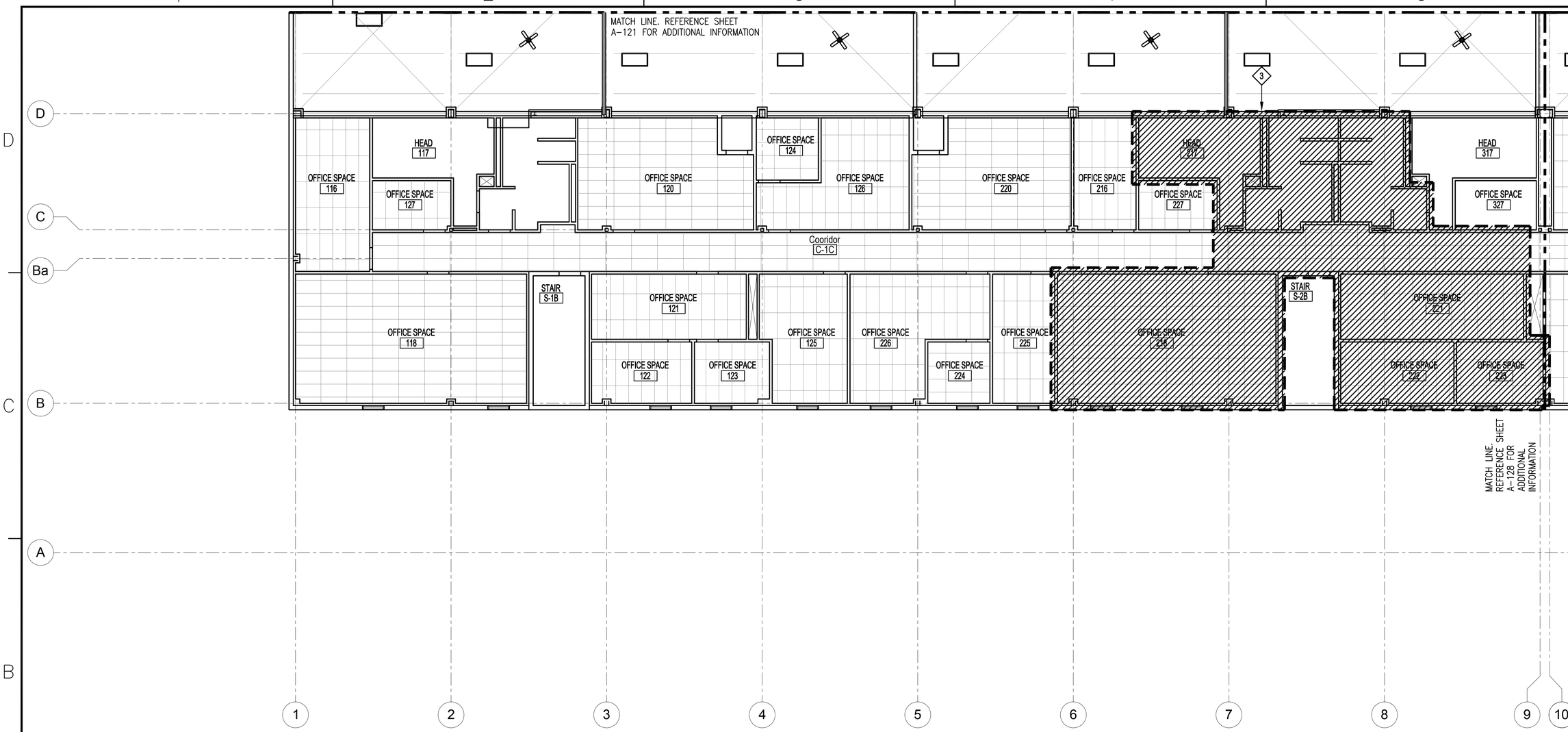

AREA OF WORK

1 SECOND FLOOR REFLECTED CEILING PLAN - AREA D

SCALE: 1/8" = 1'-0"

PROJECT NORTH

KEY NOTES

1. NOT USED
2. NOT USED
3. REMOVE EXISTING CEILING GRID AND SUSPENSION SYSTEM COMPLETE TO ALLOW ACCESS FOR MECHANICAL AND ELECTRICAL WORK. SALVAGE ASSOCIATED MECHANICAL AND ELECTRICAL FIXTURES FOR REUSE. UPON COMPLETION OF ABOVE CEILING WORK, PROVIDE CEILING SUSPENSION SYSTEM AND CEILING TILES TO MATCH EXISTING IN HEIGHT, COLOR, SIZE AND STYLE. RE-INSTALL MECHANICAL AND ELECTRICAL FIXTURES AT SAME LOCATIONS

CAUTION: IF THIS PLAN IS A REDUCTION, GRAPHIC SCALE MUST BE USED

0 4' 8' 12' 16'

⅛" = 1'-0

KEY PLAN

A	B	C
D	E	F

SYM	DESCRIPTION	DATE	APPR
1	FINAL SUBMISSION	5/2/2016	

NAVFAC

COMMONWEALTH OF VIRGINIA
DARRYL R. TREVILLIAN
Lic. No. 7644
5-2-16
SEAL

the PROTECTION ENGINEERING GROUP
14585 Avion Parkway, Suite 150 703-488-9995
Chantilly, Virginia 20151 fax: 703-488-9994
www.PEGroup-Inc.com

Baskervill
101 S 18th St
Ste 300 - 23219
Richmond, Va
804 648 1010
baskervill.com
A/E INFO

APPROVED 5/10/16
FOR COMMANDER NAVFAC
ACTIVITY
SATISFACTORY TO
DES JMT DRW DN CHK DRT
PM/DM KPL/IAS
BRANCH MANAGER
CHIEF ENG/ARCH Mark J. Airaghi, PE
FIRE PROTECTION DPS

DEPARTMENT OF THE NAVY
NAVAL FACILITIES ENGINEERING COMMAND
NAVAL FACILITIES ENGINEERING COMMAND ~ MID-ATLANTIC
NAS OCEANA - VIRGINIA BEACH, VIRGINIA
HAMPTON ROADS IPT
NAVAL AIR STATION OCEANA
VIRGINIA BEACH, VIRGINIA
HANGAR 111 FIRE PROTECTION AND STRUCTURAL REPAIRS
2nd FLOOR REFLECTIVE CEILING PLAN - AREA D

SCALE: AS SHOWN
EPROJECT NO.: 1372146
CONSTR. CONTR. NO.
NAVFAC DRAWING NO. 12716287
SHEET 65 OF 170
A-127

DRAWFORM REVISION: 10 MAY 2014

FILE NAME: J:\GHD\2.1503390 - Oceana Naval Air Station-R111 Hanger Mod\E_Drawings\Arch\1372146_A127 Ceiling Plan.dwg LAYOUT NAME: Plot Final PLOTTED: Thursday, April 14, 2016 - 3:15pm USER: dtl2

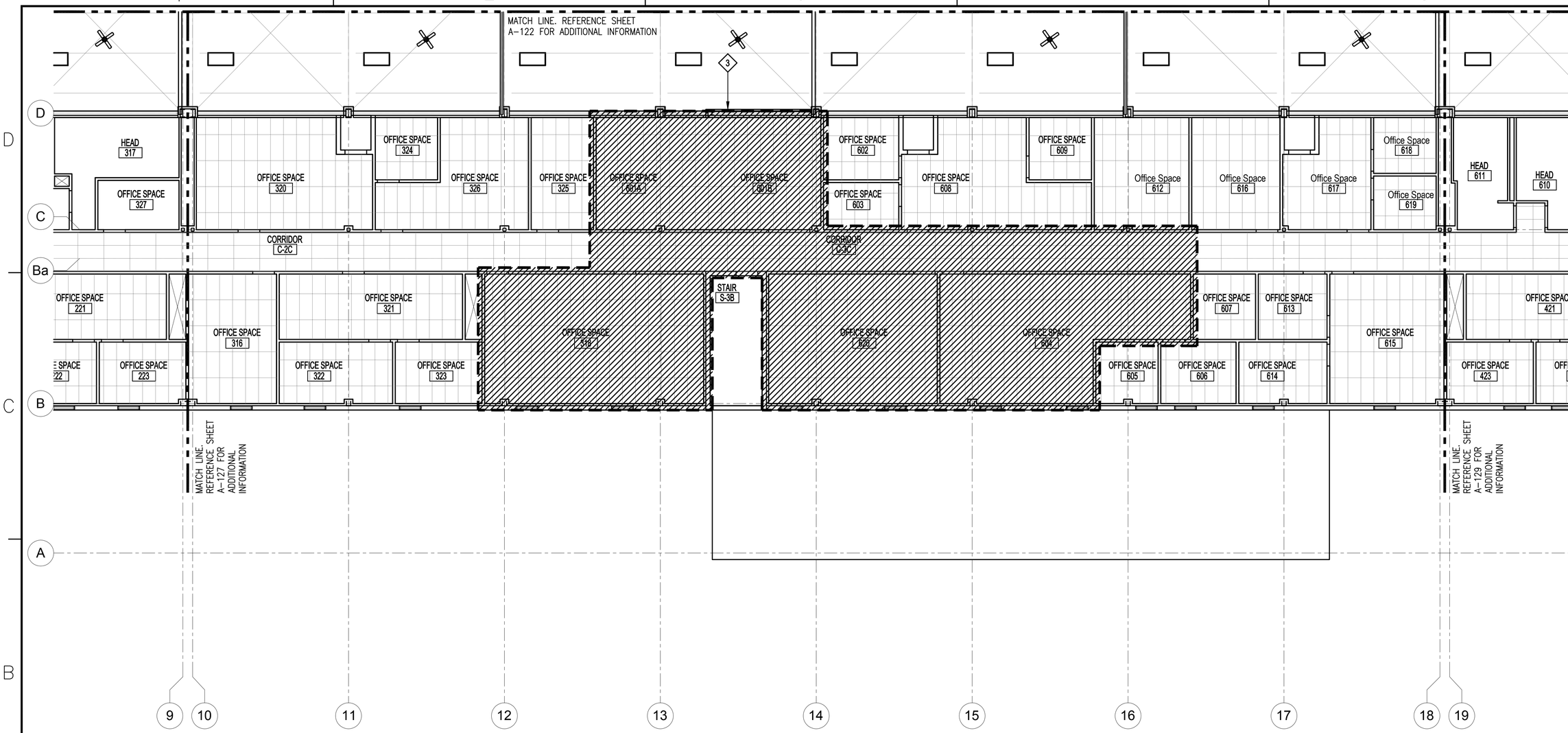

1 SECOND FLOOR REFLECTED CEILING PLAN - AREA E

SCALE: 1/8" = 1'-0"

PROJECT NORTH

KEY NOTES

1. NOT USED
2. NOT USED
3. REMOVE EXISTING CEILING GRID AND SUSPENSION SYSTEM COMPLETE TO ALLOW ACCESS FOR MECHANICAL AND ELECTRICAL WORK. SALVAGE ASSOCIATED MECHANICAL AND ELECTRICAL FIXTURES FOR REUSE. UPON COMPLETION OF ABOVE CEILING WORK, PROVIDE CEILING SUSPENSION SYSTEM AND CEILING TILES TO MATCH EXISTING IN HEIGHT, COLOR, SIZE AND STYLE. RE-INSTALL MECHANICAL AND ELECTRICAL FIXTURES AT SAME LOCATIONS

CAUTION: IF THIS PLAN IS A REDUCTION, GRAPHIC SCALE MUST BE USED

0 4' 8' 12' 16'

⅛" = 1'-0

KEY PLAN

A	B	C
D	E	F

SYM	DESCRIPTION	DATE	APPR
1	FINAL SUBMISSION	5/2/2016	

NAVFAC

COMMONWEALTH OF VIRGINIA
DARRYL R. TREVILLIAN
Lic. No. 7644
5-2-16
SEAL

the PROTECTION ENGINEERING GROUP
14585 Avion Parkway, Suite 150 703-488-9990
Chantilly, Virginia 20151 fax: 703-488-9994
www.PEGroup-Inc.com

Baskervill
101 S 18th St
Ste 300 - 23219
Richmond, Va
804 648 1910
baskervill.com
A/E INFO

APPROVED 5/10/16
FOR COMMANDER NAVFAC

ACTIVITY

SATISFACTORY TO

DES JWT DRW DN CHK DRT
PM/DM KPL/IAS
BRANCH MANAGER
CHIEF ENG/ARCH Mark J. Airaghi, PE
FIRE PROTECTION DPS

DEPARTMENT OF THE NAVY
NAVAL FACILITIES ENGINEERING COMMAND ~ MID-ATLANTIC
HAMPTON ROADS IPT
NAVAL FACILITIES ENGINEERING COMMAND
NAS OCEANA – VIRGINIA BEACH, VIRGINIA
NAVAL AIR STATION OCEANA
VIRGINIA BEACH, VIRGINIA

HANGAR 111 FIRE PROTECTION AND STRUCTURAL REPAIRS

2nd FLOOR REFLECTIVE CEILING PLAN - AREA E

SCALE: AS SHOWN
EPROJECT NO.: 1372146
CONSTR. CONTR. NO.
NAVFAC DRAWING NO. 12716288
SHEET 66 OF 170

A-128

DRAWFORM REVISION: 10 MAY 2014

FILE NAME: J:\GHD\2150339.0 - Oceana Naval Air Station-R111 Hanger Mod\E_Drawings\Arch\1372146_A128 Ceiling Plan.dwg LAYOUT NAME: Plot Final PLOTTED: Thursday, April 14, 2016 - 3:14pm USER: dtl2

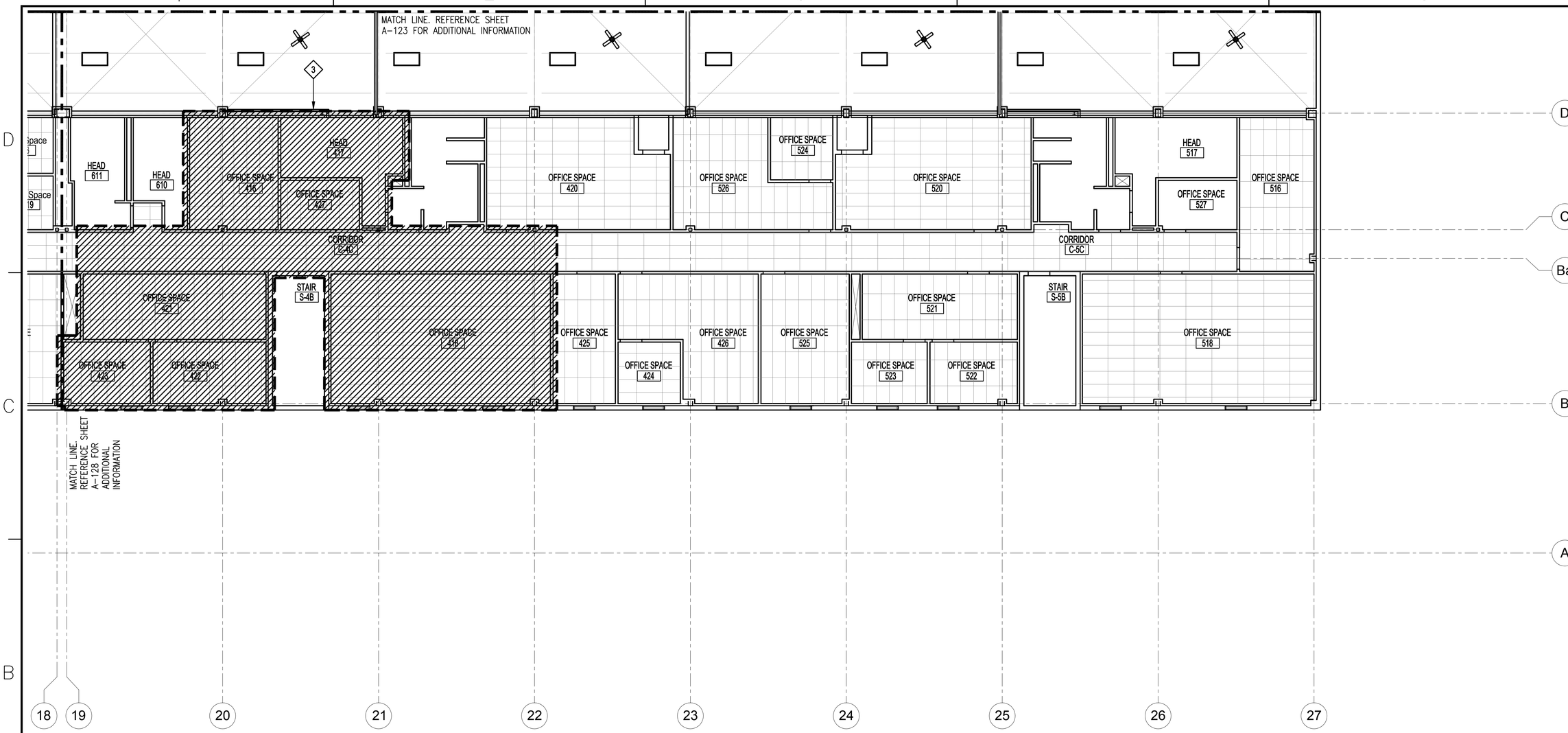

1 SECOND FLOOR REFLECTED CEILING PLAN - AREA F

SCALE: 1/8" = 1'-0"

PROJECT NORTH

KEY NOTES

1. NOT USED
2. NOT USED
3. REMOVE EXISTING CEILING GRID AND SUSPENSION SYSTEM COMPLETE TO ALLOW ACCESS FOR MECHANICAL AND ELECTRICAL WORK. SALVAGE ASSOCIATED MECHANICAL AND ELECTRICAL FIXTURES FOR REUSE. UPON COMPLETION OF ABOVE CEILING WORK, PROVIDE CEILING SUSPENSION SYSTEM AND CEILING TILES TO MATCH EXISTING IN HEIGHT, COLOR, SIZE AND STYLE. RE-INSTALL MECHANICAL AND ELECTRICAL FIXTURES AT SAME LOCATIONS

CAUTION: IF THIS PLAN IS A REDUCTION, GRAPHIC SCALE MUST BE USED

0 4' 8' 12' 16'

⅛" = 1'-0

KEY PLAN

A	B	C
D	E	F

SYM	DESCRIPTION	DATE	APPR
1	FINAL SUBMISSION	5/2/2016	

NAVFAC

COMMONWEALTH OF VIRGINIA
DARRYL R. TREVILLIAN
Lic. No. 7644
5-2-16
SEAL

the PROTECTION ENGINEERING GROUP
14585 Avion Parkway, Suite 150 703-488-9995
Chantilly, Virginia 20151 fax: 703-488-9994
www.PEGroup-Inc.com

Baskervill
101 S 18th St
Ste 300 - 23219
Richmond, Va
804 648 1010
baskervill.com
A/E INFO

APPROVED 5/11/16
FOR COMMANDER NAVFAC
ACTIVITY
SATISFACTORY TO
DES JMT DRW DN CHK DRT
PM/DM KPL/IAS
BRANCH MANAGER
CHIEF ENG/ARCH Mark J. Airaghi, PE
FIRE PROTECTION DPS

DEPARTMENT OF THE NAVY
NAVAL FACILITIES ENGINEERING COMMAND
NAVAL FACILITIES ENGINEERING COMMAND ~ MID-ATLANTIC
NAS OCEANA - VIRGINIA BEACH, VIRGINIA
HAMPTON ROADS IPT
NAVAL AIR STATION OCEANA
VIRGINIA BEACH, VIRGINIA
HANGAR 111 FIRE PROTECTION AND STRUCTURAL REPAIRS
2nd FLOOR REFLECTIVE CEILING PLAN - AREA F

SCALE: AS SHOWN
EPROJECT NO.: 1372146
CONSTR. CONTR. NO.
NAVFAC DRAWING NO. 12716289
SHEET 67 OF 170
A-129

DRAWFORM REVISION: 10 MAY 2014

FILE NAME: J:\GHD\2.1503390 - Oceana Naval Air Station-R111 Hanger Mod\E_Drawings\Arch\1372146_A129 Ceiling Plan.dwg LAYOUT NAME: Plot Final PLOTTED: Thursday, April 14, 2016 - 3:17pm USER: dtl2

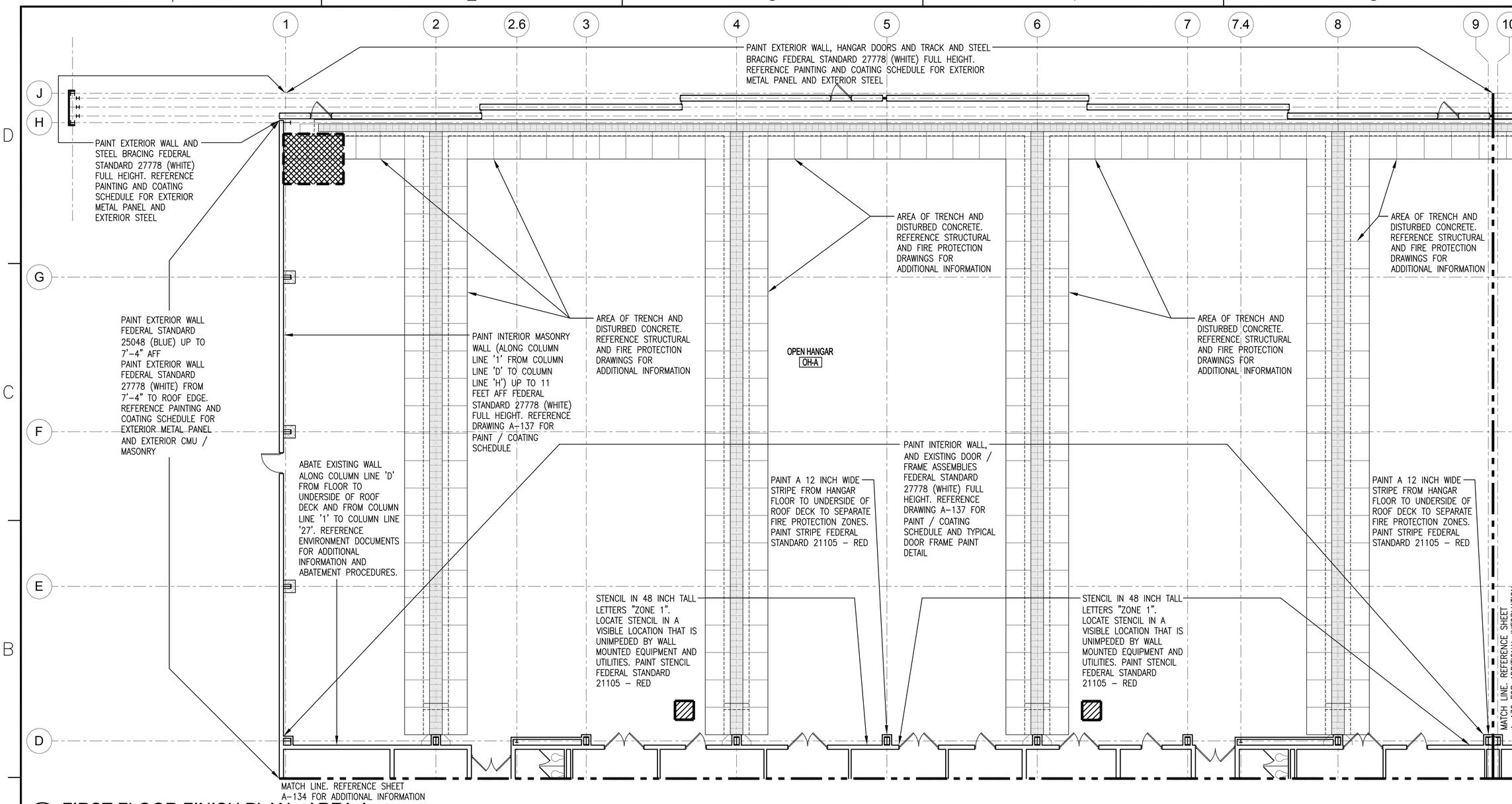

1 FIRST FLOOR FINISH PLAN - AREA A

SCALE: 1/8" = 1'-0"

SHEET NOTES

1. HANGAR FLOOR FINISH: EXISTING EPOXY FLOOR COATING IN AREAS OF UNDISTURBED CONCRETE TO REMAIN. HANGAR FLOOR SLAB DISTURBED PER TRENCH INSTALLATION AND OTHER MISCELLANEOUS FLOOR DISTURBANCE MUST RECEIVE EPOXY FLOOR COATING, INCLUDING TRENCH INTERIOR (LEDGES, WALLS AND FLOOR). REFERENCE PAINT AND COATING SCHEDULE ON DRAWING A-137. REFERENCE STRUCTURAL, PLUMBING AND FIRE PROTECTION DRAWINGS FOR AREA OF TRENCH AND CONCRETE WORK. REPLACE FLOOR STRIPING IN AREAS DISTURBED TO MATCH EXISTING LAYOUT, COLOR AND WIDTH.
2. EXTERIOR WALL FINISH: EXISTING EXTERIOR WALL MUST REMAIN IN CURRENT CONDITION (NO PAINTING).
   BID OPTION: PAINT EXTERIOR WALL AS NOTED ON THE FINISH PLAN, BUILDING ELEVATIONS AND PAINT / COATING SCHEDULE. REFERENCE DRAWINGS A-201 THRU A-204 FOR BUILDING ELEVATIONS. REFERENCE PAINT AND COATING SCHEDULE ON DRAWING A-137.
3. HANGAR INTERIOR WALL FINISH: EXISTING HANGAR INTERIOR WALL FINISH MUST REMAIN IN CURRENT CONDITION (NO PAINTING)
   BID OPTION: PAINT HANGAR INTERIOR WALLS AS NOTED ON THE FINISH PLAN AND PAINT / COATING SCHEDULE. REFERENCE PAINT AND COATING SCHEDULE ON DRAWING A-137.

PATCH AND REPAIR EXISTING WALL SURFACES FOR HOLES, CRACKS AND DISTURBANCES CAUSED FROM REMOVED WALL HANGERS, SUPPORTS, PIPE, EQUIPMENT, MECHANICAL AND ELECTRICAL DEVICES AND OUTLETS, ATTACHMENTS, FURNISHINGS, ETC.

AREA OF FLOOR DISTURBANCE (3'-0" x 3'-0"). REFERENCE STRUCTURAL DRAWINGS FOR PATCH / REPAIR DETAIL. REFERENCE PLUMBING DRAWINGS FOR ADDITIONAL INFORMATION

AREA OF FLOOR DISTURBANCE (8'-0" x 10'-0"). REFERENCE STRUCTURAL DRAWINGS FOR PATCH / REPAIR DETAIL. REFERENCE PLUMBING DRAWINGS FOR ADDITIONAL INFORMATION

PROJECT NORTH

CAUTION: IF THIS PLAN IS A REDUCTION, GRAPHIC SCALE MUST BE USED

0 4' 8' 12' 16'

⅛" = 1'-0

KEY PLAN

A	B	C
D	E	F

STM	DESCRIPTION	DATE	APPR
1	FINAL SUBMISSION	5/2/2016	

NAVFAC

COMMONWEALTH OF VIRGINIA
DARRYL R. TREVILLIAN
Lic. No. 7644
5-2-16
SEAL

the PROTECTION ENGINEERING GROUP
14585 Avion Parkway, Suite 150 703-488-9995
Chantilly, Virginia 20151 fax: 703-488-9994
www.PEGroup-Inc.com

Baskervill
101 S 19th St
Ste 300 - 23219
Richmond, Va
804 248 1010
baskervill.com
A/E INFO

APPROVED 5/2/16
FOR COMMANDER NAVFAC

ACTIVITY

SATISFACTORY TO

DES JWT DRW DN CHK DRT
PM/DM KPL/IAS
BRANCH MANAGER
CHIEF ENG/ARCH Mark J. Airaghi, PE
FIRE PROTECTION DPS

DEPARTMENT OF THE NAVY
NAVAL FACILITIES ENGINEERING COMMAND
NAVAL FACILITIES ENGINEERING COMMAND ~ MID-ATLANTIC
HAMPTON ROADS IPT
NAVAL AIR STATION OCEANA
NAS OCEANA ~ VIRGINIA BEACH, VIRGINIA
VIRGINIA BEACH, VIRGINIA
HANGAR 111 FIRE PROTECTION AND STRUCTURAL REPAIRS
1st FLOOR FINISH PLAN - AREA A

SCALE: AS SHOWN
EPROJECT NO.: 1372146
CONSTR. CONTR. NO.
NAVFAC DRAWING NO. 12716290
SHEET 68 OF 170
A-131

DRAWFORM REVISION: 10 MAY 2014

FILE NAME: J:\GHD\2-150339.0 - Oceana Naval Air Station-R111 Hanger Mod\E_Drawings\Arch\1372146_A131 Finish Plan.dwg LAYOUT NAME: Plot Final PLOTTED: Tuesday, April 26, 2016 - 2:42pm USER: dtj2

PAINT EXTERIOR WALL, HANGAR DOORS AND TRACK AND STEEL BRACING FEDERAL STANDARD 27778 (WHITE) FULL HEIGHT. REFERENCE PAINTING AND COATING SCHEDULE FOR EXTERIOR METAL PANEL AND EXTERIOR STEEL

AREA OF TRENCH AND DISTURBED CONCRETE. REFERENCE STRUCTURAL AND FIRE PROTECTION DRAWINGS FOR ADDITIONAL INFORMATION

OPEN HANGAR
OH-B

PAINT INTERIOR WALL, AND EXISTING DOOR / FRAME ASSEMBLIES FEDERAL STANDARD 27778 (WHITE) FULL HEIGHT. REFERENCE DRAWING A-137 FOR PAINT / COATING SCHEDULE AND TYPICAL DOOR FRAME PAINT DETAIL

PAINT A 12 INCH WIDE STRIPE FROM HANGAR FLOOR TO UNDERSIDE OF ROOF DECK TO SEPARATE FIRE PROTECTION ZONES. PAINT STRIPE FEDERAL STANDARD 21105 – RED

ABATE EXISTING WALL ALONG COLUMN LINE 'D' FROM FLOOR TO UNDERSIDE OF ROOF DECK AND FROM COLUMN LINE '1' TO COLUMN LINE '27'. REFERENCE ENVIRONMENT DOCUMENTS FOR ADDITIONAL INFORMATION AND ABATEMENT PROCEDURES.

STENCIL IN 48 INCH TALL LETTERS "ZONE 1". LOCATE STENCIL IN A VISIBLE LOCATION THAT IS UNIMPEDED BY WALL MOUNTED EQUIPMENT AND UTILITIES. PAINT STENCIL FEDERAL STANDARD 21105 – RED

MATCH LINE. REFERENCE SHEET A-131 FOR ADDITIONAL INFORMATION

MATCH LINE. REFERENCE SHEET A-133 FOR ADDITIONAL INFORMATION

MATCH LINE. REFERENCE SHEET A-135 FOR ADDITIONAL INFORMATION

1 FIRST FLOOR FINISH PLAN - AREA B

SCALE: 1/8" = 1'-0"

PROJECT NORTH

PATCH AND REPAIR EXISTING WALL SURFACES FOR HOLES, CRACKS AND DISTURBANCES CAUSED FROM REMOVED WALL HANGERS, SUPPORTS, PIPE, EQUIPMENT, MECHANICAL AND ELECTRICAL DEVICES AND OUTLETS, ATTACHMENTS, FURNISHINGS, ETC.

AREA OF FLOOR DISTURBANCE (3'-0" x 3'-0"). REFERENCE STRUCTURAL DRAWINGS FOR PATCH / REPAIR DETAIL. REFERENCE PLUMBING DRAWINGS FOR ADDITIONAL INFORMATION

CAUTION: IF THIS PLAN IS A REDUCTION, GRAPHIC SCALE MUST BE USED

0 4' 8' 12' 16'

⅛" = 1'-0

KEY PLAN

A	B	C
D	E	F

SHEET NOTES

1. HANGAR FLOOR FINISH: EXISTING EPOXY FLOOR COATING IN AREAS OF UNDISTURBED CONCRETE TO REMAIN. HANGAR FLOOR SLAB DISTURBED PER TRENCH INSTALLATION AND OTHER MISCELLANEOUS FLOOR DISTURBANCE MUST RECEIVE EPOXY FLOOR COATING, INCLUDING TRENCH INTERIOR (LEDGES, WALLS AND FLOOR). REFERENCE PAINT AND COATING SCHEDULE ON DRAWING A-137. REFERENCE STRUCTURAL, PLUMBING AND FIRE PROTECTION DRAWINGS FOR AREA OF TRENCH AND CONCRETE WORK. REPLACE FLOOR STRIPING IN AREAS DISTURBED TO MATCH EXISTING LAYOUT, COLOR AND WIDTH.

2. EXTERIOR WALL FINISH: EXISTING EXTERIOR WALL MUST REMAIN IN CURRENT CONDITION (NO PAINTING).
BID OPTION: PAINT EXTERIOR WALL AS NOTED ON THE FINISH PLAN, BUILDING ELEVATIONS AND PAINT / COATING SCHEDULE. REFERENCE DRAWINGS A-201 THRU A-204 FOR BUILDING ELEVATIONS. REFERENCE PAINT AND COATING SCHEDULE ON DRAWING A-137.

3. HANGAR INTERIOR WALL FINISH: EXISTING HANGAR INTERIOR WALL FINISH MUST REMAIN IN CURRENT CONDITION (NO PAINTING)
BID OPTION: PAINT HANGAR INTERIOR WALLS AS NOTED ON THE FINISH PLAN AND PAINT / COATING SCHEDULE. REFERENCE PAINT AND COATING SCHEDULE ON DRAWING A-137.

SYM	DESCRIPTION	DATE	APPR
1	FINAL SUBMISSION	5/2/2016	

NAVFAC

COMMONWEALTH OF VIRGINIA
DARRYL R. TREVILLIAN
Lic. No. 7644
5.2.16
SEAL

the PROTECTION ENGINEERING GROUP
14585 Avion Parkway, Suite 150 703-488-9995
Chantilly, Virginia 20151 fax: 703-488-9994
www.PEGroup-Inc.com

Baskervill
101 S 19th St
Ste 300 • 23219
Richmond, Va
804 343 1010
baskervill.com
A/E INFO

APPROVED 5/2/16
FOR COMMANDER NAVFAC
ACTIVITY
SATISFACTORY TO
DES JWT DRW DN CHK DRT
PM/DM KPL/IAS
BRANCH MANAGER
CHIEF ENG/ARCH Mark J. Airaghi, PE
FIRE PROTECTION DPS

DEPARTMENT OF THE NAVY
NAVAL FACILITIES ENGINEERING COMMAND
NAVAL FACILITIES ENGINEERING COMMAND ~ MID-ATLANTIC
NAS OCEANA ~ VIRGINIA BEACH, VIRGINIA
HAMPTON ROADS IPT
NAVAL AIR STATION OCEANA
VIRGINIA BEACH, VIRGINIA
HANGAR 111 FIRE PROTECTION AND STRUCTURAL REPAIRS
1st FLOOR FINISH PLAN - AREA B

SCALE: AS SHOWN
EPROJECT NO.: 1372146
CONSTR. CONTR. NO.
NAVFAC DRAWING NO. 12716291
SHEET 69 OF 170
A-132

DRAWFORM REVISION: 10 MAY 2014

FILE NAME: J:\GHD\2.1503390 - Oceana Naval Air Station-R111 Hanger Mod\E_Drawings\Arch\1372146_A132 Finish Plan.dwg LAYOUT NAME: Plot Final PLOTTED: Tuesday, April 26, 2016 - 2:44pm USER: dtj2

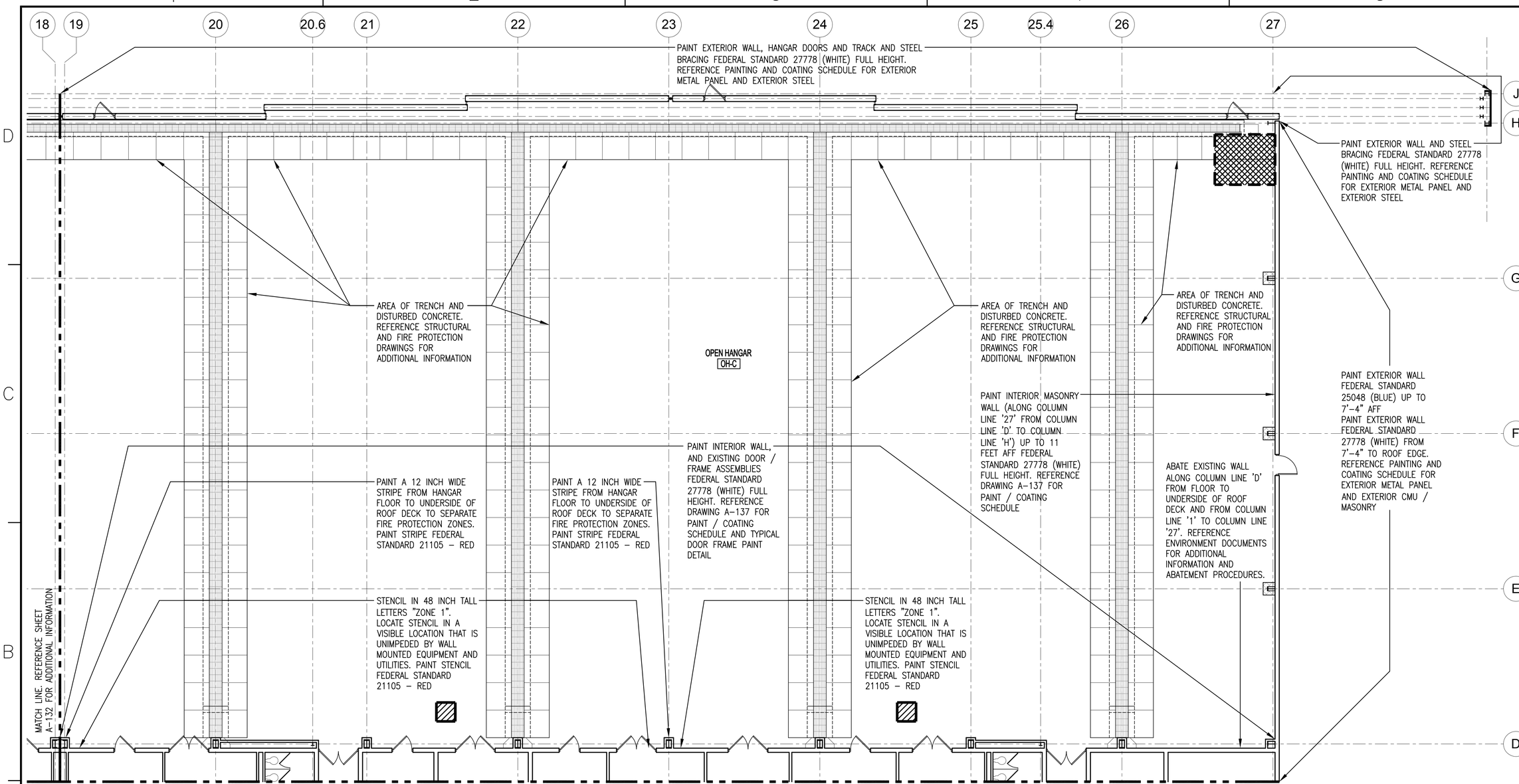

1 FIRST FLOOR FINISH PLAN - AREA C

SCALE: 1/8" = 1'-0"

PROJECT NORTH

SHEET NOTES

1. HANGAR FLOOR FINISH: EXISTING EPOXY FLOOR COATING IN AREAS OF UNDISTURBED CONCRETE TO REMAIN. HANGAR FLOOR SLAB DISTURBED PER TRENCH INSTALLATION AND OTHER MISCELLANEOUS FLOOR DISTURBANCE MUST RECEIVE EPOXY FLOOR COATING, INCLUDING TRENCH INTERIOR (LEDGES, WALLS AND FLOOR). REFERENCE PAINT AND COATING SCHEDULE ON DRAWING A-137. REFERENCE STRUCTURAL, PLUMBING AND FIRE PROTECTION DRAWINGS FOR AREA OF TRENCH AND CONCRETE WORK. REPLACE FLOOR STRIPING IN AREAS DISTURBED TO MATCH EXISTING LAYOUT, COLOR AND WIDTH.

2. EXTERIOR WALL FINISH: EXISTING EXTERIOR WALL MUST REMAIN IN CURRENT CONDITION (NO PAINTING).
   BID OPTION: PAINT EXTERIOR WALL AS NOTED ON THE FINISH PLAN, BUILDING ELEVATIONS AND PAINT / COATING SCHEDULE. REFERENCE DRAWINGS A-201 THRU A-204 FOR BUILDING ELEVATIONS. REFERENCE PAINT AND COATING SCHEDULE ON DRAWING A-137.

3. HANGAR INTERIOR WALL FINISH: EXISTING HANGAR INTERIOR WALL FINISH MUST REMAIN IN CURRENT CONDITION (NO PAINTING)
   BID OPTION: PAINT HANGAR INTERIOR WALLS AS NOTED ON THE FINISH PLAN AND PAINT / COATING SCHEDULE. REFERENCE PAINT AND COATING SCHEDULE ON DRAWING A-137.

PATCH AND REPAIR EXISTING WALL SURFACES FOR HOLES, CRACKS AND DISTURBANCES CAUSED FROM REMOVED WALL HANGERS, SUPPORTS, PIPE, EQUIPMENT, MECHANICAL AND ELECTRICAL DEVICES AND OUTLETS, ATTACHMENTS, FURNISHINGS, ETC.

AREA OF FLOOR DISTURBANCE (3'-0" x 3'-0"). REFERENCE STRUCTURAL DRAWINGS FOR PATCH / REPAIR DETAIL. REFERENCE PLUMBING DRAWINGS FOR ADDITIONAL INFORMATION

AREA OF FLOOR DISTURBANCE (8'-0" x 10'-0"). REFERENCE STRUCTURAL DRAWINGS FOR PATCH / REPAIR DETAIL. REFERENCE PLUMBING DRAWINGS FOR ADDITIONAL INFORMATION

CAUTION: IF THIS PLAN IS A REDUCTION, GRAPHIC SCALE MUST BE USED

0 4' 8' 12' 16'
⅛" = 1'-0

KEY PLAN

A	B	C
D	E	F

SYM	DESCRIPTION	DATE	APPR
1	FINAL SUBMISSION	5/2/2016	

NAVFAC

COMMONWEALTH OF VIRGINIA
DARRYL R. TREVILLIAN
Lic. No. 7644
5-2-16
SEAL

the PROTECTION ENGINEERING GROUP
14585 Avion Parkway, Suite 150 703-488-9995
Chantilly, Virginia 20151 fax: 703-488-9994
www.PEGroup-Inc.com

Baskervill
101 S 18th St
Ste 300 • 23219
Richmond, Va
804 343 1010
baskervill.com
A/E INFO

APPROVED 5/2/16
FOR COMMANDER NAVFAC

ACTIVITY

SATISFACTORY TO

DES JWT DRW DN CHK DRT
PM/DM KPL/IAS
BRANCH MANAGER
CHIEF ENG/ARCH Mark J. Airaghi, PE
FIRE PROTECTION DPS

DEPARTMENT OF THE NAVY
NAVAL FACILITIES ENGINEERING COMMAND
NAVAL FACILITIES ENGINEERING COMMAND ~ MID-ATLANTIC
HAMPTON ROADS IPT
NAS OCEANA ~ VIRGINIA BEACH, VIRGINIA
NAVAL AIR STATION OCEANA
VIRGINIA BEACH, VIRGINIA
HANGAR 111 FIRE PROTECTION AND STRUCTURAL REPAIRS
1st FLOOR FINISH PLAN - AREA C

SCALE: AS SHOWN
EPROJECT NO.: 1372146
CONSTR. CONTR. NO.
NAVFAC DRAWING NO. 12716292
SHEET 70 OF 170
A-133

DRAWFORM REVISION: 10 MAY 2014

FILE NAME: J:\GHD\2-150339.0 – Oceana Naval Air Station-R111 Hanger Mod\E_Drawings\Arch\1372146_A133 Finish Plan.dwg LAYOUT NAME: Plot Final PLOTTED: Tuesday, April 26, 2016 – 2:42pm USER: dtj2

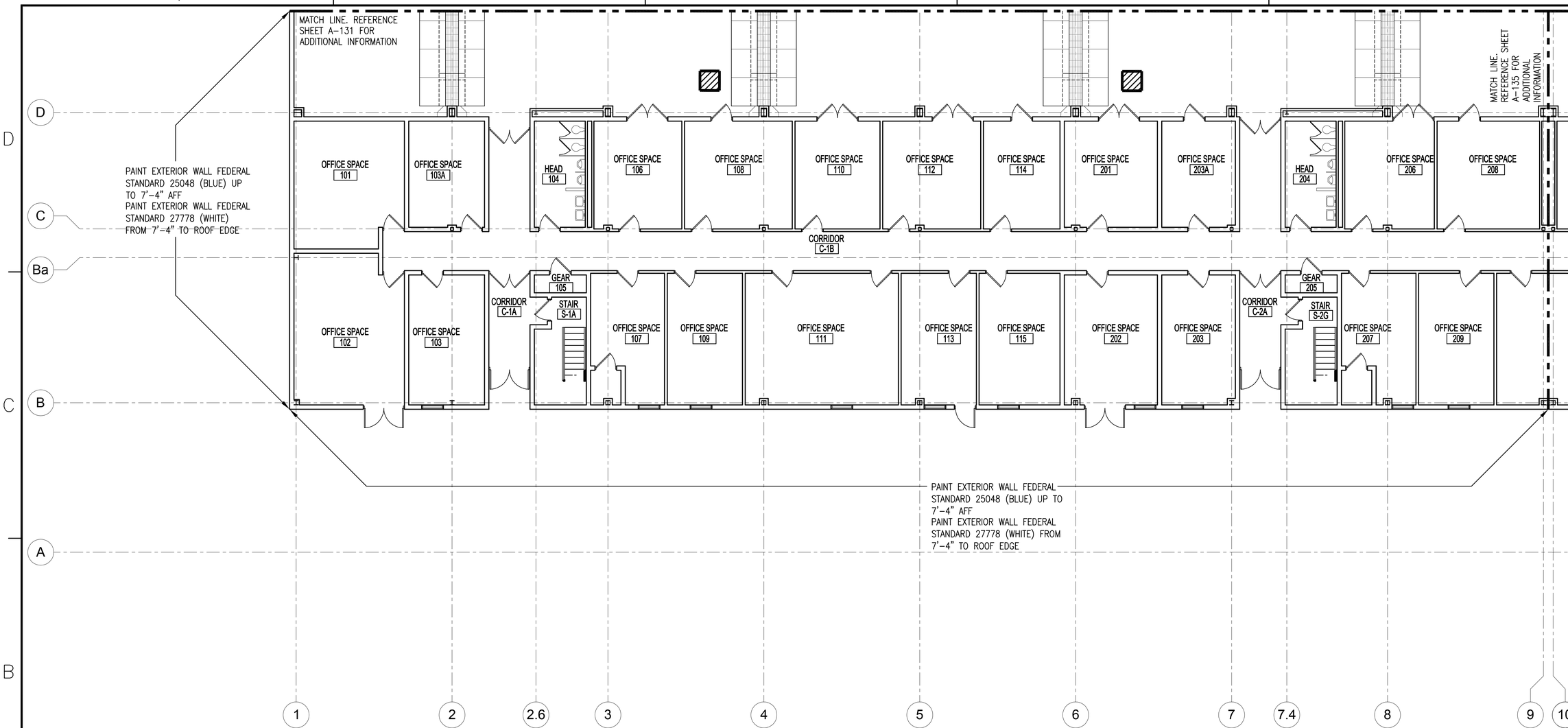

1 FIRST FLOOR FINISH PLAN - AREA D

SCALE: 1/8" = 1'-0"

SHEET NOTES

1. NOT USED.
2. EXTERIOR WALL FINISH: EXISTING EXTERIOR WALL MUST REMAIN IN CURRENT CONDITION (NO PAINTING).
   BID OPTION: PAINT EXTERIOR WALL AS NOTED ON THE FINISH PLAN, BUILDING ELEVATIONS AND PAINT / COATING SCHEDULE. REFERENCE DRAWINGS A-201 THRU A-204 FOR BUILDING ELEVATIONS. REFERENCE PAINT AND COATING SCHEDULE ON DRAWING A-137.

PATCH AND REPAIR EXISTING WALL SURFACES FOR HOLES, CRACKS AND DISTURBANCES CAUSED FROM REMOVED WALL HANGERS, SUPPORTS, PIPE, EQUIPMENT, MECHANICAL AND ELECTRICAL DEVICES AND OUTLETS, ATTACHMENTS, FURNISHINGS, ETC.

AREA OF FLOOR DISTURBANCE (3'-0" x 3'-0"). REFERENCE STRUCTURAL DRAWINGS FOR PATCH / REPAIR DETAIL. REFERENCE PLUMBING DRAWINGS FOR ADDITIONAL INFORMATION

PROJECT NORTH

CAUTION: IF THIS PLAN IS A REDUCTION, GRAPHIC SCALE MUST BE USED

0 4' 8' 12' 16'

⅛" = 1'-0

KEY PLAN

A	B	C
D	E	F

SYM	DESCRIPTION	DATE	APPR
1	FINAL SUBMISSION	5/2/2016	

NAVFAC

COMMONWEALTH OF VIRGINIA
DARRYL R. TREVILLIAN
Lic. No. 7644
5-2-16
SEAL

the PROTECTION ENGINEERING GROUP
14585 Avion Parkway, Suite 150 703-488-9900
Chantilly, Virginia 20151 fax: 703-488-9994
www.PEGroup-Inc.com

Baskervill
101 S 18th St
Ste 300 • 23219
Richmond, Va
804 648 1910
baskervill.com
A/E INFO

APPROVED 5/10/16
FOR COMMANDER NAVFAC
ACTIVITY
SATISFACTORY TO
DES JWT DRW DN CHK DRT
PM/DM KPL/IAS
BRANCH MANAGER
CHIEF ENG/ARCH Mark J. Airaghi, PE
FIRE PROTECTION DPS

DEPARTMENT OF THE NAVY
NAVAL FACILITIES ENGINEERING COMMAND ~ MID-ATLANTIC
NAVAL FACILITIES ENGINEERING COMMAND
HAMPTON ROADS PT
NAS OCEANA - VIRGINIA BEACH, VIRGINIA
NAVAL AIR STATION OCEANA
VIRGINIA BEACH, VIRGINIA

HANGAR 111 FIRE PROTECTION AND STRUCTURAL REPAIRS

1st FLOOR FINISH PLAN - AREA D

SCALE: AS SHOWN
EPROJECT NO.: 1372146
CONSTR. CONTR. NO.
NAVFAC DRAWING NO. 12716293
SHEET 71 OF 170

A-134

DRAWFORM REVISION: 10 MAY 2014

FILE NAME: J:\GHD\2.1503390 - Oceana Naval Air Station-R111 Hanger Mod\E_Drawings\Arch\1372146_A134 Finish Plan.dwg LAYOUT NAME: Plot Final PLOTTED: Thursday, April 14, 2016 - 3:30pm USER: dil2

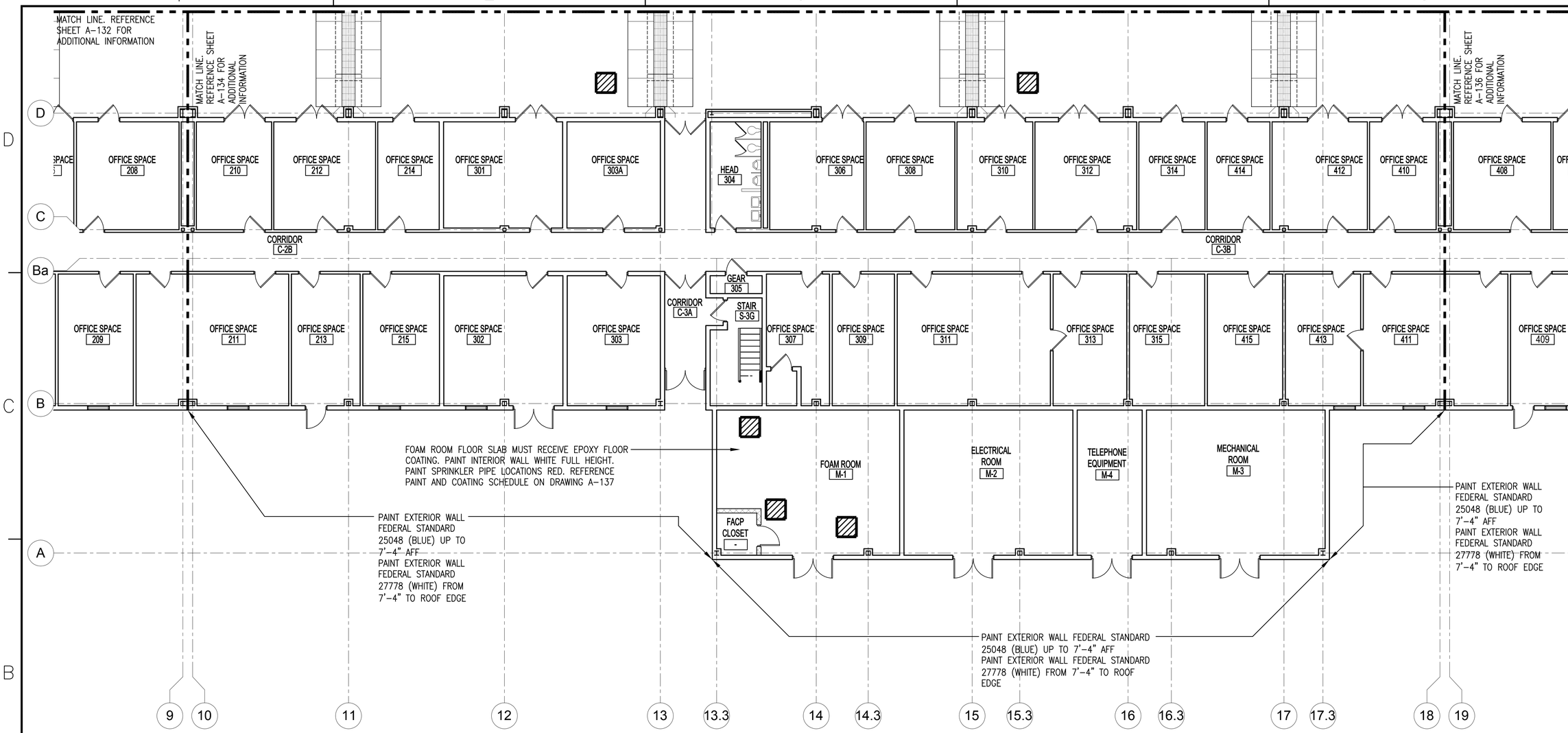

1 FIRST FLOOR FINISH PLAN - AREA E

SCALE: 1/8" = 1'-0"

SHEET NOTES

1. NOT USED.
2. EXTERIOR WALL FINISH: EXISTING EXTERIOR WALL MUST REMAIN IN CURRENT CONDITION (NO PAINTING).
   BID OPTION: PAINT EXTERIOR WALL AS NOTED ON THE FINISH PLAN, BUILDING ELEVATIONS AND PAINT / COATING SCHEDULE. REFERENCE DRAWINGS A-201 THRU A-204 FOR BUILDING ELEVATIONS. REFERENCE PAINT AND COATING SCHEDULE ON DRAWING A-137.

PATCH AND REPAIR EXISTING WALL SURFACES FOR HOLES, CRACKS AND DISTURBANCES CAUSED FROM REMOVED WALL HANGERS, SUPPORTS, PIPE, EQUIPMENT, MECHANICAL AND ELECTRICAL DEVICES AND OUTLETS, ATTACHMENTS, FURNISHINGS, ETC.

AREA OF FLOOR DISTURBANCE (3'-0" x 3'-0"). REFERENCE STRUCTURAL DRAWINGS FOR PATCH / REPAIR DETAIL. REFERENCE PLUMBING DRAWINGS FOR ADDITIONAL INFORMATION

PROJECT NORTH

CAUTION: IF THIS PLAN IS A REDUCTION, GRAPHIC SCALE MUST BE USED

0 4' 8' 12' 16'

⅛" = 1'-0

KEY PLAN

A	B	C
D	E	F

STM	DESCRIPTION	DATE	APPR
1	FINAL SUBMISSION	5/2/2016	

NAVFAC

COMMONWEALTH OF VIRGINIA
DARRYL R. TREVILLIAN
Lic. No. 7644
5-2-16
SEAL

the PROTECTION ENGINEERING GROUP
14585 Avion Parkway, Suite 150 703-488-9900
Chantilly, Virginia 20151 fax: 703-488-9994
www.PEGroup-Inc.com

Baskervill
101 S 18th St
Ste 200 - 23219
Richmond, Va
804 248 1010
baskervill.com
A/E INFO

APPROVED 5/2/16
FOR COMMANDER NAVFAC

ACTIVITY

SATISFACTORY TO

DES JWT DRW DN CHK DRT
PM/DM KPL/IAS
BRANCH MANAGER
CHIEF ENG/ARCH Mark J. Airaghi, PE
FIRE PROTECTION DPS

DEPARTMENT OF THE NAVY
NAVAL FACILITIES ENGINEERING COMMAND
HAMPTON ROADS IPT

NAVAL FACILITIES ENGINEERING COMMAND ~ MID-ATLANTIC
NAS OCEANA – VIRGINIA BEACH, VIRGINIA

NAVAL AIR STATION OCEANA
VIRGINIA BEACH, VIRGINIA

HANGAR 111 FIRE PROTECTION AND STRUCTURAL REPAIRS

1st FLOOR FINISH PLAN - AREA E

SCALE: AS SHOWN
EPROJECT NO.: 1372146
CONSTR. CONTR. NO.
NAVFAC DRAWING NO. 12716294
SHEET 72 OF 170

A-135

DRAWFORM REVISION: 10 MAY 2014

FILE NAME: J:\GHD\2.150339.0 – Oceana Naval Air Station-R111 Hanger Mod\E_Drawings\Arch\1372146_A135 Finish Plan.dwg LAYOUT NAME: Plot Final PLOTTED: Thursday, April 14, 2016 – 3:30pm USER: dll2

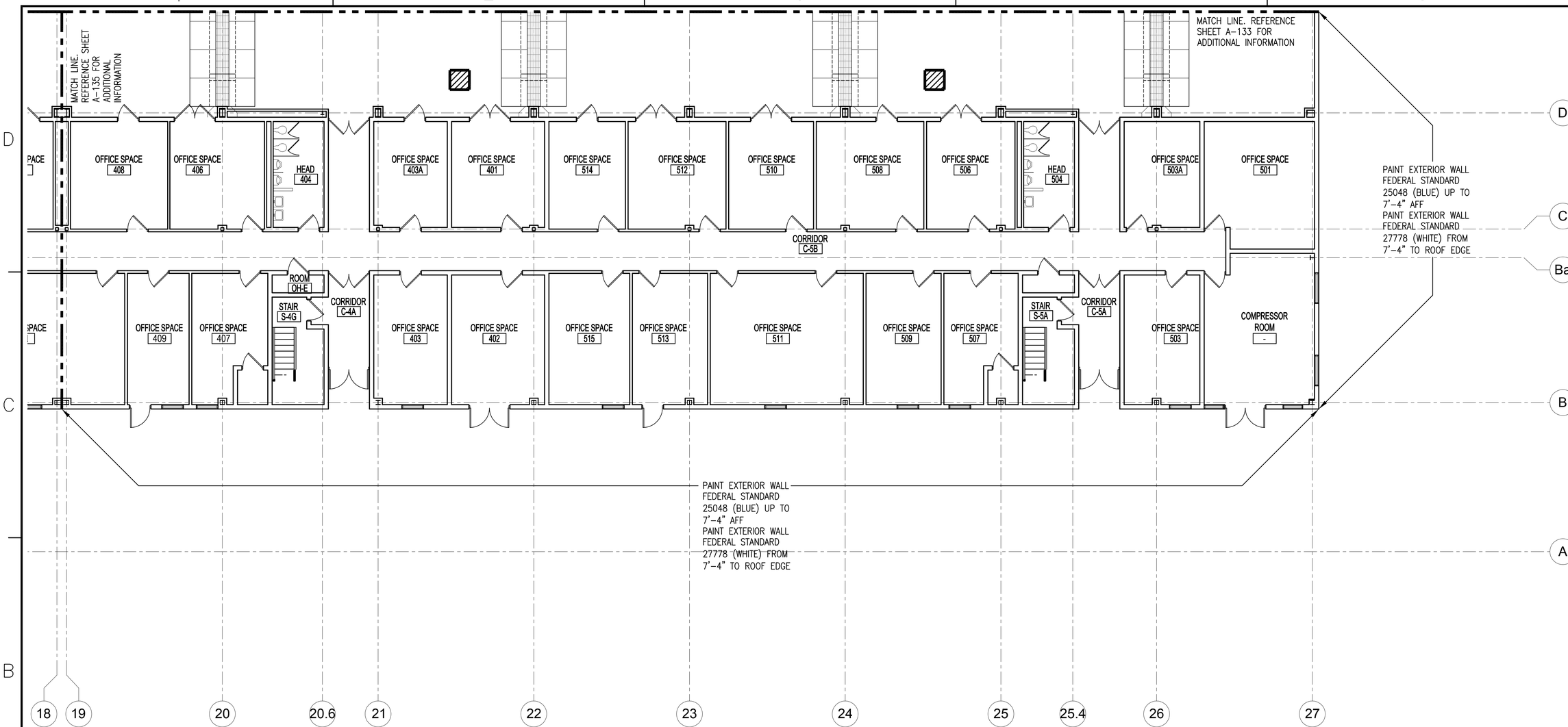

1 FIRST FLOOR FINISH PLAN - AREA F

SCALE: 1/8" = 1'-0"

SHEET NOTES

1. NOT USED.
2. EXTERIOR WALL FINISH: EXISTING EXTERIOR WALL MUST REMAIN IN CURRENT CONDITION (NO PAINTING).
   BID OPTION: PAINT EXTERIOR WALL AS NOTED ON THE FINISH PLAN, BUILDING ELEVATIONS AND PAINT / COATING SCHEDULE. REFERENCE DRAWINGS A-201 THRU A-204 FOR BUILDING ELEVATIONS. REFERENCE PAINT AND COATING SCHEDULE ON DRAWING A-137.

PATCH AND REPAIR EXISTING WALL SURFACES FOR HOLES, CRACKS AND DISTURBANCES CAUSED FROM REMOVED WALL HANGERS, SUPPORTS, PIPE, EQUIPMENT, MECHANICAL AND ELECTRICAL DEVICES AND OUTLETS, ATTACHMENTS, FURNISHINGS, ETC.

AREA OF FLOOR DISTURBANCE (3'-0" x 3'-0"). REFERENCE STRUCTURAL DRAWINGS FOR PATCH / REPAIR DETAIL. REFERENCE PLUMBING DRAWINGS FOR ADDITIONAL INFORMATION

PROJECT NORTH

CAUTION: IF THIS PLAN IS A REDUCTION, GRAPHIC SCALE MUST BE USED

0 4' 8' 12' 16'

⅛" = 1'-0

KEY PLAN

A	B	C
D	E	F

STM	DESCRIPTION	DATE	APPR
1	FINAL SUBMISSION	5/2/2016	

NAVFAC

COMMONWEALTH OF VIRGINIA
DARRYL R. TREVILLIAN
Lic. No. 7644
5-2-16
SEAL

the PROTECTION ENGINEERING GROUP
14585 Avion Parkway, Suite 150 703-488-9900
Chantilly, Virginia 20151 fax: 703-488-9994
www.PEGroup-Inc.com

Baskervill
101 S 18th St
Ste 300 • 23219
Richmond, Va
804 343 1010
baskervill.com
A/E INFO

APPROVED 5/10/16
FOR COMMANDER NAVFAC
ACTIVITY
SATISFACTORY TO
DES JMT DRW DN CHK DRT
PM/DM KPL/IAS
BRANCH MANAGER
CHIEF ENG/ARCH Mark J. Airaghi, PE
FIRE PROTECTION DPS

DEPARTMENT OF THE NAVY
NAVAL FACILITIES ENGINEERING COMMAND
NAVAL FACILITIES ENGINEERING COMMAND ~ MID-ATLANTIC
NAS OCEANA – VIRGINIA BEACH, VIRGINIA
HAMPTON ROADS IPT
NAVAL AIR STATION OCEANA
VIRGINIA BEACH, VIRGINIA
HANGAR 111 FIRE PROTECTION AND STRUCTURAL REPAIRS
1st FLOOR FINISH PLAN - AREA F

SCALE: AS SHOWN
EPROJECT NO.: 1372146
CONSTR. CONTR. NO.
NAVFAC DRAWING NO. 12716295
SHEET 73 OF 170
A-136

DRAWFORM REVISION: 10 MAY 2014

FILE NAME: J:\GHD\2.1503390 – Oceana Naval Air Station-R111 Hanger Mod\E_Drawings\Arch\1372146_A136 Finish Plan.dwg LAYOUT NAME: Plot Final PLOTTED: Thursday, April 14, 2016 – 3:30pm USER: dll2

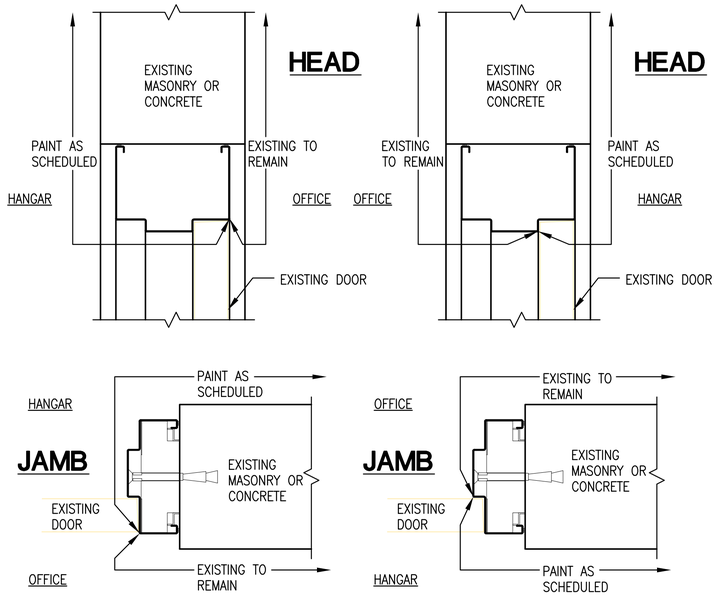

A TYPICAL DOOR FRAME PAINT

SCALE: 3" = 1'-0"

A-131 / A-132 / A-133

PAINTING AND COATING SCHEDULE

SURFACE	FINISH / COLOR	DESCRIPTION / REMARKS
INTERIOR WALL (CMU / MASONRY)	FEDERAL STANDARD 27778 – WHITE	REFERENCE FINISH FLOOR PLANS AND EXTERIOR ELEVATIONS FOR PAINT LOCATION AND PAINT COLOR
EXTERIOR WALL (CMU / MASONRY)	FEDERAL STANDARD 25048 – BLUE OR FEDERAL STANDARD 27778 – WHITE	REFERENCE FINISH FLOOR PLANS AND EXTERIOR ELEVATIONS FOR PAINT LOCATION AND PAINT COLOR
INTERIOR STEEL	FEDERAL STANDARD 27778 – WHITE	REFERENCE FINISH FLOOR PLANS AND EXTERIOR ELEVATIONS FOR PAINT LOCATION AND PAINT COLOR
EXTERIOR STRUCTURAL STEEL	FEDERAL STANDARD 27778 – WHITE	–
HANGAR DOORS	FEDERAL STANDARD 27778 – WHITE	REFERENCE FINISH FLOOR PLANS AND EXTERIOR ELEVATIONS FOR PAINT LOCATION AND PAINT COLOR
EXTERIOR METAL PANEL	FEDERAL STANDARD 25048 – BLUE OR FEDERAL STANDARD 27778 – WHITE	REFERENCE FINISH FLOOR PLANS AND EXTERIOR ELEVATIONS FOR PAINT LOCATION AND PAINT COLOR
INTERIOR GYPSUM BOARD	FEDERAL STANDARD 27778 – WHITE	REFERENCE FINISH FLOOR PLANS AND EXTERIOR ELEVATIONS FOR PAINT LOCATION AND PAINT COLOR
HANGAR FLOOR (CONCRETE)	FEDERAL STANDARD 26044 – GRAY	3/16" EPOXY TROWELED MORTAR FLOORING SYSTEM
FOAM ROOM FLOOR (CONCRETE)	FEDERAL STANDARD 26044 – GRAY	3/16" EPOXY TROWELED MORTAR FLOORING SYSTEM
SPRINKLER PIPING	FEDERAL STANDARD 21105 – RED	DOES NOT INCLUDE STAINLESS STEEL OR GALVANIZED SPRINKLER PIPING
SPRINKLER PIPING (AFFF GALVANIZED PIPE)	GALVANIZED	–
EXTERIOR STEEL DOOR AND FRAME	FEDERAL STANDARD 25048 – BLUE	REFERENCE FINISH FLOOR PLANS AND EXTERIOR ELEVATIONS FOR PAINT LOCATION AND PAINT COLOR
INTERIOR STEEL DOOR AND FRAME	FEDERAL STANDARD 27778 – WHITE	REFERENCE FINISH FLOOR PLANS FOR PAINT LOCATION AND PAINT COLOR
EXISTING EXTERIOR STEEL (WINDOW FRAMES, DOWNSPOUTS AND LOUVERS)	FEDERAL STANDARD 25048 – BLUE OR FEDERAL STANDARD 27778 – WHITE	REFERENCE FINISH FLOOR PLANS AND EXTERIOR ELEVATIONS FOR PAINT LOCATION AND PAINT COLOR
EXISTING EXTERIOR STUCCO	FEDERAL STANDARD 25048 – BLUE OR FEDERAL STANDARD 27778 – WHITE	REFERENCE FINISH FLOOR PLANS AND EXTERIOR ELEVATIONS FOR PAINT LOCATION AND PAINT COLOR

PAINTING AND COATING NOTES

1. PROVIDE / USE LOW-EMITTING PAINTS AND COATINGS
2. INSPECT MASONRY FOR DAMAGES / CRACKS PRIOR TO APPLYING PAINTING AND COATING. PATCH AND REPAIR DAMAGES / CRACKS TO PROVIDE A FLUSH FINISH.
3. REFERENCE FINISH FLOOR PLANS AND EXTERIOR ELEVATIONS FOR PAINT LOCATION AND PAINT COLOR

SYM	DESCRIPTION	DATE	APPR
1	FINAL SUBMISSION	5/2/2016	

NAVFAC

COMMONWEALTH OF VIRGINIA
DARRYL R. TREVILLIAN
Lic. No. 7644
5-2-16
SEAL

the PROTECTION ENGINEERING GROUP
14585 Avion Parkway, Suite 150 703-488-9995
Chantilly, Virginia 20151 fax: 703-488-9994
www.PEGroup-Inc.com

Baskervill
101 S 18th St
Ste 200 - 23219
Richmond, Va
804 648 1910
baskervill.com
A/E INFO

APPROVED 5/10/16
FOR COMMANDER NAVFAC
ACTIVITY
SATISFACTORY TO
DES JMT DRW DN CHK DRT
PM/DM KPL/IAS
BRANCH MANAGER
CHIEF ENG/ARCH Mark J. Airaghi, PE
FIRE PROTECTION DPS

DEPARTMENT OF THE NAVY
NAVAL FACILITIES ENGINEERING COMMAND
HAMPTON ROADS IPT
NAVAL FACILITIES ENGINEERING COMMAND ~ MID-ATLANTIC
NAS OCEANA - VIRGINIA BEACH, VIRGINIA
NAVAL AIR STATION OCEANA
VIRGINIA BEACH, VIRGINIA
HANGAR 111 FIRE PROTECTION AND STRUCTURAL REPAIRS
FINISH SCHEDULE AND DETAILS

SCALE: AS SHOWN
EPROJECT NO.: 1372146
CONSTR. CONTR. NO.
NAVFAC DRAWING NO. 12716296
SHEET 74 OF 170
A-137

DRAWFORM REVISION: 10 MAY 2014

FILE NAME: J:\GHD\2.1503339.0 - Oceana Naval Air Station-R111 Hanger Mod\E_Drawings\Arch\1372146_A137 Finish Schedule.dwg LAYOUT NAME: Plot Final PLOTTED: Monday, April 18, 2016 - 2:30pm USER: dh12

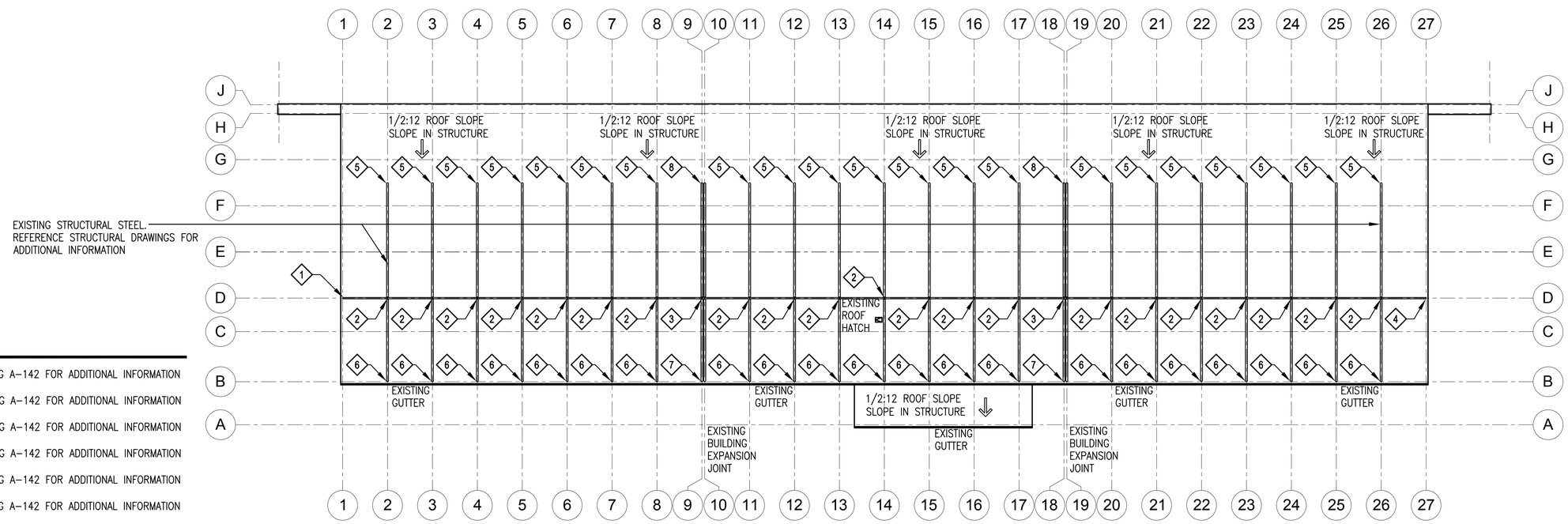

A ROOF PLAN
SCALE: NTS

PROJECT NORTH

KEY NOTES

1. REFERENCE DETAIL A ON DRAWING A-142 FOR ADDITIONAL INFORMATION
2. REFERENCE DETAIL B ON DRAWING A-142 FOR ADDITIONAL INFORMATION
3. REFERENCE DETAIL C ON DRAWING A-142 FOR ADDITIONAL INFORMATION
4. REFERENCE DETAIL D ON DRAWING A-142 FOR ADDITIONAL INFORMATION
5. REFERENCE DETAIL E ON DRAWING A-142 FOR ADDITIONAL INFORMATION
6. REFERENCE DETAIL F ON DRAWING A-142 FOR ADDITIONAL INFORMATION
7. REFERENCE DETAIL G ON DRAWING A-142 FOR ADDITIONAL INFORMATION
8. REFERENCE DETAIL H ON DRAWING A-142 FOR ADDITIONAL INFORMATION

ROOF SHEET NOTES

EXISTING ROOF ASSEMBLY CONSISTS OF THE FOLLOWING:
STEEL ROOF DECK, 22 GAGE
3" ROOF INSULATION
1/2" COVER BOARD
TWO-PLY ROOF MEMBRANE (ONE PLY AND CAP SHEET)

EXISTING TWO-PLY SBS MODIFIED BITUMEN ROOF SYSTEM IS MANUFACTURED AND WARRANTED BY JOHNS MANVILLE (MANUFACTURER). EXISTING WARRANTY NUMBER ANM137271808 MUST REMAIN IN GOOD STANDING DURING AND FOLLOWING COMPLETION OF THE WORK. CONTRACTOR MUST CONTACT MANUFACTURER'S WARRANTY DIVISION PRIOR TO CONSTRUCTION AND TO SUBMIT LOCATION DRAWING AND DETAILS TO THE MANUFACTURER FOR APPROVAL. PROVIDE WRITTEN APPROVAL TO PROCEED FROM THE MANUFACTURER TO THE CONTRACTING OFFICER PRIOR TO PROCEEDING WITH THE WORK.

PROVIDE WORK TO THE EXISTING ROOF SYSTEM DURING THE COURSE OF CONSTRUCTION BY AN APPROVED APPLICATOR OF THE EXISTING ROOF SYSTEM. PROVIDE THE CONTRACTING OFFICER WITH WRITTEN APPROVAL FROM THE MANUFACTURER OF THE CONTRACTOR APPROVED TO PERFORM THE WORK.

PROTECT EXISTING ROOF SYSTEM FROM DAMAGE DURING CONSTRUCTION ACTIVITIES. REPAIR DAMAGE TO THE EXISTING ROOF SYSTEM AT NO ADDITIONAL COST TO THE CONTRACTING OFFICER. INSPECT AND APPROVE REPAIRS BY THE WARRANTING MANUFACTURER. CONTRACTOR TO PROVIDE A WALKING PLATFORM, WIDTH AS REQUIRED FOR USE BY THE CONTRACTOR, FROM POINTS OF ROOF ACCESS TO AND AROUND ROOF AREAS TO BE DISTURBED DURING CONSTRUCTION.

AT COMPLETION OF THE WORK, PROVIDE A WRITTEN INSPECTION REPORT FROM THE MANUFACTURER TO THE CONTRACTING OFFICER WHICH STATES THAT THE EXISTING ROOFING SYSTEM HAS BEEN INSPECTED AND IS ACCEPTABLE FOR CONTINUING WARRANTY COVERAGE WITHOUT EXCEPTION.

REPAIR DAMAGES TO OTHER BUILDING COMPONENTS AND TO INTERIOR FINISHES, FIXTURES, EQUIPMENT, FURNITURE AND TO OTHER BUILDING CONTENTS, WHEN DAMAGE IS RELATED TO DAMAGE TO THE EXISTING ROOF SYSTEM DURING THE PROJECT, AT NO ADDITIONAL COST TO THE CONTRACTING OFFICER. CONTRACTOR MUST RESTORE DAMAGED COMPONENTS TO THEIR CONDITION PRIOR TO THE START OF THE WORK OF THE CONTRACT.

PROVIDE ROOFING MATERIALS (MEMBRANE, MEMBRANE FLASHINGS, TERMINATION BARS, FASTENERS AND PLATES, ADHESIVES, TAPES, PRIMERS, CLEANERS, MEMBRANE SEALANTS, ETC.) BY THE MANUFACTURER OF THE EXISTING PRIMARY ROOF SYSTEM. APPROVE ACCESSORY MATERIALS (METAL FLASHINGS, METAL SEALANTS, ETC) FOR THEIR INTENDED USE BY THE MANUFACTURER OF THE EXISTING PRIMARY ROOF SYSTEM.

EXISTING MEMBRANE SYSTEM MUST REMAIN WATERTIGHT THROUGHOUT CONSTRUCTION, INCLUDING PROVISION FOR TEMPORARY FLASHINGS OR WATERTIGHT COVERINGS UNTIL PERMANENT FLASHINGS CAN BE COMPLETED. REPAIR DAMAGE DURING THE CONSTRUCTION TO THE ROOF SYSTEM OR TO THE BUILDING CONTENTS DUE TO PENETRATION OF DUST, DEBRIS OR WATER BY THE CONTRACTOR AT NO ADDITIONAL COST TO THE CONTRACTING OFFICER.

ROOF FLASHING SHEET NOTES

FLASH PENETRATIONS WITH A TWO-PART FLUID APPLIED WITH STITCH BONDED POLYESTER REINFORCING FABRIC. FLASHED PENETRATIONS INCLUDE BUT ARE NOT LIMITED TO STEEL BUILDING COLUMNS, STEEL PIPES, ETC ARE COVERED UNDER THE EXISTING ROOF WARRANTY.

FLUID APPLIED FLASHING: FLASHING CEMENT. TWO-COMPONENT, HIGH SOLIDS, ELASTOMERIC ASPHALT MODIFIED URETHANE. DESIGNED FOR TROWEL, BRUSH OR ROLLER APPLICATION.
1. ELASTOMERIC WATERPROOFING, ASTM C836 AND C957: EXCEEDS ALL CRITERIA
2. SOLIDS BY VOLUME: 86 PERCENT
3. VOLATILE ORGANIC COMPOUNDS (VOC): 0.92 POUNDS PER GALLON (92 G/L)
4. MULLEN BURST STRENGTH, ASTM D751, 50 MILS IN FABRIC: 100 POUNDS PER SQUARE INCH
5. TEAR STRENGTH, ASTM D624, DIE C: 115 POUNDS PER INCH
6. TENSILE STRENGTH, ASTM D412, 100-MIL SHEET: 650 POUNDS PER SQUARE INCH
7. EXTENSION TO BREAK, ASTM D412: 325 PERCENT
8. RECOVERY FROM 100 PERCENT EXTENSION:
   - 8.1. AFTER 5 MINUTES: 98 PERCENT
   - 8.2. AFTER 24 HOURS: 100 PERCENT
9. COATING PERFORMANCE, CRACK BRIDGING:
   - 9.1. 10 CYCLES AT MINUS 15 DEGREES F (MINUS 26 DEGREES C): GREATER THAN 1/8-INCH
   - 9.2. AFTER HEAT AGING: GREATER THAN 1/4-INCH
10. COATING PERFORMANCE, WEATHERING, ASTM D822: 5000 HOURS: NO CRACKING
11. SOFTENING POINT, ASTM D36: GREATER THAN 275 DEGREES F (160 DEGREES C)
12. DEFLECTION TEMPERATURE, ASTM D648: BELOW MINUS 40 DEGREES F (MINUS 50 DEGREES C)
13. SERVICE TEMPERATURE: MINUS 60 DEGREES F TO 220 DEGREES F (MINUS 50 DEGREES C TO 105 DEGREES C)
14. HARDNESS, ASTM D2240, SHORE A, 77 DEGREES F (25 DEGREES C)
15. PERMEABILITY TO WATER VAPOR, ASTM E96, METHOD E, 100 DEGREES F (38 DEGREES C)
16. ABRASION RESISTANCE, WEIGHT LOSS, ASTM D4060: 1.2 MG
17. ADHESION TO CONCRETE, DRY ELCOMETER: 350 POUNDS PER SQUARE INCH
18. COLOR: BLACK

PRIMER: ORGANOSILANE COMPOUND DISPERSED IN ISOPROPYL ALCOHOL. ENSURES A CONTINUOUS AND UNIFORM BOND BETWEEN SURFACES. USE THE PRIMER OVER NON-POROUS SURFACES SUCH AS STEEL, COPPER, ALUMINUM AND PLASTICS. DO NOT USE WHERE SOLVENT CLEANERS ARE PROHIBITED.
1. SOLIDS BY VOLUME: LESS THAN 1 PERCENT
2. VOLATILE ORGANIC COMPOUNDS (VOC): 6.4 POUNDS PER GALLON (743 G/L)

REINFORCING FABRIC: STITCH BONDED POLYESTER. COMPATIBLE WITH COATING MATERIALS.
1. WEIGHT: 3 OUNCES PER SQUARE YARD (100 G/M^2)
2. TENSILE STRENGTH, ASTM D1682: 57.1 POUNDS (30 KG)
3. ELONGATION, ASTM D1682: 61.65 PERCENT
4. MULLEN BURST STRENGTH, ASTM D3726: 176.8 POUNDS PER SQUARE INCH (1,215 KPA)
5. TRAPEZOID TEAR STRENGTH, ASTM D1117: 16.1 POUNDS (7.2 KG)

ROOF STEEL PAINT SHEET NOTES

PERFORM WORK AT EACH STRUCTURAL STEEL MEMBER TO PREPARE AND PAINT FROM THE ROOF SURFACE. USE WALKING PLATFORMS FOR WORK THAT CAN BE PERFORMED FROM A STANDING POSITION. FOR ALL WORK ABOVE THIS LEVEL THAT IS OUT OF REACH, THE CONTRACTOR MUST USE VERTICAL CONVEYANCE MEASURES THAT INCLUDE BUT ARE NOT LIMITED TO LADDERS AND SCAFFOLDING. PRIOR TO ERECTING THESE MEASURES, THE CONTRACTOR MUST SUBMIT AN ACTION PLAN TO THE CONTRACTING OFFICER FOR REVIEW THAT DESCRIBES THE TYPE OF VERTICAL CONVEYANCE AND THE PROCEDURES OF HOW THE ROOF ASSEMBLY WILL BE PROTECTED FROM DAMAGE DURING THIS PROCESS.

REMOVE THE EXISTING PAINT AND PREPARE STEEL SURFACES FOR PAINT COATING. CONTRACTOR TO PREVENT WINDBORNE DEBRIS CREATED DURING THIS PROCESS AS THIS IS AN ENVIRONMENTAL AND FLIGHT LINE CONCERN. PERIMETER BARRIERS AND ROOF COVERINGS ARE NOT ACCEPTABLE. THE CONTRACTOR MUST PROVIDE A PAINT REMOVAL ACTION PLAN THAT ADDRESSES METHODS FOR REMOVING PAINT, DEBRIS COLLECTION, ENVIRONMENTAL IMPACTS AND EXISTING STEEL PREPARATION FOR NEW COATINGS.

REFERENCE STRUCTURAL DRAWINGS AND SPECIFICATIONS FOR THE TYPE OF PAINT / COATING. CONTRACTOR TO PREVENT WINDBORNE PAINT CREATED DURING THIS PROCESS AS THIS IS AN ENVIRONMENTAL AND FLIGHT LINE CONCERN. SPRAY OR AIRLESS SPRAY PROCEDURES ARE NOT ACCEPTABLE. THE CONTRACTOR MUST PROVIDE A PAINT APPLICATION PLAN TO THE CONTRACTING OFFICER FOR REVIEW AND APPROVAL.

AT THE COMPLETION OF WORK, THE CONTRACTOR MUST PROVIDE A WRITTEN INSPECTION REPORT FROM THE ROOF MANUFACTURER TO THE CONTRACTING OFFICER STATING THAT THE EXISTING ROOF SYSTEM HAS BEEN INSPECTED AND IS ACCEPTABLE FOR CONTINUING WARRANTY COVERAGE WITHOUT EXCEPTION. SHOULD ROOF DAMAGE BE DISCOVERED REQUIRING REPAIRS, PROVIDE ROOFING MATERIALS (INCLUDES BUT IS NOT LIMITED TO MEMBRANE, MEMBRANE FLASHINGS, TERMINATION BARS, FASTENERS, PLATES, ADHESIVES, TAPES, PRIMERS, CLEANERS, MEMBRANE SEALANTS) BY THE MANUFACTURER OF THE EXISTING ROOF SYSTEM. APPROVE ACCESSORY MATERIALS (METAL FLASHINGS, METAL SEALANTS) FOR THEIR INTENDED USE BY THE MANUFACTURER OF THE EXISTING ROOF SYSTEM.

SYM	DESCRIPTION	DATE	APPR
1	FINAL SUBMISSION	5/2/2016	

NAVFAC

COMMONWEALTH OF VIRGINIA
DARRYL R. TREVILLIAN
Lic. No. 7644
5-2-16
SEAL

the PROTECTION ENGINEERING GROUP
14585 Avion Parkway, Suite 150 703-488-9900
Chantilly, Virginia 20151 fax: 703-488-9994
www.PEGroup-Inc.com

Baskervill
101 S 18th St
Ste 200 • 23219
Richmond, Va
804 648 1010
baskervill.com
A/E INFO

APPROVED 5/10/16
FOR COMMANDER NAVFAC
ACTIVITY
SATISFACTORY TO
DES JWT DRW DN CHK DRT
PM/DM KPL/IAS
BRANCH MANAGER
CHIEF ENG/ARCH Mark J. Airaghi, PE
FIRE PROTECTION DPS

DEPARTMENT OF THE NAVY
NAVAL FACILITIES ENGINEERING COMMAND
HAMPTON ROADS IPT
NAVAL FACILITIES ENGINEERING COMMAND – MID-ATLANTIC
NAS OCEANA – VIRGINIA BEACH, VIRGINIA
NAVAL AIR STATION OCEANA
VIRGINIA BEACH, VIRGINIA
HANGAR 111 FIRE PROTECTION AND STRUCTURAL REPAIRS
ROOF PLAN - ARCHITECTURAL

SCALE: AS SHOWN
EPROJECT NO.: 1372146
CONSTR. CONTR. NO.
NAVFAC DRAWING NO. 12716297
SHEET 75 OF 170
A-141

DRAWFORM REVISION: 10 MAY 2014

FILE NAME: J:\GHD\2-1503390 - Oceana Naval Air Station-R111 Hanger Mod\E_Drawings\Arch\1372146_A141 Roof Plan.dwg LAYOUT NAME: Plot Final PLOTTED: Thursday, April 14, 2016 - 3:21pm USER: dtj2

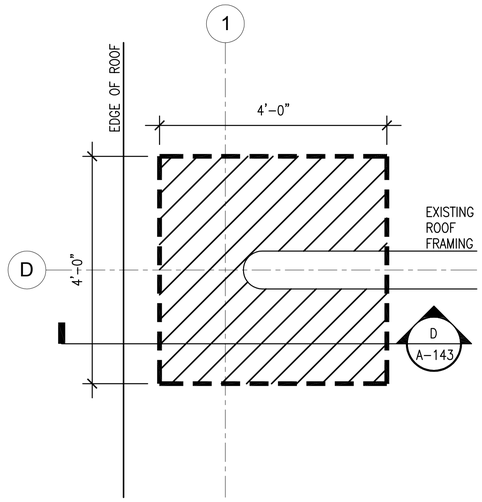

A ROOF DETAIL
SCALE: 3/4" = 1'-0" A-141

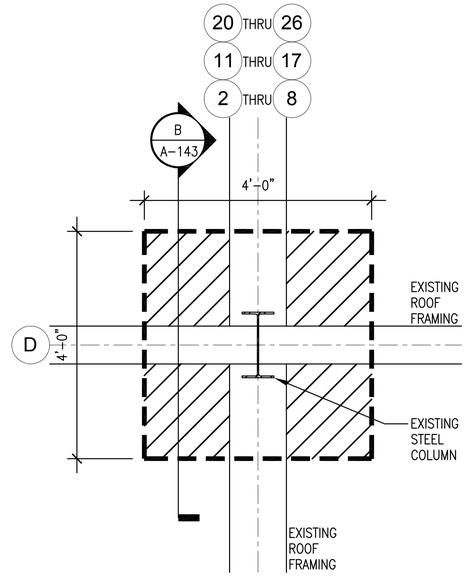

B ROOF DETAIL
SCALE: 3/4" = 1'-0" A-141

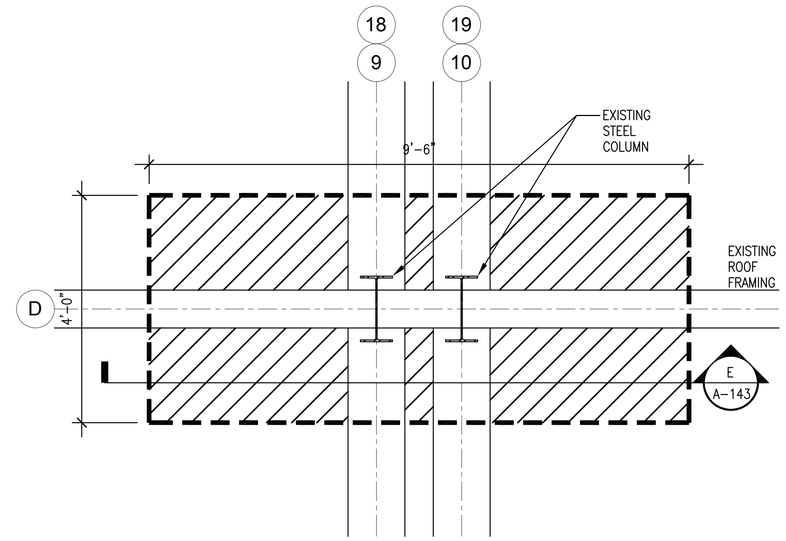

C ROOF DETAIL
SCALE: 3/4" = 1'-0" A-141

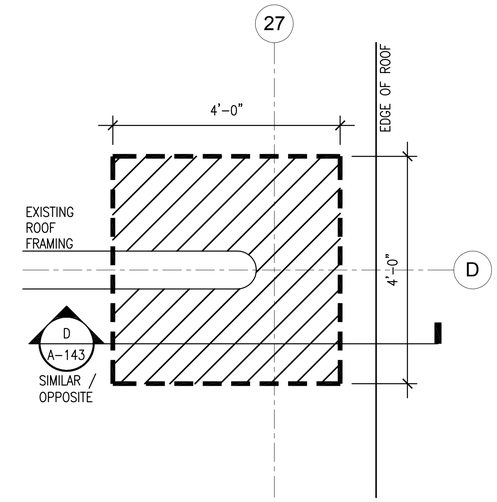

D ROOF DETAIL
SCALE: 3/4" = 1'-0" A-141

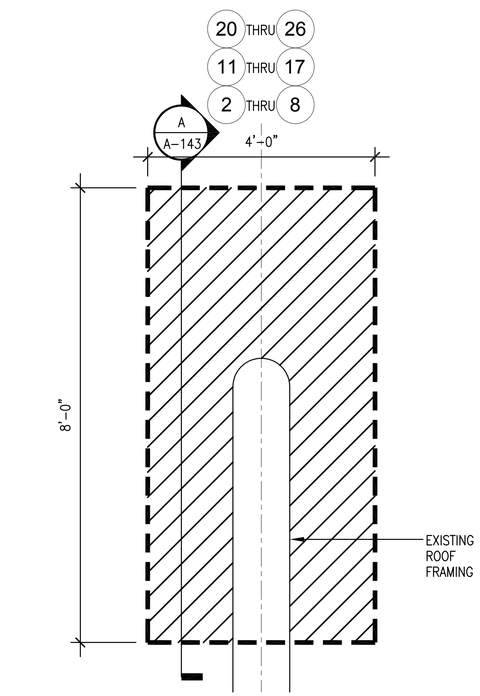

E ROOF DETAIL
SCALE: 3/4" = 1'-0" A-141

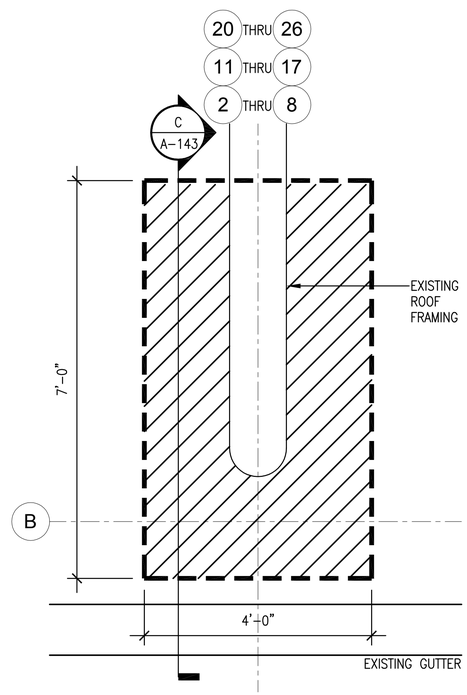

F ROOF DETAIL
SCALE: 3/4" = 1'-0" A-141

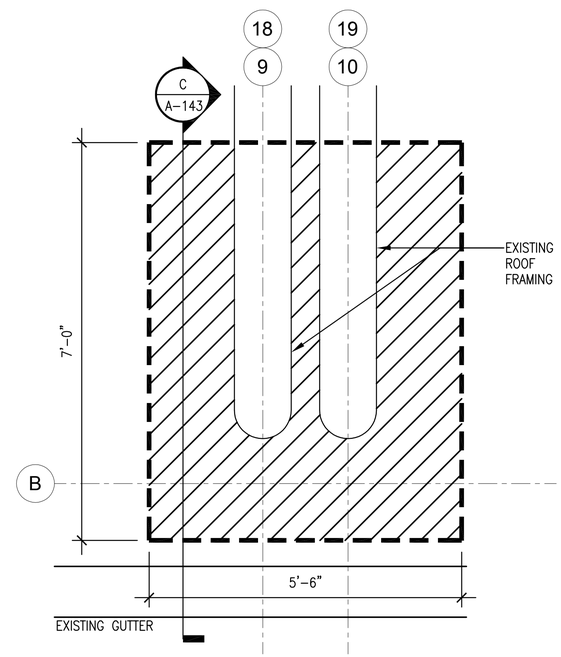

G ROOF DETAIL
SCALE: 3/4" = 1'-0" A-141

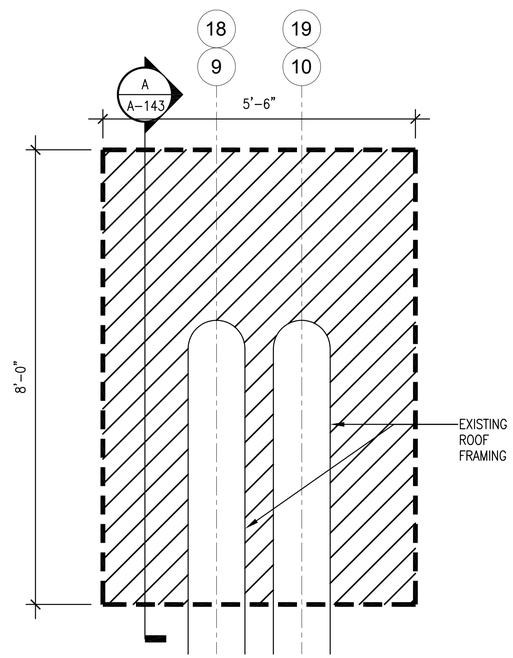

H ROOF DETAIL
SCALE: 3/4" = 1'-0" A-141

AREA OF WORK: REMOVE EXISTING ROOF MEMBRANE, ROOF INSULATION, WOOD BLOCKING AND FLASHING COMPLETE IN AREA NOTED. EXISTING METAL DECK AND STRUCTURAL SUPPORT TO REMAIN. INSPECT EXISTING STEEL FOR DAMAGE AND CORROSION. REFERENCE STRUCTURAL DRAWINGS FOR ADDITIONAL INFORMATION.

CAUTION: IF THIS PLAN IS A REDUCTION, GRAPHIC SCALE MUST BE USED

0 8" 1'-4" 2'-8"

3/4" = 1'-0

SYM	DESCRIPTION	DATE	APPR
1	FINAL SUBMISSION	5/2/2016	

NAVFAC

COMMONWEALTH OF VIRGINIA
DARRYL R. TREVILLIAN
Lic. No. 7644
5/2/16
SEAL

the PROTECTION ENGINEERING GROUP
14585 Avion Parkway, Suite 150 703-488-9995
Chantilly, Virginia 20151 fax: 703-488-9994
www.PEGroup-Inc.com

Baskervill
101 S 18th St
Ste 200 • 23219
Richmond, Va
804 343 1010
baskervill.com
A/E INFO

APPROVED 5/2/16
FOR COMMANDER NAVFAC

ACTIVITY

SATISFACTORY TO

DES JMT DRW DN CHK DRT
PM/DM KPL/IAS
BRANCH MANAGER
CHIEF ENG/ARCH Mark J. Airaghi, PE
FIRE PROTECTION DPS

DEPARTMENT OF THE NAVY
NAVAL FACILITIES ENGINEERING COMMAND
NAVAL FACILITIES ENGINEERING COMMAND ~ MID-ATLANTIC
NAS OCEANA ~ VIRGINIA BEACH, VIRGINIA
NAVAL AIR STATION OCEANA
HAMPTON ROADS PT
VIRGINIA BEACH, VIRGINIA

HANGAR 111 FIRE PROTECTION AND STRUCTURAL REPAIRS

ROOF DETAILS - ARCHITECTURAL

SCALE: AS SHOWN
EPROJECT NO.: 1372146
CONSTR. CONTR. NO.
NAVFAC DRAWING NO. 12716298
SHEET 76 OF 170

A-142

DRAWFORM REVISION: 10 MAY 2014

FILE NAME: J:\GHD\2.1503390 - Oceana Naval Air Station-R111 Hanger Mod\E_Drawings\Arch\1372146_A142 Roof Details.dwg LAYOUT NAME: Plot Final PLOTTED: Thursday, April 14, 2016 - 3:21pm USER: dtj2

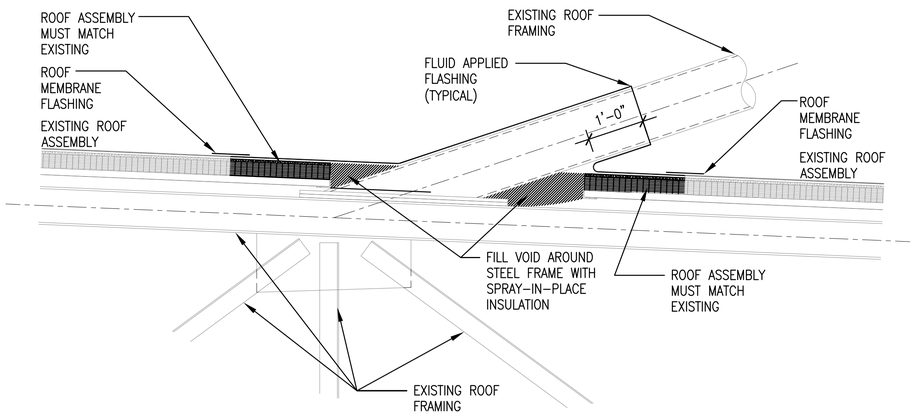

A ROOF DETAIL

SCALE: 3/4" = 1'-0"

A-142

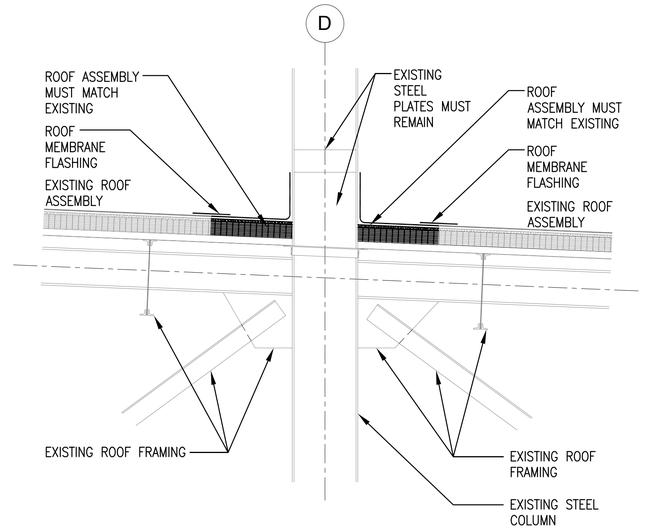

B ROOF DETAIL

SCALE: 3/4" = 1'-0"

A-142

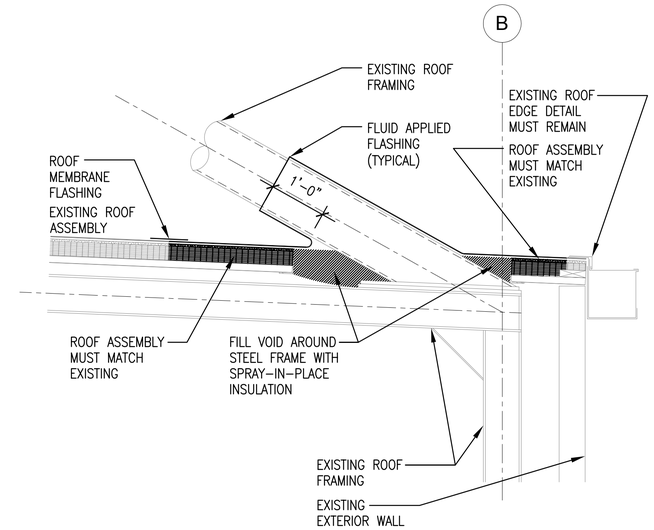

C ROOF DETAIL

SCALE: 3/4" = 1'-0"

A-142

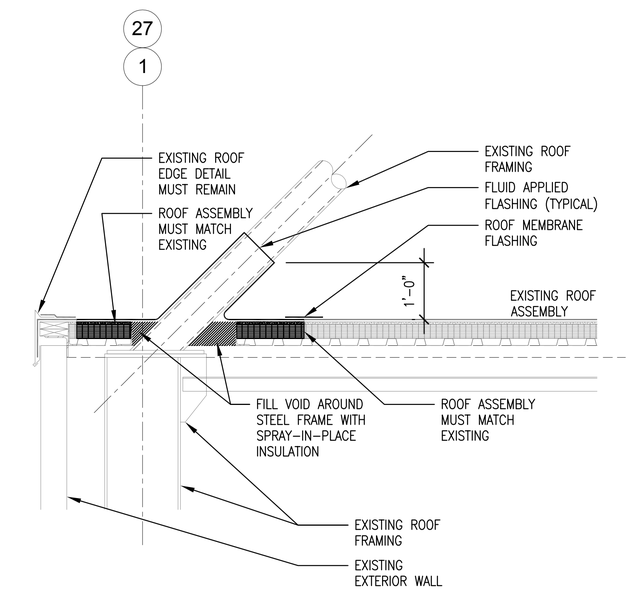

D ROOF DETAIL

SCALE: 3/4" = 1'-0"

A-142

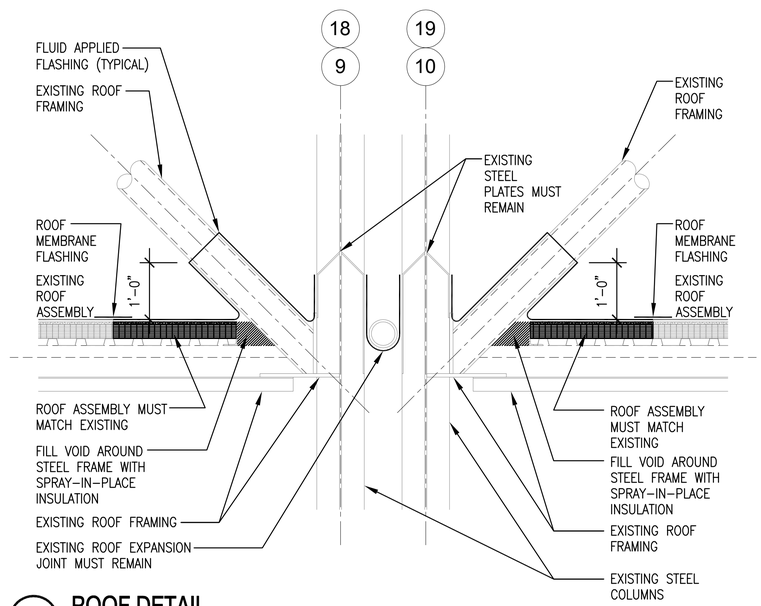

E ROOF DETAIL

SCALE: 3/4" = 1'-0"

A-142

CAUTION: IF THIS PLAN IS A REDUCTION, GRAPHIC SCALE MUST BE USED

0 8" 1'-4" 2'-8"

3/4" = 1'-0

SYM	DESCRIPTION	DATE	APPR
1	FINAL SUBMISSION	5/2/2016	

NAVFAC

COMMONWEALTH OF VIRGINIA
DARRYL R. TREVILLIAN
Lic. No. 7644
5-2-16
SEAL

the PROTECTION ENGINEERING GROUP
14585 Avion Parkway, Suite 150 703-488-9995
Chantilly, Virginia 20151 fax: 703-488-9994
www.PEGroup-Inc.com

Baskervill
101 S 18th St
Ste 300 • 23219
Richmond, Va
804 343 1010
baskervill.com
A/E INFO

APPROVED 5/10/16
FOR COMMANDER NAVFAC

ACTIVITY

SATISFACTORY TO

DES JWT DRW DN CHK DRT

PM/DM KPL/IAS

BRANCH MANAGER

CHIEF ENG/ARCH Mark J. Airaghi, PE

FIRE PROTECTION DPS

DEPARTMENT OF THE NAVY
NAVAL FACILITIES ENGINEERING COMMAND
HAMPTON ROADS IPT
NAVAL FACILITIES ENGINEERING COMMAND ~ MID-ATLANTIC
NAS OCEANA ~ VIRGINIA BEACH, VIRGINIA
NAVAL AIR STATION OCEANA
VIRGINIA BEACH, VIRGINIA

HANGAR 111 FIRE PROTECTION AND STRUCTURAL REPAIRS

ROOF DETAILS - ARCHITECTURAL

SCALE: AS SHOWN

EPROJECT NO.: 1372146

CONSTR. CONTR. NO.

NAVFAC DRAWING NO. 12716299

SHEET 77 OF 170

A-143

DRAWFORM REVISION: 10 MAY 2014

FILE NAME: J:\GHD\2-150339.0 - Oceana Naval Air Station-R111 Hanger Mod\E_Drawings\Arch\1372146_A143 Roof Details.dwg LAYOUT NAME: Plot Final PLOTTED: Thursday, April 14, 2016 - 3:22pm USER: dtj2

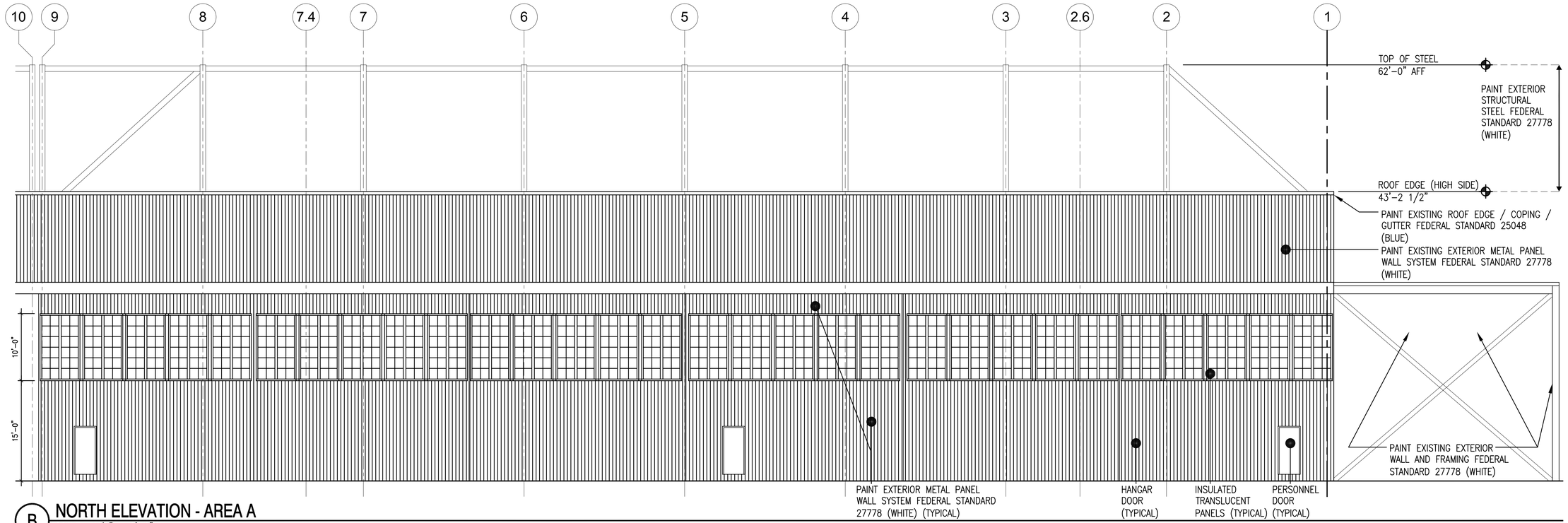

B NORTH ELEVATION - AREA A
SCALE: 1/8" = 1'-0"

A-111

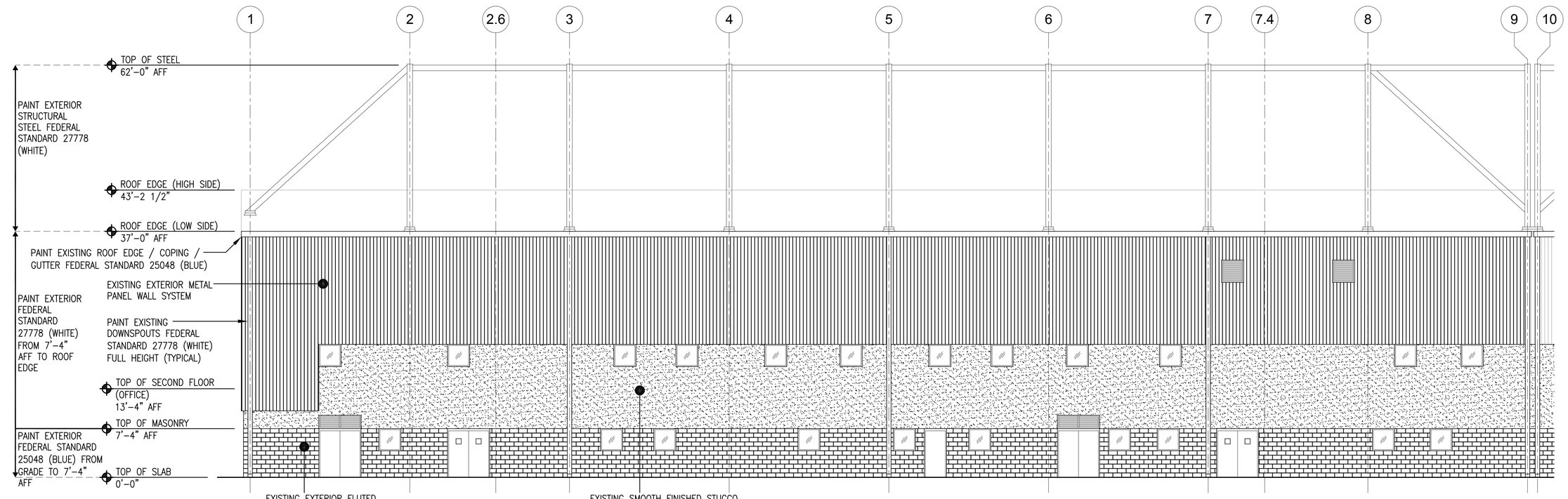

A SOUTH ELEVATION - AREA D
SCALE: 1/8" = 1'-0"

A-114

SYM	DESCRIPTION	DATE	APPR
1	FINAL SUBMISSION	5/2/2016	

NAVFAC

COMMONWEALTH OF VIRGINIA
DARRYL R. TREVILLIAN
Lic. No. 7644
5-2-16
SEAL

the PROTECTION ENGINEERING GROUP
14585 Avion Parkway, Suite 150 703-488-9990
Chantilly, Virginia 20151 fax: 703-488-9994
www.PEGroup-Inc.com

Baskervill
101 S 18th St
Ste 200 • 23219
Richmond, Va
804 348 1010
baskervill.com
A/E INFO

APPROVED 5/10/16
FOR COMMANDER NAVFAC
ACTIVITY
SATISFACTORY TO
DES JWT DRW DN CHK DRT
PM/DM KPL/IAS
BRANCH MANAGER
CHIEF ENG/ARCH Mark J. Airaghi, PE
FIRE PROTECTION DPS

DEPARTMENT OF THE NAVY
NAVAL FACILITIES ENGINEERING COMMAND
HAMPTON ROADS IPT
NAVAL FACILITIES ENGINEERING COMMAND – MID-ATLANTIC
NAS OCEANA – VIRGINIA BEACH, VIRGINIA
NAVAL AIR STATION OCEANA
VIRGINIA BEACH, VIRGINIA
HANGAR 111 FIRE PROTECTION AND STRUCTURAL REPAIRS
EXTERIOR BUILDING ELEVATIONS

SCALE: AS SHOWN
EPROJECT NO.: 1372146
CONSTR. CONTR. NO.
NAVFAC DRAWING NO. 12716300
SHEET 78 OF 170
A-201
DRAWFORM REVISION: 10 MAY 2014

FILE NAME: J:\(HD)\2-1503390 - Oceana Naval Air Station-R111 Hanger Mod\E_Drawings\Arch\1372146_A201 Elevations.dwg LAYOUT NAME: Plot Final PLOTTED: Thursday, April 14, 2016 - 3:35pm USER: dtj2

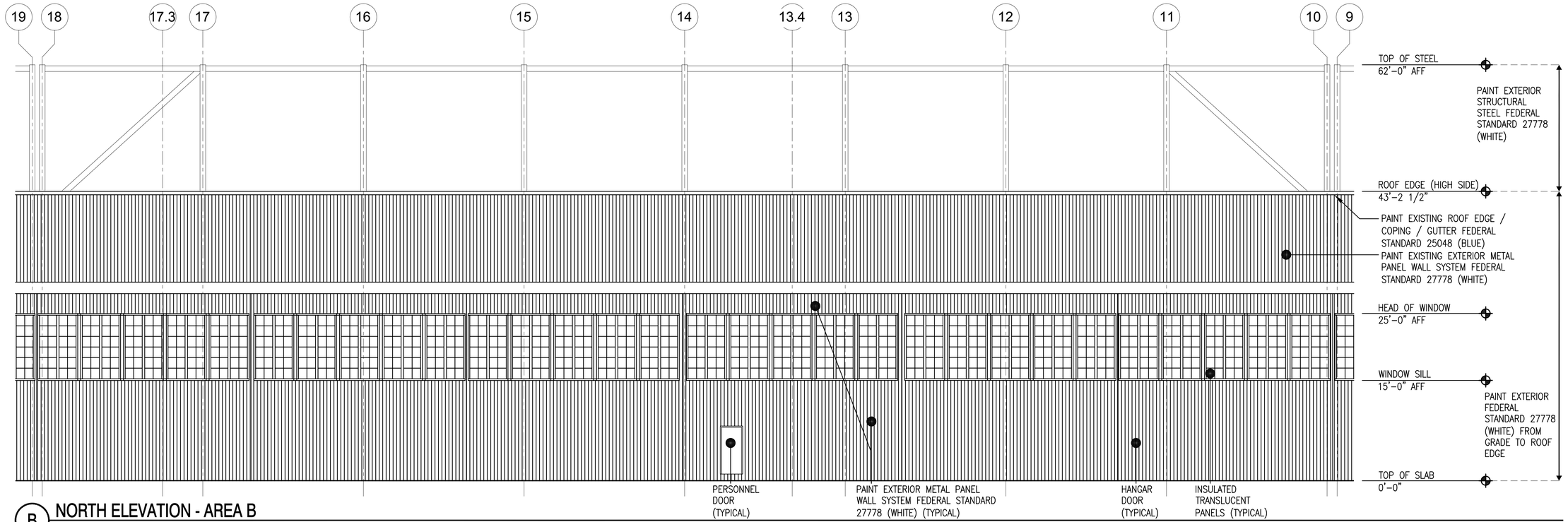

B NORTH ELEVATION - AREA B
SCALE: 1/8" = 1'-0"

A-112

A SOUTH ELEVATION - AREA E
SCALE: 1/8" = 1'-0"

A-115

SYM	DESCRIPTION	DATE	APPR
1	FINAL SUBMISSION	5/2/2016	

NAVFAC

COMMONWEALTH OF VIRGINIA
DARRYL R. TREVILLIAN
Lic. No. 7644
5-2-16
SEAL

the PROTECTION ENGINEERING GROUP
14585 Avion Parkway, Suite 150 703-488-9990
Chantilly, Virginia 20151 fax: 703-488-9994
www.PEGroup-Inc.com

Baskervill
101 S 18th St
Ste 200 - 23219
Richmond, Va
804 648 1010
baskervill.com
A/E INFO

APPROVED
5/1/16
FOR COMMANDER NAVFAC
ACTIVITY
SATISFACTORY TO
DES JWT DRW DN CHK DRT
PM/DM KPL/IAS
BRANCH MANAGER
CHIEF ENG/ARCH Mark J. Airaghi, PE
FIRE PROTECTION DPS

DEPARTMENT OF THE NAVY
NAVAL FACILITIES ENGINEERING COMMAND
NAVAL FACILITIES ENGINEERING COMMAND – MID-ATLANTIC
NAS OCEANA – VIRGINIA BEACH, VIRGINIA
HAMPTON ROADS IPT
NAVAL AIR STATION OCEANA
VIRGINIA BEACH, VIRGINIA

HANGAR 111 FIRE PROTECTION AND STRUCTURAL REPAIRS

EXTERIOR BUILDING ELEVATIONS

SCALE: AS SHOWN
EPROJECT NO.: 1372146
CONSTR. CONTR. NO.
NAVFAC DRAWING NO.
12716301
SHEET 79 OF 170

A-202

DRAWFORM REVISION: 10 MAY 2014

FILE NAME: J:\GHD\2-1503390 - Oceana Naval Air Station-R111 Hanger Mod\E_Drawings\Arch\1372146_A202 Elevations.dwg LAYOUT NAME: Plot Final PLOTTED: Thursday, April 14, 2016 - 3:35pm USER: dtj2

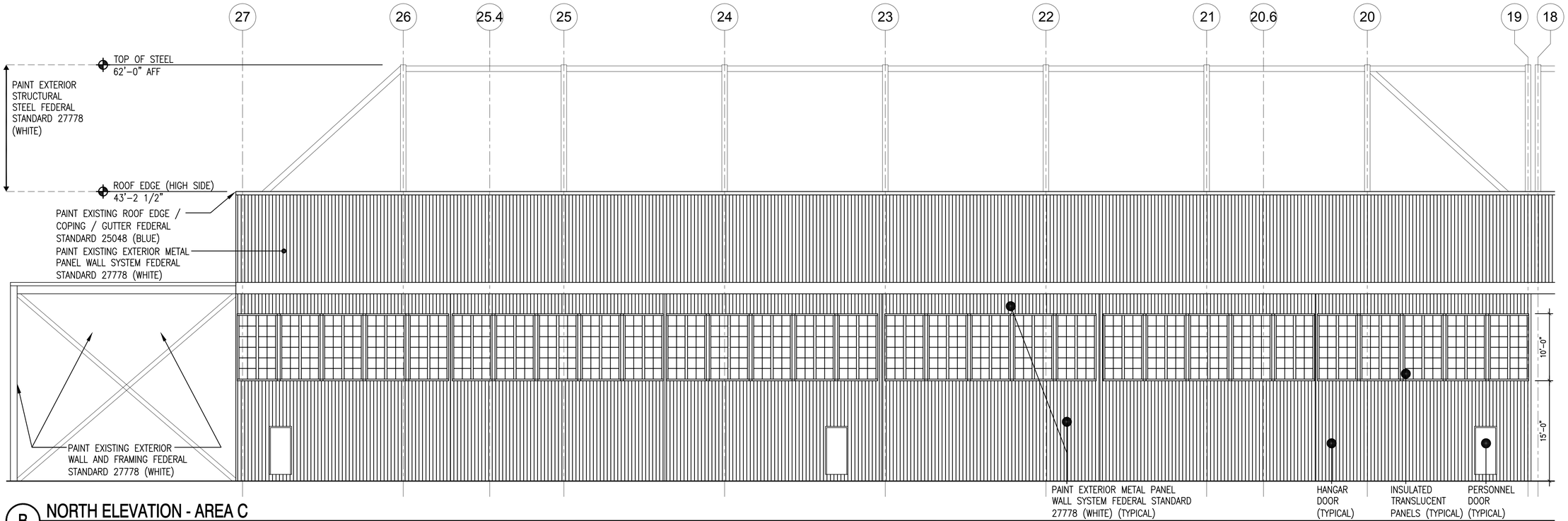

B NORTH ELEVATION - AREA C
SCALE: 1/8" = 1'-0"

A-113

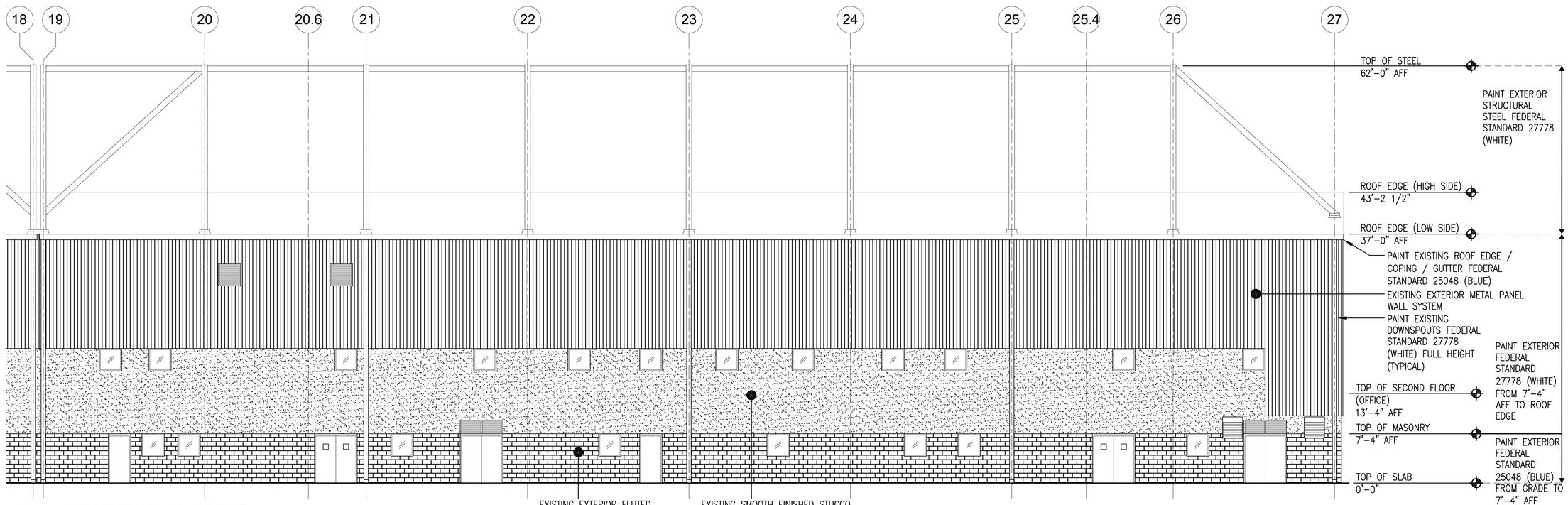

A SOUTH ELEVATION - AREA F
SCALE: 1/8" = 1'-0"

A-116

SYM	DESCRIPTION	DATE	APPR
1	FINAL SUBMISSION	5/2/2016	

NAVFAC

COMMONWEALTH OF VIRGINIA
DARRYL R. TREVILLIAN
Lic. No. 7644
5-2-16
SEAL

the PROTECTION ENGINEERING GROUP
14585 Avion Parkway, Suite 150 703-488-9990
Chantilly, Virginia 20151 fax: 703-488-9994
www.PEGroup-Inc.com

Baskervill
101 S 18th St
Ste 200 - 23219
Richmond, Va
804 648 1910
baskervill.com
A/E INFO

APPROVED 5/10/16
FOR COMMANDER NAVFAC
ACTIVITY
SATISFACTORY TO
DES JWT DRW DN CHK DRT
PM/DM KPL/IAS
BRANCH MANAGER
CHIEF ENG/ARCH Mark J. Airaghi, PE
FIRE PROTECTION DPS

DEPARTMENT OF THE NAVY
NAVAL FACILITIES ENGINEERING COMMAND
HAMPTON ROADS IPT
NAVAL FACILITIES ENGINEERING COMMAND – MID-ATLANTIC
IAS OCEANA – VIRGINIA BEACH, VIRGINIA
NAVAL AIR STATION OCEANA
VIRGINIA BEACH, VIRGINIA

HANGAR 111 FIRE PROTECTION AND STRUCTURAL REPAIRS

EXTERIOR BUILDING ELEVATIONS

SCALE: AS SHOWN
EPROJECT NO.: 1372146
CONSTR. CONTR. NO.
NAVFAC DRAWING NO. 12716302
SHEET 80 OF 170

A-203

DRAWFORM REVISION: 10 MAY 2014

FILE NAME: J:\(HD)\2.1503390 - Oceana Naval Air Station-R111 Hanger Mod\E_Drawings\Arch\1372146_A203 Elevations.dwg LAYOUT NAME: Plot Final PLOTTED: Thursday, April 14, 2016 - 3:35pm USER: dtj2

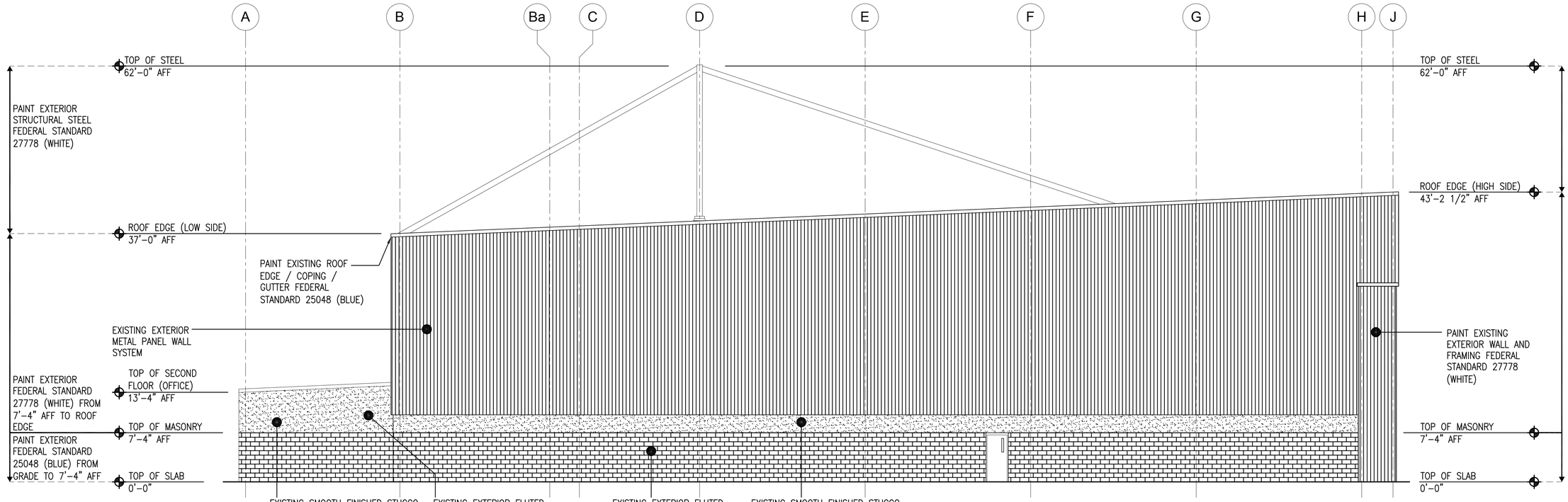

B EAST ELEVATION - AREA C / F

SCALE: 1/8" = 1'-0"

A-113 / A-116

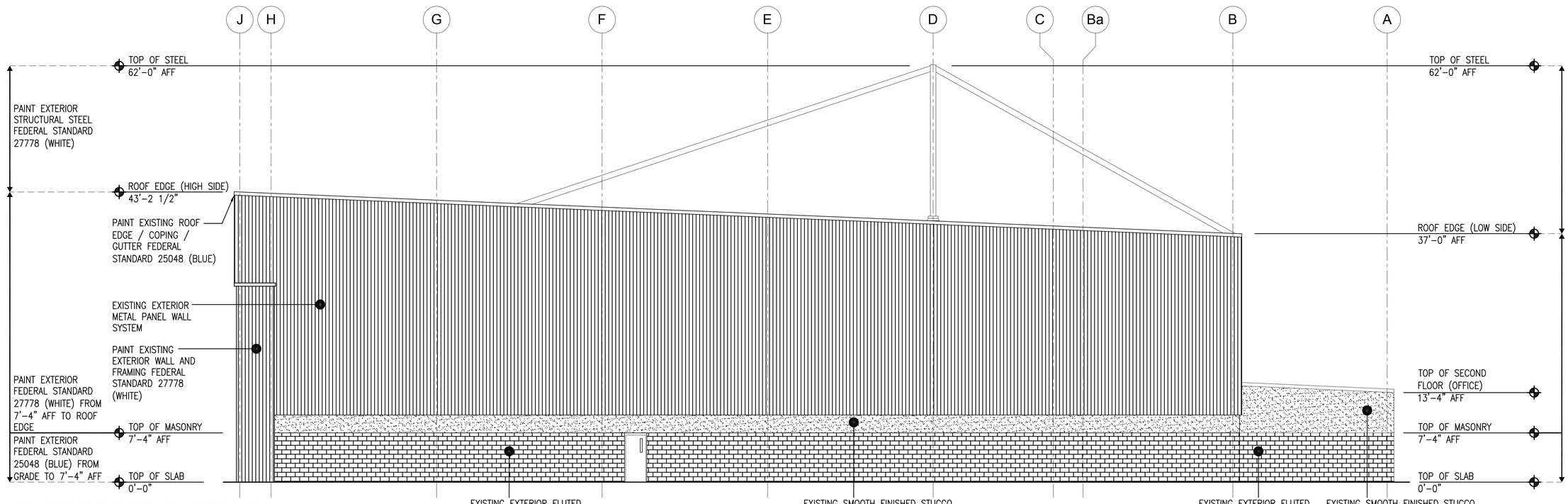

A WEST ELEVATION - AREA A / D

SCALE: 1/8" = 1'-0"

A-111 / A-114

STM	DESCRIPTION	DATE	APPR
1	FINAL SUBMISSION	5/2/2016	

NAVFAC

COMMONWEALTH OF VIRGINIA
DARRYL R. TREVILLIAN
Lic. No. 7644
5-2-16
SEAL

the PROTECTION ENGINEERING GROUP
14585 Avion Parkway, Suite 150 703-488-9900
Chantilly, Virginia 20151 fax: 703-488-9994
www.PEGroup-Inc.com

Baskervill
101 S 18th St
Ste 200 - 23219
Richmond, Va
804 343 1010
baskervill.com
A/E INFO

APPROVED 5/10/16
FOR COMMANDER NAVFAC
ACTIVITY
SATISFACTORY TO
DES JWT DRW DN CHK DRT
PM/DM KPL/IAS
BRANCH MANAGER
CHIEF ENG/ARCH Mark J. Airaghi, PE
FIRE PROTECTION DPS

DEPARTMENT OF THE NAVY
NAVAL FACILITIES ENGINEERING COMMAND
HAMPTON ROADS DIV
NAVAL FACILITIES ENGINEERING COMMAND – MID-ATLANTIC
NAS OCEANA – VIRGINIA BEACH, VIRGINIA
NAVAL AIR STATION OCEANA
VIRGINIA BEACH, VIRGINIA

HANGAR 111 FIRE PROTECTION AND STRUCTURAL REPAIRS

EXTERIOR BUILDING ELEVATIONS

SCALE: AS SHOWN
EPROJECT NO.: 1372146
CONSTR. CONTR. NO.
NAVFAC DRAWING NO. 12716303
SHEET 81 OF 170

A-204

DRAWFORM REVISION: 10 MAY 2014

FILE NAME: J:\(HD)\2-1503390 - Oceana Naval Air Station-R111 Hanger Mod\E_Drawings\Arch\1372146_A204 Elevations.dwg LAYOUT NAME: Plot Final PLOTTED: Thursday, April 14, 2016 - 3:34pm USER: dtl2

NOTE: THE CONTRACTOR IS RESPONSIBLE FOR DESIGNING THE TEMPORARY SHORING AND FIELD ADJUSTING THE PARTITION LOCATION AS REQUIRED FOR PHASING CONSTRUCTION

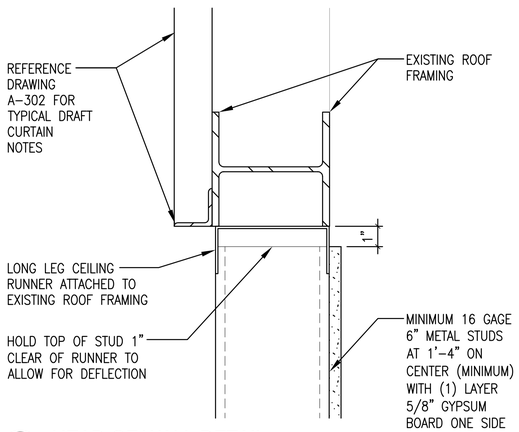

C HEAD OF WALL DETAIL

SCALE: 3" = 1'–0" A–301

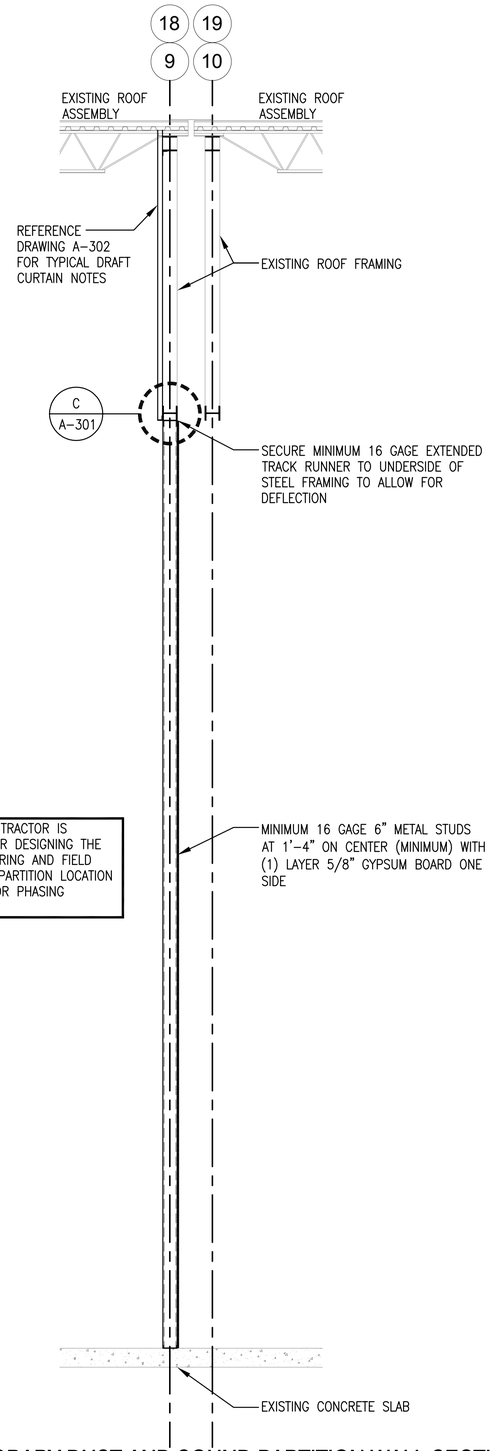

NOTE: THE CONTRACTOR IS RESPONSIBLE FOR DESIGNING THE TEMPORARY SHORING AND FIELD ADJUSTING THE PARTITION LOCATION AS REQUIRED FOR PHASING CONSTRUCTION

B TEMPORARY DUST AND SOUND PARTITION WALL SECTION

SCALE: 3/8" = 1'–0" A–111 / A–112 / A–113

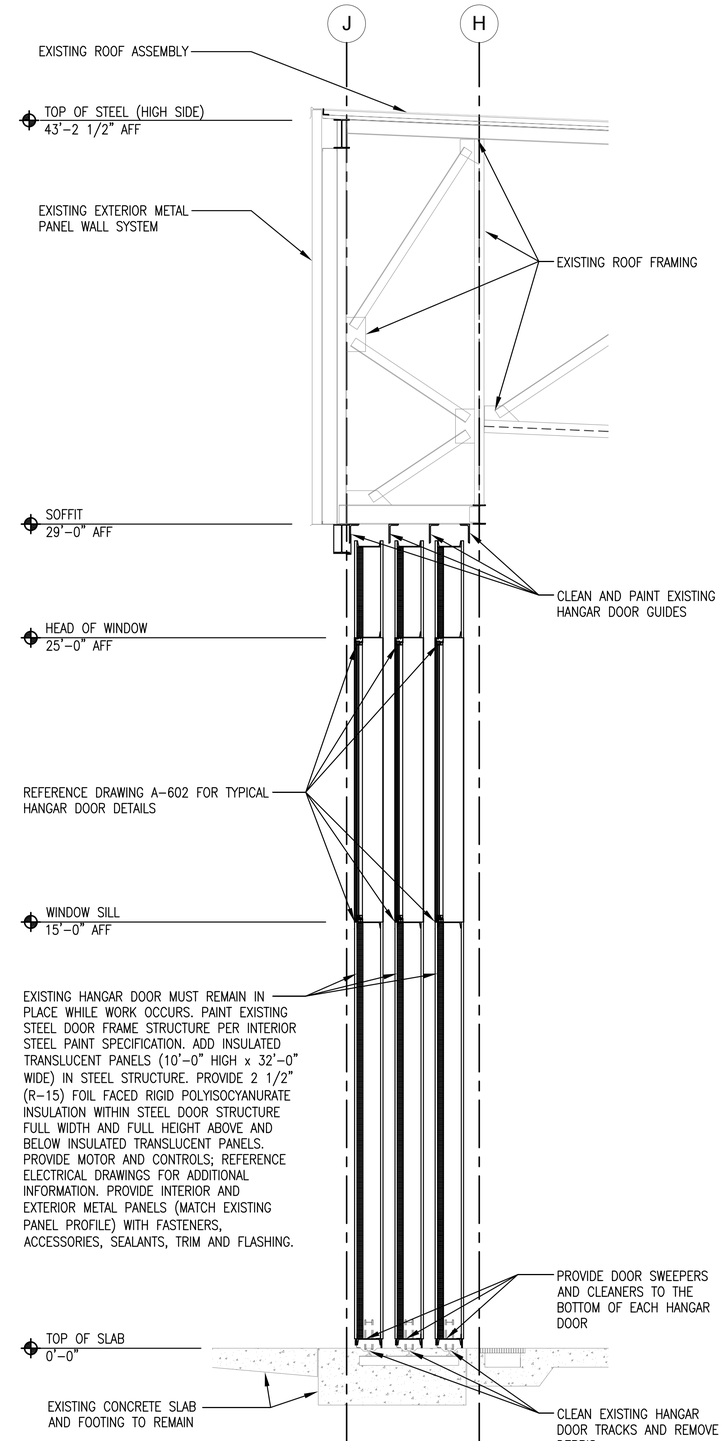

A HANGAR DOOR SECTION

SCALE: 3/8" = 1'–0" A–111 / A–112 / A–113

CAUTION: IF THIS PLAN IS A REDUCTION, GRAPHIC SCALE MUST BE USED

0 1'–4" 2'–8" 5'–4"

3/8" = 1'–0

0 2" 4" 8"

3" = 1'–0

SYM	DESCRIPTION	DATE	APPR
1	FINAL SUBMISSION	5/2/2016	

NAVFAC

COMMONWEALTH OF VIRGINIA
DARRYL R. TREVILLIAN
Lic. No. 7644
5/2/16
SEAL

the PROTECTION ENGINEERING GROUP
14585 Avion Parkway, Suite 150 703-488-9900
Chantilly, Virginia 20151 fax: 703-488-9994
www.PEGroup-Inc.com

Baskervill
101 S 18th St
Ste 200 • 23219
Richmond, Va
804 343 1010
baskervill.com
A/E INFO.

APPROVED 5/10/16
FOR COMMANDER NAVFAC
ACTIVITY
SATISFACTORY TO

DES	JMT	DRW	DN	CHK	DRT

PM/DM KPL/IAS
BRANCH MANAGER
CHIEF ENG/ARCH Mark J. Airaghi, PE
FIRE PROTECTION DPS

DEPARTMENT OF THE NAVY
NAVAL FACILITIES ENGINEERING COMMAND ~ MID-ATLANTIC
NAVAL FACILITIES ENGINEERING COMMAND
HAMPTON ROADS IPT
NAS OCEANA ~ VIRGINIA BEACH, VIRGINIA
NAVAL AIR STATION OCEANA
VIRGINIA BEACH, VIRGINIA

HANGAR 111 FIRE PROTECTION AND STRUCTURAL REPAIRS

WALL SECTIONS

SCALE: AS SHOWN
EPROJECT NO.: 1372146
CONSTR. CONTR. NO.
NAVFAC DRAWING NO. 12716304
SHEET 82 OF 170

A-301

DRAWFORM REVISION: 10 MAY 2014

FILE NAME: J:\GHD\2.1503390 – Oceana Naval Air Station–R111 Hanger Mod\E_Drawings\Arch\1372146_A301 Wall Sections.dwg LAYOUT NAME: Plot Final PLOTTED: Thursday, April 14, 2016 – 3:34pm USER: dtj2

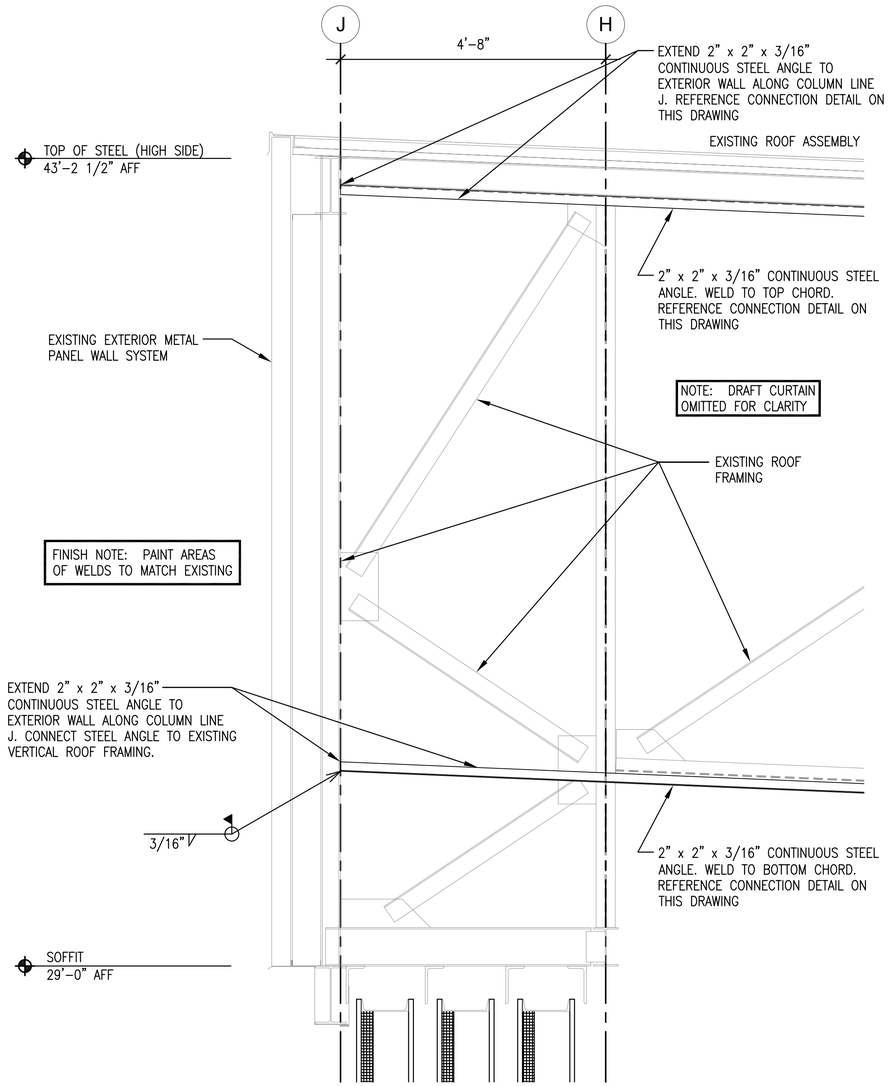

B DRAFT CURTAIN FRAMING ELEVATION AT COLUMN LINES H AND J

SCALE: 3/4" = 1'–0"

A–302

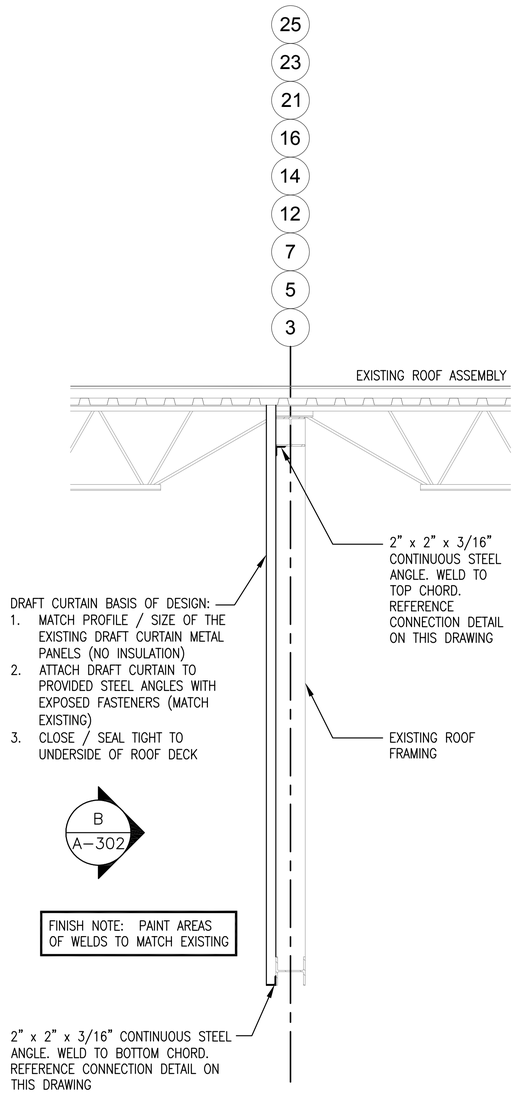

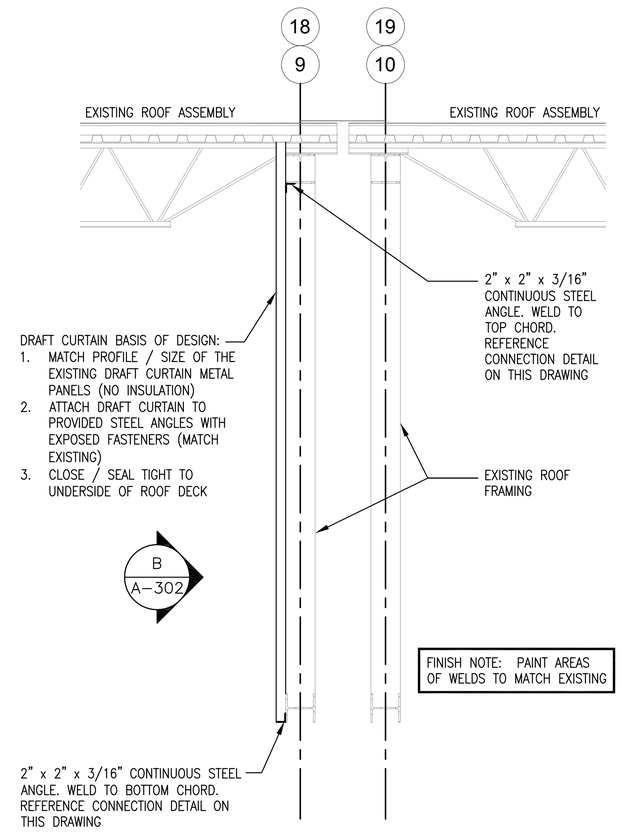

A DRAFT CURTAIN SECTION

SCALE: 3/4" = 1'–0"

A–121 / A–122 / A–123 / A–301

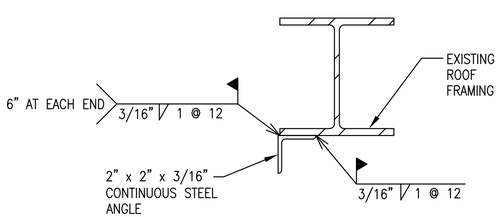

TOP CHORD

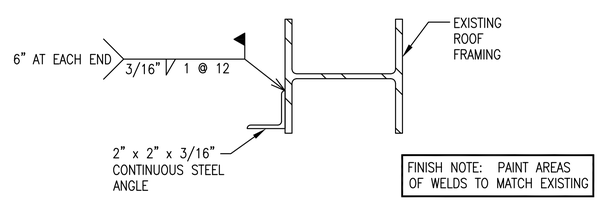

BOTTOM CHORD

C TYPICAL DRAFT CURTAIN STEEL CONNECTION DETAILS

SCALE: 3" = 1'–0"

A–302

CAUTION: IF THIS PLAN IS A REDUCTION, GRAPHIC SCALE MUST BE USED

0 8" 1'–4" 2'–8"
3/4" = 1'–0

0 2" 4" 8"
3" = 1'–0

SYM	DESCRIPTION	DATE	APPR
1	FINAL SUBMISSION	5/2/2016	

NAVFAC

COMMONWEALTH OF VIRGINIA
DARRYL R. TREVILLIAN
Lic. No. 7644
5-2-16
SEAL

the PROTECTION ENGINEERING GROUP
14585 Avion Parkway, Suite 150 703-488-9900
Chantilly, Virginia 20151 fax: 703-488-9994
www.PEGroup-Inc.com

Baskervill
101 S 18th St
Ste 300 - 23219
Richmond, Va
804 648 1910
baskervill.com
A/E INFO

APPROVED 5/10/16
FOR COMMANDER NAVFAC
ACTIVITY
SATISFACTORY TO
DES JWT DRW DN CHK DRT
PM/DM KPL/IAS
BRANCH MANAGER
CHIEF ENG/ARCH Mark J. Airaghi, PE
FIRE PROTECTION DPS

DEPARTMENT OF THE NAVY
NAVAL FACILITIES ENGINEERING COMMAND
HAMPTON ROADS IPT
NAVAL FACILITIES ENGINEERING COMMAND ~ MID-ATLANTIC
NAS OCEANA ~ VIRGINIA BEACH, VIRGINIA
NAVAL AIR STATION OCEANA
VIRGINIA BEACH, VIRGINIA
HANGAR 111 FIRE PROTECTION AND STRUCTURAL REPAIRS
DRAFT CURTAIN SECTIONS AND DETAILS

SCALE: AS SHOWN
EPROJECT NO.: 1372146
CONSTR. CONTR. NO.
NAVFAC DRAWING NO. 12716305
SHEET 83 OF 170
A-302

DRAWFORM REVISION: 10 MAY 2014

FILE NAME: J:\GHD\2-1503390 - Oceana Naval Air Station-R111 Hanger Mod\E_Drawings\Arch\1372146_A302 Wall Sections.dwg LAYOUT NAME: Plot Final PLOTTED: Thursday, April 14, 2016 - 3:33pm USER: dtj2

DOOR AND FRAME TYPES

(T) = TEMPERED (W) = WIRED SAFETY GLAZING (P) = INSULATED TRANSLUCENT PANEL

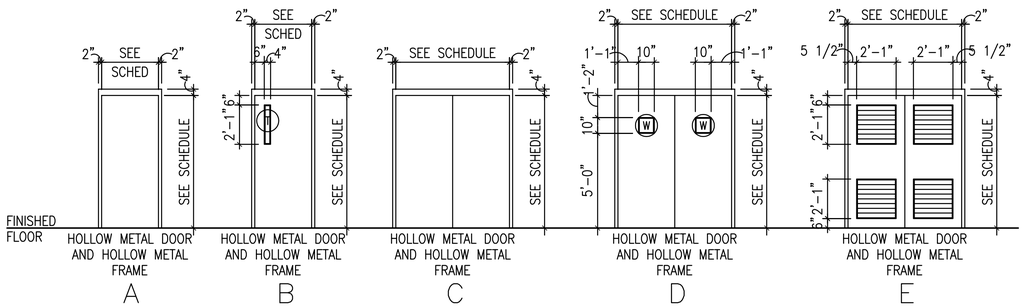

DOOR AND FRAME BID OPTION NOTES

EXISTING EXTERIOR PERSONNEL DOORS: EXISTING DOORS AND FRAMES TO REMAIN.
BID OPTION: REMOVE EXISTING DOOR, DOOR FRAME AND DOOR HARDWARE COMPLETE. CLEAN, PATCH AND PREPARE EXISTING OPENING TO RECEIVE DOOR AND FRAME ASSEMBLY. REFERENCE ARCHITECTURAL FLOOR PLANS AND DOOR SCHEDULE FOR ADDITIONAL INFORMATION. REFERENCE ENVIRONMENT DOCUMENTS FOR ADDITIONAL INFORMATION AND DOOR / DOOR FRAME RECYCLING PROCEDURES.

DOD ANTITERRORISM STANDARD BASIS OF DESIGN:
DOOR, DOOR FRAME, FASTENERS AND ANCHORAGE MUST MEET ASTM 2247 AND ASTM F2927

DOOR SCHEDULE

DOOR NO.	DOOR					FRAME				HARDWARE TYPE	RATING	COMMENTS
	TYPE	WIDTH	HEIGHT	MATERIAL	FINISH	TYPE	MATERIAL	FINISH	DETAIL			
100A	B	3'–0"	7'–0"	HM	––	B	HM	––	A/A601	––	––	––
100B	C	6'–0"	7'–0"	HM	––	C	HM	––	A/A601	––	––	PAIR OF 3'–0" X 7'–0" DOORS
100C	D	6'–0"	7'–0"	HM	––	D	HM	––	A/A601	––	––	PAIR OF 3'–0" X 7'–0" DOORS / MUST MEET DOD ANTITERRORISM STANDARDS
100D	A	3'–0"	7'–0"	HM	––	A	HM	––	A/A601	––	––	––
100E	C	6'–0"	7'–0"	HM	––	C	HM	––	A/A601	––	––	PAIR OF 3'–0" X 7'–0" DOORS
100F	D	6'–0"	7'–0"	HM	––	D	HM	––	A/A601	––	––	PAIR OF 3'–0" X 7'–0" DOORS / MUST MEET DOD ANTITERRORISM STANDARDS
100G	A	3'–0"	7'–0"	HM	––	A	HM	––	A/A601	––	––	––
100H	C	6'–0"	7'–0"	HM	––	C	HM	––	A/A601	––	––	PAIR OF 3'–0" X 7'–0" DOORS
100J	D	6'–0"	7'–0"	HM	––	D	HM	––	A/A601	––	––	PAIR OF 3'–0" X 7'–0" DOORS / MUST MEET DOD ANTITERRORISM STANDARDS
100K	E	6'–0"	7'–0"	HM	––	E	HM	––	A/A601	––	––	PAIR OF 3'–0" X 7'–0" DOORS
100L	E	6'–0"	7'–0"	HM	––	E	HM	––	A/A601	––	––	PAIR OF 3'–0" X 7'–0" DOORS
100M	E	6'–0"	7'–0"	HM	––	E	HM	––	A/A601	––	––	PAIR OF 3'–0" X 7'–0" DOORS
100N	E	6'–0"	7'–0"	HM	––	E	HM	––	A/A601	––	––	PAIR OF 3'–0" X 7'–0" DOORS
100P	A	3'–0"	7'–0"	HM	––	A	HM	––	A/A601	––	––	––
100Q	D	6'–0"	7'–0"	HM	––	D	HM	––	A/A601	––	––	PAIR OF 3'–0" X 7'–0" DOORS / MUST MEET DOD ANTITERRORISM STANDARDS
100R	C	6'–0"	7'–0"	HM	––	C	HM	––	A/A601	––	––	PAIR OF 3'–0" X 7'–0" DOORS
100S	A	3'–0"	7'–0"	HM	––	A	HM	––	A/A601	––	––	––
100T	D	6'–0"	7'–0"	HM	––	D	HM	––	A/A601	––	––	PAIR OF 3'–0" X 7'–0" DOORS / MUST MEET DOD ANTITERRORISM STANDARDS
100U	C	6'–0"	7'–0"	HM	––	C	HM	––	A/A601	––	––	PAIR OF 3'–0" X 7'–0" DOORS
100V	B	3'–0"	7'–0"	HM	––	B	HM	––	A/A601	––	––	––
101A	A	3'–0"	7'–0"	HM	––	A	HM	––	B/A601	––	––	––

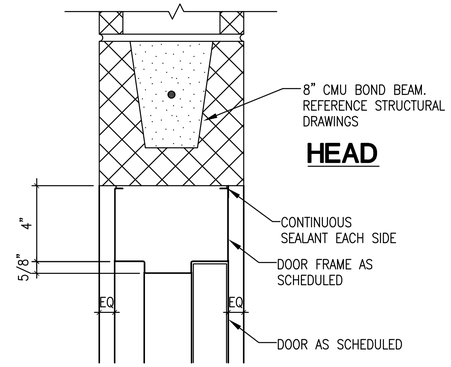

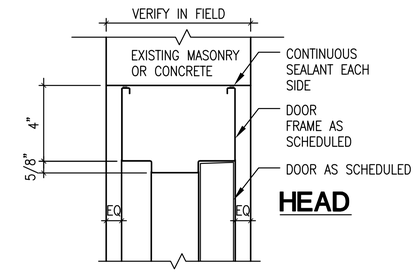

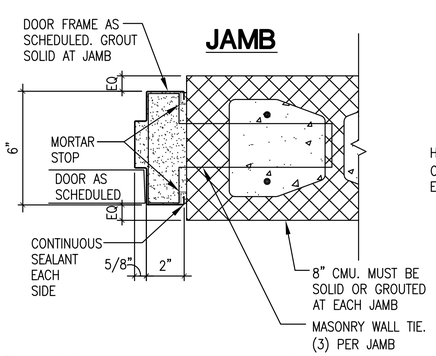

B DOOR DETAILS AT NEW WORK WALL
SCALE: 3" = 1'–0" A–601

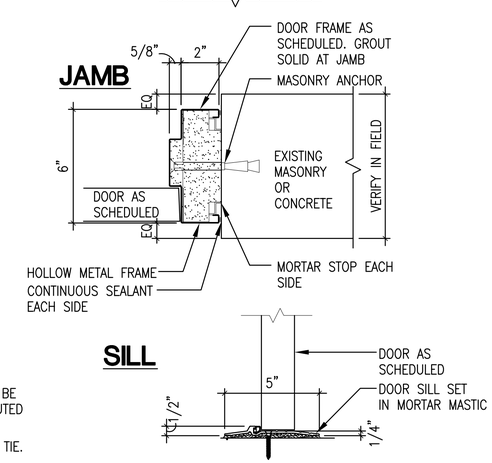

A DOOR DETAILS AT EXISTING WALL
SCALE: 3" = 1'–0" A–601

CAUTION: IF THIS PLAN IS A REDUCTION, GRAPHIC SCALE MUST BE USED

0 2" 4" 8"
3" = 1'–0

SYM	DESCRIPTION	DATE	APPR
1	FINAL SUBMISSION	5/2/2016	

NAVFAC

COMMONWEALTH OF VIRGINIA
DARRYL R. TREVILLIAN
Lic. No. 7644
5.2.16
SEAL

the PROTECTION ENGINEERING GROUP
14585 Avion Parkway, Suite 150 703-488-9990
Chantilly, Virginia 20151 fax: 703-488-9994
www.PEGroup-Inc.com

Baskervill
101 S 18th St
Ste 200 - 23219
Richmond, Va
804 648 1910
baskervill.com
A/E INFO

APPROVED 5/11/16
FOR COMMANDER NAVFAC
ACTIVITY
SATISFACTORY TO
DES JWT DRW DN CHK DRT
PM/DM KPL/IAS
BRANCH MANAGER
CHIEF ENG/ARCH Mark J. Airaghi, PE
FIRE PROTECTION DPS

DEPARTMENT OF THE NAVY
NAVAL FACILITIES ENGINEERING COMMAND
HAMPTON ROADS IPT
NAVAL FACILITIES ENGINEERING COMMAND ~ MID-ATLANTIC
NAS OCEANA ~ VIRGINIA BEACH, VIRGINIA
NAVAL AIR STATION OCEANA
VIRGINIA BEACH, VIRGINIA
HANGAR 111 FIRE PROTECTION AND STRUCTURAL REPAIRS
DOOR SCHEDULE AND DOOR DETAILS

SCALE: AS SHOWN
EPROJECT NO.: 1372146
CONSTR. CONTR. NO.
NAVFAC DRAWING NO. 12716306
SHEET 84 OF 170
A-601

DRAWFORM REVISION: 10 MAY 2014

FILE NAME: J:\GHD\2-1503390 - Oceana Naval Air Station-R111 Hanger Mod\E_Drawings\Arch\1372146_A601 Door Schedule.dwg LAYOUT NAME: Plot Final PLOTTED: Thursday, April 14, 2016 - 3:33pm USER: dtj2

SLIDING STEEL HANGAR DOOR BASIS OF DESIGN:
1. 18 HANGAR DOORS TOTAL
2. PROVIDE STEEL FRAMING AT EACH SILL CONDITION (32 FEET LONG)
3. PROVIDE STEEL FRAMING AT EACH HEAD CONDITION (32 FEET LONG)
4. PROVIDE STEEL FRAMING AT EACH JAMB CONDITION (10 FEET LONG)

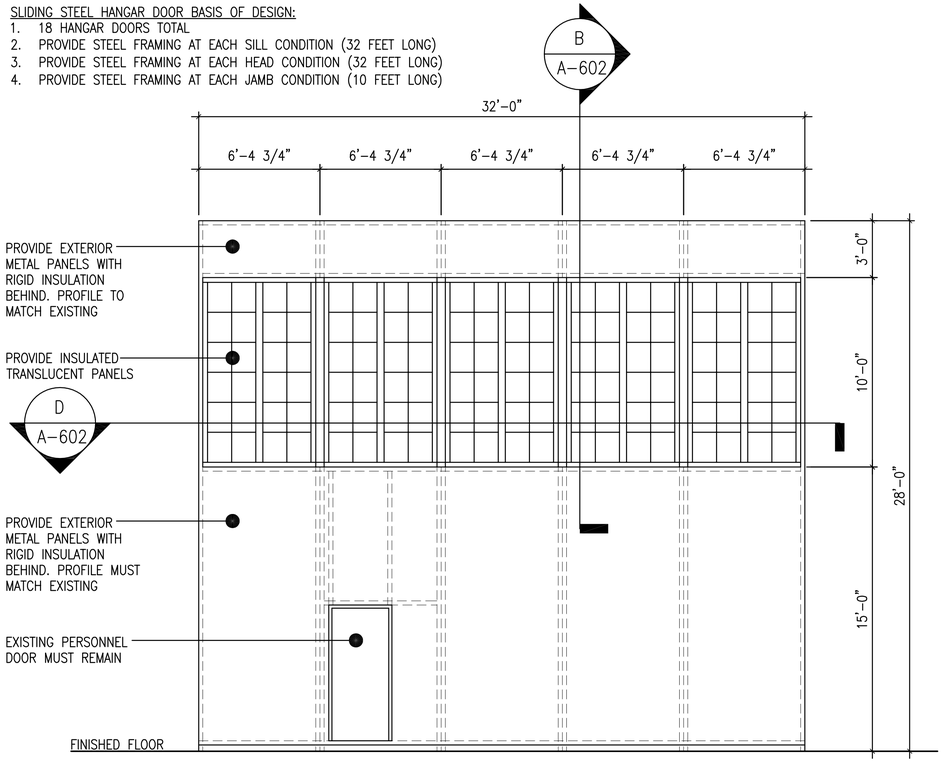

A TYPICAL HANGAR DOOR PANEL - EXTERIOR ELEVATION
SCALE: 1/4" = 1'-0"
A-601

HANGAR DOOR FRAME MODIFICATION NOTE: THE HANGAR DOOR STEEL ASSEMBLIES SHOWN ON THE DRAWINGS ARE CONCEPTUAL ONLY. THESE GENERAL DETAILS INDICATE THE SIZES OF STRUCTURAL MEMBERS AND SIZE OF WELDS BASED ON EXISTING AS-BUILT DOCUMENTATION. VERIFY THESE SIZES IN THE FIELD. DESIGN AND DETAIL CONNECTIONS AND DETAILS BY THE STEEL FABRICATOR. PERFORM DETAILING USING RATIONAL ENGINEERING DESIGN AND STANDARD PRACTICE IN ACCORDANCE WITH THE CONTRACT DOCUMENTS. PRIOR TO ORDER THE FABRICATION OF THE STEEL ASSEMBLIES, SUBMIT SHOP DRAWINGS DEVELOPED BY A VIRGINIA REGISTERED PROFESSIONAL ENGINEER, IN ACCORDANCE WITH PROJECT SPECIFICATIONS FOR GOVERNMENT REVIEW AND APPROVAL.

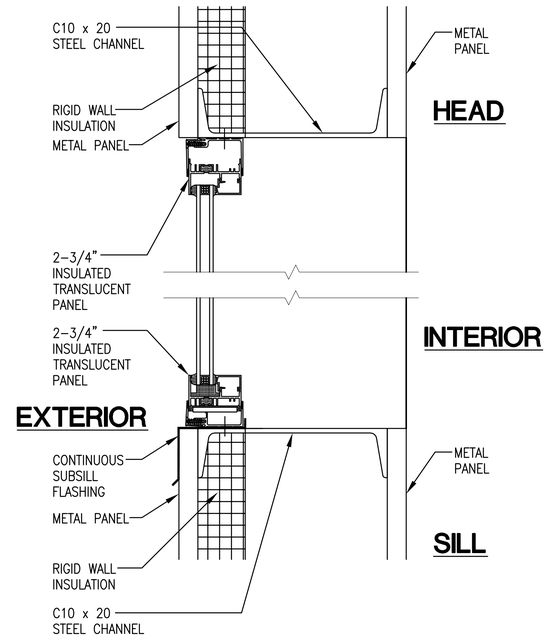

B INSULATED TRANSLUCENT PANEL DETAILS
SCALE: 3" = 1'-0"
A-602

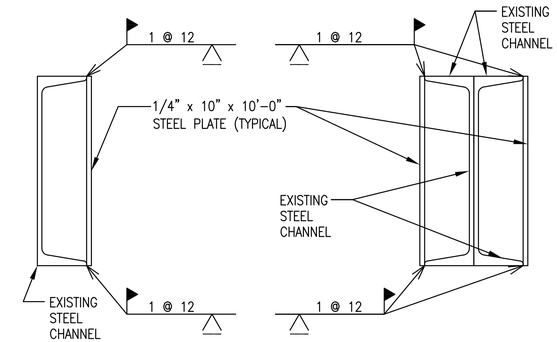

STEEL PLATE TO STEEL CHANNEL CONNECTION AT JAMB CONDITIONS

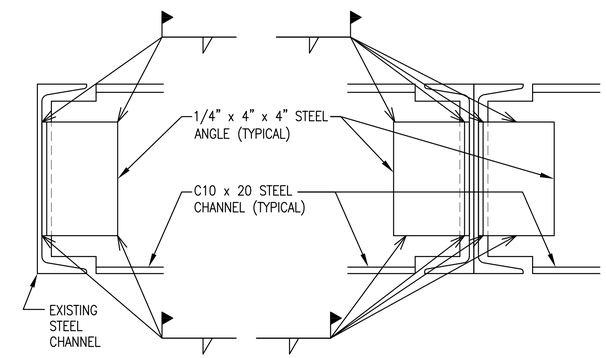

STEEL CHANNEL TO STEEL CHANNEL CONNECTION AT HEAD / SILL CONDITIONS

C TYPICAL HANGAR DOOR STEEL CONNECTION DETAILS
SCALE: 3" = 1'-0"
A-602

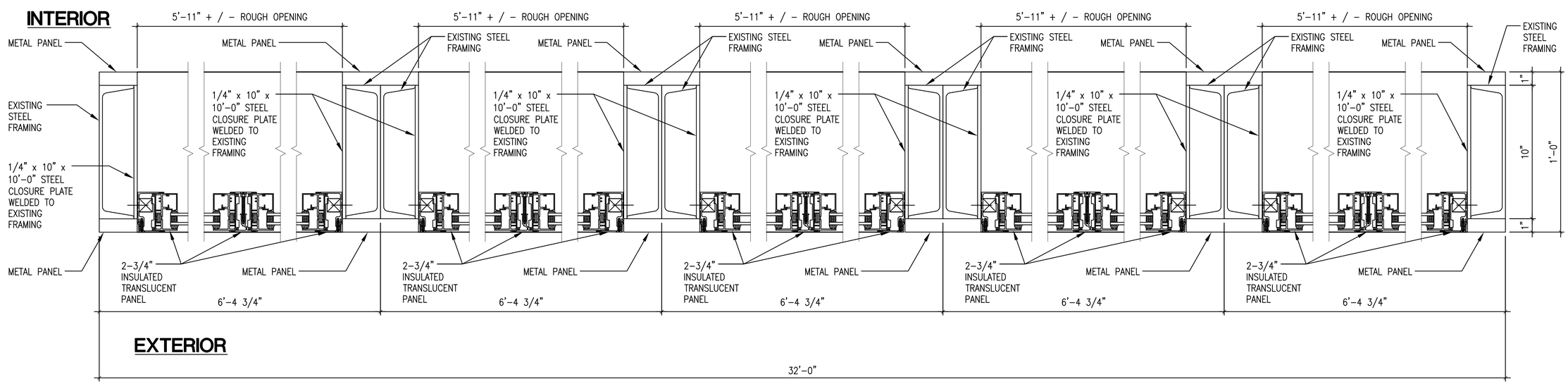

D INSULATED TRANSLUCENT PANEL DETAILS
SCALE: 3" = 1'-0"
A-602

SYM	DESCRIPTION	DATE	APPR
1	FINAL SUBMISSION	5/2/2016	

NAVFAC

COMMONWEALTH OF VIRGINIA
DARRYL R. TREVILLIAN
Lic. No. 7644
5-2-16
SEAL

the PROTECTION ENGINEERING GROUP
14585 Avion Parkway, Suite 150 703-488-9995
Chantilly, Virginia 20151 fax: 703-488-9994
www.PEGroup-Inc.com

Baskervill
101 S 18th St
Ste 200 - 23219
Richmond, Va
804 343 1010
baskervill.com
A/E INFO

APPROVED 5/2/16
FOR COMMANDER NAVFAC
ACTIVITY
SATISFACTORY TO
DES JWT DRW DN CHK DRT
PM/DM KPL/IAS
BRANCH MANAGER
CHIEF ENG/ARCH Mark J. Airaghi, PE
FIRE PROTECTION DPS

DEPARTMENT OF THE NAVY
NAVAL FACILITIES ENGINEERING COMMAND
HAMPTON ROADS PPT
NAVAL FACILITIES ENGINEERING COMMAND – MID-ATLANTIC
NAS OCEANA – VIRGINIA BEACH, VIRGINIA
NAVAL AIR STATION OCEANA
VIRGINIA BEACH, VIRGINIA
HANGAR 111 FIRE PROTECTION AND STRUCTURAL REPAIRS
HANGAR DOOR DETAILS

SCALE: AS SHOWN
EPROJECT NO.: 1372146
CONSTR. CONTR. NO.
NAVFAC DRAWING NO. 12716307
SHEET 85 OF 170
A-602
DRAWFORM REVISION: 10 MAY 2014

FILE NAME: J:\QHD\2-1503390 - Oceana Naval Air Station-R111 Hanger Mod\E_Drawings\Arch\1372146_A602 Door Details.dwg LAYOUT NAME: Plot Final PLOTTED: Wednesday, April 20, 2016 - 3:15pm USER: dtj2