GENERAL NOTES

1. THESE NOTES APPLY TO ALL CIVIL DRAWINGS.

2. TOPOGRAPHIC SURVEY PROVIDED BY BALDWIN & GREGG, LTD., DECEMBER 2009. IF CONTRACTOR DOES NOT ACCEPT EXISTING TOPOGRAPHY AS SHOWN ON THE PLANS, THEY SHALL BE RESPONSIBLE AT THEIR OWN EXPENSE TO OBTAIN A TOPOGRAPHIC SURVEY FROM A REGISTERED LAND SURVEYOR AND SUBMIT TO CONTRACTING OFFICER FOR REVIEW.

3. COORDINATES SHOWN HEREON ARE IN FEET AND REFERENCED TO VIRGINIA STATE PLAN COORDINATES, SOUTH ZONE, NORTH AMERICAN DATUM 1983 (NAD83).

4. ELEVATIONS SHOWN HEREON ARE IN FEET AND ARE REFERENCED TO NATIONAL GEODETIC VERTICAL DATUM 1929 (72 ADJUSTMENT)(NGVD 29 (72 ADJ)). ELEVATIONS WERE ADJUSTED TO NORFOLK NAVAL SHIPYARD DATUM BY ADDING 92.94.

   BENCH MARK: 433 ELEVATION: 10.776 (103.716)

5. THE LOCATIONS SHOWN FOR EXISTING UTILITIES ARE BASED ON AVAILABLE BASE UTILITY PLANS AND ABOVE GROUND STRUCTURES AND SHALL BE CONSIDERED APPROXIMATE. THE CONTRACTOR SHALL LOCATE ALL UNDERGROUND UTILITIES THROUGH THE USE OF A QUALIFIED UNDERGROUND UTILITY LOCATION SERVICE PRIOR TO ANY EXCAVATION. ALL UTILITIES LOCATED SHALL BE INDICATED ON THE "AS-BUILT" DRAWINGS. THE CONTRACTOR SHALL NOTIFY THE PWC UTILITIES OFFICE 72 HOURS PRIOR TO COMMENCING ANY DEMOLITION, EXCAVATION, OR CONSTRUCTION.

6. ALL VALVES, FITTINGS, MANHOLES, ETC. HAVE BEEN LOCATED IN PLAN AND DIMENSIONS SHOWN SHALL BE STRICTLY ADHERED TO UNLESS OTHERWISE DIRECTED BY THE CONTRACTING OFFICER. PROFILE STATIONING SHALL BE ADJUSTED AS REQUIRED TO CONFORM TO PLAN DIMENSIONS.

7. FLOOD DATA: 100-YEAR FLOOD ELEVATION = 103.00 (NNSY DATUM)
   500-YEAR FLOOD ELEVATION = 104.90 (NNSY DATUM)

8. ALL DIMENSIONS ARE IN FEET (FT) UNLESS OTHERWISE INDICATED.

9. ALL ITEMS DESIGNATED "VDOT" SHALL BE IN CONFORMANCE WITH THE VIRGINIA DEPARTMENT OF TRANSPORTATION 2008 ROAD AND BRIDGE STANDARDS. UNLESS OTHERWISE SPECIFIED, MATERIALS AND CONSTRUCTION OF SUCH STANDARD ITEMS ARE REFERENCED TO THE VIRGINIA DEPARTMENT OF TRANSPORTATION 2008 ROAD AND BRIDGE SPECIFICATIONS.

10. ALL MANHOLE AND INLET CASTINGS SHALL CONFORM TO APPLICABLE FEDERAL STANDARDS REFERENCED IN SPECIFICATIONS.

11. CONTRACTOR SHALL TAKE ALL NECESSARY PRECAUTIONS TO PROTECT EXISTING UTILITIES AND TO MAINTAIN UNINTERRUPTED UTILITY SERVICE. ANY DAMAGE INCURRED SHALL BE REPAIRED IMMEDIATELY TO THE SATISFACTION OF THE CONTRACTING OFFICER AT THE CONTRACTOR'S EXPENSE. THE CONTRACTOR SHALL NOTIFY THE CONTRACTING OFFICER A MINIMUM OF 15 DAYS IN ADVANCE OF ANY NECESSARY UTILITY OUTAGES.

12. THE ELIZABETH RIVER AT THE NORFOLK NAVAL SHIPYARD MEAN LOW WATER ELEVATION IS 93.43 FEET. THE MEAN HIGH WATER ELEVATION IS 96.18 FEET (NNSY DATUM).

13. THE CONTRACTOR'S LAYDOWN AREA SHALL BE AT THE DIRECTION OF THE CONTRACTING OFFICER, AND AS INDICATED ON SHT G-004.

14. ALL EROSION AND SEDIMENT CONTROL MEASURES SHALL BE IN ACCORDANCE WITH THE VIRGINIA EROSION AND SEDIMENT CONTROL HANDBOOK AND THE SPECIFICATIONS.

15. FOR EROSION AND SEDIMENT CONTROL NOTES AND CONSTRUCTION SEQUENCE, SEE SHT G-005.

16. NEW UTILITY STAKEOUT DIMENSIONS ARE TO CENTERLINE OF STRUCTURE AND CENTERLINE OF PIPE, UNLESS INDICATED OTHERWISE.

17. FOR BORING LOCATIONS, SEE SHTS B-101 AND B-108.

18. PROVIDE UNIFORM SLOPE BETWEEN INDICATED ELEVATIONS SO THAT ALL AREAS SLOPE TO DRAIN AND NO STORMWATER IS PONDED ON SITE BOTH DURING AND AFTER CONSTRUCTION.

19. FINISH GRADES SHOWN ON THESE DRAWINGS REFER TO TOP OF TOPSOIL, CONCRETE, ASPHALT OR CRUSHED ROCK SURFACING. ALLOW FOR THICKNESS OF TOPSOIL, CONCRETE, ASPHALT, ETC. WHEN ESTABLISHING SUBGRADE ELEVATIONS.

20. CONTRACTOR SHALL BE RESPONSIBLE FOR ALL LAYOUT AND ELEVATION CONTROL FOR THE PROJECT.

21. UNLESS NOTED OTHERWISE, ALL EXISTING FACILITIES ARE TO REMAIN UNDISTURBED AND USED IN PLACE. THE CONTRACTOR SHALL PROVIDE PROTECTIONS NECESSARY TO PREVENT DAMAGE. THE CONTRACTOR SHALL REPAIR AND/OR REPLACE, AT THEIR EXPENSE, ALL EXISTING FACILITIES DAMAGED DURING CONSTRUCTION ACTIVITIES. EXISTING FACILITIES NOTED FOR REMOVAL SHALL BE REMOVED AND DISPOSED OFF-SITE AT THE CONTRACTOR'S EXPENSE. ALL EXCESS MATERIAL RESULTING FROM EARTHWORK OPERATIONS SHALL BE DISPOSED OF AT THE CONTRACTOR'S EXPENSE. METHOD OF DISPOSAL OF MATERIAL AND LOCATION SHALL BE APPROVED BY CONTRACTING OFFICER.

22. YARD STRUCTURES, PIPE, CONDUIT, AND THEIR APPURTENANCES (INCLUDING MANHOLE COVERS AND FRAMES) SHALL BE PROVIDED TO RESIST AND SUPPORT THE MAXIMUM IMPARTED LOADS (INCLUDING IMPACT) FROM AN HS20 TRUCK, AN RLW TRUCK AND TRAILER, AND A 20 TON FORKLIFT:

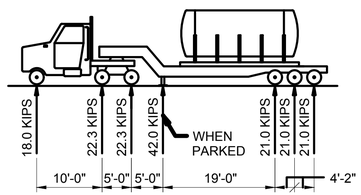

AXLE LOADS
RLW TRUCK AND TRAILER
NOT TO SCALE

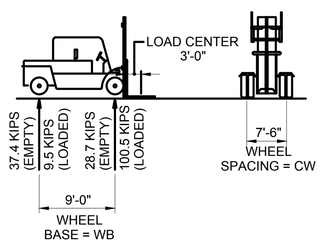

AXLE LOADS
20 TON FORKLIFT
NOT TO SCALE

AXLE LOAD DIAGRAMS FOR YARD STRUCTURES

NOT TO SCALE

23. THE STORMWATER QUALITY TREATMENT UNITS SHALL BE MAINTAINED BY VACUUM TRUCK. OIL & SEDIMENT SHALL BE REMOVED AT YEARLY INTERVALS OR WHEN THE OIL AND SEDIMENT REACH THE MAXIMUM LEVELS RECOMMENDED BY THE MANUFACTURER. THE CONTRACTOR SHALL BE REQUIRED TO MAINTAIN THE UNITS DURING CONSTRUCTION AND VACUUM OUT PRIOR TO BENEFICIAL OCCUPANCY DATE (BOD).

ABBREVIATIONS

@	-	AT
%	-	PERCENT
#	-	NUMBER
APPROX	-	APPROXIMATE
ASTM	-	AMERICAN SOCIETY FOR TESTING & MATERIALS
AWG	-	AMERICA WIRE GAUGE
BLDG	-	BUILDING
BM#	-	BENCHMARK NUMBER
BP	-	BRACE POST
BW	-	BARBED WIRE / BOTTOM OF WALL
CB	-	CATCH BASIN
CL	-	CENTER LINE
CLR	-	CLEAR
CONC	-	CONCRETE
CP#	-	CONTROL POINT NUMBER
Ø OR DIA	-	DIAMETER
DIP	-	DUCTILE IRON PIPE
DND	-	DO NOT DISTURB
DWG	-	DRAWING
EL OR ELEV	-	ELEVATION
EOC	-	EDGE OF CONCRETE
ESMT	-	EASEMENT
ETC	-	ETCETERA
EXIST OR EX	-	EXISTING
FF	-	FINISHED FLOOR
FH	-	FIRE HYDRANT
FT OR '	-	FOOT
FW	-	FRESH WATER
GALV	-	GALVANIZED
HB	-	HORIZONTAL BEND
HDPE	-	HIGH DENSITY POLYETHYLENE
HGL	-	HYDRAULIC GRADE LINE
HPW	-	HIGH PRESSURE WATER
IN OR "	-	INCH
INCL	-	INCLUDED
INV	-	INVERT
LBS	-	POUNDS
LBS/FT		POUNDS PER FOOT
LF		LINEAR FEET
LS	-	LAND SURVEYOR
MH	-	MANHOLE
MAX	-	MAXIMUM
MIN	-	MINIMUM
MUTCD	-	MANUAL ON UNIFORM TRAFFIC CONTROL DEVICES
NE	-	NORTHEAST
NNSY	-	NORFOLK NAVAL SHIPYARD
NO	-	NUMBER
NW	-	NORTHWEST
OC	-	ON CENTER
OD	-	OUTSIDE DIAMETER
PC	-	POINT OF CURVATURE
PCC	-	PORTLAND CEMENT CONCRETE
PCR	-	POINT OF CURB RETURN
PI	-	POINT OF INTERSECTION
PROP	-	PROPOSED
PT	-	POINT OF TANGENCY OR POINT
PVC	-	POLYVINYL CHLORIDE PIPE
PVMT	-	PAVEMENT
RD	-	ROOF DRAIN
REINF	-	REINFORCED
RCP	-	REINFORCED CONCRETE PIPE
SAN	-	SANITARY SEWER
SD	-	STORM DRAIN
SE	-	SOUTHEAST
SF	-	SQUARE FEET
SHT	-	SHEET
STA	-	STATION
STD	-	STANDARD
ST	-	SPIRAL TO TANGENT
STM	-	SOUTHWEST, SALTWATER
SW	-	STEAM
T/C	-	TOP OF COVER
T/G	-	TOP OF GRATE
TS	-	TANGENT TO SPIRAL
TW	-	TOP OF WALL
TYP	-	TYPICAL
UED	-	UNDERGROUND ELECTRIC DUCT
UGA	-	UNDERGROUND COMPRESSED AIR
UIP	-	USE IN PLACE
VB	-	VERTICAL BEND
W/	-	WITH
WW	-	WOVEN WIRE
WWF	-	WELDED WIRE FABRIC

LEGEND

EXISTING		NEW
970	MAJOR CONTOUR	1090
971	MINOR CONTOUR	
	SLOPE INDICATOR	TOP / TOE
	CENTERLINE FENCE	
	OVERHEAD POWER	
	PIPE BOLLARD/GUARDPOST	
	ROAD	
+ 972.18	SPOT ELEVATION	1093.50
	NORTH/EAST	N 696458.79 E 637604.35
	CURB AND GUTTER	
	ASPHALT/BITUMINOUS PAVEMENT	
	CONCRETE	
	AGGREGATE	
	UNDISTURBED EARTH	
	COMPACTED SUB-GRADE	
	GRADING LIMITS	
	SECTION CORNER FOUND	
	TEMPORARY BENCHMARK	
	SET 1/2" BAR W/ CLS 20 CAP	
BOR B-4	BORING LOCATION	
	STREET/TRAFFIC SIGN	
S	UNDERGROUND SEWER LINE	
G	UNDERGROUND GAS MAIN	
	GAS MAIN RELEASE VALVE	
	GAS MAIN SIGN	
T	UNDERGROUND TELEPHONE LINE	
TB	TELEPHONE PEDESTAL	
TV	UNDERGROUND CABLE TV LINE	
CB	CABLE TV PEDESTAL	
W	WATER MAIN	6"FW
M	MONITORING WELL	
	FIRE HYDRANT	
	WATER VALVE	
UGE	UNDERGROUND ELECTRIC LINE	
E	ELECTRIC MANHOLE	
E	ELECTRIC PEDESTAL	
	LIGHT POLE	
	UTILITY POLE	
J	JUNCTION BOX	
S	SANITARY SEWER MANHOLE	
D	STORM SEWER MANHOLE	
	STORM SEWER DRAIN	15"SD
	STORM SEWER INLET	
	ROOF DRAIN	12"RD
	DECIDUOUS TREE	
M	MONITOR WELL	
(M)	MEASURED DIMENSION	
	CONNECT TO EXISTING	

SYM	DESCRIPTION	DATE	APPR

NAVFAC

COLORADO REGISTERED PROFESSIONAL ENGINEER STEVEN P. HANSEN 38438

Burns & McDonnell SINCE 1898

A/E INFO

APPROVED

FOR COMMANDER NAVFAC

ACTIVITY
D.W. HARRIS
3/22/16
SATISFACTORY TO DATE

DES SPH DRW CRJ CHK JWS
PM John A. Moore, R.A.
BRANCH MANAGER
CHIEF ENG/ARCH
DATE 03/16/2016

DEPARTMENT OF THE NAVY
NAVAL FACILITIES ENGINEERING COMMAND
HAMPTON ROADS IPT
NORFOLK NAVAL SHIPYARD

NAVAL FACILITIES ENGINEERING COMMAND ~ MID ATLANTIC
NORFOLK, VIRGINIA
PORTSMOUTH, VIRGINIA

DEMOLITION DRYDOCKS 6 & 7

GENERAL NOTES AND LEGEND

SCALE: AS NOTED
EPROJECT NO.: 568932
CONSTR. CONTR. NO.
NAVFAC DRAWING NO. 12715711
SHEET 64 OF 90

C-001

DRAWFORM REVISION: 10 MARCH 2009

FILE NAME: J:\NNSY\CIF\54018_CIF Final Design Contract\04_CADD\03_CIVIL\Construction Drawings\Final Drawings\Drydocks 6 & 7\P3\83DRYD-568932-C-001.dwg LAYOUT NAME: Layout1 PLOTTED: Wednesday, March 16, 2016 - 12:58pm USER: janaya

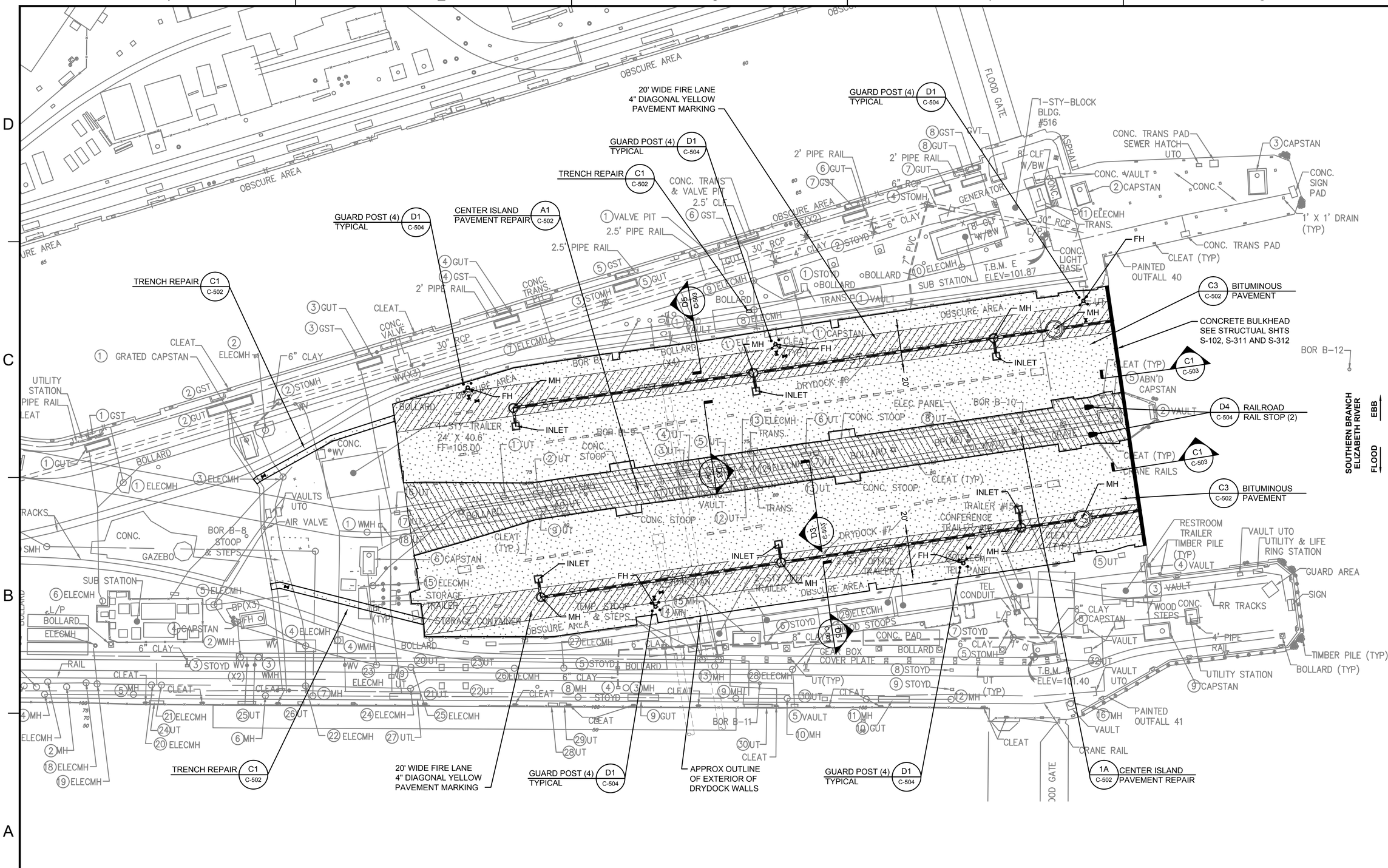

SHEET NOTES:

1. MEAN LOW WATER (MLW) = 93.43 MEAN HIGH WATER (MHW) = 96.18

SITE PLAN

SCALE 1" = 30'

PLAN NORTH

GRAPHIC SCALE

1" = 30' 0 15' 30' 60'

SCALE IN FEET

SCALE:	AS NOTED
EPROJECT NO.:	568932
CONSTR. CONTR. NO.	
NAVFAC DRAWING NO.	12715712
SHEET	65 OF 90

C-100

DRAWFORM REVISION: 10 MARCH 2009

DEPARTMENT OF THE NAVY
NAVAL FACILITIES ENGINEERING COMMAND
HAMPTON ROADS IPT

NAVAL FACILITIES ENGINEERING COMMAND ~ MID ATLANTIC
NORFOLK, VIRGINIA

NORFOLK NAVAL SHIPYARD
PORTSMOUTH, VIRGINIA

DEMOLITION DRYDOCKS 6 & 7

SITE PLAN

APPROVED

FOR COMMANDER NAVFAC

ACTIVITY

SATISFACTORY TO DATE

DES SPH DRW CRJ CHK JWS

PM John A. Moore, R.A.

BRANCH MANAGER

CHIEF ENG/ARCH

DATE 03/16/2016

SYM DESCRIPTION DATE APPR

A/E INFO

FILE NAME: J:\NNSY\CIF\54018_CIF Final Design Contract\04_CADD\03_CIVIL\Construction Drawings\Final Drawings\Drydocks 6 & 7\P383DRYD-568932-C-100.dwg LAYOUT NAME: Layout1 PLOTTED: Thursday, March 17, 2016 - 11:35am USER: janaya

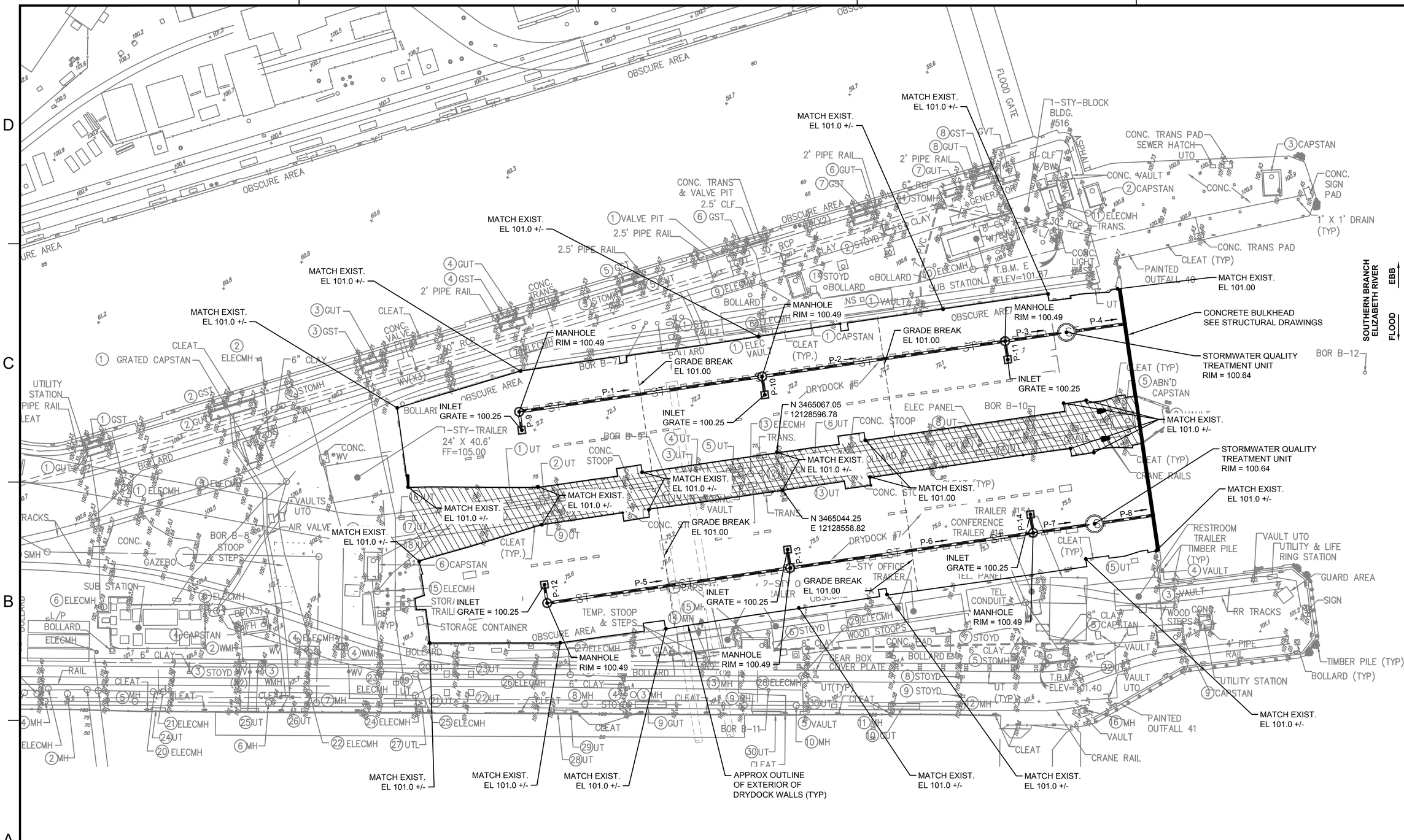

SHEET NOTES:

1. MEAN LOW WATER (MLW) = 93.43 MEAN HIGH WATER (MHW) = 96.18
2. TOP OF ASPHALT PAVEMENT AT EXISTING DRYDOCK WALLS SHALL MATCH EXISTING TOP OF DRYDOCK COPING. APPROXIMATE EL 101.00±.
3. SLOPE ASPHALT TO DRAIN TO STORM DRAIN INLETS, AT A CONSTANT GRADE.

SITE GRADING PLAN

SCALE 1" = 30'

PLAN NORTH

GRAPHIC SCALE

1" = 30' 0 15' 30' 60' SCALE IN FEET

SYM	DESCRIPTION	DATE	APPR

COLORADO REGISTERED STEVEN P. HANSEN 38438 PROFESSIONAL ENGINEER

Burns & McDonnell SINCE 1898

A/E INFO

APPROVED

FOR COMMANDER NAVFAC

ACTIVITY

SATISFACTORY TO DATE

DES SPH DRW CRJ CHK JWS

PM John A. Moore, R.A.

BRANCH MANAGER

CHIEF ENG/ARCH

DATE 03/16/2016

DEPARTMENT OF THE NAVY
NAVAL FACILITIES ENGINEERING COMMAND ~ MID ATLANTIC
HAMPTON ROADS IPT, NORFOLK NAVAL SHIPYARD, PORTSMOUTH, VIRGINIA, NORFOLK, VIRGINIA

DEMOLITION DRYDOCKS 6 & 7

SITE GRADING PLAN

SCALE: AS NOTED

EPROJECT NO.: 568932

CONSTR. CONTR. NO.

NAVFAC DRAWING NO. 12715713

SHEET 66 OF 90

CG-101

DRAWFORM REVISION: 10 MARCH 2009

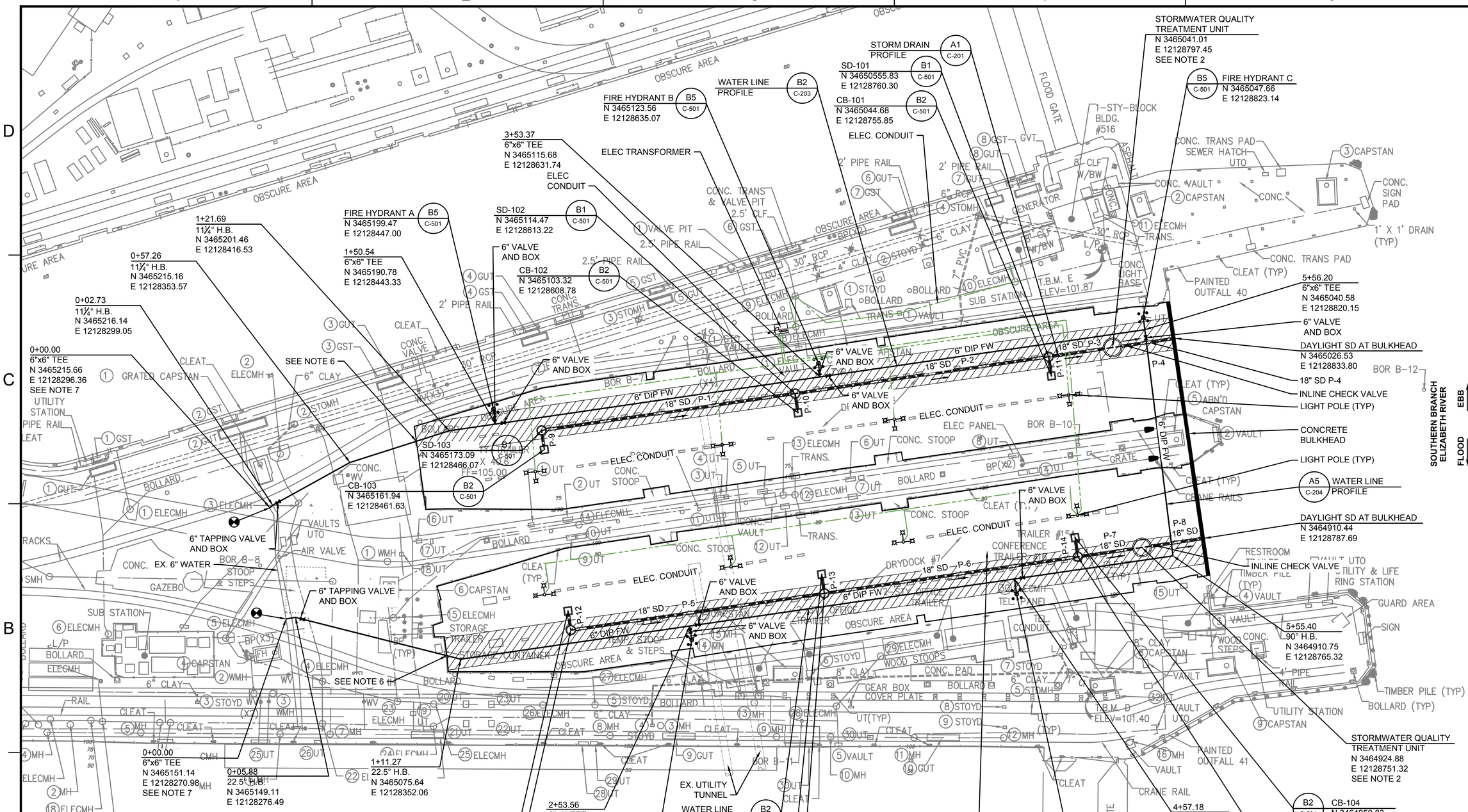

SHEET NOTES:

1. MEAN LOW WATER (MLW) = 93.43 MEAN HIGH WATER (MHW) = 96.18
2. STORMWATER QUALITY TREATMENT UNIT SHALL MEET THE REQUIREMENTS OF SPEC 33 41 00. THE UNIT SHALL OPERATE IN SUBMERGED CONDITION.
3. SEE UTILITY PROFILE DRAWINGS FOR ELEVATION INFORMATION.
4. ELECTRIC CONDUIT IS SHOWN FOR COORDINATION AND LOCATION ONLY. FOR CONSTRUCTION SEE ELECTRIC DRAWINGS.
5. ALL TEES, BENDS, VALVES, FITTINGS AND PLUGS SHALL BE RESTRAINED.
6. PROVIDE CORE DRILL APPROXIMATELY 12" IN DIAMETER AND 3 FT. LONG THROUGH WALL OF DRYDOCK.
7. CONTRACTOR SHALL CUT AND SLEEVE IN NEW TEE. SHOULD AN OUTAGE NOT BE GRANTED THAN A TAPPING SLEEVE SHALL BE USED.

SITE UTILITY PLAN

SCALE 1" = 30'

GRAPHIC SCALE

1" = 30' 0 15' 30' 60'
SCALE IN FEET

SYM	DESCRIPTION	DATE	APPR

NAVFAC

COLORADO REGISTERED STEVEN P. HANSEN 38438 PROFESSIONAL ENGINEER

Burns & McDonnell SINCE 1898

A/E INFO

APPROVED

FOR COMMANDER NAVFAC

ACTIVITY

SATISFACTORY TO DATE

DES SPH DRW CRJ CHK JWS

PM John A. Moore, R.A.

BRANCH MANAGER

CHIEF ENG/ARCH

DATE 03/16/2016

DEPARTMENT OF THE NAVY
NAVAL FACILITIES ENGINEERING COMMAND
HAMPTON ROADS IPT
NAVAL FACILITIES ENGINEERING COMMAND ~ MID ATLANTIC
NORFOLK, VIRGINIA
NORFOLK NAVAL SHIPYARD
PORTSMOUTH, VIRGINIA

DEMOLITION DRYDOCKS 6 & 7

SITE UTILITY PLAN

SCALE: AS NOTED

EPROJECT NO.: 568932

CONSTR. CONTR. NO.

NAVFAC DRAWING NO. 12715714

SHEET 67 OF 90

CU-101

DRAWFORM REVISION: 10 MARCH 2009

FILE NAME: J:\NNSY\CIF\54018_CIF Final Design Contract\04_CADD\03_CIVIL\Construction Drawings\Final Drawings\Drydocks 6 & 7\P3830RYD-568932-CU-101.dwg LAYOUT NAME: Layout1 PLOTTED: Wednesday, March 16, 2016 - 11:53am USER: janaya

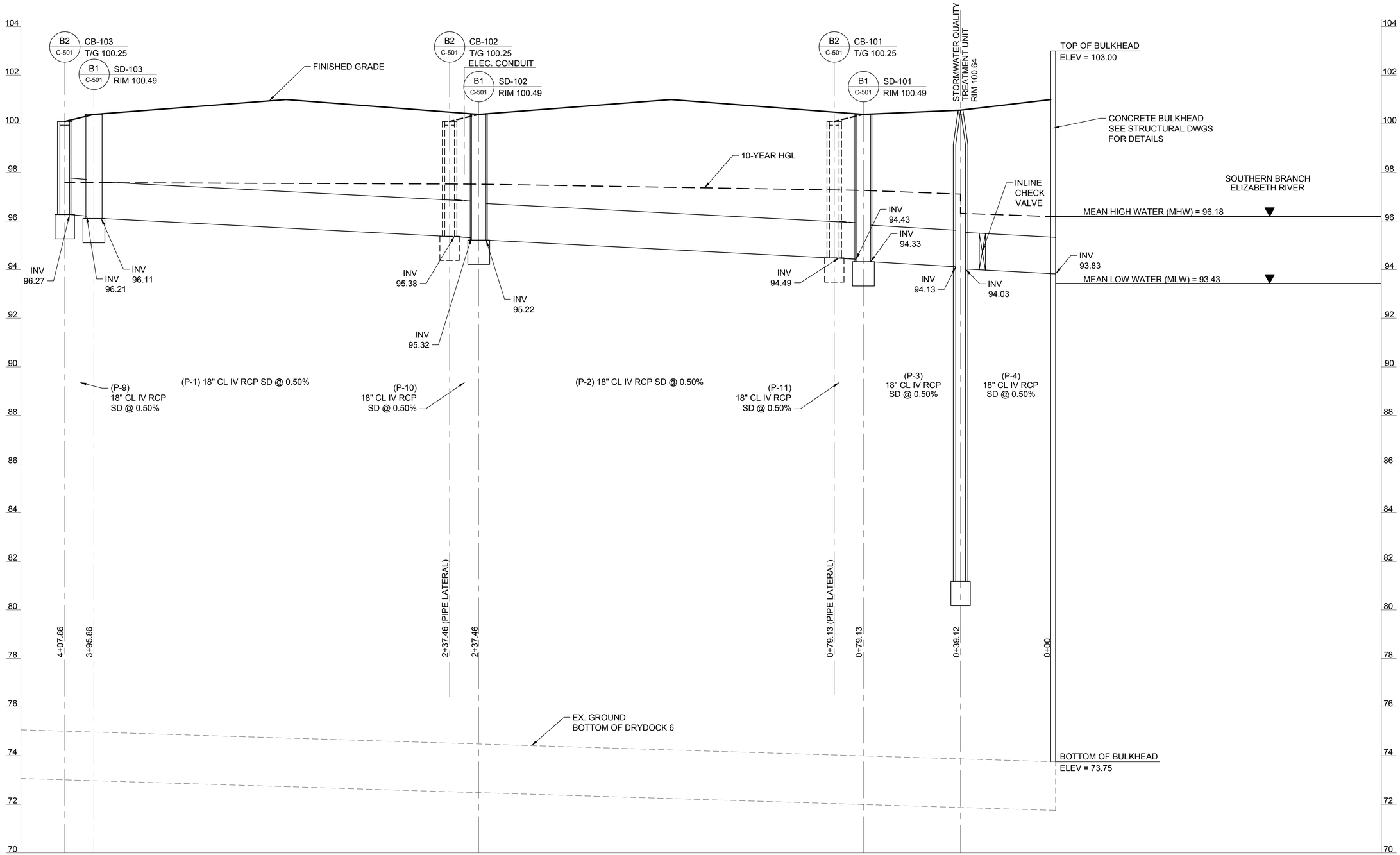

STORM DRAIN PROFILE - DRYDOCK 6

1"=20' HORIZ. 1"=2' VERT.

CU-101 A1

SHEET NOTES:

1. REFER TO SHT CU-101 FOR CORRESPONDING UTILITY PLANS.
2. ALL RCP STORM DRAIN PIPE SHALL HAVE O-RING JOINTS.

GRAPHIC SCALE

1" = 20' HORIZ. 0 10' 20' 40' SCALE IN FEET

1" = 2' VERT. 0 2' 4' SCALE IN FEET

SYM	DESCRIPTION	DATE	APPR

NAVFAC

COLORADO REGISTERED PROFESSIONAL ENGINEER STEVEN P. HANSEN 38438

Burns & McDonnell SINCE 1898

A/E INFO

APPROVED

FOR COMMANDER NAVFAC

ACTIVITY

SATISFACTORY TO DATE

DES SPH DRW CRJ CHK JWS

PM John A. Moore, R.A.

BRANCH MANAGER

CHIEF ENG/ARCH

DATE 03/16/2016

DEPARTMENT OF THE NAVY
NAVAL FACILITIES ENGINEERING COMMAND
HAMPTON ROADS IPT
NORFOLK NAVAL SHIPYARD

NAVAL FACILITIES ENGINEERING COMMAND ~ MID ATLANTIC
NORFOLK, VIRGINIA

PORTSMOUTH, VIRGINIA

DEMOLITION DRYDOCKS 6 & 7

UTILITY PROFILES - SHEET 1

SCALE: AS NOTED

EPROJECT NO.: 568932

CONSTR. CONTR. NO.

NAVFAC DRAWING NO. 12715716

SHEET 69 OF 90

C-201

DRAWFORM REVISION: 10 MARCH 2009

FILE NAME: J:\NNSY\CIF\54918_CIF Final Design Contract\04_CADD\03_CIVIL\Construction Drawings\Final Drawings\Drydocks 6 & 7\P383\DRYD-568932-C-201.dwg LAYOUT NAME: Layout1 PLOTTED: Wednesday, March 16, 2016 - 12:07pm USER: janaya

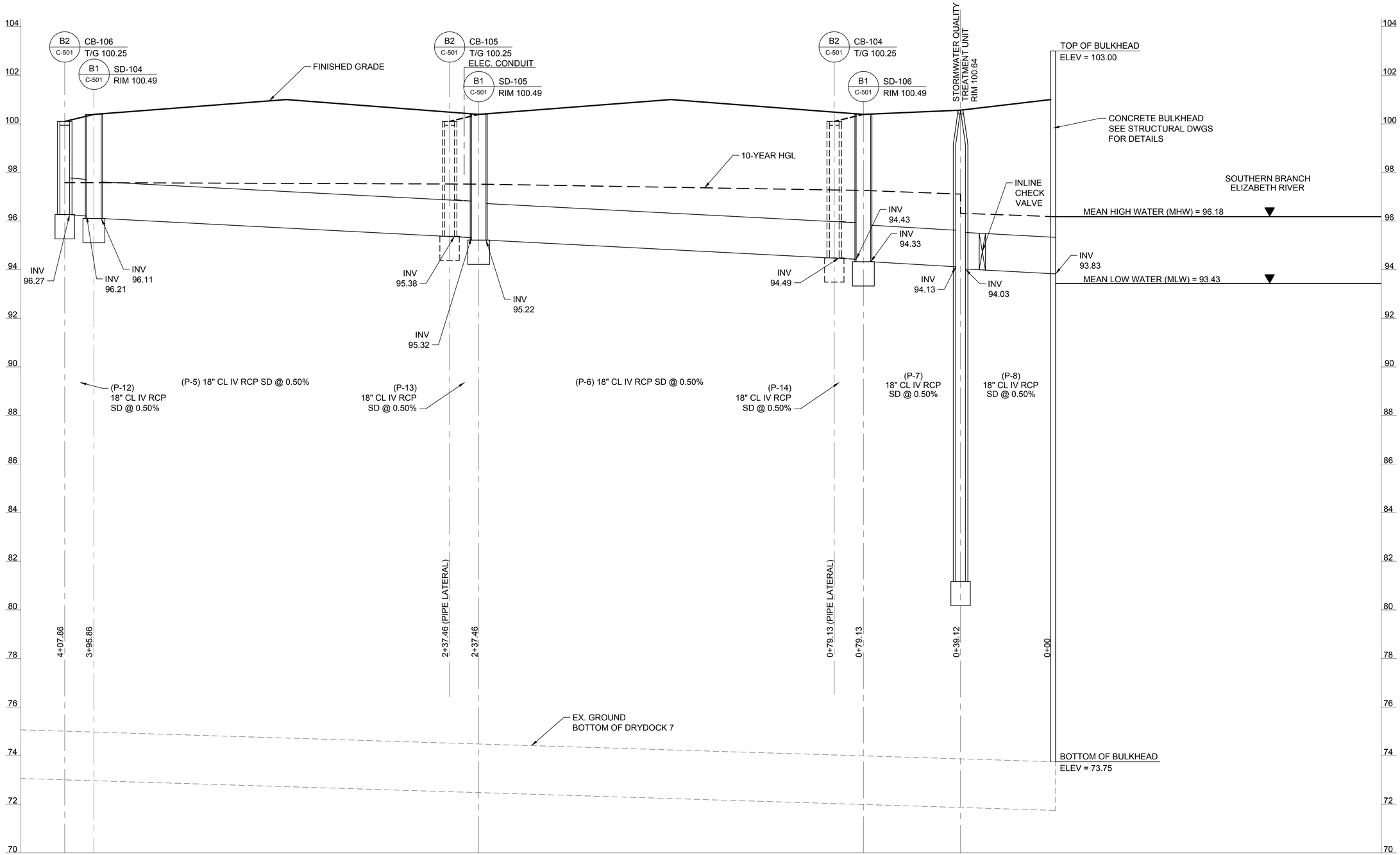

STORM DRAIN PROFILE - DRYDOCK 7

1"=20' HORIZ. 1"=2' VERT.

CU-101 A1

SHEET NOTES:

1. REFER TO SHT CU-101 FOR CORRESPONDING UTILITY PLANS.
2. ALL RCP STORM DRAIN PIPE SHALL HAVE O-RING JOINTS.

GRAPHIC SCALE

1" = 20' HORIZ. 0 10' 20' 40' SCALE IN FEET

1" = 2' VERT. 0 2' 4' SCALE IN FEET

SYM	DESCRIPTION	DATE	APPR

NAVFAC

COLORADO REGISTERED PROFESSIONAL ENGINEER STEVEN P. HANSEN 38438

Burns & McDonnell SINCE 1898

A/E INFO

APPROVED

FOR COMMANDER NAVFAC

ACTIVITY

SATISFACTORY TO DATE

DES SPH DRW CRJ CHK JWS

PM John A. Moore, R.A.

BRANCH MANAGER

CHIEF ENG/ARCH

DATE 03/16/2016

DEPARTMENT OF THE NAVY
NAVAL FACILITIES ENGINEERING COMMAND
HAMPTON ROADS IPT
NORFOLK NAVAL SHIPYARD

NAVAL FACILITIES ENGINEERING COMMAND ~ MID ATLANTIC
NORFOLK, VIRGINIA
PORTSMOUTH, VIRGINIA

DEMOLITION DRYDOCKS 6 & 7

UTILITY PROFILES - SHEET 2

SCALE: AS NOTED

EPROJECT NO.: 568932

CONSTR. CONTR. NO.

NAVFAC DRAWING NO. 12715717

SHEET 70 OF 90

C-202

DRAWFORM REVISION: 10 MARCH 2009

FILE NAME: J:\NNSY\CIF\54918_CIF Final Design Contract\04_CADD\03_CIVIL\Construction Drawings\Final Drawings\Drydocks 6 & 7\P383\DRYD-568932-C-202.dwg LAYOUT NAME: Layout1 PLOTTED: Wednesday, March 16, 2016 - 12:06pm USER: janaya

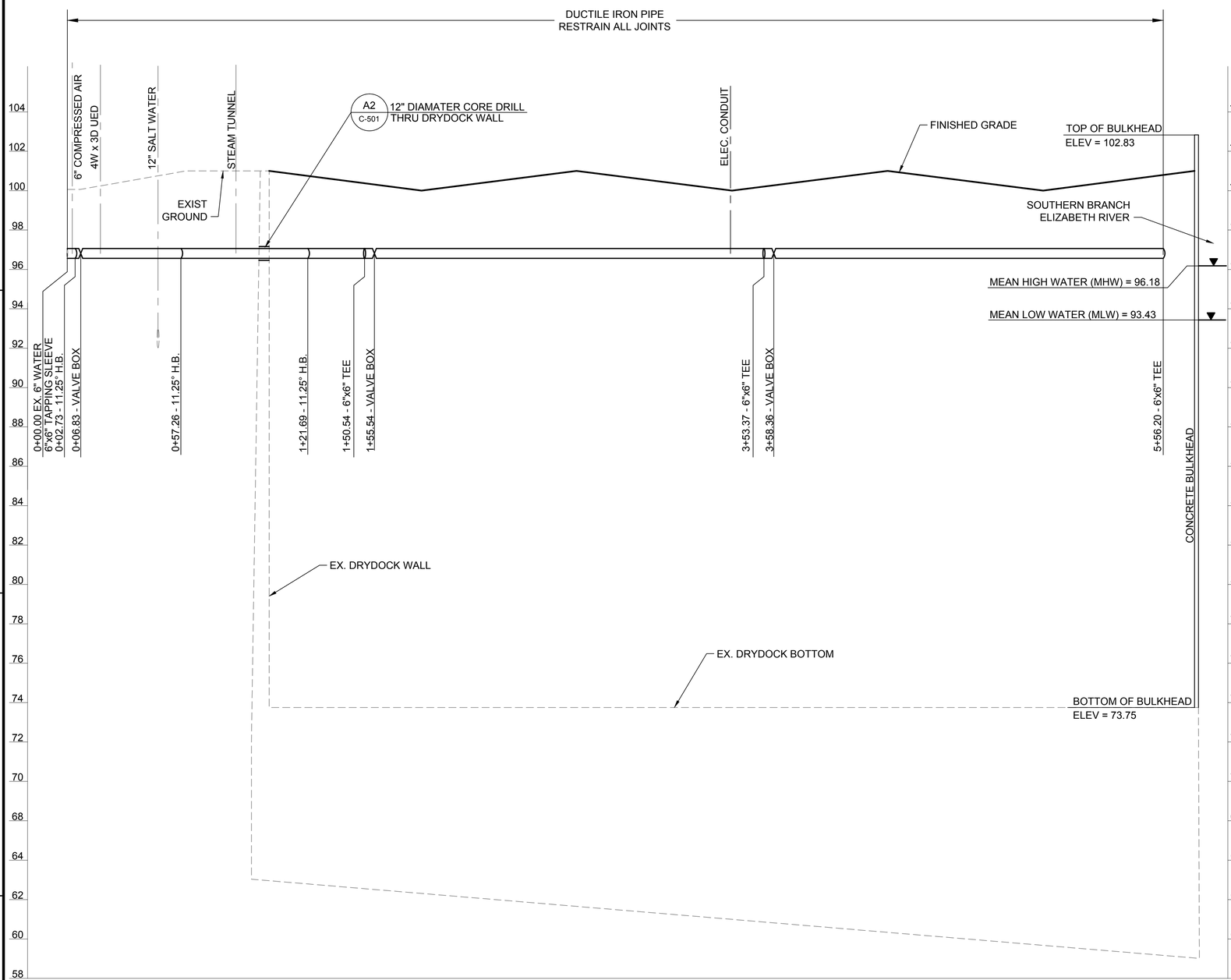

6" WATER LINE DRYDOCK 6 PROFILE

1"=30' HORIZ. 1"=3' VERT.

CU-101 B2

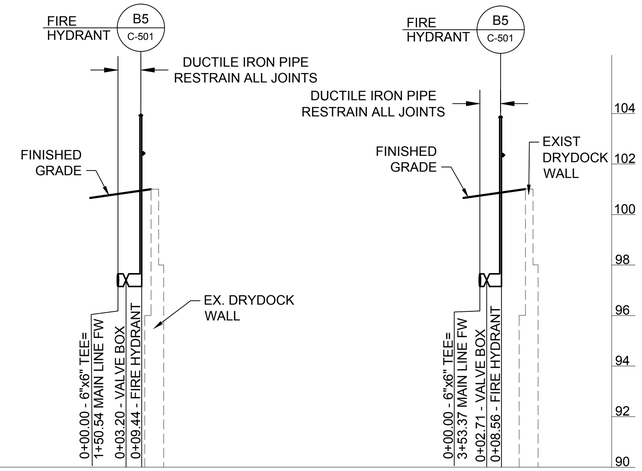

6" FW TO HYDRANT A

1"=30' HORIZ. 1"=3' VERT. CU-101 C4

6" FW TO HYDRANT B

1"=30' HORIZ. 1"=3' VERT.CU-101 C5

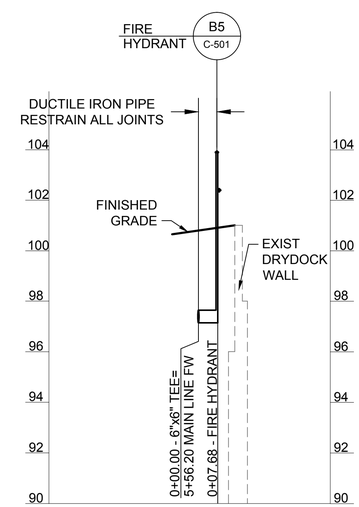

6" FW TO HYDRANT C

1"=30' HORIZ. 1"=3' VERT. CU-101 B5

SHEET NOTES:

1. CONTRACTOR SHALL ADJUST VERTICAL PROFILE AS NEEDED WITH VERTICAL BENDS FOR CROSSING EXISTING UTILITIES.
2. MINIMUM COVER OVER WATERLINES IS 3 FEET.
3. MINIMUM SEPARATION BETWEEN WATERLINES AND OTHER UTILITIES IS 1.5 FEET.
4. REFER TO SHT CU-101 FOR CORRESPONDING UTILITY PLAN.

GRAPHIC SCALE

1" = 30' HORIZ. 0 30' 60' SCALE IN FEET

1" = 3' VERT. 0 3' 6' SCALE IN FEET

SYM	DESCRIPTION	DATE	APPR

NAVFAC

COLORADO REGISTERED PROFESSIONAL ENGINEER STEVEN P. HANSEN 38438

Burns & McDonnell SINCE 1898

A/E INFO

APPROVED

FOR COMMANDER NAVFAC

ACTIVITY

SATISFACTORY TO DATE

DES SPH DRW CRJ CHK JWS

PM John A. Moore, R.A.

BRANCH MANAGER

CHIEF ENG/ARCH

DATE 03/16/2016

DEPARTMENT OF THE NAVY
NAVAL FACILITIES ENGINEERING COMMAND
HAMPTON ROADS IPT
NORFOLK NAVAL SHIPYARD

NAVAL FACILITIES ENGINEERING COMMAND ~ MID ATLANTIC
NORFOLK, VIRGINIA
PORTSMOUTH, VIRGINIA

DEMOLITION DRYDOCKS 6 & 7

UTILITY PROFILES - SHEET 3

SCALE: AS NOTED

EPROJECT NO.: 568932

CONSTR. CONTR. NO.

NAVFAC DRAWING NO. 12715718

SHEET 71 OF 90

C-203

DRAWFORM REVISION: 10 MARCH 2009

FILE NAME: J:\NNSY\CIF\54018_CIF Final Design Contract\04_CADD\03_CIVIL\Construction Drawings\Final Drawings\Drydocks 6 & 7\P383DRYD-568932-C-203.dwg LAYOUT NAME: Layout1 PLOTTED: Wednesday, March 16, 2016 - 12:04pm USER: janaya

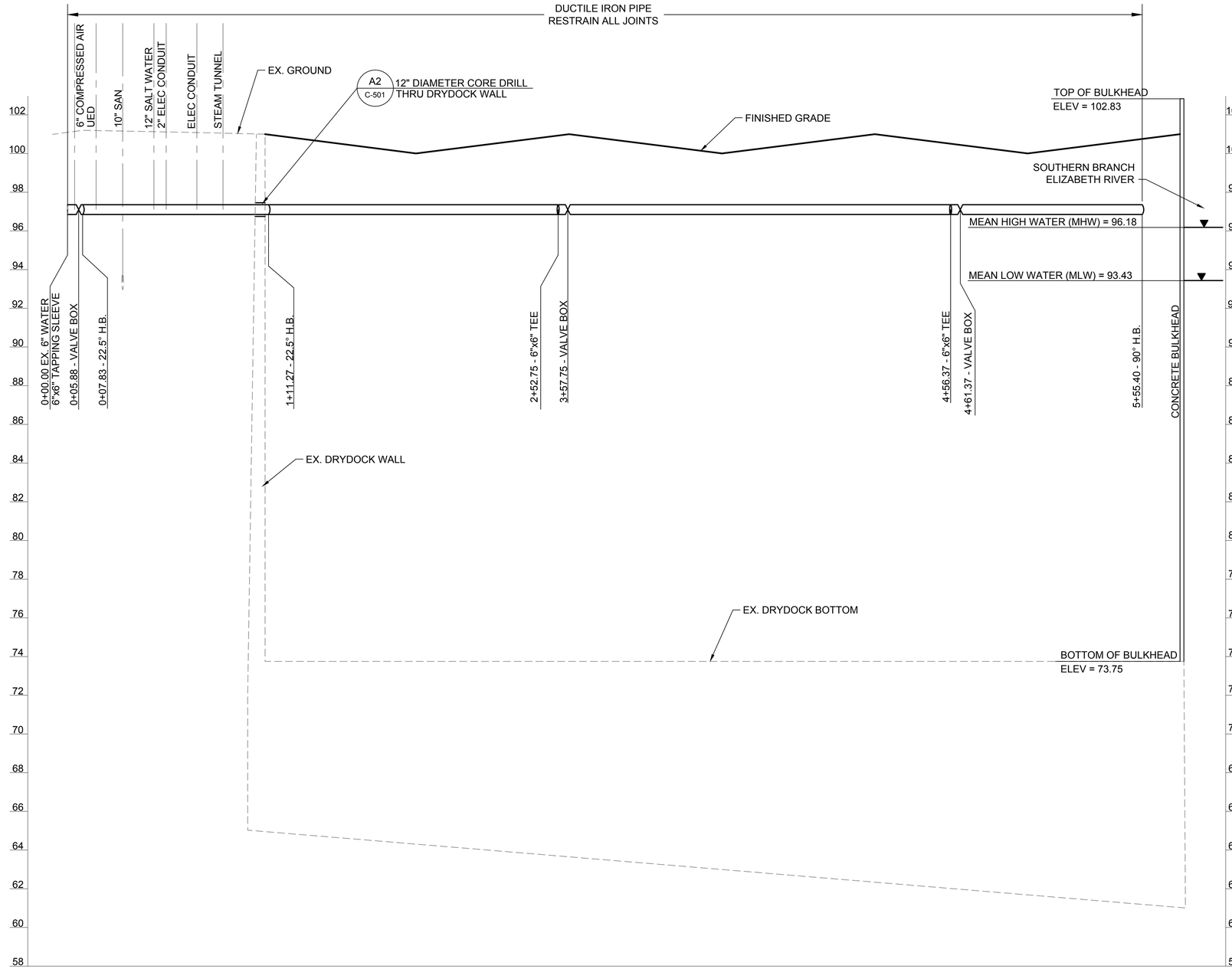

6" WATER LINE DRYDOCK 7 PROFILE

1"=30' HORIZ. 1"=3' VERT. CU-101 (B2)

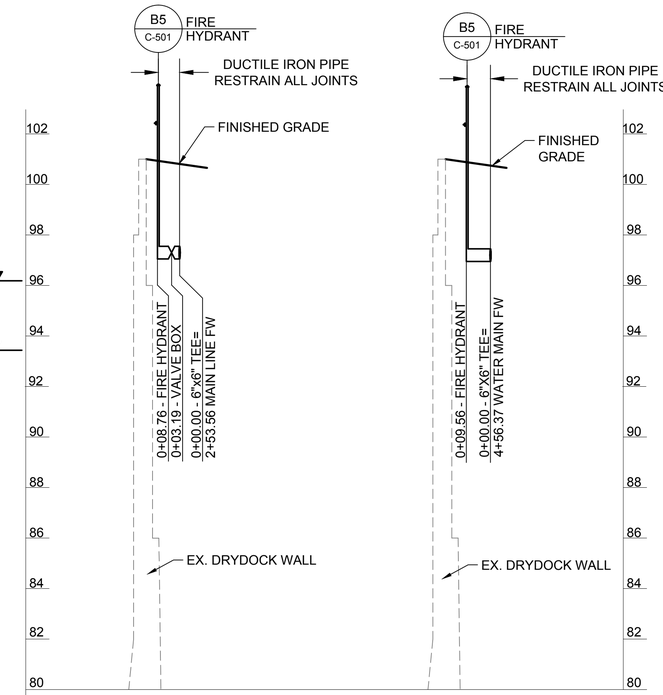

6" FW TO HYDRANT D

1"=30' HORIZ. 1"=3' VERT. CU-101 (B4)

6" FW TO HYDRANT E

1"=30' HORIZ 1"=3' VERT. CU-101 (B5)

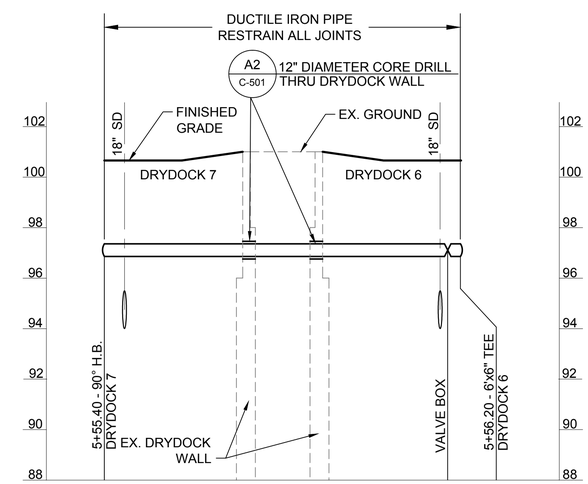

6" WATER LINE DRYDOCK 6 TO 7 PROFILE

1"=30' HORIZ 1"=3' VERT. CU-101 (A5)

SHEET NOTES:

1. CONTRACTOR SHALL ADJUST VERTICAL PROFILE AS NEEDED WITH VERTICAL BENDS FOR CROSSING EXISTING UTILITIES.
2. MINIMUM COVER OVER WATERLINES IS 3 FEET.
3. MINIMUM SEPARATION BETWEEN WATERLINES AND OTHER UTILITIES IS 1.5 FEET.
4. REFER TO SHT CU-101 FOR CORRESPONDING UTILITY PLAN.

GRAPHIC SCALE

1" = 30' HORIZ. 0 30' 60' SCALE IN FEET

1" = 3' VERT. 0 3' 6' SCALE IN FEET

SYM	DESCRIPTION	DATE	APPR

NAVFAC

COLORADO REGISTERED PROFESSIONAL ENGINEER STEVEN P. HANSEN 38438

Burns & McDonnell SINCE 1898

A/E INFO

APPROVED

FOR COMMANDER NAVFAC

ACTIVITY

SATISFACTORY TO DATE

DES SPH DRW CRJ CHK JWS

PM John A. Moore, R.A.

BRANCH MANAGER

CHIEF ENG/ARCH

DATE 03/16/2016

DEPARTMENT OF THE NAVY
NAVAL FACILITIES ENGINEERING COMMAND
HAMPTON ROADS IPT
NORFOLK NAVAL SHIPYARD

NAVAL FACILITIES ENGINEERING COMMAND ~ MID ATLANTIC
NORFOLK, VIRGINIA
PORTSMOUTH, VIRGINIA

DEMOLITION DRYDOCKS 6 & 7

UTILITY PROFILES - SHEET 4

SCALE: AS NOTED

EPROJECT NO.: 568932

CONSTR. CONTR. NO.

NAVFAC DRAWING NO. 12715719

SHEET 72 OF 90

C-204

DRAWFORM REVISION: 10 MARCH 2009

FILE NAME: J:\NNSY\CIF\54018_CIF Final Design Contract\04_CADD\03_CIVIL\Construction Drawings\Final Drawings\Drydocks 6 & 7\P383DRYD-568932-C-204.dwg LAYOUT NAME: Layout1 PLOTTED: Wednesday, March 16, 2016 - 12:02pm USER: janaya

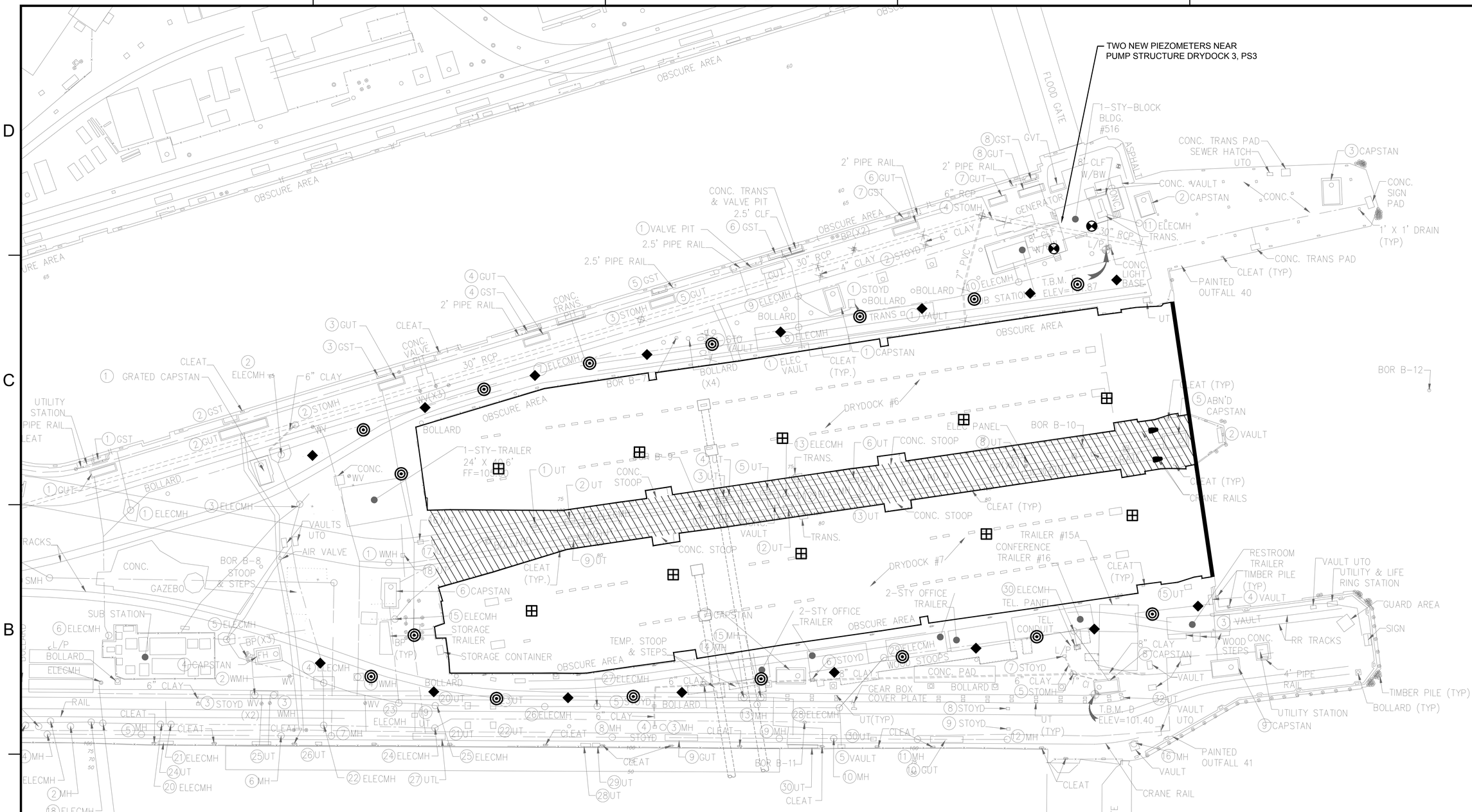

SHEET NOTES:

1. NINE EXISTING OBSERVATION WELLS UTILIZED IN THE SUBSURFACE EXPLORATION INDICATED ON SHEET B-108 SHALL BE RE-USED FOR GROUNDWATER MONITORING.
2. A TOTAL OF 10 NEW STRUCTURAL CRACK MONITORING DEVISES SHALL BE INSTALLED AROUND EXISTING STRUCTURAL ELEMENTS LOCATED IN AND AROUND DRYDOCKS 6, 7, 3, & 4 AS DIRECTED BY CONTRACTING OFFICER.
3. 10 PLATE SETTLMENT MONITORING GAUGES TO BE INSTALLED AT TOP OF DRYDOCK FLOOR ALONG CENTERLINE OF DRYDOCKS 6 & 7. AND 10 MORE TO BE INSTALLED AT NNSD ELEVATION OF 87.0 FEET.

LEGEND:

- PIEZOMETERS
- MAGNETIC SETTLEMENT GAUGES
- INCLINOMETERS
- PLATE SETTLEMENT GAUGE

SETTLEMENT MONITORING PLAN

SCALE 1" = 30'

PLAN NORTH

GRAPHIC SCALE

1" = 30' 0 15' 30' 60'

SCALE IN FEET

SYM	DESCRIPTION	DATE	APPR

NAVFAC

COLORADO REGISTERED PROFESSIONAL ENGINEER STEVEN P. HANSEN 38438

Burns & McDonnell SINCE 1898

A/E INFO

APPROVED

FOR COMMANDER NAVFAC

ACTIVITY

SATISFACTORY TO DATE

DES SPH DRW JRA CHK JWS

PM John A. Moore, R.A.

BRANCH MANAGER

CHIEF ENG/ARCH

DATE 03/16/2016

DEPARTMENT OF THE NAVY
NAVAL FACILITIES ENGINEERING COMMAND
HAMPTON ROADS IPT
NORFOLK NAVAL SHIPYARD

NAVAL FACILITIES ENGINEERING COMMAND ~ MID ATLANTIC
NORFOLK, VIRGINIA
PORTSMOUTH, VIRGINIA

DEMOLITION DRYDOCKS 6 & 7

SETTLEMENT MONITORING PLAN

SCALE: AS NOTED

EPROJECT NO.: 568932

CONSTR. CONTR. NO.

NAVFAC DRAWING NO. 12715720

SHEET 73 OF 90

C-310

DRAWFORM REVISION: 10 MARCH 2009

FILE NAME: J:\NNSY\CIF\54018_CIF Final Design Contract\04_CADD\03_CIVIL\Construction Drawings\Final Drawings\Drydocks 6 & 7\P3\83DRYD-568932-C-310.dwg LAYOUT NAME: Layout1 PLOTTED: Wednesday, March 16, 2016 - 12:00pm USER: janaya

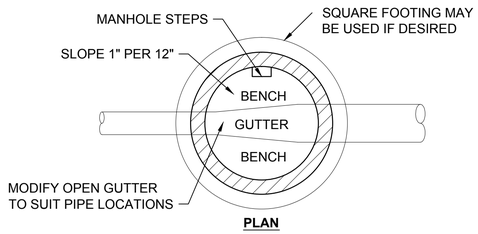

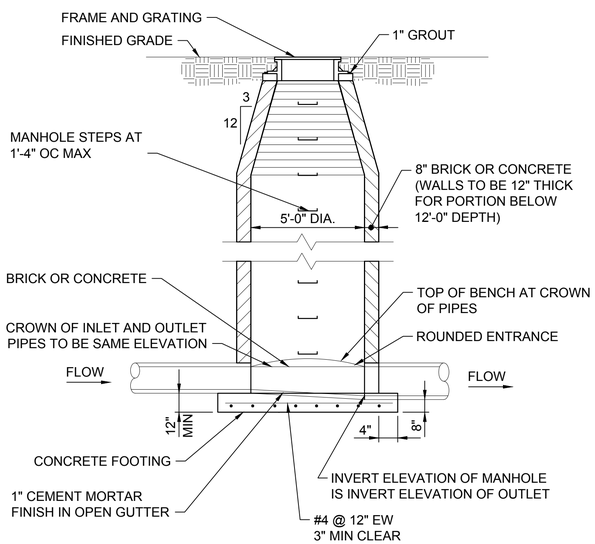

MANHOLE DETAIL (B1)

NOT TO SCALE — CU-101, C-201, C-202

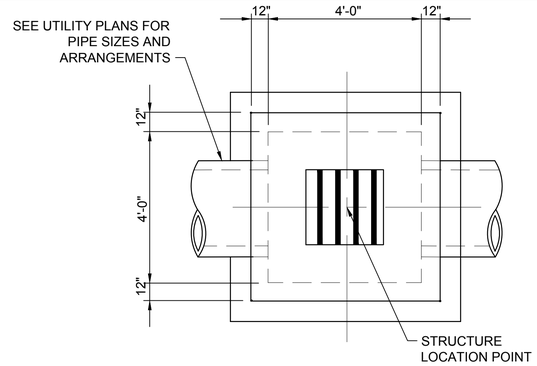

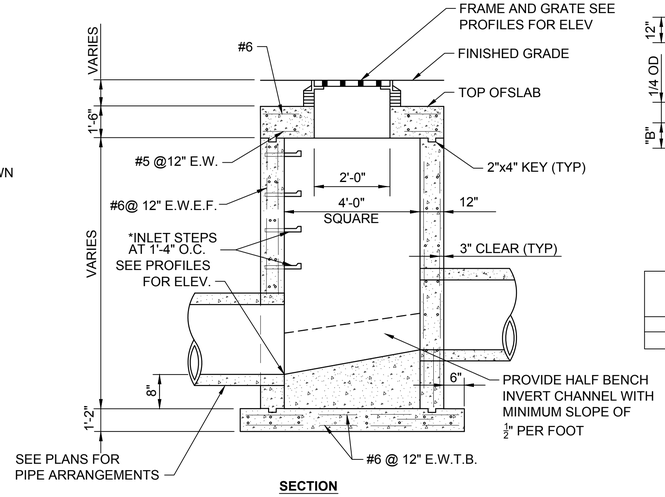

*INLET STEPS SHALL BE LOCATED SO THAT THEY ARE NOT ABOVE PIPES.

INLET DETAIL (B2)

NOT TO SCALE — CU-101, C-201, C-202

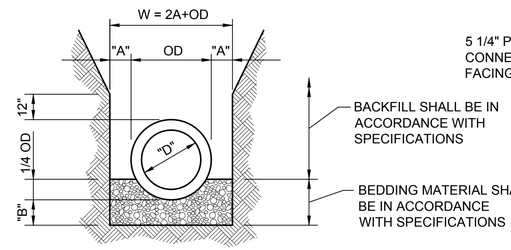

PIPE DIA. "D"	MAXIMUM "A"	MINIMUM "B"
6" TO 16"	8"	9"
18"	10"	9"

TYPICAL PIPE TRENCH DETAIL (B4)

NOT TO SCALE — C-104, C-105, C-201, C-202, C-203, C-204

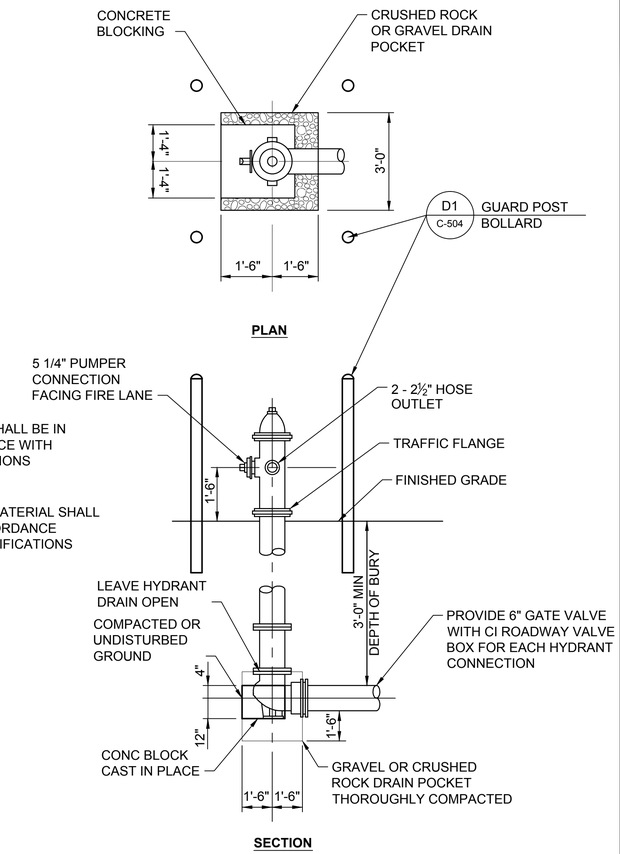

FIRE HYDRANT DETAIL (B5)

NOT TO SCALE — CU-101, C-203, C-204

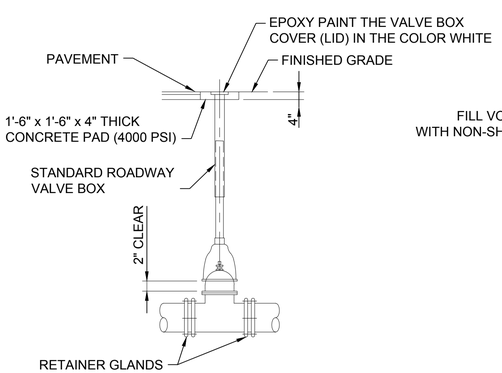

VALVE BOX INSTALLATION DETAIL (A1)

NOT TO SCALE — C-105, C-203, C-204

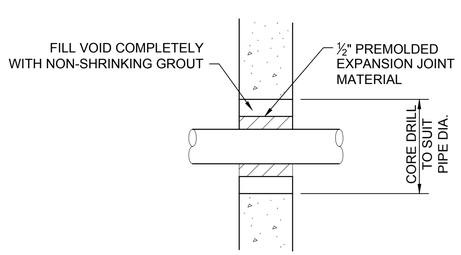

CORE DRILL DETAIL (A2)

NOT TO SCALE — C-203, C-204

SYM	DESCRIPTION	DATE	APPR

COLORADO REGISTERED PROFESSIONAL ENGINEER STEVEN P. HANSEN 38438

Burns & McDonnell SINCE 1898

A/E INFO

APPROVED

FOR COMMANDER NAVFAC

ACTIVITY

SATISFACTORY TO DATE

DES SPH DRW CRJ CHK DPS

PM John A. Moore, R.A.

BRANCH MANAGER

CHIEF ENG/ARCH

DATE 03/16/2016

DEPARTMENT OF THE NAVY
NAVAL FACILITIES ENGINEERING COMMAND
HAMPTON ROADS IPT

NAVAL FACILITIES ENGINEERING COMMAND ~ MID ATLANTIC
NORFOLK, VIRGINIA

NORFOLK NAVAL SHIPYARD
PORTSMOUTH, VIRGINIA

DRYDOCKS 6 & 7

UTILITY DETAILS

SCALE: AS NOTED

EPROJECT NO.: 568932

CONSTR. CONTR. NO.

NAVFAC DRAWING NO. 12715721

SHEET 74 OF 90

C-501

DRAWFORM REVISION: 10 MARCH 2009

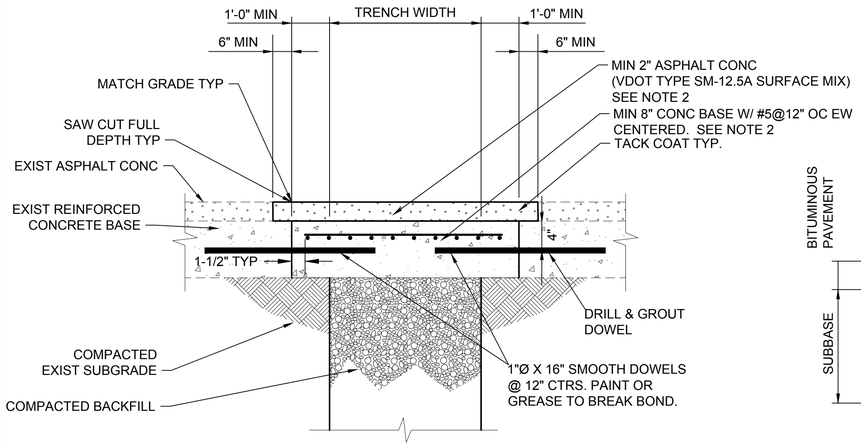

NOTE:

1. TRENCH REPAIR DETAILS ARE NOT APPLICABLE WHERE UTILITIES ARE UNDER NEW CONCRETE AND BITUMINOUS PAVED AREAS UNLESS CUT.
2. MATCH EXISTING ADJACENT PAVEMENT THICKNESSES. WHERE EXISTING PAVEMENT IS LESS THAN MINIMUM INDICATED, PROVIDE MINIMUM PAVEMENT SECTION.

TRENCH REPAIR DETAIL

NOT TO SCALE — C-100 — C1

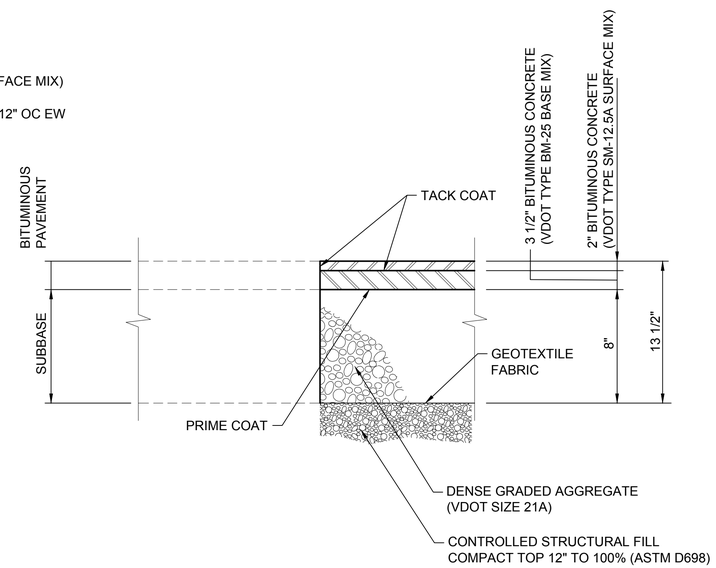

BITUMINOUS PAVEMENT DETAIL

NOT TO SCALE — C-100 — C3

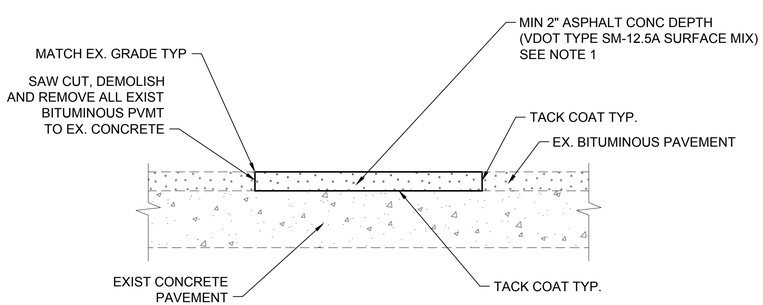

NOTE:

1. MATCH EXISTING BITUMINOUS PAVEMENT THICKNESS. WHERE EXISTING PAVEMENT IS LESS THAN MINIMUM INDICATED, PROVIDE MINIMUM PAVEMENT SECTION.

CENTER ISLAND PAVEMENT REPAIR DETAIL

NOT TO SCALE — C-100 — A1

SYM	DESCRIPTION	DATE	APPR

NAVFAC

COLORADO REGISTERED PROFESSIONAL ENGINEER STEVEN P. HANSEN 38438

Burns & McDonnell SINCE 1898

A/E INFO

APPROVED

FOR COMMANDER NAVFAC

ACTIVITY

SATISFACTORY TO DATE

DES SPH | DRW CRJ | CHK JWS

PM John A. Moore, R.A.

BRANCH MANAGER

CHIEF ENG/ARCH

DATE 03/16/2016

DEPARTMENT OF THE NAVY
NAVAL FACILITIES ENGINEERING COMMAND
HAMPTON ROADS IPT
NORFOLK NAVAL SHIPYARD

NAVAL FACILITIES ENGINEERING COMMAND ~ MID ATLANTIC
NORFOLK, VIRGINIA
PORTSMOUTH, VIRGINIA

DEMOLITION DRYDOCKS 6 & 7

PAVING DETAILS

SCALE: AS NOTED

EPROJECT NO.: 568932

CONSTR. CONTR. NO.

NAVFAC DRAWING NO. 12715722

SHEET 75 OF 90

C-502

DRAWFORM REVISION: 10 MARCH 2009

FILE NAME: J:\NNSY\CIF\54918_CIF Final Design Contract\04_CADD\03_CIVIL\Construction Drawings\Final Drawings\Drydocks 6 & 7\P3B3DRYD-568932-C-502.dwg LAYOUT NAME: Layout1 PLOTTED: Wednesday, March 16, 2016 - 12:10pm USER: janaya

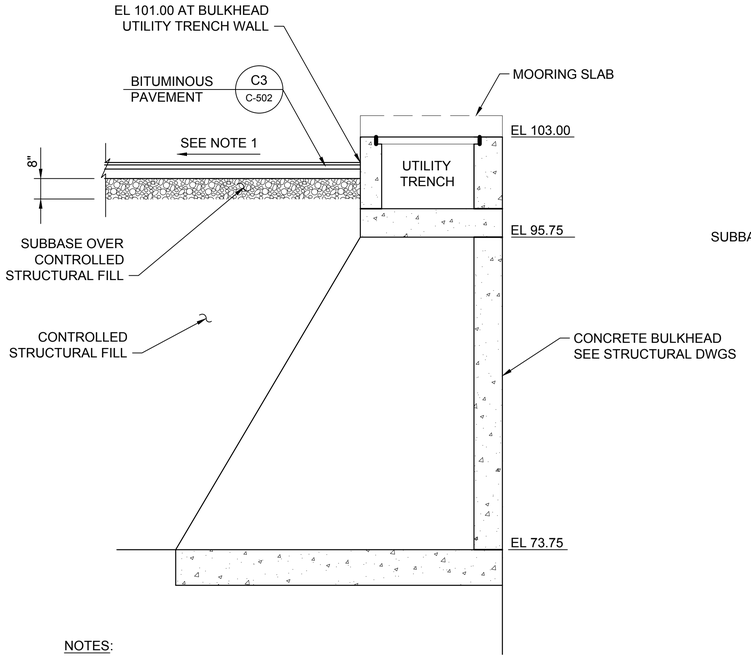

NOTES:

1. SLOPE VARIES SEE SHT CG-101
2. TOP 12" OF STRUCTURAL FILL SHALL BE COMPACTED TO 100% MAX. DRY DENSITY (ASTM D698).

BULKHEAD PAVEMENT SECTION

NOT TO SCALE — C-100 — C1

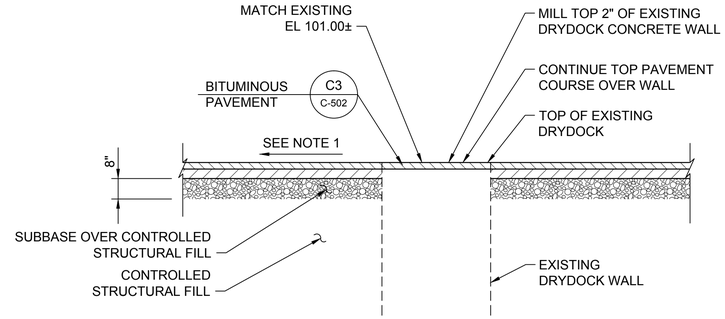

NOTES:

1. SLOPE VARIES SEE SHT CG-101
2. TOP 12" OF STRUCTURAL FILL SHALL BE COMPACTED TO 100% MAX. DRY DENSITY (ASTM D698).

DRYDOCK WALL SECTION

NOT TO SCALE — C-100 — D3

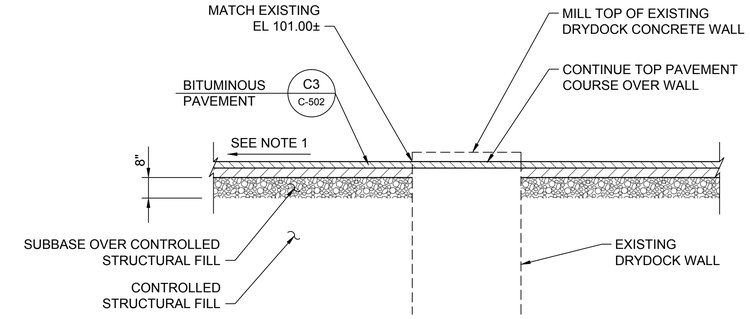

NOTES:

1. SLOPE VARIES SEE SHT C-220
2. TOP 12" OF STRUCTURAL FILL SHALL BE COMPACTED TO 100% MAX. DRY DENSITY (ASTM D698).

DRYDOCK WALL SECTION

NOT TO SCALE — C-100 — D5

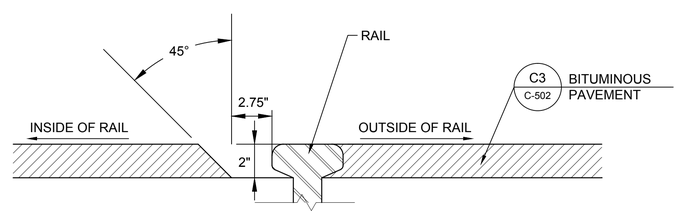

RAIL FLANGEWAY

NOT TO SCALE — B3

SYM	DESCRIPTION	DATE	APPR

NAVFAC

COLORADO REGISTERED PROFESSIONAL ENGINEER STEVEN P. HANSEN 38438

Burns & McDonnell SINCE 1898

A/E INFO

APPROVED

FOR COMMANDER NAVFAC

ACTIVITY

SATISFACTORY TO DATE

DES SPH | DRW CRJ | CHK JWS

PM John A. Moore, R.A.

BRANCH MANAGER

CHIEF ENG/ARCH

DATE 03/16/2016

DEPARTMENT OF THE NAVY
NAVAL FACILITIES ENGINEERING COMMAND
HAMPTON ROADS IPT
NORFOLK NAVAL SHIPYARD

NAVAL FACILITIES ENGINEERING COMMAND ~ MID ATLANTIC
NORFOLK, VIRGINIA
PORTSMOUTH, VIRGINIA

DEMOLITION DRYDOCKS 6 & 7

SECTIONS AND DETAILS

SCALE: AS NOTED

EPROJECT NO.: 568932

CONSTR. CONTR. NO.

NAVFAC DRAWING NO. 12715723

SHEET 76 OF 90

C-503

DRAWFORM REVISION: 10 MARCH 2009

FILE NAME: J:\NNSY\CIF\54018_CIF Final Design Contract\04_CADD\03_CIVIL\Construction Drawings\Final Drawings\Drydocks 6 & 7\P383DRYD-568932-C-503.dwg LAYOUT NAME: Layout1 PLOTTED: Wednesday, March 16, 2016 - 12:12pm USER: janaya

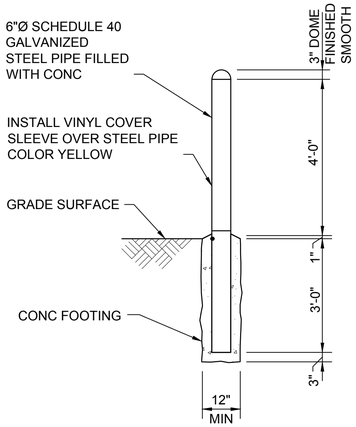

SECTION

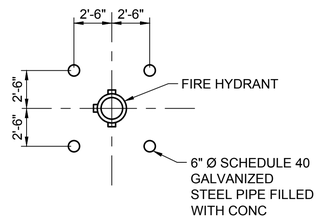

PLAN

NOTE:

(4) GUARDPOSTS REQUIRED FOR EACH HYDRANT.

GUARD POST/BOLLARD DETAIL

NOT TO SCALE — C-100 — D1

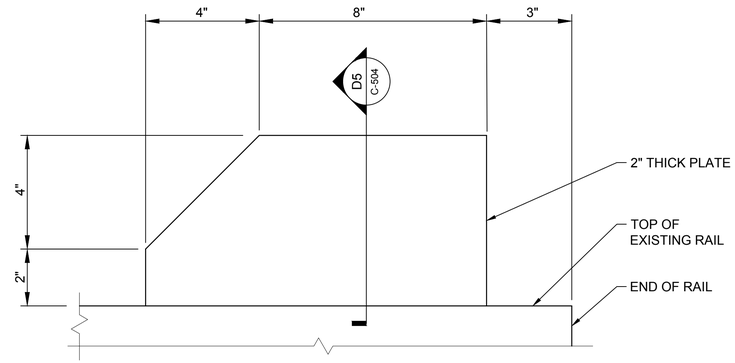

PROFILE

RAILROAD RAIL STOP DETAIL

NOT TO SCALE — C-100 — D4

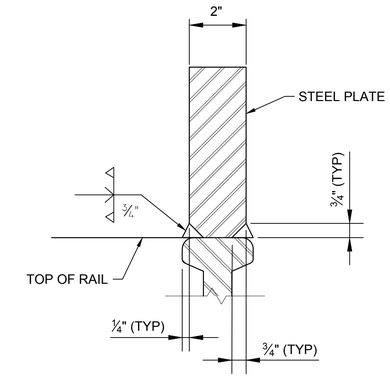

SECTION

NOT TO SCALE — C-504 — D5

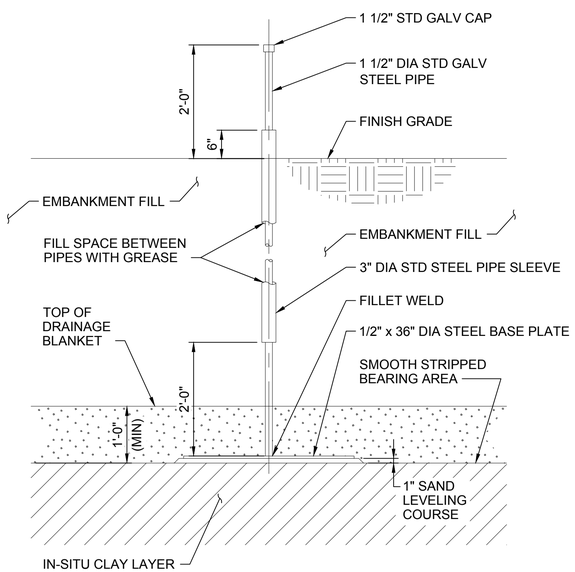

SETTLEMENT GUAGE DETAIL

NOT TO SCALE — A1

SYM	DESCRIPTION	DATE	APPR

NAVFAC

COLORADO REGISTERED PROFESSIONAL ENGINEER STEVEN P. HANSEN 38438

Burns & McDonnell SINCE 1898

A/E INFO

APPROVED

FOR COMMANDER NAVFAC

ACTIVITY

SATISFACTORY TO DATE

DES SPH DRW CRJ CHK JWS

PM John A. Moore, R.A.

BRANCH MANAGER

CHIEF ENG/ARCH

DATE 03/16/2016

DEPARTMENT OF THE NAVY
NAVAL FACILITIES ENGINEERING COMMAND
HAMPTON ROADS IPT

NAVAL FACILITIES ENGINEERING COMMAND ~ MID ATLANTIC
NORFOLK, VIRGINIA

NORFOLK NAVAL SHIPYARD
PORTSMOUTH, VIRGINIA

DEMOLITION DRYDOCKS 6 & 7

MISCELLANEOUS DETAILS

SCALE: AS NOTED

EPROJECT NO.: 568932

CONSTR. CONTR. NO.

NAVFAC DRAWING NO.
12715724

SHEET 77 OF 90

C-504

DRAWFORM REVISION: 10 MARCH 2009

FILE NAME: J:\NNSY\CIF\54018_CIF Final Design Contract\04_CADD\03_CIVIL\Construction Drawings\Final Drawings\Drydocks 6 & 7\P383DRYD-568932-C-504.dwg LAYOUT NAME: Layout1 PLOTTED: Wednesday, March 16, 2016 - 12:13pm USER: janaya