ABBREVIATIONS

AA	ALUMINUM ASSOCIATION
AASHTO	AMERICAN ASSOCIATION OF STATE HIGHWAY AND TRANSPORTATION OFFICIALS
AB	ANCHOR BOLT
ABT	ABOUT
ACI	AMERICAN CONCRETE INSTITUTE
ACO	AT CONTRACTOR'S OPTION
ADH	ADHESIVE
AGGR	AGGREGATE
AHR	ANCHOR
AHU	AIR HANDLING UNIT
AISC	AMERICAN INSTITUTE OF STEEL CONSTRUCTION
AISI	AMERICAN IRON AND STEEL INSTITUTE
AL, ALUM	ALUMINUM
ALTN	ALTERNATE
ANSI	AMERICAN NATIONAL STANDARDS INSTITUTE
APPROX	APPROXIMATE
ARCH	ARCHITECTURAL
ASTM	AMERICAN SOCIETY FOR TESTING AND MATERIALS
AWS	AMERICAN WELDING SOCIETY
B, BOT	BOTTOM
BC	BOLT CIRCLE
BETW	BETWEEN
BLDG	BUILDING
BM	BEAM
BO	BOTTOM OF
BOS	BOTTOM OF STEEL
BRG	BEARING
BRKT	BRACKET
CAP	CAPACITY
CB	CORNER BAR
CC	CLEAR COVER
C/C	CENTER TO CENTER
CE	CONCRETE EDGE
CF	CUBIC FEET
CHKR	CHECKERED
CIR	CIRCLE
CIRC	CIRCULAR
CIRCUM	CIRCUMFERENTIAL
CIS	CENTERED IN SLAB
CIW	CENTERED IN WALL
CJ	CONSTRUCTION JOINT
CL	CENTER LINE
CLJ	CONTROL JOINT
CLR	CLEAR
CM	CENTIMETER
CMU	CONCRETE MASONRY UNIT
CO	CONCRETE OPENING
COL	COLUMN
CONC	CONCRETE
CONN	CONNECTION
CONSTR	CONSTRUCTION
CONT	CONTINUOUS
CONTR	CONTRACT
COORD	COORDINATE
COR	CORNER
CRSI	CONCRETE REINFORCING STEEL INSTITUTE
CTR	CENTER
CWB	CAPILLARY WATER BARRIER
CY	CUBIC YARD
db	BAR DIAMETER
DBL	DOUBLE
DET	DETAIL
DGA	DENSE GRADED AGGREGATE
DIA	DIAMETER
DIAG	DIAGONAL
DIM	DIMENSION
DK	DECKING
DL	DEAD LOAD
DN	DOWN
DT	DOUBLE TEE
DWG	DRAWING
DWL	DOWEL
E	EAST
EA	EACH
ED	EQUIPMENT DRAIN
EF	EACH FACE
EJ	EXPANSION JOINT
EL	ELEVATION
ELEC	ELECTRICAL
EMBED	EMBEDMENT
EP	EQUIPMENT PAD
ERCP	ELLIPTICAL REINF CONC PIPE
EQ	EQUAL
EQ SP	EQUALLY SPACED
EQUIP	EQUIPMENT
EQUIV	EQUIVALENT
EW	EACH WAY
EXP	EXPANSION
EXIST	EXISTING
EXT	EXTERIOR
FAB	FABRICATE
f'c	SPECIFIED 28 DAY COMPRESSIVE STRENGTH OF CONCRETE
FD	FLOOR DRAIN
FDN	FOUNDATION
FF	FAR FACE
FL	FLOOR
FLG	FLANGE
f'm	SPECIFIED COMPRESSIVE STRENGTH OF MASONRY
FNSH	FINISH
FRP	FIBERGLASS REINFORCED PLASTIC
fs	PERMISSIBLE STEEL STRESS
FS	FAR SIDE
FT	FEET, FOOT
FUT	FUTURE
Fy, fy	YIELD STRESS
GA	GAGE, GAUGE
GAL	GALLON
GALV	GALVANIZED
GF	GRANULAR FILL
GND	GROUND
GR	GRADE
GRTG	GRATING
GS	GRATING SUPPORT
H	HIGH
HC	HOLLOW CORE
HEX	HEXAGON
HK	HOOK
HR	HANDRAIL
HORIZ	HORIZONTAL
HP	HORSEPOWER
HPT	HIGH POINT
HS	HIGH STRENGTH
HVAC	HEATING, VENTILATION, AND AIR CONDITIONING
IBC	INTERNATIONAL BUILDING CODE
ID	INSIDE DIAMETER
IF	INNER FACE
IJ	ISOLATION JOINT
INTR	INTERIOR
INVT	INVERT
JT	JOINT
K	KIP (1000 POUNDS)
KB	KNEE BRACE
KPL	KICK PLATE
kg	KILOGRAM
kN	KILONEWTON
KSF	KIPS PER SQUARE FOOT
KSI	KIPS PER SQUARE INCH
L	ANGLE, LONG
LAD	LADDER
LB	POUND
LG	LENGTH, LONG
LL	LIVE LOAD
LLH	LONG LEG HORIZONTAL
LLV	LONG LEG VERTICAL
LLO	LONG LEG OUTSTANDING
LNTL	LINTEL
LONG	LONGITUDINAL
LPT	LOW POINT
LS	LAP SPLICE
M	METER
MATL	MATERIAL
MAX	MAXIMUM
MECH	MECHANICAL
MEZZ	MEZZANINE
MFR	MANUFACTURE(R)
MH	MANHOLE
MIN	MINIMUM
MISC	MISCELLANEOUS
MJ	MECHANICAL JOINT
MK	MARK
MM	MILLIMETER
MPa	MEGAPASCAL
MS	MECHANICAL SPLICE
N	NORTH
NA	NOT APPLICABLE
NE	NORTHEAST
NF	NEAR FACE
NIC	NOT IN CONTRACT
NO	NUMBER
NOM	NOMINAL
NS	NEAR SIDE
NTS	NOT TO SCALE
NW	NORTHWEST
OC	ON CENTER
OD	OUTSIDE DIAMETER
OF	OUTER FACE
OPNG	OPENING
OPP	OPPOSITE
OSHA	OCCUPATIONAL SAFETY AND HEALTH ADMINISTRATION
OZ	OUNCE
Pa	PASCAL
PCA	PORTLAND CEMENT ASSOCIATION
PCF	POUNDS PER CUBIC FOOT
PCI	PRESTRESSED CONCRETE INSTITUTE, POUNDS PER CUBIC INCH
PED	PEDESTAL
PEN	PENETRATE
PERP	PERPENDICULAR
PJTN	PROJECTION
PL	PLATE, PROPERTY LINE
PLCS	PLACES
PLF	POUNDS PER LINEAR FOOT
PREFAB	PREFABRICATED
PSF	POUNDS PER SQUARE FOOT
PSI	POUNDS PER SQUARE INCH
PRV	PRESSURE RELIEF VALVE
PT	POINT
PVC	POLYVINYL CHLORIDE
PWS	PLASTIC WATERSTOP
R	RISERS
RAD	RADIUS
RD	ROOF DRAIN
REF	REFERENCE
REINF	REINFORCEMENT
REQD	REQUIRED
REV	REVISION
RJ	ROUGHENED JOINT
RM	ROOM
S	SOUTH
SCHED	SCHEDULE
SD	SUBDRAIN
SE	SOUTHEAST, STEEL EDGE
SECT	SECTION
SHT	SHEET
SIM	SIMILAR
SJ	SAWED JOINT
SLO	SHORT LEG OUTSTANDING
SLP	SLOPE
SLV	SLEEVE
SP	SPACE
SPECS	SPECIFICATION
SQ	SQUARE
SS, SST	STAINLESS STEEL
ST	SINGLE TEE
STD	STANDARD
STIF	STIFFENER
STIR	STIRRUP
STL	STEEL
STR	STRAIGHT, STAIR
STRL	STRUCTURAL
STRUC	STRUCTURE
SW	SOUTHWEST
SYMM	SYMMETRICAL
T	TON, TREAD, THICKNESS, TOP
TEMP	TEMPERATURE, TEMPORARY
THK	THICK
THD	THREAD
THRU	THROUGH
T&B	TOP AND BOTTOM
TOB	TOP OF BOLT
TOC	TOP OF CONCRETE
TOF	TOP OF FLOOR
TOG	TOP OF GRATING
TOS	TOP OF STEEL
TOW	TOP OF WALL
TSF	TONS PER SQUARE FOOT
TRD	TREAD
TYP	TYPICAL
UBC	UNIFORM BUILDING CODE
UNO	UNLESS NOTED OTHERWISE
VAR	VARIES
VERT	VERTICAL
W	WEST, WIDE
WD	WIDTH
WP	WORK POINT
WS	WATERSTOP
WT	WEIGHT, WATERTIGHT
WW	WASTEWATER
WWF	WELDED WIRE FABRIC
W/	WITH
W/O	WITHOUT
YD	YARD
&	AND
±	APPROXIMATELY
@	AT
x	BY
°	DEGREE (PLANE ANGLE)
Ø	DIAMETER
=	EQUAL
>	GREATER THAN
<	LESS THAN
#	NUMBER, POUND
%	PERCENT

CONCRETE REINFORCING BAR NOMENCLATURE

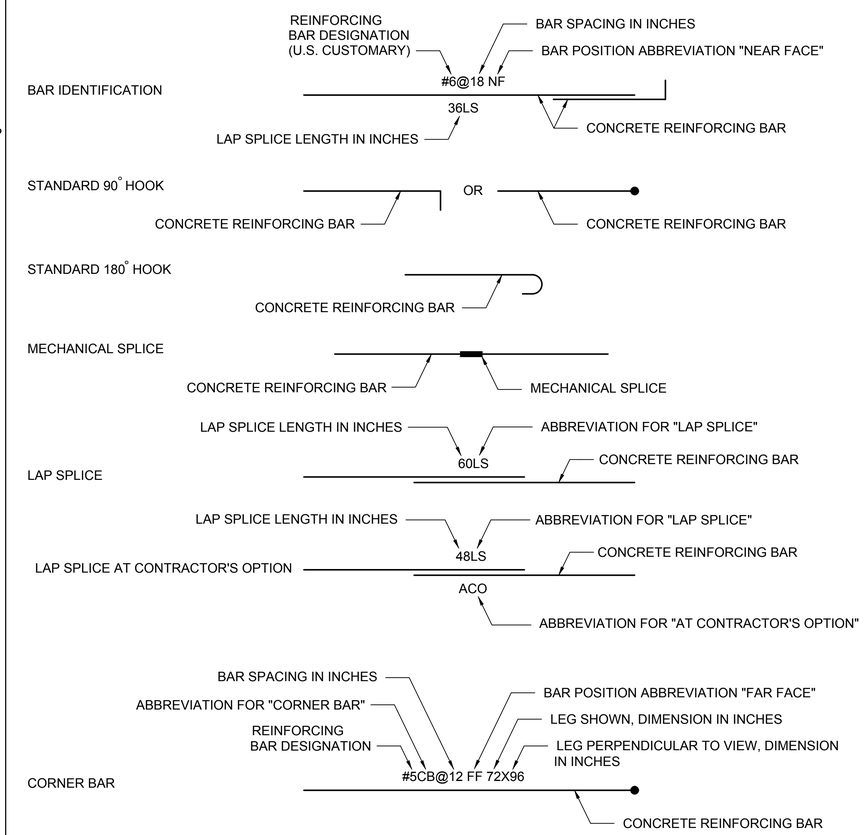

MATERIALS LEGEND

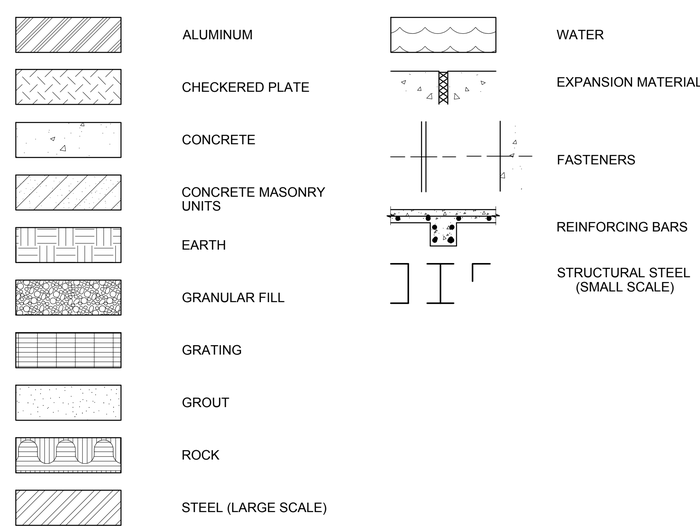

SYM	DESCRIPTION	DATE	APPR

NAVFAC

STATE OF MISSOURI
DAVID S. CHILTON
NUMBER E-24461
PROFESSIONAL ENGINEER
3/16/2016

Burns & McDonnell
SINCE 1898
A/E INFO

APPROVED
FOR COMMANDER NAVFAC
ACTIVITY
DW HARRIS 3/22/16
SATISFACTORY TO DATE
DES DC DRW AG CHK
PM John A. Moore, R.A.
BRANCH MANAGER
CHIEF ENG/ARCH
DATE 03/16/2016

DEPARTMENT OF THE NAVY
NAVAL FACILITIES ENGINEERING COMMAND
NAVAL FACILITIES ENGINEERING COMMAND ~ MID ATLANTIC
NORFOLK, VIRGINIA
HAMPTON ROADS IPT
NORFOLK NAVAL SHIPYARD
PORTSMOUTH, VIRGINIA
DEMOLITION OF DRY DOCK 6 AND 7
STRUCTURAL LEGEND

SCALE: NONE
EPROJECT NO.: 568932
CONSTR. CONTR. NO.
NAVFAC DRAWING NO. 12715725
SHEET 78 OF 90
S-001

DRAWFORM REVISION: 10 MARCH 2009

FILE NAME: J:\NNSY\CIF\54018_CIF Final Design Contract\04_CADD\04_STRUC\AutoCAD Files\DGN\DRY DOCKS\568932-DRYD_S-001.dwg LAYOUT NAME: S-001 PLOTTED: Wednesday, March 16, 2016 - 10:42am USER: janaya

GENERAL NOTES:

1. MATERIALS:
   A. MARINE CONCRETE: f'c = 5000 PSI @ 28 DAYS.
   B. REINFORCING STEEL: ASTM A615, fy = 60 KSI HOT-DIPPED GALVANIZED
2. DESIGN LOADS PER 2006 INTERNATIONAL BUILDING CODE (IBC 2006):
   A. SEE DESIGN CRITERIA ON THIS DRAWING.
   B. WIND LOAD:
      1. BASIC WIND SPEED (3-SECOND GUST): V = 108 MPH
      2. WIND IMPORTANCE FACTOR: I = 1.00
      3. WIND EXPOSURE: "D"
      4. NET FORCE COEFFICIENT, C = 1.35
   A. SEE SHEET C-001 FOR VEHICLE LOADS.
1. IMPACT = 15%
3. SEE CIVIL, MECHANICAL, AND ELECTRICAL DRAWINGS FOR SITE UTILITIES.
4. PROVIDE A 3/4 INCH CHAMFER ON ALL ABOVE GRADE EXPOSED CONCRETE JOINTS, EDGES, AND EXTERNAL CORNERS WHETHER INDICATED ON THE DRAWINGS OR NOT.
5. DESIGN STANDARDS:
   A. UFC 3-301-01 STRUCTURAL ENGINEERING, 2013
   B. UFC 4-152-01 DESIGN: PIERS AND WHARVES, 2005
   C. UFC 4-159-03 DESIGN: MOORINGS, 2005
   D. ASCE 7, MINIMUM DESIGN LOADS FOR BUILDINGS AND OTHER STRUCTURES, 2005
   E. ACI 318, BUILDING CODE REQUIREMENTS FOR STRUCTURAL CONCRETE, 2008

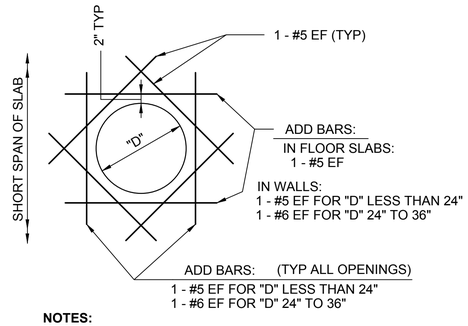

NOTES:

1. ALL BAR MINIMUM LENGTHS TO BE ("D" + 3'-6") WITH BARS CENTERED ON OPENING.
2. FOR OPENINGS LESS THAN 12" IN DIAMETER, THE ADD BARS ARE NOT REQUIRED IF NO REINFORCING IS CUT BY THE OPENING.
3. SHORT SPAN OF SLAB = LESSER DISTANCE BETWEEN SUPPORT MEMBERS.
4. REINFORCE OPENINGS WITH "D" LARGER THAN 36" AS INDICATED ON THE DRAWINGS. IF NOT INDICATED, CONTACT THE ENGINEER.

UNSLEEVED OPENING CO-1

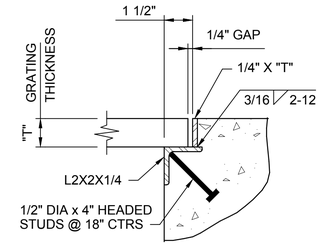

NOTE:
MITER, WELD AND SMOOTH GRIND ANGLES AT ALL CORNERS. ALL ITEMS GALVANIZED STEEL, UNO.

CE-4

CJ EXAMPLES

CONSTRUCTION JOINT LOCATIONS ARE DEFINED IN PLAN OR IN SECTION ON OTHER DRAWINGS. REFER TO THE FOLLOWING EXAMPLES OF CONSTRUCTION JOINTS SHOWN IN SECTION. THE SECTIONS SHOWN ON OTHER DRAWINGS WILL DEFINE THE REQUIRED "CJ" DETAIL. REINFORCING IS NOT SHOWN ON CJ DETAILS FOR CLARITY, HOWEVER, ALL REINFORCING SHALL BE CONTINUOUS THROUGH CONSTRUCTION JOINTS UNLESS NOTED OTHERWISE.

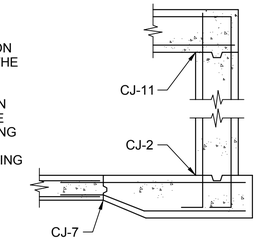

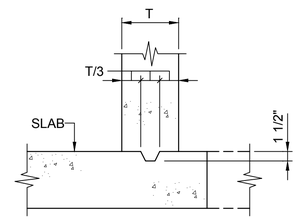

CJ-2

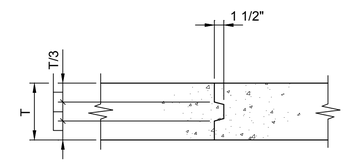

CJ-7

NOTE:
USE FOR VERTICAL AND HORIZONTAL JOINTS.

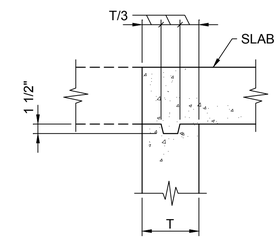

CJ-11

CONCRETE REINFORCING BAR LAP SPLICES AND TENSION DEVELOPMENT LENGTHS IN INCHES											
BAR SIZE	LAP CLASS	3/4" CC		1" CC		1 1/2" CC		2" CC		3" CC	
		TOP	OTHER	TOP	OTHER	TOP	OTHER	TOP	OTHER	TOP	OTHER
3	A	13	12	13	12	13	12	13	12	13	12
	B	17	16	17	16	17	16	17	16	17	16
4	A	22	20	18	16	18	16	18	16	18	16
	B	29	25	23	20	23	20	23	20	23	20
5	A	32	29	26	23	22	20	22	20	22	20
	B	42	37	34	30	29	25	29	25	29	25
6	A	44	39	36	32	26	23	26	23	26	23
	B	57	50	47	41	34	30	34	30	34	30
7	A	70	62	58	51	43	38	38	34	38	34
	B	91	80	75	67	56	50	50	44	50	44
8	A	87	77	73	64	55	48	44	39	44	39
	B	113	100	94	83	71	63	57	50	57	50
9	A	105	93	89	78	67	59	54	48	49	44
	B	137	121	115	101	87	77	70	62	64	56
10	A	126	112	107	95	82	73	67	59	55	49
	B	164	145	139	123	107	94	87	76	72	64
11	A	148	131	127	112	98	87	80	71	62	54
	B	193	170	164	145	127	112	104	92	80	70

NOTES:

1. PROVIDE SPLICE LENGTHS AS INDICATED IN TABLE UNLESS NOTED OTHERWISE.
2. TABULATED VALUES ARE BASED ON ZINC COATED GRADE 60 REINFORCING BARS AND NORMAL WEIGHT CONCRETE.
3. LAP SPLICE LENGTHS INDICATED IN TABLE ARE BASED UPON THE MINIMUM CENTER-TO-CENTER (C/C) BAR SPACING BEING GREATER THAN TWICE THE CONCRETE CLEAR COVER (CC) PLUS ONE BAR DIAMETER.
4. TOP BARS ARE HORIZONTAL BARS WITH MORE THAN 12" OF CONCRETE CAST BELOW THE BARS.
5. USE LAP CLASS B, UNO

DESIGN CRITERIA:

LOAD CASES:

LOAD CASE 1: CONSTRUCTION CONDITION
SURCHARGE = 250 PSF
BACKFILL LATERAL (DRY) = 41 PCF
RIVER HYDROSTATIC = 0 PCF
MOORING = 0 KIPS

LOAD CASE 2: IN-SERVICE CONDITION
SURCHARGE = 600 PSF
BACKFILL LATERAL (DRY ABOVE MHW) = 41 PCF
BACKFILL LATERAL (SUBMERGED) = 83 PCF
RIVER HYDROSTATIC = 62.4 PCF
MOORING = 70 KIPS

LOAD CASE 3: MAINTENANCE/FUTURE CONSTRUCTION CONDITION (RIVER COFFERED TO ALLOW ACCESS TO THE FRONT OF THE BULKHEAD IN THE DRY)
SURCHARGE = 600 PSF
BACKFILL LATERAL (DRY ABOVE MHW) = 41 PCF
BACKFILL LATERAL (SUBMERGED) = 83 PCF
RIVER HYDROSTATIC = 0 PCF
MOORING = 0 KIPS

CONCRETE CAST AGAINST & PERMANENTLY EXPOSED TO EARTH..... 3"

CONCRETE EXPOSED TO EARTH, WEATHER & WATERFRONT:
#6 THRU # 18 BARS..... 3"
#5 BAR, W31 OR D31 WIRE & SMALLER..... 2"

CONCRETE NOT EXPOSED TO WEATHER OR IN CONTACT WITH GROUND :
SLABS, WALLS & JOISTS :
#14 & #18 BARS ..... 1 1/2"
#11 & SMALLER..... 3/4"

BEAMS AND COLUMNS :
PRIMARY REINF. TIES, STIRRUPS & SPIRALS ..... 1 1/2"

CONCRETE PROTECTION FOR REINF. (NON-PRESTRESSED, CAST IN PLACE

UNLESS NOTED OTHERWISE

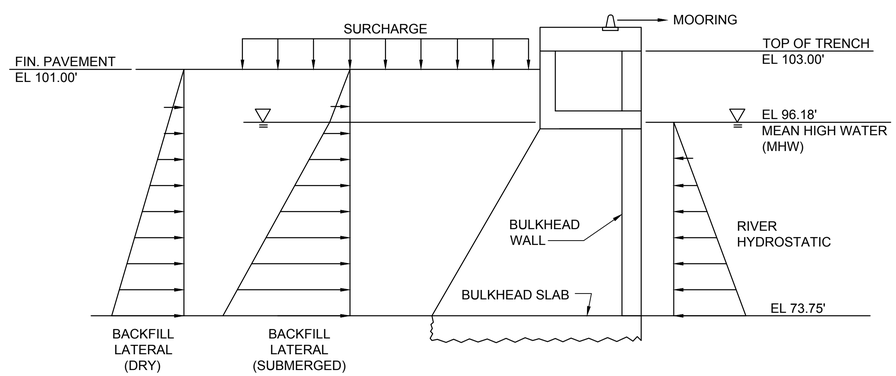

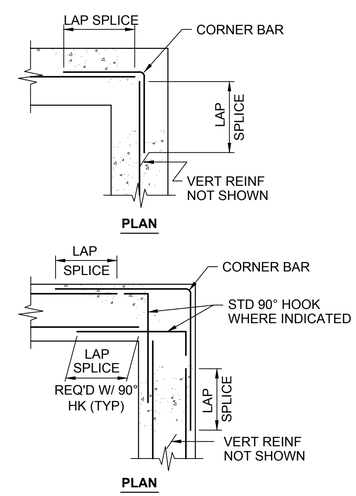

HORIZONTAL WALL REINFORCEMENT DETAILS CORNERS (UNO)

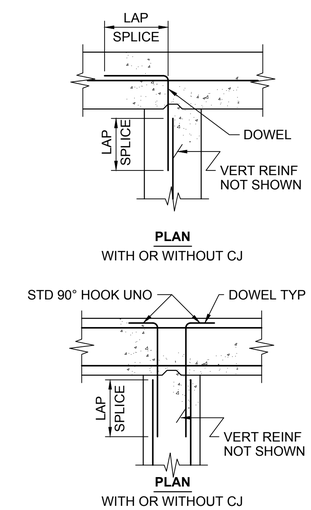

HORIZONTAL WALL REINFORCEMENT DETAILS INTERSECTIONS (UNO)

SYM	DESCRIPTION	DATE	APPR

NAVFAC

STATE OF MISSOURI — DAVID S. CHILTON — NUMBER E-21461 — REGISTERED PROFESSIONAL ENGINEER — 3/16/2016

Burns & McDonnell — SINCE 1898

A/E INFO

APPROVED

FOR COMMANDER NAVFAC

ACTIVITY

SATISFACTORY TO DATE

DES DC | DRW ACG | CHK

PM John A. Moore, R.A.

BRANCH MANAGER

CHIEF ENG/ARCH

DATE 03/16/2016

DEPARTMENT OF THE NAVY
NAVAL FACILITIES ENGINEERING COMMAND
HAMPTON ROADS IPT
NORFOLK NAVAL SHIPYARD

NAVAL FACILITIES ENGINEERING COMMAND ~ MID ATLANTIC
NORFOLK, VIRGINIA
PORTSMOUTH, VIRGINIA

DEMOLITION OF DRY DOCKS 6 AND 7

NOTES, DESIGN CRITERIA, AND STANDARD DETAILS

SCALE: NONE
EPROJECT NO.: 568932
CONSTR. CONTR. NO.
NAVFAC DRAWING NO. 12715726
SHEET 79 OF 90

S-002

DRAWFORM REVISION: 10 MARCH 2009

FILE NAME: J:\NNSY\CIF\54018_CIF Final Design Contract\04_CAD\04_STRUC\AutoCAD Files\DGN\DRY DOCKS\568932-DRYD_S-002.dwg LAYOUT NAME: S-002 PLOTTED: Thursday, March 17, 2016 - 12:53pm USER: janaya

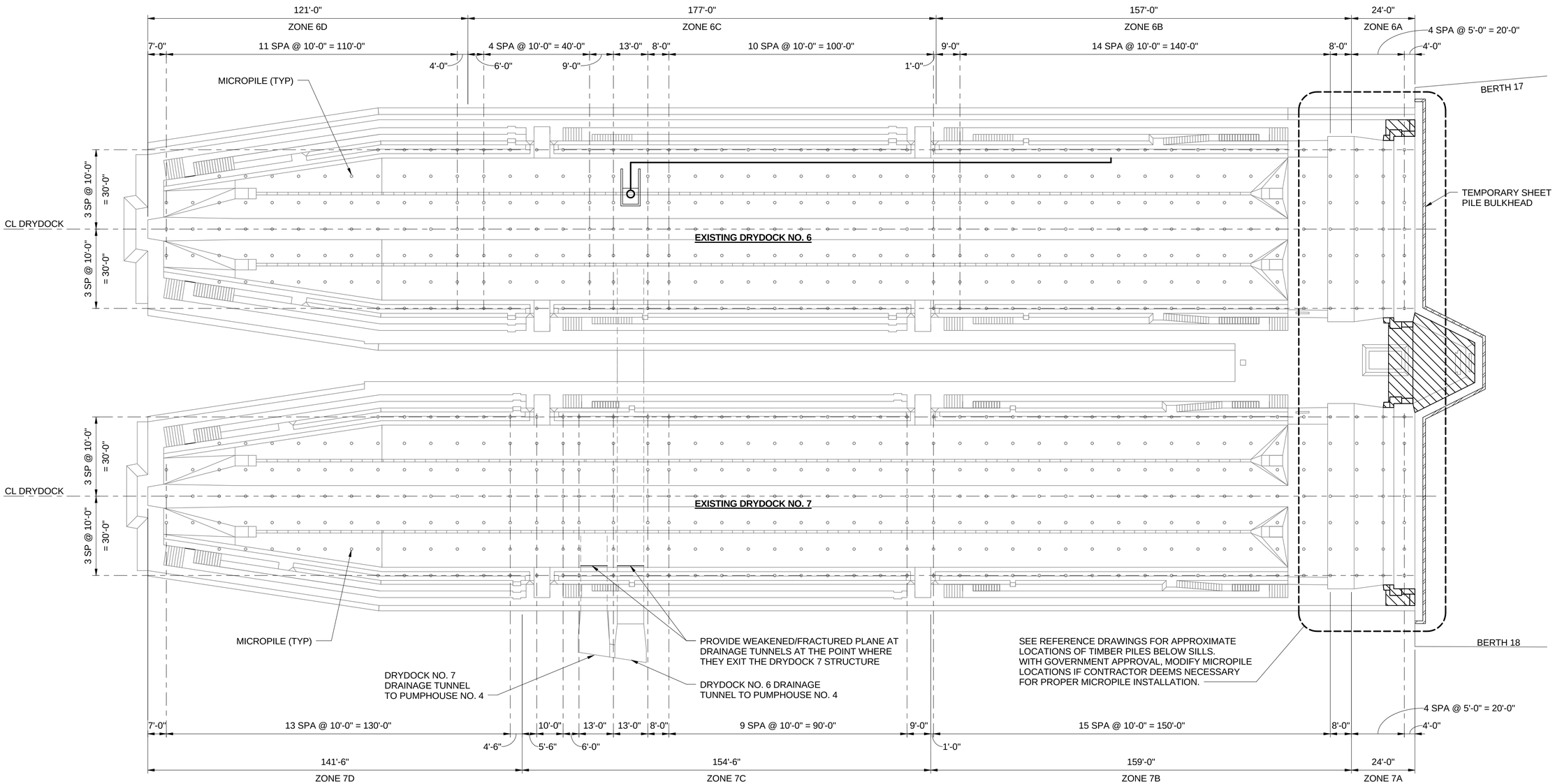

MICROPILE PLAN

SCALE: 1" = 20'-0"

DRYDOCKS 6 AND 7 MICROPILE NOTES:

1. CONTRACTOR SHALL ADJUST LOCATION OF MICROPILES AS NECESSARY TO AVOID INSTALLATION THROUGH DRAINAGE PIPES AND TUNNELS, ON EDGES OF CONCRETE SURFACES, AND OTHER LOCATIONS WHERE BOND WITH DRYDOCK CONCRETE MAY BE JEOPARDIZED. OBTAIN GOVERNMENT APPROVAL IF PLANNED LOCATION MUST BE ADJUSTED GREATER THAN SPECIFIED TOLERANCE.

SYM	DESCRIPTION	DATE	APPR

NAVFAC

STATE OF MISSOURI
DAVID S. CHILTON
NUMBER E-24461
REGISTERED PROFESSIONAL ENGINEER
3/16/2016

Burns & McDonnell
SINCE 1898

A/E INFO

APPROVED

FOR COMMANDER NAVFAC

ACTIVITY

SATISFACTORY TO DATE

DES JS | DRW JRA | CHK

PM JOHN A. MOORE, R.A.

BRANCH MANAGER

CHIEF ENGIARCH

DATE 03/16/2016

DEPARTMENT OF THE NAVY
NAVAL FACILITIES ENGINEERING COMMAND
HAMPTON ROADS IPT

NAVAL FACILITIES ENGINEERING COMMAND ~ MID ATLANTIC
NORFOLK, VIRGINIA

NORFOLK NAVAL SHIPYARD
PORTSMOUTH, VIRGINIA

DEMOLITION OF DRYDOCKS 6 AND 7

MICROPILE UNDERPINNING

SCALE: 1" = 20'-0"

EPROJECT NO.: 568932

CONSTR. CONTR. NO.

NAVFAC DRAWING NO. 12715727

SHEET 78 OF 90

S-100

DRAWFORM REVISION: 10 MARCH 2009

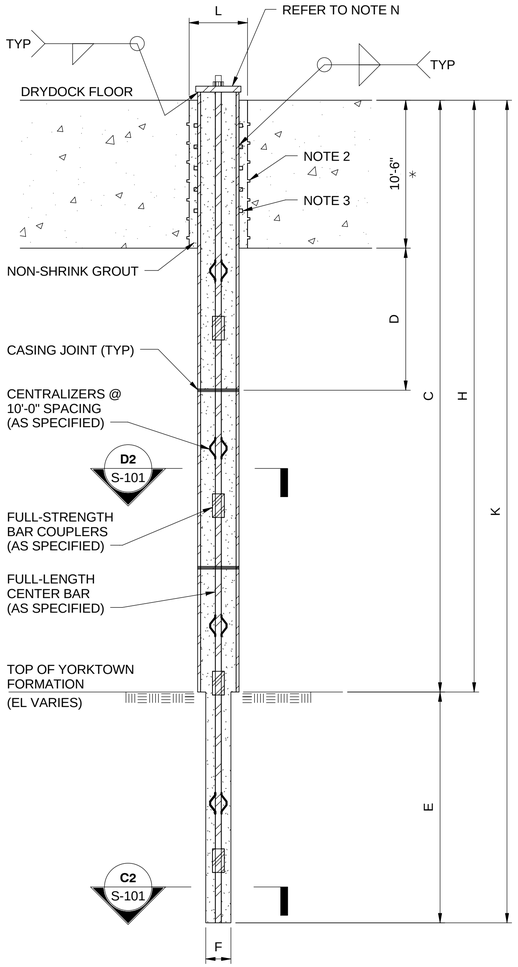

* DRYDOCK FLOOR THICKNESS BASED ON RECORD DRAWINGS.

MICROPILE DETAIL

SCALE: NOT TO SCALE

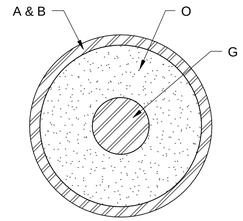

UPPER CASED SECTION

SECTION D2

SCALE: NOT TO SCALE — S-101

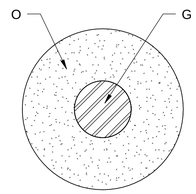

BOND ZONE (UNCASED)

SECTION C2

SCALE: NOT TO SCALE — S-101

MICROPILES INSTALLED IN THE WET									
DIMENSION	UNIT	DRYDOCK 6				DRYDOCK 7			
		ZONE A	ZONE B	ZONE C	ZONE D	ZONE A	ZONE B	ZONE C	ZONE D
A	IN	9.625	9.625	9.625	9.625	9.625	9.625	9.625	9.625
B	IN	0.472	0.472	0.472	0.472	0.472	0.472	0.472	0.472
C	FT	28	30	27	20	28	30	31	31
E	FT	40	40	40	40	40	40	40	40
F	IN	8.5	8.5	8.5	8.5	8.5	8.5	8.5	8.5
G	BAR SIZE	#24	#24	#24	#24	#24	#24	#24	#24
H	FT	27	29	19	19	48	50	33	22
K	FT	68	70	67	60	68	90	73	71

MICROPILES INSTALLED IN THE DRY									
DIMENSION	UNIT	DRYDOCK 6				DRYDOCK 7			
		ZONE A	ZONE B	ZONE C	ZONE D	ZONE A	ZONE B	ZONE C	ZONE D
A	IN	9.625	9.625	9.625	9.625	9.625	9.625	9.625	9.625
B	IN	0.545	0.545	0.545	0.545	0.545	0.545	0.545	0.545
C	FT	28	30	27	20	28	30	31	31
E	FT	53	53	53	53	53	53	53	53
F	IN	8.5	8.5	8.5	8.5	8.5	8.5	8.5	8.5
G	BAR SIZE	#28	#28	#28	#28	#28	#28	#28	#28
H	FT	27	29	19	19	48	50	33	22
K	FT	81	83	80	73	101	103	86	84

MINIMUM CAPACITIES OF MICROPILES INSTALLED IN THE WET	
COMPRESSION	135 TONS
SHEAR/MOMENT	SEE NOTE 4
UPLIFT	90 TONS

MINIMUM CAPACITIES OF MICROPILES INSTALLED IN THE DRY	
COMPRESSION	180 TONS
SHEAR/MOMENT	SEE NOTE 4
UPLIFT	10 TONS

ASSUMED APPLIED LOADING:
UNIFORM LIVE LOAD OF 100 PSF OVER ENTIRE DRYDOCK 6 & 7 FOOTPRINT ACTING AT AN ELEVATION OF THE TOP OF THE DRYDOCK FLOOR. TRANSIENT CRANE LOADS OF ABOUT A LOAD OF ABOUT 21,130 POUNDS PER LINEAL FOOT PER RAIL. FUTURE FOUNDATION ELEMENTS SHALL NEED TO BE ANALYZED TO VERIFY THAT ASSUMED APPLIED LOADING DOES NOT EXCEED ASSUMED LOADING.

SHEET NOTES:

1. ALL WELDS SHALL BE SIZED BY MICROPILE SUBCONTRACTOR.
2. PROVIDE CHIPPED GROOVE SURFACE FOR BOND TO EXISTING CONCRETE UNLESS MICROPILE SUBCONTRACTOR PROVIDES DOCUMENTATION OF SUFFICIENT JOINT CONNECTION CAPACITY.
3. WELD RINGS DESIGNED BY MICROPILE SUBCONTRACTOR.
4. FOR REQUIRED SHEAR AND MOMENT CAPACITIES AT VARIOUS DEPTHS SEE PROJECT SPECIFICATION EXHIBIT 31 63 33.
5. CASING SHALL HAVE A MINIMUM YIELD STRENGTH OF 80 KSI.
6. PILE CONSTRUCTION SHALL BE TYPE B, AS DEFINED IN FHWA NHI-05-039.
7. THE MATERIALS, EQUIPMENT, DESIGN PROCEDURES, AND INSTALLATION TECHNIQUES UTILIZED BY THE MICROPILE SUBCONTRACTOR FOR THE DESIGN AND CONSTRUCTION OF MICROPILE FOUNDATIONS SHALL COMPLY WITH THE APPLICABLE SPECIFICATIONS.
8. THE MICROPILE FOUNDATION SHALL BE A PERFORMANCE-BASED SYSTEM TO BE DESIGNED BY THE CONTRACTOR'S GEOTECHNICAL ENGINEER, LICENSED IN THE STATE WHERE THE PROJECT IS LOCATED. THE CONTRACTOR'S GEOTECHNICAL ENGINEER SHALL SUBMIT MICROPILE DESIGN CALCULATIONS AS SPECIFIED IN SECTION 31 63 33.

MICROPILE DETAIL NOTES:

A: OUTSIDE DIAMETER OF STEEL CASING (OD).
B: WALL THICKNESS OF STEEL CASING.
C: REQUIRED MINIMUM LENGTH OF STEEL CASING (FROM TOP OF DRYDOCK FLOOR)
D: NO CASING JOINTS WILL BE ALLOWED IN THE UPPER 10 FEET (D) BELOW BASE OF DRYDOCK FLOOR (UNLESS SUBCONTRACTOR'S FINAL PILE DESIGN PROVIDES DOCUMENTATION OF SUFFICIENT CASING JOINT MOMENT RESISTING CAPACITY AT SHALLOWER DEPTHS).
E: REQUIRED MINIMUM LENGTH OF UNCASED MICROPILE SECTION WITHIN YORKTOWN FORMATION (MAY VARY FROM TOTAL LENGTH OF UNCASED MICROPILE SECTION)
F: DIAMETER OF BOND ZONE.
G: FULL-LENGTH CENTER BAR SHALL BE MINIMUM GRADE 75 KSI, PER THE PILE SCHEDULE.
H: ESTIMATED PILE LENGTH FROM TOP OF DRYDOCK FLOOR TO TOP OF YORKTOWN FORMATION.
I: NOT USED
J: NOT USED
K: ESTIMATED TOTAL PILE LENGTH FROM TOP OF DRYDOCK FLOOR TO PILE TIP (VARIES).
L: OVERSIZED CORE HOLE DIAMETER BY MICROPILE SUBCONTRACTOR
M: NOT USED
N: THE CONTRACTOR SHALL BE RESPONSIBLE FOR THE DESIGN AND INSTALLATION OF PILE HEAD ASSEMBLY TO TRANSFER THE LOAD TO THE PILE CAP SYSTEM, PER THE PILE SCHEDULE.
O: PILE GROUT SHALL HAVE A MINIMUM COMPRESSIVE STRENGTH OF 5,000 PSI FOR MICROPILES INSTALLED IN THE DRY, 4,000 PSI FOR MICROPILES INSTALLED IN THE WET.

SYM	DESCRIPTION	DATE	APPR

NAVFAC

STATE OF MISSOURI — DAVID S. CHILTON — NUMBER E-24461 — REGISTERED PROFESSIONAL ENGINEER — 3/16/2016

Burns & McDonnell — SINCE 1898

A/E INFO

APPROVED
FOR COMMANDER NAVFAC
ACTIVITY
SATISFACTORY TO DATE
DES JS | DRW JRA | CHK
PM JOHN A. MOORE, R.A.
BRANCH MANAGER
CHIEF ENG/ARCH
DATE 03/16/2016

DEPARTMENT OF THE NAVY
NAVAL FACILITIES ENGINEERING COMMAND
HAMPTON ROADS IPT
NAVAL FACILITIES ENGINEERING COMMAND ~ MID ATLANTIC
NORFOLK, VIRGINIA
NORFOLK NAVAL SHIPYARD
PORTSMOUTH, VIRGINIA
DEMOLITION OF DRYDOCKS 6 AND 7
MICROPILE DETAILS

SCALE: As indicated
EPROJECT NO.: 568932
CONSTR. CONTR. NO.
NAVFAC DRAWING NO. 12715728
SHEET 79 OF 90
S-101

DRAWFORM REVISION: 10 MARCH 2009

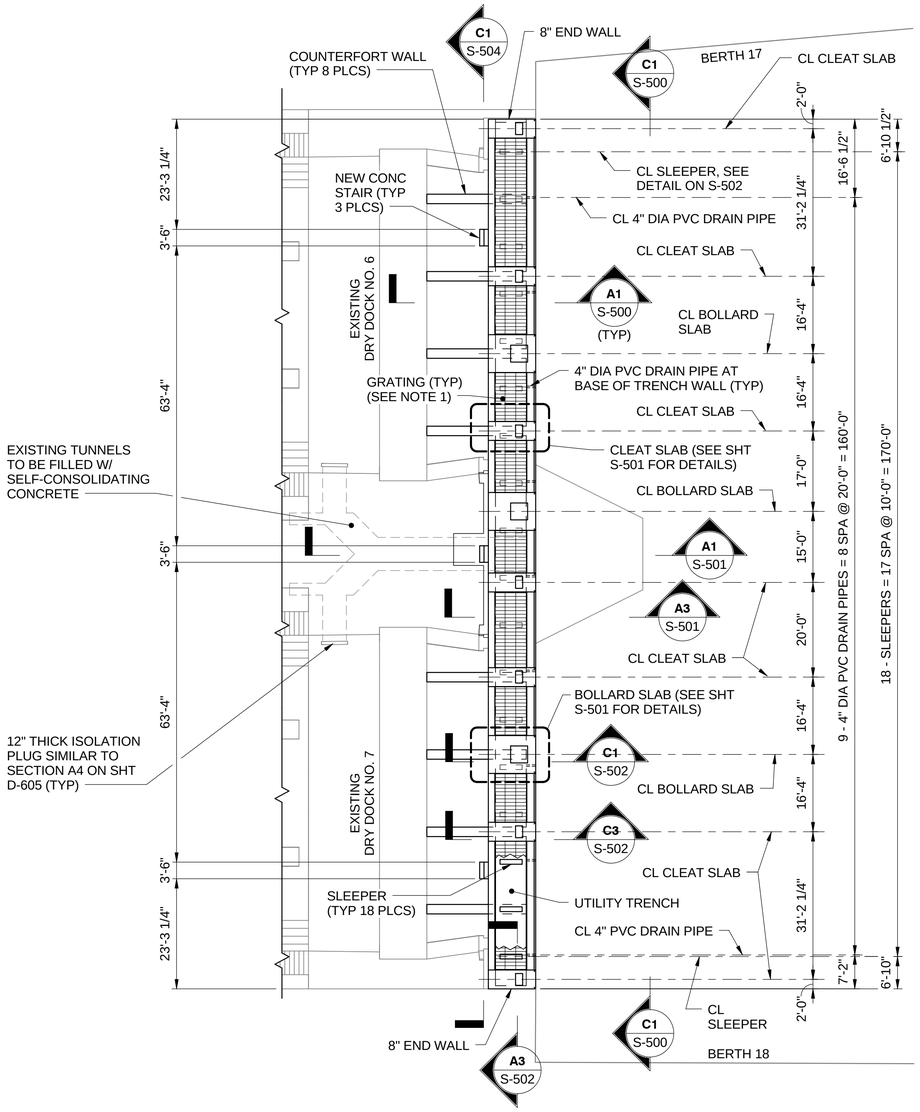

BULKHEAD PLAN - EL 103.00' NOTES:

1. GRATING SHALL BE NAAMM TYPE W-19-4 (2 1/2"x1/4") HEAVY DUTY GALVANIZED STEEL GRATING. PROVIDE SLIP RESISTANT TOP SURFACE AND BANDED EDGES.
2. PROVIDE TYPICAL NOSING AT TOP OF BULKHEAD WALL WATERSIDE EDGE FOR ABRASION PROTECTION OF MOORING LINES.
3. BOLLARDS ARE A BID ALTERNATE OPTION.

BULKHEAD PLAN - EL 103.00'

SCALE: 1/16" = 1'-0"

PLAN NORTH

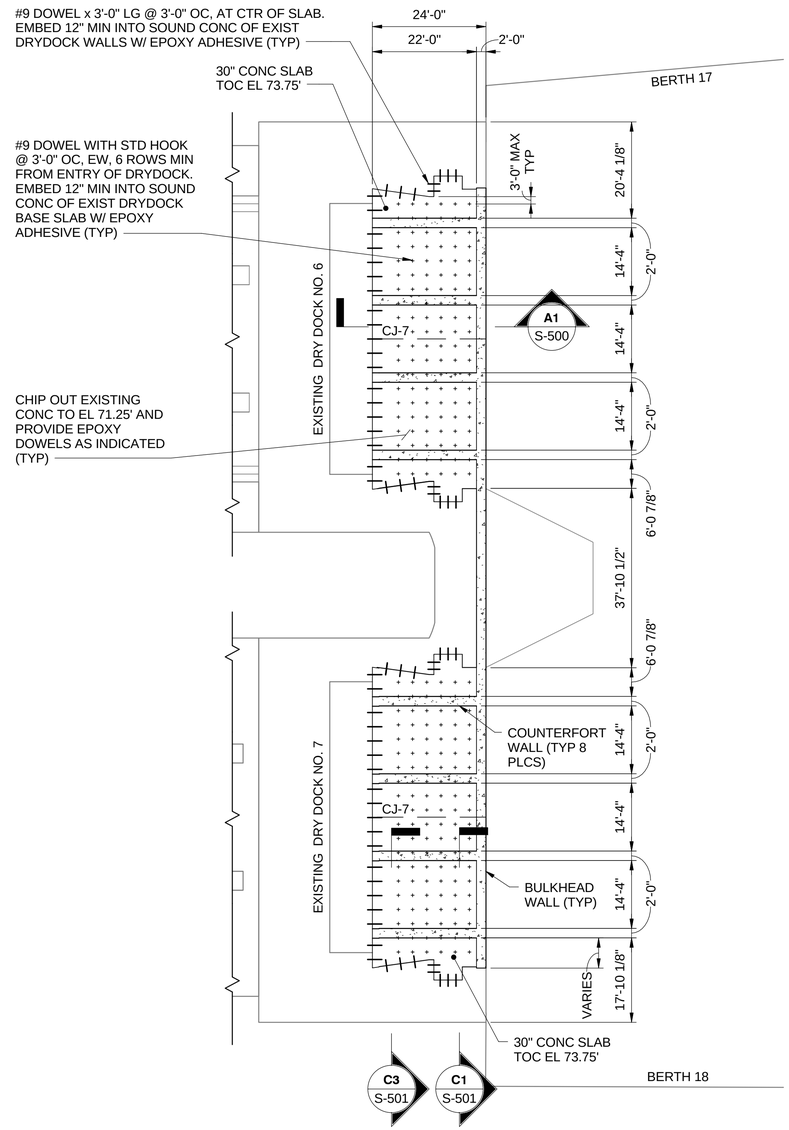

BULKHEAD PLAN - EL 73.75'

SCALE: 1/16" = 1'-0"

PLAN NORTH

GRAPHIC SCALE

1/16" = 1'-0"

0 8' 16' 32'

SCALE IN FEET

SYM	DESCRIPTION	DATE	APPR

NAVFAC

STATE OF MISSOURI
DAVID S. CHILTON
NUMBER
PE-24461
PROFESSIONAL ENGINEER
3/16/2016

Burns & McDonnell
SINCE 1898

A/E INFO

APPROVED

FOR COMMANDER NAVFAC

ACTIVITY

SATISFACTORY TO DATE

DES DS DRW JRA CHK

PM JOHN A. MOORE, R.A.

BRANCH MANAGER

CHIEF ENG/ARCH

DATE 03/16/2016

DEPARTMENT OF THE NAVY
NAVAL FACILITIES ENGINEERING COMMAND
HAMPTON ROADS IPT
NAVAL FACILITIES ENGINEERING COMMAND ~ MID ATLANTIC
NORFOLK, VIRGINIA
NORFOLK NAVAL SHIPYARD
PORTSMOUTH, VIRGINIA

DEMOLITION OF DRYDOCKS 6 AND 7

BULKHEAD PLANS

SCALE: 1/16" = 1'-0"

EPROJECT NO.: 568932

CONSTR. CONTR. NO.

NAVFAC DRAWING NO.
12715729

SHEET 80 OF 90

S-102

DRAWFORM REVISION: 10 MARCH 2009

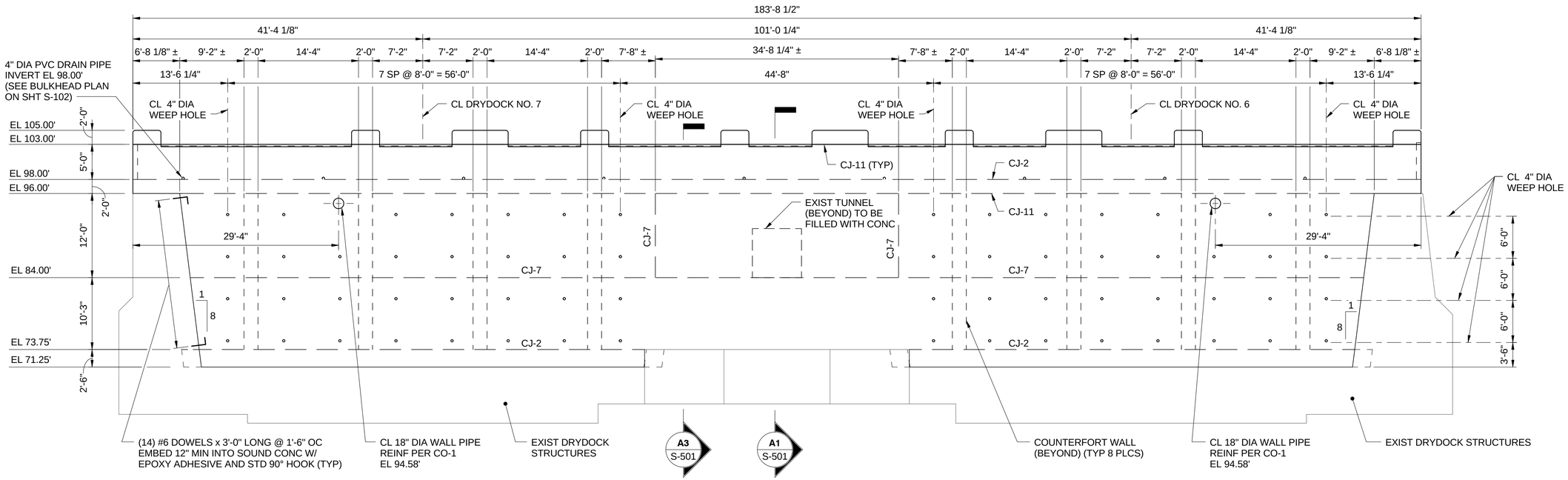

SECTION

SCALE: 1/8" = 1'-0" S-102 C1

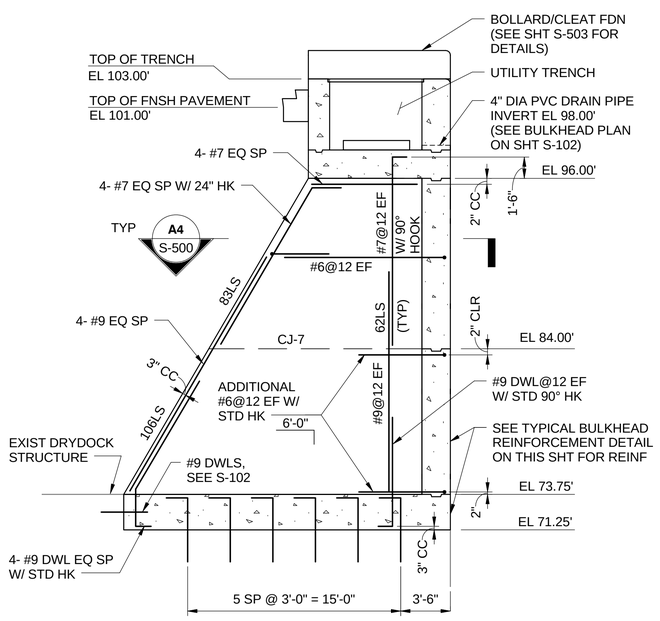

SECTION

SCALE: 3/16" = 1'-0" S-102 A1

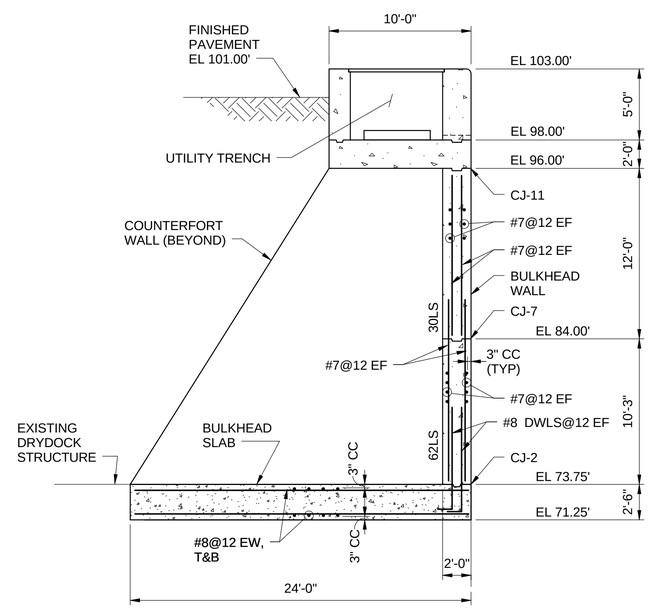

TYPICAL BULKHEAD REINFORCEMENT DETAIL

SCALE: 3/16" = 1'-0"

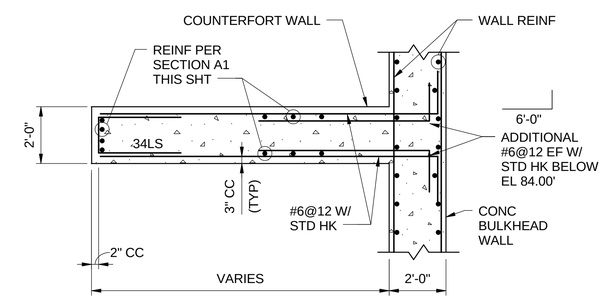

SECTION

SCALE: 3/8" = 1'-0" S-500 A4

GRAPHIC SCALE

1/8" = 1'-0" 0 4' 8' 16' SCALE IN FEET

3/16" = 1'-0" 0 4' 8' 12' SCALE IN FEET

3/8" = 1'-0" 0 2' 4' 6' SCALE IN FEET

SYM	DESCRIPTION	DATE	APPR

NAVFAC

STATE OF MISSOURI
DAVID S. CHILTON
NUMBER
PE-24461
PROFESSIONAL ENGINEER
3/16/2016

Burns & McDonnell
SINCE 1898

A/E INFO

APPROVED

FOR COMMANDER NAVFAC

ACTIVITY

SATISFACTORY TO DATE

DES DS DRW JRA CHK

PM JOHN A. MOORE, R.A.

BRANCH MANAGER

CHIEF ENGIARCH

DATE 03/16/2016

DEPARTMENT OF THE NAVY
NAVAL FACILITIES ENGINEERING COMMAND
HAMPTON ROADS IPT
NAVAL FACILITIES ENGINEERING COMMAND – MID ATLANTIC
NORFOLK, VIRGINIA
NORFOLK NAVAL SHIPYARD
PORTSMOUTH, VIRGINIA
DEMOLITION OF DRYDOCKS 6 AND 7
BULKHEAD SECTIONS AND DETAIL

SCALE: AS NOTED

EPROJECT NO.: 568932

CONSTR. CONTR. NO.

NAVFAC DRAWING NO. 12715730

SHEET 81 OF 90

S-500

DRAWFORM REVISION: 10 MARCH 2009

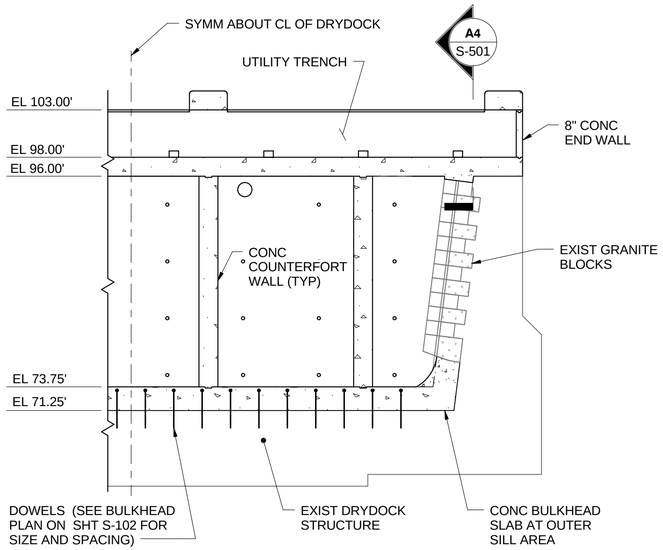

SECTION

SCALE: 1/8" = 1'-0" S-102 **C1**

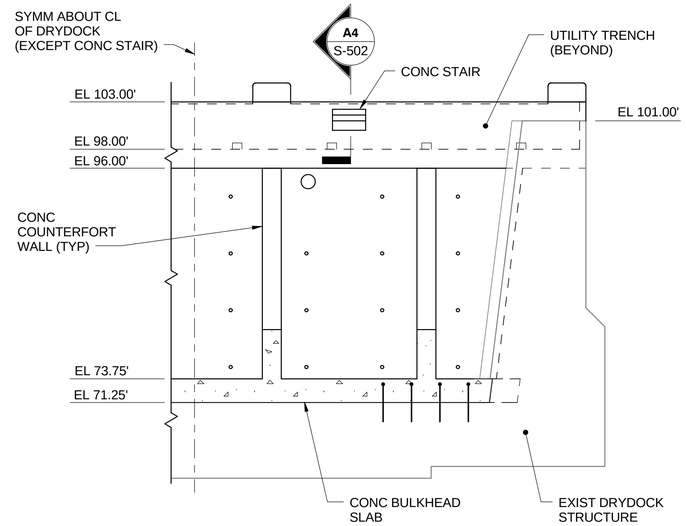

SECTION

SCALE: 1/8" = 1'-0" S-102 **C3**

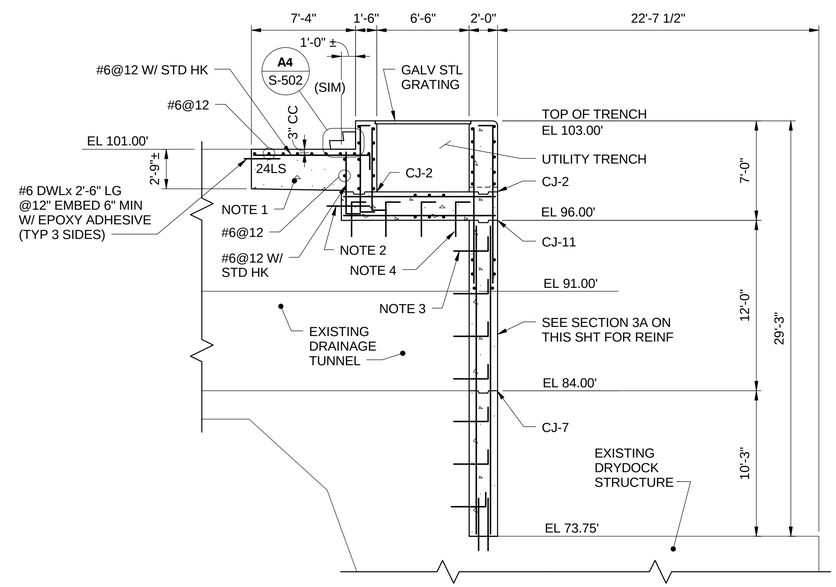

SECTION A1 NOTES:

1. EXISTING POWER CAPSTAN PIT. FILL WITH CONCRETE.
2. #6 DOWEL x 3'-0" LONG @ 3'-0" OC AT CENTER OF SLAB. EMBED 12" MIN WITH EPOXY ADHESIVE (TYP).
3. #6 DOWEL @ 3'-0" EW WITH STANDARD HOOK. EMBED 12" MIN WITH EPOXY ADHESIVE (TYP).
4. 4 EQUALLY SPACED ROWS OF #6 DOWEL @ 3'-0" OC. EMBED 12" MIN WITH EPOXY ADHESIVE AND STANDARD HOOK.

SECTION

SCALE: 3/16" = 1'-0" S-500, S-102 **A1**

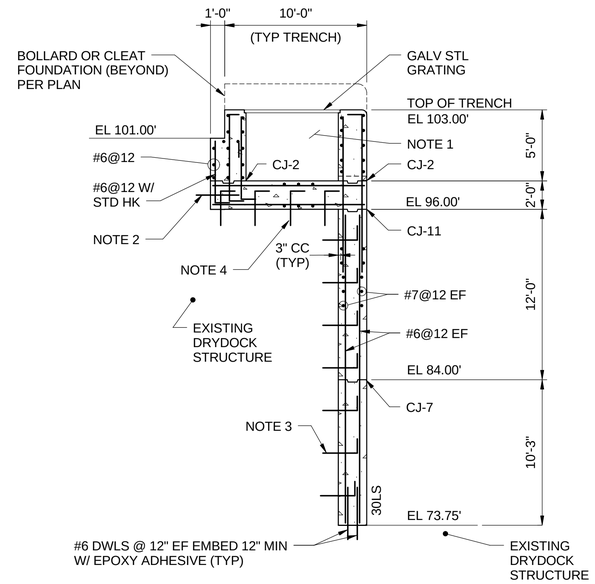

SECTION A3 NOTES:

1. SEE TYPICAL SECTION THRU UTILITY TRENCH ON SHT S-502 FOR TRENCH REINFORCEMENT.
2. #6 DOWEL x 3'-0" LONG @ 3'-0" OC AT CENTER OF SLAB. EMBED 12" MIN WITH EPOXY ADHESIVE (TYP).
3. #6 DOWEL @ 3'-0" EW WITH STANDARD HOOK. EMBED 12" MIN WITH EPOXY ADHESIVE (TYP).
4. 4 EQUALLY SPACED ROWS OF #6 DOWEL @ 3'-0" OC. EMBED 12" MIN WITH EPOXY ADHESIVE AND STANDARD HOOK.

SECTION

SCALE: 3/16" = 1'-0" S-102 **A3**

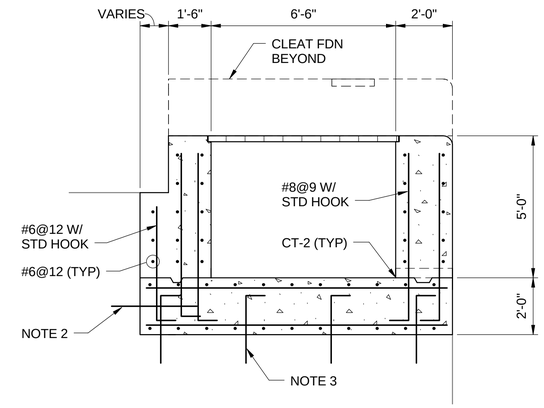

SECTION A4 NOTES:

1. SEE TYPICAL SECTION THRU UTILITY TRENCH ON SHT S-502 FOR REINFORCEMENT EXCEPT AS INDICATED.
2. #6 DOWEL x 3'-0" LONG @ 3'-0" OC AT CENTER OF SLAB. EMBED 12" MIN WITH EPOXY ADHESIVE.
3. 4 EQUALLY SPACED ROWS OF #6 DOWEL @ 3'-0" OC EMBED 12" MIN WITH EPOXY ADHESIVE AND STANDARD HOOK.

SECTION

SCALE: 3/8" = 1'-0" S-501 **A4**

GRAPHIC SCALE

1/8" = 1'-0" 0 4' 8' 16' SCALE IN FEET

3/16" = 1'-0" 0 4' 8' 12' SCALE IN FEET

3/8" = 1'-0" 0 2' 4' 6' SCALE IN FEET

SYM	DESCRIPTION	DATE	APPR

STATE OF MISSOURI
DAVID S. CHILTON
NUMBER PE-24461
PROFESSIONAL ENGINEER
3/16/2016

Burns & McDonnell
SINCE 1898

A/E INFO

APPROVED

FOR COMMANDER NAVFAC

ACTIVITY

SATISFACTORY TO DATE

DES DS DRW JRA CHK

PM JOHN A. MOORE, R.A.

BRANCH MANAGER

CHIEF ENG/ARCH

DATE 03/16/2016

DEPARTMENT OF THE NAVY
NAVAL FACILITIES ENGINEERING COMMAND
HAMPTON ROADS IPT
NAVAL FACILITIES ENGINEERING COMMAND ~ MID ATLANTIC
NORFOLK, VIRGINIA
NORFOLK NAVAL SHIPYARD
PORTSMOUTH, VIRGINIA

DEMOLITION OF DRYDOCKS 6 AND 7

BULKHEAD SECTIONS

SCALE: AS NOTED

EPROJECT NO.: 568932

CONSTR. CONTR. NO.

NAVFAC DRAWING NO. 12715731

SHEET 82 OF 90

S-501

DRAWFORM REVISION: 10 MARCH 2009

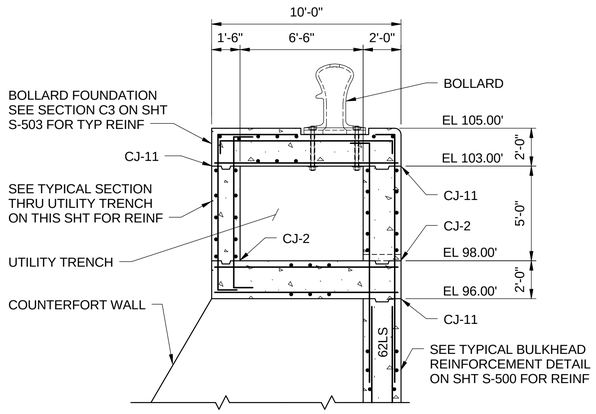

SECTION

SCALE: 1/4" = 1'-0" S-102 **C1**

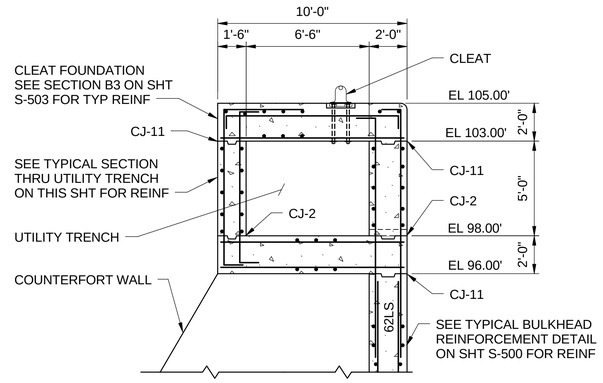

SECTION

SCALE: 1/4" = 1'-0" S-102 **C3**

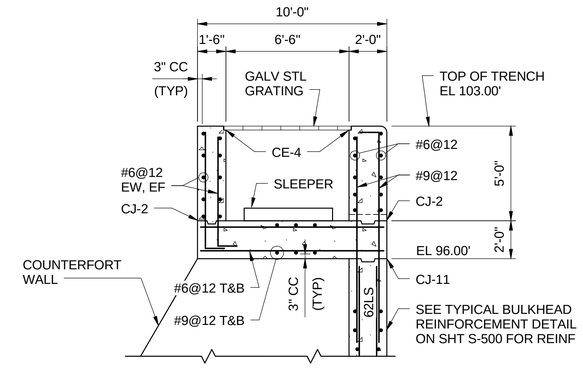

TYPICAL SECTION THRU UTILITY TRENCH

SCALE: 1/4" = 1'-0"

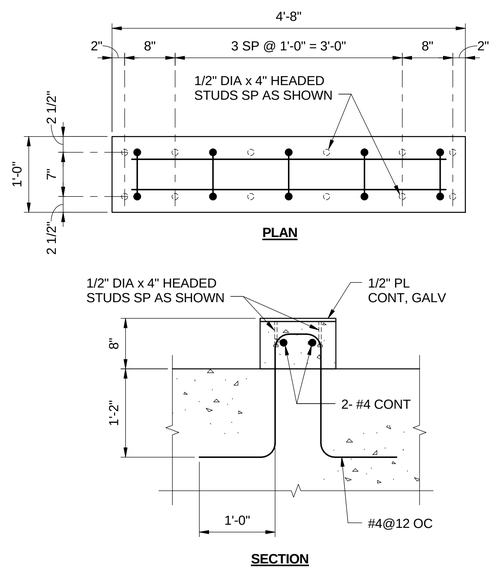

TYPICAL SLEEPER DETAIL

SCALE: 1" = 1'-0"

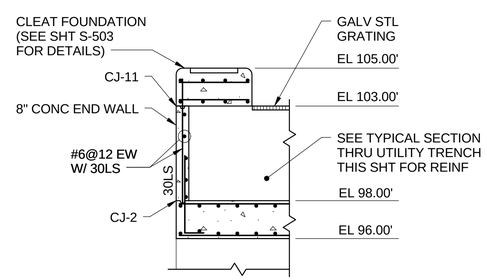

SECTION

(1 THUS, 1 OPP HAND)

SCALE: 1/4" = 1'-0" S-102 **A3**

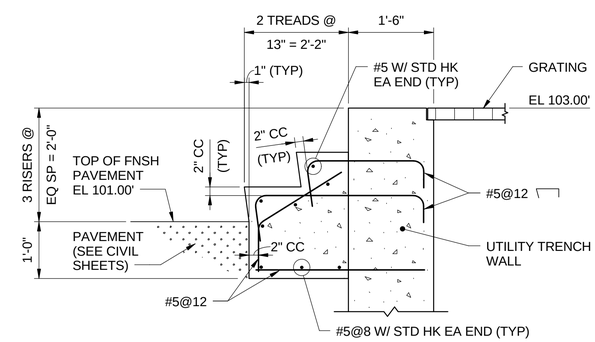

SECTION

SCALE: 3/4" = 1'-0" S-501 **A4**

GRAPHIC SCALE

1" = 1'-0" 0 1/2' 1' 2' SCALE IN FEET

3/4" = 1'-0" 0 1' 2' 3' SCALE IN FEET

1/4" = 1'-0" 0 2' 4' 8' SCALE IN FEET

SYM	DESCRIPTION	DATE	APPR

NAVFAC

STATE OF MISSOURI
DAVID S. CHILTON
NUMBER
PE-24461
PROFESSIONAL ENGINEER
3/9/2016

Burns & McDonnell
SINCE 1898

A/E INFO

APPROVED

FOR COMMANDER NAVFAC

ACTIVITY

SATISFACTORY TO DATE

DES DS DRW JRA CHK

PM JOHN A. MOORE, R.A.

BRANCH MANAGER

CHIEF ENG/ARCH

DATE 03/16/2016

DEPARTMENT OF THE NAVY
NAVAL FACILITIES ENGINEERING COMMAND ~ MID ATLANTIC
HAMPTON ROADS IPT
NAVAL FACILITIES ENGINEERING COMMAND
NORFOLK, VIRGINIA
NORFOLK NAVAL SHIPYARD
PORTSMOUTH, VIRGINIA

DEMOLITION OF DRYDOCKS 6 AND 7

UTILITY TRENCH SECTIONS AND DETAILS

SCALE: AS NOTED

EPROJECT NO.: 568932

CONSTR. CONTR. NO.

NAVFAC DRAWING NO.
12715732

SHEET 83 OF 90

S-502

DRAWFORM REVISION: 10 MARCH 2009

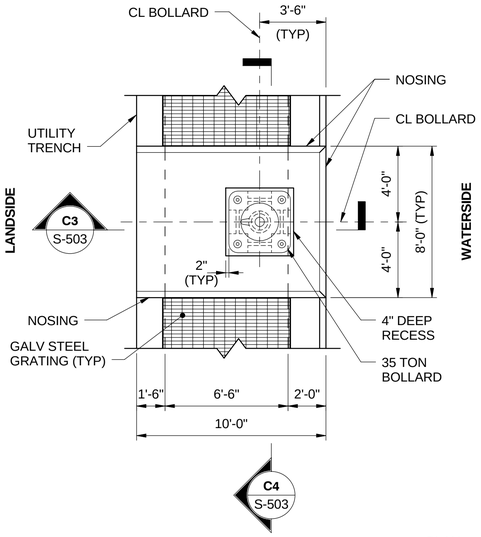

TYPICAL BOLLARD FOUNDATION PLAN

SCALE: 1/4" = 1'-0"

PLAN NORTH

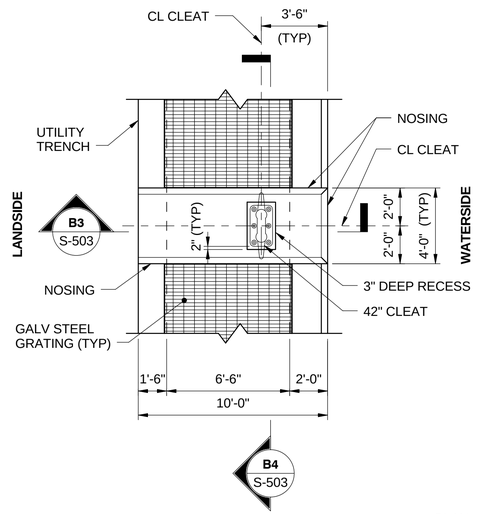

TYPICAL CLEAT FOUNDATION PLAN

SCALE: 1/4" = 1'-0"

PLAN NORTH

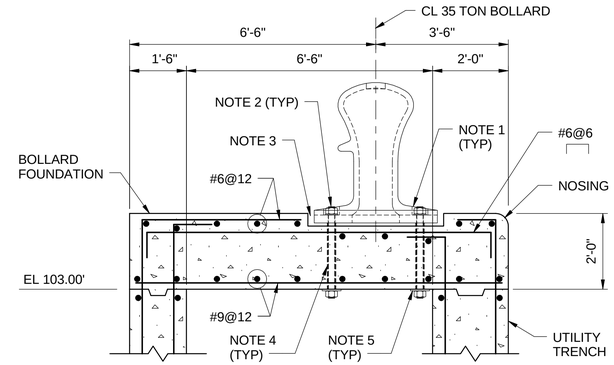

SECTION C3 NOTES:

1. FILL FITTING BOLT POCKETS WITH NON-SHRINK GROUT (TYP ALL FITTINGS).
2. SECURE BOLLARDS WITH 1 3/4" DIA ASTM F1554, GRADE 105 THREADED ROD WITH HEAVY HEX NUTS ASTM A563 GRADE DH AND HARDENED WASHER ASTM F436 (TOP).
3. SHIM FITTINGS 1" AND GROUT SPACE UNDER AND AROUND FITTINGS.
4. 2" ID PVC SLEEVE.
5. PROVIDE 3/4" THICK BY 8" SQUARE PLATE WASHER AT EACH BOLT, OR A SINGLE PLATE 3/4" THICK BY 3'-3" SQUARE AT EACH BOLLARD.
6. ALL BOLLARD HARDWARE SHALL BE GALVANIZED (HOT-DIPPED ZINC COATED) AFTER FABRICATION.

SECTION

SCALE: 1/2" = 1'-0"

S-503 C3

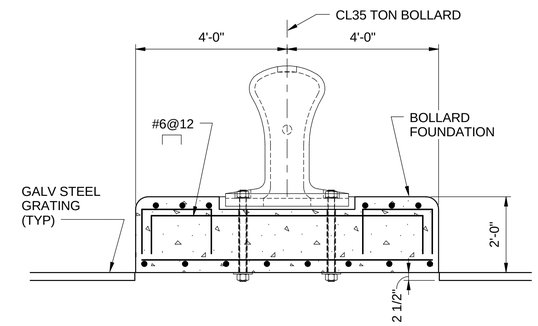

SECTION

SCALE: 1/2" = 1'-0"

S-503 C4

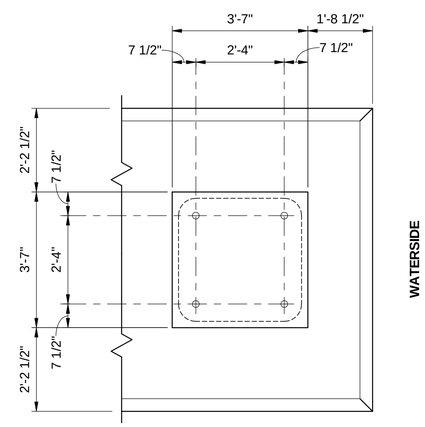

35 TON BOLLARD MOUNTING PLAN

SCALE: 1/2" = 1'-0"

PLAN NORTH

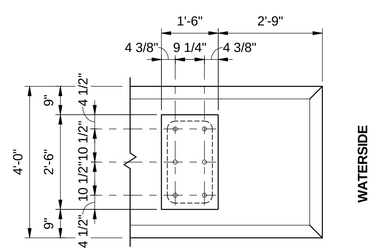

CLEAT MOUNTING PLAN

SCALE: 1/2" = 1'-0"

PLAN NORTH

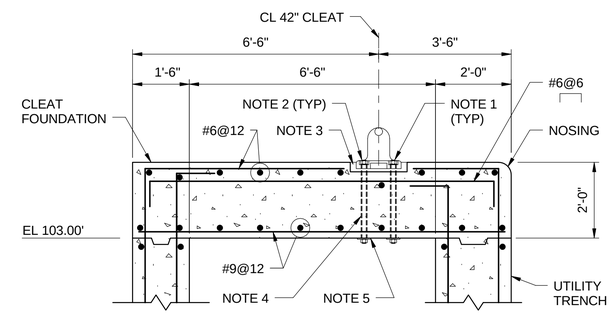

SECTION B3 NOTES:

1. FILL FITTING BOLT POCKETS WITH NON-SHRINK GROUT (TYP ALL FITTINGS).
2. SECURE CLEATS WITH 1 1/8" DIA HEADED ANCHOR BOLTS.
3. SHIM FITTINGS 1" AND GROUT SPACE UNDER AND AROUND FITTINGS.
4. 1 1/2" DIA X-STRONG PIPE SLEEVE (TYP).
5. PROVIDE 3/4" THICK BY 6" SQUARE PLATE WASHER AT EACH BOLT, OR A SINGLE PLATE 3/4" THICK BY 1'-2 1/4" BY 2'-2" AT EACH CLEAT.
6. ALL CLEAT HARDWARE SHALL BE GALVANIZED (HOT-DIPPED ZINC COATED) AFTER FABRICATION.

SECTION

SCALE: 1/2" = 1'-0"

S-503 B3

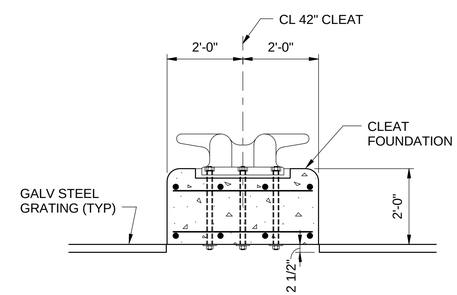

SECTION

SCALE: 1/2" = 1'-0"

S-503 B4

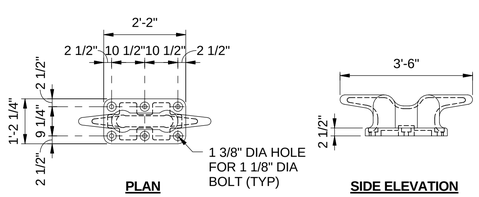

42" CLEAT DETAILS

SCALE: 1/2" = 1'-0"

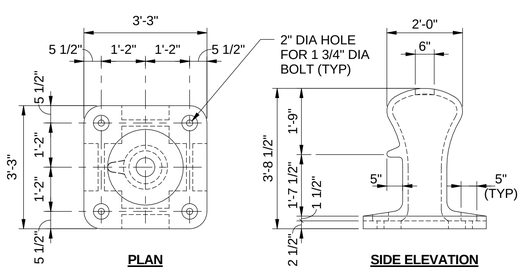

35 TON BOLLARD DETAILS

SCALE: 1/2" = 1'-0"

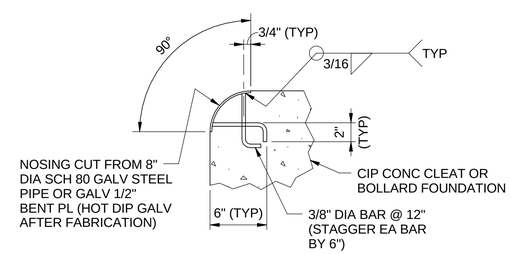

TYPICAL NOSING DETAIL

SCALE: 1 1/2" = 1'-0"

GRAPHIC SCALE

1/4" = 1'-0" — 0, 2', 4', 8' — SCALE IN FEET

1/2" = 1'-0" — 0, 1', 2', 4' — SCALE IN FEET

1 1/2" = 1'-0" — 0, 1/2', 1', 1 1/2' — SCALE IN FEET

SYM	DESCRIPTION	DATE	APPR

NAVFAC

STATE OF MISSOURI — DAVID S. CHILTON — NUMBER E-24461 — PROFESSIONAL ENGINEER — 3/16/2016

Burns & McDonnell — SINCE 1898

A/E INFO

APPROVED

FOR COMMANDER NAVFAC

ACTIVITY

SATISFACTORY TO DATE

DES DS | DRW JRA | CHK

PM JOHN A. MOORE, R.A.

BRANCH MANAGER

CHIEF ENG/ARCH

DATE 03/16/2016

DEPARTMENT OF THE NAVY
NAVAL FACILITIES ENGINEERING COMMAND
NAVAL FACILITIES ENGINEERING COMMAND ~ MID ATLANTIC
NORFOLK, VIRGINIA
HAMPTON ROADS IPT
NORFOLK NAVAL SHIPYARD
PORTSMOUTH, VIRGINIA

DEMOLITION OF DRYDOCKS 6 AND 7

BOLLARD/CLEAT PLANS, SECTIONS, AND DETAILS

SCALE: AS NOTED

EPROJECT NO.: 568932

CONSTR. CONTR. NO.

NAVFAC DRAWING NO. 12715733

SHEET 84 OF 90

S-503

DRAWFORM REVISION: 10 MARCH 2009

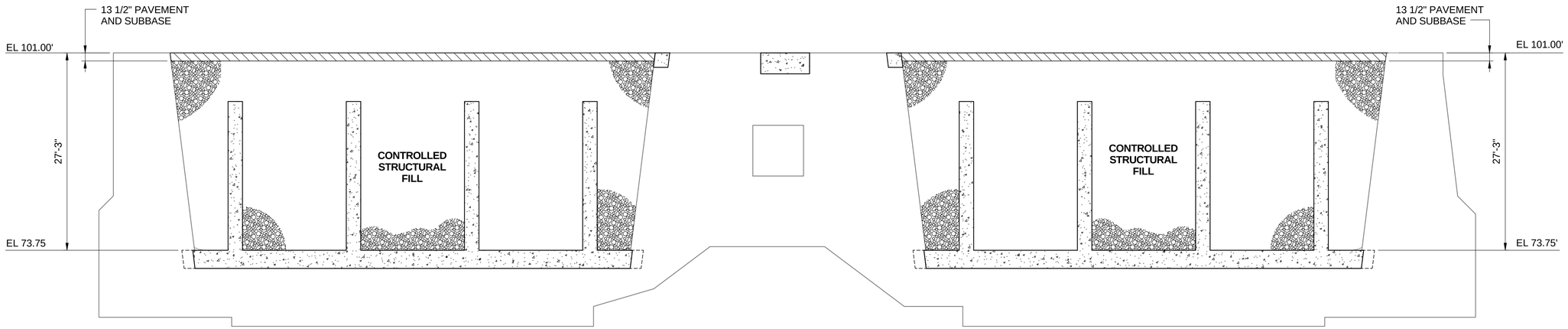

DRY DOCK NO. 7

DRY DOCK NO. 6

SECTION C1

SCALE: 1/8" = 1'-0"

S-102

(LOOKING WEST)

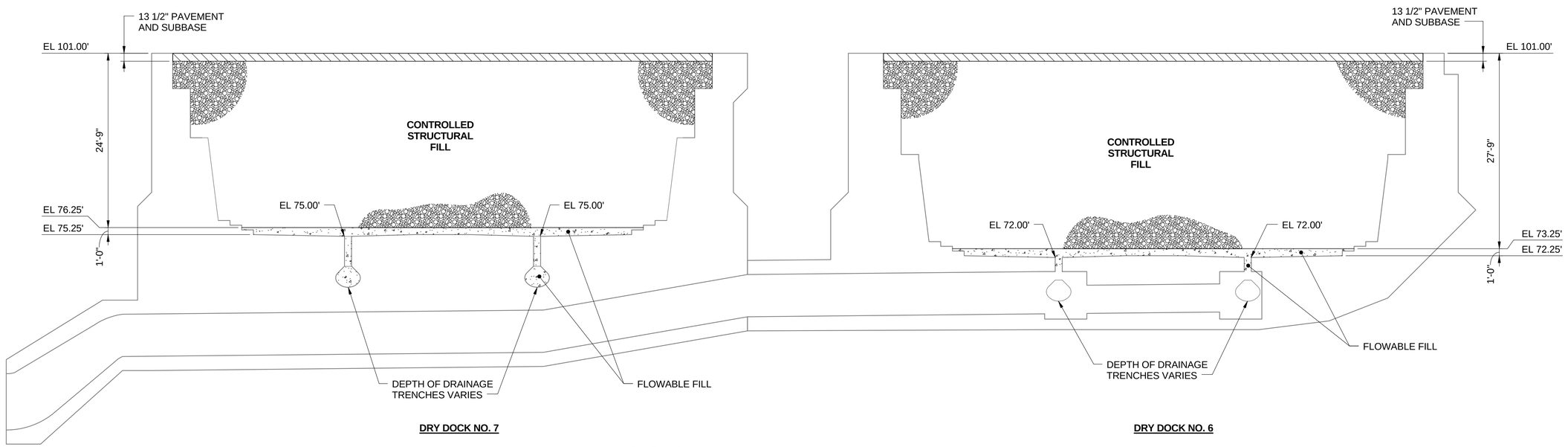

DRY DOCK NO. 7

DRY DOCK NO. 6

SECTION A1

SCALE: 1/8" = 1'-0"

D-601
D-602

(LOOKING WEST)

GRAPHIC SCALE

1/8" = 1'-0"

0 4' 8' 16'

SCALE IN FEET

SYM	DESCRIPTION	DATE	APPR

NAVFAC

STATE OF MISSOURI
DAVID S. CHILTON
NUMBER
PE-24461
PROFESSIONAL ENGINEER
3/16/2016

Burns & McDonnell
SINCE 1898

A/E INFO

APPROVED

FOR COMMANDER NAVFAC

ACTIVITY

SATISFACTORY TO DATE

DES DS DRW JRA CHK

PM JOHN A. MOORE, R.A.

BRANCH MANAGER

CHIEF ENG/ARCH

DATE 03/16/2016

DEPARTMENT OF THE NAVY
NAVAL FACILITIES ENGINEERING COMMAND
HAMPTON ROADS IPT
NORFOLK NAVAL SHIPYARD

NAVAL FACILITIES ENGINEERING COMMAND
NAVFAC — MID ATLANTIC
NORFOLK, VIRGINIA

PORTSMOUTH, VIRGINIA

DEMOLITION OF DRYDOCKS 6 AND 7

DRYDOCK SECTIONS

SCALE: 1/8" = 1'-0"

EPROJECT NO.: 568932

CONSTR. CONTR. NO.

NAVFAC DRAWING NO.
12715734

SHEET 85 OF 90

S-504

DRAWFORM REVISION: 10 MARCH 2009

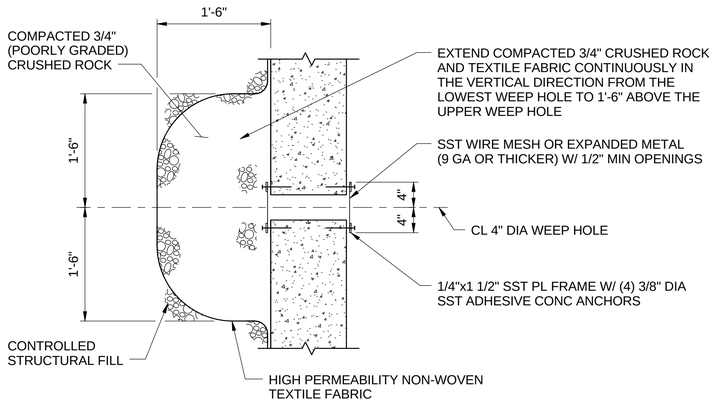

PLAN

WEEP HOLE NOTE:

1. PROVIDE SST MESH ON RIVER AND LAND SIDE OF EACH WEEP HOLE.
2. ALL SST SHALL BE TYPE 316.

WEEP HOLE DETAIL

SCALE: 1" = 1'-0"

GRAPHIC SCALE

1" = 1'-0" 0 1/2' 1' 2'

SCALE IN FEET

SYM	DESCRIPTION	DATE	APPR

NAVFAC

STATE OF MISSOURI
DAVID S. CHILTON
NUMBER PE-21461
PROFESSIONAL ENGINEER
3/16/2016

Burns & McDonnell
SINCE 1898

A/E INFO

APPROVED

FOR COMMANDER NAVFAC

ACTIVITY

SATISFACTORY TO DATE

DES | DRW JRA | CHK

PM JOHN A. MOORE, R.A.

BRANCH MANAGER

CHIEF ENG/ARCH

DATE 03/16/2016

DEPARTMENT OF THE NAVY
NAVAL FACILITIES ENGINEERING COMMAND
HAMPTON ROADS IPT
NAVAL FACILITIES ENGINEERING COMMAND – MID ATLANTIC
NORFOLK, VIRGINIA
NORFOLK NAVAL SHIPYARD
PORTSMOUTH, VIRGINIA
DEMOLITION OF DRYDOCKS 6 AND 7
DRYDOCK SECTIONS AND DETAILS

SCALE: 1" = 1'-0"

EPROJECT NO.: 568932

CONSTR. CONTR. NO.

NAVFAC DRAWING NO. 12715735

SHEET 86 OF 90

S-505

DRAWFORM REVISION: 10 MARCH 2009