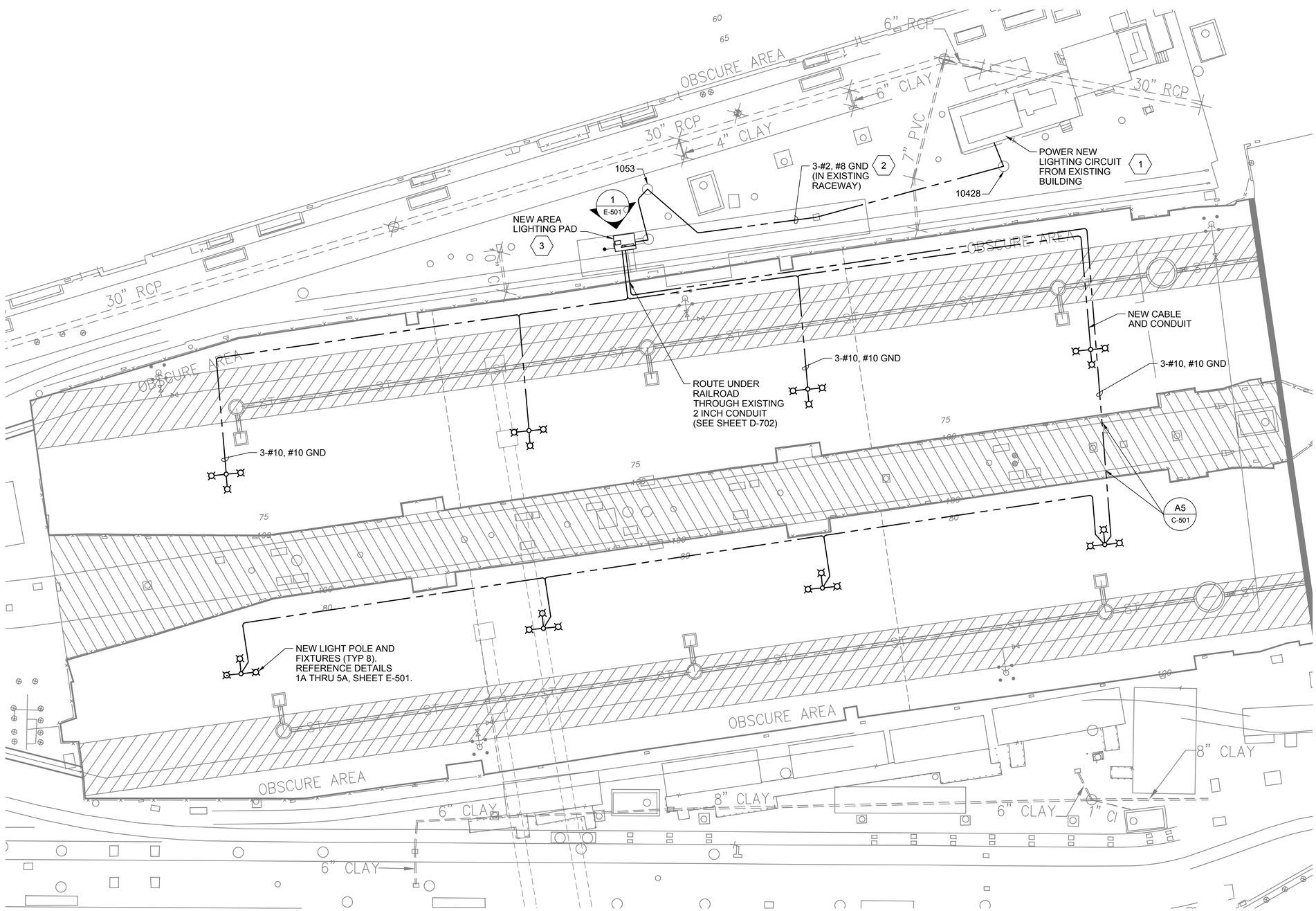

DRYDOCKS 6 AND 7 AREA LIGHTING SITE PLAN

SCALE: 1" = 20'-0"

SHEET NOTES

1. REFER TO CIVIL DRAWING FOR PENETRATION OF CONDUIT THROUGH EXISTING DRY DOCK WALLS AND CRANE RAILS.
2. ALL EQUIPMENT & UNDERGROUND CONDUIT LOCATIONS SHOWN ARE APPROXIMATE. CONTRACTOR SHALL FIELD VERIFY ALL CONDITIONS PRIOR TO BEGINNING CONSTRUCTION. ALL EQUIPMENT SHALL BE INSTALLED IN ACCORDANCE WITH MANUFACTURER'S RECOMMENDATIONS.
3. ALL OUTAGES SHALL BE PERFORMED IN ACCORDANCE WITH APPROVED OUTAGE PLAN.
4. ALL EQUIPMENT NEW/MODIFIED THROUGH THIS CONTRACT SHALL BE LABELED/RELABELED AS NOTED. ALL DEVICE LABELS SHALL BE WHITE PLASTIC WITH BLACK ENGRAVED LETTERING ATTACHED TO EQUIPMENT.

KEYED NOTES (X)

(1) OPEN 100AMP, 480V, CIRCUIT BREAKER (CURRENTLY LABELED "15HP PUMP CONTROL PANEL - NORTH SIDE OF DRY-DOCK 6") IN SUBSTATION P1-E AND DISCONNECT EXISTING CONDUCTORS AND REMOVE. PLACE A NEW NAMEPLATE LABEL ON BREAKER COVER AND LABEL AS "AREA LIGHTING RACK."

(2) REMOVE EXISTING CONDUCTORS TO 15HP PUMP CONTROL PANEL FROM ELECTRICAL DUCTBANK, STARTING AT SUBSTATION P1-E, TO MANHOLE 1042B, TO MANHOLE 1053, TO TURTLE BACK TB-DD6-1. REPLACE WITH NEW CIRCUIT OF 3-#2, #8 GND TO DISCONNECT ON NEW AREA LIGHTING RACK AS SHOWN USING EXISTING DUCT BANK AND CONDUIT.

(3) SAWCUT EXISTING PAVEMENT AND INSTALL NEW CONCRETE PAD AND RACK. THE RACK SHALL HAVE A 480V-480Y/277V 30kVA MARINE-DUTY TRANSFORMER, AREA LIGHTING ENCLOSURE AND 60A DISCONNECT. LABEL DISCONNECT "FED FROM CIRCUIT BREAKER IN SUBSTATION P1-E." SEE ONE-LINE DIAGRAM AND RACK ELEVATION ON SHEET E-501.

GRAPHIC SCALE

1" = 20'-0"

0 10' 20' 40'
SCALE IN FEET

SYM	DESCRIPTION	DATE	APPR

NAVFAC

STATE OF MISSOURI
CRAIG MICHAEL KOENIG
NUMBER E-24527
PROFESSIONAL ENGINEER
3/17/2016

Burns & McDonnell
SINCE 1898

A/E INFO

APPROVED
FOR COMMANDER NAVFAC
ACTIVITY D.W. HARRIS 3/22/16
SATISFACTORY TO DATE
DES CMK DRW RGB CHK JWS
PM John A. Moore, R.A.
BRANCH MANAGER RRB
CHIEF ENG/ARCH
DATE 03/16/2016

DEPARTMENT OF THE NAVY
NAVAL FACILITIES ENGINEERING COMMAND
HAMPTON ROADS IPT
NORFOLK NAVAL SHIPYARD

NAVAL FACILITIES ENGINEERING COMMAND ~ MID ATLANTIC
NORFOLK, VIRGINIA
PORTSMOUTH, VIRGINIA

DEMOLITION OF DRYDOCKS 6 AND 7

DRYDOCKS SITE LIGHTING PLAN

SCALE: AS NOTED
EPROJECT NO.: 568932
CONSTR. CONTR. NO.
NAVFAC DRAWING NO. 12715736
SHEET 89 OF 90

E-101

DRAWFORM REVISION: 10 MARCH 2009

FILE NAME: J:\NNSY\CIF\54018_CIF Final Design Contract\04_CADD\NNSY\CIF Controlled Industrial Facility\Sheets\Electrical\P383\DRYD-568932-E-101.dwg LAYOUT NAME: P383DRYD-568932-

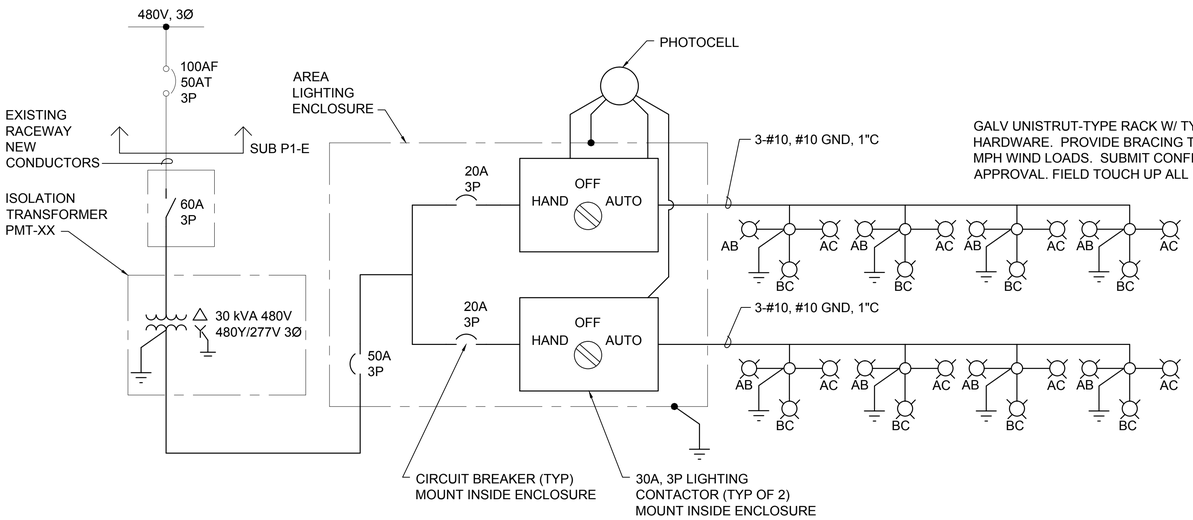

DRY DOCKS ONE-LINE DIAGRAM

NOT TO SCALE

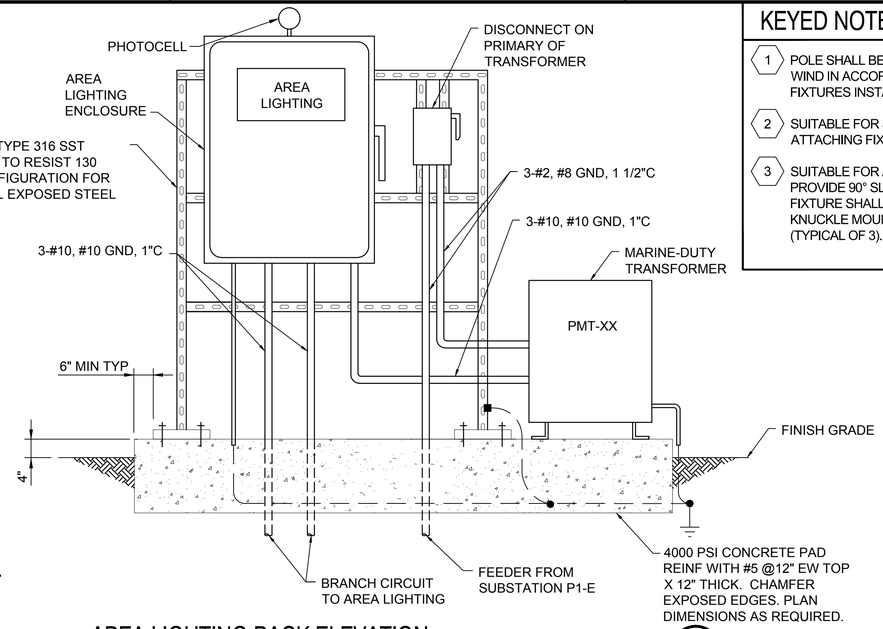

AREA LIGHTING RACK ELEVATION

NOT TO SCALE — E-101 (1)

KEYED NOTES (X)

1. POLE SHALL BE DESIGNED FOR 105 MPH WIND IN ACCORDANCE WITH ASCE-7 WITH FIXTURES INSTALLED.
2. SUITABLE FOR SLIPFITTER BRACKETS FOR ATTACHING FIXTURE TYPE (TYPICAL OF 3).
3. SUITABLE FOR ATTACHING FIXTURE TYPE PROVIDE 90° SLIPFITTER AS SHOWN. FIXTURE SHALL BE FURNISHED WITH 2" KNUCKLE MOUNTING FITTER (U.L. LISTED) (TYPICAL OF 3).

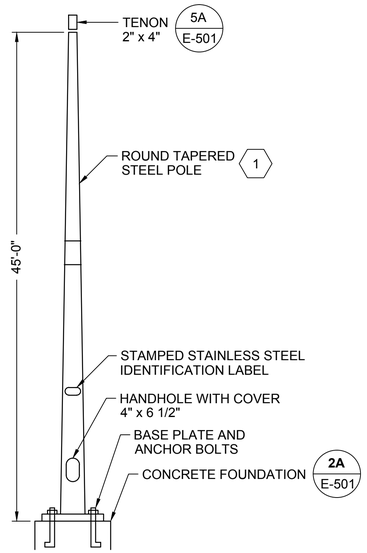

HIGH MAST POLE DETAIL

NOT TO SCALE — E-501 (1A)

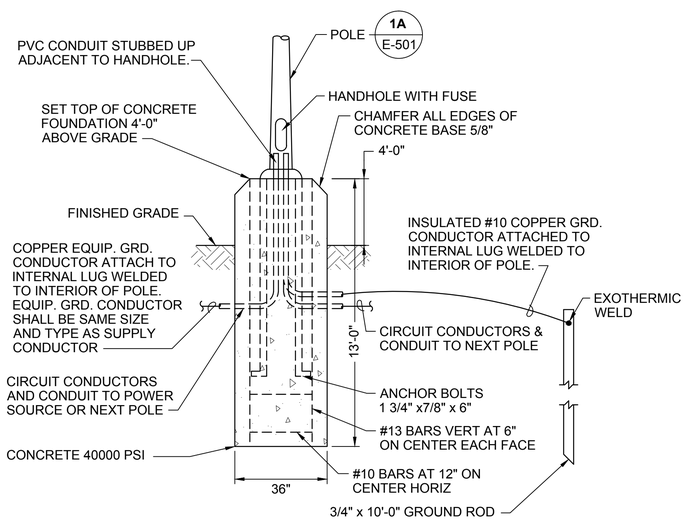

HIGH MAST POLE FOUNDATION DETAIL

NOT TO SCALE — E-501 (2A)

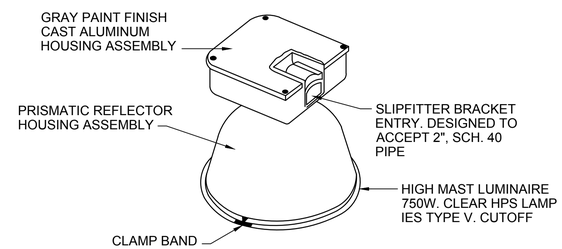

U.L. LISTED FOR OUTDOOR WET LOCATIONS.
ALL HARDWARE SHALL BE STAINLESS STEEL

REFLECTOR STYLE	MAX HEIGHT	MAX WIDTH
CUTOFF	22"	25 1/4"

FIXTURE DETAIL

NOT TO SCALE — E-501 (4A)

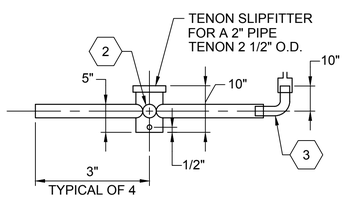

POLE FITTER BRACKET ARM MOUNTING

NOT TO SCALE — E-501 (3A)

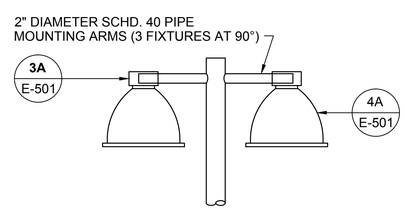

FIXTURE MOUNTING DETAIL

NOT TO SCALE — E-501 (5A)

SYM	DESCRIPTION	DATE	APPR

NAVFAC

STATE OF MISSOURI — CRAIG MICHAEL KOENIG — NUMBER E-24527 — PROFESSIONAL ENGINEER — 3/17/2016

Burns & McDonnell — SINCE 1898

A/E INFO

APPROVED

FOR COMMANDER NAVFAC

ACTIVITY

SATISFACTORY TO DATE

DES CMK DRW RGB CHK JWS

PM John A. Moore, R.A.

BRANCH MANAGER RRB

CHIEF ENG/ARCH

DATE 03/16/2016

DEPARTMENT OF THE NAVY
NAVAL FACILITIES ENGINEERING COMMAND ~ MID ATLANTIC
NAVAL FACILITIES ENGINEERING COMMAND
NORFOLK, VIRGINIA
HAMPTON ROADS IPT
NORFOLK NAVAL SHIPYARD
PORTSMOUTH, VIRGINIA

DEMOLITION OF DRYDOCKS 6 AND 7

DRYDOCKS SITE LIGHTING DETAILS

SCALE: AS NOTED

EPROJECT NO.: 568932

CONSTR. CONTR. NO.

NAVFAC DRAWING NO. 12715737

SHEET 90 OF 90

E-501

DRAWFORM REVISION: 10 MARCH 2009

FILE NAME: J:\NNSY\CIF\54018_CIF Final Design Contract\04_CADD\NNSY\CIF Controlled Industrial Facility\Sheets\Electrical\P3830RYD-568932-E-501.dwg LAYOUT NAME: E-102 DRY DOCK LIGHTING DETAILS PLOTTED: Wednesday, March 16, 2016 - 10:59am USER: janaya