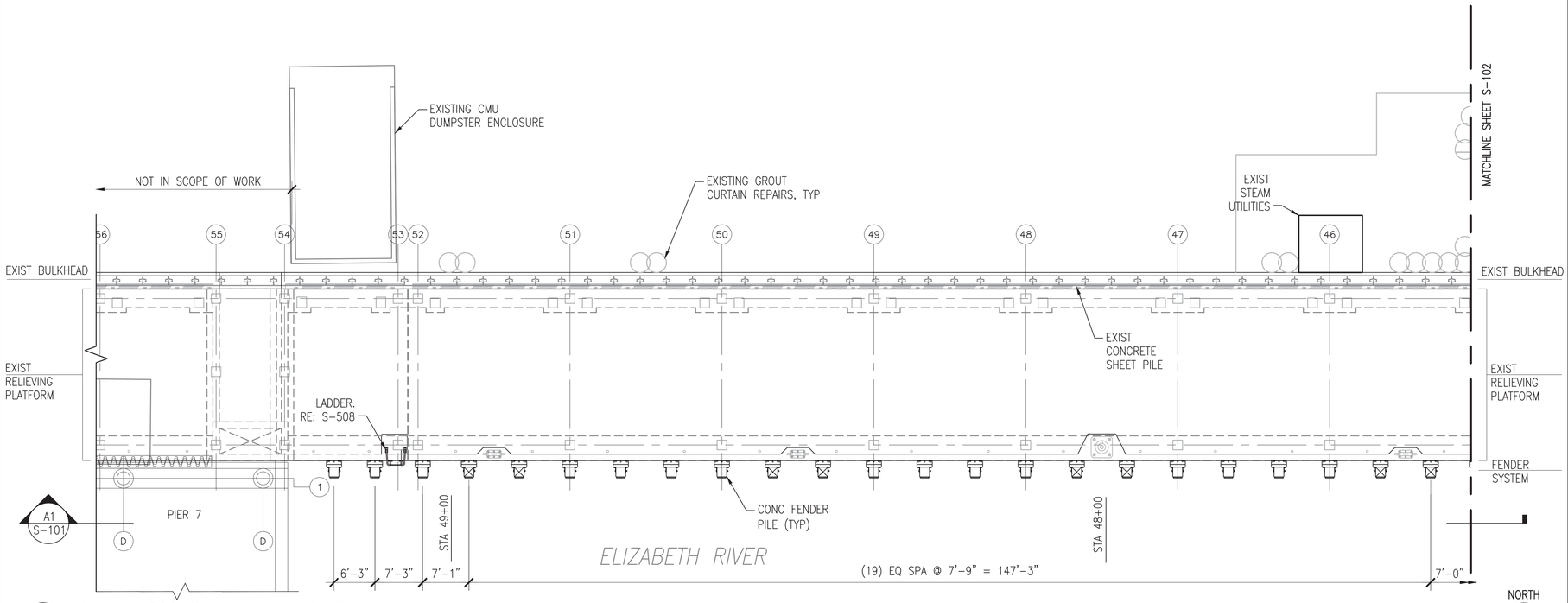

C1 PLAN - Z-308 BULKHEAD (1 OF 7)

SCALE: 1" = 10'

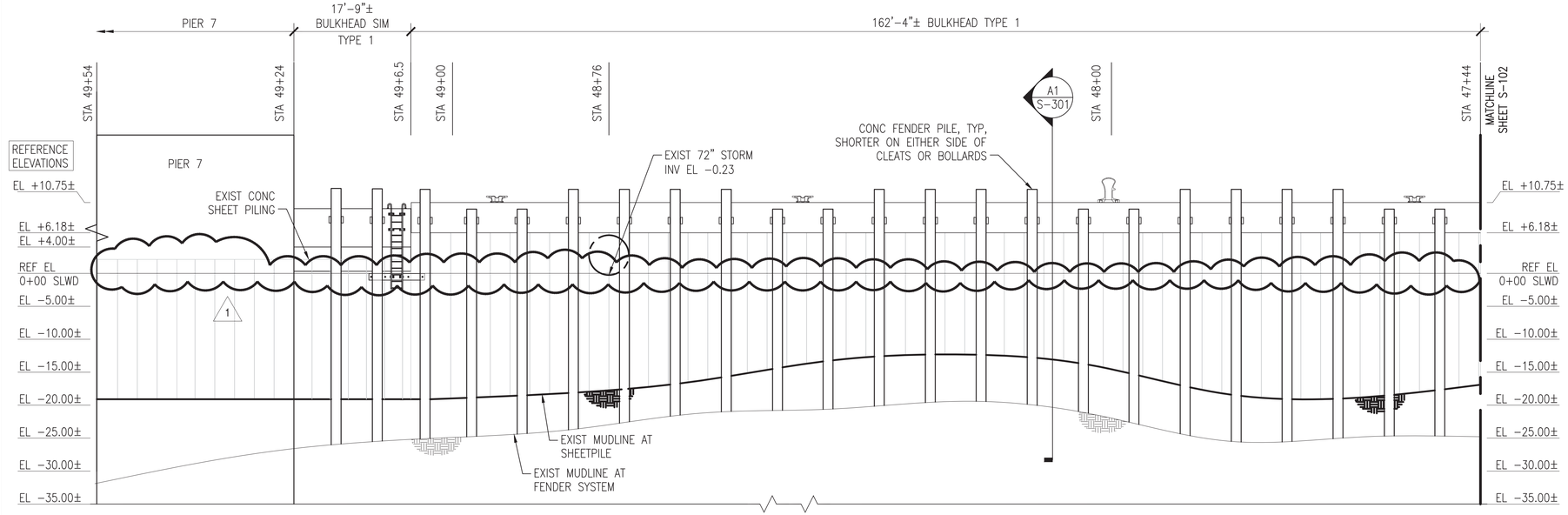

A1 ELEVATION AT FENDER SYSTEM

SCALE: 1" = 10'

S-101

GENERAL SHEET NOTES @ Z-308

1. PROVIDE Z-308 BULKHEAD FENDER SYSTEM COMPLETE, TO INCLUDE, BUT NOT LIMITED TO, PRESTRESSED CONCRETE PILES, WELDMENTS, RUBBER COMPONENTS, AND SPACERS.
2. PROVIDE JET-GROUTED SOIL CURTAIN WALL REPAIRS BEHIND THE BULKHEAD AS SHOWN ON THE PLANS.
3. PROVIDE NEW LADDER(S) AND CLEAT(S) AS IDENTIFIED ON THE DRAWINGS.
4. MUDLINE INFORMATION IS BASED UPON NAVFAC HYDROLOGICAL SURVEY DATA FROM JANUARY 2015 AND IS PROVIDED FOR REFERENCE ONLY.
5. ELEVATIONS SHOWN ON THE SD SERIES DRAWINGS ARE NOTED AS REFERENCE ELEVATIONS, AND CORRESPOND TO THE PROVIDED AS-BUILT DRAWINGS FOR THE BULKHEAD, WITH THE TOP OF CURBING ELEVATION AT +11.0 FEET ABOVE MLW. THE CONTRACTOR SHALL SET UP TEMPORARY BENCHMARKS AND COORDINATE REAL TIME ELEVATIONS WITH THE CIVIL DRAWINGS AND DATUM PROVIDED ON G-002.
6. FOR CONCRETE FENDER PILES, REFER TO SHEET S-505.
7. FOR COMPOSITE FENDER PILES, REFER TO SHEET S-506

TABULATED NEW WORK QUANTITIES (THIS SHEET)

SYMBOL	ITEM	QUANTITY	UNIT
OR	CONCRETE FENDER PILE	23	EA
	COMPOSITE FENDER PILE	–	EA
	42" CLEAT	–	EA
	24" CLEAT	–	EA
	LADDER	1	EA
	TIMBER WALE WITH BLOCKING	–	LF
	TIMBER CHOCK WITH SPACERS	–	LF
(-·-·-·-)	GROUT CURTAIN	–	LF
	CHAIN / POSTS	–	LF/EA

NOTE: ALL NEW WORK DIMENSIONS ARE APPROXIMATE AND REPRESENT THE OVERALL EXTENT OF WORK REQUIRED AT THAT LOCATION. REFER TO TYPICAL SECTIONS/DETAILS AND REFERENCE DRAWINGS FOR ADDITIONAL INFORMATION.

KEY PLAN

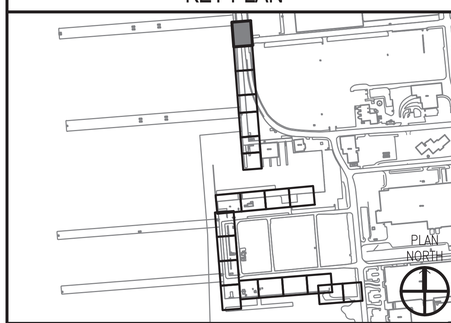

GRAPHIC SCALE

1"=10' 0' 10' 20'

SYM	DESCRIPTION	DATE	APPR.
	REMOVE WATER LEVEL WARNINGS	8/12/2016	KAD

SEAL

A/E INFO.

APPROVED FOR COMMANDER NAVFAC 8-11-16

ACTIVITY: DAVE SEARS

SATISFACTORY TO DATE 6/17/2016

DES ELT DRW KAD CHK CLT

DESIGN MANAGER EDDY THEISZ

BRANCH MANAGER CAT

CHIEF ENGINEER J. HASTE, P.E.

FIRE PROTECTION

DEPARTMENT OF THE NAVY
NAVAL FACILITIES ENGINEERING COMMAND
HAMPTON ROADS IPT - PWD NORFOLK

NAVAL FACILITIES ENGINEERING COMMAND-MID-ATLANTIC
NORFOLK NAVAL STATION
NORFOLK NAVAL STATION, NORFOLK, VIRGINIA

CEP-175 AND Z-308 BULKHEAD REPAIR

STRUCTURAL PLAN & ELEV (1 OF 21)

SCALE: AS NOTED

EPROJECT NO. 1370817

CONSTR. CONTR. NO. N/A

NAVFAC DRAWING NO. 12,729,744

SHEET 89 OF 158

S-101

DRAWFORM REVISION: 10 MARCH 2009

FILE NAME: P:\VA\NavalStationNorfolk\Waterfront\Bulkheads\2015_1370817_CEP-1762-308Repair\B_Design\Drawings\Sheet\07_Structural\1370817_S-100 SERIES.dwg LAYOUT NAME: S-101 STRUCTURAL PLAN & ELEV (1 OF 21) PLOTTED: Wednesday, August 10, 2016 - 11:43am USER: christine.kulkowski

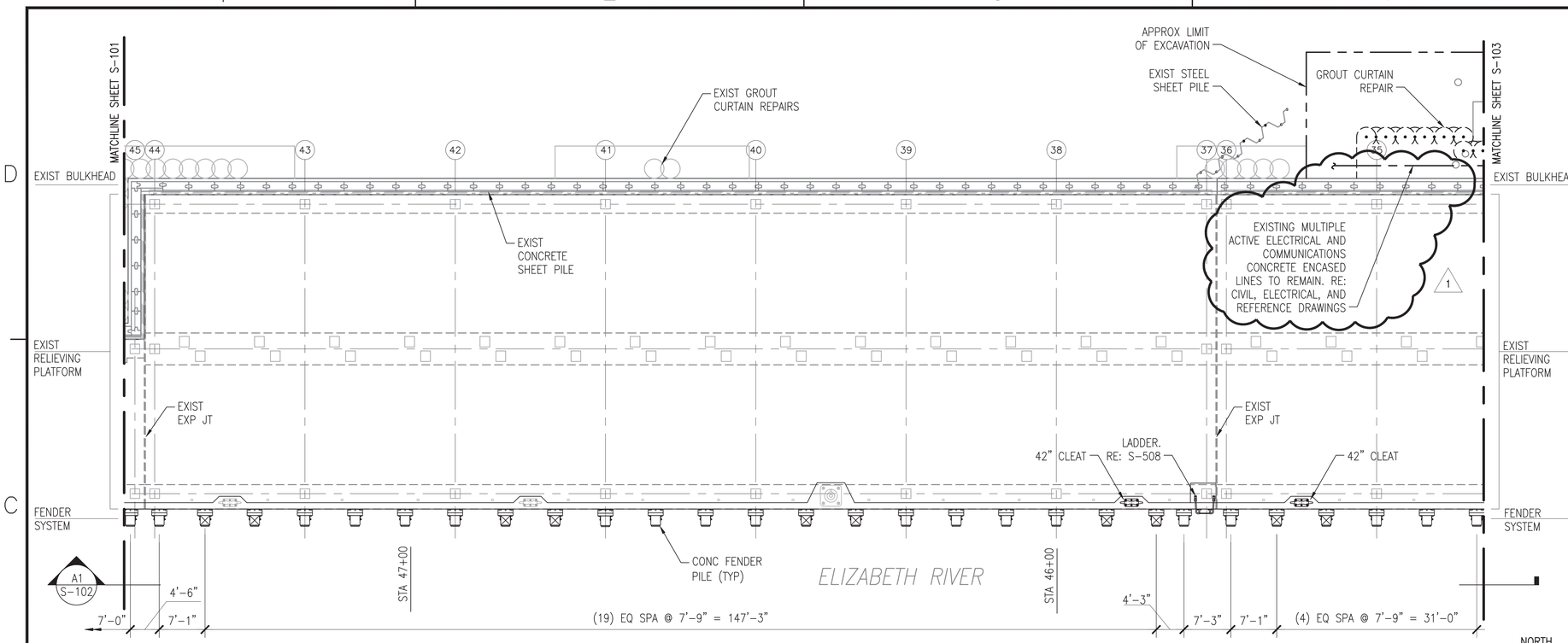

C1 PLAN - Z-308 BULKHEAD (2 OF 7)

SCALE: 1" = 10'

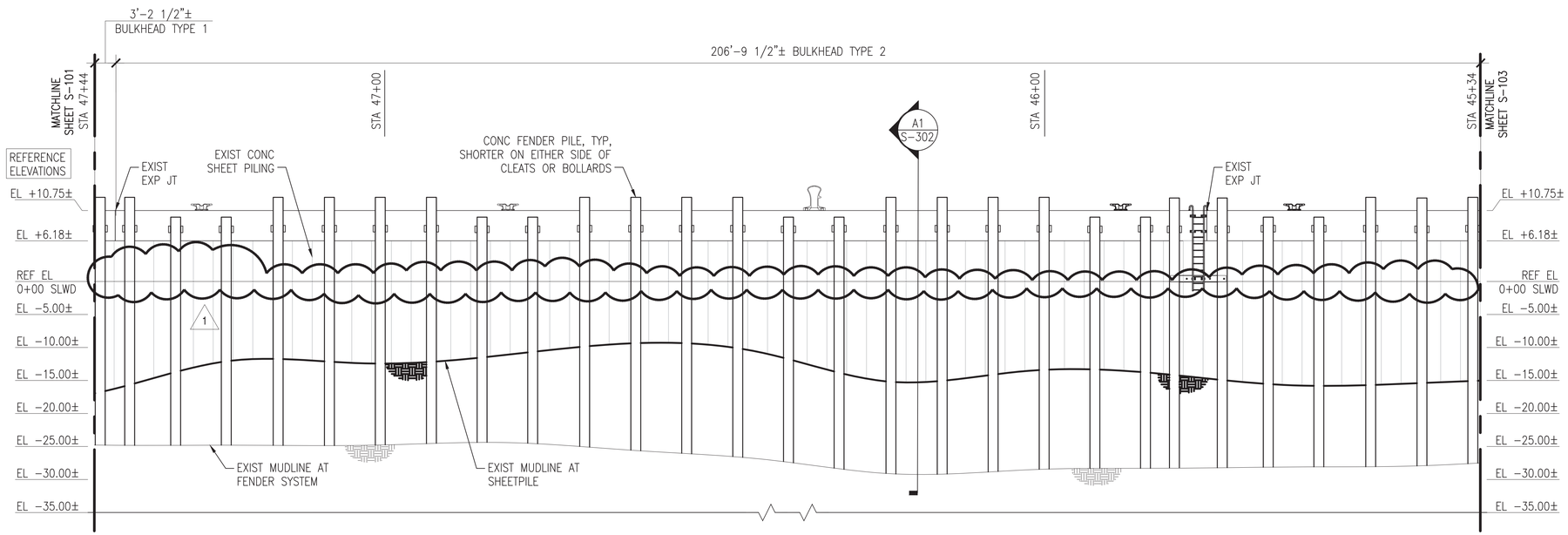

A1 ELEVATION AT FENDER SYSTEM

SCALE: 1" = 10'

S-102

GENERAL SHEET NOTES @ Z-308

1. PROVIDE Z-308 BULKHEAD FENDER SYSTEM COMPLETE, TO INCLUDE, BUT NOT LIMITED TO, PRESTRESSED CONCRETE PILES, WELDMENTS, RUBBER COMPONENTS, AND SPACERS.
2. PROVIDE JET-GROUTED SOIL CURTAIN WALL REPAIRS BEHIND THE BULKHEAD AS SHOWN ON THE PLANS.
3. PROVIDE NEW LADDER(S) AND CLEAT(S) AS IDENTIFIED ON THE DRAWINGS.
4. MUDLINE INFORMATION IS BASED UPON NAVFAC HYDROLOGICAL SURVEY DATA FROM JANUARY 2015 AND IS PROVIDED FOR REFERENCE ONLY.
5. ELEVATIONS SHOWN ON THE SD SERIES DRAWINGS ARE NOTED AS REFERENCE ELEVATIONS, AND CORRESPOND TO THE PROVIDED AS-BUILT DRAWINGS FOR THE BULKHEAD, WITH THE TOP OF CURBING ELEVATION AT +11.0 FEET ABOVE MLW. THE CONTRACTOR SHALL SET UP TEMPORARY BENCHMARKS AND COORDINATE REAL TIME ELEVATIONS WITH THE CIVIL DRAWINGS AND DATUM PROVIDED ON G-002.
6. FOR CONCRETE FENDER PILES, REFER TO SHEET S-505.
7. FOR COMPOSITE FENDER PILES, REFER TO SHEET S-506

TABULATED NEW WORK QUANTITIES (THIS SHEET)

SYMBOL	ITEM	QUANTITY	UNIT
OR	CONCRETE FENDER PILE	29	EA
	COMPOSITE FENDER PILE	–	EA
	42" CLEAT	2	EA
	24" CLEAT	–	EA
	LADDER	1	EA
	TIMBER WALE WITH BLOCKING	–	LF
	TIMBER CHOCK WITH SPACERS	–	LF
(·Y·Y·)	GROUT CURTAIN	23	LF
	CHAIN / POSTS	–	LF/EA

NOTE: ALL NEW WORK DIMENSIONS ARE APPROXIMATE AND REPRESENT THE OVERALL EXTENT OF WORK REQUIRED AT THAT LOCATION. REFER TO TYPICAL SECTIONS/DETAILS AND REFERENCE DRAWINGS FOR ADDITIONAL INFORMATION.

KEY PLAN

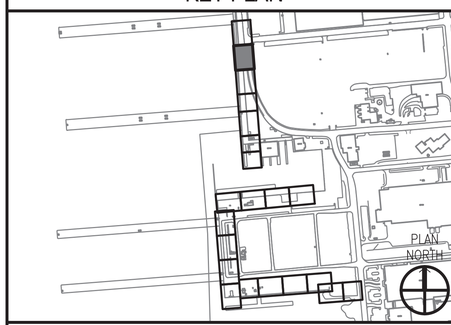

GRAPHIC SCALE

1"=10' 0' 10' 20'

SYM	DESCRIPTION	DATE	APPR.
1	WATER LEVEL WARNINGS & ELEC DUCT CLARIFICATION	8/12/2016	KAD

NAVFAC

SEAL

A/E INFO.

APPROVED

FOR COMMANDER NAVFAC 8-11-16

ACTIVITY

DAVE SEARS

SATISFACTORY TO DATE 6/17/2016

DES ELT DRW KAD CHK CLT

DESIGN MANAGER EDDY THEISZ

BRANCH MANAGER CAT

CHIEF ENGINEER J. HASTE, P.E.

FIRE PROTECTION

DEPARTMENT OF THE NAVY
NAVAL FACILITIES ENGINEERING COMMAND
HAMPTON ROADS IPT - PWD NORFOLK

NAVAL FACILITIES ENGINEERING COMMAND-MID-ATLANTIC
NORFOLK NAVAL STATION
NORFOLK NAVAL STATION, NORFOLK, VIRGINIA

CEP-175 AND Z-308 BULKHEAD REPAIR

STRUCTURAL PLAN & ELEV (2 OF 21)

SCALE: AS NOTED

EPROJECT NO. 1370817

CONSTR. CONTR. NO. N/A

NAVFAC DRAWING NO. 12,729,745

SHEET 90 OF 158

S-102

DRAWFORM REVISION: 10 MARCH 2009

FILE NAME: P:\VA\NorfolkStationNorfolk\Waterfront\Bulkheads\2015_1370817_CEP-1752-308Repair\B_Design\Drawings\Sheet\07_Structural\1370817_S-100 SERIES.dwg LAYOUT NAME: S-102 STRUCTURAL PLAN & ELEV (2 OF 21) PLOTTED: Wednesday, August 10, 2016 - 11:43am USER: christine.rutkowski

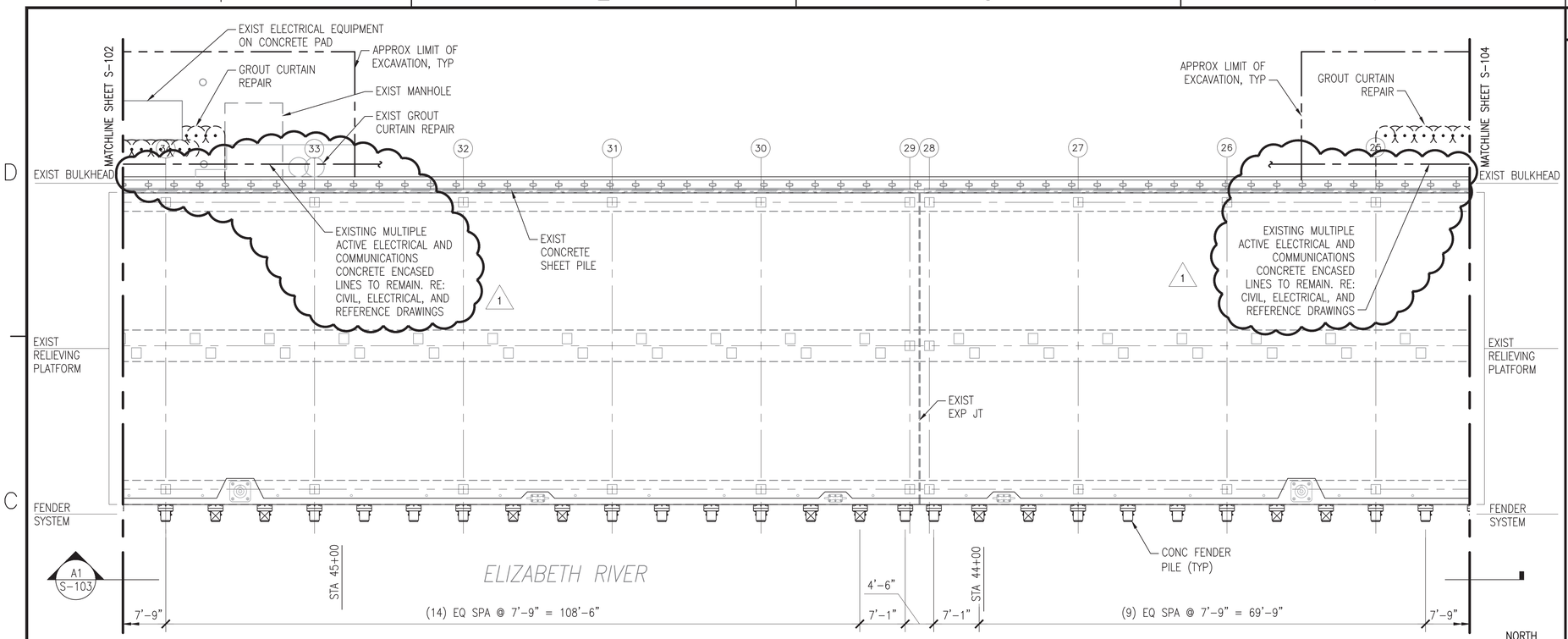

C1 PLAN - Z-308 BULKHEAD (3 OF 7)
SCALE: 1" = 10'

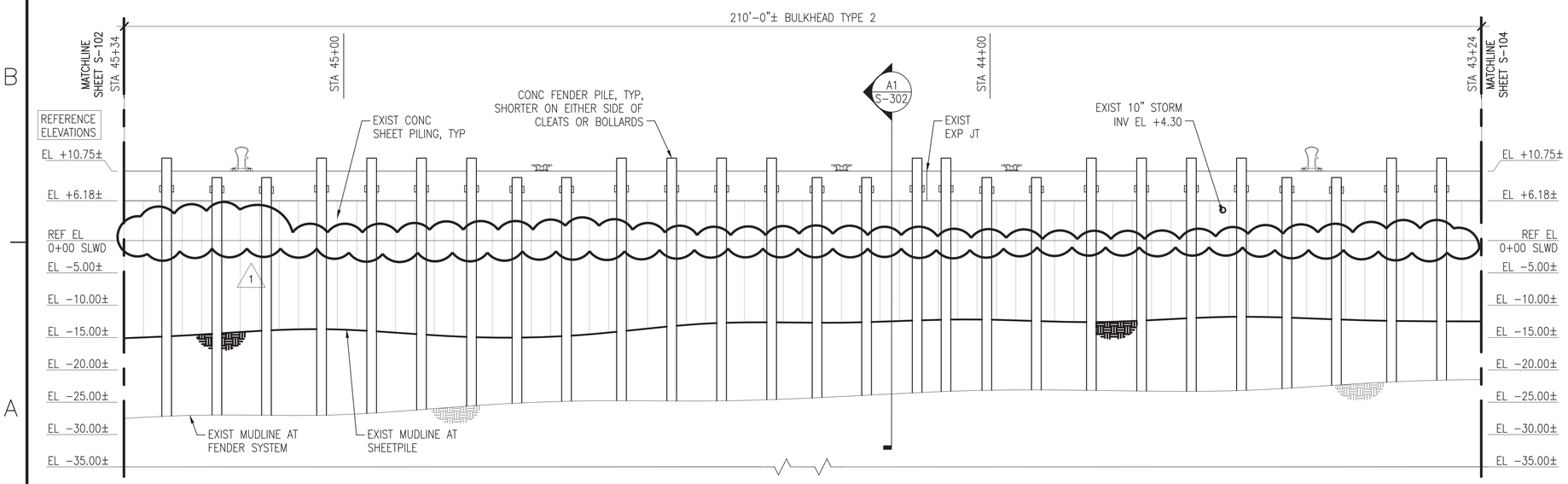

A1 ELEVATION AT FENDER SYSTEM
SCALE: 1" = 10'

S-103

GENERAL SHEET NOTES @ Z-308

1. PROVIDE Z-308 BULKHEAD FENDER SYSTEM COMPLETE, TO INCLUDE, BUT NOT LIMITED TO, PRESTRESSED CONCRETE PILES, WELDMENTS, RUBBER COMPONENTS, AND SPACERS.
2. PROVIDE JET-GROUTED SOIL CURTAIN WALL REPAIRS BEHIND THE BULKHEAD AS SHOWN ON THE PLANS.
3. PROVIDE NEW LADDER(S) AND CLEAT(S) AS IDENTIFIED ON THE DRAWINGS.
4. MUDLINE INFORMATION IS BASED UPON NAVFAC HYDROLOGICAL SURVEY DATA FROM JANUARY 2015 AND IS PROVIDED FOR REFERENCE ONLY.
5. ELEVATIONS SHOWN ON THE SD SERIES DRAWINGS ARE NOTED AS REFERENCE ELEVATIONS, AND CORRESPOND TO THE PROVIDED AS-BUILT DRAWINGS FOR THE BULKHEAD, WITH THE TOP OF CURBING ELEVATION AT +11.0 FEET ABOVE MLW. THE CONTRACTOR SHALL SET UP TEMPORARY BENCHMARKS AND COORDINATE REAL TIME ELEVATIONS WITH THE CIVIL DRAWINGS AND DATUM PROVIDED ON G-002.
6. FOR CONCRETE FENDER PILES, REFER TO SHEET S-505.
7. FOR COMPOSITE FENDER PILES, REFER TO SHEET S-506

TABULATED NEW WORK QUANTITIES (THIS SHEET)

SYMBOL	ITEM	QUANTITY	UNIT
OR	CONCRETE FENDER PILE	27	EA
	COMPOSITE FENDER PILE	–	EA
	42" CLEAT	–	EA
	24" CLEAT	–	EA
	LADDER	–	EA
	TIMBER WALE WITH BLOCKING	–	LF
	TIMBER CHOCK WITH SPACERS	–	LF
	GROUT CURTAIN	36	LF
	CHAIN / POSTS	–	LF/EA

NOTE: ALL NEW WORK DIMENSIONS ARE APPROXIMATE AND REPRESENT THE OVERALL EXTENT OF WORK REQUIRED AT THAT LOCATION. REFER TO TYPICAL SECTIONS/DETAILS AND REFERENCE DRAWINGS FOR ADDITIONAL INFORMATION.

KEY PLAN

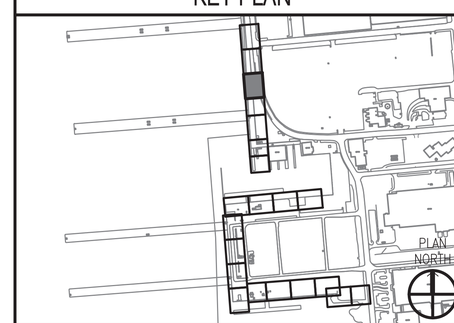

GRAPHIC SCALE

1"=10' 0' 10' 20'

SYM	DESCRIPTION	DATE	APPR.
1	WATER LEVEL MARKINGS & ELEC. DUCT CLARIFICATION	8/12/2016	KAD

NAVFAC

SEAL

A/E INFO.

APPROVED
FOR COMMANDER NAVFAC 8-11-16

ACTIVITY
DAVE SEARS

SATISFACTORY TO DATE 6/17/2016
DES ELT DRW KAD CHK CLT
DESIGN MANAGER EDDY THEISZ
BRANCH MANAGER CAT
CHIEF ENGINEER J. HASTE, P.E.
FIRE PROTECTION

DEPARTMENT OF THE NAVY
NAVAL FACILITIES ENGINEERING COMMAND
HAMPTON ROADS IPT - PWD NORFOLK

NAVAL FACILITIES ENGINEERING COMMAND-MID-ATLANTIC
NORFOLK NAVAL STATION
NORFOLK, VIRGINIA

CEP-175 AND Z-308 BULKHEAD REPAIR

STRUCTURAL PLAN & ELEV (3 OF 21)

SCALE: AS NOTED
EPROJECT NO. 1370817
CONSTR. CONTR. NO. N/A
NAVFAC DRAWING NO. 12,729,746
SHEET 91 OF 158

S-103

DRAWFORM REVISION: 10 MARCH 2009

FILE NAME: P:\VA\NavalStationNorfolk\Waterfront\Bulkheads\2015_1370817_CEP-1762-308Repair\B_Design\Drawings\Sheet\07_Structural\1370817_S-100 SERIES.dwg LAYOUT NAME: S-103 STRUCTURAL PLAN & ELEV (3 OF 21) PLOTTED: Wednesday, August 10, 2016 - 11:43am USER: christine.nulkowski

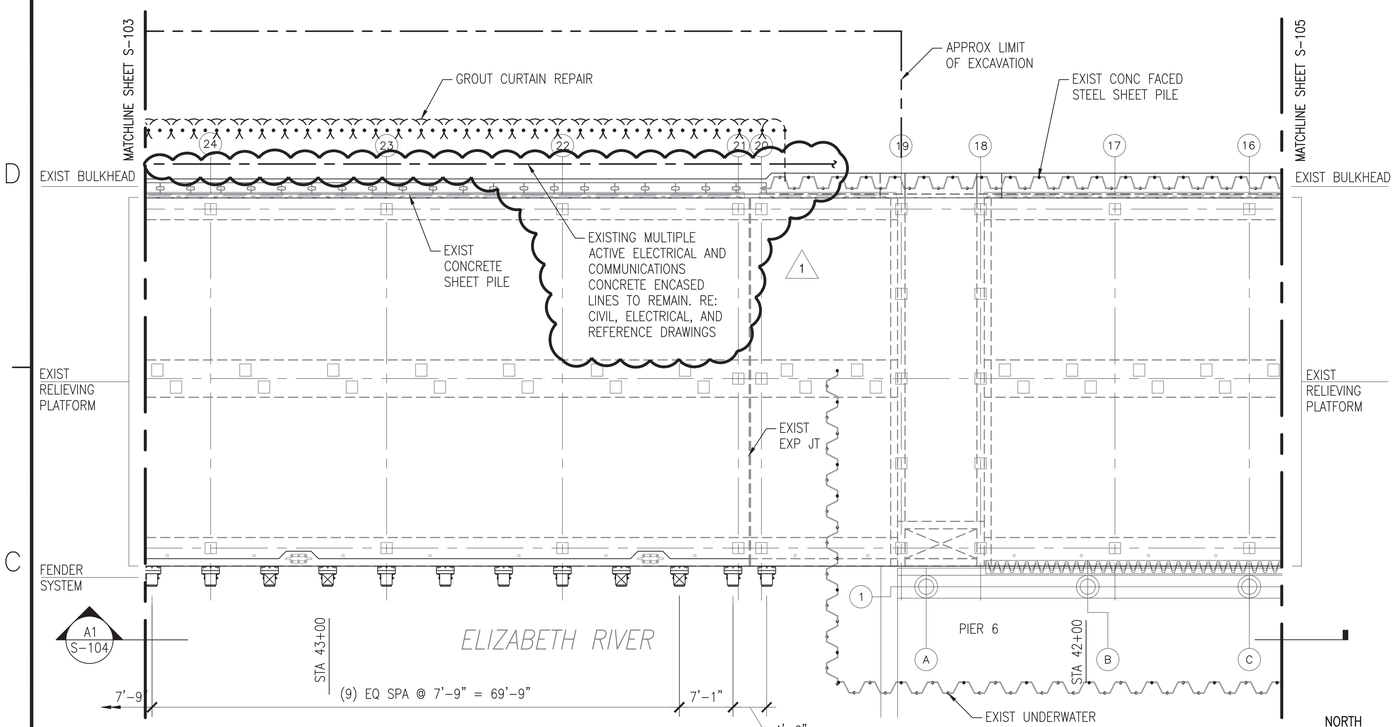

C1 PLAN - Z-308 BULKHEAD (4 OF 7)
SCALE: 1" = 10'

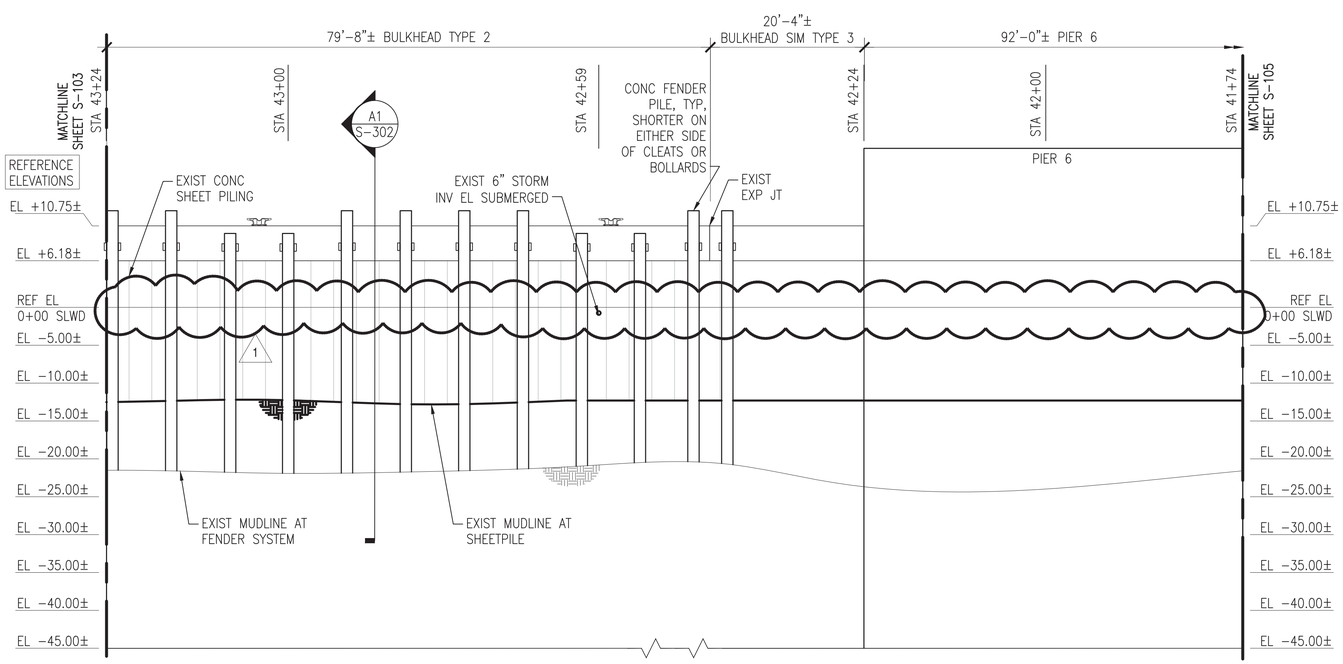

A1 ELEVATION AT FENDER SYSTEM
SCALE: 1" = 10'

S-104

GENERAL SHEET NOTES @ Z-308

1. PROVIDE Z-308 BULKHEAD FENDER SYSTEM COMPLETE, TO INCLUDE, BUT NOT LIMITED TO, PRESTRESSED CONCRETE PILES, WELDMENTS, RUBBER COMPONENTS, AND SPACERS.
2. PROVIDE JET-GROUTED SOIL CURTAIN WALL REPAIRS BEHIND THE BULKHEAD AS SHOWN ON THE PLANS.
3. PROVIDE NEW LADDER(S) AND CLEAT(S) AS IDENTIFIED ON THE DRAWINGS.
4. MUDLINE INFORMATION IS BASED UPON NAVFAC HYDROLOGICAL SURVEY DATA FROM JANUARY 2015 AND IS PROVIDED FOR REFERENCE ONLY.
5. ELEVATIONS SHOWN ON THE SD SERIES DRAWINGS ARE NOTED AS REFERENCE ELEVATIONS, AND CORRESPOND TO THE PROVIDED AS-BUILT DRAWINGS FOR THE BULKHEAD, WITH THE TOP OF CURBING ELEVATION AT +11.0 FEET ABOVE MLW. THE CONTRACTOR SHALL SET UP TEMPORARY BENCHMARKS AND COORDINATE REAL TIME ELEVATIONS WITH THE CIVIL DRAWINGS AND DATUM PROVIDED ON G-002.
6. FOR CONCRETE FENDER PILES, REFER TO SHEET S-505.
7. FOR COMPOSITE FENDER PILES, REFER TO SHEET S-506

TABULATED NEW WORK QUANTITIES (THIS SHEET)

SYMBOL	ITEM	QUANTITY	UNIT
OR	CONCRETE FENDER PILE	12	EA
	COMPOSITE FENDER PILE	–	EA
	42" CLEAT	–	EA
	24" CLEAT	–	EA
	LADDER	–	EA
	TIMBER WALE WITH BLOCKING	–	LF
	TIMBER CHOCK WITH SPACERS	–	LF
(·Y·Y·Y·)	GROUT CURTAIN	90	LF
	CHAIN / POSTS	–	LF/EA

NOTE: ALL NEW WORK DIMENSIONS ARE APPROXIMATE AND REPRESENT THE OVERALL EXTENT OF WORK REQUIRED AT THAT LOCATION. REFER TO TYPICAL SECTIONS/DETAILS AND REFERENCE DRAWINGS FOR ADDITIONAL INFORMATION.

KEY PLAN

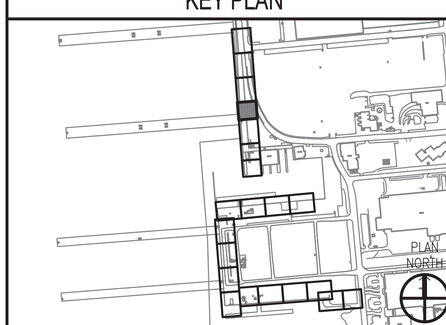

GRAPHIC SCALE

1"=10' 0' 10' 20'

SYM	DESCRIPTION	DATE	APPR.
1	WATER LEVEL WARNINGS & ELEC DUCT CLARIFICATION	8/12/2016	KAD

NAVFAC

SEAL

A/E INFO.

APPROVED
FOR COMMANDER NAVFAC 8-11-16

ACTIVITY
DAVE SEARS

SATISFACTORY TO DATE 6/17/2016
DES ELT DRW KAD CHK CLT
DESIGN MANAGER EDDY THEISZ
BRANCH MANAGER CAT
CHIEF ENGINEER J. HASTE, P.E.
FIRE PROTECTION

DEPARTMENT OF THE NAVY
NAVAL FACILITIES ENGINEERING COMMAND
HAMPTON ROADS IPT - PWD NORFOLK
NAVAL FACILITIES ENGINEERING COMMAND-MID-ATLANTIC
NORFOLK NAVAL STATION
NORFOLK NAVAL STATION, VIRGINIA

CEP-175 AND Z-308 BULKHEAD REPAIR

STRUCTURAL PLAN & ELEV (4 OF 21)

SCALE: AS NOTED
EPROJECT NO. 1370817
CONSTR. CONTR. NO. N/A
NAVFAC DRAWING NO. 12,729,747
SHEET 92 OF 158

S-104

DRAWFORM REVISION: 10 MARCH 2009

FILE NAME: P:\VA\NavalStationNorfolk\Waterfront\Bulkheads\2015_1370817_CEP-1752-308Repair\B_Design\Drawings\Sheet\07_Structural\1370817_S-100 SERIES.dwg LAYOUT NAME: S-104 STRUCTURAL PLAN & ELEV (4 OF 21) PLOTTED: Wednesday, August 10, 2016 - 11:43am USER: christine.nulkowski

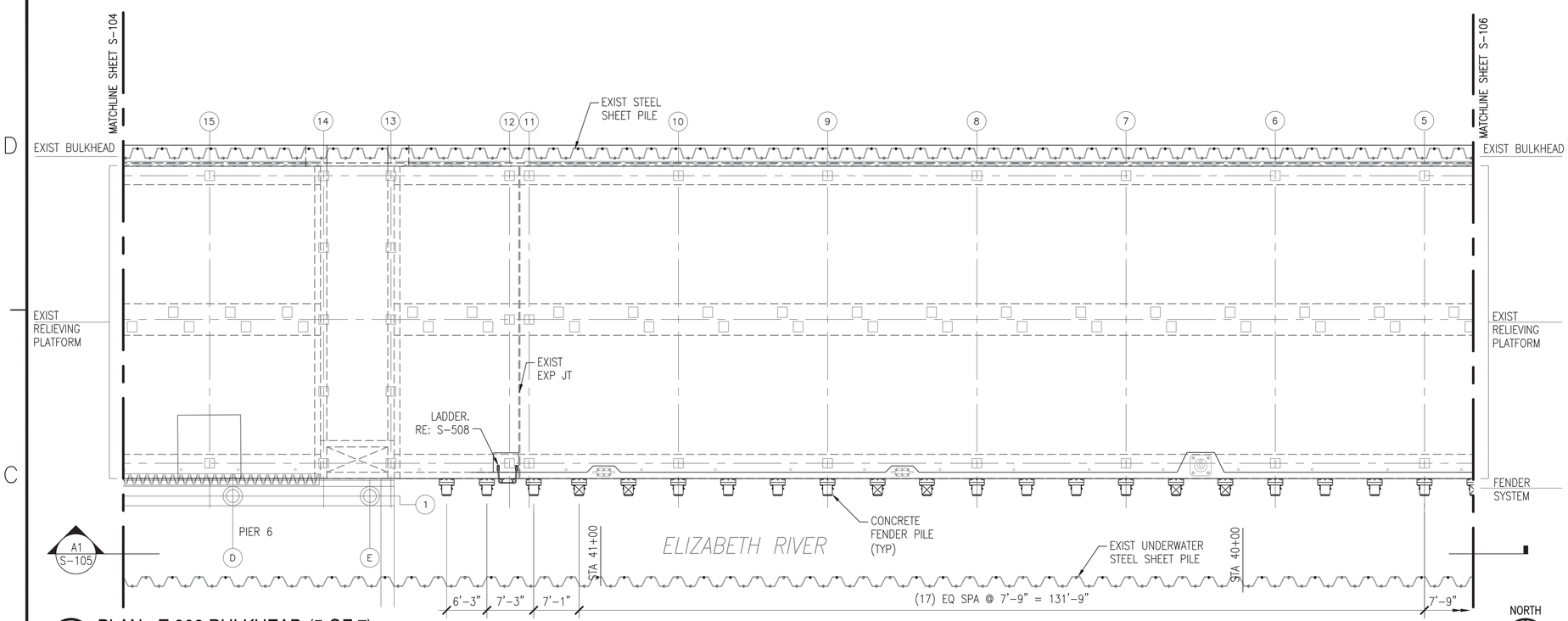

C1 PLAN - Z-308 BULKHEAD (5 OF 7)

SCALE: 1" = 10'

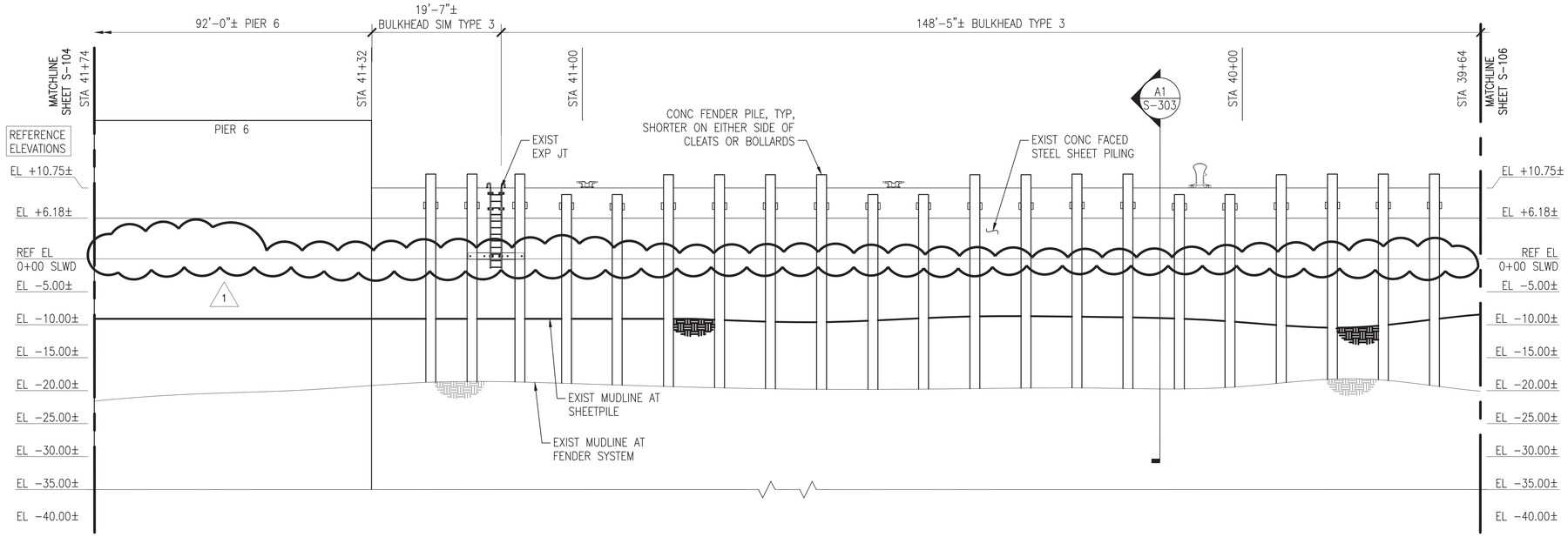

A1 ELEVATION AT FENDER SYSTEM

SCALE: 1" = 10'

S-105

GENERAL SHEET NOTES @ Z-308

1. PROVIDE Z-308 BULKHEAD FENDER SYSTEM COMPLETE, TO INCLUDE, BUT NOT LIMITED TO, PRESTRESSED CONCRETE PILES, WELDMENTS, RUBBER COMPONENTS, AND SPACERS.
2. PROVIDE JET-GROUTED SOIL CURTAIN WALL REPAIRS BEHIND THE BULKHEAD AS SHOWN ON THE PLANS.
3. PROVIDE NEW LADDER(S) AND CLEAT(S) AS IDENTIFIED ON THE DRAWINGS.
4. MUDLINE INFORMATION IS BASED UPON NAVFAC HYDROLOGICAL SURVEY DATA FROM JANUARY 2015 AND IS PROVIDED FOR REFERENCE ONLY.
5. ELEVATIONS SHOWN ON THE SD SERIES DRAWINGS ARE NOTED AS REFERENCE ELEVATIONS, AND CORRESPOND TO THE PROVIDED AS-BUILT DRAWINGS FOR THE BULKHEAD, WITH THE TOP OF CURBING ELEVATION AT +11.0 FEET ABOVE MLW. THE CONTRACTOR SHALL SET UP TEMPORARY BENCHMARKS AND COORDINATE REAL TIME ELEVATIONS WITH THE CIVIL DRAWINGS AND DATUM PROVIDED ON G-002.
6. FOR CONCRETE FENDER PILES, REFER TO SHEET S-505.
7. FOR COMPOSITE FENDER PILES, REFER TO SHEET S-506

TABULATED NEW WORK QUANTITIES (THIS SHEET)

SYMBOL	ITEM	QUANTITY	UNIT
OR	CONCRETE FENDER PILE	21	EA
	COMPOSITE FENDER PILE	–	EA
	42" CLEAT	–	EA
	24" CLEAT	–	EA
	LADDER	1	EA
	TIMBER WALE WITH BLOCKING	–	LF
	TIMBER CHOCK WITH SPACERS	–	LF
(·)(·)(·)	GROUT CURTAIN	–	LF
	CHAIN / POSTS	–	LF/EA

NOTE: ALL NEW WORK DIMENSIONS ARE APPROXIMATE AND REPRESENT THE OVERALL EXTENT OF WORK REQUIRED AT THAT LOCATION. REFER TO TYPICAL SECTIONS/DETAILS AND REFERENCE DRAWINGS FOR ADDITIONAL INFORMATION.

KEY PLAN

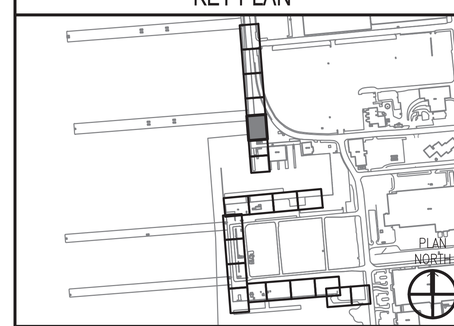

GRAPHIC SCALE

1"=10' 0' 10' 20'

SYM	DESCRIPTION	DATE	APPR.
	REMOVE WATER LEVEL WARNINGS	8/12/2016	KAD

NAVFAC

SEAL

A/E INFO.

APPROVED

FOR COMMANDER NAVFAC 8-11-16

ACTIVITY

DAVE SEARS

SATISFACTORY TO DATE 6/17/2016

DES ELT DRW KAD CHK CLT

DESIGN MANAGER EDDY THEISZ

BRANCH MANAGER CAT

CHIEF ENGINEER J. HASTE, P.E.

FIRE PROTECTION

DEPARTMENT OF THE NAVY
NAVAL FACILITIES ENGINEERING COMMAND
HAMPTON ROADS IPT - PWD NORFOLK

NAVAL FACILITIES ENGINEERING COMMAND-MID-ATLANTIC
NORFOLK NAVAL STATION
NORFOLK NAVAL STATION, NORFOLK, VIRGINIA

CEP-175 AND Z-308 BULKHEAD REPAIR

STRUCTURAL PLAN & ELEV (5 OF 21)

SCALE: AS NOTED

EPROJECT NO. 1370817

CONSTR. CONTR. NO. N/A

NAVFAC DRAWING NO. 12,729,748

SHEET 93 OF 158

S-105

DRAWFORM REVISION: 10 MARCH 2009

FILE NAME: P:\VA\NavalStationNorfolk\Waterfront\Bulkheads\2015_1370817_CEP-1762-308Repair\9_Design\Drawings\Sheet\07_Structural\1370817_S-100 SERIES.dwg LAYOUT NAME: S-105 STRUCTURAL PLAN & ELEV (5 OF 21) PLOTTED: Wednesday, August 10, 2016 - 11:43am USER: christine.rutkowski

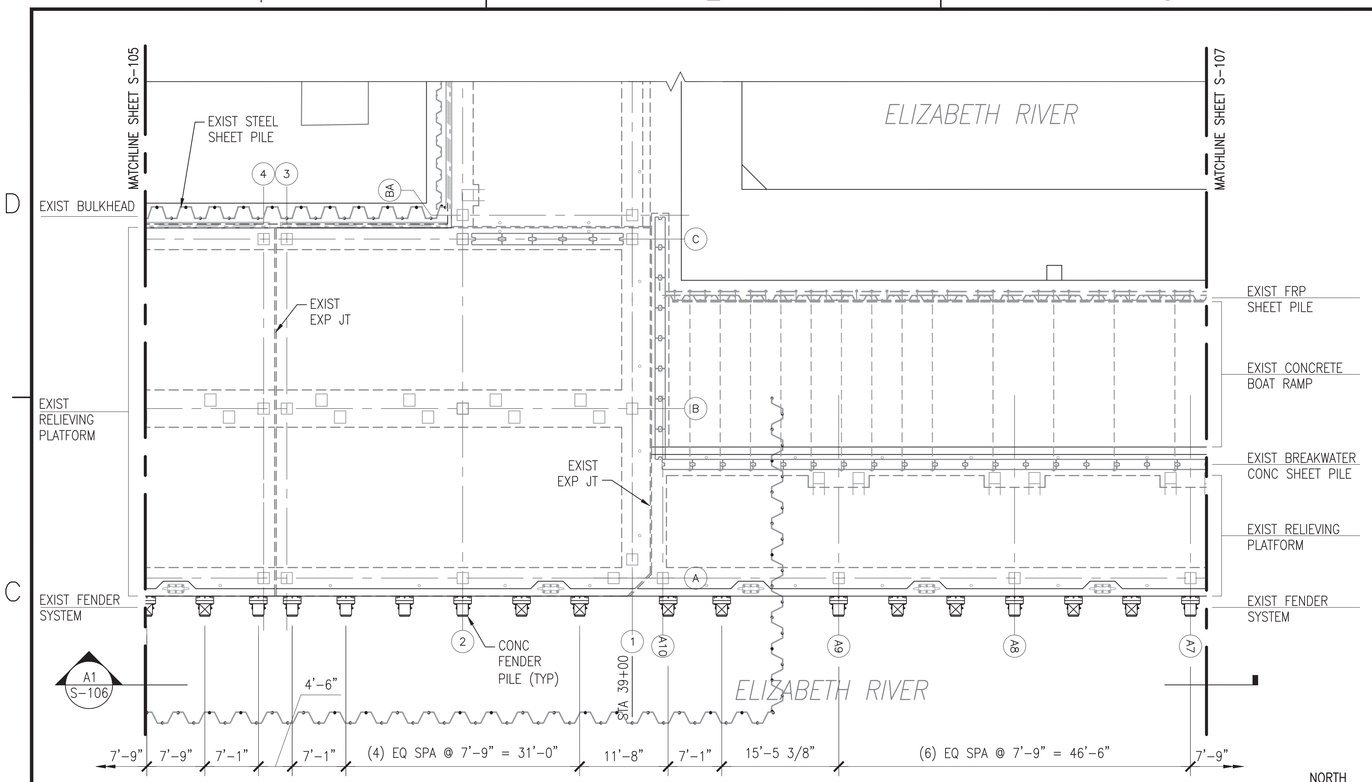

C1 PLAN - Z-308 BULKHEAD (6 OF 7)

SCALE: 1" = 10'

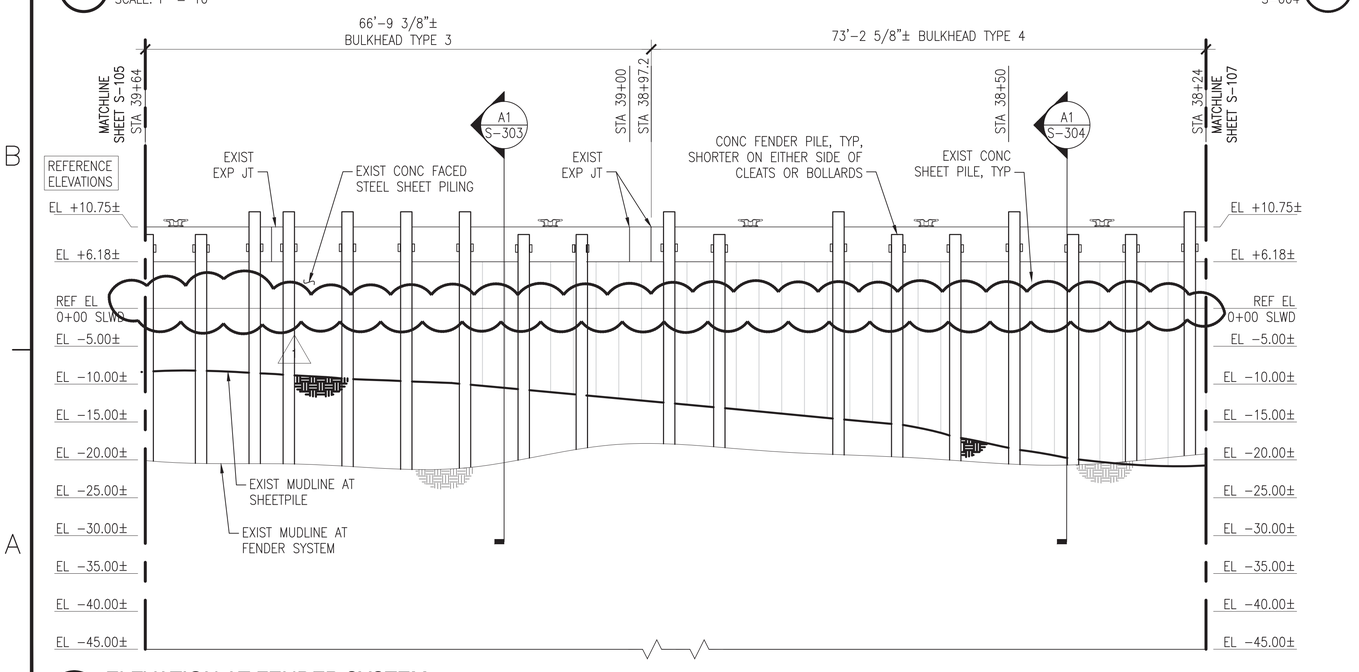

A1 ELEVATION AT FENDER SYSTEM

SCALE: 1" = 10'

S-106

GENERAL SHEET NOTES @ Z-308

1. PROVIDE Z-308 BULKHEAD FENDER SYSTEM COMPLETE, TO INCLUDE, BUT NOT LIMITED TO, PRESTRESSED CONCRETE PILES, WELDMENTS, RUBBER COMPONENTS, AND SPACERS.
2. PROVIDE JET-GROUTED SOIL CURTAIN WALL REPAIRS BEHIND THE BULKHEAD AS SHOWN ON THE PLANS.
3. PROVIDE NEW LADDER(S) AND CLEAT(S) AS IDENTIFIED ON THE DRAWINGS.
4. MUDLINE INFORMATION IS BASED UPON NAVFAC HYDROLOGICAL SURVEY DATA FROM JANUARY 2015 AND IS PROVIDED FOR REFERENCE ONLY.
5. ELEVATIONS SHOWN ON THE SD SERIES DRAWINGS ARE NOTED AS REFERENCE ELEVATIONS, AND CORRESPOND TO THE PROVIDED AS-BUILT DRAWINGS FOR THE BULKHEAD, WITH THE TOP OF CURBING ELEVATION AT +11.0 FEET ABOVE MLW. THE CONTRACTOR SHALL SET UP TEMPORARY BENCHMARKS AND COORDINATE REAL TIME ELEVATIONS WITH THE CIVIL DRAWINGS AND DATUM PROVIDED ON G-002.
6. FOR CONCRETE FENDER PILES, REFER TO SHEET S-505.
7. FOR COMPOSITE FENDER PILES, REFER TO SHEET S-506

TABULATED NEW WORK QUANTITIES (THIS SHEET)

SYMBOL	ITEM	QUANTITY	UNIT
OR	CONCRETE FENDER PILE	18	EA
	COMPOSITE FENDER PILE	–	EA
	42" CLEAT	–	EA
	24" CLEAT	–	EA
	LADDER	–	EA
	TIMBER WALE WITH BLOCKING	–	LF
	TIMBER CHOCK WITH SPACERS	–	LF
(-Y-Y-Y-)	GROUT CURTAIN	–	LF
	CHAIN / POSTS	–	LF/EA

NOTE: ALL NEW WORK DIMENSIONS ARE APPROXIMATE AND REPRESENT THE OVERALL EXTENT OF WORK REQUIRED AT THAT LOCATION. REFER TO TYPICAL SECTIONS/DETAILS AND REFERENCE DRAWINGS FOR ADDITIONAL INFORMATION.

KEY PLAN

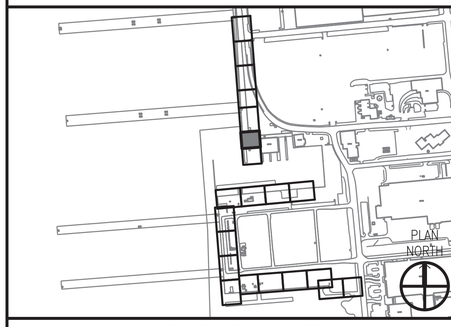

GRAPHIC SCALE

1"=10' 0' 10' 20'

SYM	DESCRIPTION	DATE	APPR.
1	---	---	---
2	---	---	---
3	---	---	---
4	---	---	---
5	---	---	---
6	---	---	---
7	---	---	---

REMOVE WATER LEVEL WARNINGS 8/12/2016 KAD

SEAL

A/E INFO.

APPROVED

FOR COMMANDER NAVFAC 8-11-16

ACTIVITY DAVE SEARS

SATISFACTORY TO DATE 6/17/2016

DES ELT DRW KAD CHK CLT

DESIGN MANAGER EDDY THEISZ

BRANCH MANAGER CAT

CHIEF ENGINEER J. HASTE, P.E.

FIRE PROTECTION

DEPARTMENT OF THE NAVY
NAVAL FACILITIES ENGINEERING COMMAND
HAMPTON ROADS IPT - PWD NORFOLK

NAVAL FACILITIES ENGINEERING COMMAND-MID-ATLANTIC
NORFOLK NAVAL STATION
NORFOLK, VIRGINIA

CEP-175 AND Z-308 BULKHEAD REPAIR

STRUCTURAL PLAN & ELEV (6 OF 21)

SCALE: AS NOTED

EPROJECT NO. 1370817

CONSTR. CONTR. NO. N/A

NAVFAC DRAWING NO. 12,729,749

SHEET 94 OF 158

S-106

DRAWFORM REVISION: 10 MARCH 2009

FILE NAME: P:\VA\NavalStationNorfolk\Waterfront\Bulkheads\2015_1370817_CEP-1752-308Repair\B_Design\Drawings\Sheet\07_Structural\1370817_S-100 SERIES.dwg LAYOUT NAME: S-106 STRUCTURAL PLAN & ELEV (6 OF 21) PLOTTED: Wednesday, August 10, 2016 - 11:43am USER: christine.rulkowski

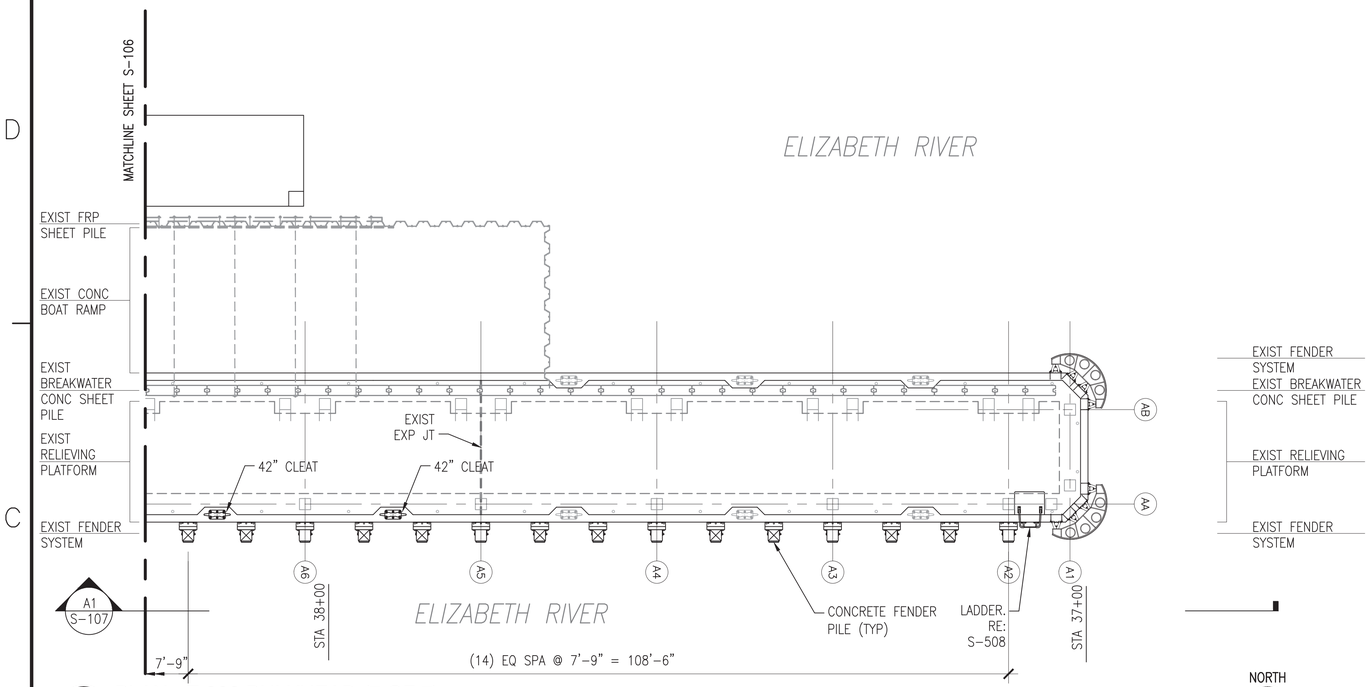

C1 PLAN - Z-308 BULKHEAD (7 OF 7)

SCALE: 1" = 10'

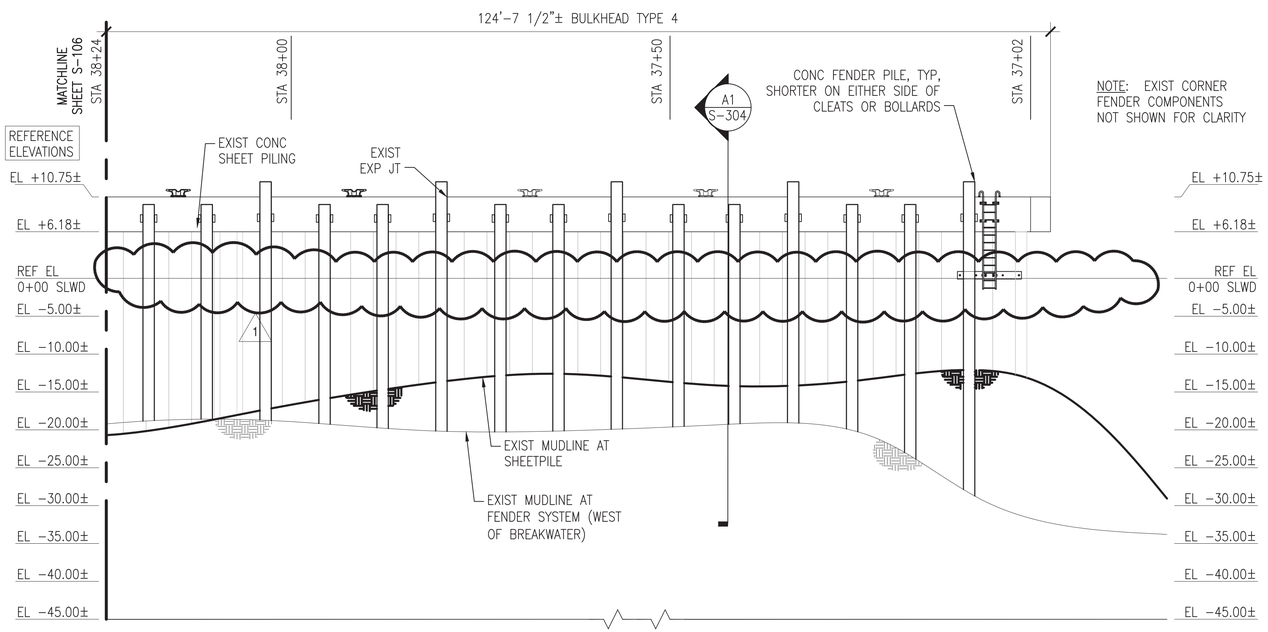

A1 ELEVATION AT FENDER SYSTEM

SCALE: 1" = 10'

S-107

GENERAL SHEET NOTES @ Z-308

1. PROVIDE Z-308 BULKHEAD FENDER SYSTEM COMPLETE, TO INCLUDE, BUT NOT LIMITED TO, PRESTRESSED CONCRETE PILES, WELDMENTS, RUBBER COMPONENTS, AND SPACERS.
2. PROVIDE JET-GROUTED SOIL CURTAIN WALL REPAIRS BEHIND THE BULKHEAD AS SHOWN ON THE PLANS.
3. PROVIDE NEW LADDER(S) AND CLEAT(S) AS IDENTIFIED ON THE DRAWINGS.
4. MUDLINE INFORMATION IS BASED UPON NAVFAC HYDROLOGICAL SURVEY DATA FROM JANUARY 2015 AND IS PROVIDED FOR REFERENCE ONLY.
5. ELEVATIONS SHOWN ON THE SD SERIES DRAWINGS ARE NOTED AS REFERENCE ELEVATIONS, AND CORRESPOND TO THE PROVIDED AS-BUILT DRAWINGS FOR THE BULKHEAD, WITH THE TOP OF CURBING ELEVATION AT +11.0 FEET ABOVE MLW. THE CONTRACTOR SHALL SET UP TEMPORARY BENCHMARKS AND COORDINATE REAL TIME ELEVATIONS WITH THE CIVIL DRAWINGS AND DATUM PROVIDED ON G-002.
6. FOR CONCRETE FENDER PILES, REFER TO SHEET S-505.
7. FOR COMPOSITE FENDER PILES, REFER TO SHEET S-506

TABULATED NEW WORK QUANTITIES (THIS SHEET)

SYMBOL	ITEM	QUANTITY	UNIT
OR	CONCRETE FENDER PILE	15	EA
	COMPOSITE FENDER PILE	–	EA
	42" CLEAT	2	EA
	24" CLEAT	–	EA
	LADDER	1	EA
	TIMBER WALE WITH BLOCKING	–	LF
	TIMBER CHOCK WITH SPACERS	–	LF
(-)(-)(-)	GROUT CURTAIN	–	LF
	CHAIN / POSTS	–	LF/EA

NOTE: ALL NEW WORK DIMENSIONS ARE APPROXIMATE AND REPRESENT THE OVERALL EXTENT OF WORK REQUIRED AT THAT LOCATION. REFER TO TYPICAL SECTIONS/DETAILS AND REFERENCE DRAWINGS FOR ADDITIONAL INFORMATION.

KEY PLAN

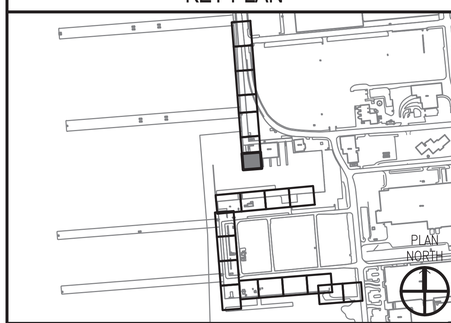

GRAPHIC SCALE

1"=10' 0' 10' 20'

SYM	DESCRIPTION	DATE	APPR.
	REMOVE WATER LEVEL WARNINGS	8/12/2016	KAD

SEAL

A/E INFO.

APPROVED FOR COMMANDER NAVFAC 8-11-16

ACTIVITY: DAVE SEARS

SATISFACTORY TO DATE 6/17/2016

DES ELT DRW KAD CHK CLT

DESIGN MANAGER EDDY THEISZ

BRANCH MANAGER CAT

CHIEF ENGINEER J. HASTE, P.E.

FIRE PROTECTION

DEPARTMENT OF THE NAVY
NAVAL FACILITIES ENGINEERING COMMAND
HAMPTON ROADS IPT - PWD NORFOLK

NAVAL FACILITIES ENGINEERING COMMAND~MID-ATLANTIC
NORFOLK NAVAL STATION
NORFOLK NAVAL STATION, NORFOLK, VIRGINIA

CEP-175 AND Z-308 BULKHEAD REPAIR

STRUCTURAL PLAN & ELEV (7 OF 21)

SCALE: AS NOTED

EPROJECT NO. 1370817

CONSTR. CONTR. NO. N/A

NAVFAC DRAWING NO. 12,729,750

SHEET 95 OF 158

S-107

DRAWFORM REVISION: 10 MARCH 2009

FILE NAME: P:\VA\NavalStationNorfolk\Waterfront\Bulkheads\2015_1370817_CEP-1762-308Repair\9_Design\Drawings\Sheet\07_Structural\1370817_S-100 SERIES.dwg LAYOUT NAME: S-107 STRUCTURAL PLAN & ELEV (7 OF 21) PLOTTED: Wednesday, August 10, 2016 - 11:44am USER: christine.rutkowski

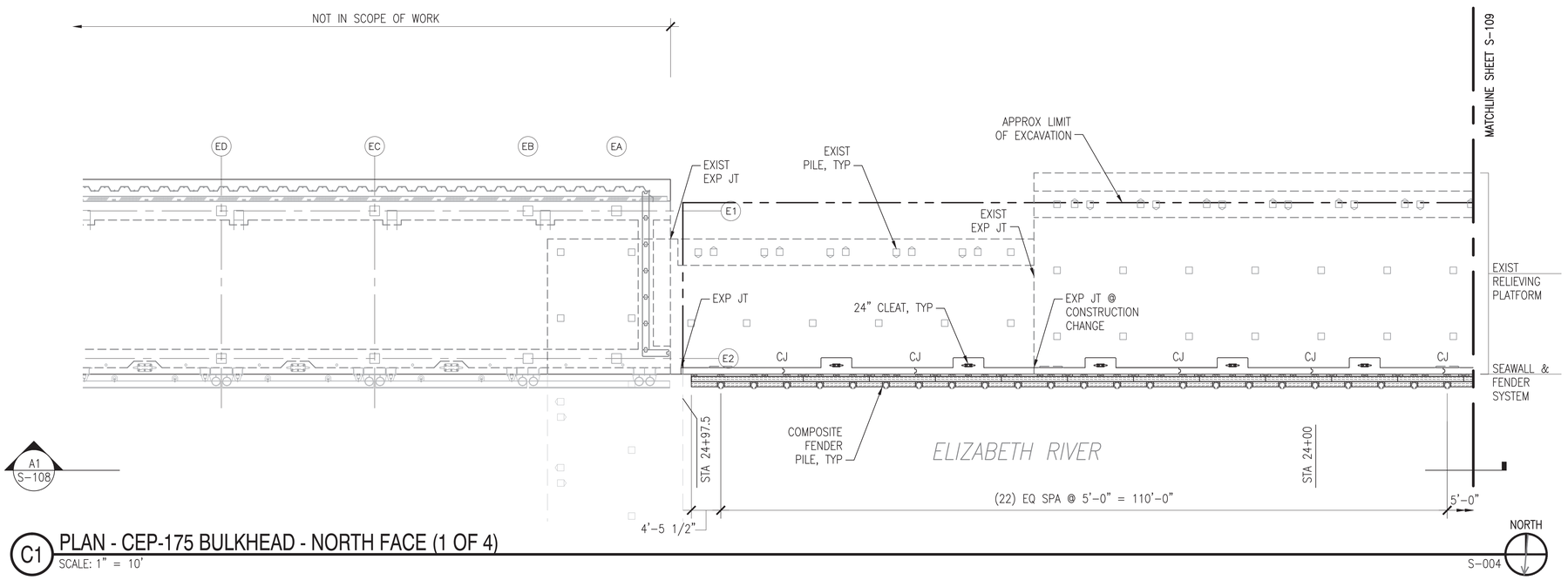

C1 PLAN - CEP-175 BULKHEAD - NORTH FACE (1 OF 4)

SCALE: 1" = 10'

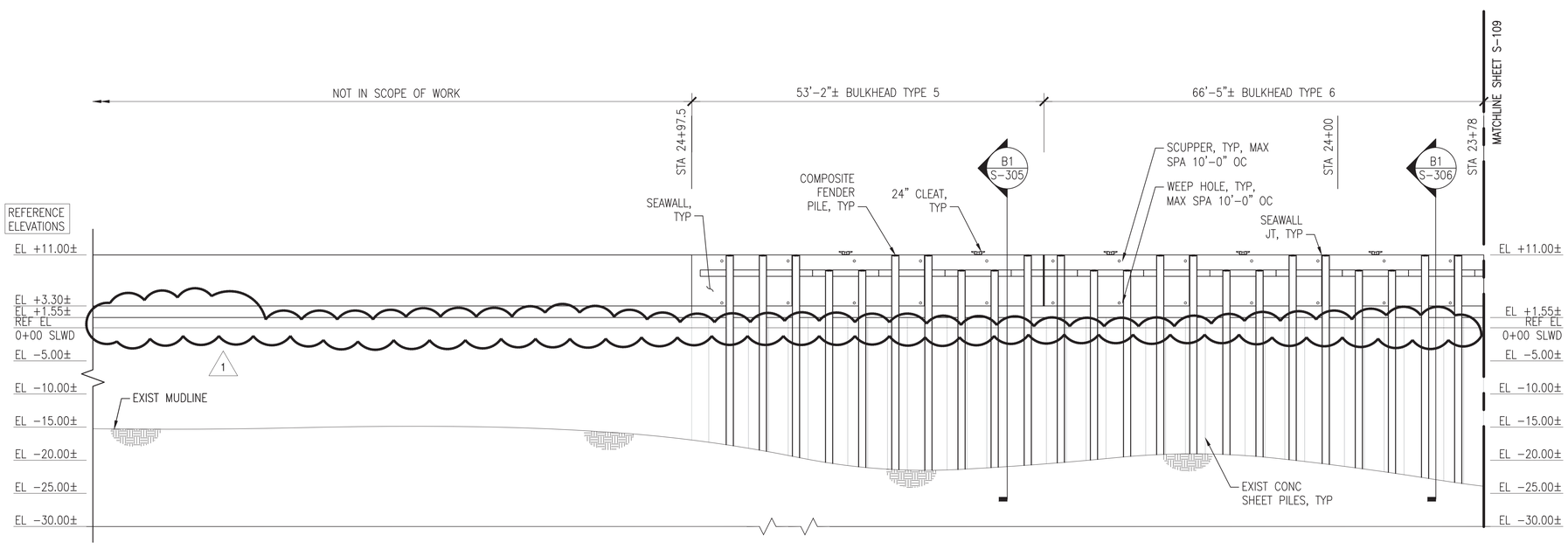

A1 ELEVATION OF BULKHEAD

SCALE: 1" = 10'

S-108

GENERAL SHEET NOTES @ CEP-175

1. PROVIDE CEP-175 BULKHEAD FENDER SYSTEM COMPLETE, TO INCLUDE, BUT NOT LIMITED TO, PRESTRESSED CONCRTE FENDER PILES (WEST FACE), COMPOSITE PILES (NORTH AND SOUTH FACES), CHOCKS, WALES, BLOCKING, WELDMENTS, AND SPACERS.
2. PROVIDE CEP-175 BULKHEAD SEAWALL SYSTEM COMPLETE, TO INCLUDE, BUT NOT LIMITED TO, SEAWALL, CURBING, CLEATS, AND LADDERS.
3. PROVIDE JET-GROUTED SOIL CURTAIN WALL REPAIRS BEHIND THE BULKHEAD AS SHOWN ON THE PLANS.
4. PROVIDE ADDITIONAL RIP RAP MATERIAL OVERLAY FOR SHIP PILE TOE STABILIZATION AS SHOWN ON THE PLANS, SECTIONS, AND DETAILS.
5. PROVIDE CHAINRAIL SYSTEM COMPLETE, TO INCLUDE, BUT NOT LIMITED TO, CHAIN, POSTS, ANCHORS, AND FOUNDATIONS. NOTE: POST SPACING IS 8'-0" MAX, BUT SHALL ADJUST AT CLEAT LOCATIONS, TO ENSURE CLEATS ARE CENTERED BETWEEN POSTS. CHAINRAIL SYSTEM SHALL BE ON THE WEST SIDE OF CEP-175 AND EXTEND AROUND THE CORNERS OF THE NORTH AND SOUTH SIDES OF CEP-175 APPROXIMATELY 100'-0". REFER TO DETAILS ON S-507.
6. MUDLINE INFORMATION IS BASED UPON NAVFAC HYDROLOGICAL SURVEY DATA FROM JANUARY 2015 AND IS PROVIDED FOR REFERENCE ONLY.
7. ELEVATIONS SHOWN ON THE SD SERIES DRAWINGS ARE NOTED AS REFERENCE ELEVATIONS, AND CORRESPOND TO THE PROVIDED AS-BUILT DRAWINGS FOR THE BULKHEAD. CONTRACTOR SHALL SET UP TEMPORARY BENCHMARKS AND COORDINATE REAL TIME ELEVATIONS WITH CIVIL DRAWINGS AND DATUM PROVIDED ON G-002.
8. FOR CONCRETE FENDER PILES, REFER TO SHEET S-505.
9. FOR COMPOSITE FENDER PILES, REFER TO SHEET S-506.
10. FOR TYPICAL EXPANSION JOINT, CONSTRUCTION JOINT, AND SEAWALL CORNER DETAILS, REFER TO SHEET S-502.

TABULATED NEW WORK QUANTITIES (THIS SHEET)

SYMBOL	ITEM	QUANTITY	UNIT
OR	CONCRETE FENDER PILE	–	EA
	COMPOSITE FENDER PILE	23	EA
	42" CLEAT	–	EA
	24" CLEAT	5	EA
	LADDER	–	EA
	TIMBER WALE WITH BLOCKING	120	LF
	TIMBER CHOCK WITH SPACERS	96	LF
	GROUT CURTAIN	–	LF
	CHAIN / POSTS	–	LF/EA

NOTE: ALL NEW WORK DIMENSIONS ARE APPROXIMATE AND REPRESENT THE OVERALL EXTENT OF WORK REQUIRED AT THAT LOCATION. REFER TO TYPICAL SECTIONS/DETAILS AND REFERENCE DRAWINGS FOR ADDITIONAL INFORMATION.

KEY PLAN

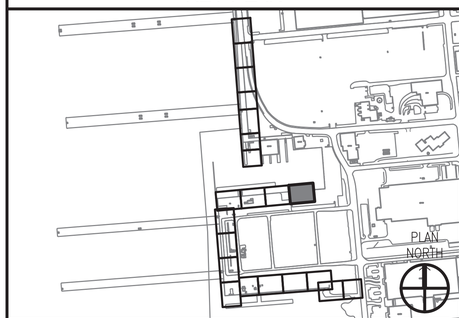

GRAPHIC SCALE

1"=10' 0' 10' 20'

SYM	DESCRIPTION	DATE	APPR.
1	REMOVE WATER LEVEL WARNINGS	8/12/2016	KAD

NAVFAC

SEAL

A/E INFO

APPROVED

FOR COMMANDER NAVFAC 8-11-16

ACTIVITY DAVE SEARS

SATISFACTORY TO DATE 6/17/2016

DES ELT DRW KAD CHK CLT

DESIGN MANAGER EDDY THEISZ

BRANCH MANAGER CAS

CHIEF ENGINEER J. HASTE, P.E.

FIRE PROTECTION

DEPARTMENT OF THE NAVY
NAVAL FACILITIES ENGINEERING COMMAND
HAMPTON ROADS IPT - PWD NORFOLK

NAVAL FACILITIES ENGINEERING COMMAND-MID-ATLANTIC
NORFOLK NAVAL STATION

NORFOLK NAVAL STATION NORFOLK, VIRGINIA

CEP-175 AND Z-308 BULKHEAD REPAIR

STRUCTURAL PLAN & ELEV (8 OF 21)

SCALE: AS NOTED

EPROJECT NO. 1370817

CONSTR. CONTR. NO. N/A

NAVFAC DRAWING NO. 12,729,751

SHEET 96 OF 158

S-108

DRAWFORM REVISION: 10 MARCH 2009

FILE NAME: P:\VA\NavalStationNorfolk\Waterfront\Bulkheads\2015_1370817_CEP-1752-308Repair\8_Design\Drawings\Sheet\07_Structural\1370817_S-100 SERIES.dwg LAYOUT NAME: S-108 STRUCTURAL PLAN & ELEV (8 OF 21) PLOTTED: Wednesday, August 10, 2016 - 11:44am USER: christine.rulkowski

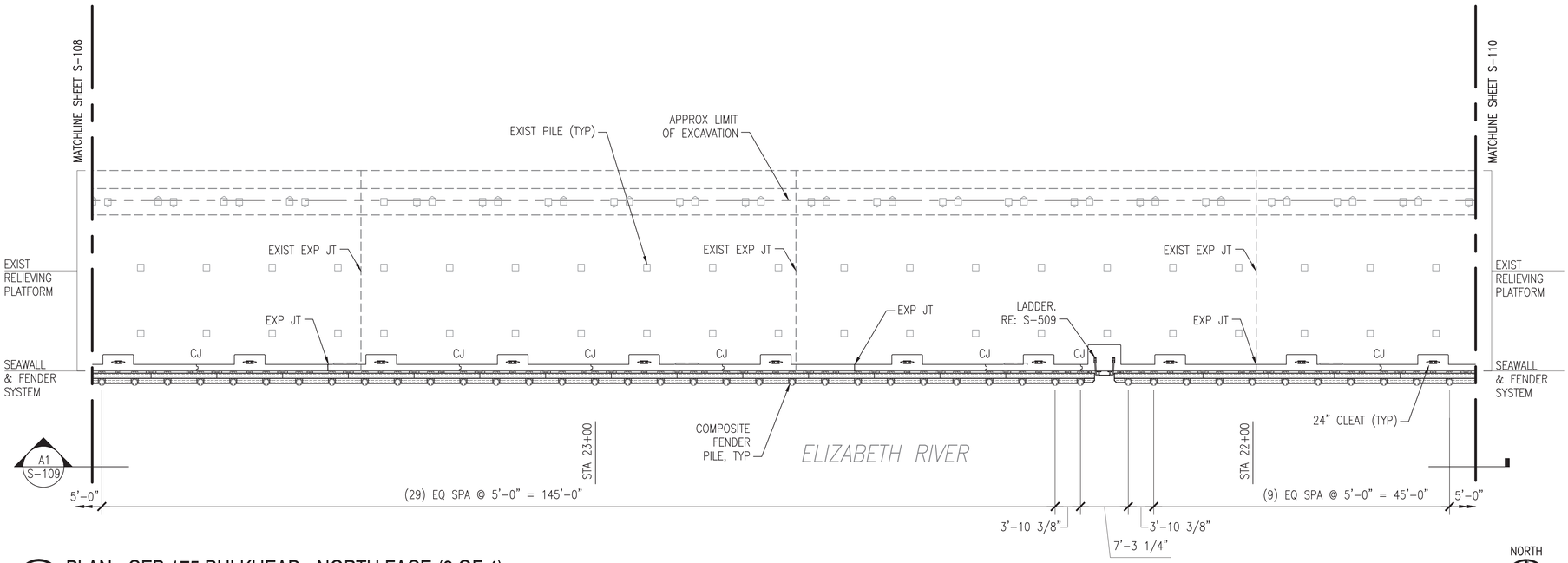

C1 PLAN - CEP-175 BULKHEAD - NORTH FACE (2 OF 4)

SCALE: 1" = 10'

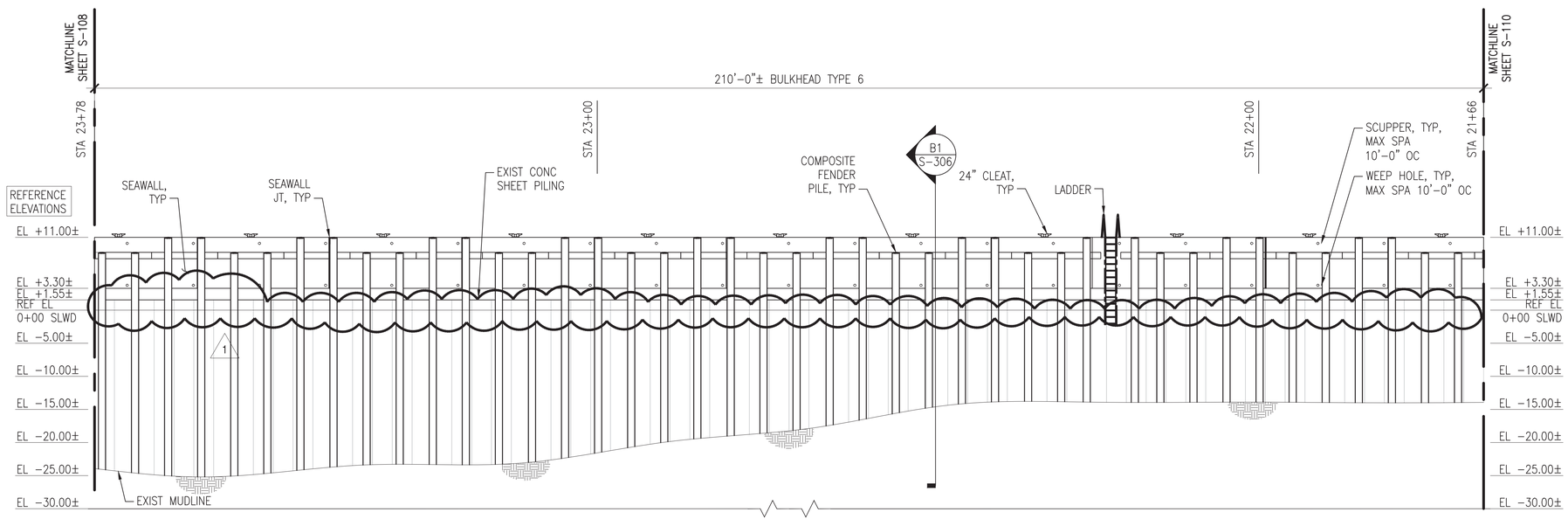

A1 ELEVATION OF BULKHEAD

SCALE: 1" = 10'

S-109

GENERAL SHEET NOTES @ CEP-175

1. PROVIDE CEP-175 BULKHEAD FENDER SYSTEM COMPLETE, TO INCLUDE, BUT NOT LIMITED TO, PRESTRESSED CONCRTE FENDER PILES (WEST FACE), COMPOSITE PILES (NORTH AND SOUTH FACES), CHOCKS, WALES, BLOCKING, WELDMENTS, AND SPACERS.
2. PROVIDE CEP-175 BULKHEAD SEAWALL SYSTEM COMPLETE, TO INCLUDE, BUT NOT LIMITED TO, SEAWALL, CURBING, CLEATS, AND LADDERS.
3. PROVIDE JET-GROUTED SOIL CURTAIN WALL REPAIRS BEHIND THE BULKHEAD AS SHOWN ON THE PLANS.
4. PROVIDE ADDITIONAL RIP RAP MATERIAL OVERLAY FOR SHIP PILE TOE STABILIZATION AS SHOWN ON THE PLANS, SECTIONS, AND DETAILS.
5. PROVIDE CHAINRAIL SYSTEM COMPLETE, TO INCLUDE, BUT NOT LIMITED TO, CHAIN, POSTS, ANCHORS, AND FOUNDATIONS. NOTE: POST SPACING IS 8'-0" MAX, BUT SHALL ADJUST AT CLEAT LOCATIONS, TO ENSURE CLEATS ARE CENTERED BETWEEN POSTS. CHAINRAIL SYSTEM SHALL BE ON THE WEST SIDE OF CEP-175 AND EXTEND AROUND THE CORNERS OF THE NORTH AND SOUTH SIDES OF CEP-175 APPROXIMATELY 100'-0". REFER TO DETAILS ON S-507.
6. MUDLINE INFORMATION IS BASED UPON NAVFAC HYDROLOGICAL SURVEY DATA FROM JANUARY 2015 AND IS PROVIDED FOR REFERENCE ONLY.
7. ELEVATIONS SHOWN ON THE SD SERIES DRAWINGS ARE NOTED AS REFERENCE ELEVATIONS, AND CORRESPOND TO THE PROVIDED AS-BUILT DRAWINGS FOR THE BULKHEAD. CONTRACTOR SHALL SET UP TEMPORARY BENCHMARKS AND COORDINATE REAL TIME ELEVATIONS WITH CIVIL DRAWINGS AND DATUM PROVIDED ON G-002.
8. FOR CONCRETE FENDER PILES, REFER TO SHEET S-505.
9. FOR COMPOSITE FENDER PILES, REFER TO SHEET S-506.
10. FOR TYPICAL EXPANSION JOINT, CONSTRUCTION JOINT, AND SEAWALL CORNER DETAILS, REFER TO SHEET S-502.

TABULATED NEW WORK QUANTITIES (THIS SHEET)

SYMBOL	ITEM	QUANTITY	UNIT
OR	CONCRETE FENDER PILE	–	EA
	COMPOSITE FENDER PILE	42	EA
	42" CLEAT	–	EA
	24" CLEAT	11	EA
	LADDER	1	EA
	TIMBER WALE WITH BLOCKING	210	LF
	TIMBER CHOCK WITH SPACERS	165	LF
	GROUT CURTAIN	–	LF
	CHAIN / POSTS	–	LF/EA

NOTE: ALL NEW WORK DIMENSIONS ARE APPROXIMATE AND REPRESENT THE OVERALL EXTENT OF WORK REQUIRED AT THAT LOCATION. REFER TO TYPICAL SECTIONS/DETAILS AND REFERENCE DRAWINGS FOR ADDITIONAL INFORMATION.

KEY PLAN

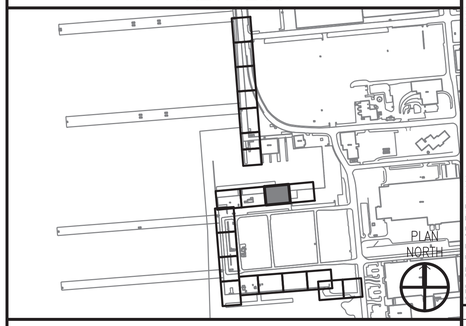

GRAPHIC SCALE

1"=10' 0' 10' 20'

SYM	DESCRIPTION	DATE	APPR.
	REMOVE WATER LEVEL WARNINGS	8/12/2016	KAD

NAVFAC

SEAL

A/E INFO

APPROVED

FOR COMMANDER NAVFAC 8-11-16

ACTIVITY DAVE SEARS

SATISFACTORY TO DATE 6/17/2016

DES ELT DRW KAD CHK CLT

DESIGN MANAGER EDDY THEISZ

BRANCH MANAGER CAT

CHIEF ENGINEER J. HASTE, P.E.

FIRE PROTECTION

DEPARTMENT OF THE NAVY
NAVAL FACILITIES ENGINEERING COMMAND
HAMPTON ROADS IPT – PWD NORFOLK

NAVAL FACILITIES ENGINEERING COMMAND–MID-ATLANTIC
NORFOLK NAVAL STATION
NORFOLK, VIRGINIA

NORFOLK NAVAL STATION
CEP-175 AND Z-308 BULKHEAD REPAIR

STRUCTURAL PLAN & ELEV (9 OF 21)

SCALE: AS NOTED

EPROJECT NO. 1370817

CONSTR. CONTR. NO. N/A

NAVFAC DRAWING NO. 12,729,752

SHEET 97 OF 158

S-109

DRAWFORM REVISION: 10 MARCH 2009

FILE NAME: P:\VA\NavalStationNorfolk\Waterfront\Bulkheads\2015_1370817_CEP-1752-308Repair\B_Design\Drawings\Sheet\07_Structural\1370817_S-100 SERIES.dwg LAYOUT NAME: S-109 STRUCTURAL PLAN & ELEV (9 OF 21) PLOTTED: Wednesday, August 10, 2016 - 11:44am USER: christine.rulkowski

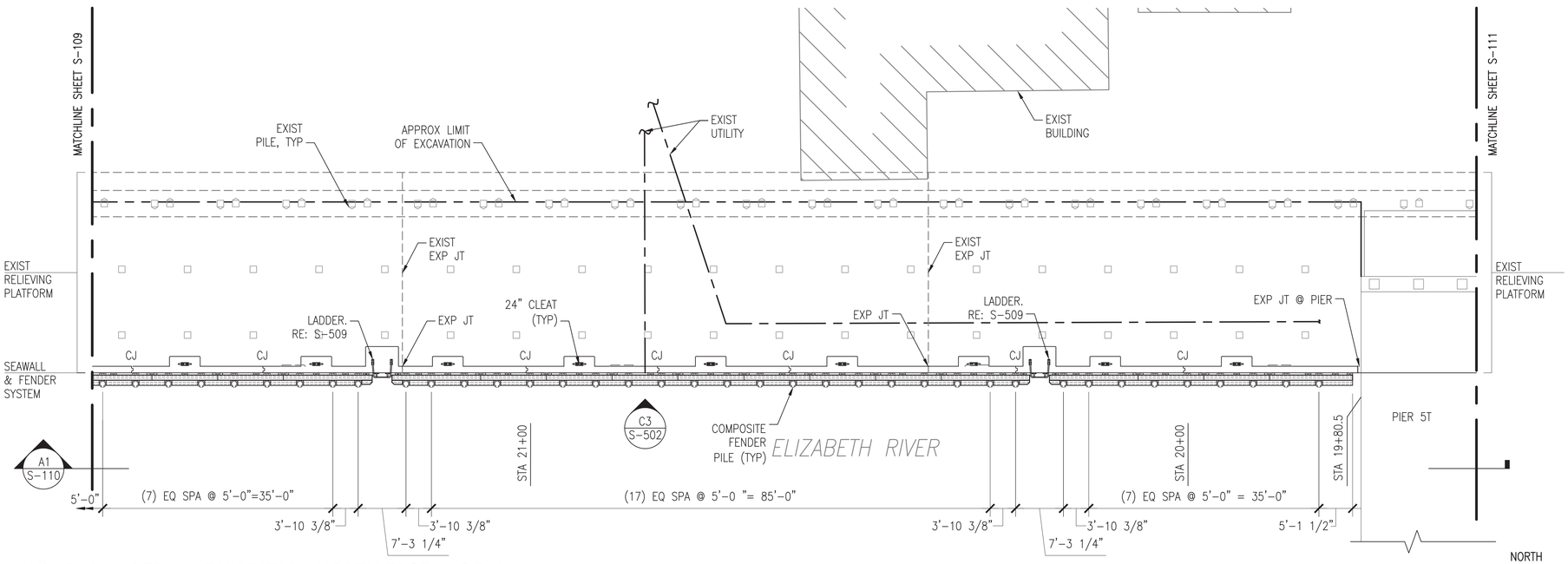

C1 PLAN - CEP-175 BULKHEAD - NORTH FACE (3 OF 4)

SCALE: 1" = 10'

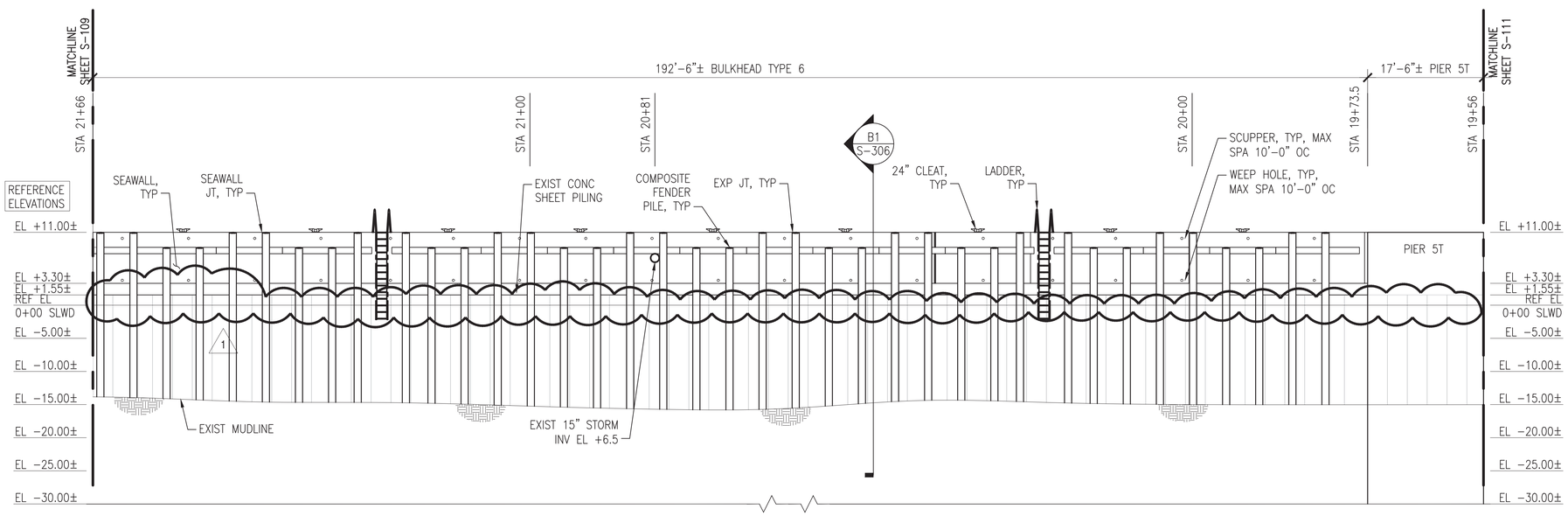

A1 ELEVATION OF BULKHEAD

SCALE: 1" = 10'

GENERAL SHEET NOTES @ CEP-175

1. PROVIDE CEP-175 BULKHEAD FENDER SYSTEM COMPLETE, TO INCLUDE, BUT NOT LIMITED TO, PRESTRESSED CONCRTE FENDER PILES (WEST FACE), COMPOSITE PILES (NORTH AND SOUTH FACES), CHOCKS, WALES, BLOCKING, WELDMENTS, AND SPACERS.
2. PROVIDE CEP-175 BULKHEAD SEAWALL SYSTEM COMPLETE, TO INCLUDE, BUT NOT LIMITED TO, SEAWALL, CURBING, CLEATS, AND LADDERS.
3. PROVIDE JET-GROUTED SOIL CURTAIN WALL REPAIRS BEHIND THE BULKHEAD AS SHOWN ON THE PLANS.
4. PROVIDE ADDITIONAL RIP RAP MATERIAL OVERLAY FOR SHIP PILE TOE STABILIZATION AS SHOWN ON THE PLANS, SECTIONS, AND DETAILS.
5. PROVIDE CHAINRAIL SYSTEM COMPLETE, TO INCLUDE, BUT NOT LIMITED TO, CHAIN, POSTS, ANCHORS, AND FOUNDATIONS. NOTE: POST SPACING IS 8'-0" MAX, BUT SHALL ADJUST AT CLEAT LOCATIONS, TO ENSURE CLEATS ARE CENTERED BETWEEN POSTS. CHAINRAIL SYSTEM SHALL BE ON THE WEST SIDE OF CEP-175 AND EXTEND AROUND THE CORNERS OF THE NORTH AND SOUTH SIDES OF CEP-175 APPROXIMATELY 100'-0". REFER TO DETAILS ON S-507.
6. MUDLINE INFORMATION IS BASED UPON NAVFAC HYDROLOGICAL SURVEY DATA FROM JANUARY 2015 AND IS PROVIDED FOR REFERENCE ONLY.
7. ELEVATIONS SHOWN ON THE SD SERIES DRAWINGS ARE NOTED AS REFERENCE ELEVATIONS, AND CORRESPOND TO THE PROVIDED AS-BUILT DRAWINGS FOR THE BULKHEAD. CONTRACTOR SHALL SET UP TEMPORARY BENCHMARKS AND COORDINATE REAL TIME ELEVATIONS WITH CIVIL DRAWINGS AND DATUM PROVIDED ON G-002.
8. FOR CONCRETE FENDER PILES, REFER TO SHEET S-505.
9. FOR COMPOSITE FENDER PILES, REFER TO SHEET S-506.
10. FOR TYPICAL EXPANSION JOINT, CONSTRUCTION JOINT, AND SEAWALL CORNER DETAILS, REFER TO SHEET S-502.

TABULATED NEW WORK QUANTITIES (THIS SHEET)

SYMBOL	ITEM	QUANTITY	UNIT
OR	CONCRETE FENDER PILE	–	EA
	COMPOSITE FENDER PILE	38	EA
	42" CLEAT	–	EA
	24" CLEAT	9	EA
	LADDER	2	EA
	TIMBER WALE WITH BLOCKING	187	LF
	TIMBER CHOCK WITH SPACERS	146	LF
	GROUT CURTAIN	–	LF
	CHAIN / POSTS	–	LF/EA

NOTE: ALL NEW WORK DIMENSIONS ARE APPROXIMATE AND REPRESENT THE OVERALL EXTENT OF WORK REQUIRED AT THAT LOCATION. REFER TO TYPICAL SECTIONS/DETAILS AND REFERENCE DRAWINGS FOR ADDITIONAL INFORMATION.

KEY PLAN

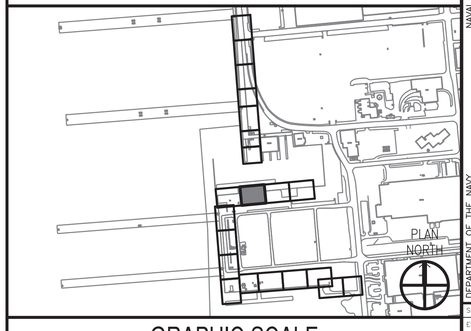

GRAPHIC SCALE

1"=10' 0' 10' 20'

SYM	DESCRIPTION	DATE	APPR.
1	REMOVE WATER LEVEL WARNINGS	8/12/2016	KAD

NAVFAC

SEAL

A/E INFO

APPROVED

FOR COMMANDER NAVFAC 8-11-16

ACTIVITY DAVE SEARS

SATISFACTORY TO DATE 6/17/2016

DES ELT DRW KAD CHK CLT

DESIGN MANAGER EDDY THEISZ

BRANCH MANAGER CAT

CHIEF ENGINEER J. HASTE, P.E.

FIRE PROTECTION

DEPARTMENT OF THE NAVY
NAVAL FACILITIES ENGINEERING COMMAND
HAMPTON ROADS IPT - PWD NORFOLK

NAVAL FACILITIES ENGINEERING COMMAND-MID-ATLANTIC
NORFOLK NAVAL STATION
NORFOLK NAVAL STATION, NORFOLK, VIRGINIA

CEP-175 AND Z-308 BULKHEAD REPAIR

STRUCTURAL PLAN & ELEV (10 OF 21)

SCALE: AS NOTED

EPROJECT NO. 1370817

CONSTR. CONTR. NO. N/A

NAVFAC DRAWING NO. 12,729,753

SHEET 98 OF 158

S-110

DRAWFORM REVISION: 10 MARCH 2009

FILE NAME: P:\VA\NavalStationNorfolk\Waterfront\Bulkheads\2015_1370817_CEP-1762-308Repair\B_Design\Drawings\Sheet\07_Structural\1370817_S-100 SERIES.dwg LAYOUT NAME: S-110 STRUCTURAL PLAN & ELEV (10 OF 21) PLOTTED: Wednesday, August 10, 2016 - 11:44am USER: christine.rukowski

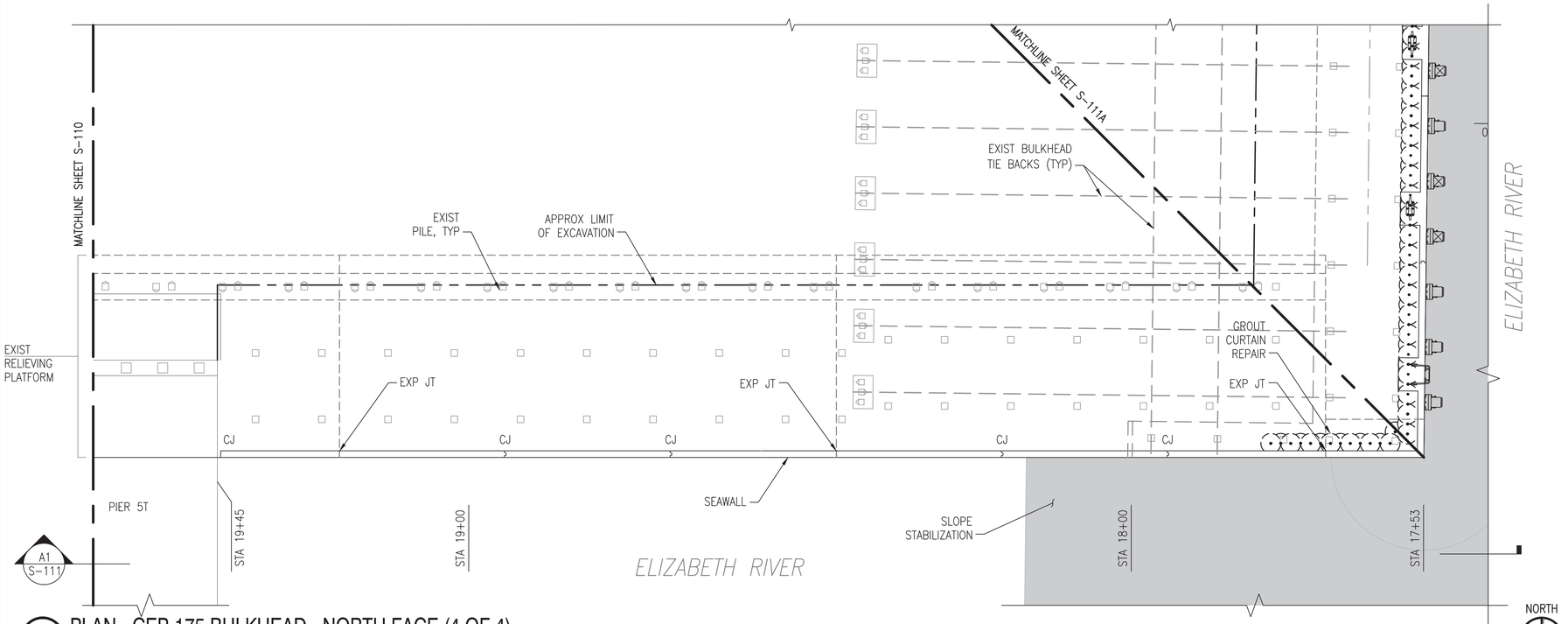

C1 PLAN - CEP-175 BULKHEAD - NORTH FACE (4 OF 4)

SCALE: 1" = 10'

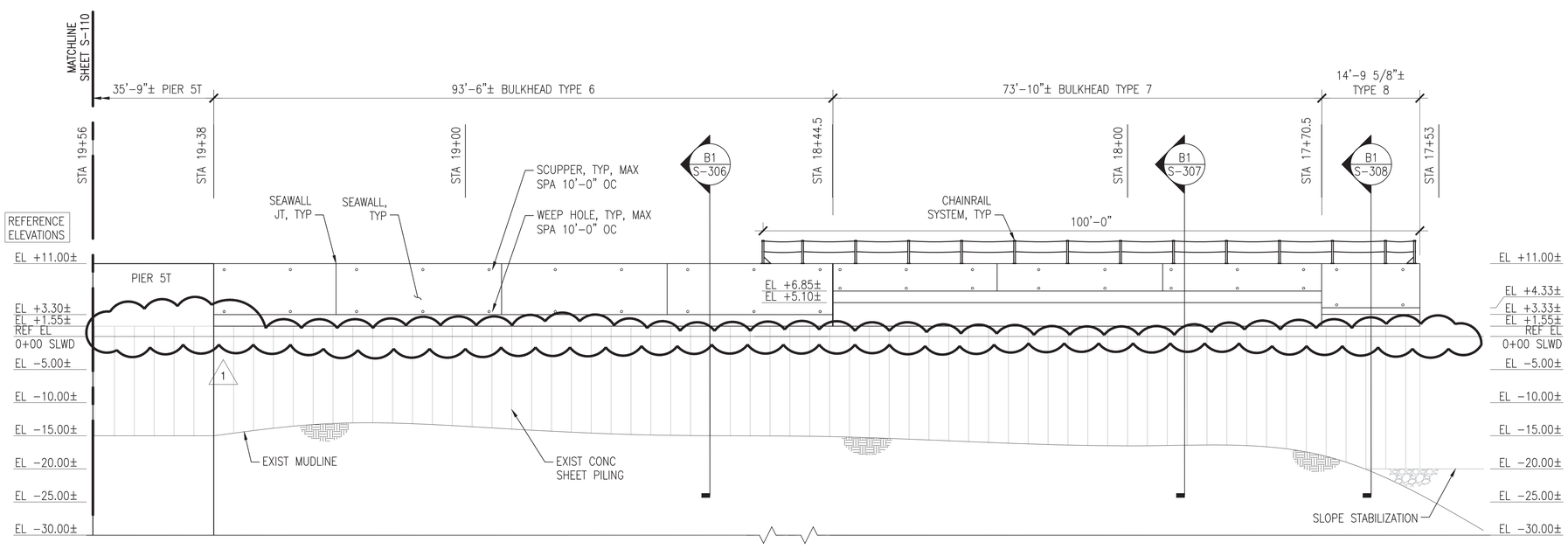

A1 ELEVATION OF BULKHEAD

SCALE: 1" = 10'

S-111

GENERAL SHEET NOTES @ CEP-175

1. PROVIDE CEP-175 BULKHEAD FENDER SYSTEM COMPLETE, TO INCLUDE, BUT NOT LIMITED TO, PRESTRESSED CONCRTE FENDER PILES (WEST FACE), COMPOSITE PILES (NORTH AND SOUTH FACES), CHOCKS, WALES, BLOCKING, WELDMENTS, AND SPACERS.
2. PROVIDE CEP-175 BULKHEAD SEAWALL SYSTEM COMPLETE, TO INCLUDE, BUT NOT LIMITED TO, SEAWALL, CURBING, CLEATS, AND LADDERS.
3. PROVIDE JET-GROUTED SOIL CURTAIN WALL REPAIRS BEHIND THE BULKHEAD AS SHOWN ON THE PLANS.
4. PROVIDE ADDITIONAL RIP RAP MATERIAL OVERLAY FOR SHIP PILE TOE STABILIZATION AS SHOWN ON THE PLANS, SECTIONS, AND DETAILS.
5. PROVIDE CHAINRAIL SYSTEM COMPLETE, TO INCLUDE, BUT NOT LIMITED TO, CHAIN, POSTS, ANCHORS, AND FOUNDATIONS. NOTE: POST SPACING IS 8'-0" MAX, BUT SHALL ADJUST AT CLEAT LOCATIONS, TO ENSURE CLEATS ARE CENTERED BETWEEN POSTS. CHAINRAIL SYSTEM SHALL BE ON THE WEST SIDE OF CEP-175 AND EXTEND AROUND THE CORNERS OF THE NORTH AND SOUTH SIDES OF CEP-175 APPROXIMATELY 100'-0". REFER TO DETAILS ON S-507.
6. MUDLINE INFORMATION IS BASED UPON NAVFAC HYDROLOGICAL SURVEY DATA FROM JANUARY 2015 AND IS PROVIDED FOR REFERENCE ONLY.
7. ELEVATIONS SHOWN ON THE SD SERIES DRAWINGS ARE NOTED AS REFERENCE ELEVATIONS, AND CORRESPOND TO THE PROVIDED AS-BUILT DRAWINGS FOR THE BULKHEAD. CONTRACTOR SHALL SET UP TEMPORARY BENCHMARKS AND COORDINATE REAL TIME ELEVATIONS WITH CIVIL DRAWINGS AND DATUM PROVIDED ON G-002.
8. FOR CONCRETE FENDER PILES, REFER TO SHEET S-505.
9. FOR COMPOSITE FENDER PILES, REFER TO SHEET S-506.
10. FOR TYPICAL EXPANSION JOINT, CONSTRUCTION JOINT, AND SEAWALL CORNER DETAILS, REFER TO SHEET S-502.

TABULATED NEW WORK QUANTITIES (THIS SHEET)

SYMBOL	ITEM	QUANTITY	UNIT
OR	CONCRETE FENDER PILE	–	EA
	COMPOSITE FENDER PILE	–	EA
	42" CLEAT	–	EA
	24" CLEAT	–	EA
	LADDER	–	EA
	TIMBER WALE WITH BLOCKING	–	LF
	TIMBER CHOCK WITH SPACERS	–	LF
	GROUT CURTAIN	21	LF
	CHAIN / POSTS	100/14	LF/EA

NOTE: ALL NEW WORK DIMENSIONS ARE APPROXIMATE AND REPRESENT THE OVERALL EXTENT OF WORK REQUIRED AT THAT LOCATION. REFER TO TYPICAL SECTIONS/DETAILS AND REFERENCE DRAWINGS FOR ADDITIONAL INFORMATION.

KEY PLAN

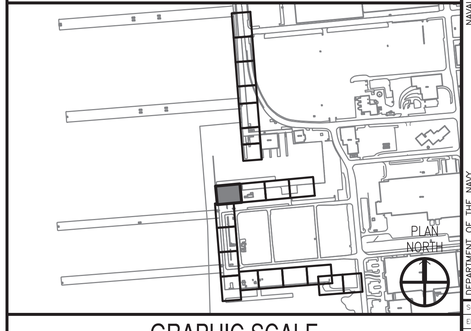

GRAPHIC SCALE

1"=10' 0' 10' 20'

SYM	DESCRIPTION	DATE	APPR.
1	REMOVE WATER LEVEL WARNINGS	8/12/2016	KAD

NAVFAC

SEAL

A/E INFO

APPROVED

FOR COMMANDER NAVFAC 8-11-16

ACTIVITY DAVE SEARS

SATISFACTORY TO DATE 6/17/2016

DES ELT DRW KAD CHK CLT

DESIGN MANAGER EDDY THEISZ

BRANCH MANAGER CJT

CHIEF ENGINEER J. HASTE, P.E.

FIRE PROTECTION

DEPARTMENT OF THE NAVY
NAVAL FACILITIES ENGINEERING COMMAND
HAMPTON ROADS IPT – PWD NORFOLK
NAVAL FACILITIES ENGINEERING COMMAND–MID-ATLANTIC
NORFOLK NAVAL STATION
NORFOLK NAVAL STATION, NORFOLK, VIRGINIA

CEP-175 AND Z-308 BULKHEAD REPAIR

STRUCTURAL PLAN & ELEV (11 OF 21)

SCALE: AS NOTED

EPROJECT NO. 1370817

CONSTR. CONTR. NO. N/A

NAVFAC DRAWING NO. 12,729,754

SHEET 99 OF 158

S-111

DRAWFORM REVISION: 10 MARCH 2009

FILE NAME: P:\VA\NavalStationNorfolk\Waterfront\Bulkheads\2015_1370817_CEP-1752-Z308Report\B_Design\Drawings\Sheet\07_Structural\1370817_S-100 SERIES.dwg LAYOUT NAME: S-111 STRUCTURAL PLAN & ELEV (11 OF 21) PLOTTED: Wednesday, August 10, 2016 – 11:44am USER: christine.rukowski

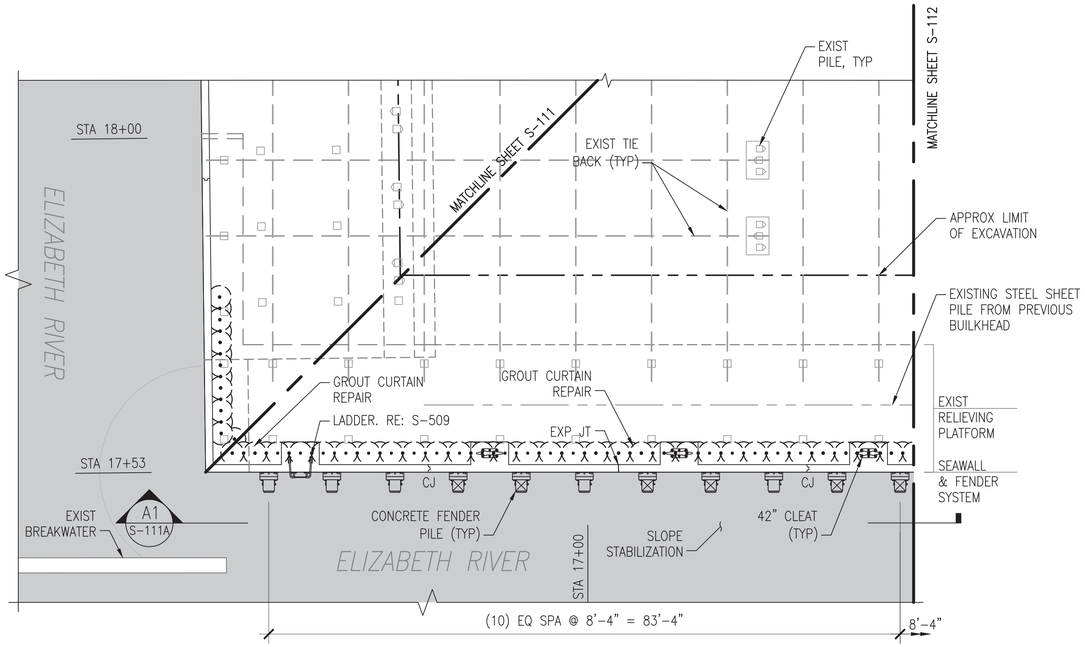

C1 PLAN - CEP-175 BULKHEAD - WEST FACE (1 OF 5)

SCALE: 1" = 10'

NORTH

S-004

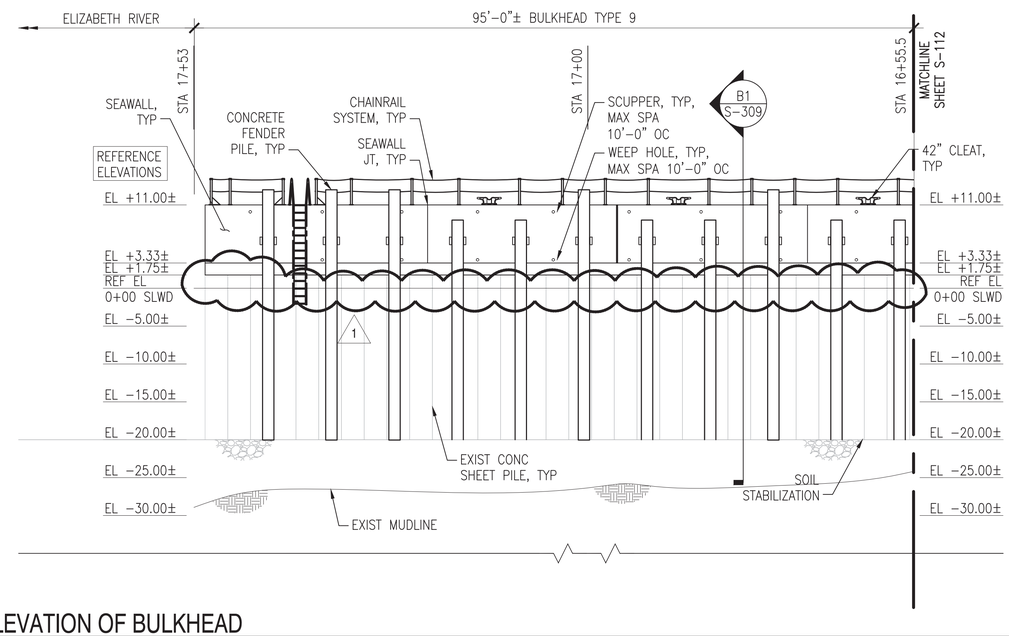

A1 ELEVATION OF BULKHEAD

SCALE: 1" = 10'

S-111A

GENERAL SHEET NOTES @ CEP-175

1. PROVIDE CEP-175 BULKHEAD FENDER SYSTEM COMPLETE, TO INCLUDE, BUT NOT LIMITED TO, PRESTRESSED CONCRTE FENDER PILES (WEST FACE), COMPOSITE PILES (NORTH AND SOUTH FACES), CHOCKS, WALES, BLOCKING, WELDMENTS, AND SPACERS.
2. PROVIDE CEP-175 BULKHEAD SEAWALL SYSTEM COMPLETE, TO INCLUDE, BUT NOT LIMITED TO, SEAWALL, CURBING, CLEATS, AND LADDERS.
3. PROVIDE JET-GROUTED SOIL CURTAIN WALL REPAIRS BEHIND THE BULKHEAD AS SHOWN ON THE PLANS.
4. PROVIDE ADDITIONAL RIP RAP MATERIAL OVERLAY FOR SHIP PILE TOE STABILIZATION AS SHOWN ON THE PLANS, SECTIONS, AND DETAILS.
5. PROVIDE CHAINRAIL SYSTEM COMPLETE, TO INCLUDE, BUT NOT LIMITED TO, CHAIN, POSTS, ANCHORS, AND FOUNDATIONS. NOTE: POST SPACING IS 8'-0" MAX, BUT SHALL ADJUST AT CLEAT LOCATIONS, TO ENSURE CLEATS ARE CENTERED BETWEEN POSTS. CHAINRAIL SYSTEM SHALL BE ON THE WEST SIDE OF CEP-175 AND EXTEND AROUND THE CORNERS OF THE NORTH AND SOUTH SIDES OF CEP-175 APPROXIMATELY 100'-0". REFER TO DETAILS ON S-507.
6. MUDLINE INFORMATION IS BASED UPON NAVFAC HYDROLOGICAL SURVEY DATA FROM JANUARY 2015 AND IS PROVIDED FOR REFERENCE ONLY.
7. ELEVATIONS SHOWN ON THE SD SERIES DRAWINGS ARE NOTED AS REFERENCE ELEVATIONS, AND CORRESPOND TO THE PROVIDED AS-BUILT DRAWINGS FOR THE BULKHEAD. CONTRACTOR SHALL SET UP TEMPORARY BENCHMARKS AND COORDINATE REAL TIME ELEVATIONS WITH CIVIL DRAWINGS AND DATUM PROVIDED ON G-002.
8. FOR CONCRETE FENDER PILES, REFER TO SHEET S-505.
9. FOR COMPOSITE FENDER PILES, REFER TO SHEET S-506.
10. FOR TYPICAL EXPANSION JOINT, CONSTRUCTION JOINT, AND SEAWALL CORNER DETAILS, REFER TO SHEET S-502.

TABULATED NEW WORK QUANTITIES (THIS SHEET)

SYMBOL	ITEM	QUANTITY	UNIT
OR	CONCRETE FENDER PILE	11	EA
	COMPOSITE FENDER PILE	–	EA
	42" CLEAT	3	EA
	24" CLEAT	–	EA
	LADDER	1	EA
	TIMBER WALE WITH BLOCKING	–	LF
	TIMBER CHOCK WITH SPACERS	–	LF
	GROUT CURTAIN	93	LF
	CHAIN / POSTS	95/16	LF/EA

NOTE: ALL NEW WORK DIMENSIONS ARE APPROXIMATE AND REPRESENT THE OVERALL EXTENT OF WORK REQUIRED AT THAT LOCATION. REFER TO TYPICAL SECTIONS/DETAILS AND REFERENCE DRAWINGS FOR ADDITIONAL INFORMATION.

KEY PLAN

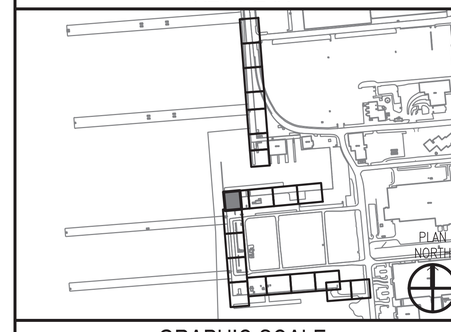

GRAPHIC SCALE

1"=10' 0' 10' 20'

SYM	DESCRIPTION	DATE	APPR.
1	REMOVE WATER LEVEL WARNINGS	8/12/2016	KAD

NAVFAC

SEAL

A/E INFO

APPROVED

FOR COMMANDER NAVFAC 8-11-16

ACTIVITY DAVE SEARS

SATISFACTORY TO DATE 6/17/2016

DES ELT DRW KAD CHK CLT

DESIGN MANAGER EDDY THEISZ

BRANCH MANAGER CAT

CHIEF ENGINEER J. HASTE, P.E.

FIRE PROTECTION

DEPARTMENT OF THE NAVY
NAVAL FACILITIES ENGINEERING COMMAND
HAMPTON ROADS IPT – PWD NORFOLK
NAVAL FACILITIES ENGINEERING COMMAND–MID-ATLANTIC
NORFOLK NAVAL STATION
NORFOLK NAVAL STATION, VIRGINIA

CEP-175 AND Z-308 BULKHEAD REPAIR

STRUCTURAL PLAN & ELEV (11A OF 21)

SCALE: AS NOTED

EPROJECT NO. 1370817

CONSTR. CONTR. NO. N/A

NAVFAC DRAWING NO. 12,729,755

SHEET 100 OF 158

S-111A

DRAWFORM REVISION: 10 MARCH 2009

FILE NAME: P:\VA\NavalStationNorfolk\Waterfront\Bulkheads\2015_1370817_CEP-1752-308Repair\B_Design\Drawings\Sheet\01_Structural\1370817_S-100 SERIES.dwg LAYOUT NAME: S-111A STRUCTURAL PLAN & ELEV (11A OF 21) PLOTTED: Wednesday, August 10, 2016 – 11:44am USER: christine.rutkowski

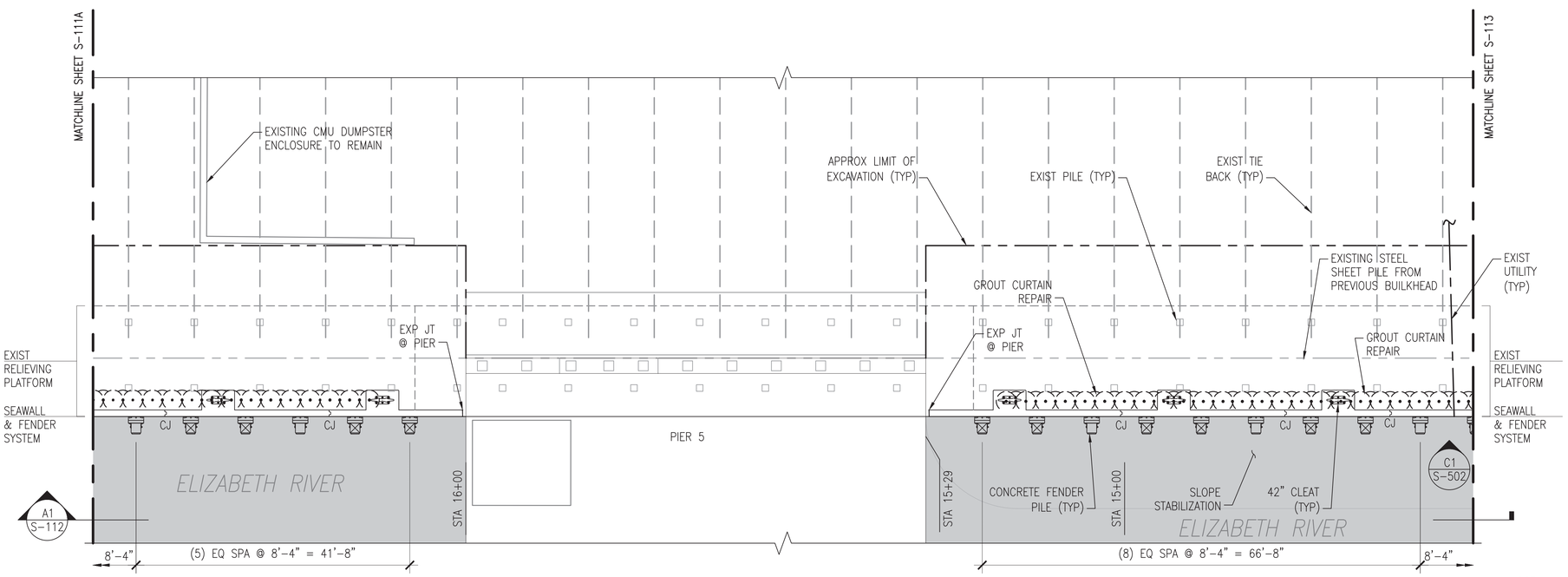

C1 PLAN - CEP-175 BULKHEAD - WEST FACE (2 OF 5)

SCALE: 1" = 10'

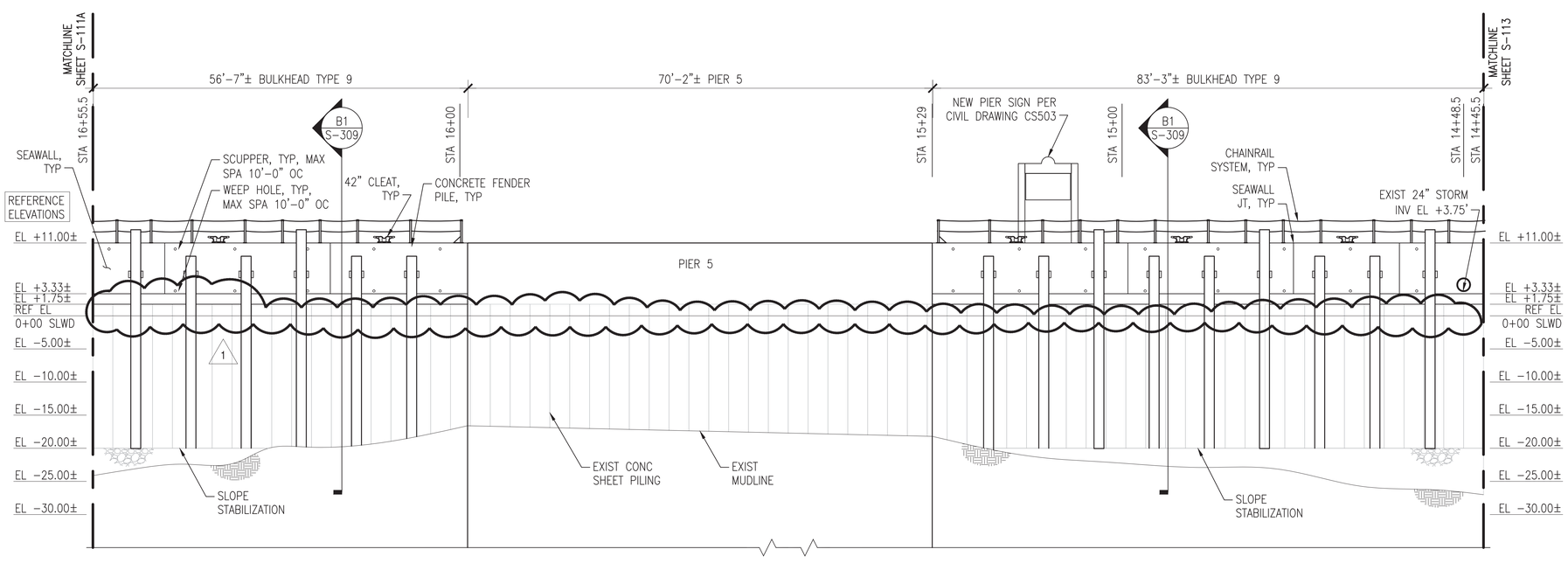

A1 ELEVATION OF BULKHEAD

SCALE: 1" = 10'

S-112

GENERAL SHEET NOTES @ CEP-175

1. PROVIDE CEP-175 BULKHEAD FENDER SYSTEM COMPLETE, TO INCLUDE, BUT NOT LIMITED TO, PRESTRESSED CONCRTE FENDER PILES (WEST FACE), COMPOSITE PILES (NORTH AND SOUTH FACES), CHOCKS, WALES, BLOCKING, WELDMENTS, AND SPACERS.
2. PROVIDE CEP-175 BULKHEAD SEAWALL SYSTEM COMPLETE, TO INCLUDE, BUT NOT LIMITED TO, SEAWALL, CURBING, CLEATS, AND LADDERS.
3. PROVIDE JET-GROUTED SOIL CURTAIN WALL REPAIRS BEHIND THE BULKHEAD AS SHOWN ON THE PLANS.
4. PROVIDE ADDITIONAL RIP RAP MATERIAL OVERLAY FOR SHIP PILE TOE STABILIZATION AS SHOWN ON THE PLANS, SECTIONS, AND DETAILS.
5. PROVIDE CHAINRAIL SYSTEM COMPLETE, TO INCLUDE, BUT NOT LIMITED TO, CHAIN, POSTS, ANCHORS, AND FOUNDATIONS. NOTE: POST SPACING IS 8'-0" MAX, BUT SHALL ADJUST AT CLEAT LOCATIONS, TO ENSURE CLEATS ARE CENTERED BETWEEN POSTS. CHAINRAIL SYSTEM SHALL BE ON THE WEST SIDE OF CEP-175 AND EXTEND AROUND THE CORNERS OF THE NORTH AND SOUTH SIDES OF CEP-175 APPROXIMATELY 100'-0". REFER TO DETAILS ON S-507.
6. MUDLINE INFORMATION IS BASED UPON NAVFAC HYDROLOGICAL SURVEY DATA FROM JANUARY 2015 AND IS PROVIDED FOR REFERENCE ONLY.
7. ELEVATIONS SHOWN ON THE SD SERIES DRAWINGS ARE NOTED AS REFERENCE ELEVATIONS, AND CORRESPOND TO THE PROVIDED AS-BUILT DRAWINGS FOR THE BULKHEAD. CONTRACTOR SHALL SET UP TEMPORARY BENCHMARKS AND COORDINATE REAL TIME ELEVATIONS WITH CIVIL DRAWINGS AND DATUM PROVIDED ON G-002.
8. FOR CONCRETE FENDER PILES, REFER TO SHEET S-505.
9. FOR COMPOSITE FENDER PILES, REFER TO SHEET S-506.
10. FOR TYPICAL EXPANSION JOINT, CONSTRUCTION JOINT, AND SEAWALL CORNER DETAILS, REFER TO SHEET S-502.

TABULATED NEW WORK QUANTITIES (THIS SHEET)

SYMBOL	ITEM	QUANTITY	UNIT
OR	CONCRETE FENDER PILE	15	EA
	COMPOSITE FENDER PILE	–	EA
	42" CLEAT	5	EA
	24" CLEAT	–	EA
	LADDER	–	EA
	TIMBER WALE WITH BLOCKING	–	LF
	TIMBER CHOCK WITH SPACERS	–	LF
	GROUT CURTAIN	120	LF
	CHAIN / POSTS	140/22	LF/EA

NOTE: ALL NEW WORK DIMENSIONS ARE APPROXIMATE AND REPRESENT THE OVERALL EXTENT OF WORK REQUIRED AT THAT LOCATION. REFER TO TYPICAL SECTIONS/DETAILS AND REFERENCE DRAWINGS FOR ADDITIONAL INFORMATION.

KEY PLAN

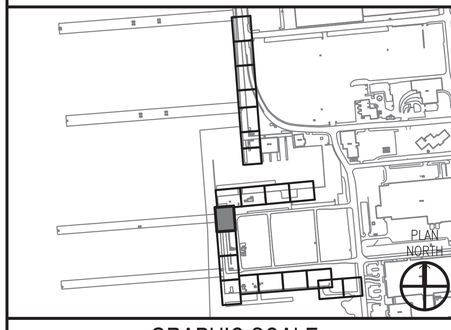

GRAPHIC SCALE

1"=10' 0' 10' 20'

SYM	DESCRIPTION	DATE	APPR.
1	REMOVE WATER LEVEL WARNINGS	8/12/2016	KAD

NAVFAC

SEAL

A/E INFO

APPROVED

FOR COMMANDER NAVFAC 8-11-16

ACTIVITY DAVE SEARS

SATISFACTORY TO DATE 6/17/2016

DES ELT DRW KAD CHK CLT

DESIGN MANAGER EDDY THEISZ

BRANCH MANAGER CRT

CHIEF ENGINEER J. HASTE, P.E.

FIRE PROTECTION

DEPARTMENT OF THE NAVY
NAVAL FACILITIES ENGINEERING COMMAND
NAVAL FACILITIES ENGINEERING COMMAND-MID-ATLANTIC
HAMPTON ROADS IPT - PWD NORFOLK
NORFOLK NAVAL STATION
NORFOLK NAVAL STATION
NORFOLK, VIRGINIA

CEP-175 AND Z-308 BULKHEAD REPAIR

STRUCTURAL PLAN & ELEV (12 OF 21)

SCALE: AS NOTED

EPROJECT NO. 1370817

CONSTR. CONTR. NO. N/A

NAVFAC DRAWING NO. 12,729,756

SHEET 101 OF 158

S-112

DRAWFORM REVISION: 10 MARCH 2009

FILE NAME: P:\VA\NavalStationNorfolk\Waterfront\Bulkheads\2015_1370817_CEP-1752-308Repair\B_Design\Drawings\Sheet\07_Structural\1370817_S-100 SERIES.dwg LAYOUT NAME: S-112 STRUCTURAL PLAN & ELEV (12 OF 21) PLOTTED: Wednesday, August 10, 2016 - 11:44am USER: christine.rukowski

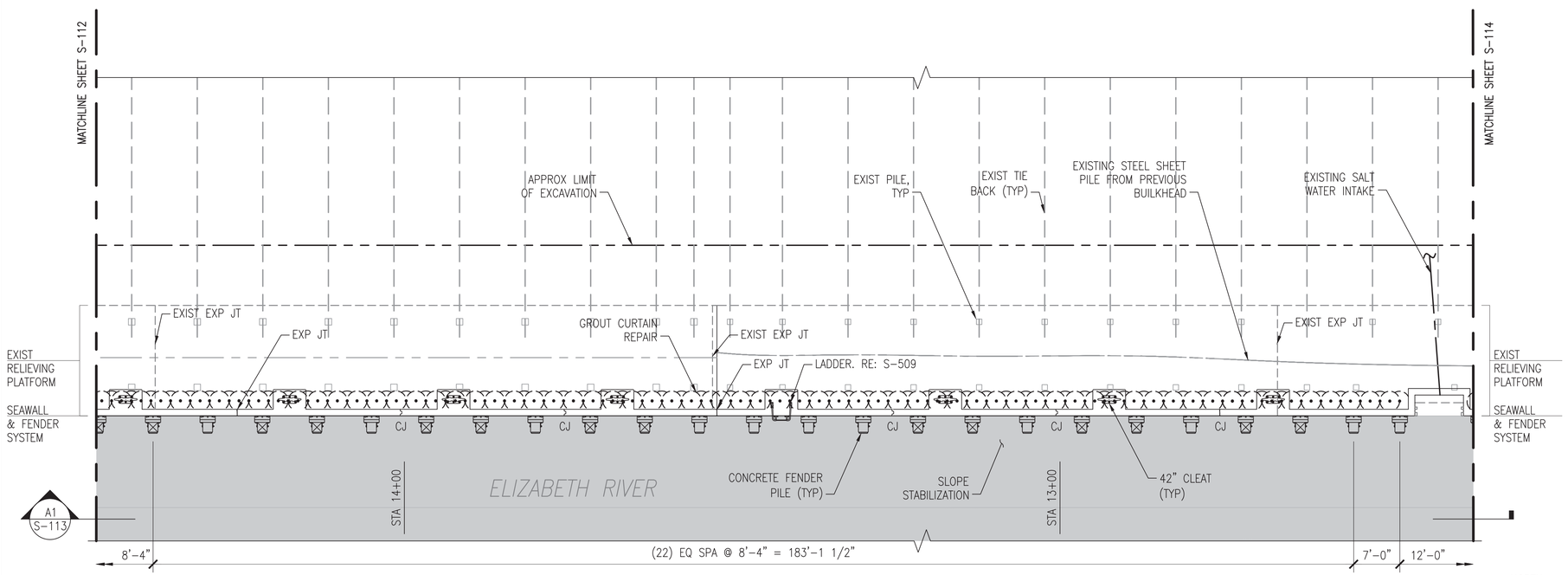

C1 PLAN - CEP-175 BULKHEAD - WEST FACE (3 OF 5)

SCALE: 1" = 10'

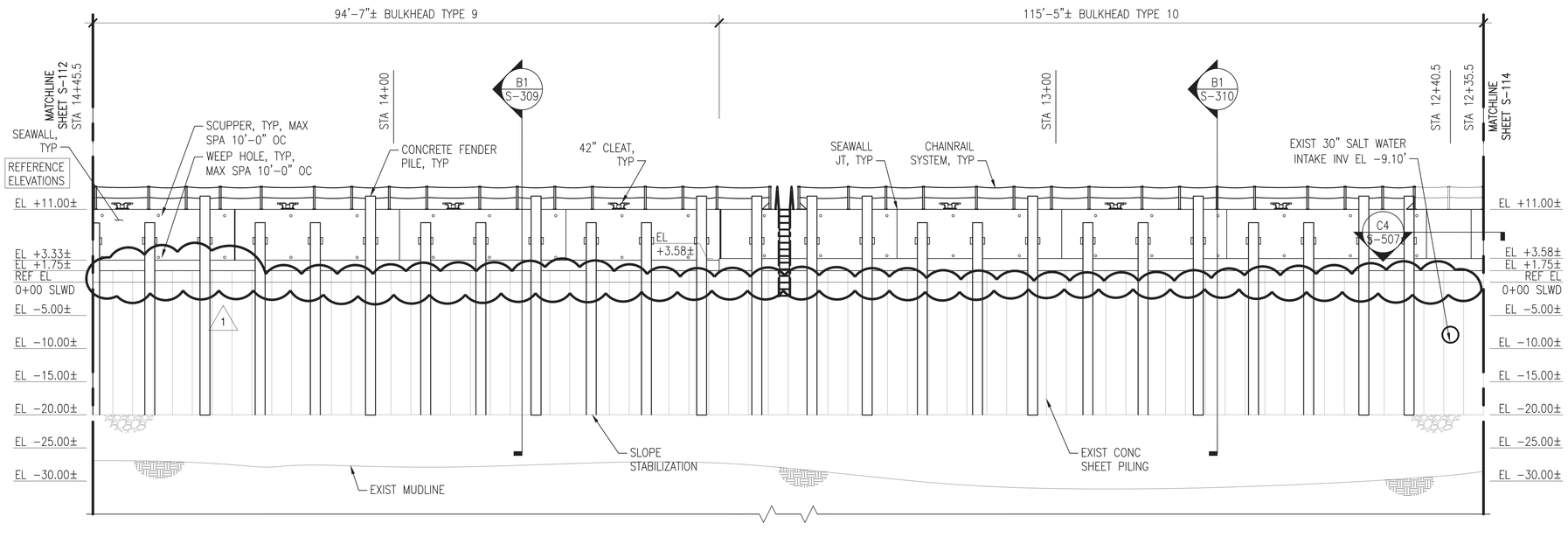

A1 ELEVATION OF BULKHEAD

SCALE: 1" = 10'

S-113

GENERAL SHEET NOTES @ CEP-175

1. PROVIDE CEP-175 BULKHEAD FENDER SYSTEM COMPLETE, TO INCLUDE, BUT NOT LIMITED TO, PRESTRESSED CONCRTE FENDER PILES (WEST FACE), COMPOSITE PILES (NORTH AND SOUTH FACES), CHOCKS, WALES, BLOCKING, WELDMENTS, AND SPACERS.
2. PROVIDE CEP-175 BULKHEAD SEAWALL SYSTEM COMPLETE, TO INCLUDE, BUT NOT LIMITED TO, SEAWALL, CURBING, CLEATS, AND LADDERS.
3. PROVIDE JET-GROUTED SOIL CURTAIN WALL REPAIRS BEHIND THE BULKHEAD AS SHOWN ON THE PLANS.
4. PROVIDE ADDITIONAL RIP RAP MATERIAL OVERLAY FOR SHIP PILE TOE STABILIZATION AS SHOWN ON THE PLANS, SECTIONS, AND DETAILS.
5. PROVIDE CHAINRAIL SYSTEM COMPLETE, TO INCLUDE, BUT NOT LIMITED TO, CHAIN, POSTS, ANCHORS, AND FOUNDATIONS. NOTE: POST SPACING IS 8'-0" MAX, BUT SHALL ADJUST AT CLEAT LOCATIONS, TO ENSURE CLEATS ARE CENTERED BETWEEN POSTS. CHAINRAIL SYSTEM SHALL BE ON THE WEST SIDE OF CEP-175 AND EXTEND AROUND THE CORNERS OF THE NORTH AND SOUTH SIDES OF CEP-175 APPROXIMATELY 100'-0". REFER TO DETAILS ON S-507.
6. MUDLINE INFORMATION IS BASED UPON NAVFAC HYDROLOGICAL SURVEY DATA FROM JANUARY 2015 AND IS PROVIDED FOR REFERENCE ONLY.
7. ELEVATIONS SHOWN ON THE SD SERIES DRAWINGS ARE NOTED AS REFERENCE ELEVATIONS, AND CORRESPOND TO THE PROVIDED AS-BUILT DRAWINGS FOR THE BULKHEAD. CONTRACTOR SHALL SET UP TEMPORARY BENCHMARKS AND COORDINATE REAL TIME ELEVATIONS WITH CIVIL DRAWINGS AND DATUM PROVIDED ON G-002.
8. FOR CONCRETE FENDER PILES, REFER TO SHEET S-505.
9. FOR COMPOSITE FENDER PILES, REFER TO SHEET S-506.
10. FOR TYPICAL EXPANSION JOINT, CONSTRUCTION JOINT, AND SEAWALL CORNER DETAILS, REFER TO SHEET S-502.

TABULATED NEW WORK QUANTITIES (THIS SHEET)

SYMBOL	ITEM	QUANTITY	UNIT
OR	CONCRETE FENDER PILE	25	EA
	COMPOSITE FENDER PILE	–	EA
	42" CLEAT	7	EA
	24" CLEAT	–	EA
	LADDER	1	EA
	TIMBER WALE WITH BLOCKING	–	LF
	TIMBER CHOCK WITH SPACERS	–	LF
	GROUT CURTAIN	201	LF
	CHAIN / POSTS	210/37	LF/EA

NOTE: ALL NEW WORK DIMENSIONS ARE APPROXIMATE AND REPRESENT THE OVERALL EXTENT OF WORK REQUIRED AT THAT LOCATION. REFER TO TYPICAL SECTIONS/DETAILS AND REFERENCE DRAWINGS FOR ADDITIONAL INFORMATION.

KEY PLAN

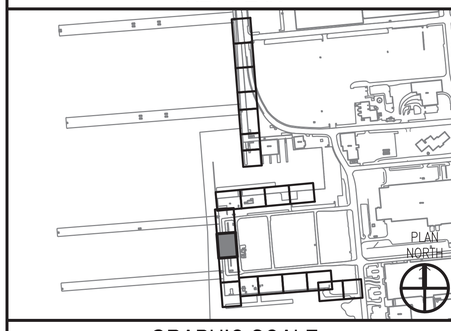

GRAPHIC SCALE

1"=10' 0' 10' 20'

SYM	DESCRIPTION	DATE	APPR.
	REMOVE WATER LEVEL WARNINGS	8/12/2016	KAD

A/E INFO

APPROVED

FOR COMMANDER NAVFAC 8-11-16

ACTIVITY DAVE SEARS

SATISFACTORY TO DATE 6/17/2016

DES ELT DRW KAD CHK CLT

DESIGN MANAGER EDDY THEISZ

BRANCH MANAGER CAT

CHIEF ENGINEER J. HASTE, P.E.

FIRE PROTECTION

DEPARTMENT OF THE NAVY
NAVAL FACILITIES ENGINEERING COMMAND
HAMPTON ROADS IPT - PWD NORFOLK
NAVAL FACILITIES ENGINEERING COMMAND-MID-ATLANTIC
NORFOLK NAVAL STATION
NORFOLK NAVAL STATION
NORFOLK, VIRGINIA

CEP-175 AND Z-308 BULKHEAD REPAIR

STRUCTURAL PLAN & ELEV (13 OF 21)

SCALE: AS NOTED

EPROJECT NO. 1370817

CONSTR. CONTR. NO. N/A

NAVFAC DRAWING NO. 12,729,757

SHEET 102 OF 158

S-113

DRAWFORM REVISION: 10 MARCH 2009

FILE NAME: P:\VA\NavalStationNorfolk\Waterfront\Bulkheads\2015_1370817_CEP-1752-308Repair\B_Design\Drawings\Sheet\07_Structural\1370817_S-100 SERIES.dwg LAYOUT NAME: S-113 STRUCTURAL PLAN & ELEV (13 OF 21) PLOTTED: Wednesday, August 10, 2016 - 11:44am USER: christine.rukowski

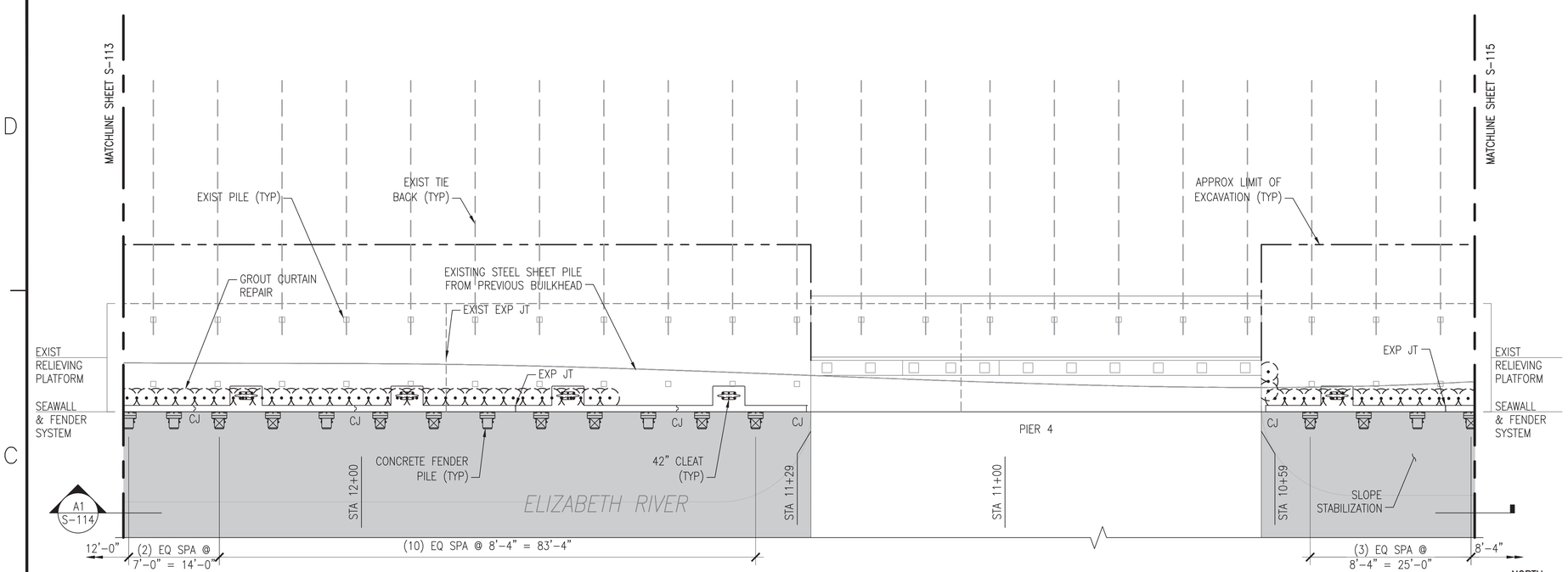

C1 PLAN - CEP-175 BULKHEAD - WEST FACE (4 OF 5)

SCALE: 1" = 10'

NORTH

S-004

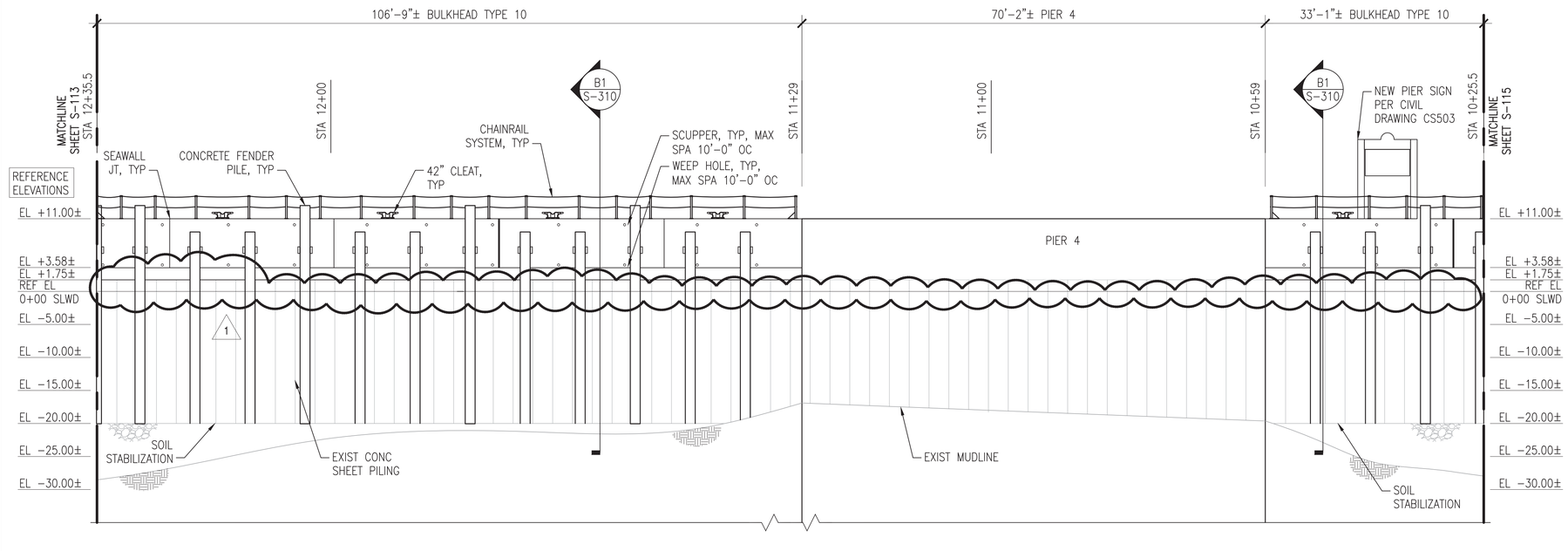

A1 ELEVATION OF BULKHEAD

SCALE: 1" = 10'

S-114

GENERAL SHEET NOTES @ CEP-175

1. PROVIDE CEP-175 BULKHEAD FENDER SYSTEM COMPLETE, TO INCLUDE, BUT NOT LIMITED TO, PRESTRESSED CONCRTE FENDER PILES (WEST FACE), COMPOSITE PILES (NORTH AND SOUTH FACES), CHOCKS, WALES, BLOCKING, WELDMENTS, AND SPACERS.
2. PROVIDE CEP-175 BULKHEAD SEAWALL SYSTEM COMPLETE, TO INCLUDE, BUT NOT LIMITED TO, SEAWALL, CURBING, CLEATS, AND LADDERS.
3. PROVIDE JET-GROUTED SOIL CURTAIN WALL REPAIRS BEHIND THE BULKHEAD AS SHOWN ON THE PLANS.
4. PROVIDE ADDITIONAL RIP RAP MATERIAL OVERLAY FOR SHIP PILE TOE STABILIZATION AS SHOWN ON THE PLANS, SECTIONS, AND DETAILS.
5. PROVIDE CHAINRAIL SYSTEM COMPLETE, TO INCLUDE, BUT NOT LIMITED TO, CHAIN, POSTS, ANCHORS, AND FOUNDATIONS. NOTE: POST SPACING IS 8'-0" MAX, BUT SHALL ADJUST AT CLEAT LOCATIONS, TO ENSURE CLEATS ARE CENTERED BETWEEN POSTS. CHAINRAIL SYSTEM SHALL BE ON THE WEST SIDE OF CEP-175 AND EXTEND AROUND THE CORNERS OF THE NORTH AND SOUTH SIDES OF CEP-175 APPROXIMATELY 100'-0". REFER TO DETAILS ON S-507.
6. MUDLINE INFORMATION IS BASED UPON NAVFAC HYDROLOGICAL SURVEY DATA FROM JANUARY 2015 AND IS PROVIDED FOR REFERENCE ONLY.
7. ELEVATIONS SHOWN ON THE SD SERIES DRAWINGS ARE NOTED AS REFERENCE ELEVATIONS, AND CORRESPOND TO THE PROVIDED AS-BUILT DRAWINGS FOR THE BULKHEAD. CONTRACTOR SHALL SET UP TEMPORARY BENCHMARKS AND COORDINATE REAL TIME ELEVATIONS WITH CIVIL DRAWINGS AND DATUM PROVIDED ON G-002.
8. FOR CONCRETE FENDER PILES, REFER TO SHEET S-505.
9. FOR COMPOSITE FENDER PILES, REFER TO SHEET S-506.
10. FOR TYPICAL EXPANSION JOINT, CONSTRUCTION JOINT, AND SEAWALL CORNER DETAILS, REFER TO SHEET S-502.

TABULATED NEW WORK QUANTITIES (THIS SHEET)

SYMBOL	ITEM	QUANTITY	UNIT
OR	CONCRETE FENDER PILE	17	EA
	COMPOSITE FENDER PILE	–	EA
	42" CLEAT	5	EA
	24" CLEAT	–	EA
	LADDER	–	EA
	TIMBER WALE WITH BLOCKING	–	LF
	TIMBER CHOCK WITH SPACERS	–	LF
(·)(·)(·)	GROUT CURTAIN	117	LF
	CHAIN / POSTS	140/23	LF/EA

NOTE: ALL NEW WORK DIMENSIONS ARE APPROXIMATE AND REPRESENT THE OVERALL EXTENT OF WORK REQUIRED AT THAT LOCATION. REFER TO TYPICAL SECTIONS/DETAILS AND REFERENCE DRAWINGS FOR ADDITIONAL INFORMATION.

KEY PLAN

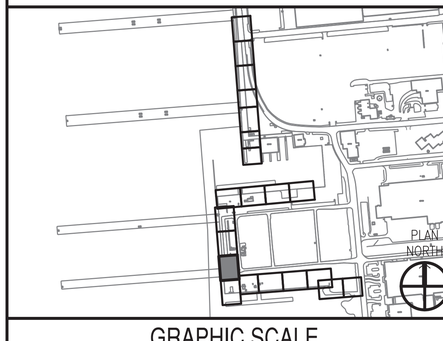

GRAPHIC SCALE

1"=10' 0' 10' 20'

SYM	DESCRIPTION	DATE	APPR.
1	REMOVE WATER LEVEL WARNINGS	8/12/2016	KAD

SEAL

A/E INFO

APPROVED

FOR COMMANDER NAVFAC 8-11-16

ACTIVITY: DAVE SEARS

SATISFACTORY TO DATE 6/17/2016

DES ELT DFW KAD CHK CLT

DESIGN MANAGER EDDY THEISZ

BRANCH MANAGER CAT

CHIEF ENGINEER J. HASTE, P.E.

FIRE PROTECTION

DEPARTMENT OF THE NAVY
NAVAL FACILITIES ENGINEERING COMMAND
HAMPTON ROADS IPT – PWD NORFOLK

NAVAL FACILITIES ENGINEERING COMMAND–MID-ATLANTIC
NORFOLK NAVAL STATION

NORFOLK NAVAL STATION, NORFOLK, VIRGINIA

CEP-175 AND Z-308 BULKHEAD REPAIR

STRUCTURAL PLAN & ELEV (14 OF 21)

SCALE: AS NOTED

EPROJECT NO. 1370817

CONSTR. CONTR. NO. N/A

NAVFAC DRAWING NO. 12,729,758

SHEET 103 OF 158

S-114

DRAWFORM REVISION: 10 MARCH 2009

FILE NAME: P:\VA\NavalStationNorfolk\Waterfront\Bulkheads\2015_1370817_CEP-1752-308Repair\B_Design\Drawings\Sheet\01_Structural\1370817_S-100 SERIES.dwg LAYOUT NAME: S-114 STRUCTURAL PLAN & ELEV (14 OF 21) PLOTTED: Wednesday, August 10, 2016 – 11:44am USER: christine.rukowski

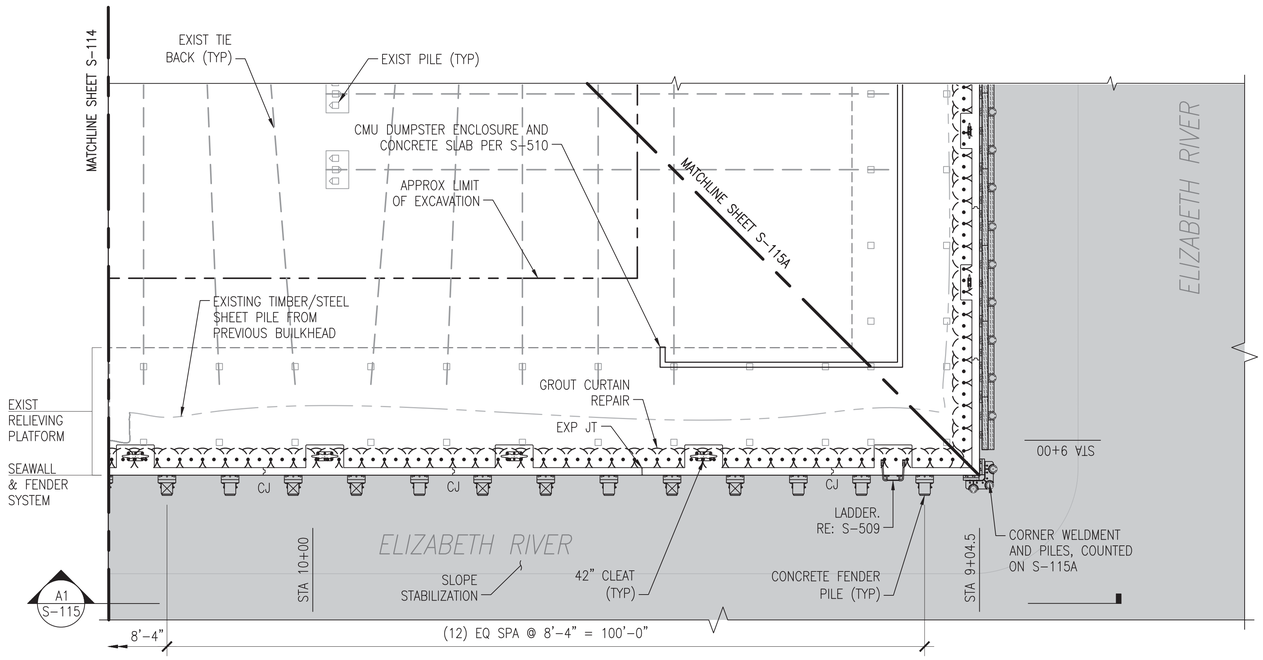

C1 PLAN - CEP-175 BULKHEAD - WEST FACE (5 OF 5)

SCALE: 1" = 10'

NORTH S-004

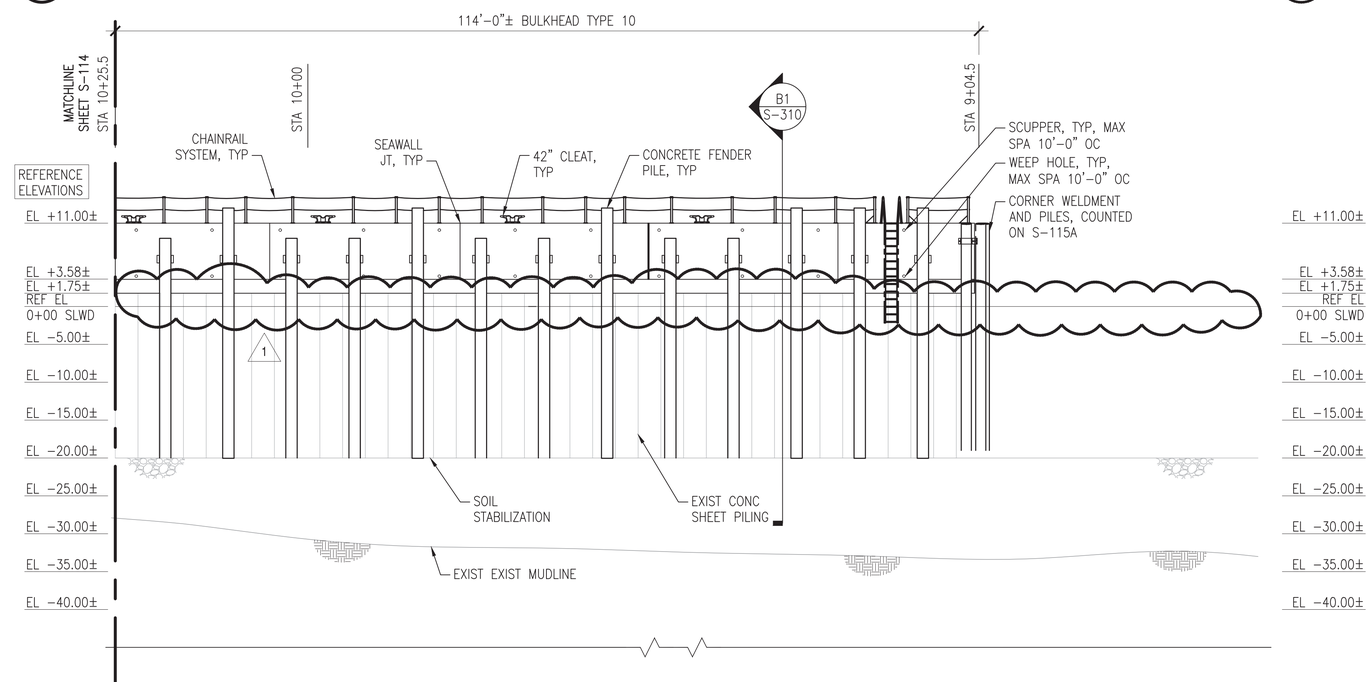

A1 ELEVATION OF BULKHEAD

SCALE: 1" = 10'

S-115

GENERAL SHEET NOTES @ CEP-175

1. PROVIDE CEP-175 BULKHEAD FENDER SYSTEM COMPLETE, TO INCLUDE, BUT NOT LIMITED TO, PRESTRESSED CONCRTE FENDER PILES (WEST FACE), COMPOSITE PILES (NORTH AND SOUTH FACES), CHOCKS, WALES, BLOCKING, WELDMENTS, AND SPACERS.
2. PROVIDE CEP-175 BULKHEAD SEAWALL SYSTEM COMPLETE, TO INCLUDE, BUT NOT LIMITED TO, SEAWALL, CURBING, CLEATS, AND LADDERS.
3. PROVIDE JET-GROUTED SOIL CURTAIN WALL REPAIRS BEHIND THE BULKHEAD AS SHOWN ON THE PLANS.
4. PROVIDE ADDITIONAL RIP RAP MATERIAL OVERLAY FOR SHIP PILE TOE STABILIZATION AS SHOWN ON THE PLANS, SECTIONS, AND DETAILS.
5. PROVIDE CHAINRAIL SYSTEM COMPLETE, TO INCLUDE, BUT NOT LIMITED TO, CHAIN, POSTS, ANCHORS, AND FOUNDATIONS. NOTE: POST SPACING IS 8'-0" MAX, BUT SHALL ADJUST AT CLEAT LOCATIONS, TO ENSURE CLEATS ARE CENTERED BETWEEN POSTS. CHAINRAIL SYSTEM SHALL BE ON THE WEST SIDE OF CEP-175 AND EXTEND AROUND THE CORNERS OF THE NORTH AND SOUTH SIDES OF CEP-175 APPROXIMATELY 100'-0". REFER TO DETAILS ON S-507.
6. MUDLINE INFORMATION IS BASED UPON NAVFAC HYDROLOGICAL SURVEY DATA FROM JANUARY 2015 AND IS PROVIDED FOR REFERENCE ONLY.
7. ELEVATIONS SHOWN ON THE SD SERIES DRAWINGS ARE NOTED AS REFERENCE ELEVATIONS, AND CORRESPOND TO THE PROVIDED AS-BUILT DRAWINGS FOR THE BULKHEAD. CONTRACTOR SHALL SET UP TEMPORARY BENCHMARKS AND COORDINATE REAL TIME ELEVATIONS WITH CIVIL DRAWINGS AND DATUM PROVIDED ON G-002.
8. FOR CONCRETE FENDER PILES, REFER TO SHEET S-505.
9. FOR COMPOSITE FENDER PILES, REFER TO SHEET S-506.
10. FOR TYPICAL EXPANSION JOINT, CONSTRUCTION JOINT, AND SEAWALL CORNER DETAILS, REFER TO SHEET S-502.

TABULATED NEW WORK QUANTITIES (THIS SHEET)

SYMBOL	ITEM	QUANTITY	UNIT
OR	CONCRETE FENDER PILE	13	EA
	COMPOSITE FENDER PILE	–	EA
	42" CLEAT	4	EA
	24" CLEAT	–	EA
	LADDER	1	EA
	TIMBER WALE WITH BLOCKING	–	LF
	TIMBER CHOCK WITH SPACERS	–	LF
	GROUT CURTAIN	114	LF
	CHAIN / POSTS	114/18	LF/EA

NOTE: ALL NEW WORK DIMENSIONS ARE APPROXIMATE AND REPRESENT THE OVERALL EXTENT OF WORK REQUIRED AT THAT LOCATION. REFER TO TYPICAL SECTIONS/DETAILS AND REFERENCE DRAWINGS FOR ADDITIONAL INFORMATION.

KEY PLAN

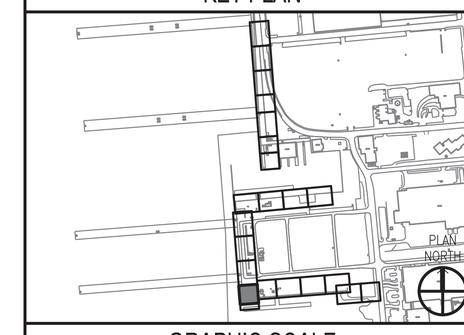

GRAPHIC SCALE

1"=10' 0' 10' 20'

SYM	DESCRIPTION	DATE	APPR.
	REMOVE WATER LEVEL WARNINGS	8/12/2016	KAD

NAVFAC

SEAL

A/E INFO

APPROVED

FOR COMMANDER NAVFAC 8-11-16

ACTIVITY DAVE SEARS

SATISFACTORY TO DATE 6/17/2016

DES ELT DRW KAD CHK CLT

DESIGN MANAGER EDDY THEISZ

BRANCH MANAGER CAT

CHIEF ENGINEER J. HASTE, P.E.

FIRE PROTECTION

DEPARTMENT OF THE NAVY
NAVAL FACILITIES ENGINEERING COMMAND
HAMPTON ROADS IPT - PWD NORFOLK
NAVAL FACILITIES ENGINEERING COMMAND-MID-ATLANTIC
NORFOLK NAVAL STATION
NORFOLK NAVAL STATION
NORFOLK, VIRGINIA

CEP-175 AND Z-308 BULKHEAD REPAIR

STRUCTURAL PLAN & ELEV (15 OF 21)

SCALE: AS NOTED

EPROJECT NO. 1370817

CONSTR. CONTR. NO. N/A

NAVFAC DRAWING NO. 12,729,759

SHEET 104 OF 158

S-115

DRAWFORM REVISION: 10 MARCH 2009

FILE NAME: P:\VA\NavalStationNorfolk\Waterfront\Bulkheads\2015_1370817_CEP-1752-308Repair\B_Design\Drawings\Sheet\07_Structural\1370817_S-100 SERIES.dwg LAYOUT NAME: S-115 STRUCTURAL PLAN & ELEV (15 OF 21) PLOTTED: Wednesday, August 10, 2016 - 11:45am USER: christine.rukowski

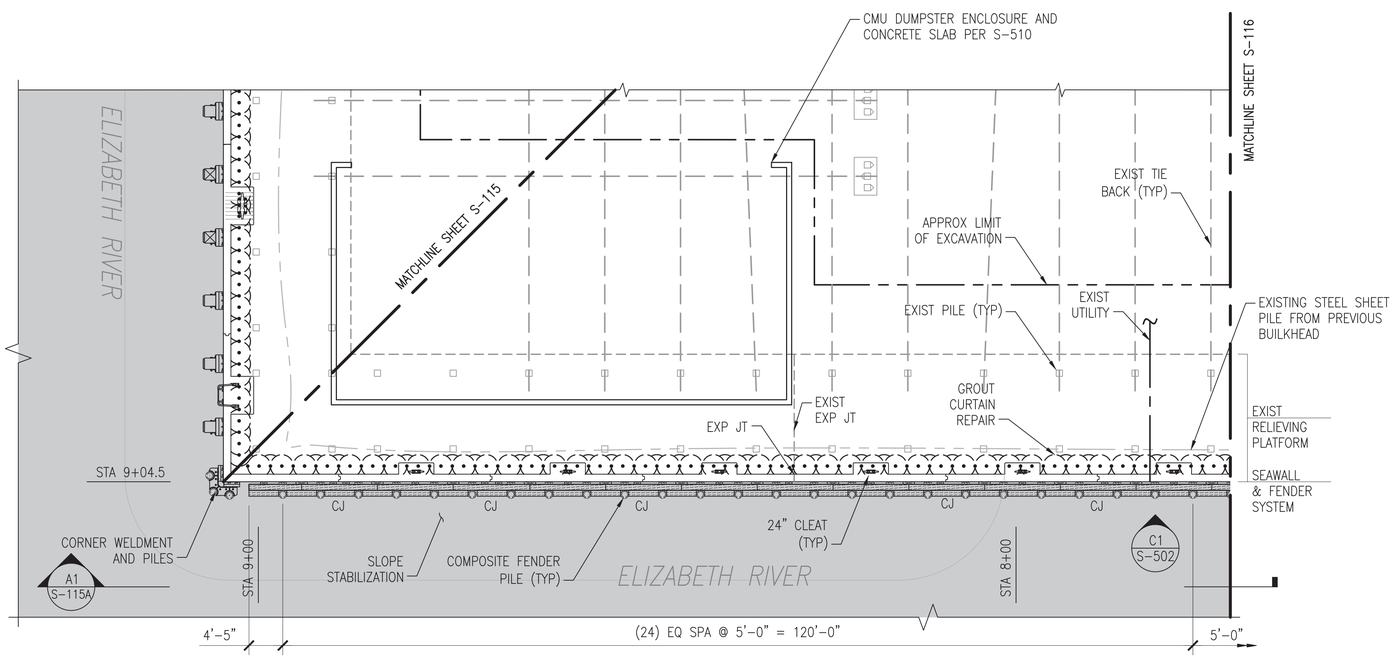

C1 PLAN - CEP-175 BULKHEAD - SOUTH FACE (1 OF 5)

SCALE: 1" = 10'

S-004

NORTH

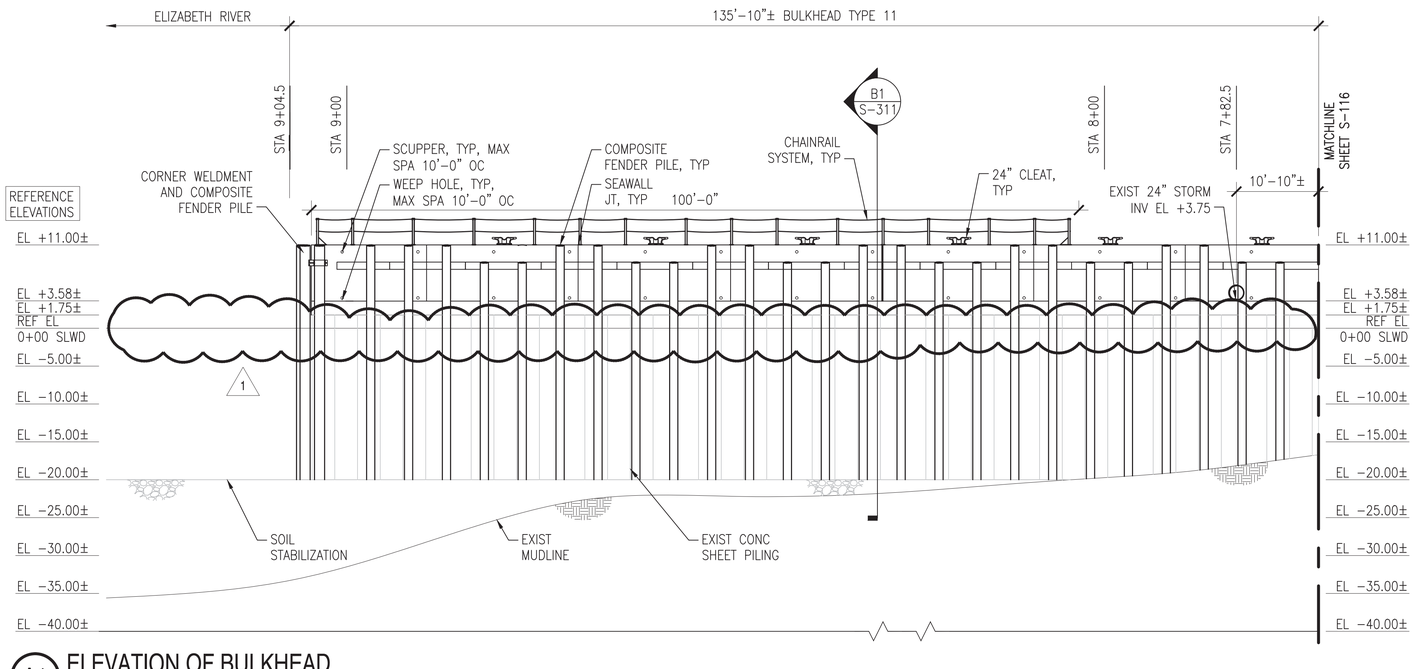

A1 ELEVATION OF BULKHEAD

SCALE: 1" = 10'

S-115A

GENERAL SHEET NOTES @ CEP-175

1. PROVIDE CEP-175 BULKHEAD FENDER SYSTEM COMPLETE, TO INCLUDE, BUT NOT LIMITED TO, PRESTRESSED CONCRTE FENDER PILES (WEST FACE), COMPOSITE PILES (NORTH AND SOUTH FACES), CHOCKS, WALES, BLOCKING, WELDMENTS, AND SPACERS.
2. PROVIDE CEP-175 BULKHEAD SEAWALL SYSTEM COMPLETE, TO INCLUDE, BUT NOT LIMITED TO, SEAWALL, CURBING, CLEATS, AND LADDERS.
3. PROVIDE JET-GROUTED SOIL CURTAIN WALL REPAIRS BEHIND THE BULKHEAD AS SHOWN ON THE PLANS.
4. PROVIDE ADDITIONAL RIP RAP MATERIAL OVERLAY FOR SHIP PILE TOE STABILIZATION AS SHOWN ON THE PLANS, SECTIONS, AND DETAILS.
5. PROVIDE CHAINRAIL SYSTEM COMPLETE, TO INCLUDE, BUT NOT LIMITED TO, CHAIN, POSTS, ANCHORS, AND FOUNDATIONS. NOTE: POST SPACING IS 8'-0" MAX, BUT SHALL ADJUST AT CLEAT LOCATIONS, TO ENSURE CLEATS ARE CENTERED BETWEEN POSTS. CHAINRAIL SYSTEM SHALL BE ON THE WEST SIDE OF CEP-175 AND EXTEND AROUND THE CORNERS OF THE NORTH AND SOUTH SIDES OF CEP-175 APPROXIMATELY 100'-0". REFER TO DETAILS ON S-507.
6. MUDLINE INFORMATION IS BASED UPON NAVFAC HYDROLOGICAL SURVEY DATA FROM JANUARY 2015 AND IS PROVIDED FOR REFERENCE ONLY.
7. ELEVATIONS SHOWN ON THE SD SERIES DRAWINGS ARE NOTED AS REFERENCE ELEVATIONS, AND CORRESPOND TO THE PROVIDED AS-BUILT DRAWINGS FOR THE BULKHEAD. CONTRACTOR SHALL SET UP TEMPORARY BENCHMARKS AND COORDINATE REAL TIME ELEVATIONS WITH CIVIL DRAWINGS AND DATUM PROVIDED ON G-002.
8. FOR CONCRETE FENDER PILES, REFER TO SHEET S-505.
9. FOR COMPOSITE FENDER PILES, REFER TO SHEET S-506.
10. FOR TYPICAL EXPANSION JOINT, CONSTRUCTION JOINT, AND SEAWALL CORNER DETAILS, REFER TO SHEET S-502.

TABULATED NEW WORK QUANTITIES (THIS SHEET)

SYMBOL	ITEM	QUANTITY	UNIT
OR	CONCRETE FENDER PILE	–	EA
	COMPOSITE FENDER PILE	28	EA
	42" CLEAT	–	EA
	24" CLEAT	6	EA
	LADDER	–	EA
	TIMBER WALE WITH BLOCKING	132	LF
	TIMBER CHOCK WITH SPACERS	102	LF
	GROUT CURTAIN	132	LF
	CHAIN / POSTS	100/16	LF/EA

NOTE: ALL NEW WORK DIMENSIONS ARE APPROXIMATE AND REPRESENT THE OVERALL EXTENT OF WORK REQUIRED AT THAT LOCATION. REFER TO TYPICAL SECTIONS/DETAILS AND REFERENCE DRAWINGS FOR ADDITIONAL INFORMATION.

KEY PLAN

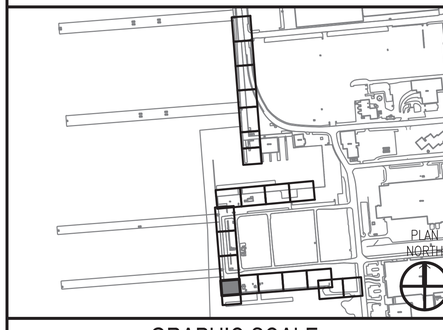

GRAPHIC SCALE

1"=10' 0' 10' 20'

SYM	DESCRIPTION	DATE	APPR.
	REMOVE WATER LEVEL WARNINGS	8/12/2016	KAD

NAVFAC

SEAL

A/E INFO

APPROVED

FOR COMMANDER NAVFAC 8-11-16

ACTIVITY DAVE SEARS

SATISFACTORY TO DATE 6/17/2016

DES ELT DRW KAD CHK CLT

DESIGN MANAGER EDDY THEISZ

BRANCH MANAGER CAT

CHIEF ENGINEER J. HASTE, P.E.

FIRE PROTECTION

DEPARTMENT OF THE NAVY
NAVAL FACILITIES ENGINEERING COMMAND
HAMPTON ROADS IPT - PWD NORFOLK
NAVAL FACILITIES ENGINEERING COMMAND-MID-ATLANTIC
NORFOLK NAVAL STATION
NORFOLK NAVAL STATION, VIRGINIA

CEP-175 AND Z-308 BULKHEAD REPAIR

STRUCTURAL PLAN & ELEV (15A OF 21)

SCALE: AS NOTED

EPROJECT NO. 1370817

CONSTR. CONTR. NO. N/A

NAVFAC DRAWING NO. 12,729,760

SHEET 105 OF 158

S-115A

DRAWFORM REVISION: 10 MARCH 2009

FILE NAME: P:\VA\NavalStationNorfolk\Waterfront\Bulkheads\2015_1370817_CEP-1752-308Repair\B_Design\Drawings\Sheet\01_Structural\1370817_S-100 SERIES.dwg LAYOUT NAME: S-115A STRUCTURAL PLAN & ELEV (15A OF 21) PLOTTED: Wednesday, August 10, 2016 - 11:45am USER: christine.rutkowski

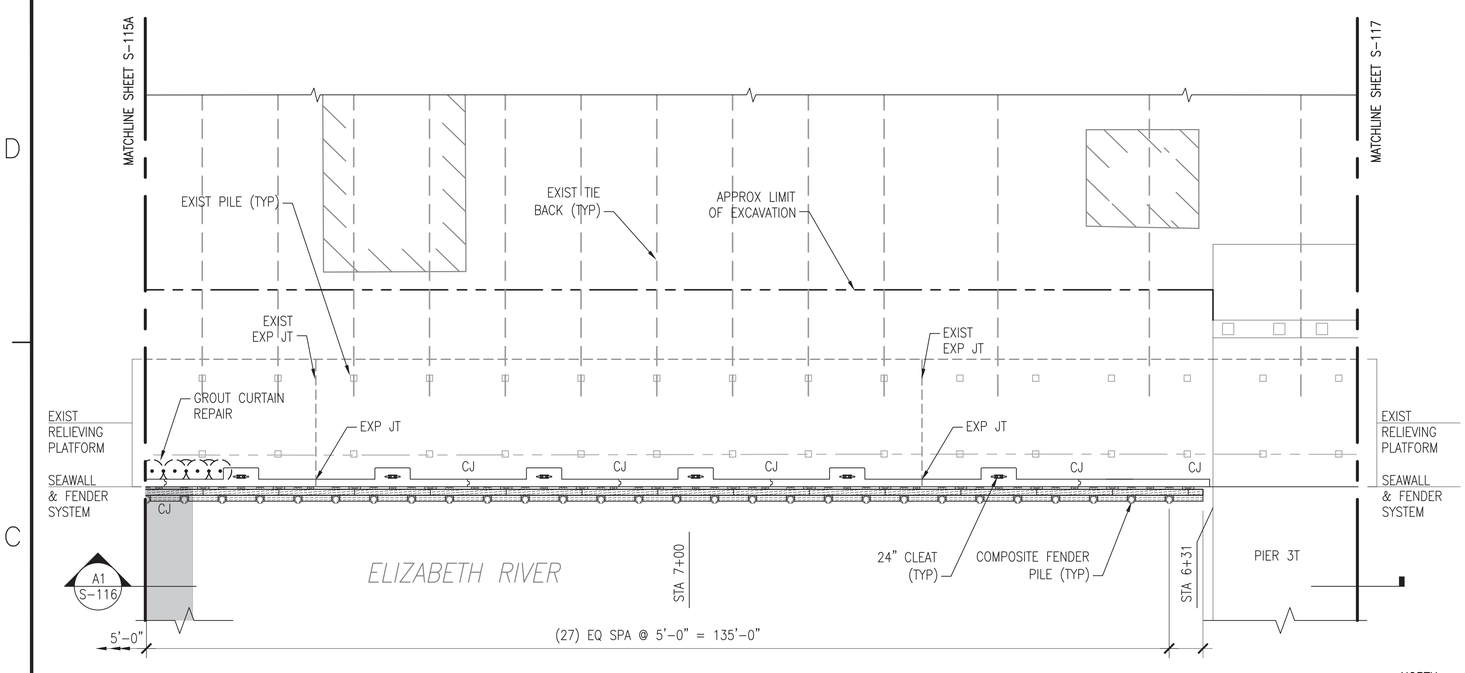

C1 PLAN - CEP-175 BULKHEAD - SOUTH FACE (2 OF 5)

SCALE: 1" = 10'

S-004

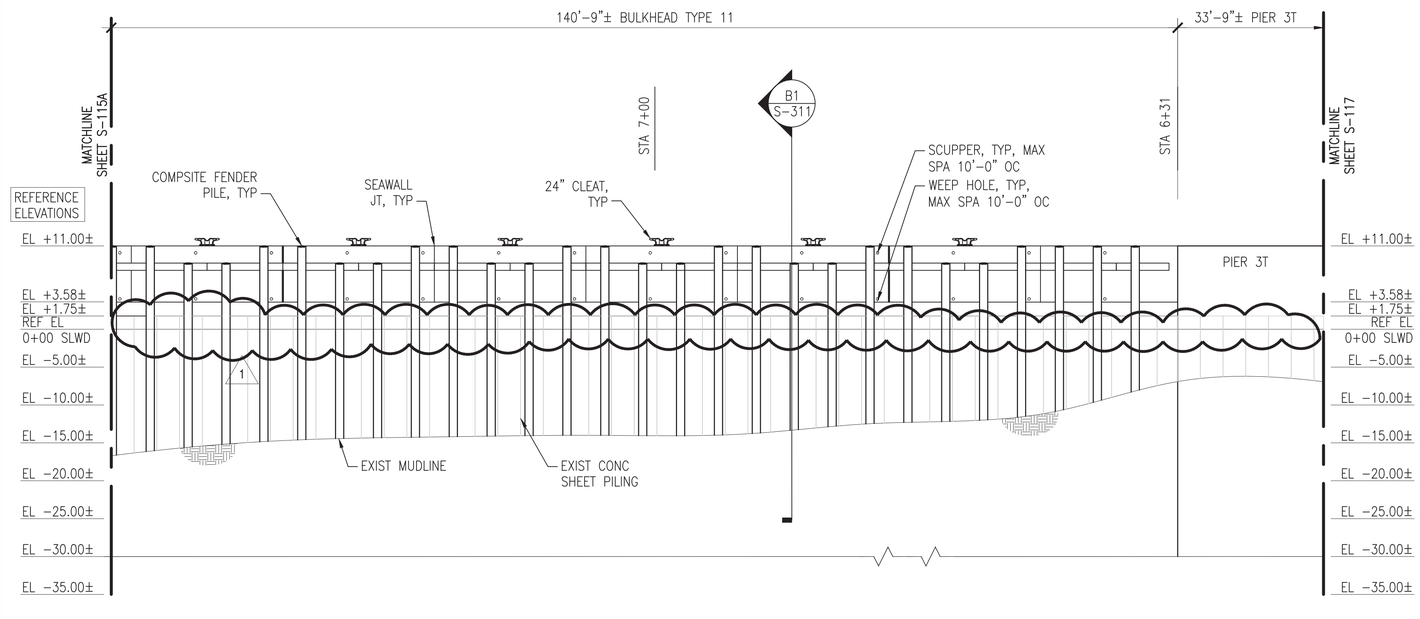

A1 ELEVATION OF BULKHEAD

SCALE: 1" = 10'

S-116

GENERAL SHEET NOTES @ CEP-175

1. PROVIDE CEP-175 BULKHEAD FENDER SYSTEM COMPLETE, TO INCLUDE, BUT NOT LIMITED TO, PRESTRESSED CONCRTE FENDER PILES (WEST FACE), COMPOSITE PILES (NORTH AND SOUTH FACES), CHOCKS, WALES, BLOCKING, WELDMENTS, AND SPACERS.
2. PROVIDE CEP-175 BULKHEAD SEAWALL SYSTEM COMPLETE, TO INCLUDE, BUT NOT LIMITED TO, SEAWALL, CURBING, CLEATS, AND LADDERS.
3. PROVIDE JET-GROUTED SOIL CURTAIN WALL REPAIRS BEHIND THE BULKHEAD AS SHOWN ON THE PLANS.
4. PROVIDE ADDITIONAL RIP RAP MATERIAL OVERLAY FOR SHIP PILE TOE STABILIZATION AS SHOWN ON THE PLANS, SECTIONS, AND DETAILS.
5. PROVIDE CHAINRAIL SYSTEM COMPLETE, TO INCLUDE, BUT NOT LIMITED TO, CHAIN, POSTS, ANCHORS, AND FOUNDATIONS. NOTE: POST SPACING IS 8'-0" MAX, BUT SHALL ADJUST AT CLEAT LOCATIONS, TO ENSURE CLEATS ARE CENTERED BETWEEN POSTS. CHAINRAIL SYSTEM SHALL BE ON THE WEST SIDE OF CEP-175 AND EXTEND AROUND THE CORNERS OF THE NORTH AND SOUTH SIDES OF CEP-175 APPROXIMATELY 100'-0". REFER TO DETAILS ON S-507.
6. MUDLINE INFORMATION IS BASED UPON NAVFAC HYDROLOGICAL SURVEY DATA FROM JANUARY 2015 AND IS PROVIDED FOR REFERENCE ONLY.
7. ELEVATIONS SHOWN ON THE SD SERIES DRAWINGS ARE NOTED AS REFERENCE ELEVATIONS, AND CORRESPOND TO THE PROVIDED AS-BUILT DRAWINGS FOR THE BULKHEAD. CONTRACTOR SHALL SET UP TEMPORARY BENCHMARKS AND COORDINATE REAL TIME ELEVATIONS WITH CIVIL DRAWINGS AND DATUM PROVIDED ON G-002.
8. FOR CONCRETE FENDER PILES, REFER TO SHEET S-505.
9. FOR COMPOSITE FENDER PILES, REFER TO SHEET S-506.
10. FOR TYPICAL EXPANSION JOINT, CONSTRUCTION JOINT, AND SEAWALL CORNER DETAILS, REFER TO SHEET S-502.

TABULATED NEW WORK QUANTITIES (THIS SHEET)

SYMBOL	ITEM	QUANTITY	UNIT
OR	CONCRETE FENDER PILE	–	EA
	COMPOSITE FENDER PILE	28	EA
	42" CLEAT	–	EA
	24" CLEAT	6	EA
	LADDER	–	EA
	TIMBER WALE WITH BLOCKING	135	LF
	TIMBER CHOCK WITH SPACERS	105	LF
	GROUT CURTAIN	12	LF
	CHAIN / POSTS	–	LF/EA

NOTE: ALL NEW WORK DIMENSIONS ARE APPROXIMATE AND REPRESENT THE OVERALL EXTENT OF WORK REQUIRED AT THAT LOCATION. REFER TO TYPICAL SECTIONS/DETAILS AND REFERENCE DRAWINGS FOR ADDITIONAL INFORMATION.

KEY PLAN

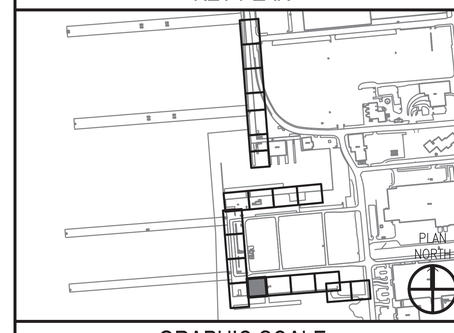

GRAPHIC SCALE

1"=10' 0' 10' 20'

SYM	DESCRIPTION	DATE	APPR.
1	REMOVE WATER LEVEL WARNINGS	8/12/2016	KAD

NAVFAC

SEAL

A/E INFO

APPROVED

FOR COMMANDER NAVFAC 8-11-16

ACTIVITY DAVE SEARS

SATISFACTORY TO DATE 6/17/2016

DES ELT DRW KAD CHK CLT

DESIGN MANAGER EDDY THEISZ

BRANCH MANAGER CRT

CHIEF ENGINEER J. HASTE, P.E.

FIRE PROTECTION

DEPARTMENT OF THE NAVY
NAVAL FACILITIES ENGINEERING COMMAND
HAMPTON ROADS IPT - PWD NORFOLK

NAVAL FACILITIES ENGINEERING COMMAND-MID-ATLANTIC
NORFOLK NAVAL STATION

NORFOLK NAVAL STATION, NORFOLK, VIRGINIA

CEP-175 AND Z-308 BULKHEAD REPAIR

STRUCTURAL PLAN & ELEV (16 OF 21)

SCALE: AS NOTED

EPROJECT NO. 1370817

CONSTR. CONTR. NO. N/A

NAVFAC DRAWING NO. 12,729,761

SHEET 106 OF 158

S-116

DRAWFORM REVISION: 10 MARCH 2009

FILE NAME: P:\VA\NavalStationNorfolk\Waterfront\Bulkheads\2015_1370817_CEP-1752-308Repair\B_Design\Drawings\Sheet\07_Structural\1370817_S-100 SERIES.dwg LAYOUT NAME: S-116 STRUCTURAL PLAN & ELEV (16 OF 21) PLOTTED: Wednesday, August 10, 2016 - 11:45am USER: christine.rukowski

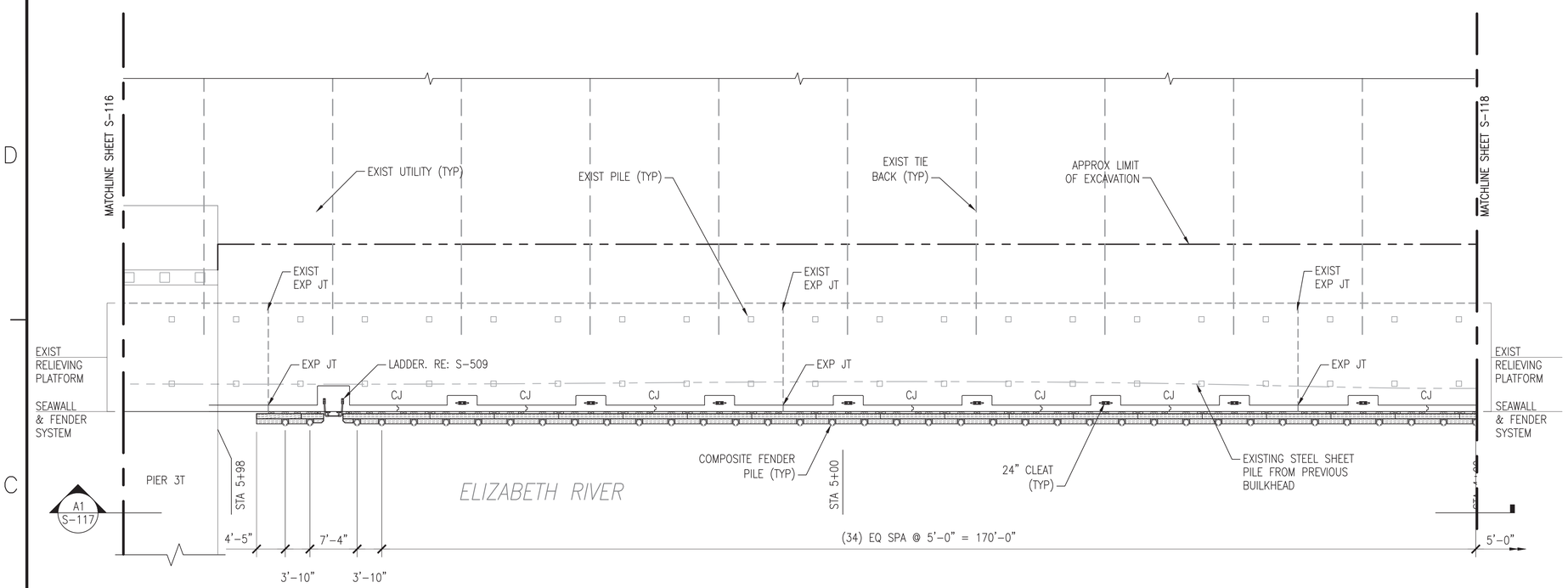

C1 PLAN - CEP-175 BULKHEAD - SOUTH FACE (3 OF 5)

SCALE: 1" = 10'

S-004

NORTH

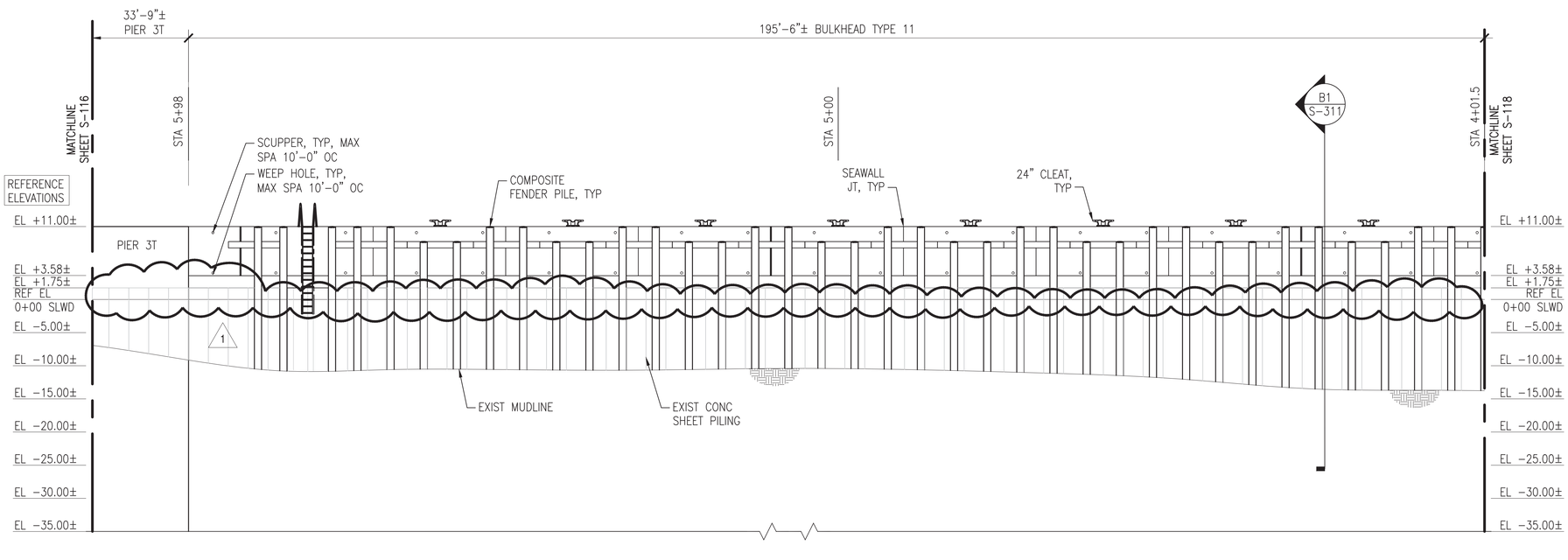

A1 ELEVATION OF BULKHEAD

SCALE: 1" = 10'

S-117

GENERAL SHEET NOTES @ CEP-175

1. PROVIDE CEP-175 BULKHEAD FENDER SYSTEM COMPLETE, TO INCLUDE, BUT NOT LIMITED TO, PRESTRESSED CONCRTE FENDER PILES (WEST FACE), COMPOSITE PILES (NORTH AND SOUTH FACES), CHOCKS, WALES, BLOCKING, WELDMENTS, AND SPACERS.
2. PROVIDE CEP-175 BULKHEAD SEAWALL SYSTEM COMPLETE, TO INCLUDE, BUT NOT LIMITED TO, SEAWALL, CURBING, CLEATS, AND LADDERS.
3. PROVIDE JET-GROUTED SOIL CURTAIN WALL REPAIRS BEHIND THE BULKHEAD AS SHOWN ON THE PLANS.
4. PROVIDE ADDITIONAL RIP RAP MATERIAL OVERLAY FOR SHIP PILE TOE STABILIZATION AS SHOWN ON THE PLANS, SECTIONS, AND DETAILS.
5. PROVIDE CHAINRAIL SYSTEM COMPLETE, TO INCLUDE, BUT NOT LIMITED TO, CHAIN, POSTS, ANCHORS, AND FOUNDATIONS. NOTE: POST SPACING IS 8'-0" MAX, BUT SHALL ADJUST AT CLEAT LOCATIONS, TO ENSURE CLEATS ARE CENTERED BETWEEN POSTS. CHAINRAIL SYSTEM SHALL BE ON THE WEST SIDE OF CEP-175 AND EXTEND AROUND THE CORNERS OF THE NORTH AND SOUTH SIDES OF CEP-175 APPROXIMATELY 100'-0". REFER TO DETAILS ON S-507.
6. MUDLINE INFORMATION IS BASED UPON NAVFAC HYDROLOGICAL SURVEY DATA FROM JANUARY 2015 AND IS PROVIDED FOR REFERENCE ONLY.
7. ELEVATIONS SHOWN ON THE SD SERIES DRAWINGS ARE NOTED AS REFERENCE ELEVATIONS, AND CORRESPOND TO THE PROVIDED AS-BUILT DRAWINGS FOR THE BULKHEAD. CONTRACTOR SHALL SET UP TEMPORARY BENCHMARKS AND COORDINATE REAL TIME ELEVATIONS WITH CIVIL DRAWINGS AND DATUM PROVIDED ON G-002.
8. FOR CONCRETE FENDER PILES, REFER TO SHEET S-505.
9. FOR COMPOSITE FENDER PILES, REFER TO SHEET S-506.
10. FOR TYPICAL EXPANSION JOINT, CONSTRUCTION JOINT, AND SEAWALL CORNER DETAILS, REFER TO SHEET S-502.

TABULATED NEW WORK QUANTITIES (THIS SHEET)

SYMBOL	ITEM	QUANTITY	UNIT
OR	CONCRETE FENDER PILE	–	EA
	COMPOSITE FENDER PILE	38	EA
	42" CLEAT	–	EA
	24" CLEAT	8	EA
	LADDER	1	EA
	TIMBER WALE WITH BLOCKING	185	LF
	TIMBER CHOCK WITH SPACERS	144	LF
	GROUT CURTAIN	–	LF
	CHAIN / POSTS	–	LF/EA

NOTE: ALL NEW WORK DIMENSIONS ARE APPROXIMATE AND REPRESENT THE OVERALL EXTENT OF WORK REQUIRED AT THAT LOCATION. REFER TO TYPICAL SECTIONS/DETAILS AND REFERENCE DRAWINGS FOR ADDITIONAL INFORMATION.

KEY PLAN

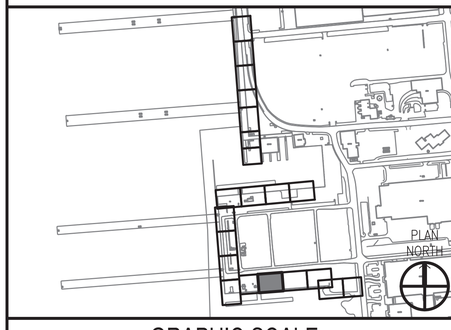

GRAPHIC SCALE

1"=10' 0' 10' 20'

SYM	DESCRIPTION	DATE	APPR.
1	REMOVE WATER LEVEL WARNINGS	8/12/2016	KAD

NAVFAC

SEAL

A/E INFO

APPROVED

FOR COMMANDER NAVFAC 8-11-16

ACTIVITY DAVE SEARS

SATISFACTORY TO DATE 6/17/2016

DES ELT DRW KAD CHK CLT

DESIGN MANAGER EDDY THEISZ

BRANCH MANAGER CAT

CHIEF ENGINEER J. HASTE, P.E.

FIRE PROTECTION

DEPARTMENT OF THE NAVY
NAVAL FACILITIES ENGINEERING COMMAND
HAMPTON ROADS IPT - PWD NORFOLK

NAVAL FACILITIES ENGINEERING COMMAND-MID-ATLANTIC
NORFOLK NAVAL STATION

NORFOLK NAVAL STATION, NORFOLK, VIRGINIA

CEP-175 AND Z-308 BULKHEAD REPAIR

STRUCTURAL PLAN & ELEV (17 OF 21)

SCALE: AS NOTED

EPROJECT NO. 1370817

CONSTR. CONTR. NO. N/A

NAVFAC DRAWING NO. 12,729,762

SHEET 107 OF 158

S-117

DRAWFORM REVISION: 10 MARCH 2009

FILE NAME: P:\VA\NavalStationNorfolk\Waterfront\Bulkheads\2015_1370817_CEP-1752-308Repair\B_Design\Drawings\Sheet\07_Structural\1370817_S-100 SERIES.dwg LAYOUT NAME: S-117 STRUCTURAL PLAN & ELEV (17 OF 21) PLOTTED: Wednesday, August 10, 2016 - 11:45am USER: christine.rukowski

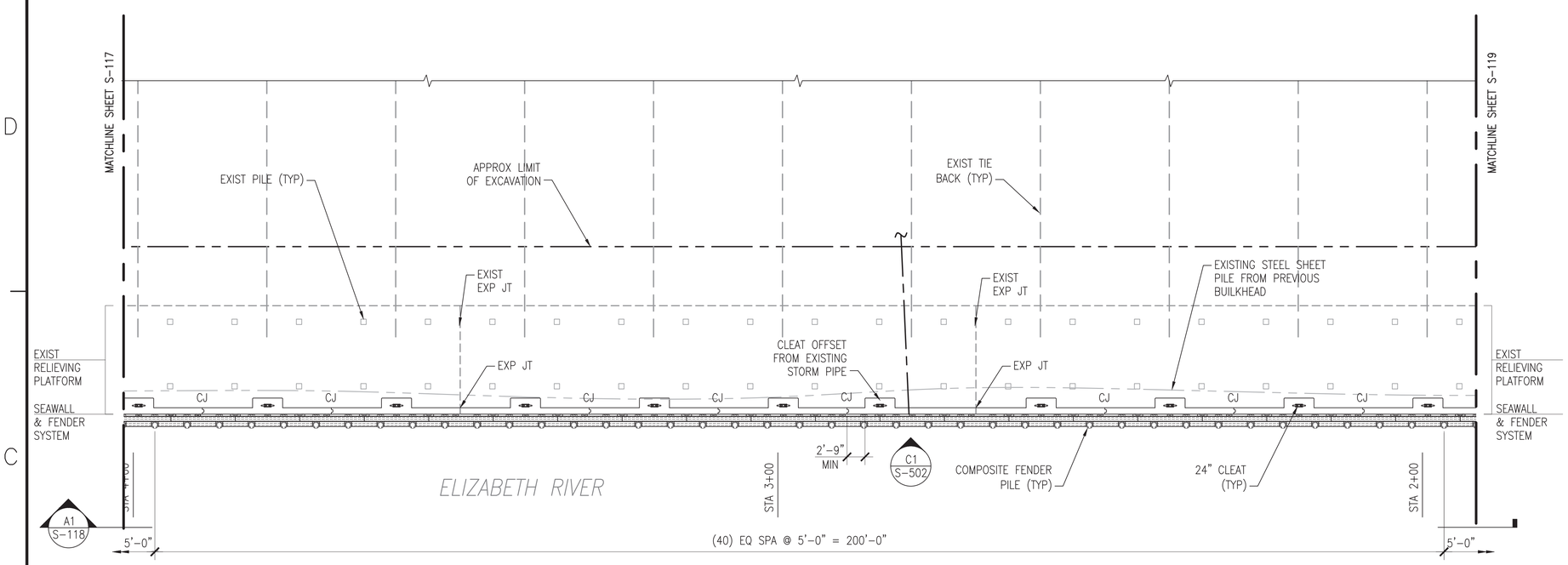

C1 PLAN - CEP-175 BULKHEAD - SOUTH FACE (4 OF 5)

SCALE: 1" = 10'

NORTH

S-004

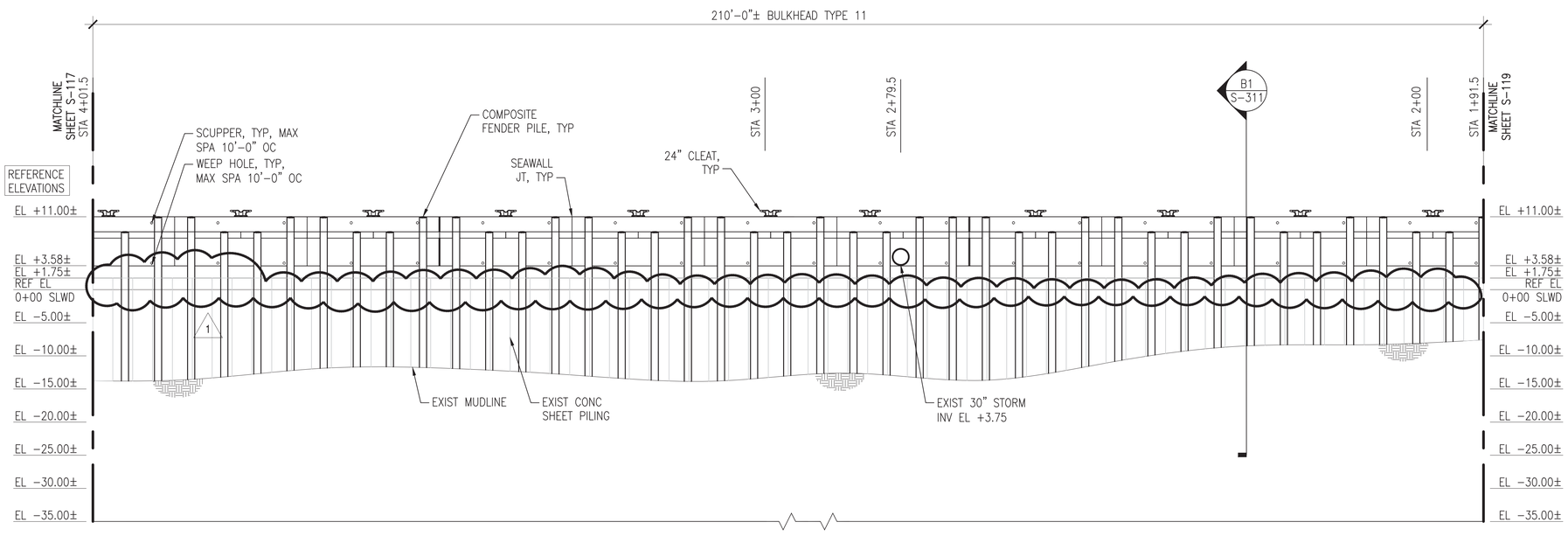

A1 ELEVATION OF BULKHEAD

SCALE: 1" = 10'

S-118

GENERAL SHEET NOTES @ CEP-175

1. PROVIDE CEP-175 BULKHEAD FENDER SYSTEM COMPLETE, TO INCLUDE, BUT NOT LIMITED TO, PRESTRESSED CONCRTE FENDER PILES (WEST FACE), COMPOSITE PILES (NORTH AND SOUTH FACES), CHOCKS, WALES, BLOCKING, WELDMENTS, AND SPACERS.
2. PROVIDE CEP-175 BULKHEAD SEAWALL SYSTEM COMPLETE, TO INCLUDE, BUT NOT LIMITED TO, SEAWALL, CURBING, CLEATS, AND LADDERS.
3. PROVIDE JET-GROUTED SOIL CURTAIN WALL REPAIRS BEHIND THE BULKHEAD AS SHOWN ON THE PLANS.
4. PROVIDE ADDITIONAL RIP RAP MATERIAL OVERLAY FOR SHIP PILE TOE STABILIZATION AS SHOWN ON THE PLANS, SECTIONS, AND DETAILS.
5. PROVIDE CHAINRAIL SYSTEM COMPLETE, TO INCLUDE, BUT NOT LIMITED TO, CHAIN, POSTS, ANCHORS, AND FOUNDATIONS. NOTE: POST SPACING IS 8'-0" MAX, BUT SHALL ADJUST AT CLEAT LOCATIONS, TO ENSURE CLEATS ARE CENTERED BETWEEN POSTS. CHAINRAIL SYSTEM SHALL BE ON THE WEST SIDE OF CEP-175 AND EXTEND AROUND THE CORNERS OF THE NORTH AND SOUTH SIDES OF CEP-175 APPROXIMATELY 100'-0". REFER TO DETAILS ON S-507.
6. MUDLINE INFORMATION IS BASED UPON NAVFAC HYDROLOGICAL SURVEY DATA FROM JANUARY 2015 AND IS PROVIDED FOR REFERENCE ONLY.
7. ELEVATIONS SHOWN ON THE SD SERIES DRAWINGS ARE NOTED AS REFERENCE ELEVATIONS, AND CORRESPOND TO THE PROVIDED AS-BUILT DRAWINGS FOR THE BULKHEAD. CONTRACTOR SHALL SET UP TEMPORARY BENCHMARKS AND COORDINATE REAL TIME ELEVATIONS WITH CIVIL DRAWINGS AND DATUM PROVIDED ON G-002.
8. FOR CONCRETE FENDER PILES, REFER TO SHEET S-505.
9. FOR COMPOSITE FENDER PILES, REFER TO SHEET S-506.
10. FOR TYPICAL EXPANSION JOINT, CONSTRUCTION JOINT, AND SEAWALL CORNER DETAILS, REFER TO SHEET S-502.

TABULATED NEW WORK QUANTITIES (THIS SHEET)

SYMBOL	ITEM	QUANTITY	UNIT
OR	CONCRETE FENDER PILE	–	EA
	COMPOSITE FENDER PILE	42	EA
	42" CLEAT	–	EA
	24" CLEAT	11	EA
	LADDER	–	EA
	TIMBER WALE WITH BLOCKING	210	LF
	TIMBER CHOCK WITH SPACERS	165	LF
	GROUT CURTAIN	–	LF
	CHAIN / POSTS	–	LF/EA

NOTE: ALL NEW WORK DIMENSIONS ARE APPROXIMATE AND REPRESENT THE OVERALL EXTENT OF WORK REQUIRED AT THAT LOCATION. REFER TO TYPICAL SECTIONS/DETAILS AND REFERENCE DRAWINGS FOR ADDITIONAL INFORMATION.

KEY PLAN

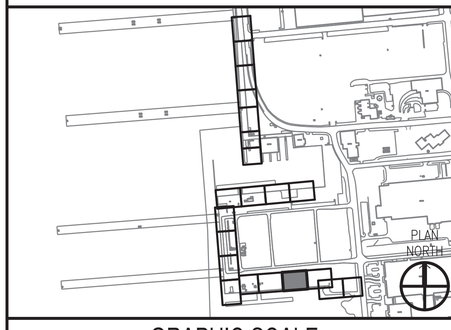

GRAPHIC SCALE

1"=10' 0' 10' 20'

NO.	ZONE	WATER LEVEL WARNINGS	DATE	DESCRIPTION	APPR.
1	---	---	8/12/2016	---	KAD

NAVFAC

A/E INFO

APPROVED

FOR COMMANDER NAVFAC 8-11-16

ACTIVITY DAVE SEARS

SATISFACTORY TO DATE 6/17/2016

DES ELT DRW KAD CHK CLT

DESIGN MANAGER EDDY THEISZ

BRANCH MANAGER CRT

CHIEF ENGINEER J. HASTE, P.E.

FIRE PROTECTION

DEPARTMENT OF THE NAVY
NAVAL FACILITIES ENGINEERING COMMAND
HAMPTON ROADS IPT - PWD NORFOLK

NAVAL FACILITIES ENGINEERING COMMAND-MID-ATLANTIC
NORFOLK NAVAL STATION

NORFOLK NAVAL STATION, NORFOLK, VIRGINIA

CEP-175 AND Z-308 BULKHEAD REPAIR

STRUCTURAL PLAN & ELEV (18 OF 21)

SCALE: AS NOTED

EPROJECT NO. 1370817

CONSTR. CONTR. NO. N/A

NAVFAC DRAWING NO. 12,729,763

SHEET 108 OF 158

S-118

DRAWFORM REVISION: 10 MARCH 2009

FILE NAME: P:\VA\NavalStationNorfolk\Waterfront\Bulkheads\2015_1370817_CEP-1752-308Report\B_Design\Drawings\Sheet\07_Structural\1370817_S-100 SERIES.dwg LAYOUT NAME: S-118 STRUCTURAL PLAN & ELEV (18 OF 21) PLOTTED: Wednesday, August 10, 2016 - 11:45am USER: christine.rutkowski

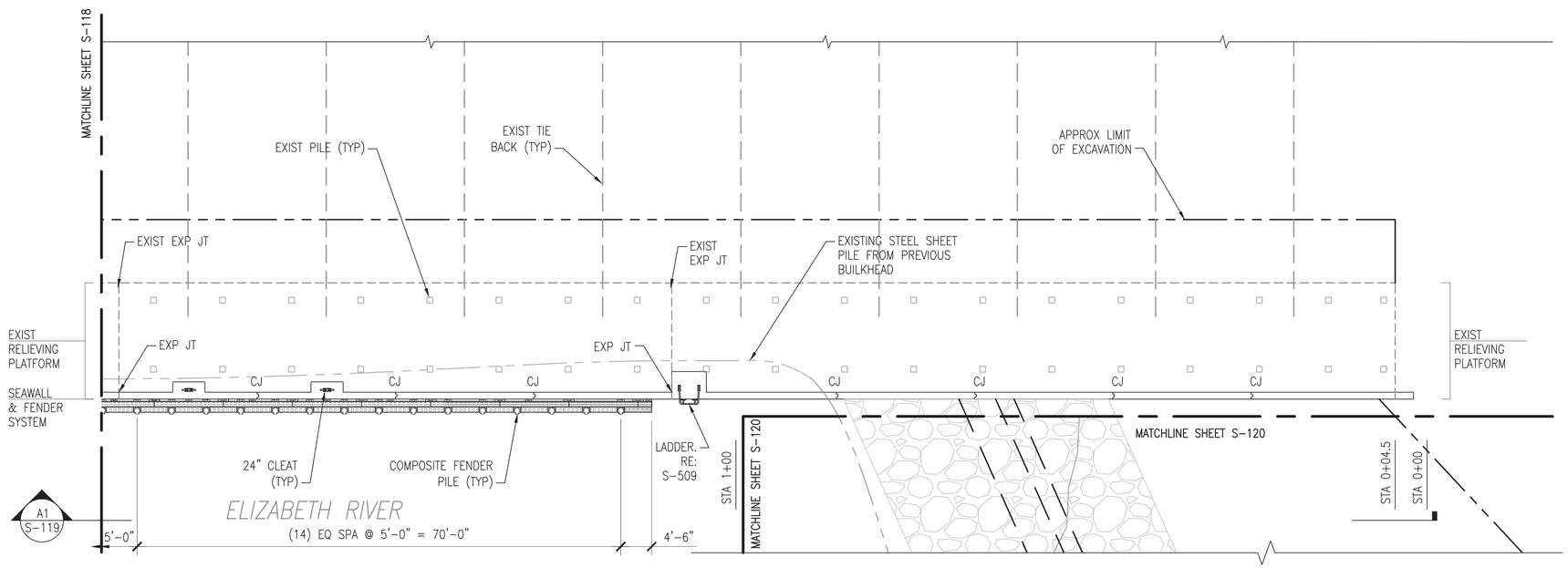

C1 PLAN - CEP-175 BULKHEAD - SOUTH FACE (5 OF 5)

SCALE: 1" = 10'

S-004

NORTH

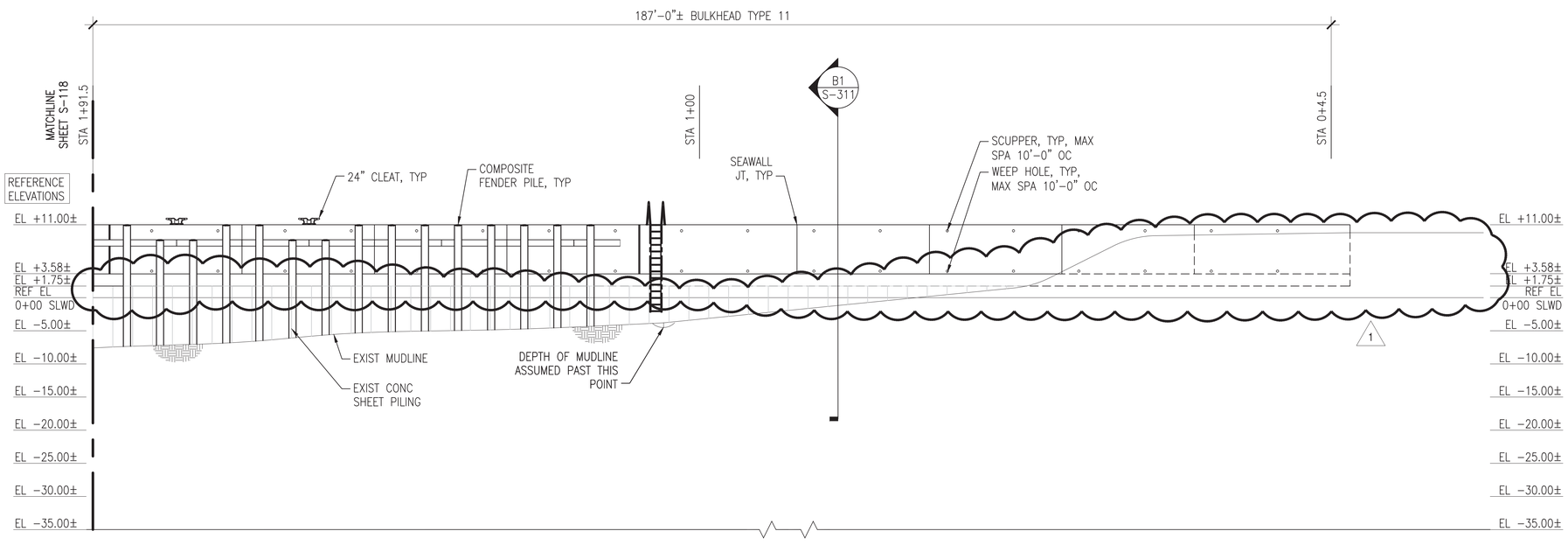

A1 ELEVATION OF BULKHEAD

SCALE: 1" = 10'

S-119

GENERAL SHEET NOTES @ CEP-175

1. PROVIDE CEP-175 BULKHEAD FENDER SYSTEM COMPLETE, TO INCLUDE, BUT NOT LIMITED TO, PRESTRESSED CONCRTE FENDER PILES (WEST FACE), COMPOSITE PILES (NORTH AND SOUTH FACES), CHOCKS, WALES, BLOCKING, WELDMENTS, AND SPACERS.
2. PROVIDE CEP-175 BULKHEAD SEAWALL SYSTEM COMPLETE, TO INCLUDE, BUT NOT LIMITED TO, SEAWALL, CURBING, CLEATS, AND LADDERS.
3. PROVIDE JET-GROUTED SOIL CURTAIN WALL REPAIRS BEHIND THE BULKHEAD AS SHOWN ON THE PLANS.
4. PROVIDE ADDITIONAL RIP RAP MATERIAL OVERLAY FOR SHIP PILE TOE STABILIZATION AS SHOWN ON THE PLANS, SECTIONS, AND DETAILS.
5. PROVIDE CHAINRAIL SYSTEM COMPLETE, TO INCLUDE, BUT NOT LIMITED TO, CHAIN, POSTS, ANCHORS, AND FOUNDATIONS. NOTE: POST SPACING IS 8'-0" MAX, BUT SHALL ADJUST AT CLEAT LOCATIONS, TO ENSURE CLEATS ARE CENTERED BETWEEN POSTS. CHAINRAIL SYSTEM SHALL BE ON THE WEST SIDE OF CEP-175 AND EXTEND AROUND THE CORNERS OF THE NORTH AND SOUTH SIDES OF CEP-175 APPROXIMATELY 100'-0". REFER TO DETAILS ON S-507.
6. MUDLINE INFORMATION IS BASED UPON NAVFAC HYDROLOGICAL SURVEY DATA FROM JANUARY 2015 AND IS PROVIDED FOR REFERENCE ONLY.
7. ELEVATIONS SHOWN ON THE SD SERIES DRAWINGS ARE NOTED AS REFERENCE ELEVATIONS, AND CORRESPOND TO THE PROVIDED AS-BUILT DRAWINGS FOR THE BULKHEAD. CONTRACTOR SHALL SET UP TEMPORARY BENCHMARKS AND COORDINATE REAL TIME ELEVATIONS WITH CIVIL DRAWINGS AND DATUM PROVIDED ON G-002.
8. FOR CONCRETE FENDER PILES, REFER TO SHEET S-505.
9. FOR COMPOSITE FENDER PILES, REFER TO SHEET S-506.
10. FOR TYPICAL EXPANSION JOINT, CONSTRUCTION JOINT, AND SEAWALL CORNER DETAILS, REFER TO SHEET S-502.

TABULATED NEW WORK QUANTITIES (THIS SHEET)

SYMBOL	ITEM	QUANTITY	UNIT
OR	CONCRETE FENDER PILE	–	EA
	COMPOSITE FENDER PILE	15	EA
	42" CLEAT	–	EA
	24" CLEAT	2	EA
	LADDER	1	EA
	TIMBER WALE WITH BLOCKING	80	LF
	TIMBER CHOCK WITH SPACERS	64	LF
	GROUT CURTAIN	–	LF
	CHAIN / POSTS	–	LF/EA

NOTE: ALL NEW WORK DIMENSIONS ARE APPROXIMATE AND REPRESENT THE OVERALL EXTENT OF WORK REQUIRED AT THAT LOCATION. REFER TO TYPICAL SECTIONS/DETAILS AND REFERENCE DRAWINGS FOR ADDITIONAL INFORMATION.

KEY PLAN

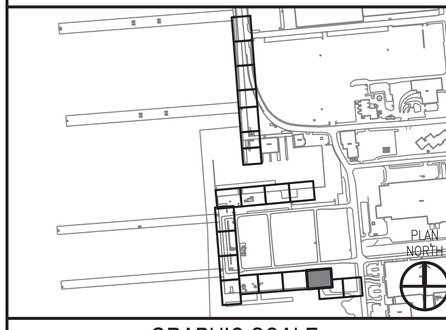

GRAPHIC SCALE

1"=10' 0' 10' 20'

SYM	DESCRIPTION	DATE	APPR.
1	REMOVE WATER LEVEL WARNINGS	8/12/2016	KAD

NAVFAC

SEAL

A/E INFO

APPROVED

FOR COMMANDER NAVFAC 8-11-16

ACTIVITY DAVE SEARS

SATISFACTORY TO DATE 6/17/2016

DES ELT DRW KAD CHK CLT

DESIGN MANAGER EDDY THEISZ

BRANCH MANAGER CRT

CHIEF ENGINEER J. HASTE, P.E.

FIRE PROTECTION

DEPARTMENT OF THE NAVY
NAVAL FACILITIES ENGINEERING COMMAND
HAMPTON ROADS IPT - PWD NORFOLK
NAVAL FACILITIES ENGINEERING COMMAND-MID-ATLANTIC
NORFOLK NAVAL STATION
NORFOLK NAVAL STATION, VIRGINIA

CEP-175 AND Z-308 BULKHEAD REPAIR

STRUCTURAL PLAN & ELEV (19 OF 21)

SCALE: AS NOTED

EPROJECT NO. 1370817

CONSTR. CONTR. NO. N/A

NAVFAC DRAWING NO. 12,729,764

SHEET 109 OF 158

S-119

DRAWFORM REVISION: 10 MARCH 2009

FILE NAME: P:\VA\NavalStationNorfolk\Waterfront\Bulkheads\2015_1370817_CEP-1752-308Repair\B_Design\Drawings\Sheet\07_Structural\1370817_S-100 SERIES.dwg LAYOUT NAME: S-119 STRUCTURAL PLAN & ELEV (19 OF 21) PLOTTED: Wednesday, August 10, 2016 - 11:45am USER: christine.rukowski

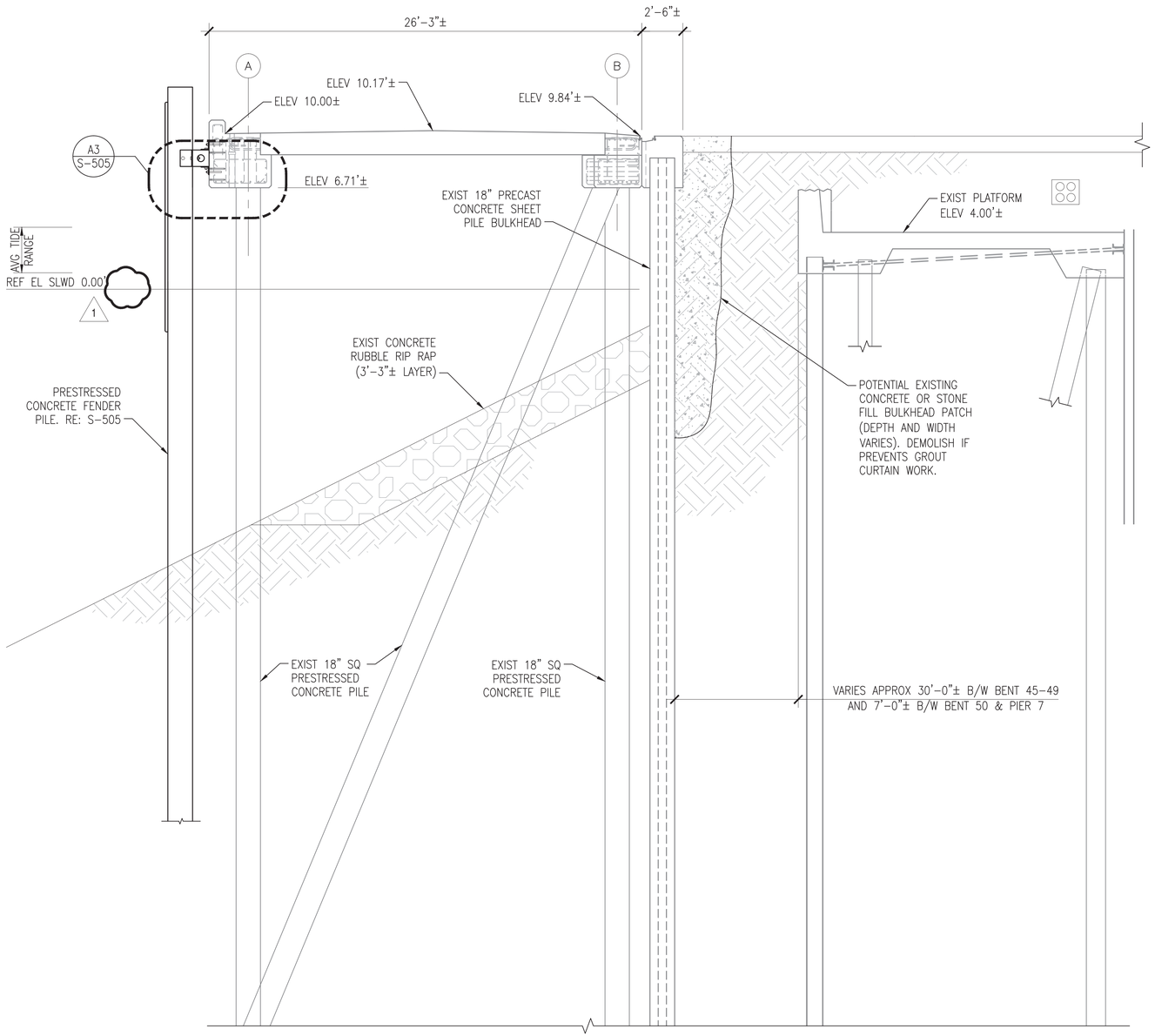

A1 SECTION - BULKHEAD TYPE 1

SCALE: 1/4" = 1'-0"

S-101

GRAPHIC SCALE

1/4"=1'-0" 0' 2' 4' 8'

	REMOVE WATER LEVEL WARNINGS	8/12/2016	CMR	APPR.
SYM.	DESCRIPTION.	DATE.		

NAVFAC

SEAL

A/E INFO.

APPROVED

FOR COMMANDER NAVFAC 8-11-16

ACTIVITY

DAVE SEARS

SATISFACTORY TO DATE 6/17/2016

DES ELT DRW CMR CHK CLT

DESIGN MANAGER EDDY THEISZ

BRANCH MANAGER CRT

CHIEF ENGINEER J. HASTE, P.E.

FIRE PROTECTION

DEPARTMENT OF THE NAVY
NAVAL FACILITIES ENGINEERING COMMAND
NAVAL FACILITIES ENGINEERING COMMAND–MID-ATLANTIC
HAMPTON ROADS IPT – PWD NORFOLK
NORFOLK NAVAL STATION
NORFOLK NAVAL STATION
NORFOLK, VIRGINIA

CEP-175 AND Z-308 BULKHEAD REPAIR

SECTIONS

SCALE: AS NOTED

EPROJECT NO. 1370817

CONSTR. CONTR. NO. N/A

NAVFAC DRAWING NO. 12,729,767

SHEET 112 OF 158

S-301

DRAWFORM REVISION: 10 MARCH 2009

FILE NAME: P:\VA\NavalStationNorfolk\Waterfront\Bulkheads\2015_1370817_CEP-175Z-308Repair\B_Design\Drawings\Sheet\07_Structural\1370817_S-300 SERIES.dwg LAYOUT NAME: S-301 SECTIONS PLOTTED: Wednesday, August 10, 2016 - 11:45am USER: christine.rulkowski

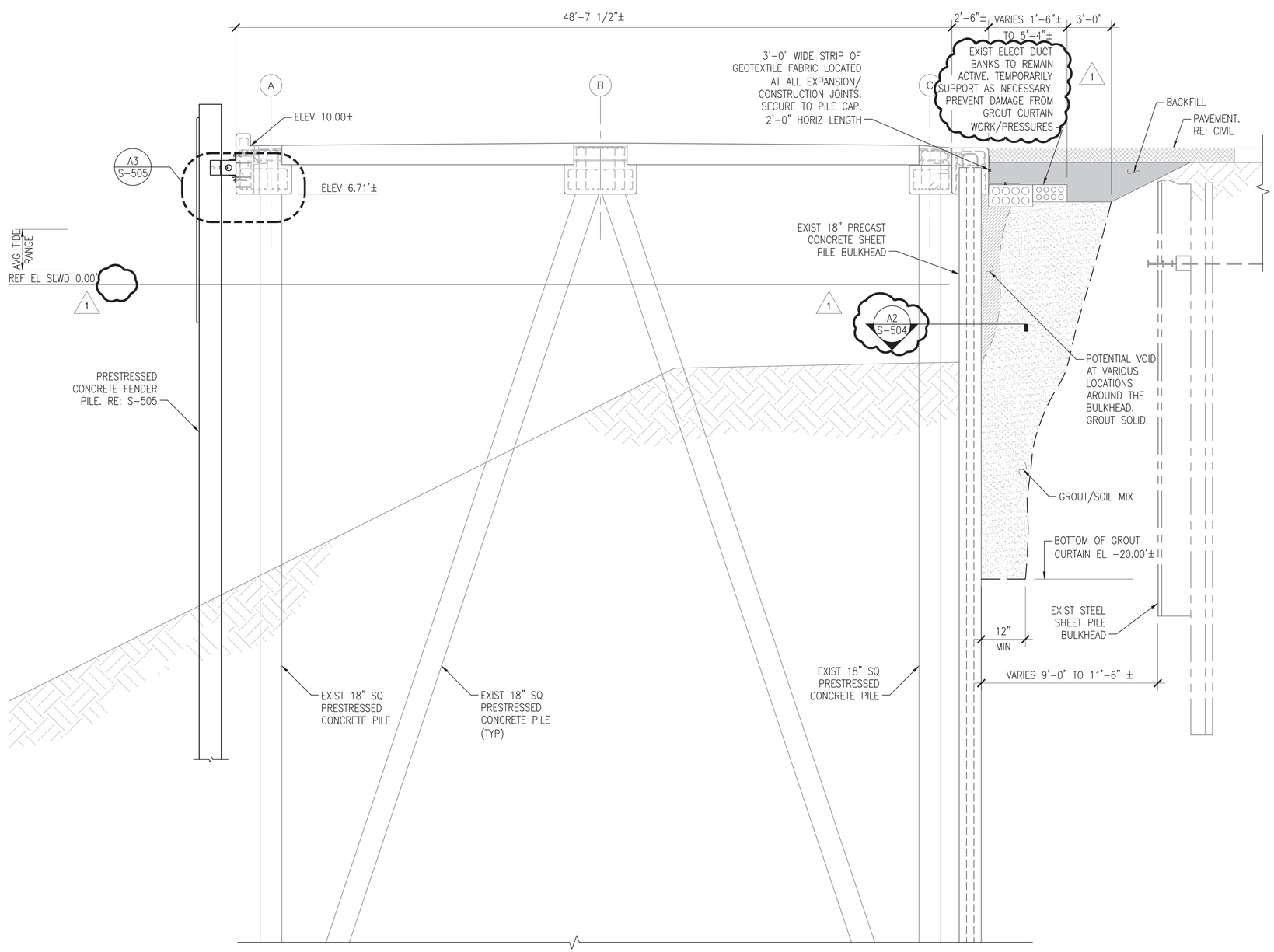

A1 SECTION - BULKHEAD TYPE 2

SCALE: 1/4" = 1'-0"

S-102 TO S-104

GENERAL SHEET NOTES

1. REFER TO PLANS FOR LOCATIONS OF GROUT CURTAIN WORK.

TYPICAL Z-308 GROUT CURTAIN PROCEDURE:

1. GROUT CURTAIN INSTALLATION SHALL NOT BEGIN UNTIL ALL GAPS AND LOCATIONS OF FILL LOSS HAVE BEEN DETERMINED AND REPAIR AREAS APPROVED BY THE CONTRACTING OFFICER.
2. INSPECTION SHALL OCCUR FOR THE ENTIRE LENGTH OF THE BULKHEAD WALL BETWEEN PIERS 6 & 7, AND NOT JUST AT THE AREAS IDENTIFIED ON PLANS. EXTERIOR OF EXISTING SHEET PILES SHALL BE INSPECTED BY DIVERS AND ALL JOINTS PROBED TO DETERMINE IF FILL IS BEING LOST BETWEEN THE SHEETS.
3. FOR THE AREAS ALREADY IDENTIFIED ON THE PLANS, EXCAVATE THE TRENCH TO THE APPROXIMATE LIMITS SHOWN. EACH TRENCH SHALL BE FLOODED AND AN ENVIRONMENTALLY FRIENDLY DYE RELEASED. DIVERS SHALL MONITOR THE OPERATION TO DETERMINE ANY ADDITIONAL LOCATIONS OF POTENTIAL FILL LOSS.
4. ANY LOCATION, OUTSIDE OF THE AREAS MARKED ON PLANS, THAT HAVE THE POTENTIAL OF BECOMING A LOCATION FOR FUTURE FILL LOSS SHALL BE IDENTIFIED TO THE CONTRACTING OFFICER.
5. EXCAVATE SOIL AND PREVIOUSLY PLACED STONE/CONCRETE TO PROVIDE A DIVERSION TRENCH AND EXPOSE THE TOPS OF THE SHEET PILE/BOTTOMS OF DUCT BANKS. SLOPE ANY EXCAVATIONS IN ACCORDANCE WITH COE-EM385.
6. THE SPACING OF GROUT HOLES IS DEPENDENT UPON CONTRACTORS' PROPOSED METHOD OF GROUT INJECTION. SPACING OF HOLES TO PROVIDE A CONTINUOUS, IMPERVIOUS GROUT CURTAIN SHALL BE ESTABLISHED IN THE FILED BY PERFORMING A TEST SECTION OF THE PROPOSED GROUT CURTAIN. CONTINUITY SHALL BE VERIFIED BY TESTING TO THE SATISFACTION OF THE CONTRACTING OFFICER PRIOR TO STARTING BULKHEAD GROUTING.
7. INSERT TIP OF GROUT TUBE TO -20.00' AND BEGIN GROUTING. CONTRACTOR SHALL CONTINUOUSLY MONITOR AND PACK SHEET PILE INTERLOCK JOINTS AS NECESSARY TO PREVENT GROUT LOSS THRU THE BULKHEAD AS GROUT TUBE IS SLOWLY RAISED. DO NOT OVERLOAD SHEET PILES.
8. AFTER GROUTING PROCESS IS COMPLETE, BACKFILL, COMPACT, AND PROVIDE PAVEMENT REPAIRS.
9. DO NOT BEGIN PAVING OPERATIONS IN THE VICINITY OF THE GROUT CURTAIN UNTIL ALL GROUTING OPERATIONS ARE COMPLETE.
10. AT UTILITY BULKHEAD PENETRATIONS, ADJUST SPACING OF GROUT CURTAIN CELLS TO ENCOMPASS ENTIRE UTILITY LINE AND SEAL THE BULKHEAD. TO ENSURE FULL GROUTING AROUND LARGER UTILITIES, CONTRACTOR SHALL ANGLE BORE GROUT CURTAIN CELL TO ACCESS AREA AROUND UTILITY OTHERWISE INACCESSIBLE.

GRAPHIC SCALE

1/4"=1'-0" 0' 2' 4' 8'

SYM	DESCRIPTION	DATE	APPR.
1	WATER LEVEL WARNINGS & ELEC. DUCT CLARIFICATION	8/12/2016	CMR

NAVFAC

SEAL

A/E INFO

APPROVED

FOR COMMANDER NAVFAC 8-11-16

ACTIVITY

DAVE SEARS

SATISFACTORY TO DATE 6/17/2016

DES ELT DRW CMR CHK CLT

DESIGN MANAGER EDDY THEISZ

BRANCH MANAGER CMR

CHIEF ENGINEER J. HASTE, P.E.

FIRE PROTECTION

DEPARTMENT OF THE NAVY
NAVAL FACILITIES ENGINEERING COMMAND
NAVAL FACILITIES ENGINEERING COMMAND-MID-ATLANTIC
HAMPTON ROADS IPT - PWD NORFOLK
NORFOLK NAVAL STATION
NORFOLK NAVAL STATION
NORFOLK, VIRGINIA

CEP-175 AND Z-308 BULKHEAD REPAIR

SECTIONS

SCALE: AS NOTED

EPROJECT NO. 1370817

CONSTR. CONTR. NO. N/A

NAVFAC DRAWING NO. 12,729,768

SHEET 113 OF 158

S-302

DRAWFORM REVISION: 10 MARCH 2009

FILE NAME: P:\VA\NorfolkStationNorfolk\Waterfront\Bulkheads\2015_1370817_CEP-175Z-308Repair\B_Design\Drawings\Sheet\07_Structural\1370817_S-300 SERIES.dwg LAYOUT NAME: S-302 SECTIONS PLOTTED: Wednesday, August 10, 2016 - 11:45am USER: christine.rulkowski

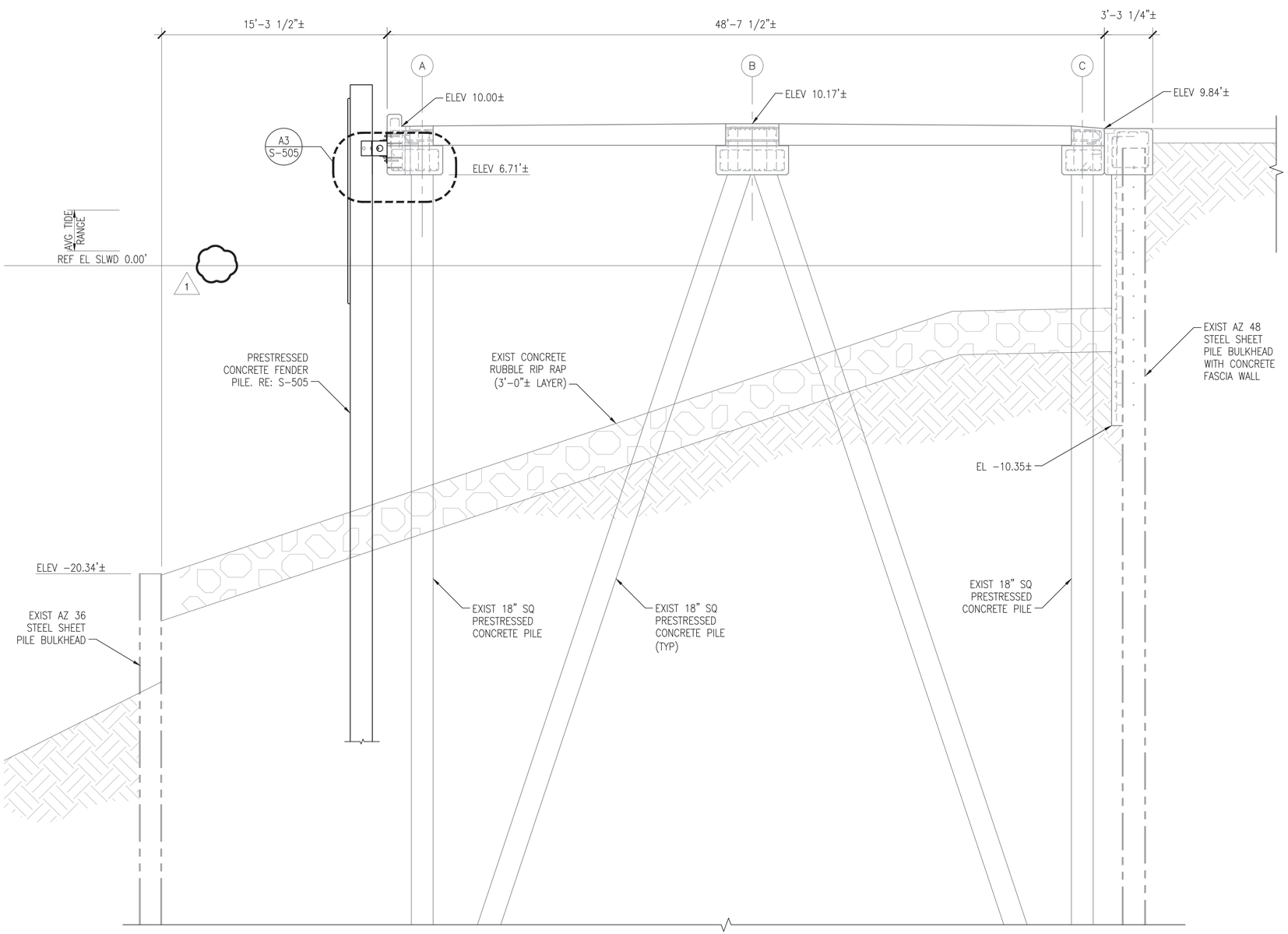

A1 SECTION - BULKHEAD TYPE 3

SCALE: 1/4" = 1'-0"

S-105 TO S-106

GRAPHIC SCALE

1/4"=1'-0" 0' 2' 4' 8'

SYM	DESCRIPTION	DATE	APPR.
1	REMOVE WATER LEVEL MARKINGS	8/12/2016	CMR

NAVFAC

SEAL

A/E INFO

APPROVED FOR COMMANDER NAVFAC 8-11-16

ACTIVITY: DAVE SEARS

SATISFACTORY TO DATE 6/17/2016

DES ELT DRW CMR CHK CLT

DESIGN MANAGER EDDY THEISZ

BRANCH MANAGER CJS

CHIEF ENGINEER J. HASTE, P.E.

FIRE PROTECTION

DEPARTMENT OF THE NAVY
NAVAL FACILITIES ENGINEERING COMMAND
NAVAL FACILITIES ENGINEERING COMMAND–MID-ATLANTIC
HAMPTON ROADS IPT – PWD NORFOLK
NORFOLK NAVAL STATION
NORFOLK NAVAL STATION, NORFOLK, VIRGINIA

CEP-175 AND Z-308 BULKHEAD REPAIR

SECTIONS

SCALE: AS NOTED

EPROJECT NO. 1370817

CONSTR. CONTR. NO. N/A

NAVFAC DRAWING NO. 12,729,769

SHEET 114 OF 158

S-303

DRAWFORM REVISION: 10 MARCH 2009

FILE NAME: P:\VA\NavalStationNorfolk\Waterfront\Bulkheads\2015_1370817_CEP-1752-308Report\8_Design\Drawings\Sheet\07_Structure\1370817_S-300 SERIES.dwg LAYOUT NAME: S-303 SECTIONS PLOTTED: Wednesday, August 10, 2016 - 11:45am USER: christine.rulkowski

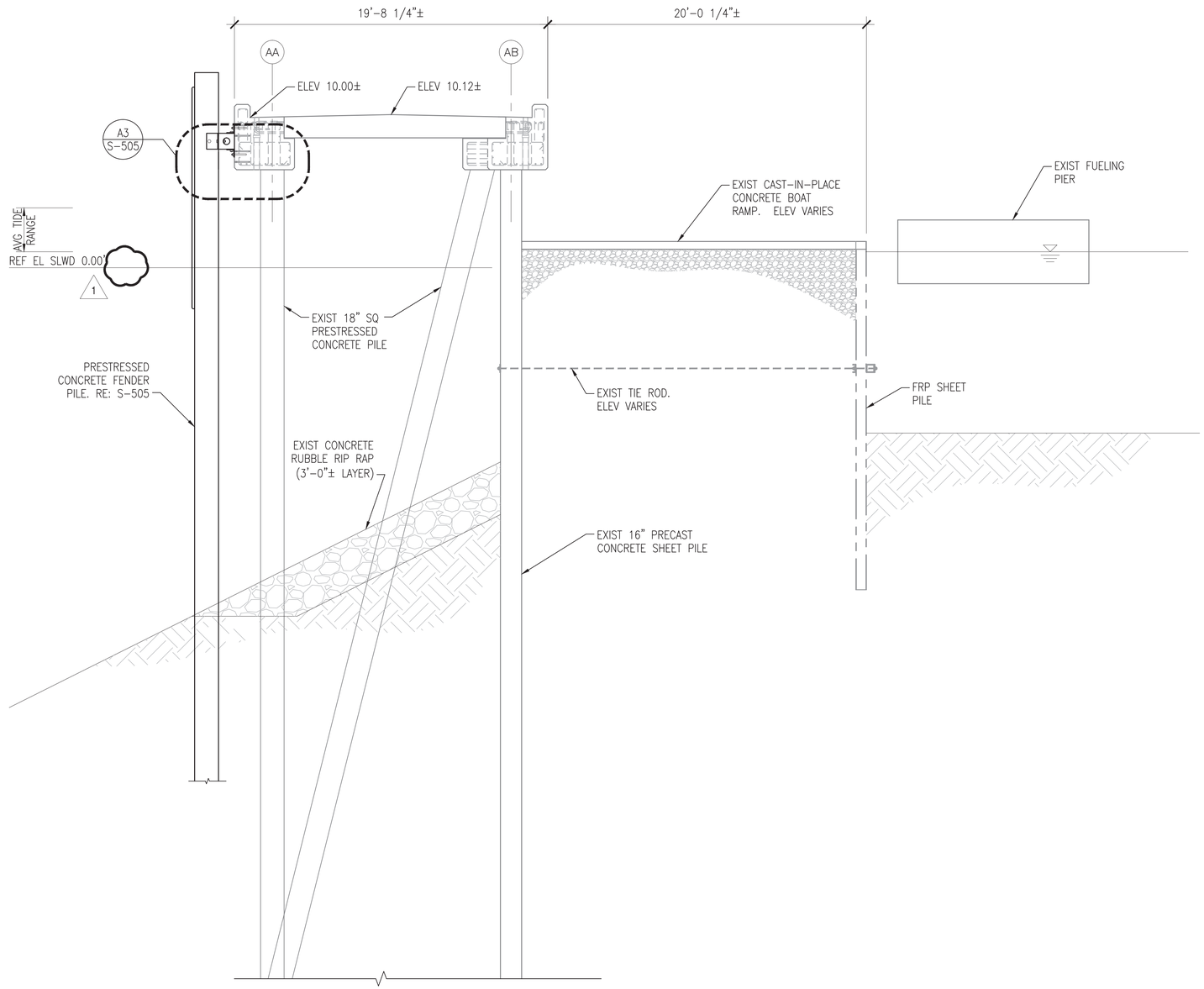

A1 SECTION - BULKHEAD TYPE 4

SCALE: 1/4" = 1'-0"

S-106 TO S-107

GRAPHIC SCALE

1/4"=1'-0" 0' 2' 4' 8'

SYM	DESCRIPTION	DATE	APPR.
1	REMOVE WATER LEVEL MARKINGS	8/12/2016	CMR

SEAL

A/E INFO.

APPROVED

FOR COMMANDER NAVFAC 8-11-16

ACTIVITY

DAVE SEARS

SATISFACTORY TO DATE 6/17/2016

DES ELT DRW CMR CHK CLT

DESIGN MANAGER EDDY THEISZ

BRANCH MANAGER CAT

CHIEF ENGINEER J. HASTE, P.E.

FIRE PROTECTION

DEPARTMENT OF THE NAVY
NAVAL FACILITIES ENGINEERING COMMAND
HAMPTON ROADS IPT - PWD NORFOLK

NAVAL FACILITIES ENGINEERING COMMAND-MID-ATLANTIC
NORFOLK NAVAL STATION

NORFOLK NAVAL STATION NORFOLK, VIRGINIA

CEP-175 AND Z-308 BULKHEAD REPAIR

SECTIONS

SCALE: AS NOTED

EPROJECT NO. 1370817

CONSTR. CONTR. NO. N/A

NAVFAC DRAWING NO. 12,729,770

SHEET 115 OF 158

S-304

DRAWFORM REVISION: 10 MARCH 2009

FILE NAME: P:\VA\NavalStationNorfolk\Waterfront\Bulkheads\2015_1370817_CEP-1752-308Repair\B_Design\Drawings\Sheet\07_Structural\1370817_S-300 SERIES.dwg LAYOUT NAME: S-304 SECTIONS PLOTTED: Wednesday, August 10, 2016 - 11:46am USER: christine.rulkowski

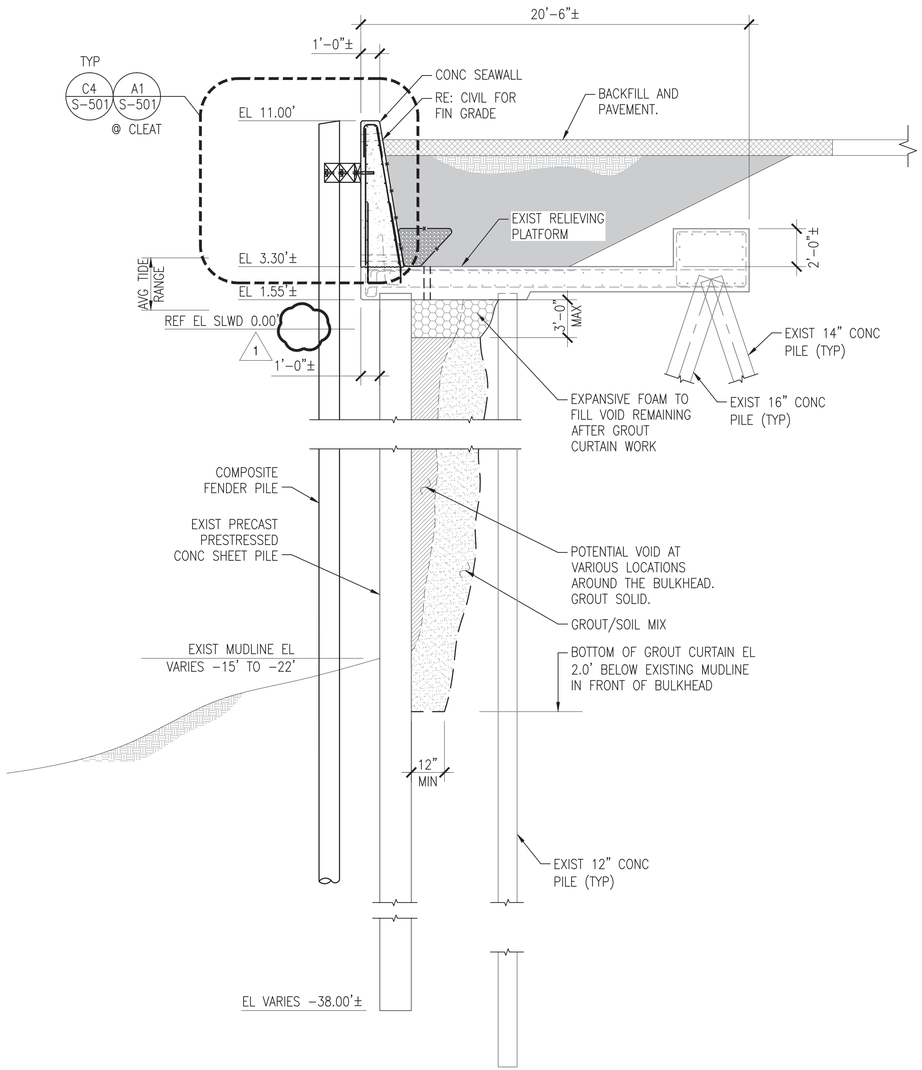

B1 SECTION - BULKHEAD TYPE 5

SCALE: 1/4" = 1'-0"

S-108

GENERAL SHEET NOTES

1. REFER TO PLAN FOR LOCATIONS OF GROUT CURTAIN WORK. REFER TO S-504 FOR GROUT CURTAIN DETAILS AND PROCEDURES.

GRAPHIC SCALE

1/4"=1'-0" 0' 2' 4' 8'

SYM	DESCRIPTION	DATE	APPR.
1	REMOVE WATER LEVEL MARKINGS	8/12/2016	CMR

NAVFAC

SEAL

A/E INFO.

APPROVED FOR COMMANDER NAVFAC 8-11-16

ACTIVITY: DAVE SEARS

SATISFACTORY TO DATE 6/17/2016

DES ELT DFW CMR CHK CLT

DESIGN MANAGER: EDDY THEISZ

BRANCH MANAGER: C&S

CHIEF ENGINEER: J. HASTE, P.E.

FIRE PROTECTION

DEPARTMENT OF THE NAVY
NAVAL FACILITIES ENGINEERING COMMAND
NAVAL FACILITIES ENGINEERING COMMAND–MID-ATLANTIC
HAMPTON ROADS IPT – PWD NORFOLK
NORFOLK NAVAL STATION
NORFOLK NAVAL STATION, NORFOLK, VIRGINIA

CEP-175 AND Z-308 BULKHEAD REPAIR

SECTIONS

SCALE: AS NOTED

EPROJECT NO. 1370817

CONSTR. CONTR. NO. N/A

NAVFAC DRAWING NO. 12,729,771

SHEET 116 OF 158

S-305

DRAWFORM REVISION: 10 MARCH 2009

FILE NAME: P:\VA\NorfolkStationNorfolk\Waterfront\Bulkheads\2015_1370817_CEP-1752-308Repair\B_Design\Drawings\Sheet\07_Structural\1370817_S-300 SERIES.dwg LAYOUT NAME: S-305 SECTIONS PLOTTED: Wednesday, August 10, 2016 - 11:46am USER: christine.rulkowski

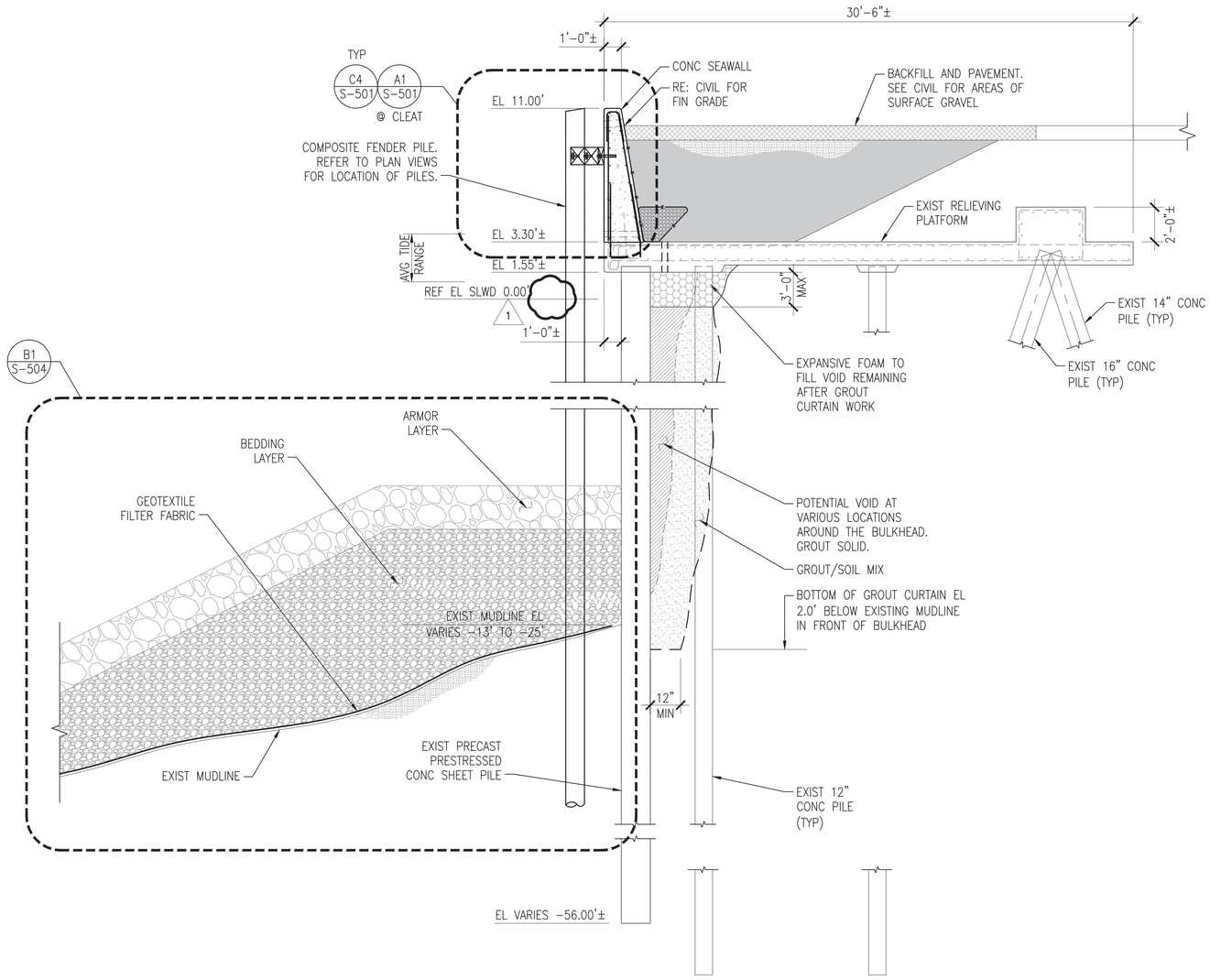

B1 SECTION - BULKHEAD TYPE 6

SCALE: 1/4" = 1'-0"

S-108 TO S-111

GENERAL SHEET NOTES

1. REFER TO PLAN FOR LOCATIONS OF GROUT CURTAIN WORK. REFER TO S-504 FOR GROUT CURTAIN DETAILS AND PROCEDURES.
2. REFER TO GRADING PLAN ON S-401 FOR LOCATION OF SLOPE STABILIZATION IN FRONT OF BULKHEAD.

GRAPHIC SCALE

1/4"=1'-0" 0' 2' 4' 8'

SYM	DESCRIPTION	DATE	APPR.
---	---	---	---
---	---	---	---
---	---	---	---
---	---	---	---
---	---	---	---
---	---	---	---
---	---	---	---

REMOVE WATER LEVEL WARNINGS | 8/12/2016 | CMR

NAVFAC

SEAL

A/E INFO.

APPROVED
FOR COMMANDER NAVFAC 8-11-16

ACTIVITY
DAVE SEARS

SATISFACTORY TO DATE 6/17/2016
DES ELT DRW CMR CHK CLT
DESIGN MANAGER EDDY THEISZ
BRANCH MANAGER CJT
CHIEF ENGINEER J. HASTE, P.E.
FIRE PROTECTION

DEPARTMENT OF THE NAVY
NAVAL FACILITIES ENGINEERING COMMAND
NAVAL FACILITIES ENGINEERING COMMAND–MID-ATLANTIC
HAMPTON ROADS IPT – PWD NORFOLK
NORFOLK NAVAL STATION
NORFOLK NAVAL STATION
NORFOLK, VIRGINIA
CEP-175 AND Z-308 BULKHEAD REPAIR
SECTIONS

SCALE: AS NOTED
EPROJECT NO. 1370817
CONSTR. CONTR. NO. N/A
NAVFAC DRAWING NO. 12,729,772
SHEET 117 OF 158

S-306

DRAWFORM REVISION: 10 MARCH 2009

FILE NAME: P:\VA\NavalStationNorfolk\Waterfront\Bulkheads\2015_1370817_CEP-175Z-308Repair\B_Design\Drawings\Sheet\07_Structural\1370817_S-300 SERIES.dwg LAYOUT NAME: S-306 SECTIONS PLOTTED: Wednesday, August 10, 2016 - 11:54am USER: christine.rulkowski

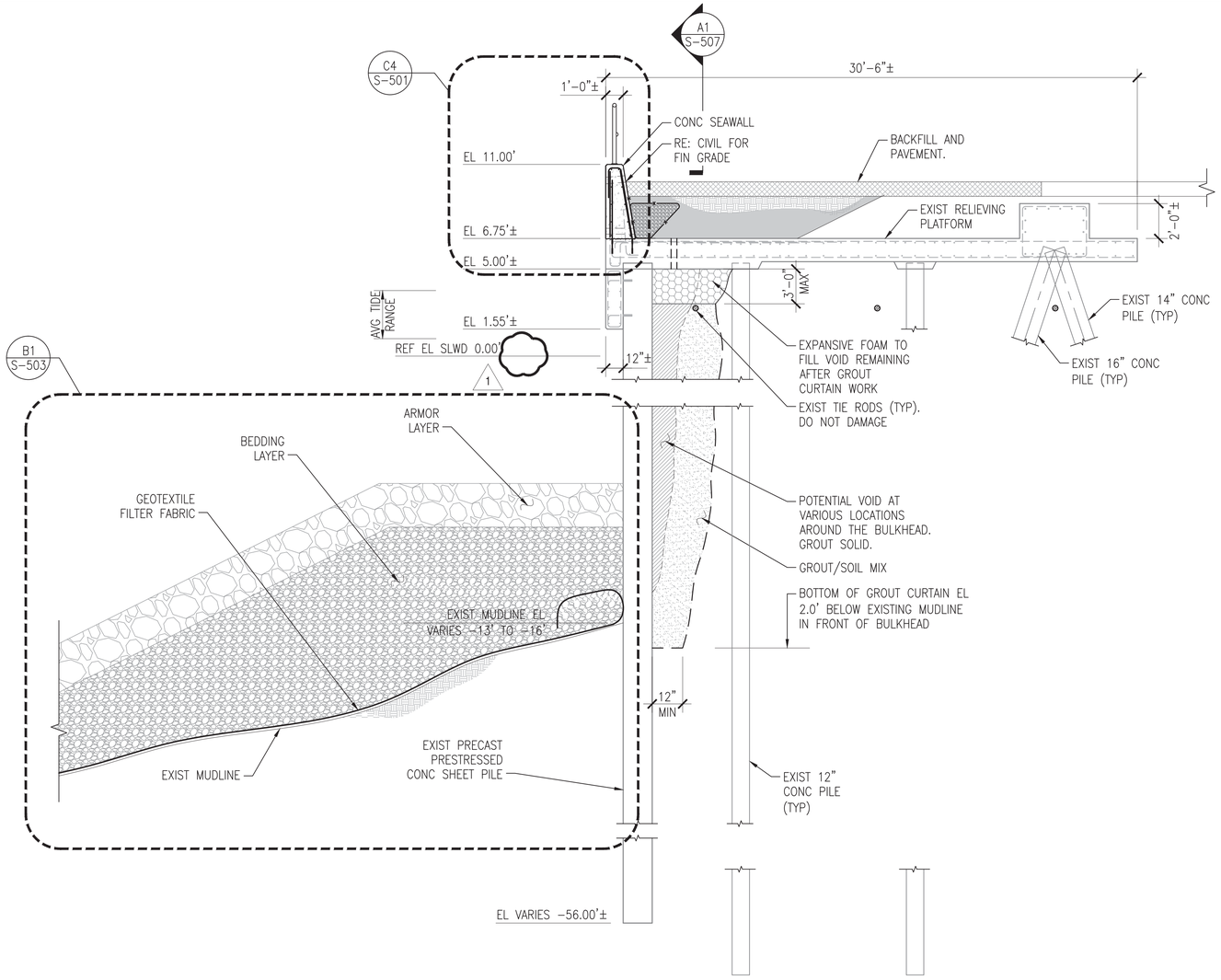

B1 SECTION - BULKHEAD TYPE 7

SCALE: 1/4" = 1'-0"

S-111

GENERAL SHEET NOTES

1. REFER TO PLAN FOR LOCATIONS OF GROUT CURTAIN WORK. REFER TO S-504 FOR GROUT CURTAIN DETAILS AND PROCEDURES.
2. REFER TO GRADING PLAN ON S-401 FOR LOCATION OF SLOPE STABILIZATION IN FRONT OF BULKHEAD.

GRAPHIC SCALE

1/4"=1'-0" 0' 2' 4' 8'

SYM	DESCRIPTION	DATE	APPR.
1	REMOVE WATER LEVEL MARKINGS	8/12/2016	CMR

SEAL

A/E INFO.

APPROVED
FOR COMMANDER NAVFAC 8-11-16

ACTIVITY
DAVE SEARS

SATISFACTORY TO DATE 6/17/2016
DES ELT DRW CMR CHK CLT
DESIGN MANAGER EDDY THEISZ
BRANCH MANAGER CAT
CHIEF ENGINEER J. HASTE, P.E.
FIRE PROTECTION

DEPARTMENT OF THE NAVY
NAVAL FACILITIES ENGINEERING COMMAND
HAMPTON ROADS IPT - PWD NORFOLK
NAVAL FACILITIES ENGINEERING COMMAND-MID-ATLANTIC
NORFOLK NAVAL STATION
NORFOLK NAVAL STATION, NORFOLK, VIRGINIA

CEP-175 AND Z-308 BULKHEAD REPAIR

SECTIONS

SCALE: AS NOTED
EPROJECT NO. 1370817
CONSTR. CONTR. NO. N/A
NAVFAC DRAWING NO. 12,729,773
SHEET 118 OF 158

S-307

DRAWFORM REVISION: 10 MARCH 2009

FILE NAME: P:\VA\NavalStationNorfolk\Waterfront\Bulkhead\2015_1370817_CEP-1752-308Repair\B_Design\Drawings\Sheet\07_Structural\1370817_S-300 SERIES.dwg LAYOUT NAME: S-307 SECTIONS PLOTTED: Wednesday, August 10, 2016 - 11:46am USER: christine.rulkowski

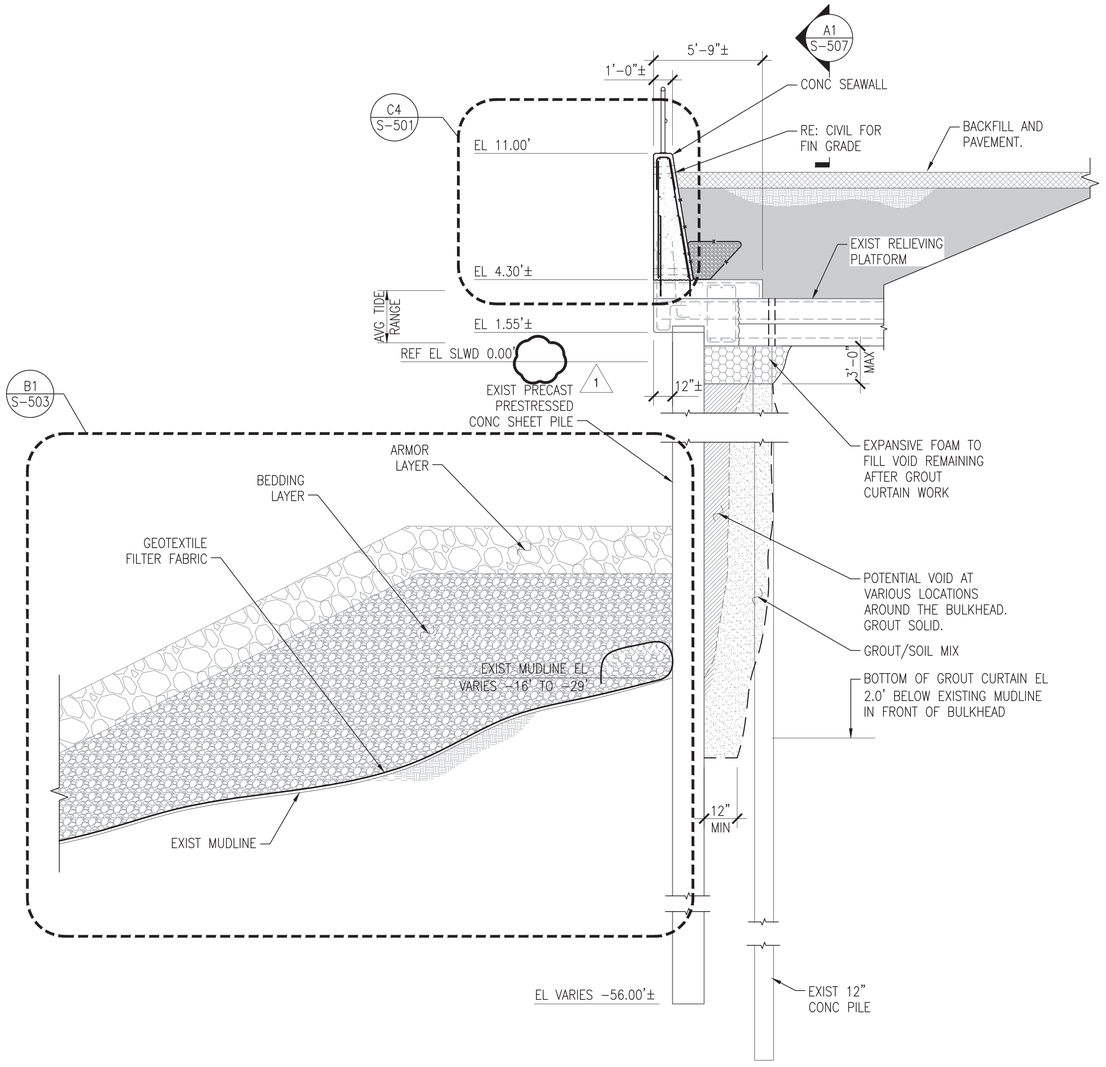

B1 SECTION - BULKHEAD TYPE 8

SCALE: 1/4" = 1'-0"

S-111

GENERAL SHEET NOTES

1. REFER TO PLAN FOR LOCATIONS OF GROUT CURTAIN WORK. REFER TO S-504 FOR GROUT CURTAIN DETAILS AND PROCEDURES.
2. REFER TO GRADING PLAN ON S-401 FOR LOCATION OF SLOPE STABILIZATION IN FRONT OF BULKHEAD.

GRAPHIC SCALE

1/4"=1'-0" 0' 2' 4' 8'

SYM	DESCRIPTION	DATE	APPR.
1	REMOVE WATER LEVEL MARKINGS	8/12/2016	CMR

NAVFAC

SEAL

A/E INFO

APPROVED
FOR COMMANDER NAVFAC 8-11-16

ACTIVITY
DAVE SEARS

SATISFACTORY TO DATE 6/17/2016

DES ELT | DRW CMR | CHK CLT

DESIGN MANAGER EDDY THEISZ

BRANCH MANAGER CAT

CHIEF ENGINEER J. HASTE, P.E.

FIRE PROTECTION

DEPARTMENT OF THE NAVY
NAVAL FACILITIES ENGINEERING COMMAND
HAMPTON ROADS IPT - PWD NORFOLK
NAVAL FACILITIES ENGINEERING COMMAND~MID-ATLANTIC
NORFOLK NAVAL STATION
NORFOLK NAVAL STATION
NORFOLK, VIRGINIA
CEP-175 AND Z-308 BULKHEAD REPAIR
SECTIONS

SCALE: AS NOTED

EPROJECT NO. 1370817

CONSTR. CONTR. NO. N/A

NAVFAC DRAWING NO. 12,729,774

SHEET 119 OF 158

S-308

DRAWFORM REVISION: 10 MARCH 2009

FILE NAME: P:\VA\NavalStationNorfolk\Waterfront\Bulkheads\2015_1370817_CEP-1762-308Repair\B_Design\Drawings\Sheet\07_Structural\1370817_S-300 SERIES.dwg LAYOUT NAME: S-308 SECTIONS PLOTTED: Wednesday, August 10, 2016 - 11:46am USER: christine.rulkowski

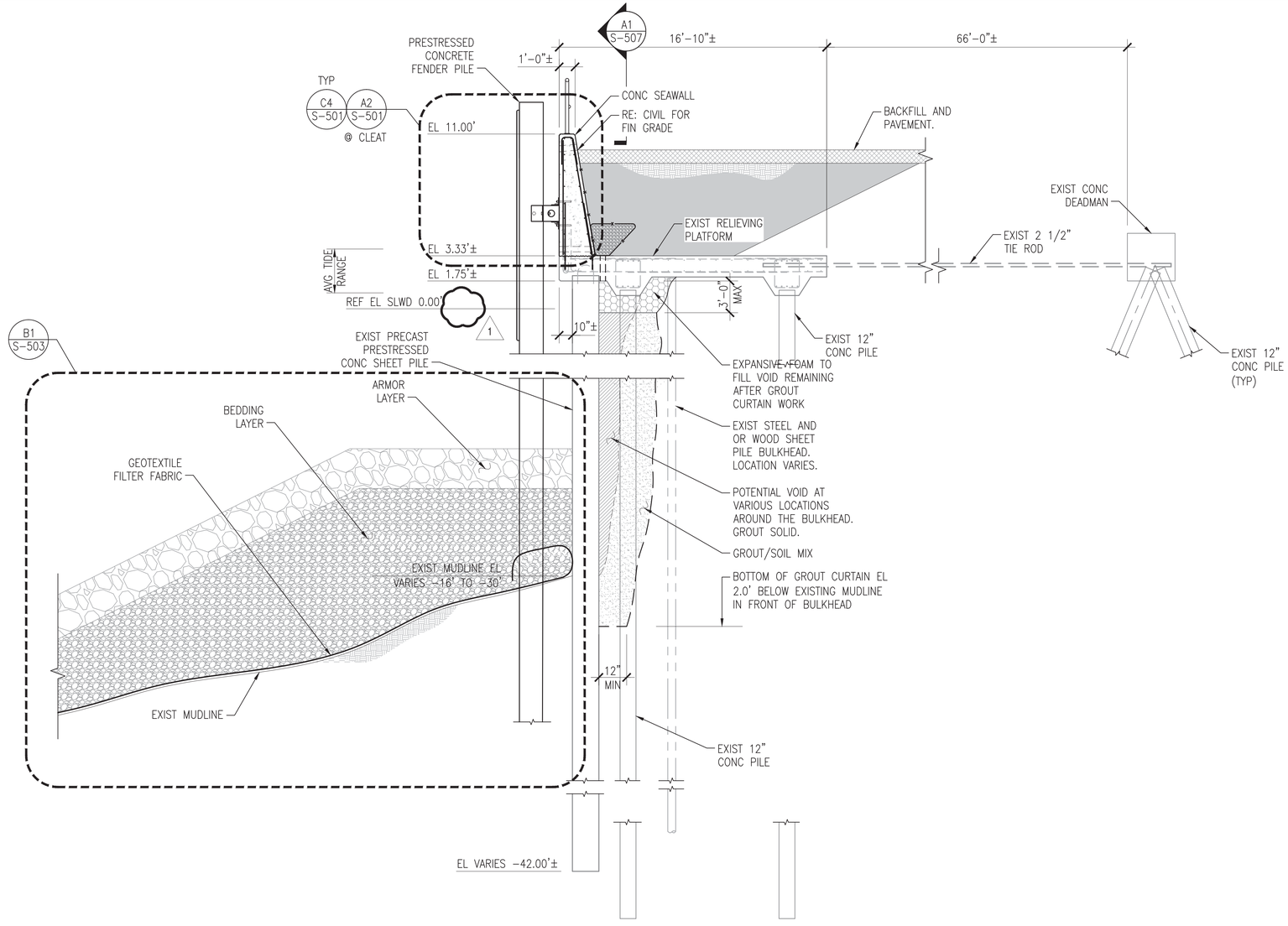

B1 SECTION - BULKHEAD TYPE 9

SCALE: 1/4" = 1'-0"

S-111A TO S-113

GENERAL SHEET NOTES

1. REFER TO PLAN FOR LOCATIONS OF GROUT CURTAIN WORK. REFER TO S-504 FOR GROUT CURTAIN DETAILS AND PROCEDURES.
2. REFER TO GRADING PLAN ON S-401 FOR LOCATION OF SLOPE STABILIZATION IN FRONT OF BULKHEAD.

GRAPHIC SCALE

1/4"=1'-0" 0' 2' 4' 8'

SYM	DESCRIPTION	DATE	APPR.
1	REMOVE WATER LEVEL WARNINGS	8/12/2016	CMR

NAVFAC

SEAL

A/E INFO

APPROVED FOR COMMANDER NAVFAC 8-11-16

ACTIVITY DAVE SEARS

SATISFACTORY TO DATE 6/17/2016

DES ELT DRW CMR CHK CLT

DESIGN MANAGER EDDY THEISZ

BRANCH MANAGER CLT

CHIEF ENGINEER J. HASTE, P.E.

FIRE PROTECTION

DEPARTMENT OF THE NAVY
NAVAL FACILITIES ENGINEERING COMMAND
NAVAL FACILITIES ENGINEERING COMMAND–MID-ATLANTIC
HAMPTON ROADS IPT – PWD NORFOLK
NORFOLK NAVAL STATION
NORFOLK, VIRGINIA

CEP-175 AND Z-308 BULKHEAD REPAIR

SECTIONS

SCALE: AS NOTED

EPROJECT NO. 1370817

CONSTR. CONTR. NO. N/A

NAVFAC DRAWING NO. 12,729,775

SHEET 120 OF 158

S-309

DRAWFORM REVISION: 10 MARCH 2009

FILE NAME: P:\VA\NavalStationNorfolk\Waterfront\Bulkheads\2015_1370817_CEP-1752-308Report\8_Design\Drawings\Sheet\07_Structural\1370817_S-300 SERIES.dwg LAYOUT NAME: S-309 SECTIONS PLOTTED: Wednesday, August 10, 2016 - 11:46am USER: christine.rulkowski

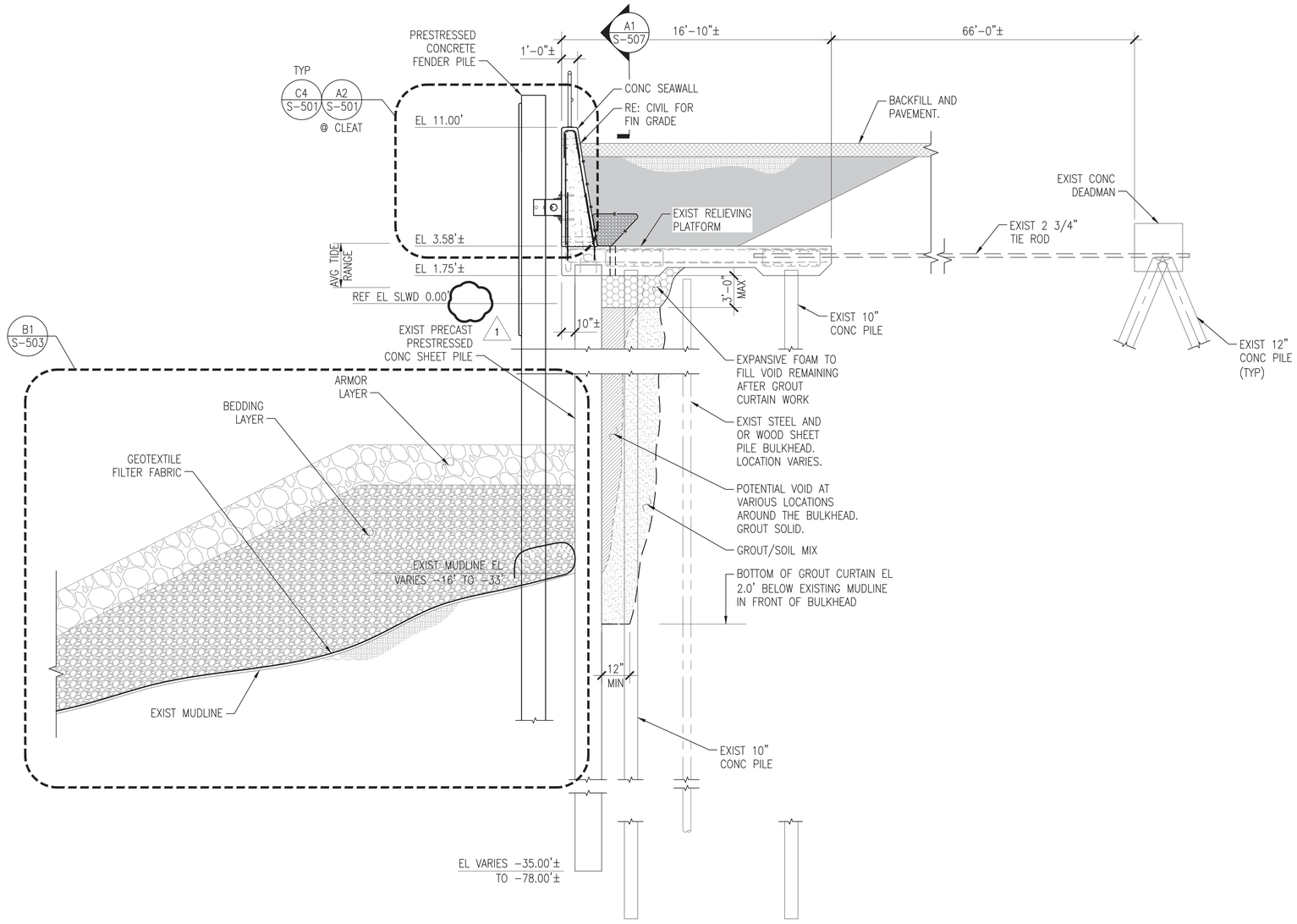

B1 SECTION - BULKHEAD TYPE 10

SCALE: 1/4" = 1'-0"

S-113 TO S-115

GENERAL SHEET NOTES

1. REFER TO PLAN FOR LOCATIONS OF GROUT CURTAIN WORK. REFER TO S-504 FOR GROUT CURTAIN DETAILS AND PROCEDURES.
2. REFER TO GRADING PLAN ON S-401 FOR LOCATION OF SLOPE STABILIZATION IN FRONT OF BULKHEAD.

GRAPHIC SCALE

1/4"=1'-0" 0' 2' 4' 8'

SYM	DESCRIPTION	DATE	CMR
1	REMOVE WATER LEVEL WARNINGS	8/12/2016	---
---	---	---	---
---	---	---	---
---	---	---	---
---	---	---	---
---	---	---	---
---	---	---	---
---	---	---	APPR.

SEAL

A/E INFO

APPROVED

FOR COMMANDER NAVFAC 8-11-16

ACTIVITY

DAVE SEARS

SATISFACTORY TO DATE 6/17/2016

DES ELT DFW CMR CHK CLT

DESIGN MANAGER EDDY THEISZ

BRANCH MANAGER CAT

CHIEF ENGINEER J. HASTE, P.E.

FIRE PROTECTION

DEPARTMENT OF THE NAVY
NAVAL FACILITIES ENGINEERING COMMAND
HAMPTON ROADS IPT - PWD NORFOLK
NAVAL FACILITIES ENGINEERING COMMAND-MID-ATLANTIC
NORFOLK NAVAL STATION
NORFOLK NAVAL STATION
NORFOLK, VIRGINIA
CEP-175 AND Z-308 BULKHEAD REPAIR
SECTIONS

SCALE: AS NOTED

EPROJECT NO. 1370817

CONSTR. CONTR. NO. N/A

NAVFAC DRAWING NO. 12,729,776

SHEET 121 OF 158

S-310

DRAWFORM REVISION: 10 MARCH 2009

FILE NAME: P:\VA\NavalStationNorfolk\Waterfront\Bulkheads\2015_1370817_CEP-1752-308Repair\B_Design\Drawings\Sheet\07_Structural\1370817_S-300 SERIES.dwg LAYOUT NAME: S-310 SECTIONS PLOTTED: Wednesday, August 10, 2016 - 11:46am USER: christine.rulkowski

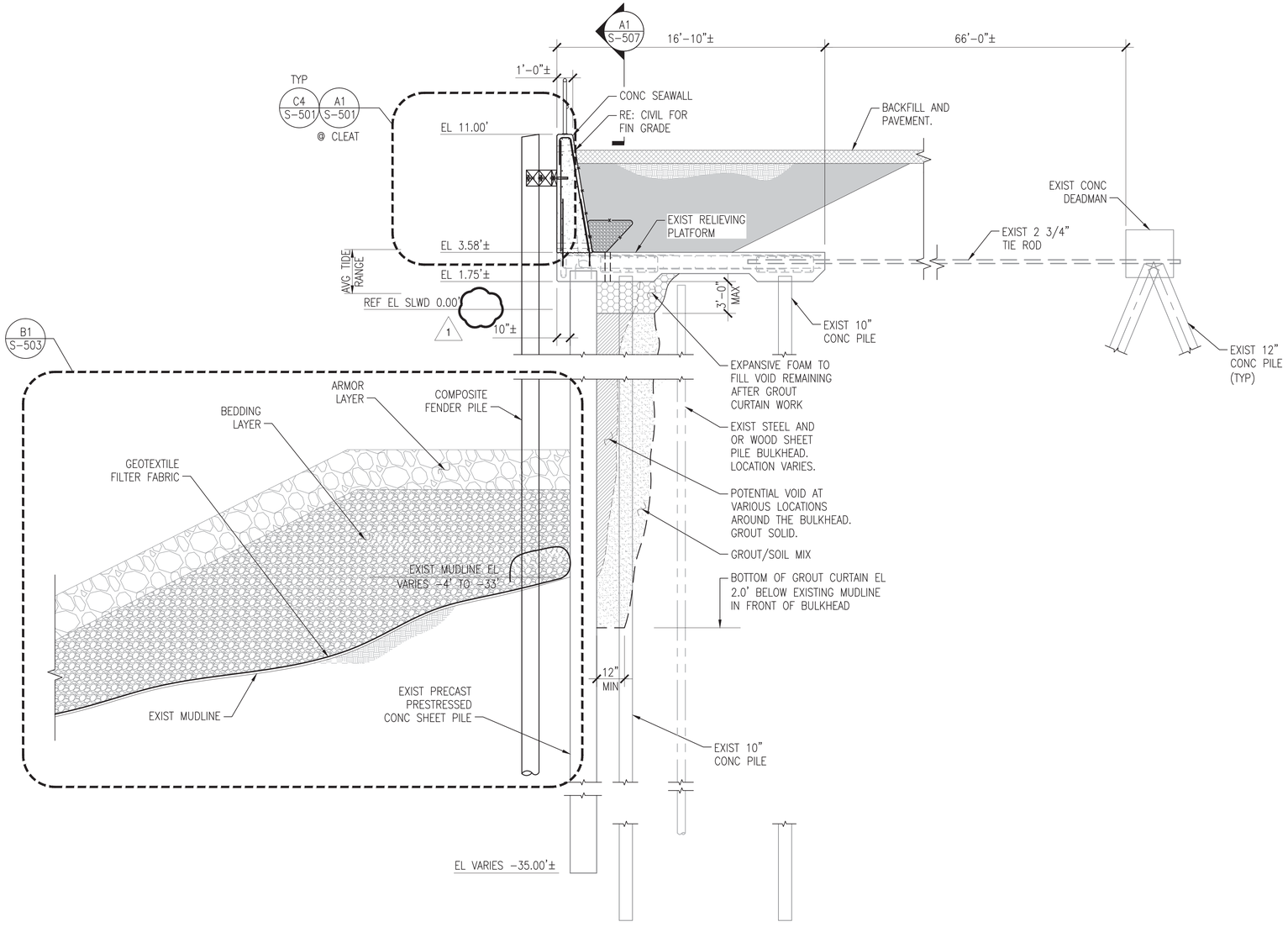

B1 SECTION - BULKHEAD TYPE 11

SCALE: 1/4" = 1'-0"

S-115A TO S-119

GENERAL SHEET NOTES

1. REFER TO PLAN FOR LOCATIONS OF GROUT CURTAIN WORK. REFER TO S-504 FOR GROUT CURTAIN DETAILS AND PROCEDURES.
2. REFER TO GRADING PLAN ON S-401 FOR LOCATION OF SLOPE STABILIZATION IN FRONT OF BULKHEAD.

GRAPHIC SCALE

1/4"=1'-0" 0' 2' 4' 8'

SYM	DESCRIPTION	DATE	APPR.
1	REMOVE WATER LEVEL WARNINGS	8/12/2016	CMR

NAVFAC

SEAL

A/E INFO

APPROVED

FOR COMMANDER NAVFAC 8-11-16

ACTIVITY

DAVE SEARS

SATISFACTORY TO DATE 6/17/2016

DES ELT DRW CMR CHK CLT

DESIGN MANAGER EDDY THEISZ

BRANCH MANAGER CJT

CHIEF ENGINEER J. HASTE, P.E.

FIRE PROTECTION

DEPARTMENT OF THE NAVY
NAVAL FACILITIES ENGINEERING COMMAND
NAVAL FACILITIES ENGINEERING COMMAND–MID-ATLANTIC
HAMPTON ROADS IPT – PWD NORFOLK
NORFOLK NAVAL STATION
NORFOLK NAVAL STATION
NORFOLK, VIRGINIA

CEP-175 AND Z-308 BULKHEAD REPAIR

SECTIONS

SCALE: AS NOTED

EPROJECT NO. 1370817

CONSTR. CONTR. NO. N/A

NAVFAC DRAWING NO. 12,729,777

SHEET 122 OF 158

S-311

DRAWFORM REVISION: 10 MARCH 2009

FILE NAME: P:\VA\NavalStationNorfolk\Waterfront\Bulkheads\2015_1370817_CEP-175Z-308Repair\B_Design\Drawings\Sheet\07_Structural\1370817_S-300 SERIES.dwg LAYOUT NAME: S-311 SECTIONS PLOTTED: Wednesday, August 10, 2016 - 11:46am USER: christine.rulkowski

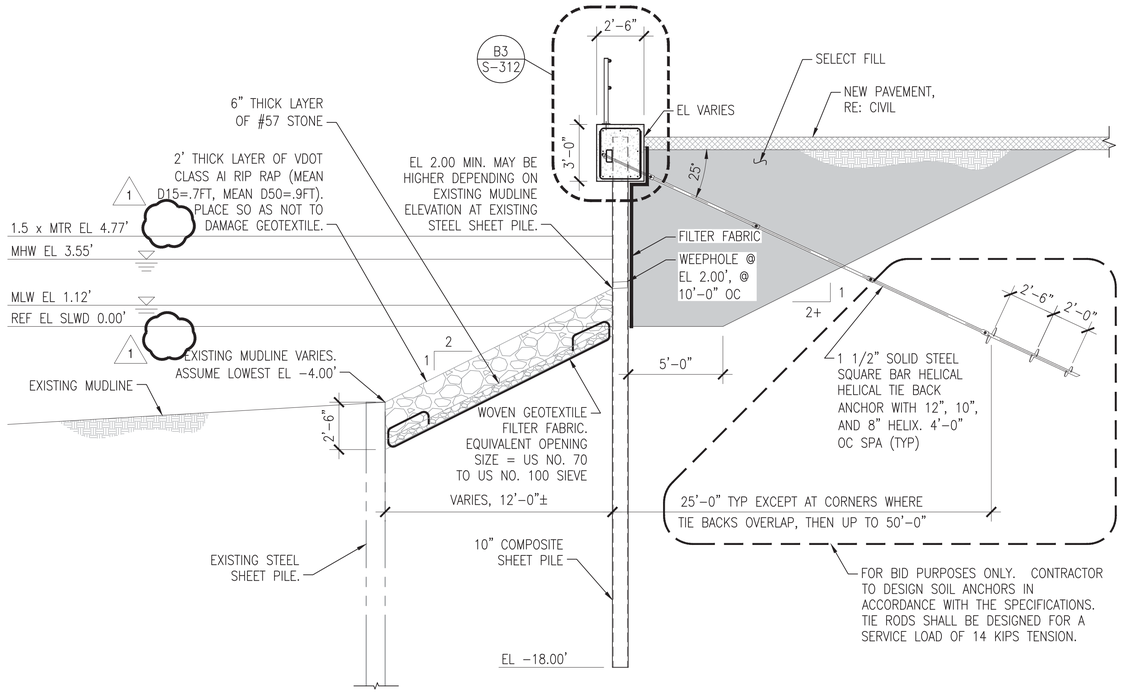

C1 SECTION PATRIOT'S PT

SCALE: 1/4" = 1'-0"

S-120 TO S-121

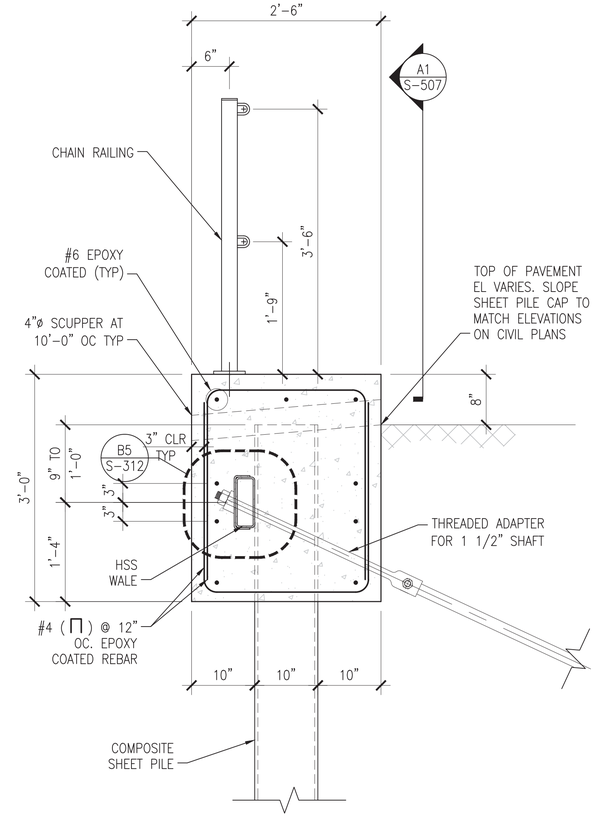

B3 PART SECTION PATRIOT'S PT

SCALE: 1" = 1'-0"

S-312

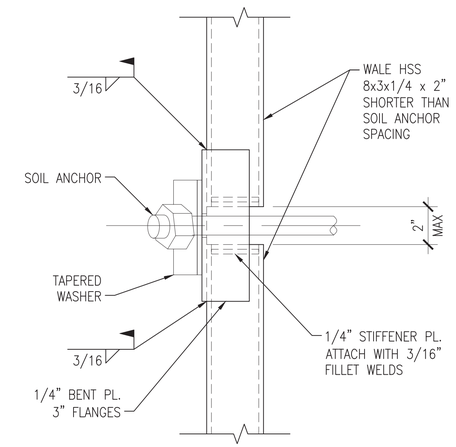

C5 PLAN DETAIL - WALE SPLICE

SCALE: 3" = 1'-0"

S-312

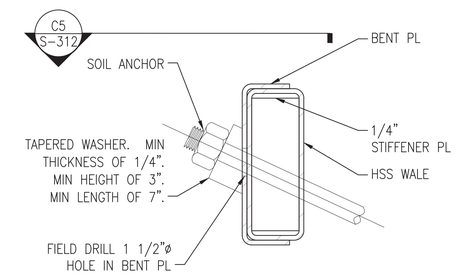

B5 SECTION - WALE SPLICE

SCALE: 3" = 1'-0"

S-312

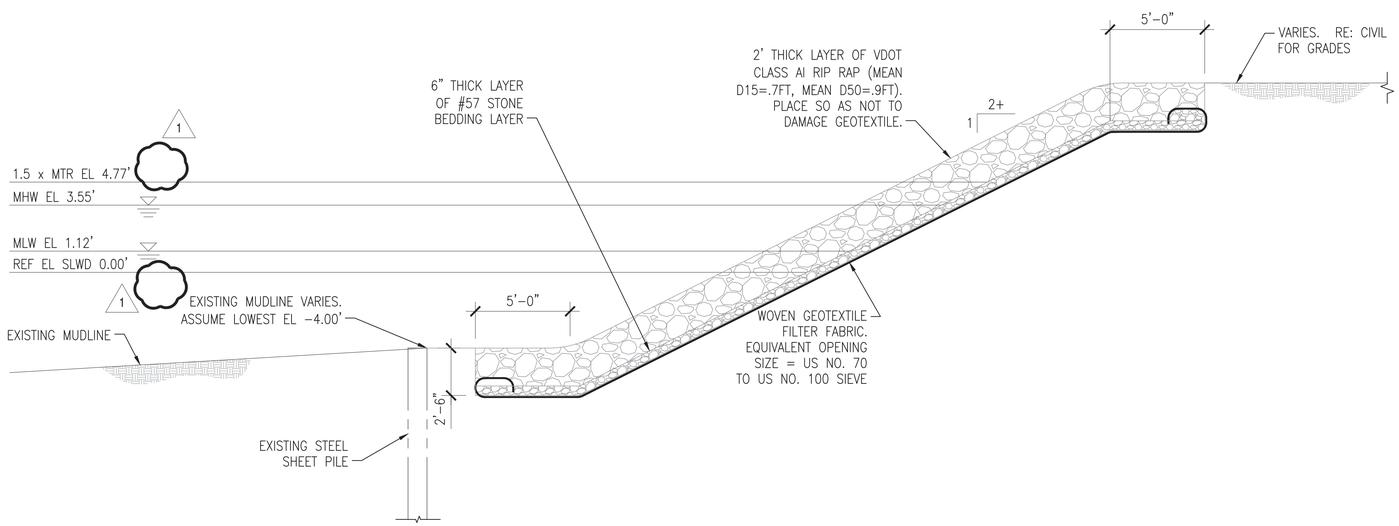

A1 SECTION PATRIOT'S PT SLOPE PROTECTION

SCALE: 1/4" = 1'-0"

S-120

GRAPHIC SCALE

1/4"=1'-0" 0' 2' 4' 8'

1"=1'-0" 0' 1/2' 1' 2'

3"=1'-0" 0 3" 6" 9"

CMR	8/12/2016	---	---	---	---	---	APPR.
		---	---	---	---	---	DATE
REVISE WATER LEVEL MARKINGS		---	---	---	---	---	DESCRIPTION
		---	---	---	---	---	SYM

NAVFAC

SEAL

A/E INFO.

APPROVED

FOR COMMANDER NAVFAC 8-11-16

ACTIVITY

DAVE SEARS

SATISFACTORY TO DATE 6/17/2016

DES ELT DRW CMR CHK CLT

DESIGN MANAGER EDDY THEISZ

BRANCH MANAGER CPT

CHIEF ENGINEER J. HASTE, P.E.

FIRE PROTECTION

DEPARTMENT OF THE NAVY
NAVAL FACILITIES ENGINEERING COMMAND
NAVAL FACILITIES ENGINEERING COMMAND–MID-ATLANTIC
HAMPTON ROADS IPT – PWD NORFOLK
NORFOLK NAVAL STATION
NORFOLK NAVAL STATION, VIRGINIA

CEP-175 AND Z-308 BULKHEAD REPAIR

SECTIONS

SCALE: AS NOTED

EPROJECT NO. 1370817

CONSTR. CONTR. NO. N/A

NAVFAC DRAWING NO. 12,729,778

SHEET 123 OF 158

S-312

DRAWFORM REVISION: 10 MARCH 2009

FILE NAME: P:\VA\NorvolStationNorfolk\Waterfront\Bulkheads\2015_1370817_CEP-1752-308Repair\B_Design\Drawings\Sheet\07_Structural\1370817_S-300 SERIES.dwg LAYOUT NAME: S-312 SECTIONS PLOTTED: Wednesday, August 10, 2016 - 11:46am USER: christine.rutkowski

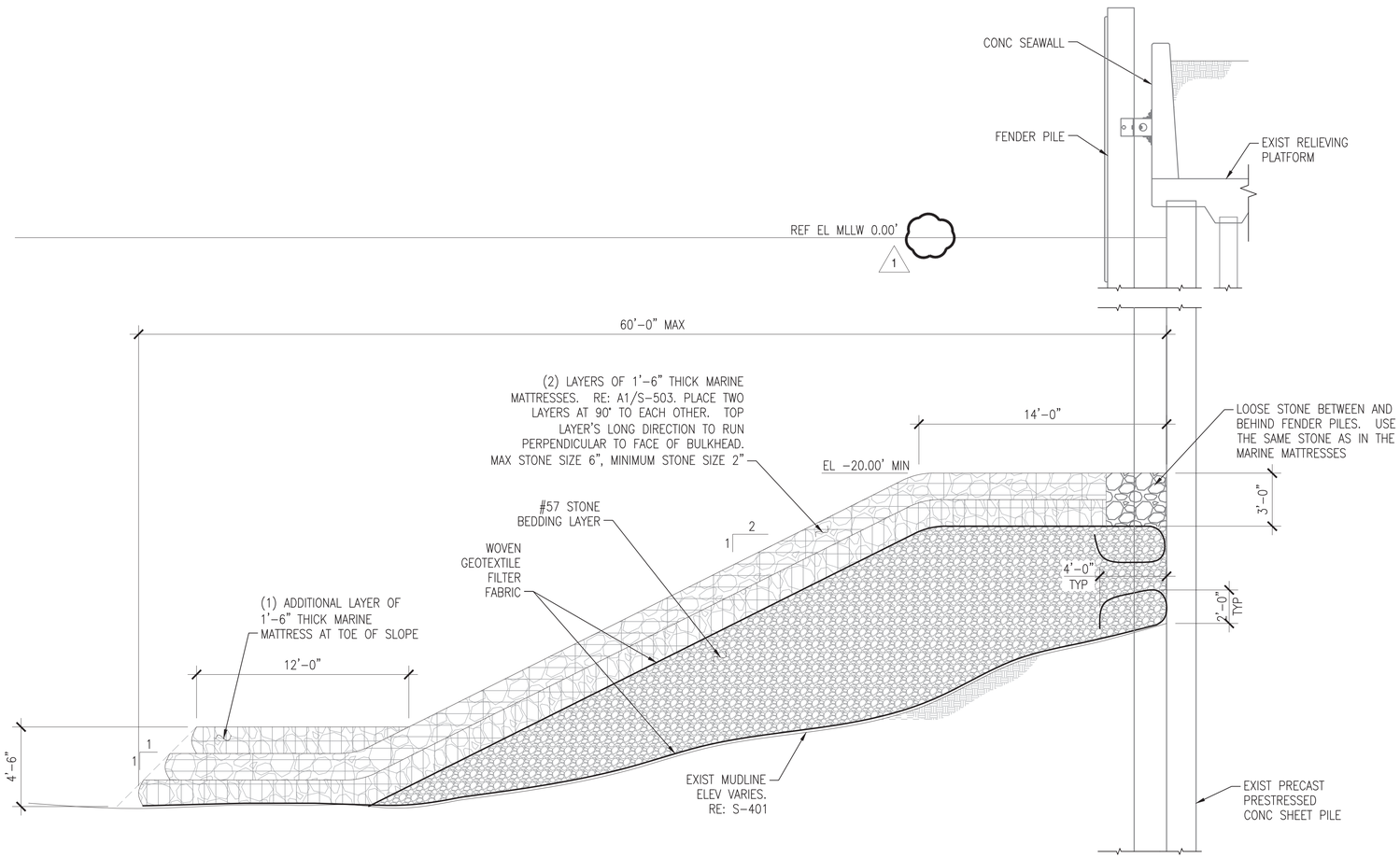

B1 CEP-175 SLOPE STABILIZATION REPAIR

SCALE: 1/4" = 1'-0"

S-306 TO S-311, S-401

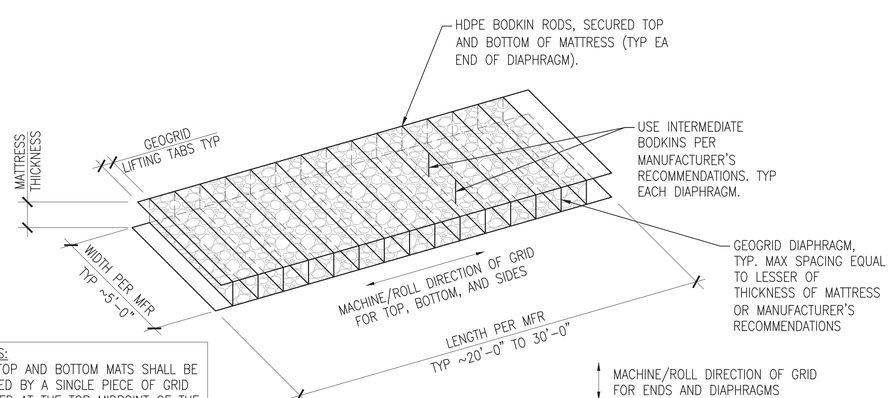

NOTES:
THE TOP AND BOTTOM MATS SHALL BE FORMED BY A SINGLE PIECE OF GRID SPLICED AT THE TOP MIDPOINT OF THE MAT BY SEAMING METHOD PER MFR RECOMMENDATIONS.

A1 TYPICAL MARINE MATTRESS

SCALE: NTS

S-503

GENERAL NOTES

1. NOTE, CONCRETE FENDER PILES SHOWN. COMPOSITE PILES SIMILAR.

GRAPHIC SCALE

1/4"=1'-0" 0' 2' 4' 8'

SYM	DESCRIPTION	DATE	APPR.
1	REMOVE WATER LEVEL MARKINGS	8/12/2016	CMR

NAVFAC

SEAL

A/E INFO

APPROVED
FOR COMMANDER NAVFAC 8-11-16

ACTIVITY
DAVE SEARS
SATISFACTORY TO DATE 6/17/2016
DES CMR DRW CMR CHK CLT
DESIGN MANAGER EDDY THEISZ
BRANCH MANAGER CRT
CHIEF ENGINEER J. HASTE, P.E.
FIRE PROTECTION

DEPARTMENT OF THE NAVY
NAVAL FACILITIES ENGINEERING COMMAND
NAVAL FACILITIES ENGINEERING COMMAND–MID-ATLANTIC
HAMPTON ROADS IPT – PWD NORFOLK
NORFOLK NAVAL STATION
NORFOLK NAVAL STATION
NORFOLK, VIRGINIA
CEP-175 AND Z-308 BULKHEAD REPAIR
TYPICAL SLOPE STABILIZATION DETAILS

SCALE: AS NOTED
EPROJECT NO. 1370817
CONSTR. CONTR. NO. N/A
NAVFAC DRAWING NO. 12,729,782
SHEET 127 OF 158
S-503

DRAWFORM REVISION: 10 MARCH 2009

FILE NAME: P:\VA\NavalStationNorfolk\Waterfront\Bulkheads\2015_1370817_CEP-175Z-308Repair\B_Design\Drawings\Sheet\07_Structural\1370817_S-500 SERIES.dwg LAYOUT NAME: S-503 TYPICAL SLOPE STABILIZATION DETAILS PLOTTED: Wednesday, August 10, 2016 - 11:46am USER: christine.rutkowski

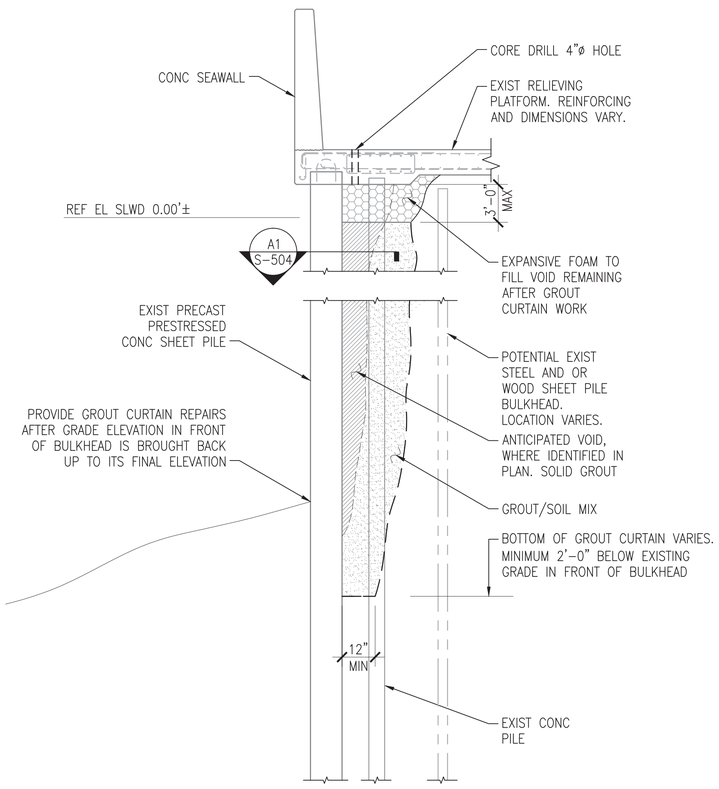

TYPICAL CEP-175 GROUT CURTAIN PROCEDURE:

1. GROUT CURTAIN INSTALLATION SHALL NOT BEGIN UNTIL ALL GAPS AND LOCATIONS OF FILL LOSS HAVE BEEN DETERMINED AND REPAIR AREAS APPROVED BY THE CONTRACTING OFFICER.
2. INSPECTION SHALL OCCUR FOR THE ENTIRE LENGTH OF THE CEP-175 BULKHEAD WALL, AND NOT JUST AT THE AREAS IDENTIFIED ON PLANS. EXTERIOR OF EXISTING SHEET PILES SHALL BE INSPECTED BY DIVERS AND ALL JOINTS PROBED TO DETERMINE IF FILL IS BEING LOST BETWEEN THE SHEETS.
3. ANY LOCATION, OUTSIDE OF THE AREAS MARKED ON PLANS, THAT HAVE THE POTENTIAL OF BECOMING A LOCATION FOR FUTURE FILL LOSS SHALL BE IDENTIFIED TO THE CONTRACTING OFFICER.
4. EXCAVATE TO EXPOSE TOP OF RELIEVING PLATFORM.
5. LOCATE ALL TIE RODS AND REINFORCING.
6. CORE DRILL 4"ø HOLE THRU RELIEVING PLATFORM @ 3'-0" OC MAX SPACING. AVOID EXISTING REINFORCING. THE SPACING OF GROUT HOLES IS DEPENDENT UPON CONTRACTORS' PROPOSED METHOD OF GROUT INJECTION. SPACING OF HOLES TO PROVIDE A CONTINUOUS, IMPERVIOUS GROUT CURTAIN SHALL BE ESTABLISHED IN THE FILED BY CONSTRUCTION OF A MINIMUM OF 1 TEST SECTION EVERY 400FT OF BULKHEAD. CONTINUITY SHALL BE VERIFIED BY TESTING TO THE SATISFACTION OF THE CONTRACTING OFFICER PRIOR TO STARTING BULKHEAD GROUTING.
7. INSERT TIP OF GROUT TUBE TO ELEVATION SHOWN AS "BOTTOM OF GROUT CURTAIN" AND BEGIN GROUTING. CONTRACTOR SHALL CONTINUOUSLY MONITOR AND PACK SHEET PILE INTERLOCK JOINTS AS NECESSARY TO PREVENT GROUT LOSS THRU THE BULKHEAD AS GROUT TUBE IS SLOWLY RAISED.
8. AT UTILITY BULKHEAD PENETRATIONS, ADJUST SPACING OF GROUT CURTAIN CELLS TO ENCOMPASS ENTIRE UTILITY LINE AND SEAL THE BULKHEAD. TO ENSURE FULL GROUTING AROUND LARGER UTILITIES, CONTRACTOR SHALL ANGLE BORE GROUT CURTAIN CELL TO ACCESS AREA AROUND UTILITY OTHERWISE INACCESSIBLE.
9. FILL THE REMAINING VOID AT THE TOP OF THE GROUT COLUMN REPAIR WITH EXPANSIVE FOAM IN ACCORDANCE WITH THE SPECIFICATIONS.
10. FILL CORE DRILLED HOLE THROUGH RELIEVING PLATFORM WITH NON-SHRINK GROUT.

B1 CEP-175 GROUT CURTAIN REPAIR

SCALE: 1/4" = 1'-0"

S-305 TO S-311

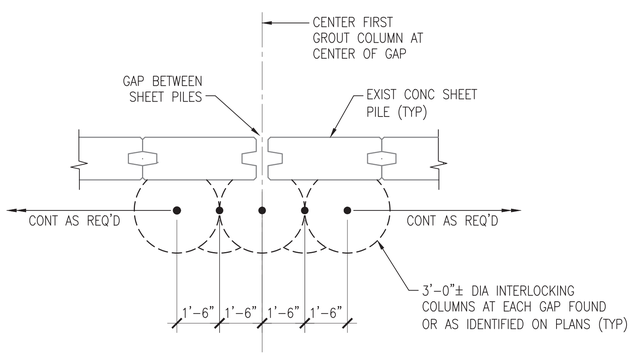

1

A1 DETAIL - GROUT CURTAIN - CEP-175

SCALE: 3/8" = 1'-0"

S-504

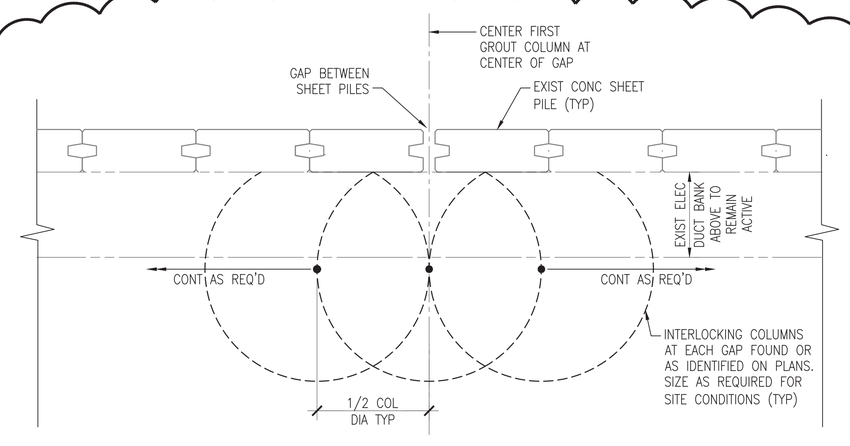

1

A2 DETAIL - GROUT CURTAIN - Z-308

SCALE: 3/8" = 1'-0"

S-302

GRAPHIC SCALE

1/4"=1'-0" 0' 2' 4' 8'

3/8"=1'-0" 0' 2' 4' 6'

	DATE	CMR
WATER LEVEL WARNINGS & ELEC DUCT CLARIFICATION	8/12/2016	APPR.

SEAL

A/E INFO

APPROVED

FOR COMMANDER NAVFAC 8-11-16

ACTIVITY

DAVE SEARS

SATISFACTORY TO DATE 6/17/2016

DES ELT DRW CMR CHK CLT

DESIGN MANAGER EDDY THEISZ

BRANCH MANAGER CJT

CHIEF ENGINEER J. HASTE, P.E.

FIRE PROTECTION

DEPARTMENT OF THE NAVY
NAVAL FACILITIES ENGINEERING COMMAND
HAMPTON ROADS IPT - PWD NORFOLK
NAVAL FACILITIES ENGINEERING COMMAND-MID-ATLANTIC
NORFOLK NAVAL STATION
NORFOLK NAVAL STATION
NORFOLK, VIRGINIA

CEP-175 AND Z-308 BULKHEAD REPAIR

TYPICAL GROUT CURTAIN DETAILS

SCALE: AS NOTED

EPROJECT NO. 1370817

CONSTR. CONTR. NO. N/A

NAVFAC DRAWING NO. 12,729,783

SHEET 128 OF 158

S-504

DRAWFORM REVISION: 10 MARCH 2009

FILE NAME: P:\VA\NavalStationNorfolk\Waterfront\Bulkheads\2015_1370817_CEP-175Z-308Repair\B_Design\Drawings\Sheet\07_Structural\1370817_S-500 SERIES.dwg LAYOUT NAME: S-504 TYPICAL GROUT CURTAIN DETAILS PLOTTED: Wednesday, August 10, 2016 - 11:46am USER: christine.rutkowski

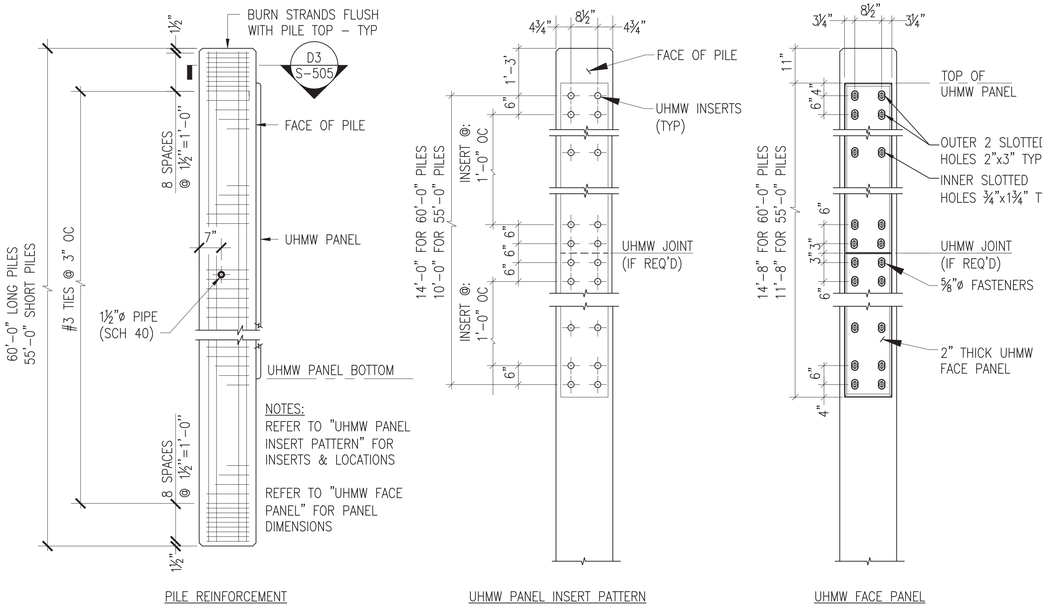

C1 PRESTRESSED FENDER PILE - ELEVATIONS & SECTIONS

SCALE: 1/2" = 1'-0"

S-101 TO S-107, S-111A TO S-115

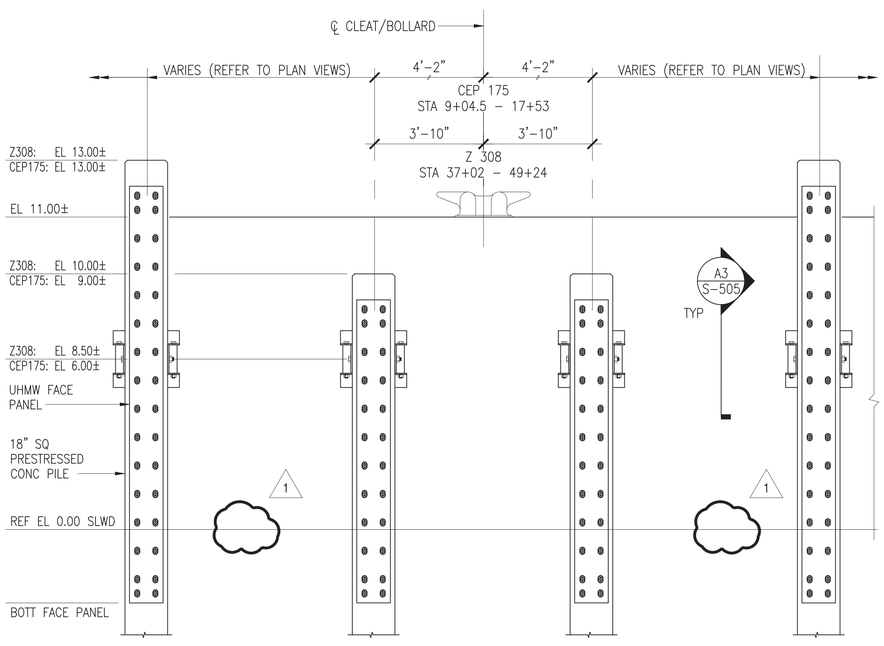

A1 ELEVATION - PRESTRESSED FENDER PILES AT MOORING FIXTURES

SCALE: 3/8" = 1'-0"

S-101 TO S-107, S-111A TO S-115

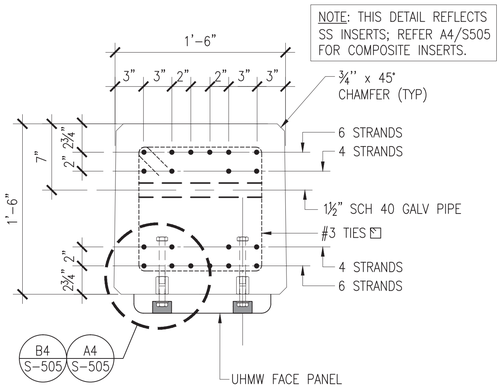

D3 PLAN - FENDER PILE SECTION

SCALE: 1 1/2" = 1'-0"

S-505

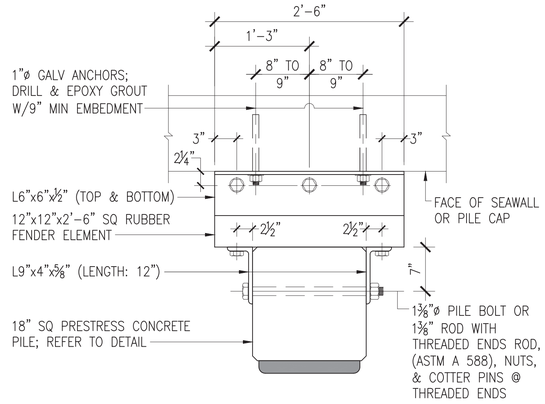

B3 PLAN - PRESTRESSED FENDER PILE BRACKETS

SCALE: 1" = 1'-0"

S-505

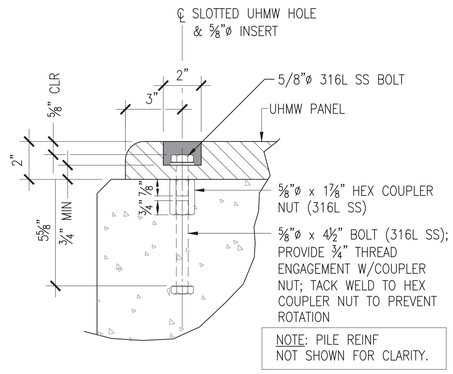

B4 DETAIL - STAINLESS STEEL INSERT

SCALE: 3" = 1'-0"

S-505

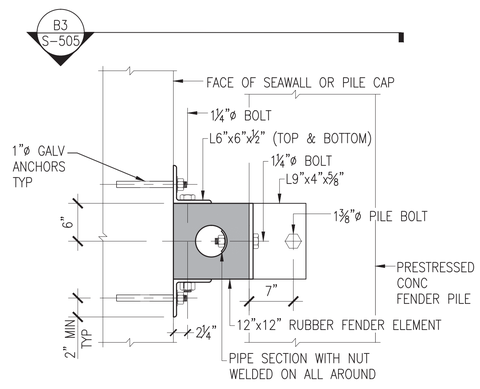

A3 ELEVATION - PRESTRESSED PILE BRACKETS

SCALE: 1" = 1'-0"

S-505

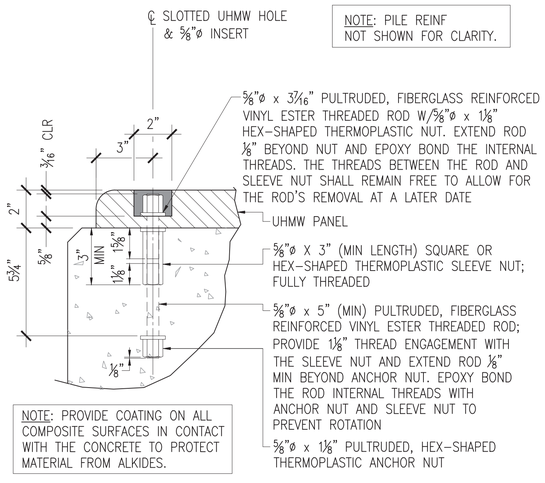

A4 DETAIL - COMPOSITE INSERT

SCALE: 3" = 1'-0"

S-505

GENERAL SHEET NOTES

1. MINIMUM CONCRETE STRENGTH f'c=8000 PSI @ 28 DAY
2. TRANSFER OF PRESTRESSING FORCE @ f'c=5600 PSI OF CONCRETE STRENGTH
3. PRESTRESSING STEEL SHALL BE 20 – ½"ø 270 KSI SEVEN WIRE, UNCOATED, LOW RELAXATION STRANDS. STRAND DIMENSIONS MAY BE ADJUSTED TO ENSURE CLEARANCE OF UHMW INSERTS WITH CONTRACTING OFFICERS PRIOR APPROVAL.
4. #3 ⊠ TIES SHALL CONFORM TO ASTM A615, GRADE 60.
5. RESIDUAL FINAL PRESTRESS AFTER LOSSES SHALL NOT BE LESS THAN 600 PSI.
6. INSTALL PILES WITH INSERTS FACING AWAY FROM THE PIER.
7. THERE SHALL BE (2) DIFFERENT TYPES OF INSERT ASSEMBLIES AND UHMW FASTENERS PROVIDED WITH THE FENDER PILES. Z-308 PILES SHALL BE PROVIDED WITH ALL 316L STAINLESS STEEL MATERIAL ("DETAIL B4") AND CEP-175 PILES SHALL HAVE ALL COMPOSITE MATERIAL ("DETAIL A4"). REFER TO CONTRACT SPECIFICATIONS FOR ADDITIONAL INFORMATION.
8. UHMW IS INTENDED TO BE PROVIDED IN ONE CONTINUOUS SHEET, BUT MAY BE PROVIDED IN (2) SECTIONS. JOINT SHALL NOT OCCUR BETWEEN ELEVATIONS +6.0' AND –2.0'. ADDITIONAL INSERTS/BOLTS SHALL BE REQUIRED AT JOINT LOCATION.
9. FORM AND PLACE EPOXY SEALER ON TOP OF THE PILE.

PILE BID LENGTHS:

a) LONG: 60'-0" FOR PRESTRESSED FENDER PILES WITH TOP EL 13.00'
b) SHORT: 55'-0" FOR PRESTRESSED FENDER PILES WITH TOP EL 10.00' OR 9.00'

NOTE: THE 3" LONG COMPOSITE SLEEVE NUT IS NOT A COMMERCIALLY AVAILIBLE STANDARD LENGTH.

SYM	DESCRIPTION	DATE	APPR.
	REMOVE WATER LEVEL WARNINGS	8/12/2016	CMR

NAVFAC

SEAL

A/E INFO

APPROVED
FOR COMMANDER NAVFAC 8-11-16

ACTIVITY
DAVE SEARS
SATISFACTORY TO DATE 6/17/2016
DES ELT DRW ELT CHK CLT
DESIGN MANAGER EDDY THEISZ
BRANCH MANAGER CAT
CHIEF ENGINEER J. HASTE, P.E.
FIRE PROTECTION

DEPARTMENT OF THE NAVY
NAVAL FACILITIES ENGINEERING COMMAND
HAMPTON ROADS IPT – PWD NORFOLK
NAVAL FACILITIES ENGINEERING COMMAND–MID-ATLANTIC
NORFOLK NAVAL STATION
NORFOLK NAVAL STATION, NORFOLK, VIRGINIA

CEP-175 AND Z-308 BULKHEAD REPAIR

CONCRETE FENDER SYSTEM DETAILS

SCALE: AS NOTED
EPROJECT NO. 1370817
CONSTR. CONTR. NO. N/A
NAVFAC DRAWING NO. 12,729,784
SHEET 129 OF 158
S-505

DRAWFORM REVISION: 10 MARCH 2009

FILE NAME: P:\VA\NorfolkStationNorfolk\Waterfront\Bulkheads\2015_1370817_CEP-175Z-308Repair\B_Design\Drawings\Sheet\07_Structural\S-110 FENDER SYSTEM REPAIRS.dwg LAYOUT NAME: S-505 CONCRETE FENDER SYSTEM DETAILS PLOTTED: Wednesday, August 10, 2016 – 11:46am USER: christine.rutkowski

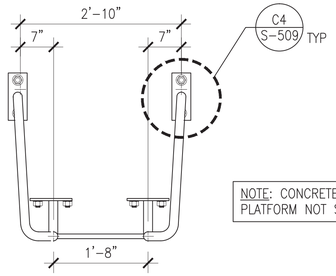

NOTE: CONCRETE CURBING AND LANDING PLATFORM NOT SHOWN FOR CLARIFY.

C1 PLAN - LADDER

SCALE: 3/4" = 1'-0" S-508, S-509

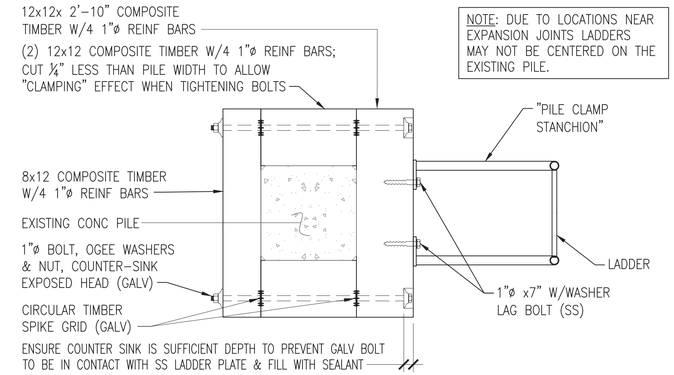

NOTE: DUE TO LOCATIONS NEAR EXPANSION JOINTS LADDERS MAY NOT BE CENTERED ON THE EXISTING PILE.

C2 SECTION - SINGLE PILE CLAMP

SCALE: 3/4" = 1'-0" S-508

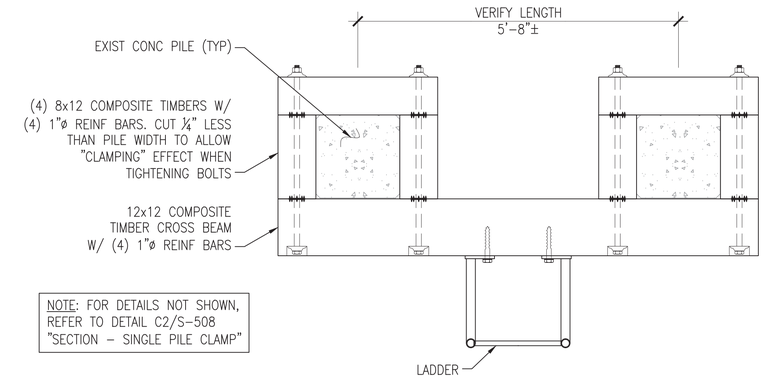

NOTE: FOR DETAILS NOT SHOWN, REFER TO DETAIL C2/S-508 "SECTION – SINGLE PILE CLAMP"

C4 SECTION - MULTI PILE CLAMP

SCALE: 3/4" = 1'-0" S-508

NOTE: SINGLE PILE CLAMP SHOWN. FOR MULTI PILE CLAMP, RE: C4/S-508.

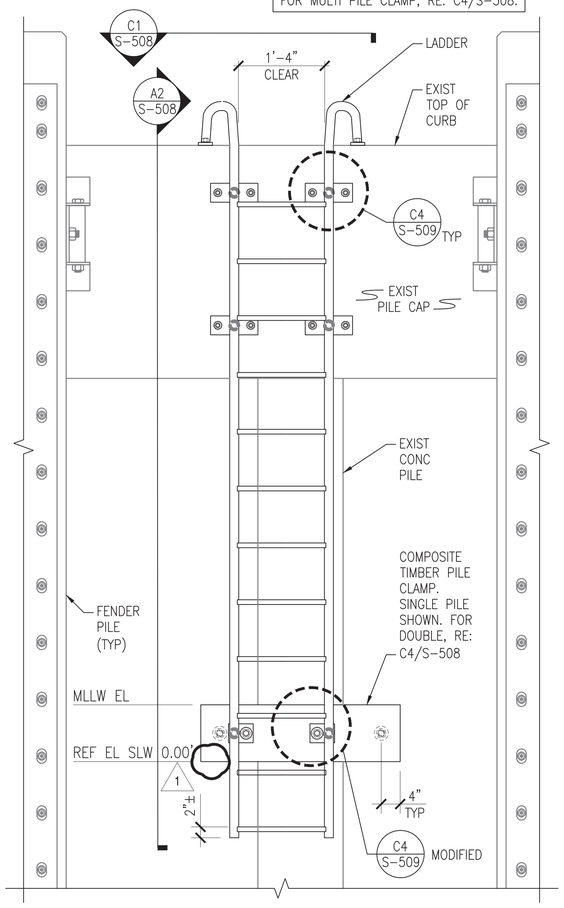

A1 ELEVATION - Z-308 LADDER

SCALE: 3/4" = 1'-0" S-101, S-102, S-105, S-107

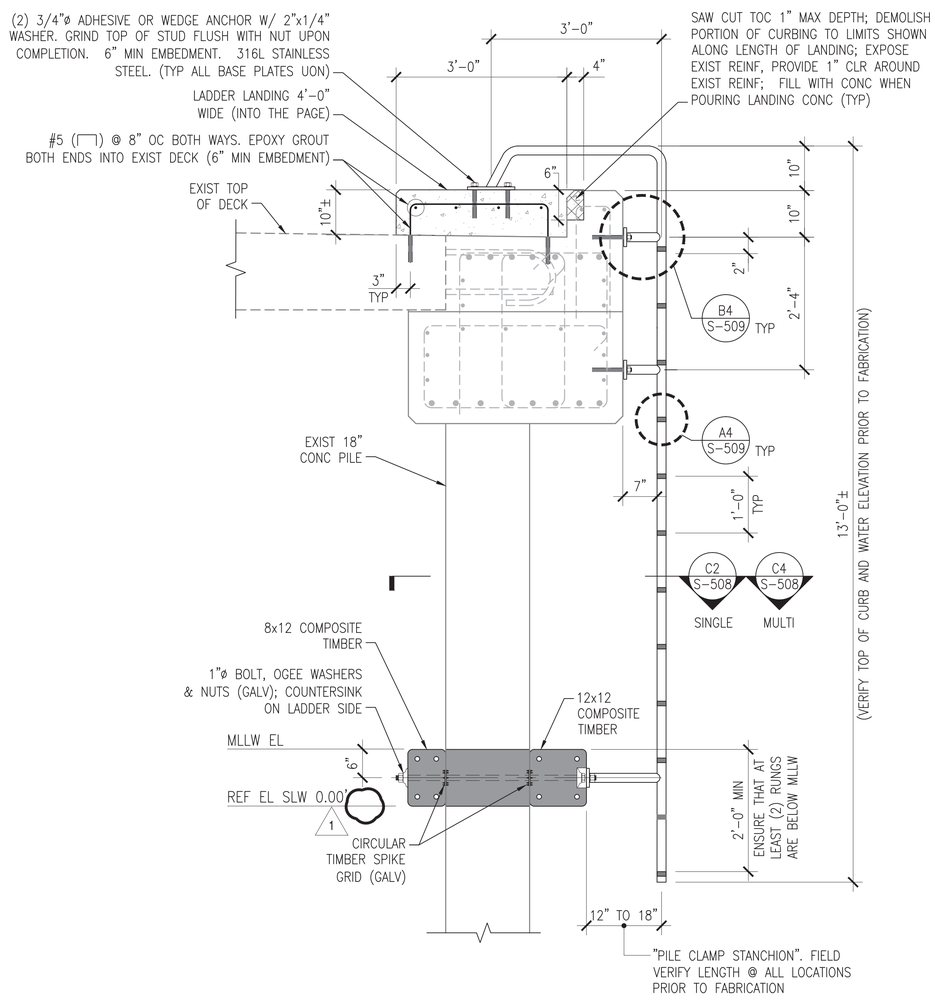

A2 SECTION - Z-308 LADDER

SCALE: 3/4" = 1'-0" S-508

GENERAL SHEET NOTES

1. VERIFY EXISTING FIELD CONDITIONS AND OBTAIN ACCURATE FIELD MEASUREMENTS PRIOR TO FABRICATION OF LADDER STANCHIONS AND COMPOSITE TIMBERS. DUE TO VARIANCES IN THE EXISTING CONSTRUCTION, DIMENSIONS MAY NOT BE THE SAME AT ALL LOCATIONS.
2. ALL STEEL DETAILED ON THIS SHEET SHALL BE 316L STAINLESS STEEL, INCLUDING BUT NOT LIMITED TO PIPES, ANCHORS, PLATES, BOLTS, ETC. UON.

GRAPHIC SCALE

3/4"=1'-0" 0 1' 2' 3'

SYM	DESCRIPTION	DATE	APPR.
---	---	---	---
---	---	---	---
---	---	---	---
---	---	---	---
---	---	---	---
---	---	---	---
---	---	---	---

REVISE WATER LEVEL MARKINGS 8/12/2016 CMR

NAVFAC

SEAL

A/E INFO.

APPROVED FOR COMMANDER NAVFAC 8-11-16

ACTIVITY DAVE SEARS

SATISFACTORY TO DATE 6/17/2016

DES ELT DFW CMR CHK CLT

DESIGN MANAGER EDDY THEISZ

BRANCH MANAGER CAT

CHIEF ENGINEER J. HASTE, P.E.

FIRE PROTECTION

DEPARTMENT OF THE NAVY
NAVAL FACILITIES ENGINEERING COMMAND
HAMPTON ROADS IPT – PWD NORFOLK
NAVAL FACILITIES ENGINEERING COMMAND–MID-ATLANTIC
NORFOLK NAVAL STATION
NORFOLK NAVAL STATION, NORFOLK, VIRGINIA

CEP-175 AND Z-308 BULKHEAD REPAIR

LADDER DETAILS

SCALE: AS NOTED
EPROJECT NO. 1370817
CONSTR. CONTR. NO. N/A
NAVFAC DRAWING NO. 12,729,787
SHEET 132 OF 158

S-508

DRAWFORM REVISION: 10 MARCH 2009

FILE NAME: P:\VA\NorfolkStationNorfolk\Waterfront\Bulkheads\2015_1370817_CEP-1752-308Repair\B_Design\Drawings\Sheet\01_Structural\1370817_S-507.dwg LAYOUT NAME: S-508 LADDER DETAILS PLOTTED: Wednesday, August 10, 2016 – 11:46am USER: christine.rutkowski

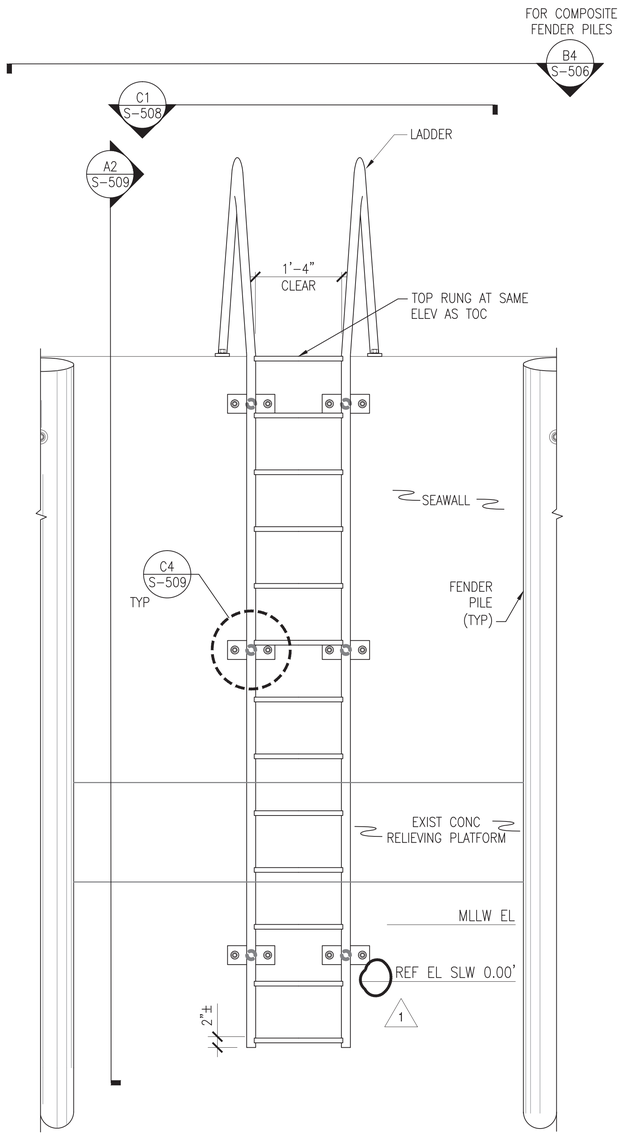

A1 ELEVATION - CEP-175 LADDER

SCALE: 3/4" = 1'-0" S-109, S-110, S-111A, S-113, S-115, S-117, S-119, S-506

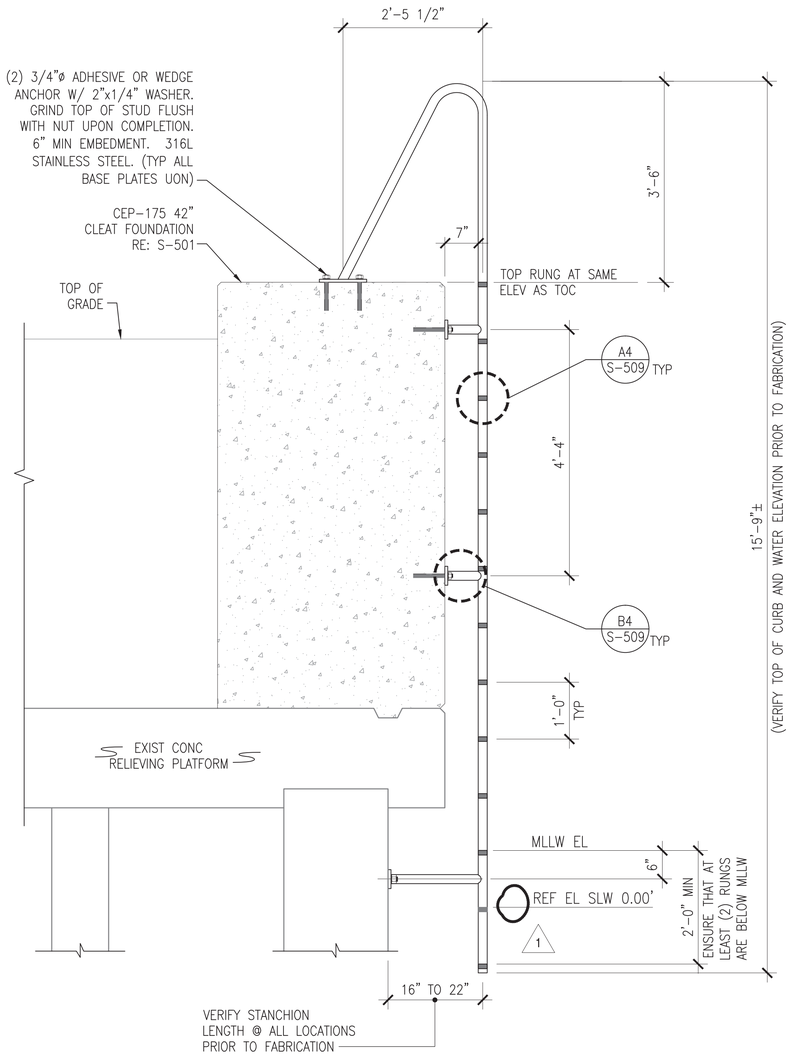

A2 SECTION - CEP-175 LADDER

SCALE: 3/4" = 1'-0" S-509

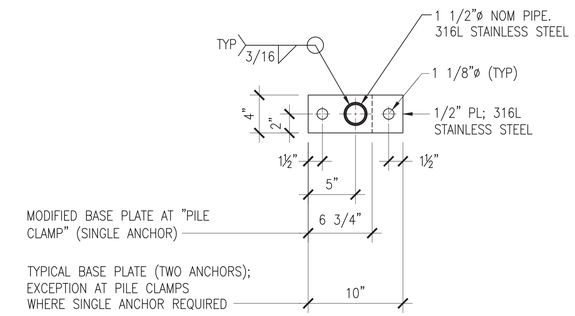

C4 DETAIL - RAIL & STANCHION BASE PLATE

SCALE: 1 1/2" = 1'-0" S-508, S-509

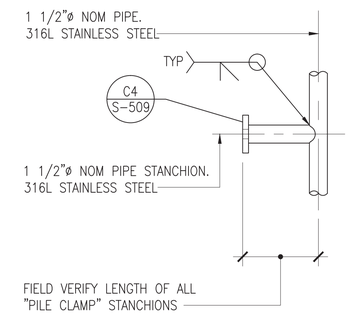

B4 DETAIL - LADDER STANCHION

SCALE: 1 1/2" = 1'-0" S-508, S-509

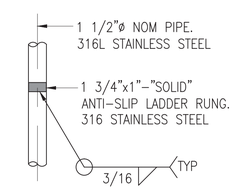

A4 DETAIL - LADDER RUNG

SCALE: 1 1/2" = 1'-0" S-508, S-509

GENERAL SHEET NOTES

1. VERIFY EXISTING FIELD CONDITIONS AND OBTAIN ACCURATE FIELD MEASUREMENTS PRIOR TO FABRICATION OF LADDER STANCHIONS AND COMPOSITE TIMBERS. DUE TO VARIANCES IN THE EXISTING CONSTRUCTION, DIMENSIONS MAY NOT BE THE SAME AT ALL LOCATIONS.
2. ALL STEEL DETAILED ON THIS SHEET SHALL BE 316L STAINLESS STEEL, INCLUDING BUT NOT LIMITED TO PIPES, ANCHORS, PLATES, BOLTS, ETC. UON.

GRAPHIC SCALE

3/4"=1'-0" 0 1' 2' 3'

1-1/2"=1'-0" 0 6" 1' 1'-6"

SYM	DESCRIPTION	DATE	APPR.
---	---	---	---
---	---	---	---
---	---	---	---
---	---	---	---
---	---	---	---
---	---	---	---
---	---	---	---
---	---	---	---

REMOVE WATER LEVEL WARNINGS 8/12/2016 CMR

NAVFAC

SEAL

A/E INFO

APPROVED

FOR COMMANDER NAVFAC 8-11-16

ACTIVITY DAVE SEARS

SATISFACTORY TO DATE 6/17/2016

DES ELT DFW CMR CHK CLT

DESIGN MANAGER EDDY THEISZ

BRANCH MANAGER CAT

CHIEF ENGINEER J. HASTE, P.E.

FIRE PROTECTION

DEPARTMENT OF THE NAVY
NAVAL FACILITIES ENGINEERING COMMAND
HAMPTON ROADS IPT - PWD NORFOLK
NAVAL FACILITIES ENGINEERING COMMAND-MID-ATLANTIC
NORFOLK NAVAL STATION
NORFOLK NAVAL STATION NORFOLK, VIRGINIA

CEP-175 AND Z-308 BULKHEAD REPAIR

LADDER DETAILS

SCALE: AS NOTED

EPROJECT NO. 1370817

CONSTR. CONTR. NO. N/A

NAVFAC DRAWING NO. 12,729,788

SHEET 133 OF 158

S-509

DRAWFORM REVISION: 10 MARCH 2009

FILE NAME: P:\VA\NorfolkStationNorfolk\Waterfront\Bulkheads\2015_1370817_CEP-1752-308Repair\Drawings\Sheet\01_Structural\1370817_S-507.dwg LAYOUT NAME: S-509 LADDER DETAILS PLOTTED: Wednesday, August 10, 2016 - 11:46am USER: christine.rutkowski