REVISIONS			
SYM.	DESCRIPTION	DATE	APPROVED

AFDL-47 MOORING FACILITIES

NAVAL STATION , NORFOLK, VIRGINIA

INDEX OF DRAWINGS

SHEET NO.		EFD	NAVFAC	TITLE
1	T-1	154275	4054275	TITLE SHEET
2	D-1	154276	4054276	AFDL SOUNDING - DREDGING PLAN
3	D-2	154277	4054277	AFDL SOUNDING - DREDGING PLAN
4	C-1	154278	4054278	EXISTING SITE AND UTILITIES
5	C-2	154279	4054279	UTILITIES SITE PLAN
6	C-3	154280	4054280	GRADING PLAN
7	C-4	154281	4054281	SITE PLAN
8	B-1	154282	4054282	SOIL BORINGS
9	B-2	154283	4054283	SOIL BORINGS
10	A-1	154284	4054284	ELECT VAULT AND AIR COMPRESSOR ROOM PLAN & SECTIONS
11	A-2	154285	4054285	ELECTRICAL VAULT AND AIR COMPRESSOR ROOM DETAILS
12	S-1	154286	4054286	PIER LAYOUT
13	S-2	154287	4054287	TEE PIER - SECTIONS
14	S-3	154288	4054288	APPROACHWAY SECTIONS & DETAILS
15	S-4	154289	4054289	APPROACHWAY SECTIONS & DETAILS
16	S-5	154290	4054290	TEE PIER REINFORCEMENT DETAILS
17	S-6	154291	4054291	TEE PIER REINFORCEMENT DETAILS
18	S-7	154292	4054292	SERVICE OUTLETS - PLAN & SECTIONS
19	S-8	154293	4054293	TEE PIER - MISCELLANEOUS DETAILS
20	S-9	154294	4054294	MOORING BRACKET GUIDE & MISCELLANEOUS DETAILS
21	S-10	154295	4054295	ELECTRIC SUB-STATION BUILDING - PILE & FLOOR PLAN & DET.

SHEET NO.		EFD	NAVFAC	TITLE
22	S-11	154296	4054296	ELECTRICAL SUB-STATION BUILDING - TYPICAL SECTIONS
23	S-12	154297	4054297	BREAKWATER SECTIONS, PLAN & DETAIL
24	S-13	154298	4054298	BULKHEAD - SITE PLAN
25	S-14	154299	4054299	BULKHEAD - PLAN
26	S-15	154300	4054300	BULKHEAD - SECTIONS
27	S-16	154301	4054301	BULKHEAD - SECTIONS
28	S-17	154302	4054302	BULKHEAD - MISCELLANEOUS
29	M-1	154303	4054303	TEE PIER - UTILITIES PLAN
30	M-2	154304	4054304	SERVICE POINTS - PLAN
31	M-3	154305	4054305	SERVICE POINTS - TYPICAL SECTIONS
32	M-4	154306	4054306	TEE PIER-STEAM & MISCELLANEOUS DETAILS
33	M-5	154307	4054307	STEAM & COMPRESSED AIR - PLAN & PROFILE
34	M-6	154308	4054308	ON SHORE STEAM DETAILS
35	M-7	154309	4054309	ON SHORE STEAM MANHOLES
36	M-8	154310	4054310	ELECT. SUB-STATION BLDG. - VENTILATION & AIR COMPRESSOR
37	E-1	154311	4054311	GENERAL SITE PLAN
38	E-2	154312	4054312	GENERAL PLAN - TEE PIER
39	E-3	154313	4054313	ON SHORE SITE PLAN - PROFILE & DETAILS
40	E-4	154314	4054314	SINGLE LINE & POWER OUTLET ASSEMBLY DIAGRAM
41	E-5	154315	4054315	CONTROL DIAGRAM PANEL BOARD & FIXTURE SCHEDULE
42	E-6	154316	4054316	ELECT. SUB-STATION/AIR COMPRESSOR BLDG. - CONDUIT DUCTS
43	E-7	154317	4054317	TEE PIER MANHOLE PLAN & SECTIONS
44	E-8	154318	4054318	POWER OUTLET ASSEMBLY EAST
45	E-9	154319	4054319	POWER OUTLET ASSEMBLY WEST
46	E-10	154320	4054320	MISCELLANEOUS DETAILS
47	E-11	154321	4054321	ELECT. SUB. STA/AIR COMPRESSOR BLDG-POWER LIGHT, GND. PLAN
48	E-12	154322	4054322	MISCELLANEOUS DETAILS

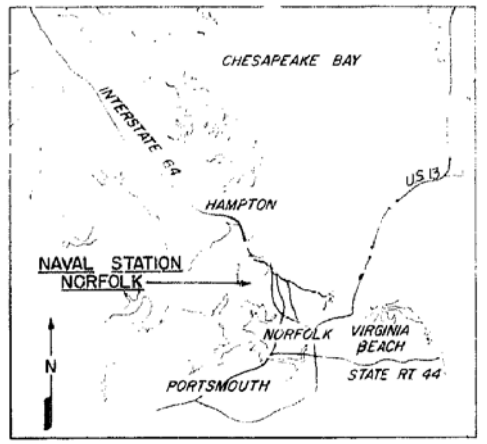

VICINITY MAP
NO SCALE

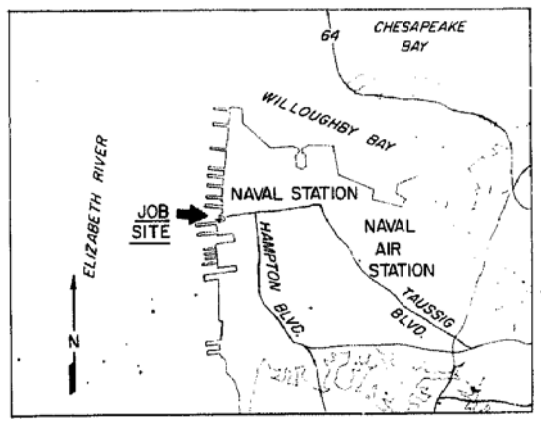

LOCATION MAP
NO SCALE

NUMBER INDICATES SECTION — LETTER INDICATES DETAIL
SHEET NUMBER WHERE SECTION IS TAKEN — SHEET NUMBER WHERE SECTION IS DRAWN
SECTION DETAIL SYMBOL

LEGEND

T	TITLE SHEET	A	ARCHITECTURAL
D	DREDGING PLAN	S	STRUCTURAL
C	CIVIL	M	MECHANICAL
B	SOIL BORING	E	ELECTRICAL

RECORD DRAWING
LETTER DATED 8 SEP 1982

T-1

S.T. HUDSON ENGINEERS, INC.
511 S. BROAD STREET
PHILADELPHIA, PA.

DEPARTMENT OF THE NAVY NAVAL FACILITIES ENGINEERING COMMAND
ATLANTIC DIVISION
NAVAL STATION NORFOLK, VIRGINIA

DES. P.L. DR. P.LOWE CHK. R.C.F.
PROJ. MGR. A.L.S. CH. ENGR. A.G.F.
SUBMITTED BY: DATE:
FIRM MEMBER PRINCIPAL
EFD: P.W. R.V.C.
NO. DIV.
APPROVED DATE
OFFICER IN CHARGE
ACTING VICE COMMANDER NAVFAC

NAVAL STATION NORFOLK, VA.
AFDL-47 MOORING FACILITIES
TITLE SHEET

SIZE F | CODE IDENT. NO. 80091 | NAVFAC DRAWING NO. 4054275
SCALE NONE | SPEC. 05-77-7576 | CONTR. CONTR. NO. N62470-77-B-7576 | SHEET 1 OF 48
EFD DWG. NO. 154275

SAMUEL T. HUDSON NO. 7957 REGISTERED PROFESSIONAL ENGINEER COMMONWEALTH OF PENNSYLVANIA

RECORD DRAWING

LETTER DATED & SEE 1382

ID-1

S.T. HUDSON ENGINEERS, INC.
21 E. BROAD STREET
PHILADELPHIA, PA.

NAVAL FACILITIES ENGINEERING COMMAND
NAVAL STATION **ATLANTIC DIVISION** NORFOLK, VIRGINIA

AFDL-47 MOORING FACILITIES

SOUNDING DREDGING PLAN

SCALE 1"=40' | DATE 03-17-76 | SHEET 2 OF 43

CONTR. CONTR. NO. N62470-77 8-7376 | SIZE D | CODE IDENT. NO. F 80091 | DRAWING NO. 4054276

ESTIMATE OF DREDGE QUANTITIES - CUBIC YARDS

AREA	DEPTHS	QUANTITY TO PROJECT DEPTH	TWO (2) FEET OVERDEPTH	TOTAL	
'A'	-52	182,000 (A)	4500 (A)	186,500 (A)	
'B'	-36	53,000 (A)	6,500 (A)	59,500 (A)	
TOTAL		235,851 (A)	8,195 (A)	224,046 (A)	

QUANTITIES ARE BASED ON PLACE MEASUREMENTS AND INCLUDE MATERIAL IN PIERS 3 TO PIER 6 DOCKS.

GENERAL NOTES

1. SOUNDINGS ARE IN FEET AND TENTHS, AND ARE REFERRED TO STATION LOW WATER DATUM, WHICH IS 5.18± FEET BELOW NATIONAL GEODETIC VERTICAL DATUM OF 1972. SOUNDINGS WERE TAKEN ON A CONTINUOUS RECORDING FATHOMETER.
2. MEAN HIGH WATER = +3.06'±
   MEAN LOW WATER = +1.82'±
   MEAN SEA LEVEL = +1.82'±
   * BASED ON N.O.S. AND STATION DATUM.
3. SOUNDINGS WERE TAKEN ON MARCH 2, 1976.
4. CONTRACTOR SHALL INSURE ALL RIP-RAP IN LINE WITH THE EXISTING "ROCK BREAKWATER") EXTENDING WESTERLY, EASTERLY & SOUTHERLY FROM TOE OF THE NEW CONC. SHEET PILE BREAKWATER IS REMOVED. APPROXIMATELY 10,500 CUBIC YARD OF ROCK, RUBBLE REMAINING AFTER THE NEW BREAKWATER IS INSTALLED TO BE DEPOSITED ALONG THE SOUTHERLY SIDE OF THE EXISTING EAST-WEST BREAKWATER.
5. CONTRACTOR SHALL EXERCISE EXTREME CARE IN DREDGING WITHIN THE FLEET LANDING AREA TO PREVENT DAMAGE TO THE BIGOTT'S PILING AND PLANTS.
6. CONTRACTOR SHALL INSURE ALL RIP-RAP IN LINE WITH THE NEW 360 L.F. BULKHEAD IS REMOVED AND DEPOSITED ALONG THE SOUTHERLY FACE OF THE EXISTING EAST-WEST BREAKWATER

PLAN
Scale: 1"=60'-0"

SECTION A (D1-D1)
Scale: VERT. 1"=10'-0"
HOR'Z. 1"=50'-0"

AFTER ROCK REMOVAL, BULKHEAD INSTALLATION, DREDGING & BREAKWATER INSTALLATION.

FROM N.O.A.A. CHART 12248
LOCATION MAP
No Scale

GRAPHIC SCALE
1"=10'-0" 1"=20'-0" 1"=50'-0"

REVISIONS			
SYM.	DESCRIPTION	DATE	APPROVED
A	REVISED AS-BUILT		

REVISIONS			
SYM.	DESCRIPTION	DATE	APPROVED
(A)	REVISED AS-BUILT	[illegible]	[illegible]

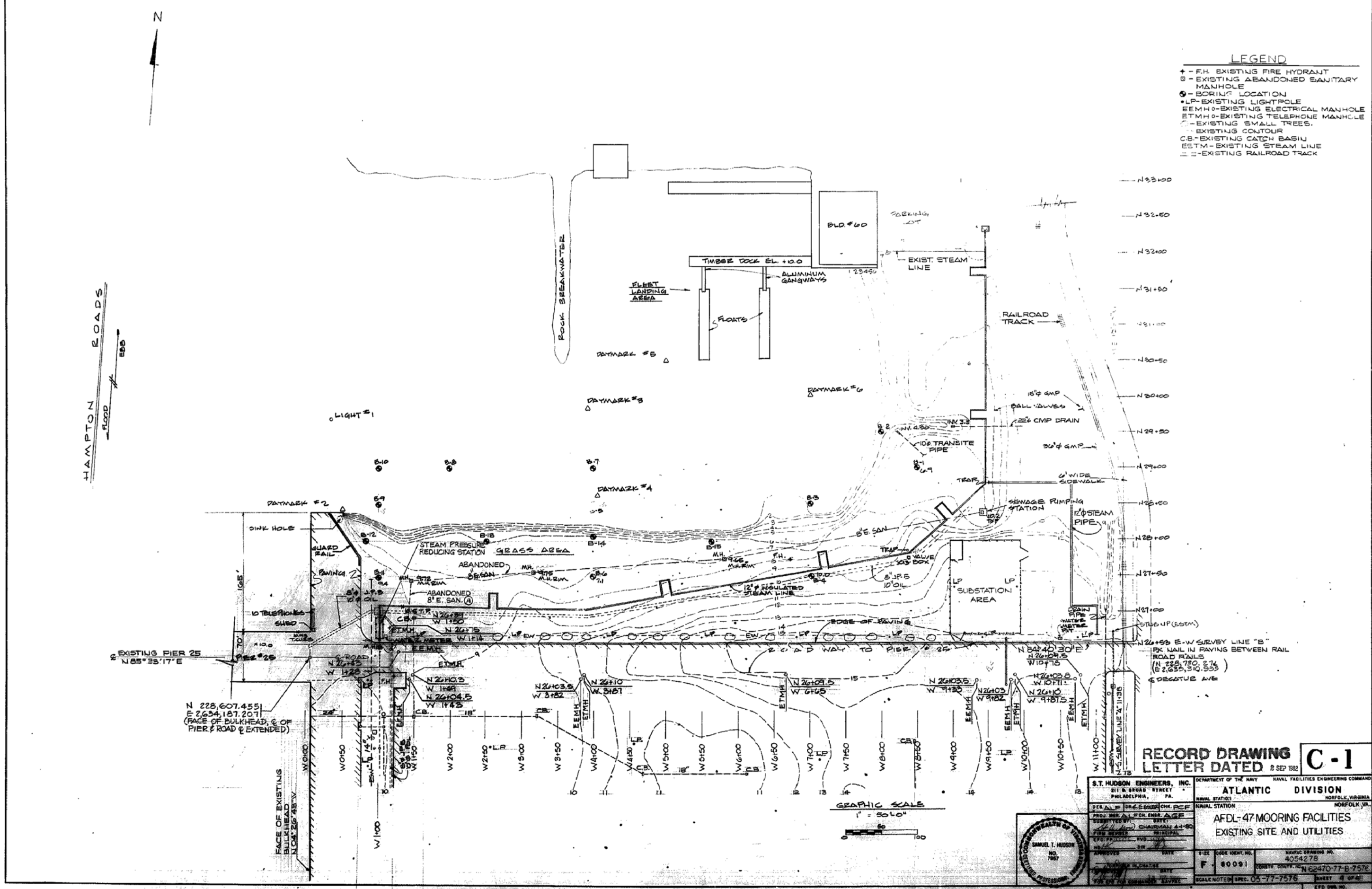

RECORD DRAWING LETTER DATED 2 SEP 1982

C-1

S.T. HUDSON ENGINEERS, INC.
211 S. BROAD STREET
PHILADELPHIA, PA.

DEPARTMENT OF THE NAVY — NAVAL FACILITIES ENGINEERING COMMAND
ATLANTIC DIVISION
NAVAL STATION — NORFOLK, VIRGINIA

DES. ALF | DR. F.E. ESSER | CHK. PCF
PROJ. MGR. ALF | CH. ENGR. AGF
SUBMITTED BY: | DATE: CHAIRMAN 4-1-80
FIRM MEMBER | PRINCIPAL
EFD: PP | RVD
NO. | DIN
APPROVED | DATE
FOR EFD FOR COMMANDER NAVFAC

NAVAL STATION — NORFOLK, VA.

AFDL-47 MOORING FACILITIES
EXISTING SITE AND UTILITIES

SIZE F | CODE IDENT. NO. 80091 | NAVFAC DRAWING NO. 4054278
CONSTR. CONTR. NO. N 62470-77-B-7576
SCALE NOTED | SPEC. 05-77-7576 | SHEET 4 OF 48
EFD DWG. NO. 154278

COMMONWEALTH OF VIRGINIA
SAMUEL T. HUDSON
NO. 7957
CERTIFIED PROFESSIONAL ENGINEER

REVISIONS			
SYM.	DESCRIPTION	DATE	APPROVED
(A)	REVISED AS-BUILT	1/29/82	WRG

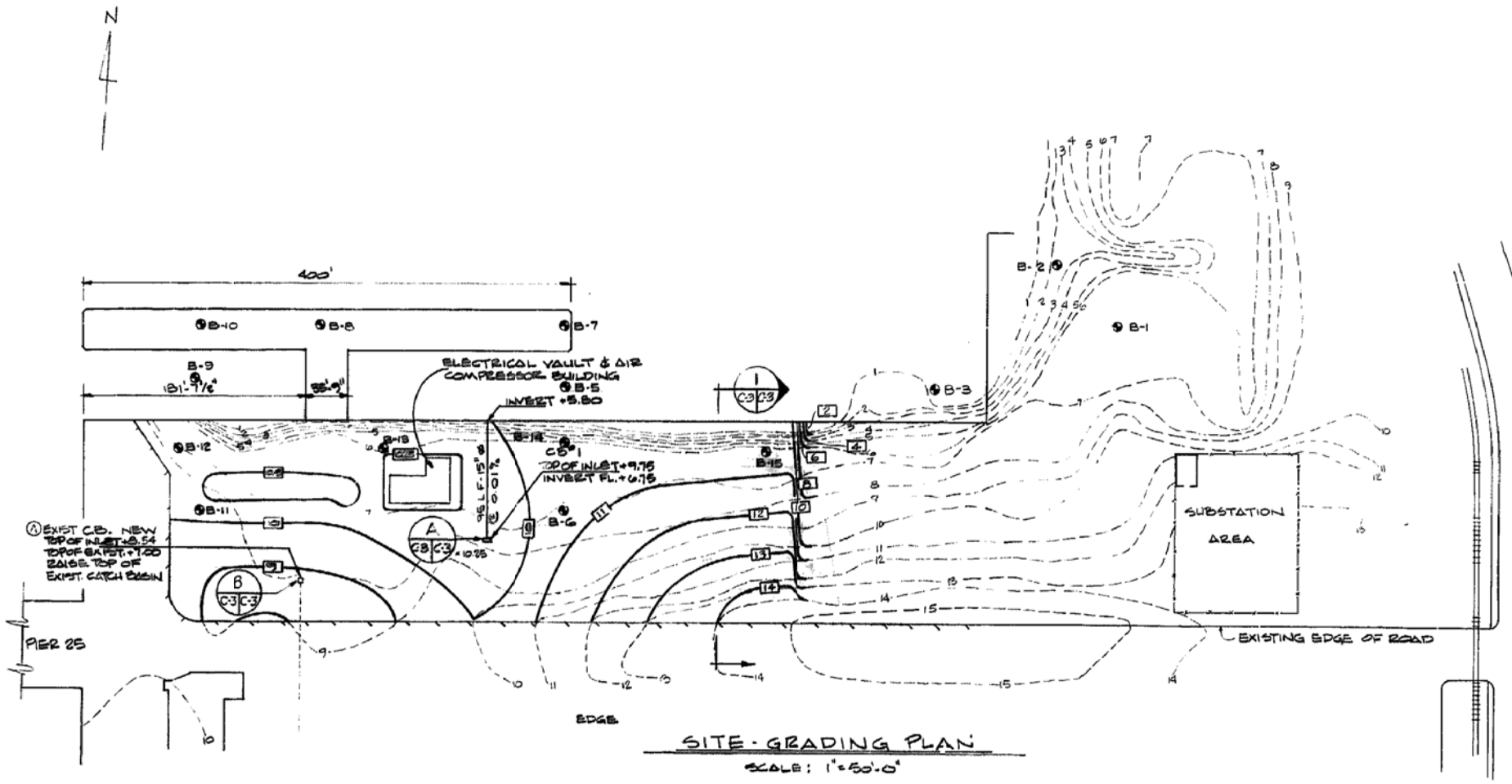

SITE-GRADING PLAN
SCALE: 1"=50'-0"

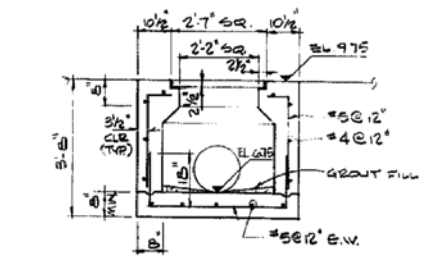

NEW CATCH BASIN DETAIL (A) C3/C3
SCALE: ½"=1'-0"

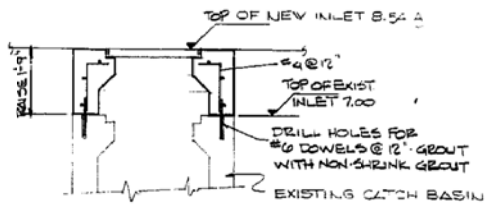

RAISED TOP OF EXIST. CATCH BASIN DETAIL (B) C3/C3
SCALE: ½"=1'-0"

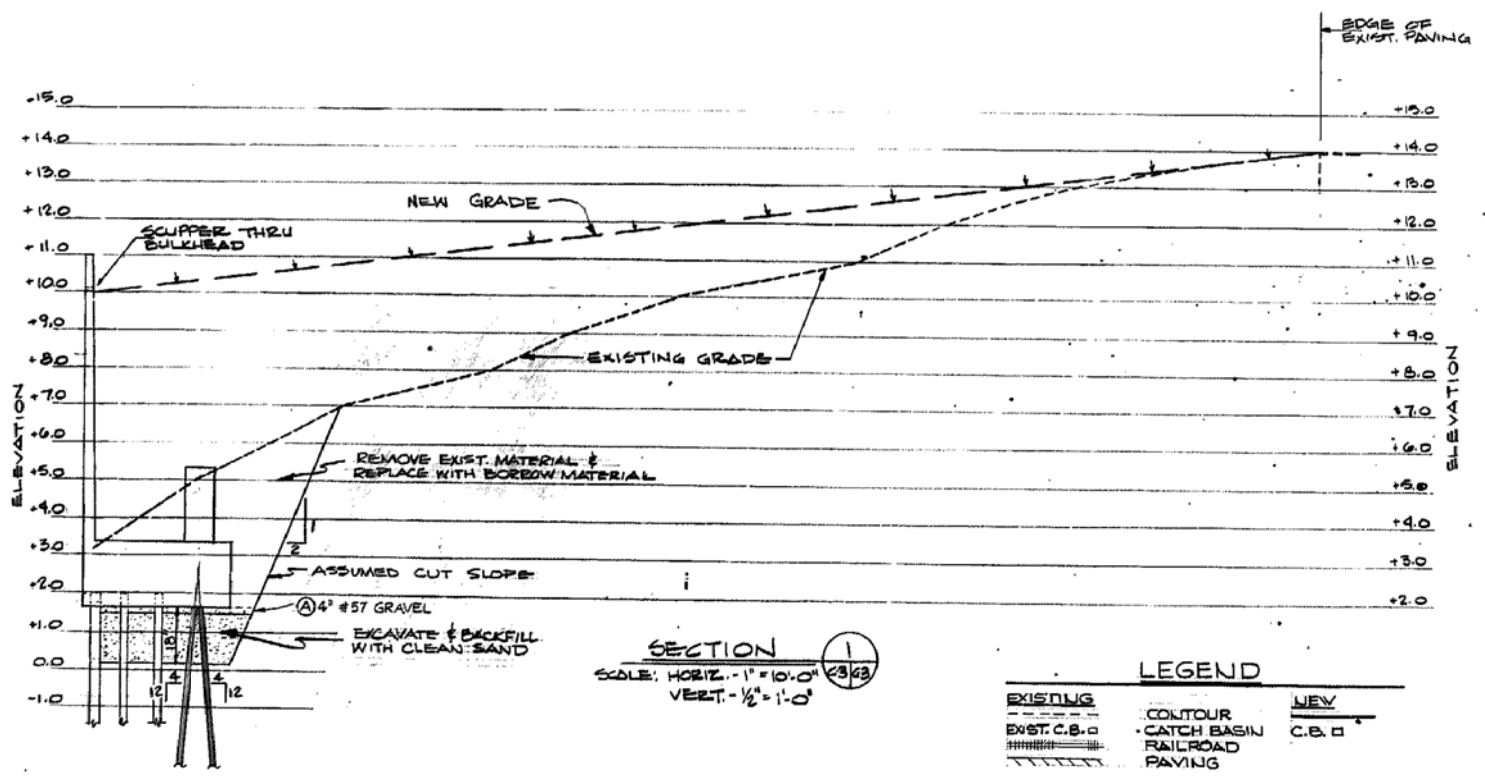

SECTION (1) C3/C3
SCALE: HORIZ. - 1"=10'-0"
VERT. - ½"=1'-0"

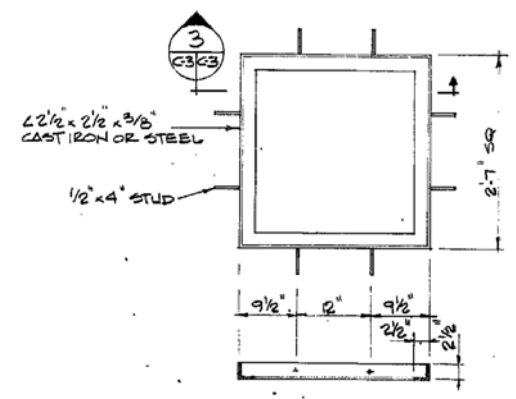

SECTION (3) C3/C3
FRAME
SCALE: 1"=1'-0"

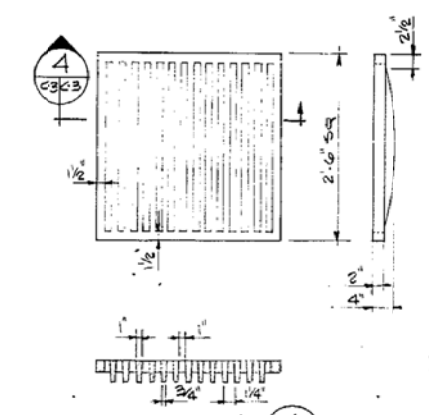

SECTION (4) C3/C3
GRATE
SCALE: 1"=1'-0"

LEGEND

EXISTING		NEW
EXIST. C.B.	CONTOUR	C.B.
	CATCH BASIN	
	RAILROAD	
	PAVING	

GRAPHIC SCALE

½"=1'-0"
1"=1'-0"
1"=10'-0"
1"=50'-0"

RECORD DRAWING
LETTER DATED 2 SEP 1982

C-3

S.T. HUDSON ENGINEERS, INC.
211 S. BROAD STREET
PHILADELPHIA, PA.

DEPARTMENT OF THE NAVY — NAVAL FACILITIES ENGINEERING COMMAND
ATLANTIC DIVISION
NAVAL STATION — NORFOLK, VIRGINIA

DES. W.H. DR. REE CHK. ELS.
PROJ. MGR. M.F. CH. ENGR. AGP.
SUBMITTED BY: DATE: CHAIRMAN 4-1-80
FIRM MEMBER MUNICIPAL
EFD FOR CHIEF RVD.
NO. DIR.
APPROVED DATE
ENGINEER IN CHARGE
FOR EFD FOR COMMANDER NAVFAC

NAVAL STATION NORFOLK, VA.
AFDL-47 MOORING FACILITIES
GRADING PLAN
SECTION & DETAILS

SIZE F | CODE IDENT. NO. 80091 | NAVFAC DRAWING NO. 4054280
CONSTR. CONTR. NO. N62470-77-B-7576
SCALE NOTED | SPEC. 05-77-7576 | SHEET 6 OF 48
EFD DWG. NO. 154280

COMMONWEALTH OF VIRGINIA
SAMUEL T. HUDSON
NO. 7957
CERTIFIED PROFESSIONAL ENGINEER

REVISIONS			
SYM.	DESCRIPTION	DATE	APPROVED
		[illegible]	[illegible]

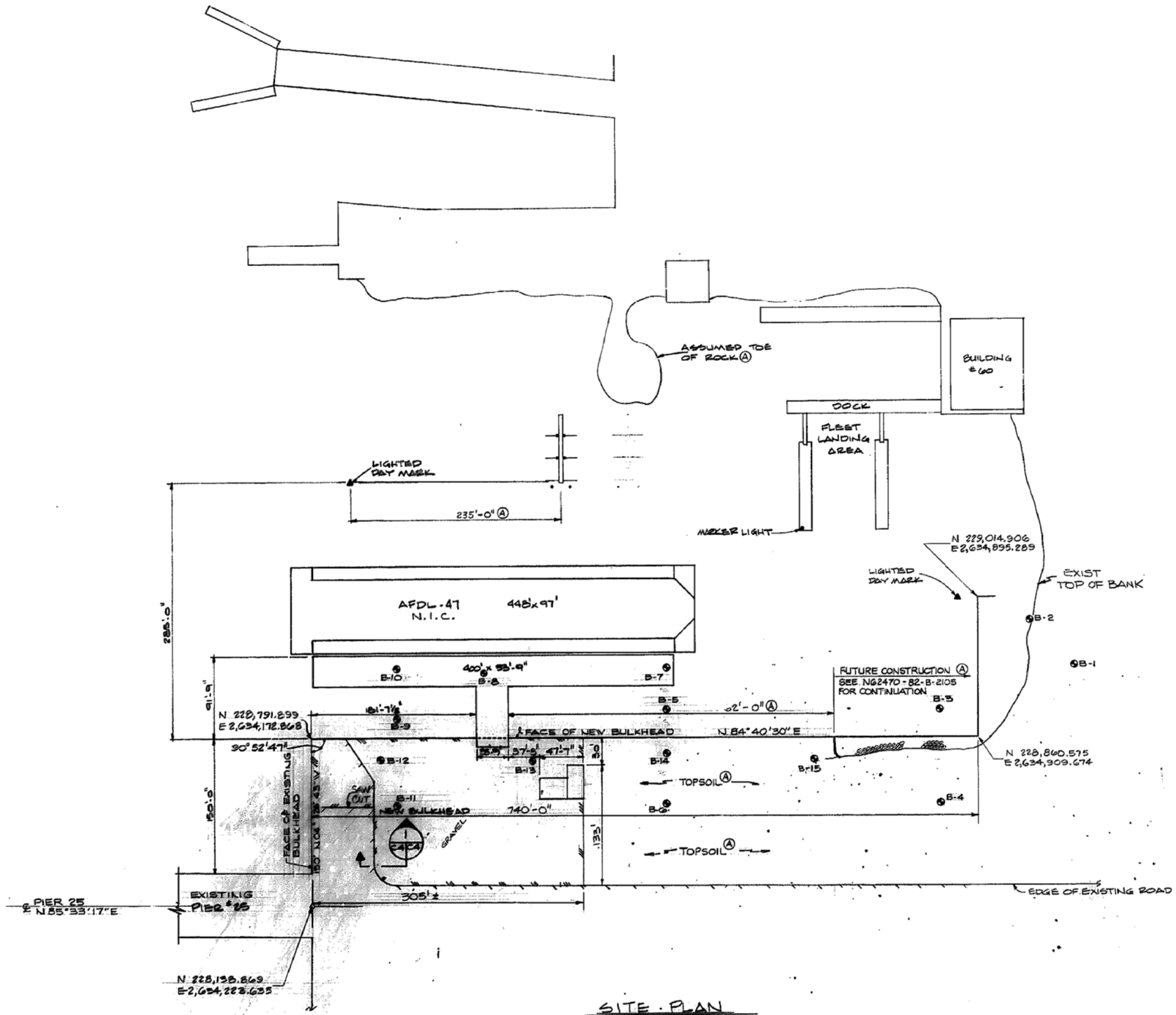

SITE PLAN
SCALE: 1"=50'-0"

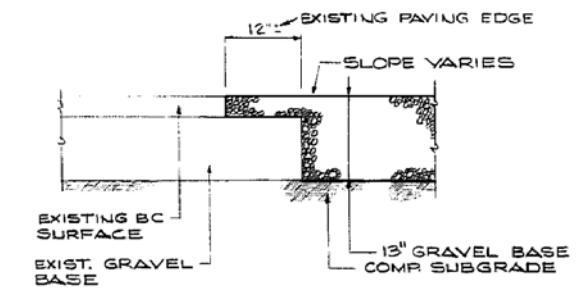

SECTION 1 C4 C4
NO SCALE

"BM" - PIER 24 CENTER LINE & FACE OF BULKHEAD FACE, MARKED USN-B.M.-CEP 31, ELEV. = 10.02'. VERTICAL CONTROL BASED ON STATION LOW WATER DATUM (0.00), WHICH IS 1.84' BELOW NATIONAL GEODETIC VERTICAL DATUM OF 1972.
(MEAN HIGH WATER = +3.06
MEAN LOW WATER = +0.56)
N.G.V.D. 1972

LEGEND

EXISTING PAVING

NEW GRAVEL

NOTE:
DAYMARK PILES: TREATED TIMBER
BID LENGTH: 54 FT.
CAPACITY: 20 TONS
TIP ELEV. = 42.0
CUT-OFF ELEV. +11.0

GRAPHIC SCALE
1"=50'-0"
50 0 50 100

RECORD DRAWING LETTER DATED 2 SEP 1982

C-4

S.T. HUDSON ENGINEERS, INC.
211 S. BROAD STREET
PHILADELPHIA, PA.

DEPARTMENT OF THE NAVY — NAVAL FACILITIES ENGINEERING COMMAND
ATLANTIC DIVISION
NAVAL STATION — NORFOLK, VIRGINIA

DES. ALF DR. ESS CHK. PCF
PROJ. MGR. ALF CH. ENGR. AGF
SUBMITTED BY: CHAIRMAN 4-1-80
FIELD MEMBER PRINCIPAL
EFD PROJ. MGR. RYD
APPROVED DATE
APPROVED IN CHARGE DATE
PER EFD FOR COMMANDER NAVFAC

NAVAL STATION NORFOLK, VA.
AFDL-47 MOORING FACILITIES
SITE PLAN

SIZE F | CODE IDENT. NO. 60091 | NAVFAC DRAWING NO. 4054281
CONSTR. CONTR. NO. N62470-77-B-7576
SCALE NOTED | SPEC. 05-77-7576 | SHEET 7 OF 48
EFD DWG. NO. 154281

SAMUEL T. HUDSON NO. 7987 REGISTERED PROFESSIONAL ENGINEER

BORING No. B-1 — SURFACE ELEV. +6.9'

DESCRIPTION	N
GREY COARSE TO FINE SAND, FILL MATERIAL - LOOSE	6
GREY TO BLACK MEDIUM TO FINE SAND, CINDERS, ORGANICS, ETC. FILL MATERIAL	5
GREY TO BLACK SAND, CINDERS, SHELL, ETC. - FILL MATERIAL	4
DARK GREY TO BLACK MEDIUM TO FINE SAND - MEDIUM	14
DARK GREY TO BLACK MEDIUM TO FINE SAND - DENSE	58
GRAY SILTY CLAY - SOFT	5
GRAY SILTY CLAY - SOFT	UD PR / PR
DARK BROWN TO BLACK ORGANIC SILTY CLAY - SOFT	4
DARK BROWN TO BLACK ORGANIC SILTY CLAY - SOFT	6
DARK BROWN TO BLACK ORGANIC SILTY CLAY, TRACE VERY FINE SAND IN LENSES, SLIGHTLY MICACEOUS - SOFT	5
DARK BROWN TO BLACK SILTY VERY FINE SAND, ORGANIC, SLIGHTLY MICACEOUS - LOOSE	7
GREY FINE SAND - MEDIUM	24
GREENISH GREY FINE TO VERY FINE SAND WITH SHELL FRAGMENTS - SOME SILT - MED.	27
GREENISH GREY FINE TO VERY FINE SAND WITH SHELL FRAGMENTS - TRACE SILT - MED	21
GREENISH GREY FINE TO VERY FINE SAND WITH SHELL FRAGMENTS - MEDIUM	28
BOTTOM OF BORING -55.1'	

BORING No. B-2 — SURFACE ELEV. +2.9'

DESCRIPTION	N
TAN FINE SAND, SOME MEDIUM SAND - LOOSE	5
WOOD	46
TAN GREY COARSE TO FINE SAND - DENSE	58
GREY COARSE TO FINE SAND, TRACE GRAVEL - DENSE	60
TAN MEDIUM TO FINE SAND - MEDIUM	21
LIGHT GREY SILTY CLAY - SOFT	5
LIGHT GREY SILTY CLAY - SOFT	7
BROWNISH GREY TO BLACK ORGANIC SILTY CLAY	10
BROWNISH GREY ORGANIC SILTY CLAY - SOFT	7
GREY FINE SAND - MEDIUM	16
GREY FINE TO VERY FINE SAND - DENSE	34
GREENISH GREY FINE TO VERY FINE SAND, SOME SHELL FRAGMENTS - MEDIUM	20
GREENISH GREY FINE TO VERY FINE SAND, SOME SHELL FRAGMENTS - MEDIUM	18
GREENISH GRAY FINE TO VERY FINE SAND, TRACE OF SILT, SOME SHELL FRAGMENTS - MEDIUM	19
GREENISH GREY FINE TO VERY FINE SAND, SOME SHELL FRAGMENTS - DENSE	37
BOTTOM OF BORING -64.1'	

BORING No. B-3 — SURFACE ELEV. -0.5'

DESCRIPTION	N
WATER	
DARK GREY SILTY CLAY - VERY SOFT	PU / PU
DARK GREY SILTY CLAY - VERY SOFT	PU / PU
DARK GREY SILTY CLAY	UD PR / PR
TAN TO LIGHT GREY MEDIUM TO FINE SAND - MEDIUM	22
TAN MEDIUM TO FINE SAND - MEDIUM	12
BROWNISH GREY ORGANIC SILTY CLAY - SOFT	7
BROWNISH GREY ORGANIC SILTY CLAY - SOFT	8
BROWNISH GREY ORGANIC SILTY CLAY - SOFT	9
BROWNISH GREY ORGANIC SILTY CLAY, LAYERS OF ORGANIC MATERIAL (WOOD) AT 36' - SOFT	14
GREY SANDY SILT - LOOSE	15
LIGHT GREY FINE SAND - MEDIUM	
LIGHT GREY FINE SAND - MEDIUM	17
GREENISH GREY FINE TO VERY FINE SAND, SOME SHELL FRAGMENTS - MEDIUM	
GREENISH GREY FINE TO VERY FINE SAND, SOME SHELL FRAGMENTS - DENSE	28
GREENISH GREY FINE TO VERY FINE SAND, SOME SILT SOME SHELL FRAGMENTS - DENSE	41
GREENISH GREY FINE TO VERY FINE SAND, SOME SILT SOME SHELL FRAGMENTS - DENSE	39
BOTTOM OF BORING -62.0'	

BORING No. B-4 — SURFACE ELEV. +10.0'

DESCRIPTION	N
BROWN SAND, SILT-CINDERS, ETC. - FILL MATERIAL	9
BROWN COARSE TO FINE SAND, SOME CLAY - FILL MAT.	6
BROWN TO BLACK SAND, SILT, CINDERS, ETC. - FILL MATERIAL	5
DARK GREY SILTY CLAY - SOFT	3
GREY MEDIUM TO FINE SAND, SOME SHELL FRAGMENTS MEDIUM	7
LIGHT GREY MEDIUM TO FINE SAND - LOOSE	4
GREY SILTY CLAY	UD, PR
DARK BROWN TO BLACK ORGANIC SILTY CLAY - SOFT	2 / UD PR
DARK BROWN TO BLACK ORGANIC SILTY CLAY - LENSES OF VERY FINE SAND - SOFT	4
DARK BROWN ORGANIC SILTY CLAY - SOME LENSES OF VERY FINE SAND	UD PR
DARK BROWN TO DARK GREY VERY FINE SAND, SOME SILT, ORGANIC, SLIGHTLY MICACEOUS - LOOSE	4
DARK GREY FINE SAND, SOME WHAT ORGANIC - MEDIUM	20
DARK GREY TO GREENISH GREY SILTY VERY FINE SAND, SOME CLAY - MEDIUM	11
GREENISH GREY FINE TO VERY FINE SAND WITH SHELL FRAGMENTS - SOME SILT - MED.	14
GREENISH GREY FINE TO VERY FINE SAND WITH SHELL FRAGMENTS - MEDIUM	14
GREENISH GREY VERY FINE SAND WITH SHELL FRAGMENTS - MEDIUM	26
BOTTOM OF BORING -52.0'	

BORING No. B-5 — SURFACE ELEV. -5.5'

DESCRIPTION	N
WATER	
GREY TO BLACK SAND, SILT AND CLAY - LOOSE	PU / PU
GREY MEDIUM TO FINE SAND, SILT AND CLAY - LOOSE	PU / PU
LIGHT GREY SILTY CLAY - SOFT	10
GREY BROWN TO BLACK ORGANIC SILTY CLAY, TRACE VERY FINE SAND IN THIN LENSES - SOFT	6
GREY BROWN ORGANIC SILTY CLAY, TRACE VERY FINE SAND IN LENSES, SLIGHTLY MICACEOUS - SOFT	7
GREY BROWN ORGANIC SILTY CLAY, SLIGHTLY MICACEOUS - SOFT	6
BROWN GREY TO BLACK ORGANIC SILTY CLAY, TRACE VERY FINE SAND - SOFT	9
GREY FINE SAND, SOME ORGANIC LENSES, SOME SILT - LOOSE	10
GREY BROWN ORGANIC SANDY SILT, SOME CLAY - LOOSE	7
GREY FINE SAND, SOME MEDIUM SAND, TRACE SILT - MEDIUM	19
GREENISH GREY FINE TO VERY FINE SAND, TRACE SILT, SOME SHELL FRAGMENTS DENSE	33
GREENISH GREY FINE TO VERY FINE SAND, TRACE SILT, SOME SHELL FRAGMENTS - MEDIUM	26
BOTTOM OF BORING -62.0'	

BORING No. B-6 — SURFACE ELEV. +7.1'

DESCRIPTION	N
BLACK SAND, SILT, CLAY, WOOD, ETC. - FILL MATERIAL	14
TAN TO GREY FINE SAND, TRACE SHELL - MEDIUM	20
GREY FINE SAND, SOME SHELL FRAGMENTS - LOOSE	5
GREY MEDIUM TO FINE SAND - MEDIUM	12
GREY COARSE TO FINE SAND - MEDIUM	10
GREY FINE SAND - MEDIUM	14
LIGHT GREY FINE SAND - LOOSE	11
BLUE GREY SANDY SILT AND CLAY - SOFT	5
DARK GREY TO GREENISH GREY SILTY VERY FINE SAND SLIGHTLY MICACEOUS - LOOSE	5
DARK BROWN SILTY CLAY, SLIGHTLY MICACEOUS - SOFT	6
GREENISH GREY VERY FINE SAND, SOME SHELL FRAGMENTS, TRACE SILT - MEDIUM	14
GREENISH GREY FINE TO VERY FINE SAND, TRACE SILT, SOME SHELL FRAGMENTS MEDIUM	15
GREENISH GREY SILTY FINE TO VERY FINE SAND WITH SHELL FRAGMENTS - MEDIUM	25
GREENISH GREY VERY FINE SAND WITH SHELL FRAGMENTS - DENSE	59
BOTTOM OF BORING -54.9'	

BORING No. B-7 — SURFACE ELEV. -14.5'

DESCRIPTION	N
WATER	
DARK GREY TO BLACK SILTY CLAY - VERY SOFT	PU
DARK GREY TO BLACK SILT AND CLAY - VERY SOFT	PU / PU
DARK GREY TO BLACK SILT AND CLAY	PR / PR
DARK GREY SILTY CLAY - VERY SOFT	PU / PU
BROWNISH GREY SILTY CLAY, ORGANIC - SOFT	5
BROWN TO BLACK ORGANIC MATERIAL WITH SILT AND CLAY - SOFT	7
DARK GREY SILTY FINE SAND TRACE CLAY - MEDIUM	16
GREY MEDIUM TO FINE SAND SOME SHELL FRAGMENTS DENSE	32
GREY MEDIUM TO FINE SAND TRACE SHELL FRAGMENTS MEDIUM	23
GREENISH GREY FINE TO VERY FINE SAND TRACE SILT SOME SHELL FRAGMENTS MEDIUM	21
GREENISH GREY FINE TO VERY FINE SAND TRACE SILT SOME SHELL FRAGMENTS MEDIUM	29
BOTTOM OF BORING -62.0'	

BORING No. B-8 — SURFACE ELEV. -9.8'

DESCRIPTION	N
WATER	
LIGHT GREY MEDIUM TO FINE SAND SOME SHELL FRAGMENTS LOOSE	PU / PU
GREY MEDIUM TO FINE SAND LENSES OF SILTY CLAY AND ORGANICS - VERY LOOSE	PU / PU
TAN TO BROWN MEDIUM TO FINE SAND - MEDIUM	
LIGHT GREY SILTY CLAY MEDIUM	15
BROWNISH GREY ORGANIC SILTY CLAY - SOFT	6
BROWNISH GREY ORGANIC SILTY CLAY, TRACE VERY FINE SAND IN LENSES - SOFT	7
LIGHT BLUE GREY SILT, SOME CLAY, SOME VERY FINE SAND - SOFT; ORGANIC MATERIAL, WOOD SOFT	8
BROWNISH GREY ORGANIC SILTY CLAY - MEDIUM; GREY FINE TO VERY FINE SAND - MEDIUM	23
GREY FINE TO VERY FINE SAND TRACE SHELL FRAGMENTS - MED.	23
GREY FINE SAND, TRACE SHELL FRAGMENTS, SOME ORGANICS, WOOD - MEDIUM	18
GREY FINE TO VERY FINE SAND SOME SILTY CLAY IN LENSES	18
GREENISH GREY FINE TO VERY FINE SAND TRACE SILT SOME SHELL FRAGMENTS - DENSE	37
BOTTOM OF BORING -62.0'	

BORING No. B-9 — SURFACE ELEV. -8.3'

DESCRIPTION	N
WATER	
TAN COARSE TO FINE SAND AND GRAVEL - LOOSE	PU / PU
LIGHT GREY FINE TO VERY FINE SAND - LOOSE	PU / PU
TAN MEDIUM TO FINE SAND - MEDIUM	15
GREY SILTY CLAY - SOFT	8
DARK BROWN TO BLACK ORGANIC SILTY CLAY - SOFT	4
BROWNISH GREY ORGANIC SILTY CLAY - SOFT	6
BROWNISH GREY ORGANIC SILTY CLAY - SOFT	7
BROWN TO BLACK ORGANIC MATERIAL - WOOD - SOFT	5
LIGHT GREY FINE TO VERY FINE SAND - LOOSE	
LIGHT GREY SILTY CLAY LAYER OF WOOD AT 45.0' - SOFT	6
GREY MEDIUM TO FINE SAND - VERY DENSE	91
GREENISH GREY FINE TO VERY FINE SAND, SOME SHELL FRAGMENTS - MEDIUM	16
GREENISH GREY FINE TO VERY FINE SAND, SOME SHELL FRAGMENTS - DENSE	30
BOTTOM OF BORING -62.0'	

BORING No. B-10 — SURFACE ELEV. -13.5'

DESCRIPTION	N
WATER	
GREY TO BROWN TO BLACK SAND, SILT & CLAY - VERY SOFT	PU / PU
GREY SILTY CLAY WITH LAYERS OF MEDIUM TO FINE SAND	UD PR / PR
BROWN TO BLACK ORGANIC MATERIAL (PEAT) WITH SILT AND CLAY - SOFT	4
BROWNISH GREY ORGANIC SILTY CLAY - SOFT	5
BROWNISH GREY ORGANIC SILTY CLAY - SOFT	5
BROWN TO BLACK ORGANIC MATERIAL (WOOD AND PEAT) WITH SILT AND CLAY - MEDIUM SOFT	11
BROWNISH GREY FINE SAND SOME VERY FINE SAND - MEDIUM	14
GREY SILTY FINE SAND LAYERS OF SILTY CLAY, LAYERS OF ORGANIC MATERIAL (WOOD) - LOOSE	10
GREY FINE SAND, TRACE MEDIUM SAND, TRACE SHELL FRAGMENTS - MEDIUM	21
GREENISH GREY FINE TO VERY FINE SAND, TRACE SILT SOME SHELL FRAGMENTS - DENSE	47
GREENISH GREY FINE TO VERY FINE SAND, SOME SILT, SOME SHELL FRAGMENTS - DENSE	45
GREENISH GREY SILTY FINE TO VERY FINE SAND, SOME SHELL FRAGMENTS - DENSE	30
BOTTOM OF BORING -67.0'	

BORING No. B-11 — SURFACE ELEV. +9.4'

DESCRIPTION	N
BLACK SAND, SILT, CINDERS, WOOD, ETC. - FILL MATERIAL	19
BROWN TO BLACK SAND, SILT, SHELL, ETC. - FILL MATERIAL	24
BLACK SAND, SHELL, SILT ETC. - FILL MATERIAL	9
GREY MEDIUM TO FINE SAND - MEDIUM	21
GREY COARSE TO FINE SAND TRACE SHELL FRAGMENTS LAYERS OF FINE SAND - MED.	28
GREY COARSE TO FINE SAND TRACE SHELL FRAGMENTS MEDIUM	28
BROWN TO BLACK ORGANIC FINE SAND - SOME SILT - MED.	24
GREY TO BLACK ORGANIC SILTY CLAY - SLIGHTLY MICACEOUS - MEDIUM	12
GREY TO BLACK ORGANIC SILTY CLAY - SOFT	6
BLACK ORGANIC SILTY CLAY, TRACE VERY FINE SAND - MED.	11
GREY FINE SAND, SOME VERY FINE SAND - MEDIUM	23
GREY MEDIUM TO FINE SAND - MEDIUM	18
GREY TO GREENISH GREY VERY FINE SAND AND SHELL FRAGMENTS - SOME SILT - DENSE	29
GREY TO GREENISH GREY FINE SAND WITH SHELL FRAGMENTS - DENSE	36
BOTTOM OF BORING -52.6'	

GENERAL NOTES:

1. BORINGS ADVANCED BY WASHING.
2. "N" COLUMN INDICATES NUMBER OF BLOWS REQUIRED TO DRIVE 2" O.D. SPLIT SPOON SAMPLER ONE FOOT INTO UNDISTURBED SOIL WITH A 140 LB. HAMMER FALLING 30" AS PER ASTM TEST D-1586 AT ITS GRAPHIC DEPTH.
3. ALL DEPTHS AND LOCATIONS ARE APPROXIMATE.
4. BORINGS B-1 THROUGH B-11 DRILLED BY "HERBERT AND ASSOCIATES" IN 1978.
5. DESCRIPTION OF SOIL CLASSIFICATION ON BASIS OF VISUAL ESTIMATE BY DRILLER WITH LATER LABORATORY CLASSIFICATION OF GROUPS.
6. BORING LOCATIONS ARE SHOWN ON SHEET C-1.

GRAPHIC SCALE

(1" = 4' VERTICAL) 4 0 4 8 12 16 20 24

W.H. = WEIGHT OF HAMMER - 140 LBS.
UD = UNDISTURBED SAMPLE
PU = PUSH; FORCE OF FOOT OR HAND
PR = PRESS; 500 P.S.I.

RECORD DRAWING LETTER DATED 8 SEP 1982

B-1

S.T. HUDSON ENGINEERS, INC. 211 S. BROAD STREET PHILADELPHIA, PA.

DEPARTMENT OF THE NAVY — NAVAL FACILITIES ENGINEERING COMMAND — ATLANTIC DIVISION — NORFOLK, VIRGINIA

NAVAL STATION NORFOLK, VA.

AFDL-47 MOORING FACILITIES

SOIL BORINGS

SIZE F — CODE IDENT. NO. 80091 — NAVFAC DRAWING NO. 4054282 — CONSTR. CONTR. NO. N 62470-77-B-7576 — SHEET 8 OF 48 — SPEC. 05-77-7576 — EFD DWG. NO. 154282

REVISIONS: SYM. | DESCRIPTION | DATE | APPROVED

REVISIONS			
SYM.	DESCRIPTION	DATE	APPROVED

BORING NO. B-12

SOIL CLASSIFICATION SURFACE ELEV. = 7.9	DEPTH FEET	SAMPLE NO.	SPT * **
Black very moist loose Silty SAND (SM) and wood, concrete (FILL)*	5	1	3/4 2/7
		2	9/7 9/9
		3	4/9 20/30
	8.0	4	9/17 4/8
Gray saturated very loose Clayey fine SAND (SC)	10	5	2/2 2/1
		6	1/1 0/1
	12.5		
Gray saturated loose fine SAND (SP) with trace of Silt		7	2 4/1
	20	8	1 2/4
	25	9	5 2/3
	27.5		
Dark brown, very moist soft to very stiff Clayey SILT (MH) with a trace of organic material	30	10	2 2/2
	35	11	8 8/18
	38.0		
Green gray, very moist medium stiff Silty CLAY (CL)	40	12	8 4/5
	42.5		
Greenish gray, very moist, medium dense Silty SAND (SM) with trace of marine shell fragments	45	13	4 5/6
	47.5		
Greenish gray, very moist, medium dense, fine to medium SAND (SP) with trace of marine shell fragments	50	14	9 8/21
	52.5		
Greenish gray, very moist, medium dense, Silt fine SAND (SM) with trace of marine shell fragments	55	15	8 7/16
		16	7 8/11

GROUND WATER DATA

Noted on rods	8.0'
At completion	8.6'
Caved in at	13.3'

BORING NO. B-13

SOIL CLASSIFICATION SURFACE ELEV. = 6.5	DEPTH FEET	SAMPLE NO.	SPT * **
Black moist loose Silty SAND (SM) with little to some concrete and wood (FILL)		1	4/3 2/2
	4.0	2	3/2 2/12
Gray, very moist saturated, loose to very loose fine to medium SAND (SP) with trace of Silt	5	3	3/3 2/1
		4	2/6 8/9
	10	5	1/3 2/1
		6	2/2 2/2
	12.5		
Gray, very moist, very soft silty CLAY (CH)	15	7	2 2/1
	17.0		
Gray saturated, very loose, fine to medium SAND (SP) with trace of gravel, Silt	20	8	2 2/1
	22.0		
Dark brown saturated very cose, fine SAND (SP) with trace to little Silt, organic material.	25	9	2 2/1
	26.5		
Dark brown, very moist soft to very stiff Clayey SILT (MH) with a trace of organic material. (piece of wood in Sample No. 12)	30	10	
	35	11	3 4/3
Greenish gray very moist, medium dense Silty fine SAND (SM) with trace of marine shell fragments.	40	12	3 3/4
	45	13	5 5/6
	50	14	8 5/8
	55	15	4 6/8
		16	5 6/8

GROUND WATER DATA

Noted on rods	8.0'
At completion	7.0'
Caved in at	7.5'

BORING NO. B-14

SOIL CLASSIFICATION SURFACE ELEV. = 6.1	DEPTH FEET	SAMPLE NO.	SPT * **
TOPSOIL 2"			
Black and brown moist, medium dense Silty SAND (SM) with some wood, const. debris (FILL)		1	5/5 10/20
	3.7.5	2	7/7 4/2
Gray, saturated, very soft, silty CLAY (CH) with trace of sand	5	3	1/0 1/0
		4	1/0 1/0
	9.0	5	0/2 1/2
Gray saturated very lopse, Clayey SAND (SC) with organic material in Sample No. 8	10	6	1/2 5/1
	15	7	2 2/1
		8	2 2/12
	24.0		
Brown and black, Stiff to very soft, Clayey SILT (MH-OH)	25	9	5 5/4
	30	10	2 2/1
	35	11	2 2/1
	39.0		
Greenish gray, very moist soft Sandy CLAY (CL)	40	12	2/3
	45	13	4 4/4
Dark brown and black saturated, loose, Silty fine SAND (SP)	47.8		
Greenish gray, very moist, Silty fine SAND (SM) with trace of marine shell fragments.	50	14	5 5/5
	55	15	9 4/7
		16	6 7/9

GROUND WATER DATA

Noted on rods	4.0'
At completion	7.0'
Caved in at	8.5'

BORING NO. B-15

SOIL CLASSIFICATION SURFACE ELEV. = 6.1	DEPTH FEET	SAMPLE NO.	SPT * **
TOPSOIL 2"			
Black and brown, very moist, loose, Silty SAND (SM) with some organic material and const. debris (FILL)		1	4/2 5/6
	4.0	2	5/3 3/2
Gray very moist, very soft, Silty CLAY (CH) with trace of organic material (5' sand lens at 9.0')	5	3	1/0 0/1
		4	0/0 0/0
		5	2/2 2/2
	10	6	2/2 1/1
	12.5		
Gray, very moist, very loose, fine to medium SAND (SP)	15	7	1 0/1
	19.0	8	1 1/2
Dark brownish gray very soft, Clayey SILT (MH) with trace of organic material	20		
	22.5		
gray very moist loose fine to medium, SAND (SP) with trace of Silt	25	9	5 4/5
	28.0		
Greenish gray, very moist, very soft, fine Sandy CLAY (CL)	30	10	3 1/2
	35	11	1 2/1
	37.0		
Greenish gray, very moist, loose to medium dense, Silty fine SAND (SM) with trace of marine shell fragments	40	12	3 3/7
	45	13	3 5/8
	50	14	3 4/7
	55	15	4 5/8
		16	4 8/12

GRAPHIC SCALE

SCALE 1"=3'-0" VERT

6 3 0 3 6 9 12

GENERAL NOTES:

1. * High blow counts due to large piece of wood.
2. ** Standard Penetration Test - blows per 6".
3. Borings Advanced by Washing.
4. All Depths and Locations are Approximate.
5. Borings B-12 through B-15 Drilled by ATEC ASSOCIATES of VIRGINIA. Between Feburary 21, 1979 and Feburary 27, 1979.
6. Discription of Soil Classification on Basis of Visual Estimate by Driller with Later Laboratory Classification of Groups.
7. Boring Locations Are Shown on Sheet C-1.

RECORD DRAWING
LETTER DATED 8 SEP 1982

B-2

S.T. HUDSON ENGINEERS, INC.
211 S. BROAD STREET
PHILADELPHIA, PA.

DEPARTMENT OF THE NAVY — NAVAL FACILITIES ENGINEERING COMMAND
ATLANTIC DIVISION
NAVAL STATION — NORFOLK, VIRGINIA

DES. H.K. DR. A.D.S. CHK. R.C.F.
PROJ. MGR. A.L.F. CH. ENGR. A.G.F.

NAVAL STATION NORFOLK, VA.

AFDL-47 MOORING FACILITIES
SOIL BORINGS

SIZE F | CODE IDENT. NO. 80091 | NAVFAC DRAWING NO. 4054283
CONTR. CONTR. NO. N62470-78-B-7576
SCALE NOTED | SPEC. 05-77-7576 | SHEET 9 OF 45
EFD DWG. NO. 154283

SAMUEL T. HUDSON NO. 7907 COMMONWEALTH OF VIRGINIA REGISTERED PROFESSIONAL ENGINEER

REVISIONS			
SYM.	DESCRIPTION	DATE	APPROVED
Ⓑ	REVISED AS-BUILT	10-1981	MDK

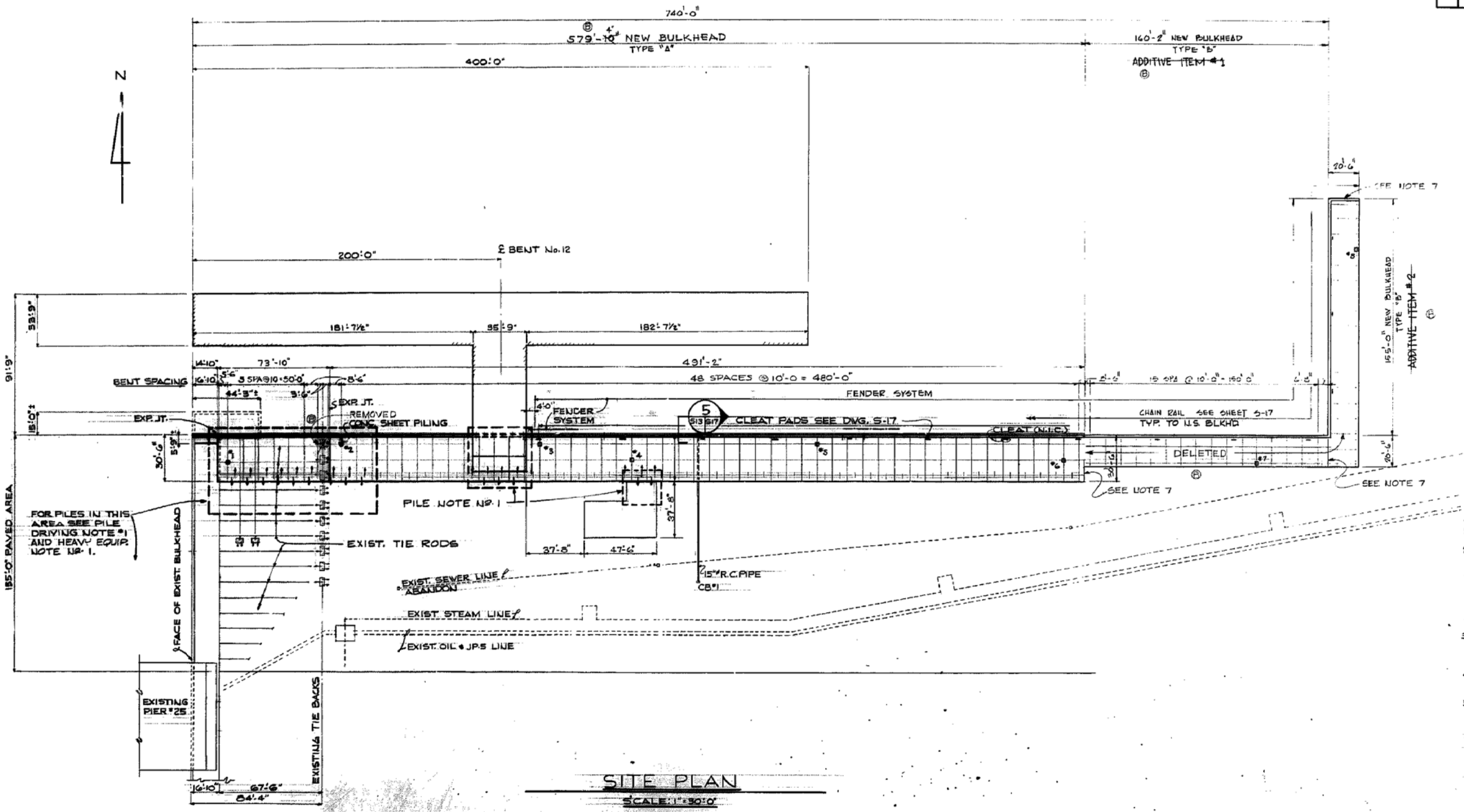

SITE PLAN

SCALE: 1" = 30'-0"

FOR BULKHEAD PLAN SEE DWG. S-14

LEGEND

- NEW SPUR PILES
- EXISTING SPUR PILES
- NEW PLUMB PILES
- TEST PILES
- FENDER SYSTEM
- P&D FOR FUTURE CLEATS

GRAPHIC SCALE
30 0 30 60
1" = 30'-0"

PILE DRIVING NOTES

1. CONTRACTOR SHALL EXERCISE EXTREME CAUTION IN DRIVING NEW PILES TO AVOID INTERFERENCE AND PREVENT DAMAGE TO EXISTING AND NEW PILES. PRIOR TO DRIVING NEW PILES, CONTRACTOR SHALL AUGER OR DRIVE CASING PIPE (NOT TO EXCEED 10" DIAMETER) TO ELEVATION -60 TO INSURE NEW PILE WILL NOT INTERFERE WITH EXISTING PILES OR PREVIOUSLY DRIVEN NEW PILES. AUGER EQUIPMENT AND/OR CASING PIPE SHALL BE REMOVED PRIOR TO DRIVING NEW PILES. PILE SHOES SHALL BE USED ON THOSE PILES THAT INADVERTENTLY MAY TOUCH PREVIOUSLY DRIVEN PILES EVEN AFTER AUGERING A PILOT HOLE. SHOES WILL HELP THE PILES SLIDE BY WHILE BEING DRIVEN. IF INTERFERENCE CANNOT BE AVOIDED, THE SLOPE OF THE SPUR PILES MAY BE CHANGED SUBJECT TO PRIOR APPROVAL BY THE CONTRACTING OFFICER.
2. THE ROW OF VERTICAL PILES IMMEDIATELY BEHIND THE BULKHEAD AND THE ROW OF COMPRESSION SPUR PILES MUST BE DRIVEN PRIOR TO DRIVING THE CONCRETE SHEET PILES.

HEAVY EQUIPMENT

1. CONTRACTOR SHALL EXERCISE CAUTION IN TRAVERSING THIS AREA WITH HEAVY EQUIPMENT TO AVOID DAMAGING TIE BACKS AND TIE RODS. EITHER MAINTAIN A MINIMUM OF 6 FT. OF EARTH COVER OVER THE TIE BACK SYSTEM OR, IF THE AREA IS EXCAVATED, PROVIDE CRIBBING TO BRIDGE THE EQUIPMENT OVER THE TIE BACK SYSTEM.

STRUCTURAL NOTES:

1. LIVE LOAD: SURCHARGE = 300 P.S.F.
2. SOIL PROPERTIES AS DETERMINED BY LANTDIV:
   a) FROM EL. +10.0 TO EL. 0.00 ϕ=28° γ = 100 P.C.F.
   b) FROM EL. 0.00 TO EL. -12.0 ϕ=28° γ_{sub} = 45 P.C.F.
   c) FROM EL. -12.0 TO EL. -27.0 ϕ=26° γ_{sub} = 40 P.C.F.
   d) FROM EL. -27.0 TO EL. -47.0 ϕ=26° γ_{sub} = 45 P.C.F. C = 200 P.S.F.
   e) BELOW EL. -47.0 ϕ=30° γ_{sub} = 60 P.C.F.
   NOTE: COHESION C = 200 P.S.F. APPLIES TO ACTIVE & PASSIVE EARTH PRESSURES IN STRATA (d).
3. CAST IN PLACE CONCRETE:
   a) CONCRETE f'_c = 4000 P.S.I. AT 28 DAYS
   b) REINFORCING STEEL A.S.T.M. A615, GRADE 60.
4. PRESTRESSED CONCRETE PILES & SHEET PILING f'_c = 5000 P.S.I. MIN.
5. PRECAST PRESTRESSED PILES SUPPORTING RELIEVING PLATFORM.
   TYPE "A" PLATFORM
   MINIMUM TIP ELEVATIONS
   VERTICAL PILES (12" x 12") EL. = -63.0
   SPUR PILES (14" x 14") EL. = -66.0
   (14" x 14") EL. = -61.0
   TYPE "B" PLATFORM.
   MINIMUM TIP ELEVATIONS
   VERTICAL PILES (12" x 12") EL. = -50.0
   SPUR PILES (14" x 14") EL. = -53.0
6. PRECAST PRESTRESSED CONCRETE SHEET PILING
   TYPE "A" BENDING MOMENT M = 59.0 FT. KIPS/FT. OF WIDTH TIP ELEVATION - 59.0
   TYPE "B" BENDING MOMENT M = 50.0 FT. KIPS/FT. OF WIDTH TIP ELEVATION - 38.0

"TYPE C" SHEET PILE WITH A MINIMUM BENDING MOMENT OF 26 FT K/FT. THIS IS THE DESIGN MOMENT FOR THE 2-12" CONCRETE SHEET PILES USED AS A RETURN AT THE END OF THE WALL."

NOTE: THE CONTRACTOR SHALL SUBMIT DESIGN CALCULATIONS OF PRESTRESSED CONCRETE MEMBERS TO THE CONTRACTING OFFICER FOR REVIEW AND APPROVAL.

7. AT THE EASTERN END OF NEW BULKHEAD (WHEREVER IT OCCURS, i.e. BASE BID, ADDITIVE #1 OR ADDITIVE #2), PROVIDE BULKHEAD RETURN AS DETAILED IN SECTION 1/S14/S16.

Ⓑ 8. NO TENSION SHALL BE ALLOWED IN THE CONCRETE OF THE PRESTRESSED CONCRETE SHEET PILES WHILE UNDER LOAD.

RECORD DRAWING LETTER DATED 8 SEP 1982

S-13

DEPARTMENT OF THE NAVY NAVAL FACILITIES ENGINEERING COMMAND
ATLANTIC DIVISION
NAVAL STATION NORFOLK, VIRGINIA
NAVAL STATION NORFOLK, VA.

AFDL-47 MOORING FACILITIES

BULKHEAD - SITE PLAN

FOR ORDER NO. 840V78-76
DES. V.R. JACKSON, P.E.
DRWN. W.C.W. / J.D.F.
TR.
CHK. V.R.J. FT. Mile
APP. Lt. Cdr. R.R. Miller, C.E.C., U.S.N.
DATE
DATE OF LAST REVISION

SIZE F | CODE IDENT. NO. 80091 | NAVFAC ENGINEERING DRAWING NO. 40A34230 | CONTR. DRAWING NO. NB3470-77-B-7576 | DATE OF NOTES APPR. 05-77-1976 | SHEET 2 OF 16 SHTS. | ATS DRAWING NO. 19429

REVISIONS			
SYM.	DESCRIPTION	DATE	APPROVED
B	REVISED AS-BUILT	10/28/82	MDK

EXIST. STRUCTURE TO REMAIN

EXIST. STRUCTURE TO BE REMOVED

3 SPACES @ 10'-0

N

44'-3"± TO BE REMOVED

5'-0" 10'-0" 5'-9" 10'-0" 10'-0" 3'-6"

5 EXP. JT.

14'-10"

16'-10"

5'-6"

5 SPA. @ 10'-0" = 50'-0"

73'-10"

10'-0"

5'-0"

5'-9"

1'-3"

3 S14/S14

EXISTING TIE RODS @ 10'-0"±

16'-10" VERIFY AS BUILT

67'-6" (VERIFY)

1 S14/S15

NOTE:
EXPANSION JOINT SHALL BE PROVIDED IN CAST IN PLACE CONCRETE BULKHEAD WALL AT A MAXIMUM CENTER TO CENTER SPACING OF 91'-0"± SEE DETAIL A S14/S14

5 EXP. JT.

8'-6" 3'-6" 3'-6" 8'-6"

SHEET PILING C S14/S17

B REMOVED

5'-9"

10'-0"

10'-0"

4'-2"

2'-4"

4'-3"

8'-6"

1'-4"

8'-6"

℄ EXIST. DEADMAN 3'-0"SQ x 5'-0" LG.

9 S14/S4

1 S14/S14

2 S14/S14

35'-9"

18'-4½"

17'-4½"

℄ BENT No.12

1" EXP. JT. MATERIAL BETWEEN RETAINING WALL & PIER

17'-0"

17'-0"

4'-0"

FENDER SYSTEM

14'-8"

2'-0"

10'-0"

4 S14/S15

37'-8½"

491'-2"

48 SPA @ 10'-0" = 480'-0"

4 S14/S16

31'-0"

3'-0"

3'-0"

47'-6"

NOTE:
FOR CHAIN RAILING & CLEAT PAD LOCATION SEE PLAN ON DWG. S-17

FOR FENDER SYSTEM & DRAIN SEE DETAIL 4 S14/S14

B S14/S17

CLEAT PAD

EXP. JT.

5 S14/S16

160'-2"

18 SPA @ 10'-0" = 180'-0"

1 S14/S16

19'-0"

7'-9"

10'-9"

2'-0"

6'-8"

20'-6"

2'-0"

DELETE

2'-0"

2'-0"

2'-0"

11'-5"

6'-8"

17 SPA @ 10'-0" = 170'-0"

179'-6"

4'-0"

EXTENT OF TYP. EAST WEST BULKHEAD REINF.

EXTENT OF TYP. NORTH SOUTH BULKHEAD REINF.

2'-4"

6'-0"

10'-0"

TYPICAL

TYPE BRACING (B) PLACE 2 NO. PILE DRIVEN TOGETHER.

BULKHEAD PLAN

SCALE: 1"=10'-0"

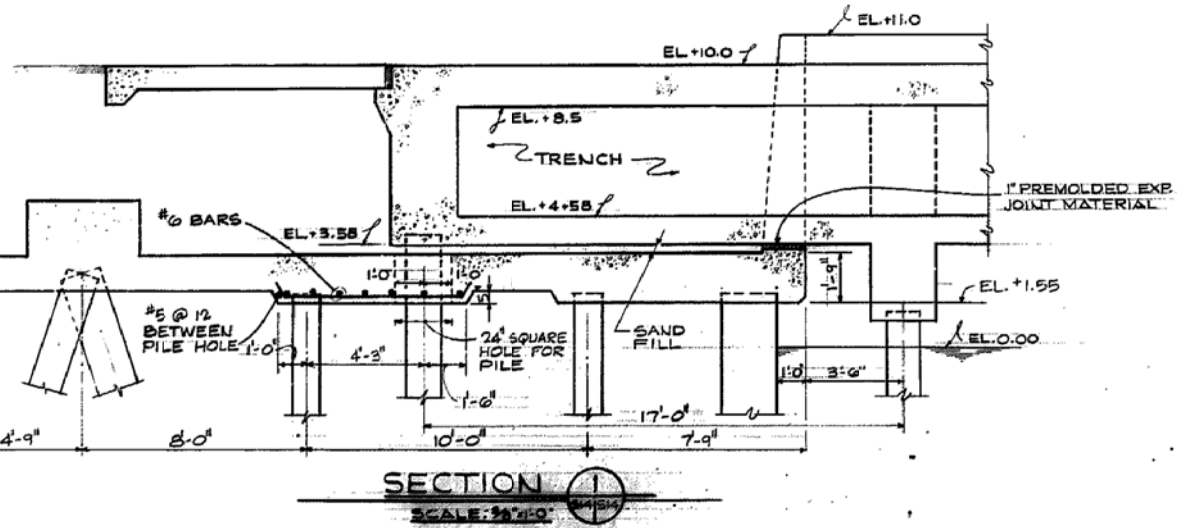

SECTION 1 S14/S14

SCALE: 3/8"=1'-0"

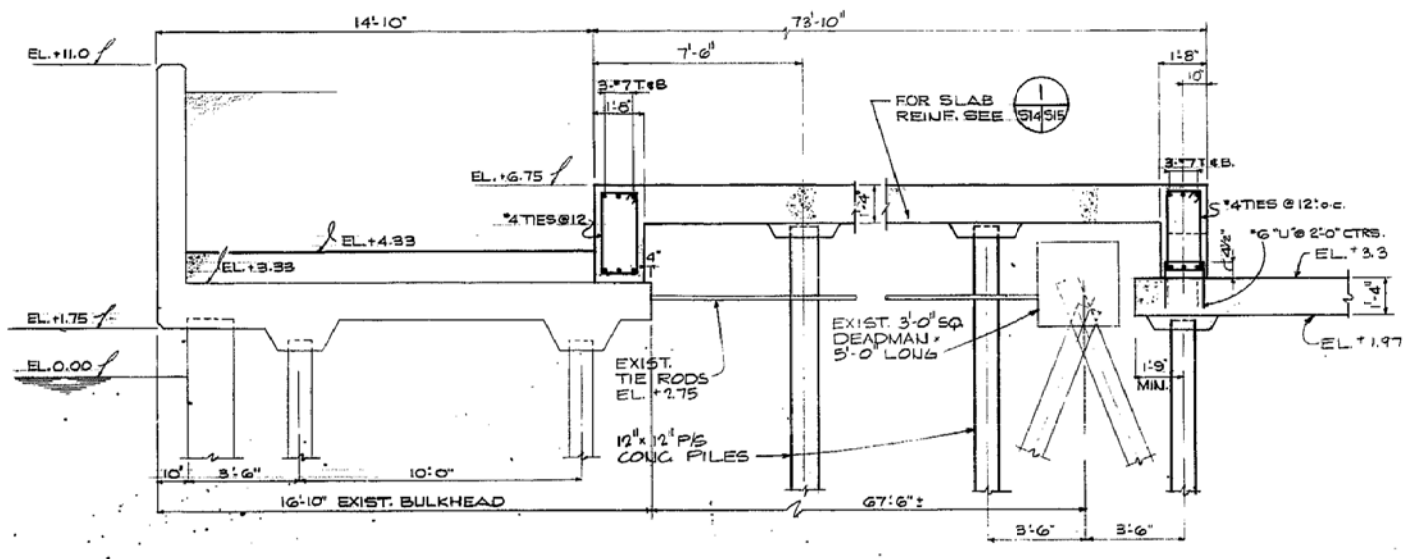

SECTION 3 S14/S14

SCALE: 3/8"=1'-0"

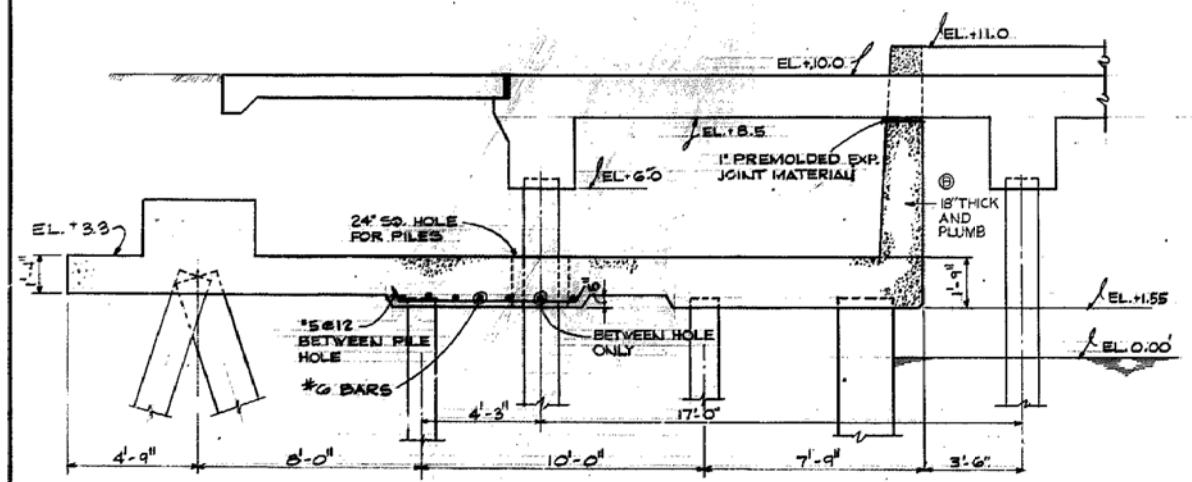

SECTION 2 S14/S14

SCALE: 3/8"=1'-0"

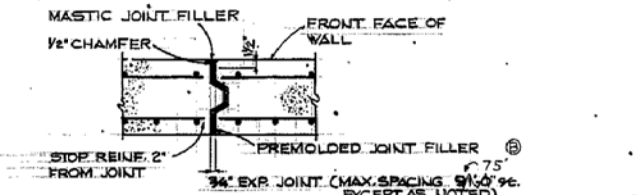

WALL EXPANSION JOINT DETAIL A S14/S14

NO SCALE

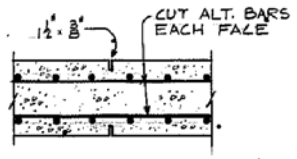

WALL CONTROL JT. AT 15% MAXIMUM

NO SCALE

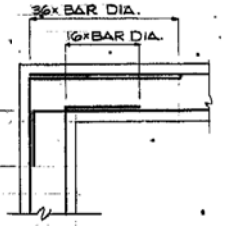

TYPICAL DETAIL OF REINFORCING AT CORNERS

NO SCALE

GRAPHIC SCALE

1"=10'-0" 10 5 0 10 20

3/8"=1'-0" 12 0 1 2 3 4 5 6 7

(12.5")

RECORD DRAWING LETTER DATED 8 SEP 1982

S-14

JOB ORDER NO. 540M7576
DES. V.R. JACKSON, P.E.
DRAWN: JDF / WCW
TR.
CHK.: VRJ
AS. MGR.: V.R. Jackson P.E.
DES. DIR.
SATISFACTORY TO
DATE

DEPARTMENT OF THE NAVY NAVAL FACILITIES ENGINEERING COMMAND
ATLANTIC DIVISION
NAVAL STATION NORFOLK, VIRGINIA
NAVAL STATION NORFOLK, VA.
AFDL-47 MOORING FACILITIES
BULKHEAD PLAN

SIZE F | CODE IDENT. NO. 80091 | NAVFAC DRAWING NO. 4054299
CONTR. CONTR. NO. N62470-77-B-7576
DISAPPROVED | APPD. 05-77-7576 | SHEET 33 OF 46
EFD DOC. NO. 154299

REVISIONS			
SYM.	DESCRIPTION	DATE	APPROVED
Ⓔ	REVISED AS-BUILT	10 MAY 82	HDR

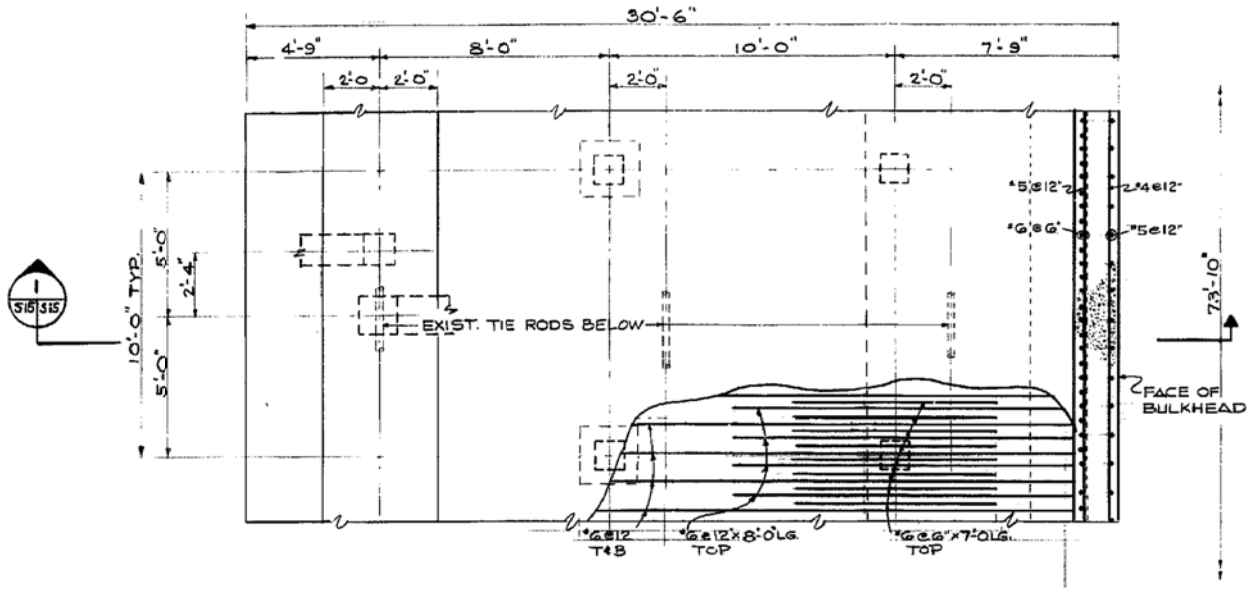

PARTIAL PLAN OF BULKHEAD

SCALE: 3/16"=1'-0"

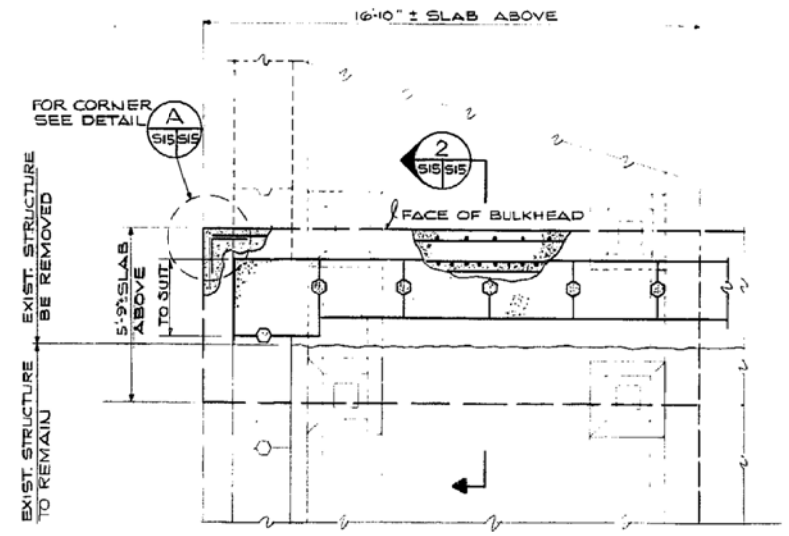

PARTIAL PLAN OF BULKHEAD

SCALE: 3/8"=1'-0"

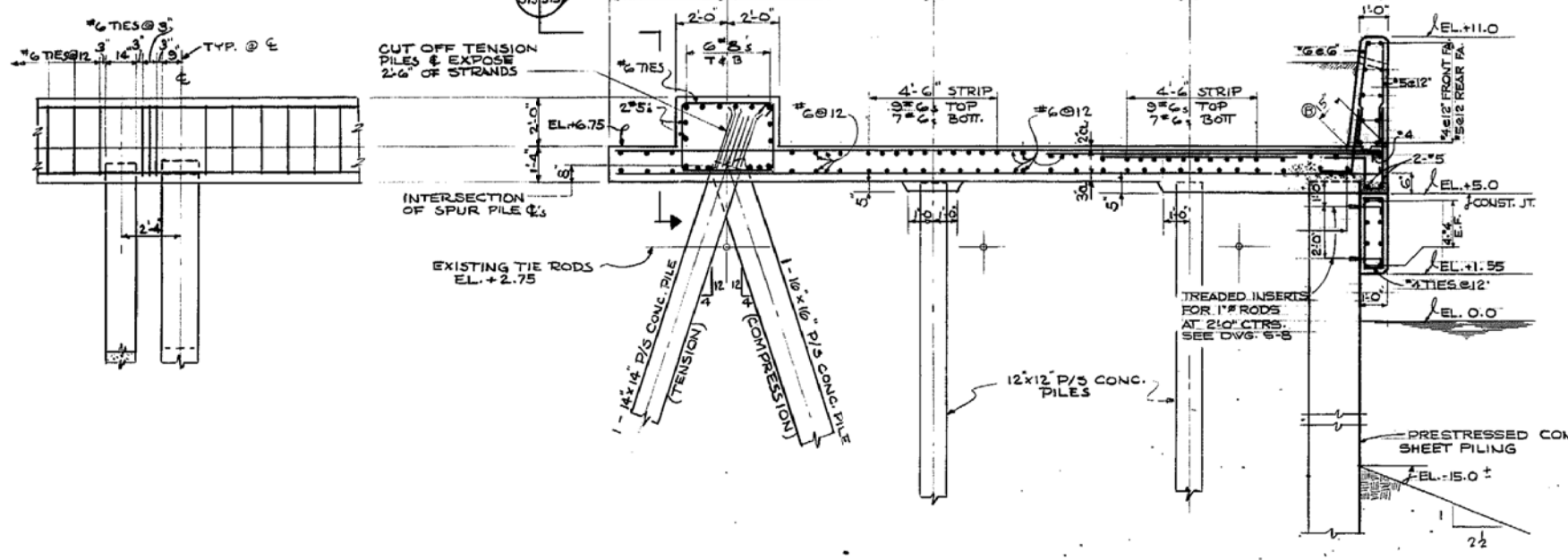

CORNER DETAIL A S15 S15

NO SCALE

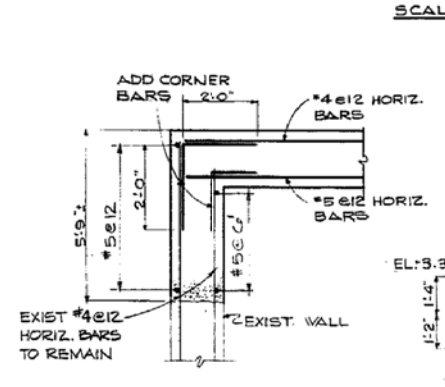

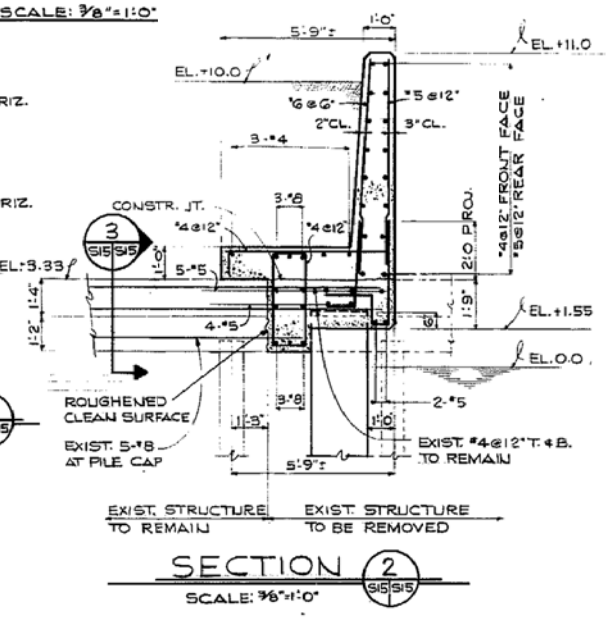

SECTION 2 S15 S15

SCALE: 3/8"=1'-0"

SECTION 4 S14 S15

SCALE: 3/8"=1'-0"

S15 S16

SECTION 1 S14 S15

SCALE: 3/8"=1'-0"

S-15

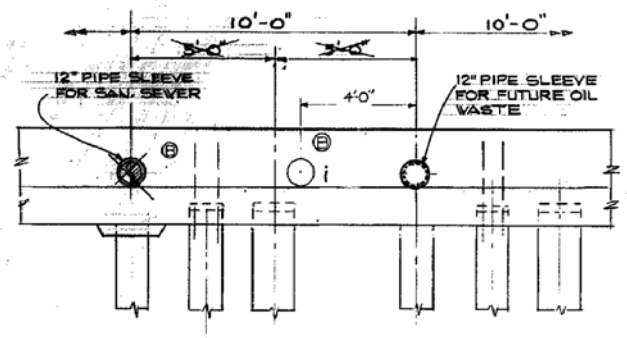

SECTION 4 S15 S16

SCALE: 3/8"=1'-0"

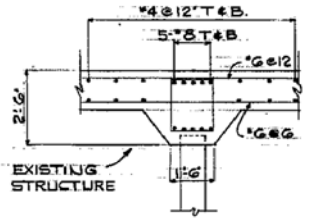

SECTION 3 S15 S15

SCALE: 3/8"=1'-0"

GRAPHIC SCALE

3/4"=1'-0"

3/8"=1'-0"

RECORD DRAWING LETTER DATED 8 SEP 1982	S-15

JOB ORDER NO. 540M7576
DES. V.R. JACKSON P.E.
DRWN. JDF / WCW
TR.
CHK. VBJ
SR. NGR. T.P. Michalos P.E.
DES. DIR.
SATISFACTORY TO DATE
APPROVED 13 JAN 1982

DEPARTMENT OF THE NAVY NAVAL FACILITIES ENGINEERING COMMAND
ATLANTIC DIVISION
NORFOLK, VIRGINIA
NAVAL STATION NORFOLK, VA.

AFDL-47 MOORING FACILITIES

BULKHEAD-SECTIONS

SIZE F | CODE IDENT. NO. 80091 | NAVFAC DRAWING NO. 4054300
CONTR. CONTR. NO. N62470-77-B-7576
SPEC. 05-77-7576 | SHEET 24 OF 45
EFD DWG NO. 154300

REVISIONS			
SYM.	DESCRIPTION	DATE	APPROVED
Ⓔ	REVISED AS-BUILT	01 FEB 82	HDR

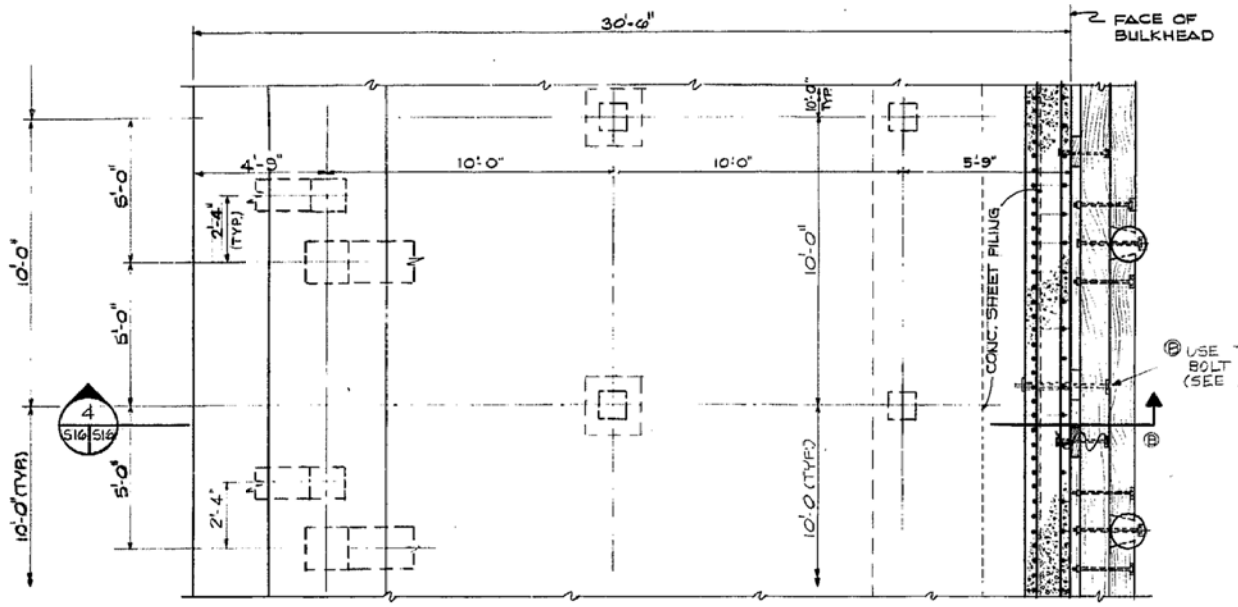

PARTIAL PLAN OF BULKHEAD

SCALE: 3/8"=1'-0"

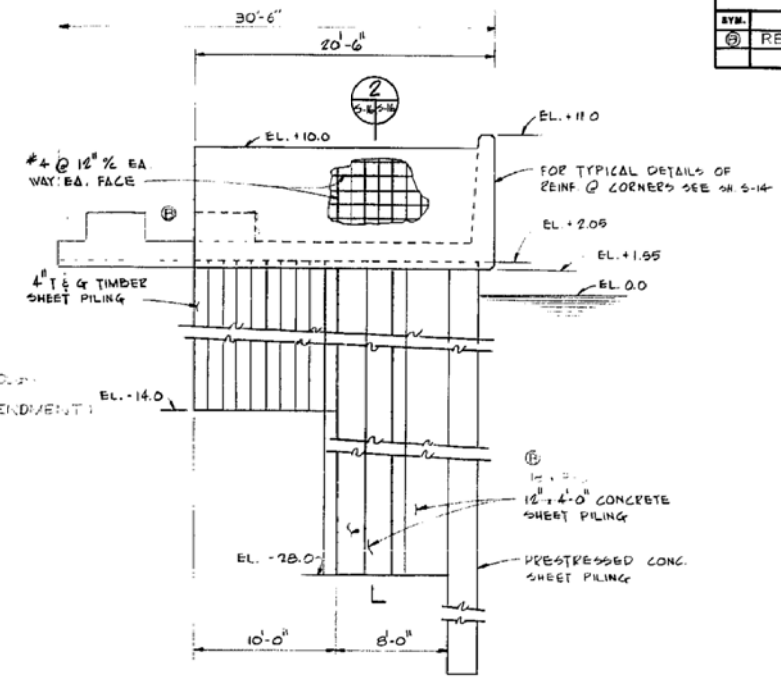

SECTION (1, S-14)

SCALE: 3/16"=1'-0"

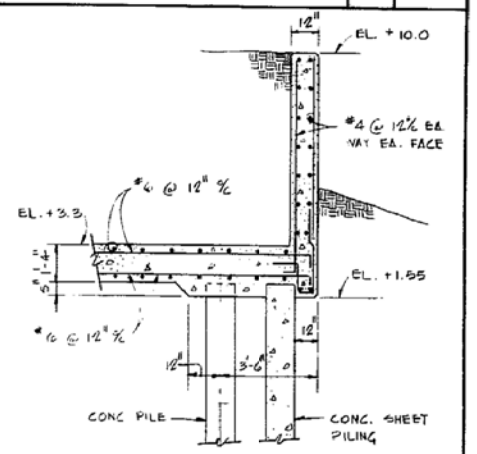

SECTION (2, S-14)

SCALE: 3/8"=1'-0"

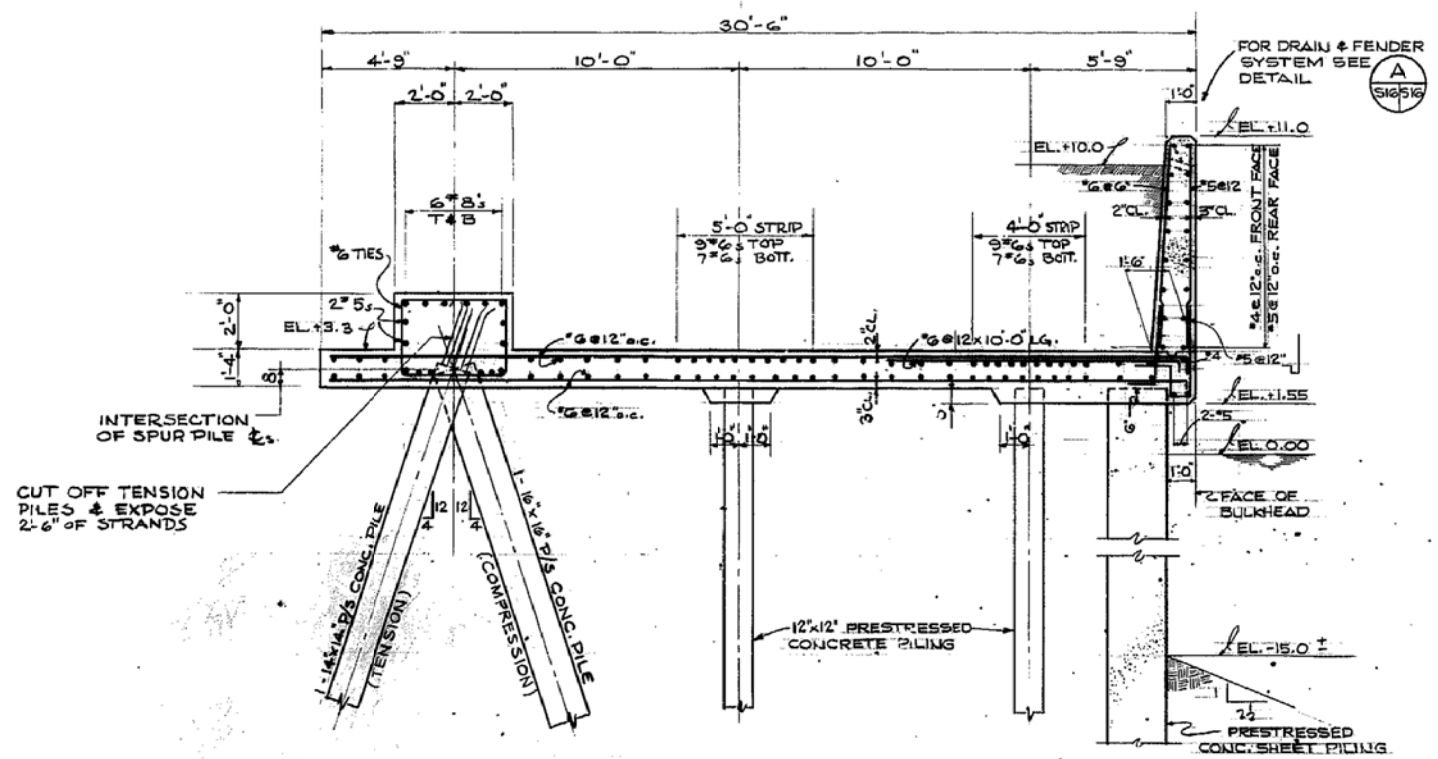

SECTION (4, S-16) TYP.

SCALE: 3/8"=1'-0"

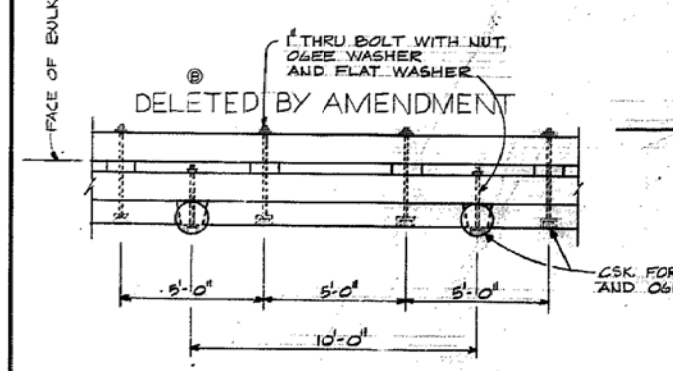

TYPICAL FENDER SYSTEM PLAN

SCALE: 3/8"=1'-0"

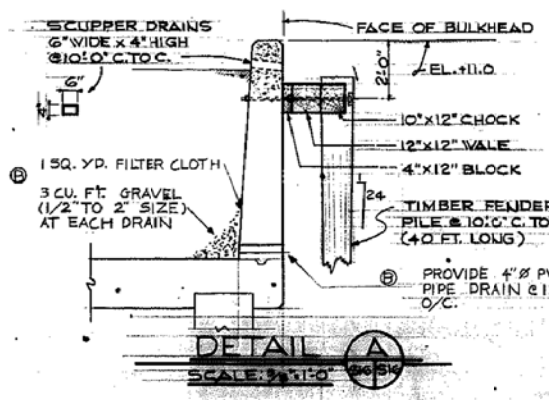

DETAIL (A, S16 S15)

SCALE: 3/8"=1'-0"

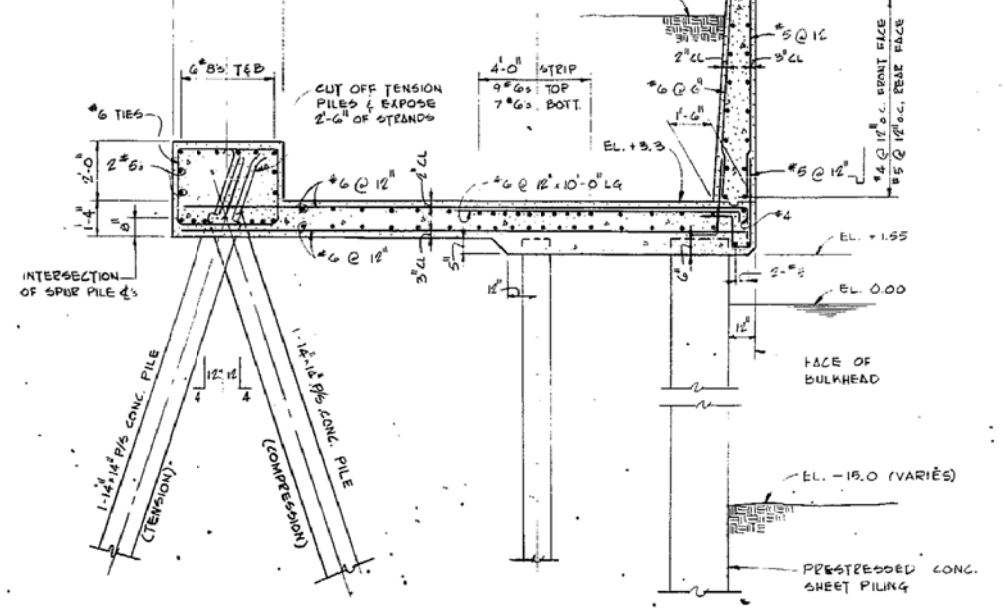

SECTION (5, S-16)

SCALE: 3/8"=1'-0"

GRAPHIC SCALE

3/8"=1'-0" 1" 0 1 2 3 4 5 6 7

3/16"=1'-0" 5' 0 5' 10'

RECORD DRAWING LETTER DATED 8 SEP 1982

S-16

DEPARTMENT OF THE NAVY — NAVAL FACILITIES ENGINEERING COMMAND

ATLANTIC DIVISION

NAVAL STATION NORFOLK, VIRGINIA

NAVAL STATION NORFOLK, VA

AFDL 47 MOORING FACILITIES

BULKHEAD - SECTIONS

JOB ORDER NO.	540M7576
DES.	V.R. JACKSON, P.E.
DRAWN	JDF / MCW
TR.	
CHK.	VRJ
SPEC. SUPV.	
RES. ENGR.	T.R. Dunham, P.E.
DES. SUP.	
SATISFACTORY SUP.	DATE
APPROVED	DATE
	12 JUN 1981

SIZE	DODGE SHEET NO.	NAVFAC DR DRWG NO.	
F	60091	4054301	
		CONTR. CONTR. NO.	N62470-77-B-7576
DRAWN/NOTED	SPEC. 05-77-7576	SHEET 27 OF 48	
		EFD DRWG NO.	154301

REVISIONS			
SYM.	DESCRIPTION	DATE	APPROVED
B	REVISED AS-BUILT	10-4-82	MDR

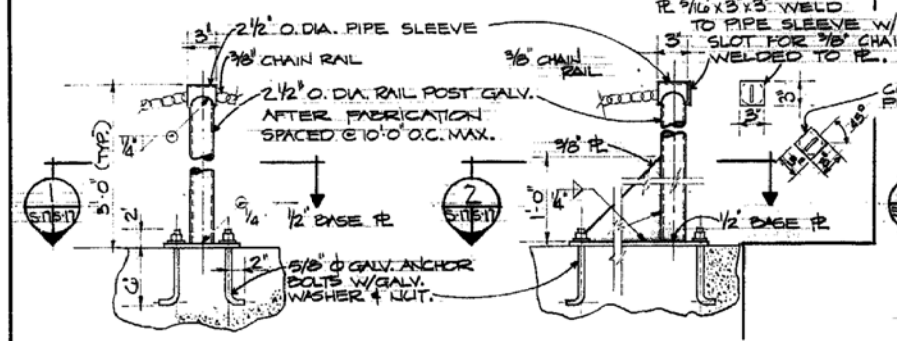

INTERMEDIATE RAIL POST

END RAIL POST (4 REQUIRED)

CORNER POST (2 REQUIRED)

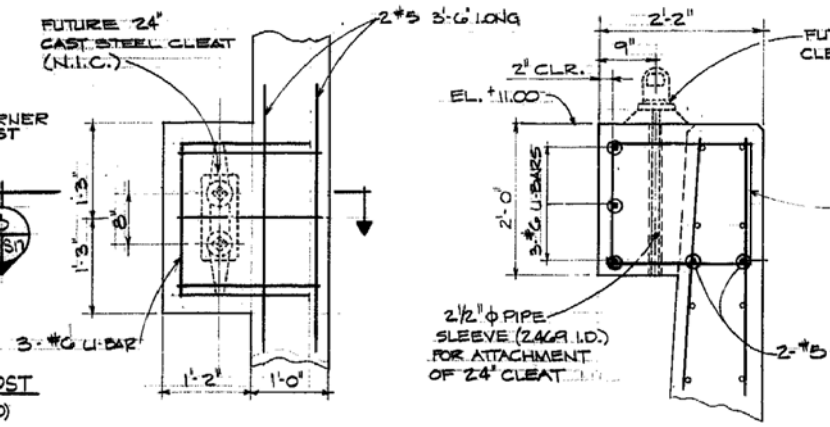

PLAN

SECTION 3 S-14 & S-17 / S-17

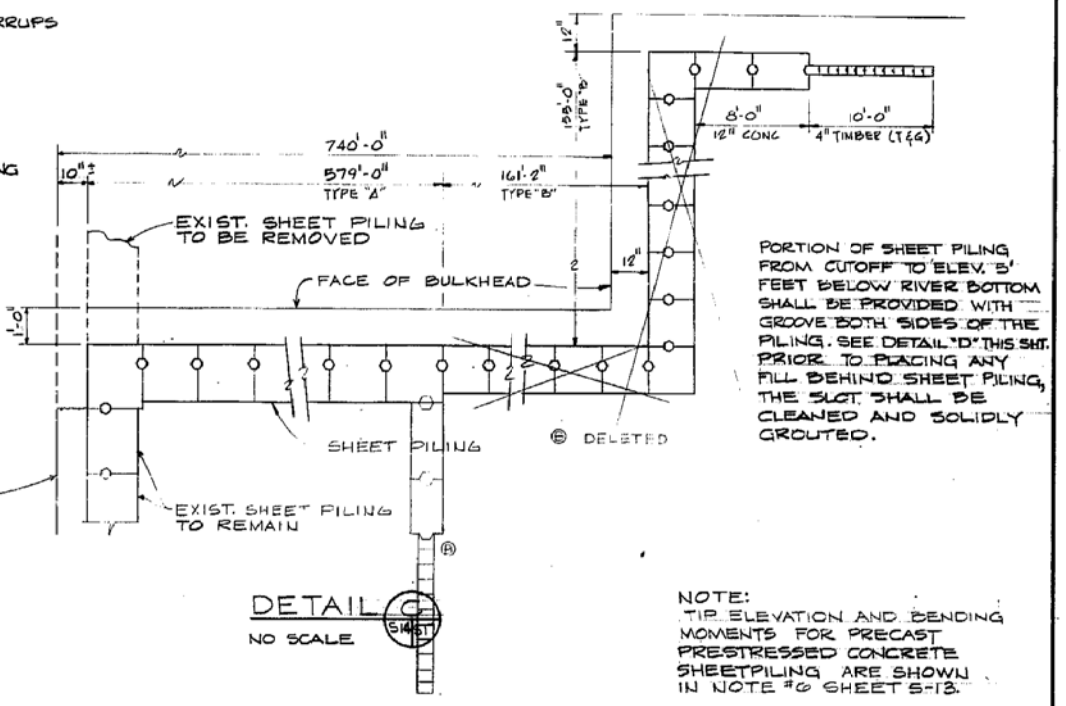

DETAIL C S-14 & S-17 / S-17

NO SCALE

PORTION OF SHEET PILING FROM CUTOFF TO ELEV. 5' FEET BELOW RIVER BOTTOM SHALL BE PROVIDED WITH GROVE BOTH SIDES OF THE PILING. SEE DETAIL "D" THIS SHT. PRIOR TO PLACING ANY FILL BEHIND SHEET PILING, THE SLOT SHALL BE CLEANED AND SOLIDLY GROUTED.

NOTE:
TIP ELEVATION AND BENDING MOMENTS FOR PRECAST PRESTRESSED CONCRETE SHEETPILING ARE SHOWN IN NOTE #6 SHEET S-13.

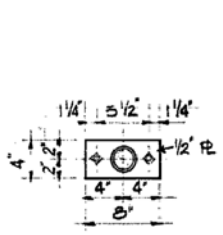

SECTION 1 S-17 / S-17

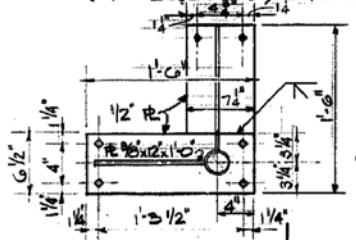

SECTION 2 S-17 / S-17

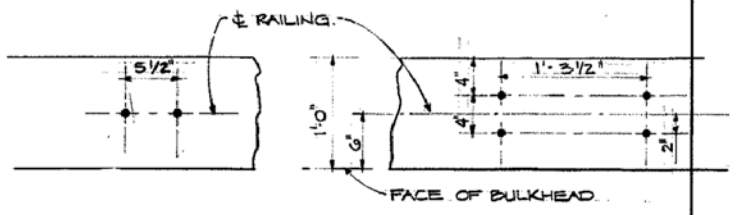

INTERMEDIATE POST END POST

RAILING POST CONCRETE PADS

DETAIL - CHAIN RAILING AT BULKHEAD A S-17 & S-17 / S-17

SCALE: 1½"=1'-0"

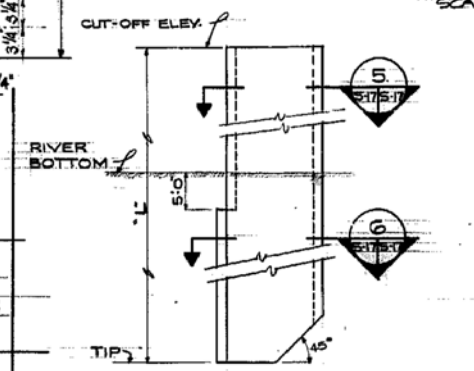

PRESTRESSED CONC. SHEET PILE DETAIL D S-17 & S-17 / S-17

NO SCALE

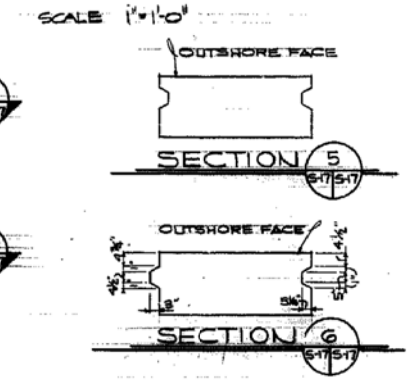

DETAIL - CLEAT SUPPORT PAD B S-17 & S-17 / S-17

SCALE 1"=1'-0"

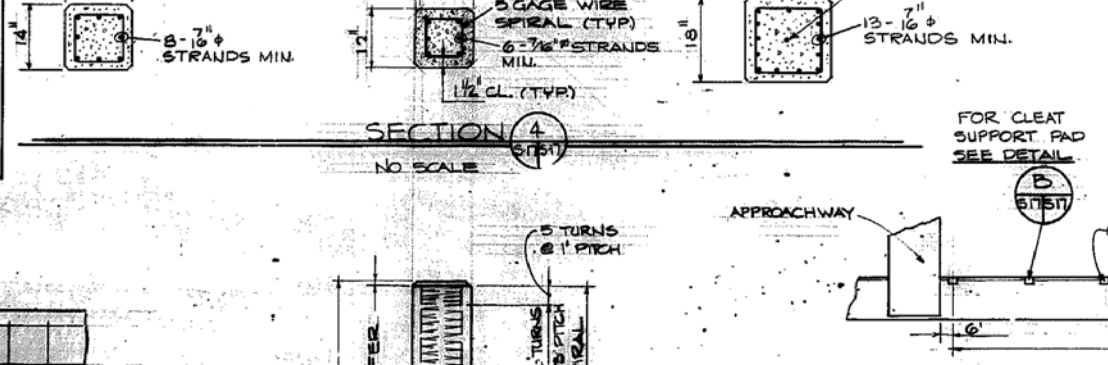

SECTION 4 S-17 / S-17

NO SCALE

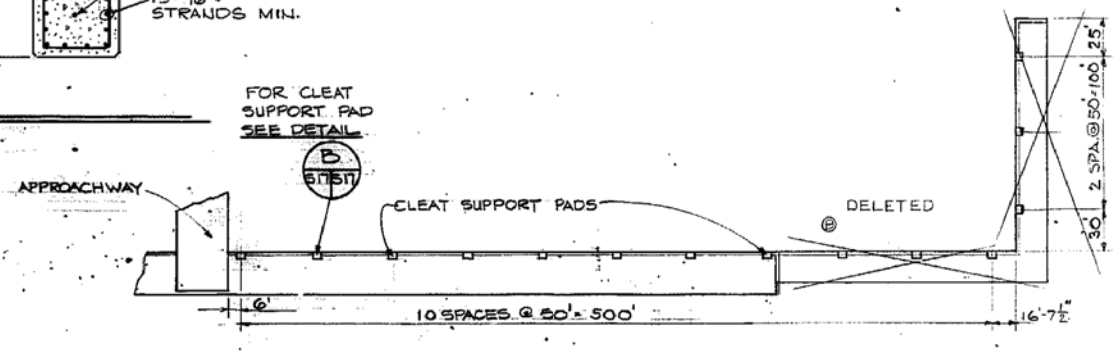

CLEAT PAD LOCATION PLAN

SCALE: 1" = 50'-0"

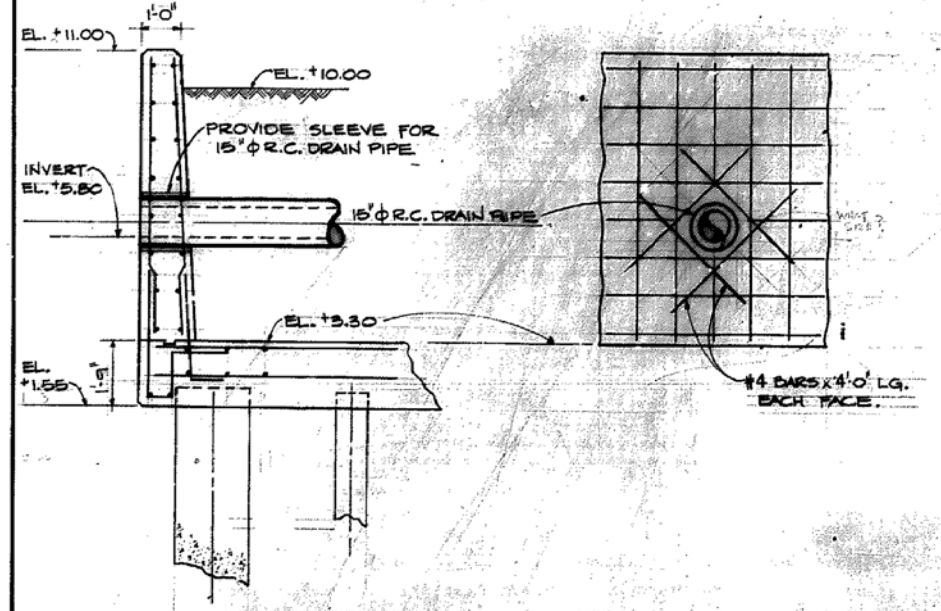

SECTION 5 S-17 / S-17

SCALE ½"=1'-0"

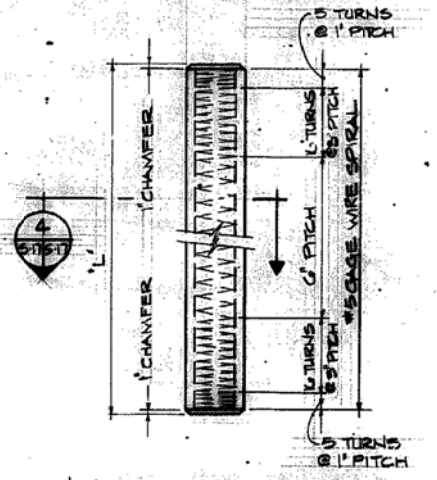

L = LENGTH OF PILE FROM PILE SCHEDULE PREPARED IN ACCORDANCE WITH TEST PILE DRIVING DATA & LOADING PROGRAM.

DETAIL OF PRECAST PRESTRESSED CONC. PILES E S-17 & S-17 / S-17

NO SCALE

GRAPHIC SCALE

SCALE ½"=1'-0" 12 0 1 2 3 4 5

SCALE 1"=1'-0" 12 6 0 2

SCALE 1½"=1'-0" 12 6 0

SCALE 1"=50'-0" 0 50 100 150

RECORD DRAWING
LETTER DATED 6 SEP 1988

S-17

S.T. HUDSON ENGINEERS, INC. 211 S. BROAD STREET PHILADELPHIA, PA.

DEPARTMENT OF THE NAVY NAVAL FACILITIES ENGINEERING COMMAND
ATLANTIC DIVISION
NAVAL STATION NORFOLK, VIRGINIA
NAVAL STATION NORFOLK, VA.

AFDL-47 MOORING FACILITIES

MISCELLANEOUS DETAILS

DES. VN DR. A.D.S. CHK. P.C.F.
PROJ. MGR. A.L.F. CH. ENGR. A.G.R.
CHARGE NO. 41-80
APPROVED DATE

SIZE F | CODE IDENT. NO. 80091 | 4034302
CONTR. NUMBER NO. N62470-77-B-7576
CONTRACTOR
DATE 05-77-7576
SHEET 28 OF 65
FSN 000 00- 154302