REVISIONS			
SYM.	DESCRIPTION	DATE	APPROVED

AFDM-10 TEE PIER AND BULKHEAD EXTENSION

NAVAL STATION, NORFOLK, VIRGINIA

INDEX OF DRAWINGS

SHEET NO.		EFD	NAVFAC	TITLE
1	T-1	178227	4078227	TITLE SHEET
2	D-1	178228	4078228	SOUNDING AND DREDGING PLAN
3	D-2	178229	4078229	DREDGING DETAILS
4	C-1	178230	4078230	DEMOLITION PLAN
5	C-2	178231	4078231	LAYOUT AND GRADING PLAN
6	C-3	178232	4078232	SECTIONS AND DETAILS
7	C-4	178233	4078233	DRAINAGE LAYOUT AND SECTIONS
8	B-1	178234	4078234	BORING LOCATION PLAN
9	B-2	178235	4078235	BORING LOGS I
10	B-3	178236	4078236	BORING LOGS II
11	S-1	178237	4078237	SITE PLAN - EXISTING CONDITIONS
12	S-2	178238	4078238	SITE PLAN - NEW CONSTRUCTION
13	S-3	178239	4078239	PIER EXTENSION PLAN/SECTION
14	S-4	178240	4078240	PIER EXTENSION REINFORCING DETAILS
15	S-5	178241	4078241	PIER EXTENSION - CONNECTION/END DETAILS
16	S-6	178242	4078242	PIER EXTENSION - UTILITY PAD/FITTING DETAILS
17	S-7	178243	4078243	PIER EXTENSION - MOORING BRACKET/TRENCH COVER
18	S-8	178244	4078244	PIER EXTENSION - MISCELLANEOUS DETAILS
19	S-9	178245	4078245	BULKHEAD PLANS AND DETAILS
20	S-10	178246	4078246	BULKHEAD PLANS, SECTIONS AND DETAILS
21	S-11	178247	4078247	BULKHEAD ELEVATIONS, SECTIONS AND DETAILS
22	S-12	178248	4078248	FLEET LANDING PIER DETAILS
23	S-13	178249	4078249	FLEET LANDING DETAILS/PIER DEMOLITION
24	S-14	178250	4078250	BREAKWATER REVISION DETAILS
25	M-1	178251	4078251	PIER EXTENSION UTILITY PLAN
26	M-2	178252	4078252	PIER EXTENSION SERVICE POINT SECTIONS
27	M-3	178253	4078253	PIER EXTENSION UTILITY DETAILS
28	M-4	178254	4078254	STEAM LINE PLAN/PROFILE
29	M-5	178255	4078255	STEAM LINE DETAILS
30	E-1	178256	4078256	PIER EXTENSION - ELECTRICAL PLAN/DETAILS
31	E-2	178257	4078257	ELECT. SITE / ONE LINE / FLEET LANDING PLANS
1 OF 1	S-15	178258	4078258	ADDNL. TURF SEEDING/MOD. DK. DR./MOD. LADDER/DETAILS

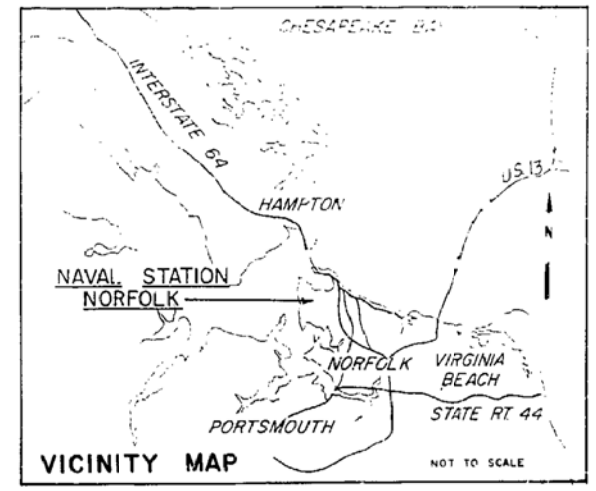

VICINITY MAP

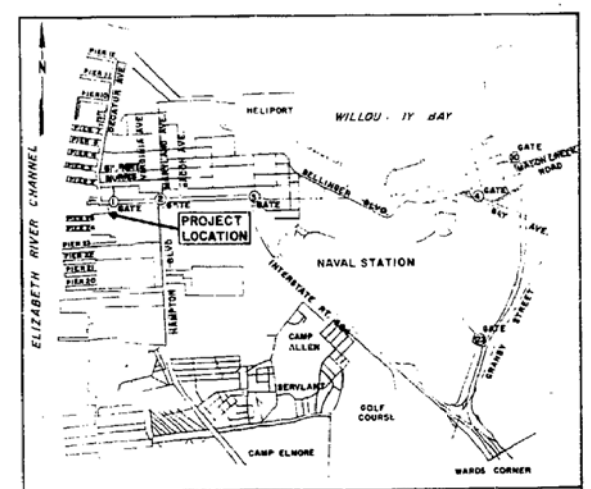

LOCATION PLAN NOT TO SCALE

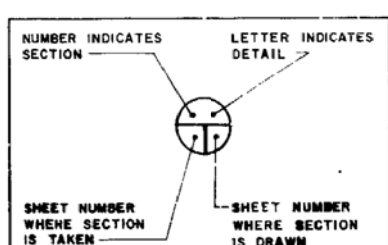

SECTION DETAIL SYMBOL

LEGEND

- T TITLE SHEET
- D DREDGING PLAN
- C CIVIL
- B SOIL BORING
- S STRUCTURAL
- M MECHANICAL
- E ELECTRICAL

AS BUILT DRAWING
LETTER DATED

T-1

EFD DWG NO	178227
JOB ORDER NO	749F2105
DES	H.D. KELLY, P.E.
DRWN	W.C.W.
TR	
CHK	
BR. MGR	
DES. DIR	
SATISFACTORY TO	DATE
APPROVED	DATE

FOR SFR FOR COMMANDER NAVFAC

DEPARTMENT OF THE NAVY — NAVAL FACILITIES ENGINEERING COMMAND
ATLANTIC DIVISION
NAVAL STATION — NORFOLK, VA.
NAVAL STATION — NORFOLK, VA.

AFDM-10 TEE PIER AND BULKHEAD EXTENSION

TITLE SHEET

FSC F	DATA BASE NO. 80091	DWG. NO. 4078227	CONTRACT NO. N62470-82-B-2105
SCALE NONE	DATE 05-82-2105	SHEET 1 OF 31	

REVISIONS			
SYM.	DESCRIPTION	DATE	APPROVED
(A)	REVISED: AS-BUILT.	[illegible]	[illegible]

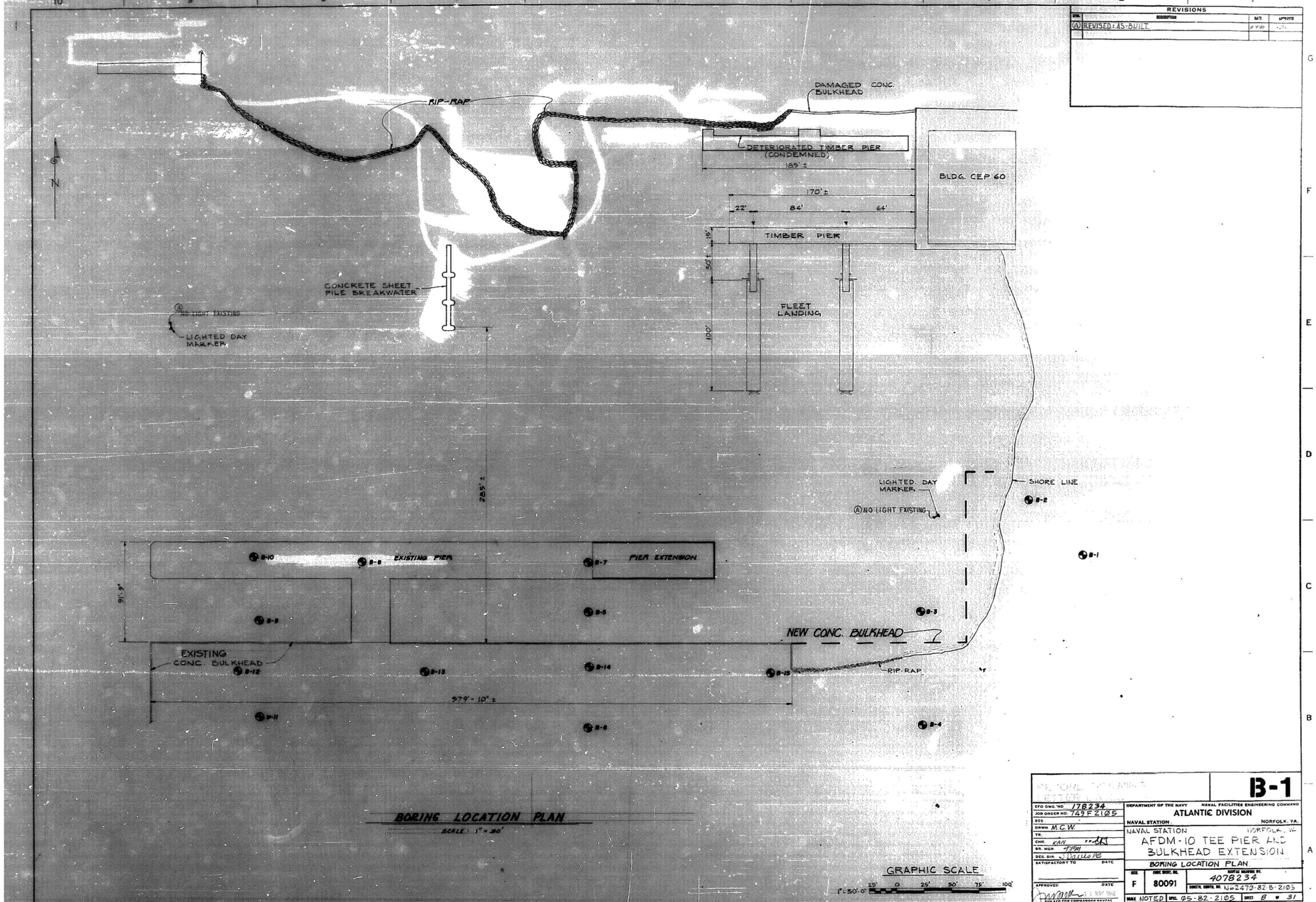

BORING LOCATION PLAN

SCALE: 1" = 50'

GRAPHIC SCALE

1" = 50'-0" 25' 0 25' 50' 75' 100'

B-1

EFD DWG. NO. 178234	DEPARTMENT OF THE NAVY — NAVAL FACILITIES ENGINEERING COMMAND
JOB ORDER NO. 749F2105	ATLANTIC DIVISION
DES.	NAVAL STATION — NORFOLK, VA.
DRWN. M.C.W.	NAVAL STATION — NORFOLK, VA.
TR.	AFDM-10 TEE PIER AND BULKHEAD EXTENSION
CHK. KAN	BORING LOCATION PLAN
BR. MGR.	SIZE: F — CODE IDENT. NO. 80091 — MASTER DRAWING NO. 4078234
DES. DIR.	CONSTR. CONTR. NO. N62470-82-B-2105
SATISFACTORY TO — DATE	SCALE: NOTED — SPEC. 05-82-2105 — SHEET 8 OF 31
APPROVED — DATE	
FOR EFD FOR COMMANDER NAVFAC	

BORING LOGS

BORING No. B-1 — SURFACE ELEV. +6.9'

DESCRIPTION	N
GREY COARSE TO FINE SAND, FILL MATERIAL - LOOSE	6
GREY TO BLACK MEDIUM TO FINE SAND, CINDERS, ORGANICS, ETC. FILL MATERIAL	5
GREY TO BLACK SAND, CINDERS, SHELL, ETC. - FILL MATERIAL	4
DARK GREY TO BLACK MEDIUM TO FINE SAND - MEDIUM	14
DARK GREY TO BLACK MEDIUM TO FINE SAND - DENSE	58
GRAY SILTY CLAY - SOFT	5
GRAY SILTY CLAY - SOFT	UD PR
DARK BROWN TO BLACK ORGANIC SILTY CLAY - SOFT	4
DARK BROWN TO BLACK ORGANIC SILTY CLAY, SOFT	6
DARK BROWN TO BLACK ORGANIC SILTY CLAY, TRACE VERY FINE SAND IN LENSES, SLIGHTLY MICACEOUS - SOFT	5
DARK BROWN TO BLACK SILTY VERY FINE SAND, ORGANIC SLIGHTLY MICACEOUS - LOOSE	7
GREY FINE SAND - MEDIUM	24
GREENISH GREY FINE TO VERY FINE SAND WITH SHELL FRAGMENTS - SOME SILT - MED.	27
GREENISH GREY FINE TO VERY FINE SAND WITH SHELL FRAGMENTS - TRACE SILT - MED	21
GREENISH GREY FINE TO VERY FINE SAND WITH SHELL FRAGMENTS - MEDIUM	28
BOTTOM OF BORING - 55.1'	

BORING No. B-2 — SURFACE ELEV. +2.9'

DESCRIPTION	N
TAN FINE SAND, SOME MEDIUM SAND - LOOSE	5
WOOD	46
TAN GREY COARSE TO FINE SAND - DENSE	35
GREY COARSE TO FINE SAND, TRACE GRAVEL - DENSE	60
TAN MEDIUM TO FINE SAND - MEDIUM	21
LIGHT GREY SILTY CLAY - SOFT	3
LIGHT GREY SILTY CLAY - SOFT	7
BROWNISH GREY TO BLACK ORGANIC SILTY CLAY	10
BROWNISH GREY ORGANIC SILTY CLAY - SOFT	7
GREY FINE SAND MEDIUM	16
GREY FINE TO VERY FINE SAND - DENSE	34
GREENISH GREY FINE TO VERY FINE SAND SOME SHELL FRAGMENTS - MEDIUM	20
GREENISH GREY FINE TO VERY FINE SAND SOME SHELL FRAGMENTS - MEDIUM	18
GREENISH GRAY FINE TO VERY FINE SAND TRACE UP SILT, SOME SHELL FRAGMENTS MEDIUM	19
GREENISH GREY FINE TO VERY FINE SAND SOME SHELL FRAGMENTS - DENSE	37
BOTTOM OF BORING - 64.1'	

BORING No. B-3 — SURFACE ELEV. -0.5'

DESCRIPTION	N
WATER	
DARK GREY SILTY CLAY VERY SOFT	PU PU
DARK GREY SILTY CLAY VERY SOFT	PU PU
DARK GREY SILTY CLAY	UD PR PR
TAN TO LIGHT GREY MEDIUM TO FINE SAND - MEDIUM	22
TAN MEDIUM TO FINE SAND MEDIUM	12
BROWNISH GREY ORGANIC SILTY CLAY - SOFT	7
BROWNISH GREY ORGANIC SILTY CLAY - SOFT	6
BROWNISH GREY ORGANIC SILTY CLAY - SOFT	9
BROWNISH GREY ORGANIC SILTY CLAY, LAYERS OF ORGANIC MATERIAL (WOOD) AT 36' - SOFT	14
GREY SANDY SILT - LOOSE	13
LIGHT GREY FINE SAND - MEDIUM	
LIGHT GREY FINE SAND - MEDIUM	17
GREENISH GREY FINE TO VERY FINE SAND SOME SHELL FRAGMENTS - MEDIUM	28
GREENISH GREY FINE TO VERY FINE SAND, SOME SHELL FRAGMENTS - DENSE	
GREENISH GREY FINE TO VERY FINE SAND, SOME SILT, SOME SHELL FRAGMENTS - DENSE	41
GREENISH GREY FINE TO VERY FINE SAND, SOME SILT, SOME SHELL FRAGMENTS - DENSE	39
BOTTOM OF BORING - 62.0'	

BORING No. B-4 — SURFACE ELEV. +10.0'

DESCRIPTION	N
BROWN SAND, SILT-CINDERS ETC. - FILL MATERIAL	9
BROWN COARSE TO FINE SAND, SOME CLAY - FILL MAT.	6
BROWN TO BLACK SAND, SILT, CINDERS, ETC. - FILL MATERIAL	5
DARK GREY SILTY CLAY - SOFT	3
GREY MEDIUM TO FINE SAND SOME SHELL FRAGMENTS MEDIUM	7
LIGHT GREY MEDIUM TO FINE SAND - LOOSE	4
GREY SILTY CLAY	UD PR
DARK BROWN TO BLACK ORGANIC SILTY CLAY - SOFT	2
	UD PR
DARK BROWN TO BLACK ORGANIC SILTY CLAY - LENSES OF VERY FINE SAND - SOFT	4
DARK BROWN ORGANIC SILTY CLAY, SOME LENSES OF VERY FINE SAND	UD PR
DARK BROWN TO DARK GREY VERY FINE SAND SOME SILT, ORGANIC SLIGHTLY MICACEOUS LOOSE	4
DARK GREY FINE SAND SOME WHAT ORGANIC - MEDIUM	20
DARK GREY TO GREENISH GREY SILTY VERY FINE SAND SOME CLAY - MEDIUM	11
GREENISH GREY FINE TO VERY FINE SAND WITH SHELL FRAGMENTS - SOME SILT - MED.	14
GREENISH GREY FINE TO VERY FINE SAND WITH SHELL FRAGMENTS - MEDIUM	14
GREENISH GREY VERY FINE SAND WITH SHELL FRAGMENTS - MEDIUM	26
BOTTOM OF BORING - 52.0'	

BORING No. B-5 — SURFACE ELEV. -5.5'

DESCRIPTION	N
WATER	
GREY TO BLACK SAND, SILT AND CLAY - LOOSE	PU PU
GREY MEDIUM TO FINE SAND, SILT AND CLAY - LOOSE	PU PU
LIGHT GREY SILTY CLAY - SOFT	10
GREY BROWN TO BLACK ORGANIC SILTY CLAY TRACE VERY FINE SAND IN THIN LAYERS - SOFT	6
GREY BROWN ORGANIC SILTY CLAY TRACE VERY FINE SAND IN LENSES, SLIGHTLY MICACEOUS - SOFT	7
GREY BROWN ORGANIC SILTY CLAY, SLIGHTLY MICACEOUS - SOFT	6
BROWN GREY TO BLACK ORGANIC SILTY CLAY, TRACE VERY FINE SAND - SOFT	9
GREY FINE SAND, SOME ORGANIC LENSES, SOME SILT - LOOSE	10
GREY BROWN ORGANIC SANDY SILT, SOME CLAY - LOOSE	7
GREY FINE SAND, SOME MEDIUM SAND, TRACE SILT - MEDIUM	19
GREENISH GREY FINE TO VERY FINE SAND TRACE SILT, SOME SHELL FRAGMENTS DENSE	33
GREENISH GREY FINE TO VERY FINE SAND, TRACE SILT, SOME SHELL FRAGMENTS - MEDIUM	26
BOTTOM OF BORING - 62.0'	

BORING No. B-6 — SURFACE ELEV. +7.1'

DESCRIPTION	N
BLACK SAND, SILT, CLAY, WOOD, ETC. - FILL MATERIAL	14
TAN TO GREY FINE SAND, TRACE SHELL - MEDIUM	20
GREY FINE SAND, SOME SHELL FRAGMENTS - LOOSE	5
GREY MEDIUM TO FINE SAND - MEDIUM	12
GREY COARSE TO FINE SAND - MEDIUM	10
GREY FINE SAND - MEDIUM	14
LIGHT GREY FINE SAND - LOOSE	11
BLUE GREY SANDY SILT AND CLAY - SOFT	5
DARK GREY TO GREENISH GREY SILTY VERY FINE SAND SLIGHTLY MICACEOUS LOOSE	5
DARK BROWN SILTY CLAY, SLIGHTLY MICACEOUS - SOFT	6
GREENISH GREY VERY FINE SAND SOME SHELL FRAGMENTS TRACE SILT - MEDIUM	14
GREENISH GREY FINE TO VERY FINE SAND, TRACE SILT, SOME SHELL FRAGMENTS MEDIUM	19
GREENISH GREY SILTY FINE TO VERY FINE SAND, WITH SHELL FRAGMENTS - MEDIUM	23
GREENISH GREY VERY FINE SAND WITH SHELL FRAGMENTS - DENSE	39
BOTTOM OF BORING - 54.9'	

BORING No. B-7 — SURFACE ELEV. -14.5'

DESCRIPTION	N
WATER	
DARK GREY TO BLACK SILTY CLAY - VERY SOFT	PU
DARK GREY TO BLACK SILT AND CLAY - VERY SOFT	PU PU
DARK GREY TO BLACK SILT AND CLAY	PR PR
DARK GREY SILTY CLAY - VERY SOFT	PU PU
BROWNISH GREY SILTY CLAY, ORGANIC - SOFT	5
BROWN TO BLACK ORGANIC MATERIAL WITH SILT AND CLAY - SOFT	7
DARK GREY SILTY FINE SAND TRACE CLAY - MEDIUM	16
GREY MEDIUM TO FINE SAND SOME SHELL FRAGMENTS DENSE	32
GREY MEDIUM TO FINE SAND TRACE SHELL FRAGMENTS MEDIUM	23
GREENISH GREY FINE TO VERY FINE SAND TRACE SILT, SOME SHELL FRAGMENTS MEDIUM	21
GREENISH GREY FINE TO VERY FINE SAND TRACE SILT, SOME SHELL FRAGMENTS - MEDIUM	29
BOTTOM OF BORING - 62.0'	

BORING No. B-8 — SURFACE ELEV. -9.8'

DESCRIPTION	N
WATER	
LIGHT GREY MEDIUM TO FINE SAND SOME SHELL FRAGMENTS LOOSE	PU PU
GREY MEDIUM TO FINE SAND LENSES OF SILTY CLAY AND ORGANICS - VERY LOOSE	PU PU
TAN TO BROWN MEDIUM TO FINE SAND - MEDIUM	15
LIGHT GREY SILTY CLAY MEDIUM	
BROWNISH GREY ORGANIC SILTY CLAY - SOFT	6
BROWNISH GREY ORGANIC SILTY CLAY, TRACE VERY FINE SAND IN LENSES - SOFT	7
LIGHT BLUE GREY SILT, SOME CLAY, SOME VERY FINE SAND - SOFT	6
ORGANIC MATERIAL WOOD - SOFT	
BROWNISH GREY ORGANIC SILTY CLAY - MEDIUM	23
GREY FINE TO VERY FINE SAND - MEDIUM	
GREY FINE TO VERY FINE SAND TRACE SHELL FRAGMENTS - MED.	22
GREY FINE SAND, TRACE SHELL FRAGMENTS, SOME ORGANICS, WOOD - MEDIUM	18
GREY FINE TO VERY FINE SAND, SOME SILTY CLAY IN LENSES	18
GREENISH GREY FINE TO VERY FINE SAND, TRACE SILT, SOME SHELL FRAGMENTS - DENSE	37
BOTTOM OF BORING - 62.0'	

BORING No. B-9 — SURFACE ELEV. -8.5'

DESCRIPTION	N
WATER	
TAN COARSE TO FINE SAND AND GRAVEL - LOOSE	PU PU
LIGHT GREY FINE TO VERY FINE SAND - LOOSE	PU PU
TAN MEDIUM TO FINE SAND - MEDIUM	15
GREY SILTY CLAY - SOFT	8
DARK BROWN TO BLACK ORGANIC SILTY CLAY - SOFT	4
BROWNISH GREY ORGANIC SILTY CLAY - SOFT	6
BROWNISH GREY ORGANIC SILTY CLAY - SOFT	7
BROWN TO BLACK ORGANIC MATERIAL - WOOD - SOFT	5
LIGHT GREY FINE TO VERY FINE SAND - LOOSE	
LIGHT GREY SILTY CLAY LAYER OF WOOD AT 45.5' - SOFT	6
GREY MEDIUM TO FINE SAND - VERY DENSE	31
GREENISH GREY FINE TO VERY FINE SAND SOME SHELL FRAGMENTS - MEDIUM	16
GREENISH GREY FINE TO VERY FINE SAND SOME SHELL FRAGMENTS - DENSE	30
BOTTOM OF BORING - 62.0'	

BORING No. B-10 — SURFACE ELEV. -19.5'

DESCRIPTION	N
WATER	
GREY TO BROWN [illegible] SAND, SILT & CLAY [illegible]	PU PU
GREY SILTY CLAY [illegible] OF MEDIUM TO FINE SAND	UD PR PR
BROWN [illegible] MATERIAL [illegible] AND CLAY - SOFT	11
BROWNISH GREY [illegible] SILTY CLAY - SOFT	5
[illegible] SILTY CLAY [illegible]	6
BROWN TO BLACK ORGANIC MATERIAL (WOOD AND [illegible]) WITH SILT AND CLAY [illegible]	11
BROWNISH GREY FINE SAND, SOME VERY FINE SAND - MEDIUM	14
GREY SILTY FINE SAND LAYERS OF SILTY CLAY, LAYERS OF ORGANIC MATERIAL (WOOD) - LOOSE	10
GREY FINE SAND TRACE MEDIUM SAND, TRACE SHELL FRAGMENTS - MEDIUM	21
GREENISH GREY FINE TO VERY FINE SAND, TRACE SILT, SOME SHELL FRAGMENTS - MEDIUM	47
GREENISH GREY FINE TO VERY FINE SAND, SOME SILT, SOME SHELL FRAGMENTS - DENSE	45
GREENISH GREY SILTY FINE TO VERY FINE SAND, SOME SHELL FRAGMENTS - DENSE	30
BOTTOM OF BORING - 67.0'	

BORING No. B-11 — SURFACE ELEV. +3.4'

DESCRIPTION	N
BLACK SAND [illegible] WOOD ETC. - FILL MATERIAL	
BROWN [illegible] SAND [illegible] FILL MATERIAL	
BLACK SAND [illegible] ETC. - FILL MATERIAL	
[illegible] SAND [illegible]	
GREY COARSE TO FINE SAND, TRACE SHELL FRAGMENTS, LAYERS [illegible]	25
GREY [illegible] TO FINE SAND, TRACE [illegible] FRAGMENTS [illegible]	25
BROWN [illegible] FINE SAND [illegible]	24
[illegible] MICACEOUS [illegible]	
GREY TO BLACK [illegible] SILTY CLAY - SOFT	6
BLACK OR [illegible] TRACE [illegible] MED.	11
GREY FINE SAND, SOME [illegible] FINE SAND [illegible]	25
GREY MEDIUM TO FINE SAND MEDIUM	18
GREY TO GREENISH GREY FINE SAND AND SHELL FRAGMENTS - SOME [illegible] DENSE	
GREY TO GREENISH GREY FINE SAND WITH SHELL FRAGMENTS - DENSE	
BOTTOM OF BORING - 51'	

ELEVATION: +5, 0.0, -5, -10, -15, -20, -25, -30, -35, -40, -45, -50, -55, -60, -65

GENERAL NOTES:

1. BORINGS ADVANCED BY WASHING.
2. "N" COLUMN INDICATES NUMBER OF BLOWS REQUIRED TO DRIVE 2" O.D. SPLIT SPOON SAMPLER ONE FOOT INTO UNDISTURBED SOIL WITH A 140 LB. HAMMER FALLING 30" AS PER ASTM TEST D-1586 AT IT'S GRAPHIC DEPTH.
3. ALL DEPTHS AND LOCATIONS ARE APPROXIMATE.
4. BORINGS B-1 THROUGH B-11 DRILLED BY "HERBERT AND ASSOCIATES" IN 1978.
5. DESCRIPTION OF SOIL CLASSIFICATION ON BASIS OF VISUAL ESTIMATE BY DRILLER WITH LATER LABORATORY CLASSIFICATION OF GROUPS.
6. BORING LOCATIONS ARE SHOWN ON SHEET B-1.
7. ALL BORINGS DRILLED PRIOR TO DREDGING ASSOCIATED WITH CONST. OF EXISTING T PIER. FOR EXTENT OF EXISTING PIER DREDGING SEE SHEET D-1.

GRAPHIC SCALE (1" = 4' VERTICAL)

4 0 4 8 12 16 20 24

W.H. = WEIGHT OF HAMMER - 140 LBS.
UD = UNDISTURBED SAMPLE
PU = PUSH / FORCE OF FOOT OR HAND
PR = PRESS; 500 P.S.I.

RECORD DRAWING
LETTER DATED 11 APR 1984

B-2

DEPARTMENT OF THE NAVY — NAVAL FACILITIES ENGINEERING COMMAND — ATLANTIC DIVISION — NORFOLK, VA.
NAVAL STATION — NORFOLK, VA.
AFDM-10 TEE PIER AND BULKHEAD EXTENSION
BORING LOGS I

EFD DWG. NO. 178235
JOB ORDER NO. 741 F 2105
CHK. KAH
APPROVED — DATE 12 MAY 1982
F 80091 — 4078235
N62470-82-B-2105
1"=4' — 05-82-2105 — 9 of 31

REVISIONS: SYM. | DESCRIPTION | DATE | APPROVED

REVISIONS			
SYM.	DESCRIPTION	DATE	APPROVED

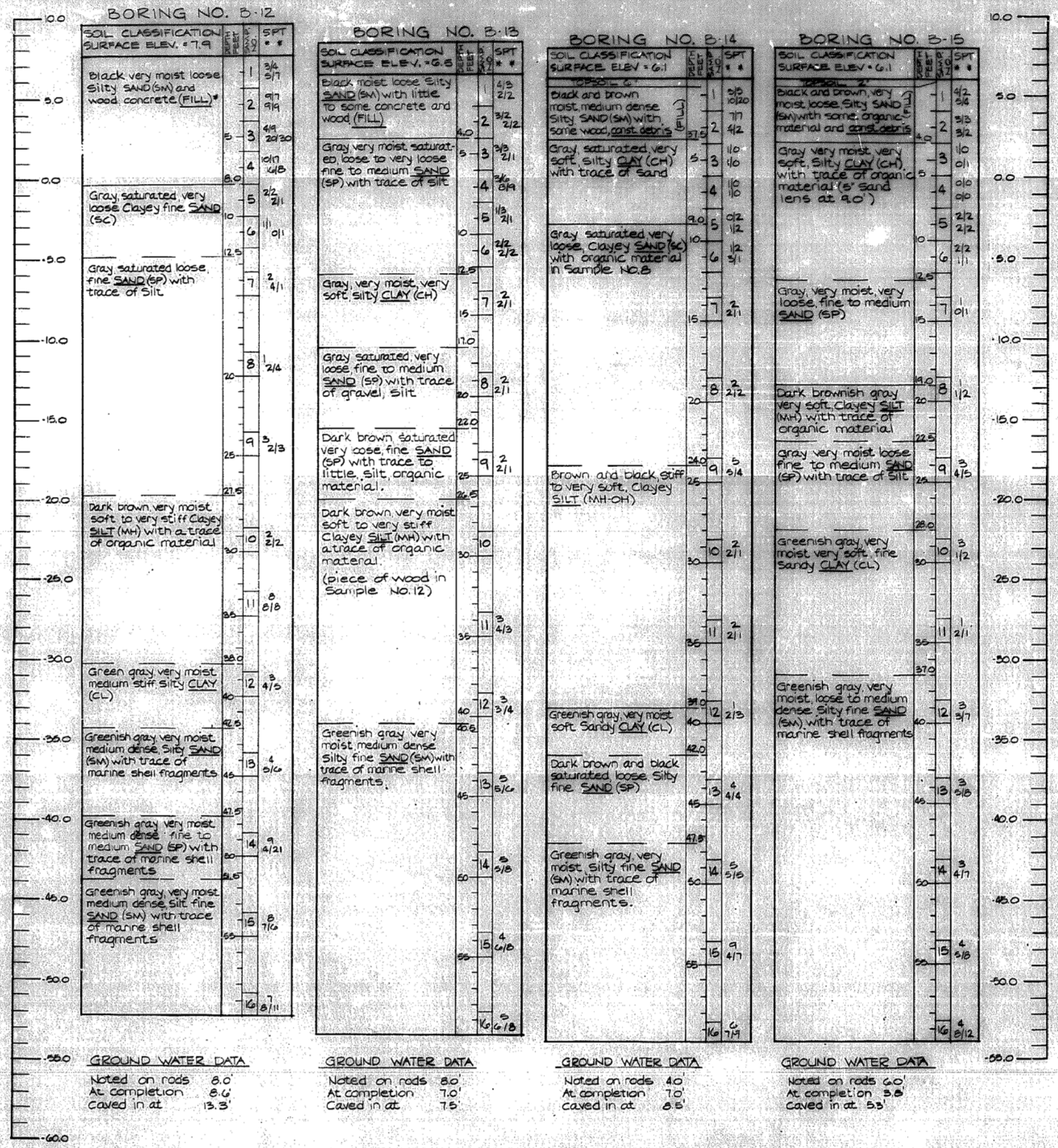

GENERAL NOTES:

1. * High blow counts due to large piece of wood.
2. ** Standard Penetration Test - blows per 6".
3. Borings Advanced by Washing.
4. All Depths and Locations are Approximate.
5. Borings B-12 through B-15 Drilled by ATEC ASSOCIATES of VIRGINA. Between Feburary 21, 1979. and Feburary 27, 1979.
6. Discription of Soil Classification on Basis of Visual Estimate by Driller With Later Laboratory Classification of Groups.
7. Boring Locations Are Shown on Sheet B-1.
8. ALL BORINGS DRILLED PRIOR TO DREDGING ASSOCIATED WITH CONSTRUCTION OF EXISTING T. PIER. FOR EXTENT OF EXISTING PIER DREDGING SEE SHEET D-1.

B-3

EFD DWG. NO. 178236
JOB ORDER NO. 749 F2105
DES.
DRWN.
TR.
CHK. KAN
BR. MGR.
DES. DIR.
SATISFACTORY TO DATE
APPROVED DATE
FOR EFD FOR COMMANDER NAVFAC

DEPARTMENT OF THE NAVY NAVAL FACILITIES ENGINEERING COMMAND
ATLANTIC DIVISION
NAVAL STATION NORFOLK, VA.
NAVAL STATION NORFOLK, VA.
AFDM-10 TEE PIER AND BULKHEAD EXTENSION
BORING LOGS II
F 80091 4078236
N62470-82-B-2105
1" = 3' 05-82-2105 10 of 31

REVISIONS			
SYM.	DESCRIPTION	DATE	APPROVED
(2)	REVISED: AS-BUILT	5/12/85	HDK

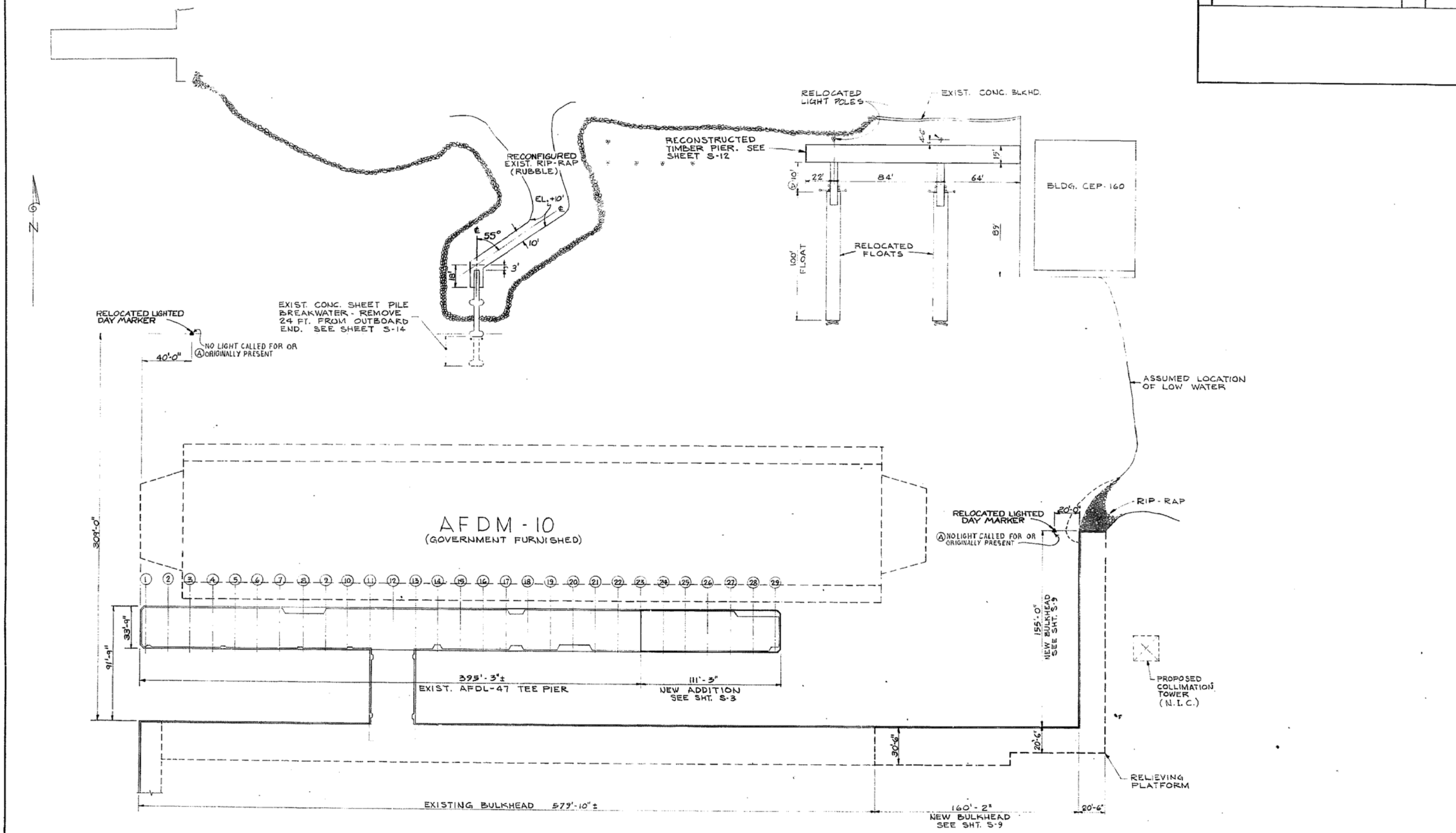

PLAN
SCALE: 1" = 30'-0"

GRAPHIC SCALE
1" = 30'-0" 25' 0 25' 50' 75' 100'

RECORD DRAWING
LETTER DATED 11 APR 1984

S-2

EFD DWG. NO.	178238
JOB ORDER NO.	749F2105
DES	H.D. KELLY, P.E.
DRWN.	M.C.W.
TR.	
CHK.	VRJ
DR. MGR.	F.P. Andrews, P.E.
DES. DIR.	
SATISFACTORY TO	DATE
APPROVED	DATE 12 MAY 1982

FOR EFD FOR COMMANDER NAVFAC

DEPARTMENT OF THE NAVY — NAVAL FACILITIES ENGINEERING COMMAND
ATLANTIC DIVISION
NAVAL STATION — NORFOLK, VA.

NAVAL STATION NORFOLK, VA.
AFDM-10 TEE PIER AND BULKHEAD EXTENSION
SITE PLAN - NEW CONSTRUCTION

SIZE	CODE IDENT NO.	DWG NO.
F	80091	4078238
		N62470-82-2105
SCALE NOTED	DWG. 05-82-2105	SHEET 12 OF 31

REVISIONS			
SYM.	DESCRIPTION	DATE	APPROVED
(A)	REVISED AS-BUILT	5/8/85	MCR

NOTE:
FOR TIP ELEVATIONS AND DESIGN CRITERIA FOR P/C P/S CONCRETE SHEET PILING, SEE BULKHEAD NOTES THIS SHEET.

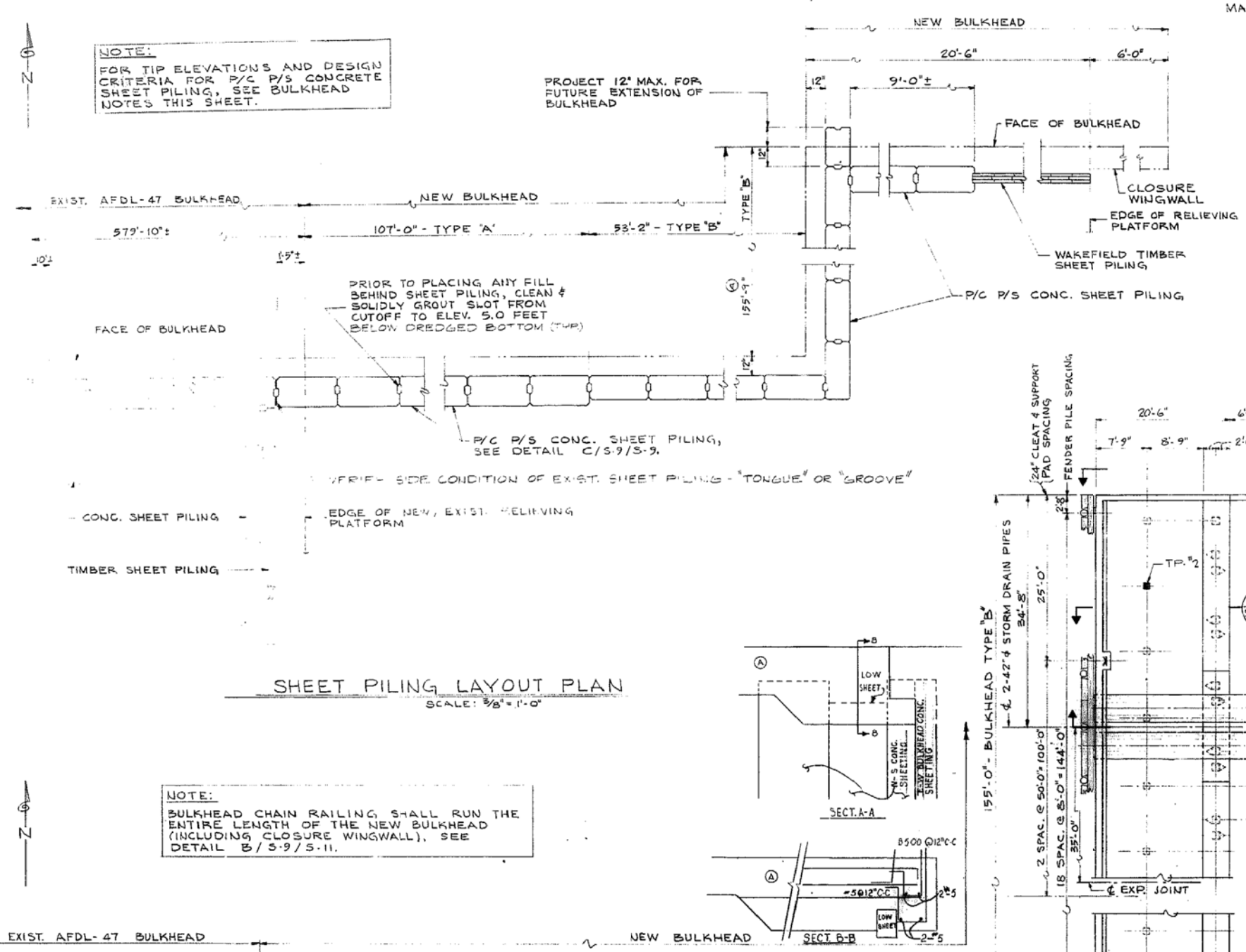

SHEET PILING LAYOUT PLAN
SCALE: 3/8" = 1'-0"

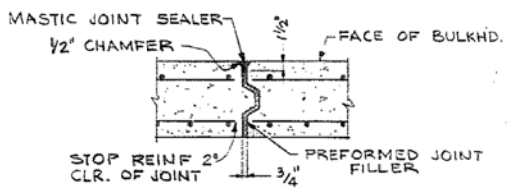

WALL EXPANSION JOINT
DETAIL A S-9/S-9
NO SCALE S-10

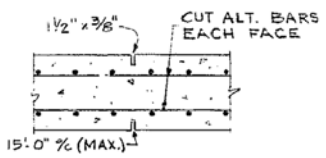

WALL CONTROL JOINT
DETAIL B S-9/S-9
NO SCALE

P/C P/S CONC. PILE SPACING, SEE DETAIL C S-9/S-11

NOTE:
BULKHEAD CHAIN RAILING SHALL RUN THE ENTIRE LENGTH OF THE NEW BULKHEAD (INCLUDING CLOSURE WINGWALL), SEE DETAIL B/S-9/S-11.

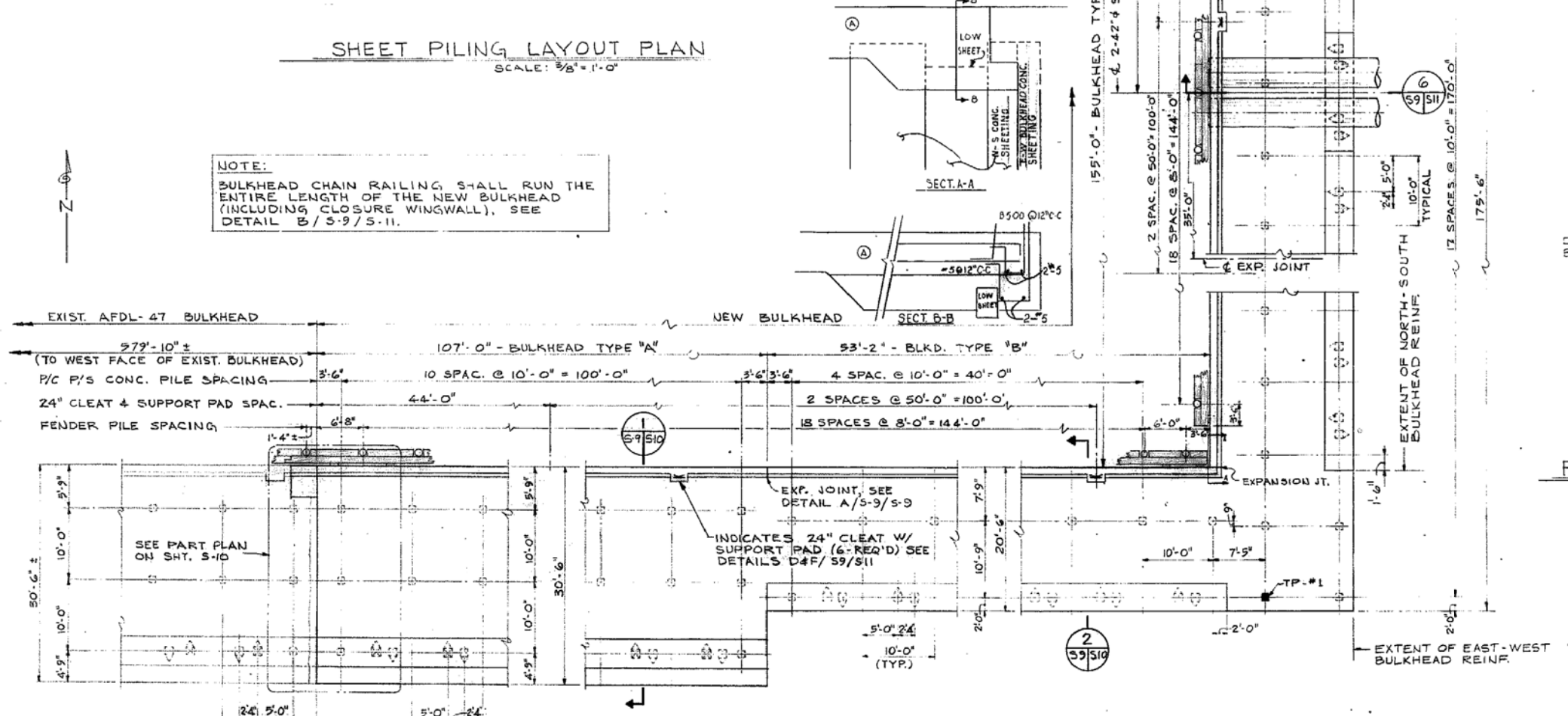

PLAN OF BULKHEAD
SCALE: 1/8" = 1'-0"

BULKHEAD NOTES

1. MATERIALS

CAST-IN-PLACE CONCRETE	fc' = 4000 psi @ 28 DAYS
PRECAST PRESTRESSED CONCRETE	fc' = 6000 psi @ 28 DAYS
REINFORCING STEEL	ASTM A615, GRADE 60
STRUCTURAL STEEL	ASTM A36, Fy = 36,000 psi
ANCHOR BOLTS	ASTM A307
WELDING	E70XX ELECTRODES
TIMBER FENDER SYSTEM & WAKEFIELD SHEET PILING	Fb = 1100 psi
TIMBER FENDER PILES	DOUGLAS FIR OR SOUTHERN PINE

2. DESIGN LIVE LOAD IS 300 PSF (SURCHARGE).

3. BULKHEAD RELIEVING PLATFORM SHALL BE FOUNDED ON PRECAST PRESTRESSED CONCRETE PILES HAVING THE FOLLOWING MINIMUM SAFE BEARING/TENSION CAPACITY (TONS/PILE) AND MINIMUM TIP ELEVATION (FT.):

BULKHEAD TYPE "A"

12" SQ. PILES (VERT.):	65 (BEARING); EL. -63.0
12" SQ. PILES (BATT.):	50 (TENSION); EL. -61.0
14" SQ. PILES (BATT.):	120 (BEARING); EL. -66.0

BULKHEAD TYPE "B"

12" SQ. PILES (VERT.):	60 (BEARING); EL. -50.0
14" SQ. PILES (BATT.):	100 (BEARING); EL. -55.0
	50 (TENSION); EL. -55.0

4. DESIGN DATA/CRITERIA FOR PRECAST PRESTRESSED CONCRETE SHEET PILING:

A. SOIL PARAMETERS AS DETERMINED BY NAVAL FACILITIES ENGINEERING COMMAND-ATLANTIC DIVISION:

a. FROM EL.+10.0 TO EL. 0.0: ø = 28°; γ = 100 PCF; C = 0
b. FROM EL. 0.0 TO EL. -12.0: ø = 28°; γ (SUB.) = 45 PCF; C = 0
c. FROM EL.-12.0 TO EL.-27.0: ø = 26°; γ (SUB.) = 40 PCF; C = 0
d. FROM EL.-27.0 TO EL.-47.0: ø = 26°; γ (SUB.) = 45 PCF; C = 200 PSF*
e. BELOW EL.-47.0 : ø = 30°; γ (SUB.) = 60 PCF; C = 0

* COHESION, C, = 200 PSF APPLIES TO ACTIVE AND PASSIVE EARTH PRESSURES IN STRATA d.

B. MAXIMUM BENDING MOMENT, M, (FT.-KIPS/FOOT OF WALL) AND MINIMUM TIP ELEVATION (FT.):

BULKHEAD TYPE "A": M = 60.0; EL. -56.0
BULKHEAD TYPE "B": M = 49.0; EL. -38.0
CLOSURE WINGWALL: M = 49.0; EL. -25.0

CONTRACTOR SHALL SUBMIT DESIGN CALCULATIONS FOR PRECAST PRESTRESSED CONCRETE SHEET PILING TO CONTRACTING OFFICER FOR APPROVAL.

5. CONTRACTOR SHALL FIELD VERIFY ALL DIMENSIONS, ELEVATIONS, ETC. NECESSARY FOR PROPER ALIGNMENT OF THE NEW STRUCTURE TO THE EXISTING STRUCTURE.

6. CRACK CONTROL JOINTS FOR BULKHEAD STEM WALL SHALL BE PROVIDED AT 15'-0" O/C MAX., SEE DETAIL d/S-9/S-9.

7. UNLESS OTHERWISE NOTED, PROVIDE 3/4" CHAMFER ON ALL EXPOSED CONCRETE CORNERS.

8. REINFORCING STEEL MARKED CONTINUOUS (CONT.) SHALL BE LAPPED 36 X BAR DIAMETER AT SPLICES.

9. MINIMUM CONCRETE COVER FOR REINFORCING STEEL SHALL BE AS SHOWN. WHERE COVER IS NOT INDICATED PROVISIONS OF ACI 318-77 ARE APPLICABLE.

10. UNLESS OTHERWISE NOTED ALL REINFORCING HOOKS SHALL BE STANDARD 90° HOOKS.

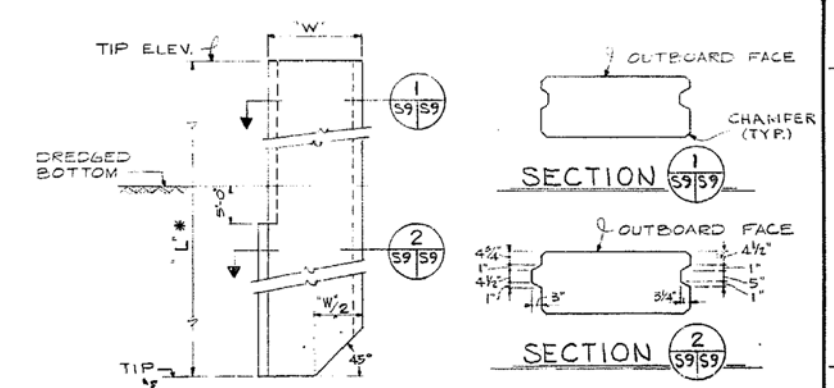

* - LENGTH OF PILE, L, VARIES, FOR LENGTH DETERMINATION SEE APPLICABLE SECTIONS AND NOTES.

PRECAST PRESTRESSED CONC. SHEET PILE DETAIL C S9/S9
NO SCALE

GRAPHIC SCALES
1/8" = 1'-0"
3/8" = 1'-0"

LEGEND
- 12" x 12" P/C P/S CONCRETE PILE (VERT.)
- OR - 14" x 14" P/C P/S CONCRETE PILE (BATTERED)
- 16" x 16" P/C P/S CONCRETE PILE (BATTERED)
- PROPOSED LOCATION FOR TEST PILE. (2 LOCATIONS)

RECORD DRAWING
LETTER DATED 11 APR 1981

S-9

EFD DWG. NO. 178245
JOB ORDER NO. 749F2105
DES. B.R. JENKINS, P.E.
DRWN. BRJ
TR. MCW
CHK. VRS
SR. NGR. F.P. Nicholas P.E.
DES. DIR. J. Wilcox
SATISFACTORY TO DATE
APPROVED DATE 1-8 MAY 1982
FOR EFD FOR COMMANDER DIVISION

DEPARTMENT OF THE NAVY NAVAL FACILITIES ENGINEERING COMMAND
ATLANTIC DIVISION
NAVAL STATION NORFOLK, VA.
NAVAL STATION NORFOLK, VA.
AFDM-10 TEE PIER AND BULKHEAD EXTENSION
BULKHEAD PLANS AND DETAILS
F 80091 178245
NOTED 05-82-2105 N62470-82-2105

REVISIONS			
SYM.	DESCRIPTION	DATE	APPROVED
A	REVISED: AS-BUILT	5/1985	WDK

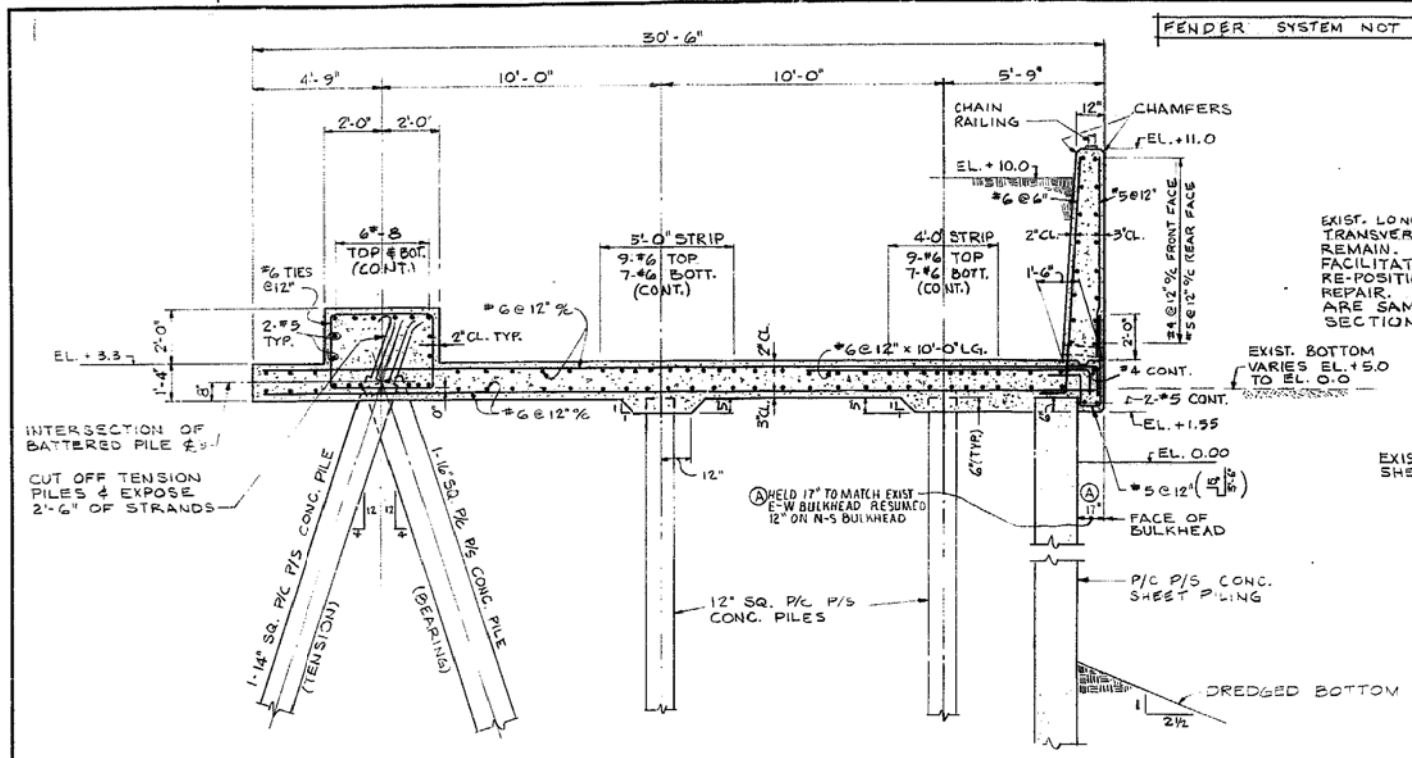

SECTION 1 (S-9/S-10) BULKHEAD TYPE 'A'
SCALE: 3/8" = 1'-0"

FOR WEEP HOLES, SEE DETAIL B/S-10/S-10.

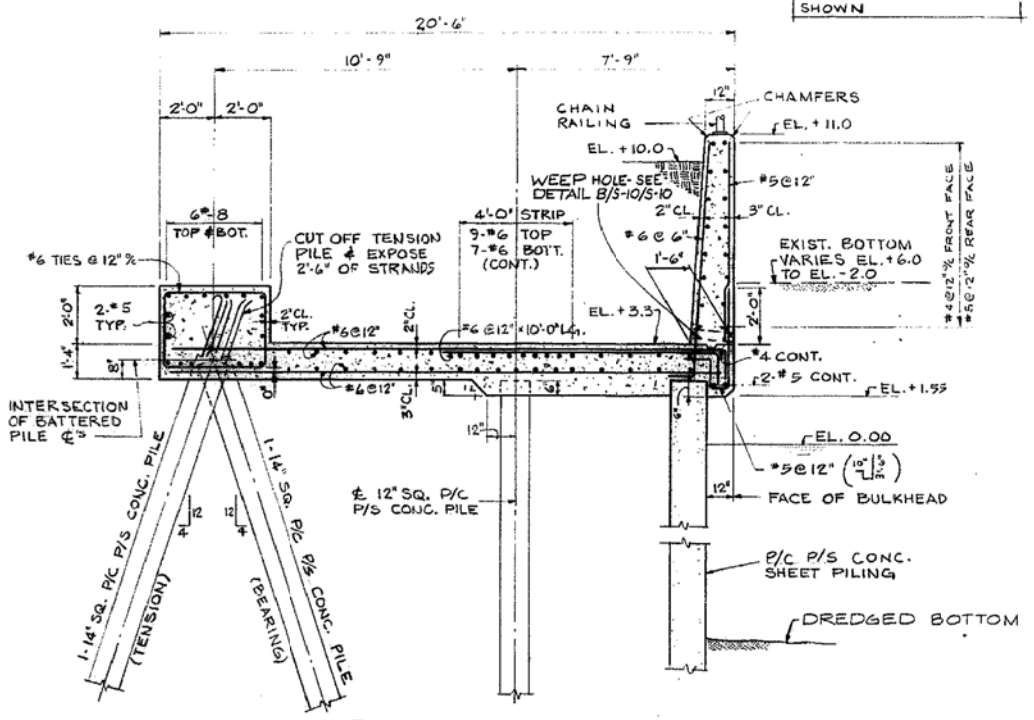

SECTION 2 (S-9/S-10) BULKHEAD TYPE 'B'
SCALE: 3/8" = 1'-0"

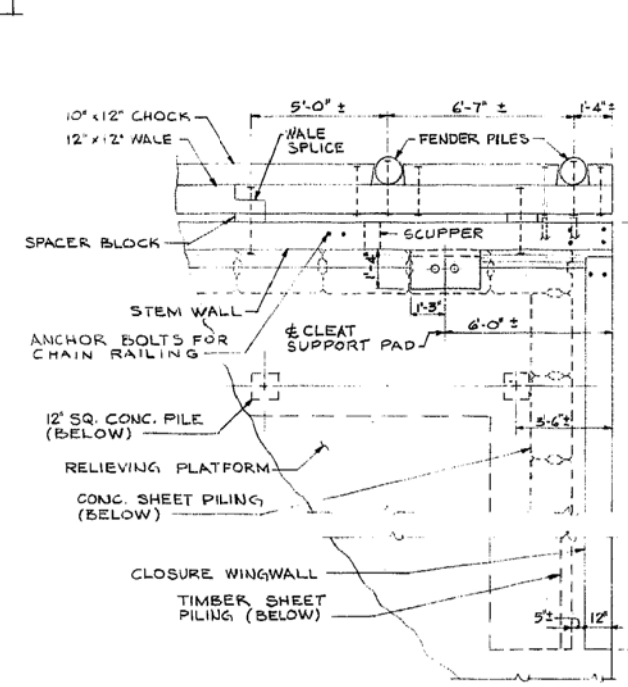

EXISTING CONDITION

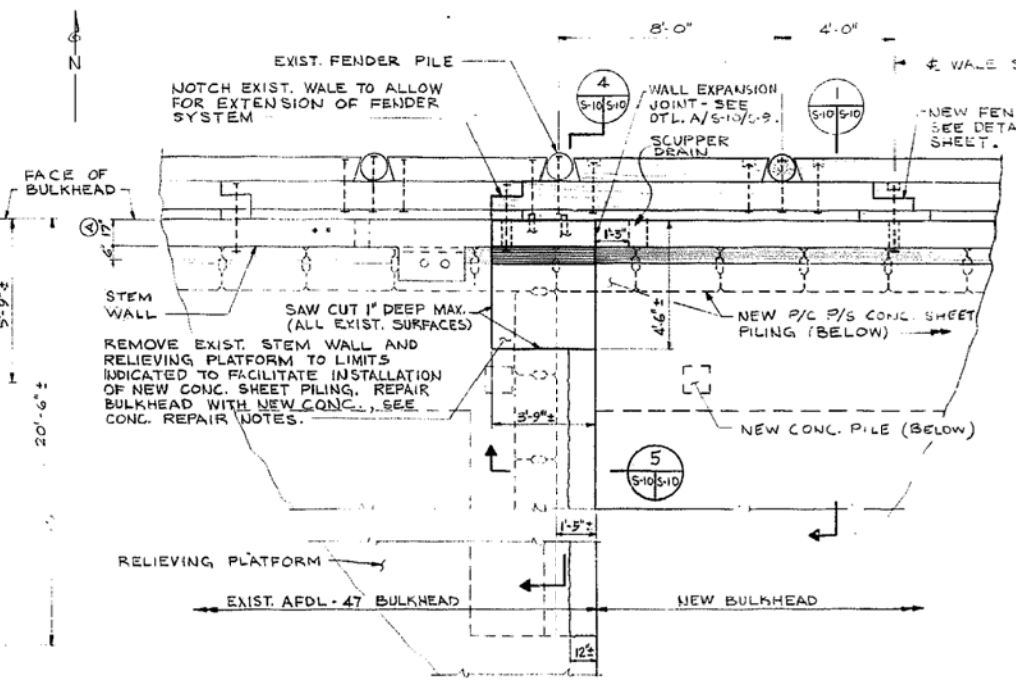

NEW CONDITION

PART PLAN - EAST END OF EXISTING BULKHEAD

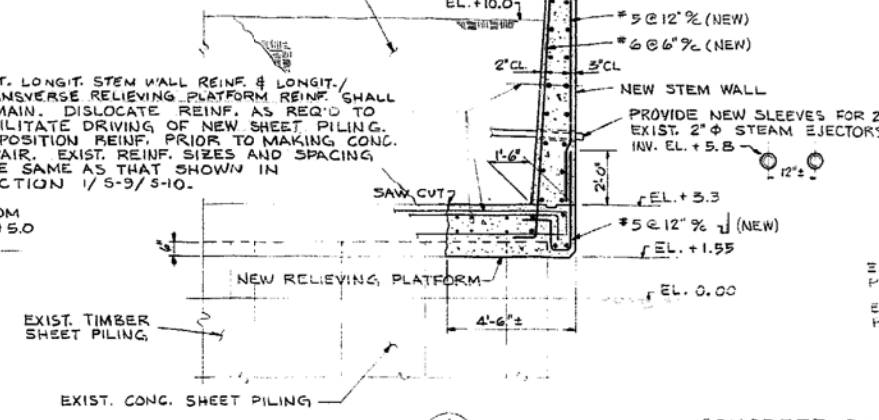

SECTION 4 (S-10/S-10)
SCALE: 3/8" = 1'-0"

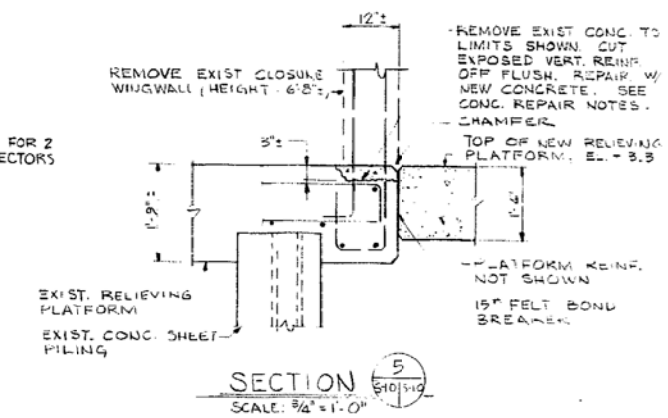

SECTION 5 (S-10/S-10)
SCALE: 3/8" = 1'-0"

CONCRETE REPAIR NOTES:

1-CLEAN BY WIRE BRUSHING ALL AREAS TO BE CONCRETED. FOLLOW BY SCOURING WITH WATER AND COMPRESSED AIR.

2-PRIOR TO PLACING CONCRETE, COAT ALL CONTACT SURFACES WITH A UNIFORM LAYER OF EPOXY BINDER.

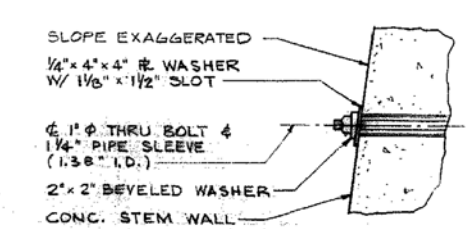

DETAIL A (S-10/S-10)
NO SCALE

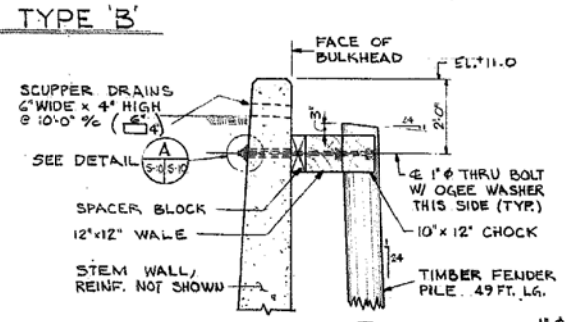

SECTION 3 (S-10/S-10)
SCALE: 1/2" = 1'-0"

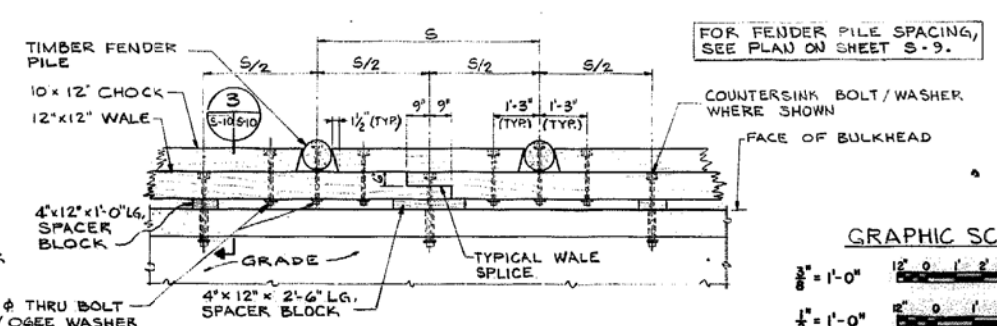

FOR FENDER PILE SPACING, SEE PLAN ON SHEET S-9.

PARTIAL PLAN - TYP. FENDER SYSTEM
SCALE: 3/8" = 1'-0"

GRAPHIC SCALES

3/8" = 1'-0"
1/2" = 1'-0"
3/4" = 1'-0"

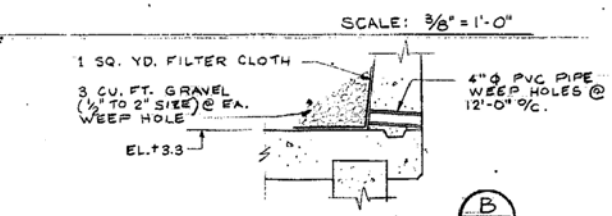

WEEP HOLE DETAIL B (S-10/S-10)
NO SCALE

RECORD DRAWING
LETTER DATED 11 APR 1984

S-10

EFD DWG. NO. 1078246
JOB ORDER NO. 749-2105
DES. B. R. JENKINS, P.E.
DRWN. B R J
TR. M C W
CHK. V R S
RR. MGR. J R Richards P.E.
DES. DIR. J W Hill
SATISFACTORY TO DATE
APPROVED DATE 12 MAY 1982 FOR EFD FOR COMMANDER NAVFAC

DEPARTMENT OF THE NAVY — NAVAL FACILITIES ENGINEERING COMMAND
ATLANTIC DIVISION
NAVAL STATION — NORFOLK, VA.
NAVAL STATION NORFOLK, VA.

AFDM-10 TEE PIER AND BULKHEAD EXTENSION

BULKHEAD PLANS, SECTIONS & DETAILS

F | 80091 | 1078246 | N62470-82-2105 | 05-82-2105 | 70 of 3

REVISIONS			
NO.	DESCRIPTION	DATE	APPROVED
(4)	REVISED: AS-BUILT	8/8/85	MCK

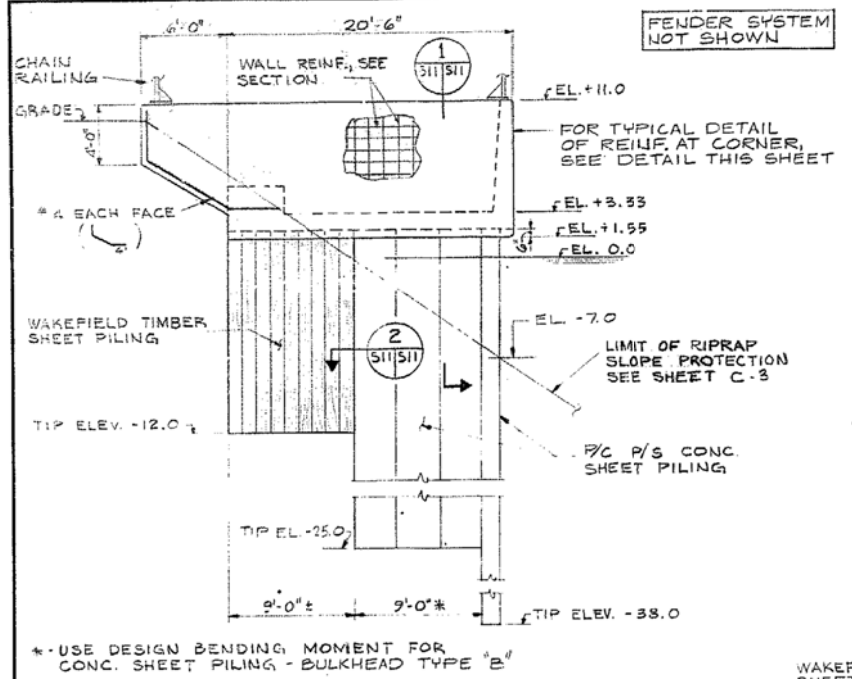

ELEVATION (A/S11/S11) CLOSURE WINGWALL
SCALE: 3/16" = 1'-0"

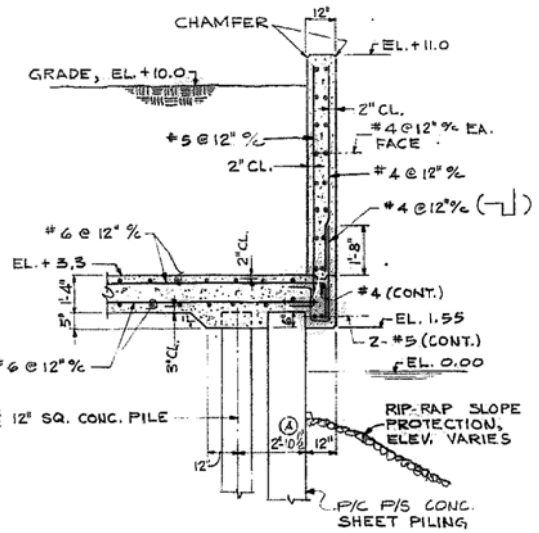

SECTION (1/S11/S11)
SCALE: 3/8" = 1'-0"

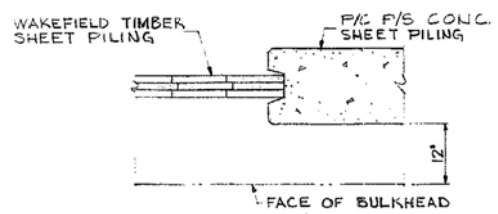

SECTION (2/S11/S11)
SCALE: 3/4" = 1'-0"

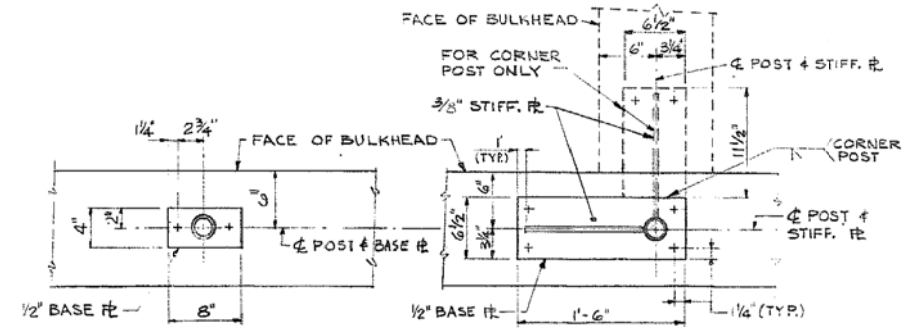

SECTION (3/S11/S11)
SCALE: 1 1/2" = 1'-0"

SECTION (4/S11/S11)
SCALE: 1 1/2" = 1'-0"

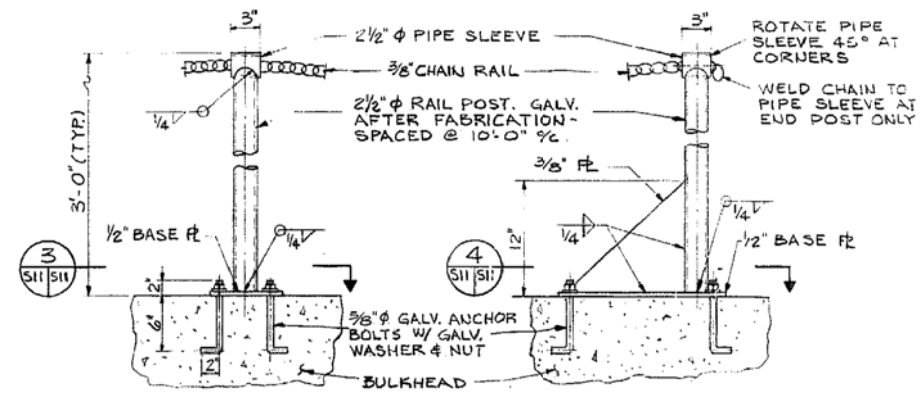

INTERMEDIATE POST | END POST (1 REQUIRED) | CORNER POST (2-REQUIRED)

BULKHEAD CHAIN RAILING DETAILS (B/S9/S11) SCALE: 1 1/2" = 1'-0"

CONCRETE PILE NOTES

1. PILES SHALL HAVE A MIN. PRESTRESS AFTER LOSSES OF 700 PSI.
2. P/S STRANDS/WIRES SHALL CONFORM TO ASTM A416 / ASTM A421, TYPE WA RESTRESS. RELV.
3. DOWELS SHALL CONFORM TO ASTM A615, GRADE 60.
4. CONTRACTOR AT HIS OPTION MAY PROVIDE A STANDARD CIRCULAR PRESTRESSED PATTERN.

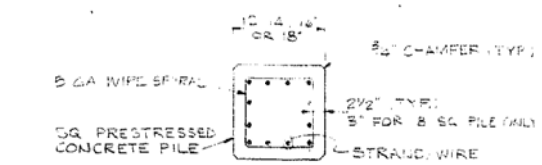

SECTION (5/S11/S11)
NO SCALE

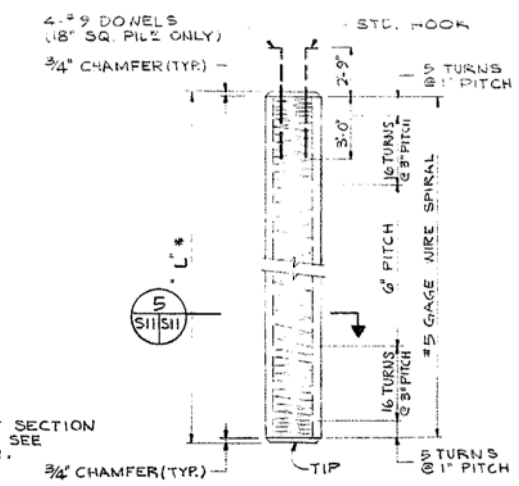

(5/S11/S11)

* LENGTH OF PILES, L, VARIES FOR LENGTH DETERMINATION SEE APPLICABLE SECTIONS AND NOTES.

PRECAST PRESTRESSED CONC. PILE DETAIL (C/S9/S11)
NO SCALE

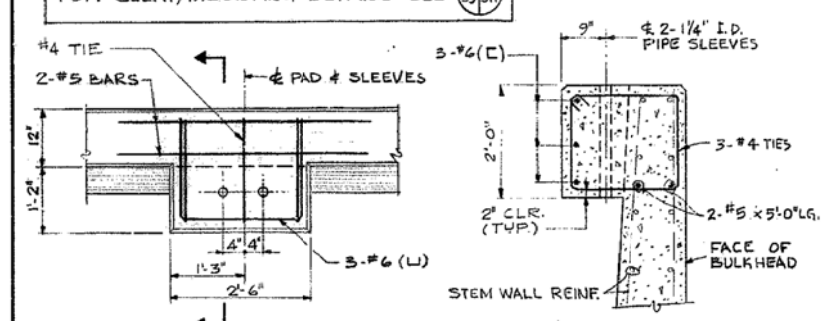

CLEAT SUPPORT PAD DETAIL (D/S9/S11)
SCALE: 3/4" = 1'-0"

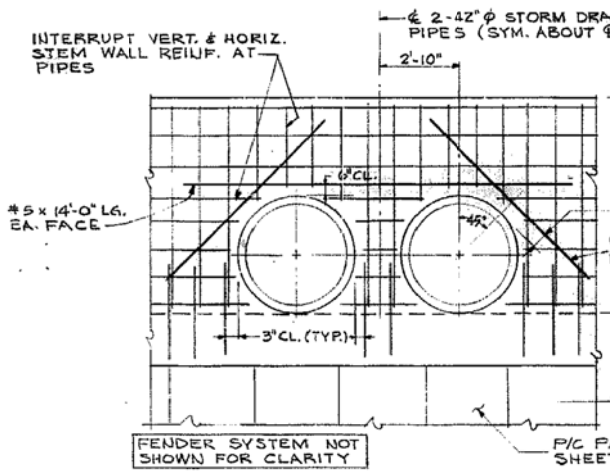

ELEVATION (E/S11/S11)
SCALE: 3/8" = 1'-0"

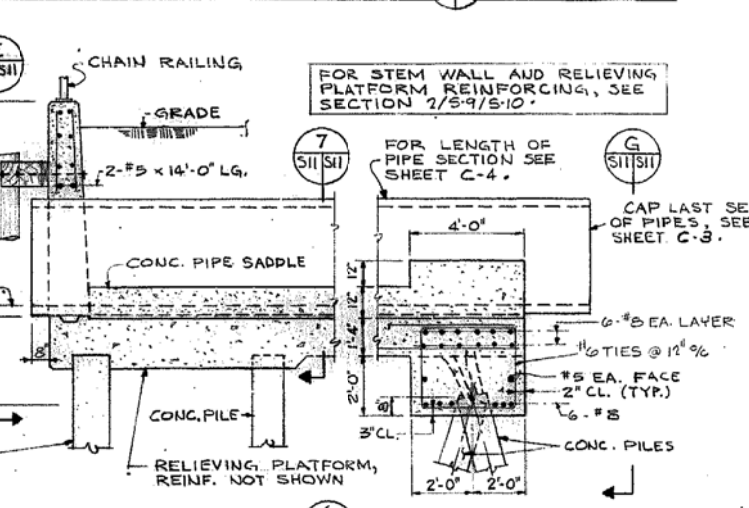

SECTION (6/S9/S11)
SCALE: 3/8" = 1'-0"

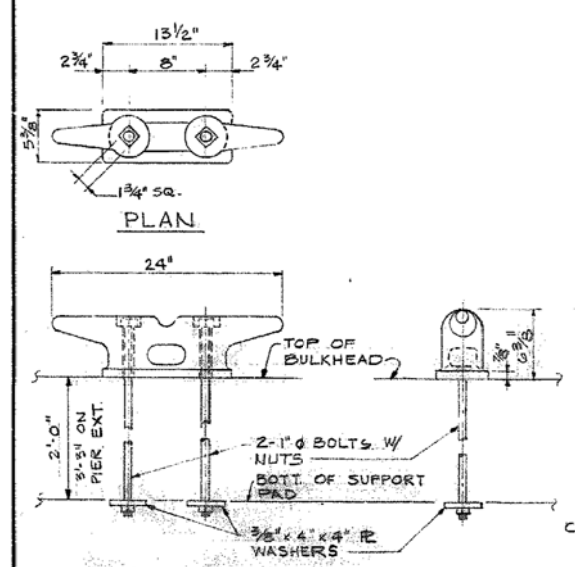

24" CLEAT/MOUNTING DETAILS (F/S9/S11)
NO SCALE

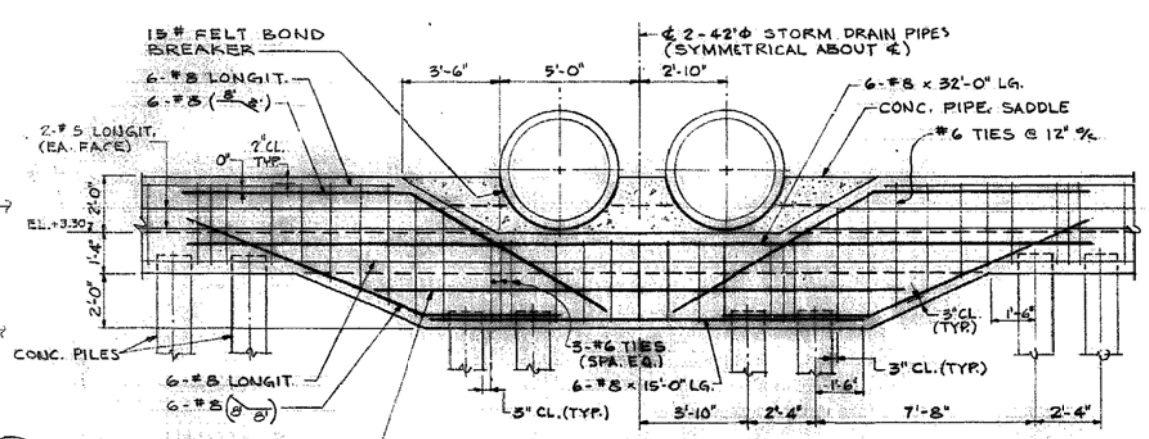

ELEVATION (G/S11/S11)
SCALE: 3/8" = 1'-0"

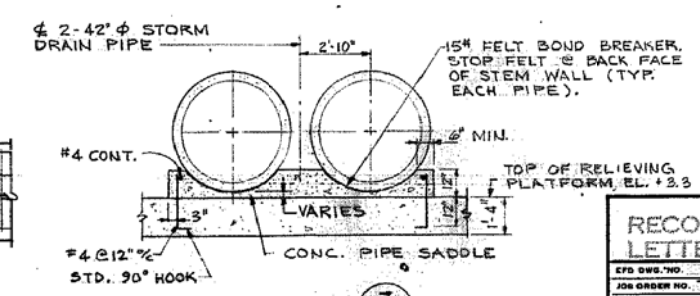

SECTION (7/S11/S11)
SCALE: 3/8" = 1'-0"

GRAPHIC SCALES
3/16" = 1'-0" | 3/8" = 1'-0" | 1/2" = 1'-0" | 3/4" = 1'-0" | 1 1/2" = 1'-0"

RECORD DRAWING
LETTER DATED 11 APR 1984

S-11

CFD DWG. NO.	178247
JOB ORDER NO.	749 F 2105
DES.	B. R. JENKINS, P.E.
DRWN.	BRJ
TR.	MCW
CHK.	VDT
SR. NGR.	T.D. MURPHY, P.E.
DEP. DIR.	
SATISFACTORY TO	DATE
APPROVED	DATE 11 MAY 1982 FOR SFD FOR COMMANDER NAVFAC

DEPARTMENT OF THE NAVY — NAVAL FACILITIES ENGINEERING COMMAND
ATLANTIC DIVISION
NAVAL STATION — NORFOLK, VA.
NAVAL STATION — NORFOLK, VA.

AFDM-10 TEE PIER AND BULKHEAD EXTENSION

BULKHEAD ELEVATIONS, SECTIONS & DETAILS

F	80091	4078247
NOTED	05-82-2105	21 of 31