# PIER 2 REPLACEMENT

## NAVAL STATION NORFOLK, VA

## DRAWING INDEX

| PAGE NO. | SHEET NO. | EFD DWG NO | NAVFAC DWG NO | SHEET TITLE |
|---|---|---|---|---|
| 1 | T–1 | 493891 | 4393891 | TITLE SHEET – DRAWING INDEX |
| 2 | T–2 | 493892 | 4393892 | VICINITY AND LOCATION MAPS – DRAWING INDEX (CONT.) |
| 3 | C–1 | 493893 | 4393893 | NOTES, ABBREVIATIONS AND LEGEND |
| 4 | C–2 | 493894 | 4393894 | NEW PIER 2 LAYOUT PLAN |
| 5 | C–3 | 493895 | 4393895 | KEY PLANS (CIVIL SHEETS) |
| 6 | C–4 | 493896 | 4393896 | DEMOLITION PLAN (1 OF 5) |
| 7 | C–5 | 493897 | 4393897 | DEMOLITION PLAN ( 2 OF 5) |
| 8 | C–6 | 493898 | 4393898 | DEMOLITION PLAN (3 OF 5) |
| 9 | C–7 | 493899 | 4393899 | DEMOLITION PLAN (4 OF 5) |
| 10 | C–8 | 493900 | 4393900 | DEMOLITION PLAN (5 OF 5) |
| 11 | C–9 | 493901 | 4393901 | PIER POINT PARK DEMOLITION |
| 12 | C–10 | 493902 | 4393902 | SITE DEMOLITION PLAN (1 OF 2) |
| 13 | C–11 | 493903 | 4393903 | SITE DEMOLITION PLAN (2 OF 2) |
| 14 | C–12 | 493904 | 4393904 | NEW SITE LAYOUT PLAN (1 OF 2) |
| 15 | C–13 | 493905 | 4393905 | NEW SITE LAYOUT PLAN (2 OF 2) |
| 16 | C–14 | 493906 | 4393906 | NEW SITE GRADING PLAN (1 OF 2) |
| 17 | C–15 | 493907 | 4393907 | NEW SITE GRADING PLAN (2 OF 2) |
| 18 | C–16 | 493908 | 4393908 | NEW SITE UTILITY PLAN (1 OF 2) |
| 19 | C–17 | 493909 | 4393909 | NEW SITE UTILITY PLAN (2 OF 2) |
| 20 | C–18 | 493910 | 4393910 | EXPAND SUBSTATION – DEMOLITION PLAN |
| 21 | C–19 | 493911 | 4393911 | EXPAND SUBSTATION – NEW WORK PLAN |
| 22 | C–20 | 493912 | 4393912 | Z–86 DEMOLITION SITE PLAN |
| 23 | C–21 | 493913 | 4393913 | EXISTING UTILITY STRUCTURE DATA |
| 24 | C–22 | 493914 | 4393914 | UTILITY DETAILS |
| 25 | C–23 | 493915 | 4393915 | PAVEMENT DETAILS |
| 26 | C–24 | 493916 | 4393916 | MISCELLANEOUS DETAILS |
| 27 | C–25 | 493917 | 4393917 | OILY WASTE/WASTE OIL (OWWO) PROFILE |
| 28 | C–26 | 493918 | 4393918 | SANITARY (SAN.) AND POTABLE WATER (PW) PROFILES |
| 29 | C–27 | 493919 | 4393919 | DREDGING PLAN |
| 30 | C–28 | 493920 | 4393920 | DREDGING PLAN |
| 31 | C–29 | 493921 | 4393921 | DREDGING PLAN |
| 32 | C–30 | 493922 | 4393922 | DREDGING PLAN |
| 33 | C–31 | 493923 | 4393923 | DREDGING PLAN |
| 34 | C–32 | 493924 | 4393924 | DREDGING PLAN |
| 35 | C–33 | 493925 | 4393925 | DREDGING DETAILS |
| 36 | CS–1 | 493926 | 4393926 | SIDESCAN SONAR AND MAGNETOMETER SURVEY (1 OF 6) |
| 37 | CS–2 | 493927 | 4393927 | SIDESCAN SONAR AND MAGNETOMETER SURVEY (2 OF 6) |
| 38 | CS–3 | 493928 | 4393928 | SIDESCAN SONAR AND MAGNETOMETER SURVEY (3 OF 6) |
| 39 | CS–4 | 493929 | 4393929 | SIDESCAN SONAR AND MAGNETOMETER SURVEY (4 OF 6) |
| 40 | CS–5 | 493930 | 4393930 | SIDESCAN SONAR AND MAGNETOMETER SURVEY (5 OF 6) |
| 41 | CS–6 | 493931 | 4393931 | SIDESCAN SONAR AND MAGNETOMETER SURVEY (6 OF 6) |
| 42 | DS–1 | 493932 | 4393932 | DEMOLITION PHOTOGRAPH ORIENTATION PLAN |
| 43 | DS–2 | 493933 | 4393933 | DEMOLITION PHOTOGRAPHS 1 – 6 |
| 44 | DS–3 | 493934 | 4393934 | DEMOLITION PHOTOGRAPHS 7 – 12 |
| 45 | DS–4 | 493935 | 4393935 | DEMOLITION PHOTOGRAPHS 13 – 18 |
| 46 | DS–5 | 493936 | 4393936 | BLDG. Z–86 FNDTN. PLAN – DEMO. PHOTOGRAPHS 19 – 21 |
| 47 | DS–6 | 493937 | 4393937 | BLDG. Z–86 FLOOR PLANS AND SECTION |
| 48 | DS–7 | 493938 | 4393938 | BLDG. Z–357 FOUNDATION PLAN |
| 49 | DS–8 | 493939 | 4393939 | BLDG. Z–357 FLOOR AND ROOF PLANS |
| 50 | DS–9 | 493940 | 4393940 | FERRY LANDING DEMOLITION PLAN |
| 51 | DS–10 | 493941 | 4393941 | BREAKWATER DEMOLITION PLAN AND SECTION |
| 52 | DM–1 | 493942 | 4393942 | STEAM LINE DEMOLITION SITE PLAN |
| 53 | ER–1 | 493943 | 4393943 | ASBESTOS NOTES AND DETAIL |
| 54 | ER–2 | 493944 | 4393944 | ASBESTOS ABATEMENT BUILDING Z–86 |
| 55 | ER–3 | 493945 | 4393945 | ASBESTOS ABATEMENT BUILDING Z–86 |
| 56 | ER–4 | 493946 | 4393946 | ASBESTOS ABATEMENT BUILDING Z–86 |
| 57 | ER–5 | 493947 | 4393947 | ASBESTOS REMOVAL BUILDING Z–86 |
| 58 | ER–6 | 493948 | 4393948 | ASBESTOS ABATEMENT BUILDING Z–357 |
| 59 | ER–7 | 493949 | 4393949 | ASBESTOS ABATEMENT BUILDING Z–357 |
| 60 | ER–8 | 493950 | 4393950 | ASBESTOS ABATEMENT BUILDING Z–357 |
| 61 | ER–9 | 493951 | 4393951 | PCB LIGHT BALLAST REMOVAL BLDG. Z–86 |
| 62 | ER–10 | 493952 | 4393952 | PCB LIGHT BALLAST REMOVAL BLDG. Z–86 |
| 63 | ER–11 | 493953 | 4393953 | PCB LIGHT BALLAST REMOVAL BLDG. Z–357 |
| 64 | ER–12 | 493954 | 4393954 | PCB LIGHT BALLAST REMOVAL BLDG. Z–357 |
| 65 | ER–13 | 493955 | 4393955 | RCRA METALS CONTAINING PAINT REMOVAL BLDG. Z–86 |
| 66 | ER–14 | 493956 | 4393956 | RCRA METALS CONTAINING PAINT REMOVAL BLDG. Z–86 |
| 67 | ER–15 | 493957 | 4393957 | RCRA METALS CONTAINING PAINT REMOVAL BLDG. Z–357 |
| 68 | ER–16 | 493958 | 4393958 | RCRA METALS CONTAINING PAINT REMOVAL BLDG. Z–357 |
| 69 | B–1 | 493959 | 4393959 | BORINGS 1 AND 2 |
| 70 | B–2 | 493960 | 4393960 | BORINGS 3 AND 4 |
| 71 | B–3 | 493961 | 4393961 | BORINGS 5 AND 6 |
| 72 | B–4 | 493962 | 4393962 | BORINGS 7 AND 8 |
| 73 | B–5 | 493963 | 4393963 | BORINGS 9 AND 10 |
| 74 | B–6 | 493964 | 4393964 | BORINGS 11 AND 12 |
| 75 | B–7 | 493965 | 4393965 | BORINGS 13 AND 14 |
| 76 | B–8 | 493966 | 4393966 | BORINGS 15, 17, 17 AND 18 |
| 77 | B–9 | 493967 | 4393967 | BORINGS 19, 20, 21 AND 22 |
| 78 | B–10 | 493968 | 4393968 | BORINGS 23, 24 AND 25 |
| 79 | B–11 | 493969 | 4393969 | SOIL BORINGS NOTES |
| 80 | S–1 | 493970 | 4393970 | GENERAL NOTES / PLAN LEGEND |
| 81 | S–2 | 493971 | 4393971 | PARTIAL PLAN – PIER 2 (INSHORE END – BENT 20) |
| 82 | S–3 | 493972 | 4393972 | PARTIAL PLAN – PIER 2 (BENTS 21 – 40) |
| 83 | S–4 | 493973 | 4393973 | PARTIAL PLAN – PIER 2 (BENTS 41 – 60) |
| 84 | S–5 | 493974 | 4393974 | PARTIAL PLAN – PIER 2 (BENT 61 – OFFSHORE END) |
| 85 | S–6 | 493975 | 4393975 | TYPICAL LATERAL PIER SECTION |
| 86 | S–7 | 493976 | 4393976 | LATERAL PIER SECTION AT BOLLARD PLATFORMS |
| 87 | S–8 | 493977 | 4393977 | LATERAL PIER SECTION THROUGH INSHORE END |
| 88 | S–9 | 493978 | 4393978 | DETAIL – LOWER DECK EDGE |
| 89 | S–10 | 493979 | 4393979 | DETAIL – LOWER DECK EDGE AT SHIP POWER STATION |
| 90 | S–11 | 493980 | 4393980 | DETAIL – LOWER DECK EDGE AT SHIP POWER STATION |
| 91 | S–12 | 493981 | 4393981 | DETAIL – LOWER DECK EDGE AT INSHORE END |
| 92 | S–13 | 493982 | 4393982 | LONGITUDINAL SECTION AT VEHICLE RAMP |
| 93 | S–14 | 493983 | 4393983 | LONGITUDINAL SECTION AT LOWER DECK ENTRANCE |
| 94 | S–15 | 493984 | 4393984 | DETAILS – OFFSHORE END AND EXPANSION JOINTS |
| 95 | S–16 | 493985 | 4393985 | OFFSHORE STAIRWELL AND SPLICE BOX ENCLOSURE DETAILS |
| 96 | S–17 | 493986 | 4393986 | DETAIL – ELEVATED BOLLARD PLATFORMS |
| 97 | SA–1 | 493987 | 4393987 | PRECAST, PRESTRESSED CONCRETE PILE DETAILS |
| 98 | SA–2 | 493988 | 4393988 | PRECAST CONCRETE EDGE CAP DETAILS |
| 99 | SA–3 | 493989 | 4393989 | PRECAST CONCRETE PILE CAP LAYOUT PLAN |
| 100 | SA–4 | 493990 | 4393990 | PRECAST CONCRETE PILE CAP DETAILS AND SECTIONS |
| 101 | SA–5 | 493991 | 4393991 | PRECAST CONCRETE PILE CAP HAUNCH DETAILS |
| 102 | SA–6 | 493992 | 4393992 | PILE CAP SHEAR KEY DETAILS |
| 103 | SA–7 | 493993 | 4393993 | PRECAST CONCRETE BEAM DETAILS |
| 104 | SA–8 | 493994 | 4393994 | PRECAST CONCRETE BEAM DETAILS |
| 105 | SA–9 | 493995 | 4393995 | PRECAST CONCRETE BEAM AND EDGE PANEL DETAILS |
| 106 | SA–10 | 493996 | 4393996 | LOWER DECK PRECAST CONCRETE SLAB LAYOUT PLAN |
| 107 | SA–11 | 493997 | 4393997 | PRECAST CONCRETE SLAB DETAILS |
| 108 | SA–12 | 493998 | 4393998 | PRECAST CONCRETE SLAB OPENING DETAILS |
| 109 | SA–13 | 493999 | 4393999 | PRECAST CONCRETE SLAB OPENING – LIFT STATION DETAILS |
| 110 | SB–1 | 494000 | 4394000 | EDGE CAP AND PILE CAP INSTALLATION DETAILS |
| 111 | SB–2 | 494001 | 4394001 | EDGE BEAM INSTALLATION DETAILS |
| 112 | SB–3 | 494002 | 4394002 | PIER END CLOSURE DETAILS |
| 113 | SB–4 | 494003 | 4394003 | LOWER DECK CLOSURE DETAILS |
| 114 | SB–5 | 494004 | 4394004 | LOWER DECK SLAB INSTALLATION DETAILS |
| 115 | SB–6 | 494005 | 4394005 | BATTER PILE CAP AND SHEAR KEY DETAILS |
| 116 | SB–7 | 494006 | 4394006 | LOWER DECK UTILITY CURB DETAILS |
| 117 | SB–8 | 494007 | 4394007 | PIER–END CURB–MISC. LOWER DECK CONCRETE DETAILS |
| 118 | SB–9 | 494008 | 4394008 | ELECTRICAL EQUIPMENT SUPPORT DETAILS |
| 119 | SB–10 | 494009 | 4394009 | LIFT STATION INSTALLATION DETAILS |
| 120 | SB–11 | 494010 | 4394010 | EDGE PANEL INSTALLATION – PIPE HANGER DETAILS |
| 121 | SC–1 | 494011 | 4394011 | LOWER DECK PLANS |
| 122 | SC–2 | 494012 | 4394012 | UPPER DECK PLANS |
| 123 | SC–3 | 494013 | 4394013 | COLUMNS |
| 124 | SC–4 | 494014 | 4394014 | COLUMNS |
| 125 | SC–5 | 494015 | 4394015 | LOWER DECK ENCLOSURES |
| 126 | SC–6 | 494016 | 4394016 | ENCLOSURE ELEVATIONS AND DETAILS |
| 127 | SC–7 | 494017 | 4394017 | BOLLARD PLATFORMS |
| 128 | SC–8 | 494018 | 4394018 | UPPER DECK BEAMS |
| 129 | SC–9 | 494019 | 4394019 | UPPER DECK BEAMS |
| 130 | SC–10 | 494020 | 4394020 | SECTIONS |
| 131 | SC–11 | 494021 | 4394021 | SECTIONS |
| 132 | SC–12 | 494022 | 4394022 | SECTIONS AND PRECAST SLAB DETAILS |
| 133 | SC–13 | 494023 | 4394023 | TYPICAL DETAILS |
| 134 | SC–14 | 494024 | 4394024 | DETAILS |
| 135 | SD–1 | 494025 | 4394025 | UPPER DECK BOLLARD AND BOLLARD PAD DETAILS |
| 136 | SD–2 | 494026 | 4394026 | LOWER DECK / RELIEVING PLATFORM FITTING DETAILS |
| 137 | SD–3 | 494027 | 4394027 | RAILING DETAILS |
| 138 | SD–4 | 494028 | 4394028 | CORNER, END, AND RAIL FENDER MOUNTING DETAILS |
| 139 | SD–5 | 494029 | 4394029 | CORNER AND END FENDER FABRICATION DETAILS |
| 140 | SD–6 | 494030 | 4394030 | RAIL FENDER FABRICATION DETAILS |
| 141 | SD–7 | 494031 | 4394031 | FENDER SYSTEM DETAILS |
| 142 | SD–8 | 494032 | 4394032 | LADDER AND FOAM–FILLED FENDER DETAILS |
| 143 | SD–9 | 494033 | 4394033 | PIPE SUPPORT DETAILS |
| 144 | SD–10 | 494034 | 4394034 | PIPE SUPPORT DETAILS |
| 145 | SD–11 | 494035 | 4394035 | VEHICLE RAMP GATE DETAILS |
| 146 | SD–12 | 494036 | 4394036 | CHAIN LINK FENCE PLANS AND DETAILS |
| 147 | SD–13 | 494037 | 4394037 | SUBSTATION DOLLY ASSEMBLY DETAILS |
| 148 | SE–1 | 494038 | 4394038 | RELIEVING PLATFORM – PARTIAL PLAN |
| 149 | SE–2 | 494039 | 4394039 | RELIEVING PLATFORM – PARTIAL PLAN |
| 150 | SE–3 | 494040 | 4394040 | RELIEVING PLATFORM – PARTIAL PLAN |
| 151 | SE–4 | 494041 | 4394041 | RELIEVING PLATFORM – SECTIONS |
| 152 | SE–5 | 494042 | 4394042 | RELIEVING PLATFORM – DETAILS |
| 153 | SE–6 | 494043 | 4394043 | RELIEVING PLATFORM – DETAILS |
| 154 | SE–7 | 494044 | 4394044 | RELIEVING PLATFORM – SECTIONS |
| 155 | SE–8 | 494045 | 4394045 | RELIEVING PLATFORM – SECTIONS |
| 156 | SE–9 | 494046 | 4394046 | RELIEVING PLATFORM – CORNER DETAILS |

REVISIONS

| SYM. | DESCRIPTION | DATE | APPROVED |
|---|---|---|---|

DESIGNED & ENGINEERED BY: LANTDIV NAVAL FACILITIES ENGINEERING COMMAND

SEAL

APPROVED FOR NFEC 1005L 14 JAN 99 ACTIVITY – SATISFACTORY TO

DATE

APPROVED FOR EFD FOR COMMANDER NAVFAC 1/25/99

DATE

| A/E | EFD |
|---|---|
| DESIGN | HDK |
| DRAWN | HDK |
| REVIEW | BJD |
| QC | AP |
| CHIEF ARCH./ ENGR. | |
| PROJECT MANAGER | DWB |
| FIRE PROTECTION | DWR |
| BRANCH MANAGER | |
| DESIGN DIRECTOR | |

DEPARTMENT OF THE NAVY NAVAL STATION NAVAL FACILITIES ENGINEERING COMMAND ATLANTIC DIVISION NORFOLK, VIRGINIA

NAVAL STATION NORFOLK, VA

PIER 2 REPLACEMENT

TITLE SHEET – DRAWING INDEX

CODE ID. NO. 80091 SIZE D

SCALE: NONE

EFD NO. 493891

STA. PROJ. NO. P–355

SPEC. NO. 05–97–7041

CONSTR. CONTR. NO. N62470–97–B–7041

NAVFAC DRAWING NO. 4393891

SHEET 1 OF 240

T–1

FILENAME: 7041T001.DWG, PLOT SCALE: 1=1, SAVED ON 12/22/98 AT 16:24, XREFS: NONE

DRAWFORM REVISION 27 JULY 98

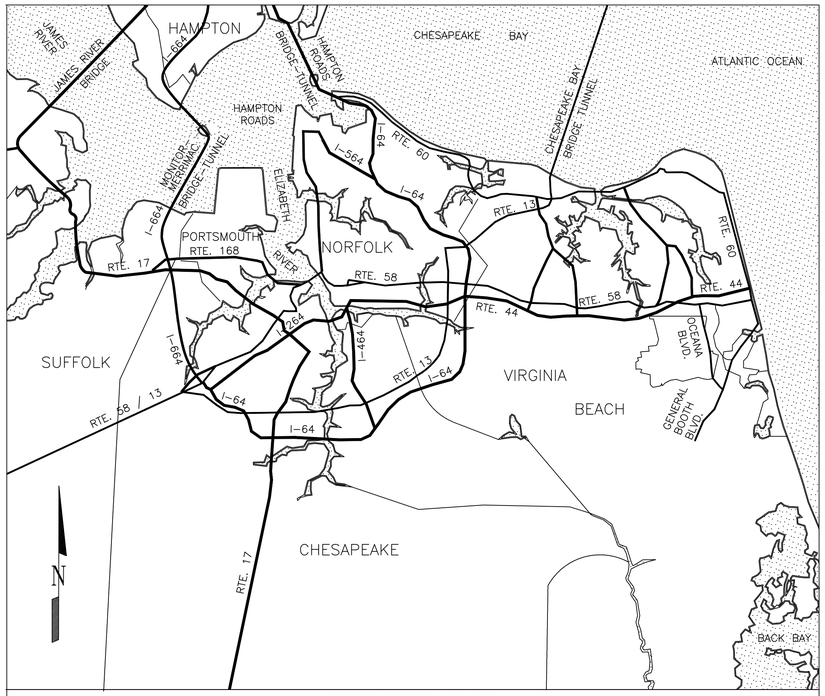


VICINITY MAP

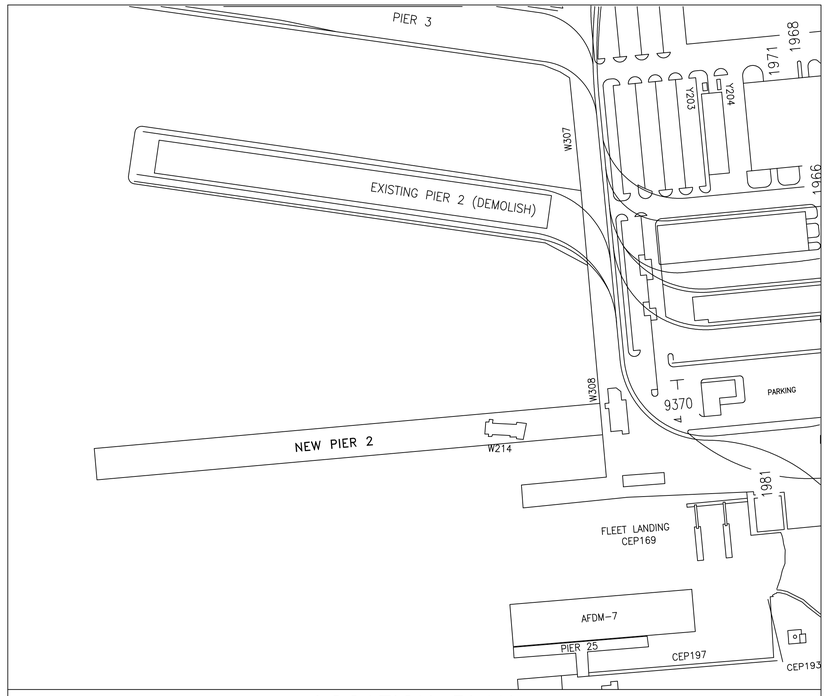


LOCATION PLAN

# DRAWING INDEX (CONTINUED))

| PAGE NO. | SHEET NO. | EFD DWG NO | NAVFAC DWG NO | SHEET TITLE |
|---|---|---|---|---|
| 157 | SE-10 | 494047 | 4394047 | GUARD SHACK DETAILS |
| 158 | SE-11 | 494048 | 4394048 | GUARD SHACK DETAILS |
| 159 | SF-1 | 494049 | 4394049 | LHD MOORING ARRANGEMENTS |
| 160 | SF-2 | 494050 | 4394050 | LHA MOORING ARRANGEMENTS |
| 161 | SF-3 | 494051 | 4394051 | LPD / LSD MOORING ARRANGEMENTS |
| 162 | SF-4 | 494052 | 4394052 | AOE-1 MOORING ARRANGEMENTS |
| 163 | SF-5 | 494053 | 4394053 | AOE-6 MOORING ARRANGEMENTS |
| 164 | SF-6 | 494054 | 4394054 | AO-177 MOORING ARRANGEMENTS |
| 165 | SF-7 | 494055 | 4394055 | AO-187 MOORING ARRANGEMENTS |
| 166 | SF-8 | 494056 | 4394056 | SURFACE COMBATANT MOORING ARRANGEMENTS |
| 167 | MU-1 | 494057 | 4394057 | STEAM SITE PLAN |
| 168 | MU-2 | 494058 | 4394058 | POL PLAN - SITE 1 |
| 169 | MU-3 | 494059 | 4394059 | POL PLAN - SITE 2 |
| 170 | MU-4 | 494060 | 4394060 | STEAM LINE PROFILE & POL SITE 2 PROFILE |
| 171 | MU-5 | 494061 | 4394061 | SITE PLAN DETAILS - STEAM & POL |
| 172 | M-1 | 494062 | 4394062 | PIER 2 PLAN (BENTS 1-40), STM & PW SYSTEMS |
| 173 | M-2 | 494063 | 4394063 | PIER 2 PLAN (BENTS 40-80), STM & PW SYSTEMS |
| 174 | M-3 | 494064 | 4394064 | PIER 2 PLAN (BENTS 1-40), CHT & OW SYSTEMS |
| 175 | M-4 | 494065 | 4394065 | PIER 2 PLAN (BENTS 40-80), CHT & OW SYSTEMS |
| 176 | M-5 | 494066 | 4394066 | STEAM PRESSURE REDUCING STATION PLAN |
| 177 | M-6 | 494067 | 4394067 | STM./PW SERVICE POINT PLAN |
| 178 | M-7 | 494068 | 4394068 | DFM/JP5 SERVICE POINT PLAN |
| 179 | M-8 | 494069 | 4394069 | WATER, SANITARY, & OWWO SERVICE TO NEW PIER 2 |
| 180 | M-9 | 494070 | 4394070 | OW / CHT SERVICE POINT PLAN |
| 181 | M-10 | 494071 | 4394071 | CHT/OW PUMP STATION DETAILS & PUMP DATA |
| 182 | M-11 | 494072 | 4394072 | SECTIONS |
| 183 | M-12 | 494073 | 4394073 | DETAILS |
| 184 | EU-1 | 494074 | 4394074 | LEGEND |
| 185 | EU-2 | 494075 | 4394075 | PARTIAL 34.5KV SYSTEM ONE-LINE DIAGRAM |
| 186 | EU-3 | 494076 | 4394076 | PIER 2 34.5KV ONE-LINE & GROUNDING DIAGRAM |
| 187 | EU-4 | 494077 | 4394077 | CABLE AND CABLE WELL SCHEDULES |
| 188 | EU-5 | 494078 | 4394078 | SITE PLAN 1 |
| 189 | EU-6 | 494079 | 4394079 | SITE PLAN 2 |
| 190 | EU-7 | 494080 | 4394080 | SITE PLAN 3 |
| 191 | EU-8 | 494081 | 4394081 | SITE PLAN 4 |
| 192 | EU-9 | 494082 | 4394082 | SITE PLAN 5 |
| 193 | EU-10 | 494083 | 4394083 | NW SWITCHING STATION SITE PLAN |
| 194 | EU-11 | 494084 | 4394084 | NW SWITCHING BUS PLAN |
| 195 | EU-12 | 494085 | 4394085 | NW SWITCHING STATION ONE-LINE DIAGRAM |
| 196 | EU-13 | 494086 | 4394086 | NW SWITCHING STATION CONTROL BUILDING PLAN |
| 197 | EU-14 | 494087 | 4394087 | TYPICAL NW BREAKER CONTROL DIAGRAM |
| 198 | EU-15 | 494088 | 4394088 | NW SWITCHING STATION ELEVATIONS |
| 199 | EU-16 | 494089 | 4394089 | NW SWITCHING STATION FOUNDATION PLANS AND DETAILS |
| 200 | EU-17 | 494090 | 4394090 | BLDG. Z-86 AND Z-357 DEMOLITION PLANS |
| 201 | EU-18 | 494091 | 4394091 | POWER MANHOLE EXPLODED VIEWS |
| 202 | EU-19 | 494092 | 4394092 | COMMUNICATION MANHOLE EXPLODED VIEWS |
| 203 | EU-20 | 494093 | 4394093 | MANHOLE DETAILS |
| 204 | EU-21 | 494094 | 4394094 | MISCELLANEOUS SITE WORK DETAILS |
| 205 | E-1 | 494095 | 4394095 | PIER CONDUIT PLAN - BENT 1 TO 20 |
| 206 | E-2 | 494096 | 4394096 | PIER CONDUIT PLAN - BENT 21 TO 40 |
| 207 | E-3 | 494097 | 4394097 | PIER CONDUIT PLAN - BENT 41 TO 60 |
| 208 | E-4 | 494098 | 4394098 | PIER CONDUIT PLAN - BENT 61 TO 80 |
| 209 | E-5 | 494099 | 4394099 | SHORE POWER SUBSTATION AREA - ENLARGED PLANS |
| 210 | E-6 | 494100 | 4394100 | 480V SHORE POWER SYSTEM CONNECTIONS - EAST STATIONS |
| 211 | E-7 | 494101 | 4394101 | 480V SHORE POWER SYSTEM CONNECTIONS - WEST STATIONS |
| 212 | E-8 | 494102 | 4394102 | SECONDARY UNIT SUBSTATION ONE-LINE DIAGRAM |
| 213 | E-9 | 494103 | 4394103 | SECONDARY UNIT SUBSTATION PLAN & ELEVATION |
| 214 | E-10 | 494104 | 4394104 | SIMPLIFIED AC & DC SUBSTATION BREAKER CONTROL DIAGRAM |
| 215 | E-11 | 494105 | 4394105 | SHORE POWER STATION DETAILS |
| 216 | E-12 | 494106 | 4394106 | PIER INDUSTRAIL POWER ONE-LINE DIAGRAM |
| 217 | E-13 | 494107 | 4394107 | PIER POWER AND LIGHTING PLAN - BENT 1 TO 10 |
| 218 | E-14 | 494108 | 4394108 | PIER POWER AND LIGHTING PLAN - BENT 10 TO 20 |
| 219 | E-15 | 494109 | 4394109 | PIER POWER AND LIGHTING PLAN - BENT 20 TO 30 |
| 220 | E-16 | 494110 | 4394110 | PIER POWER AND LIGHTING PLAN - BENT 30 TO 40 |
| 221 | E-17 | 494111 | 4394111 | PIER POWER AND LIGHTING PLAN - BENT 40 TO 50 |
| 222 | E-18 | 494112 | 4394112 | PIER POWER AND LIGHTING PLAN - BENT 50 TO 60 |
| 223 | E-19 | 494113 | 4394113 | PIER POWER AND LIGHTING PLAN - BENT 60 TO 70 |
| 224 | E-20 | 494114 | 4394114 | PIER POWER AND LIGHTING PLAN - BNET 70 TO 80 |
| 225 | E-21 | 494115 | 4394115 | CABLE TRAY PLANS |
| 226 | E-22 | 494116 | 4394116 | CABLE ROOM PLANS |
| 227 | E-23 | 494117 | 4394117 | EQUIPMENT ROOM PLANS AND ELEVATIONS |
| 228 | E-24 | 494118 | 4394118 | PUMP STATION PLANS & DETAILS |
| 229 | E-25 | 494119 | 4394119 | PUMP STATION CONTROL SYSTEM DIAGRAMS |
| 230 | E-26 | 494120 | 4394120 | PIER CONDUIT DETAILS |
| 231 | E-27 | 494121 | 4394121 | PIER PANELBOARD SCHEDULES |
| 232 | E-28 | 494122 | 4394122 | PIER LIGHTING CONTACTOR PANELS |
| 233 | E-29 | 494123 | 4394123 | LIGHTING FIXTURE SCHEDULE AND LIGHTING DETAILS |
| 234 | E-30 | 494124 | 4394124 | HIGH MAST LIGHTING & FIRE ALARM BOX DETAILS |
| 235 | E-31 | 494125 | 4394125 | TOP DECK CONDUIT SECTIONS |
| 236 | E-32 | 494126 | 4394126 | BOTTOM DECK CONDUIT SECTIONS |
| 237 | E-33 | 494127 | 4394127 | CONDUIT SUPPORT AND GROUNDING DETAILS |
| 238 | E-34 | 494128 | 4394128 | FIRE ALARM, COMMUNICATION AND TELEPHONE DIAGRAMS |
| 239 | E-35 | 494129 | 4394129 | CATHODIC PROTECTION SYSTEM DETAILS AND RISER DIAGRAMS |
| 240 | E-36 | 494130 | 4394130 | CATHODIC PROTECTION SYSTEM DETAILS |

REVISIONS

| SYM. | DESCRIPTION | DATE | APPROVED |
|---|---|---|---|

DESIGNED & ENGINEERED BY: LANTDIV NAVAL FACILITIES ENGINEERING COMMAND

SEAL

APPROVED

ACTIVITY - SATISFACTORY TO

DATE

APPROVED
FOR EFD FOR COMMANDER NAVFAC
1/25/99

DATE

| A/E | EFD |
|---|---|
| DESIGN | HDK |
| DRAWN | HDK |
| REVIEW | BJD |
| QC | |
| CHIEF ARCH./ ENGR. | |
| PROJECT MANAGER | DWB |
| FIRE PROTECTION | DWR |
| BRANCH MANAGER | |
| DESIGN DIRECTOR | |

DEPARTMENT OF THE NAVY
NAVAL STATION
ATLANTIC DIVISION
NAVAL FACILITIES ENGINEERING COMMAND
NORFOLK, VIRGINIA

NAVAL STATION
NORFOLK, VA.

PIER 2 REPLACEMENT

VICINITY AND LOCATION MAPS - DRAWING INDEX (CONT.)

| | |
|---|---|
| CODE ID. NO. 80091 | SIZE D |
| SCALE: | NONE |
| EFD NO. | 493892 |
| STA. PROJ. NO. | P-355 |
| SPEC. NO. | 05-97-7041 |
| CONSTR. CONTR. NO. | N62470-97-7041 |
| NAVFAC DRAWING NO. | 4393892 |
| SHEET | 2 OF 240 |

T-2

DRAWFORM REVISION 27 JULY 98

FILENAME: 7041T002.DWG, PLOT SCALE: 1=1, SAVED ON 12/22/98 AT 16:27, XREFS: NONE

# ABBREVIATIONS

| | |
|---|---|
| A, AMP | AMPERE |
| AB | ANCHOR BOLT |
| AC | ASPHALTIC CONCRETE |
| ACH | AIR CHANGES PER HOUR |
| ADJ | ADJUSTABLE |
| AFF | ABOVE FINISHED FLOOR |
| AFFF | AQEOUS FILM FORMING FOAM |
| AL, ALUM | ALUMINUM |
| ALT | ALTERNATE |
| AP | ACCESS PANEL |
| APPROX | APPROXIMATE |
| ARCH | ARCHITECTURAL |
| ASPH | ASPHALT |
| B | BOTTOM |
| BF | BLIND FLANGE |
| BFV | BUTTERFLY VALVE |
| BFP | BACKFLOW PREVENTER |
| BIT | BITUMINOUS |
| BHP | BRAKE HORSEPOWER |
| ℄ | BASELINE |
| BLDG | BUILDING |
| BLK | BLOCK |
| BM | BEAM |
| BOV | BLOW OFF VALVE |
| BWL | BROKEN WHITE LINE |
| C | CENTIGRADE |
| ℄ | CENTERLINE |
| CAP | CAPACITY |
| CB | CATCH BASIN |
| CC | CENTER TO CENTER |
| CEM | CEMENT |
| CHT | COLLECT, HOLD, TRANSFER = SANITARY |
| CI | CAST IRON, CRANEY ISLAND |
| CIP | CAST IRON PIPE |
| CL | CLEAR |
| CMU | CONCRETE MASONRY UNIT |
| CND | CONDUIT |
| CO | CLEANOUT |
| CONC | CONCRETE |
| COND | CONDUCTOR |
| CONN | CONNECTION |
| CONST | CONSTRUCTION |
| CONT | CONTINUOUS, CONTINUATION |
| CORR | CORRUGATED |
| CP | NONREINFORCED CONCRETE PIPE |
| CT | COLLECTION/TRANSFER |
| CUH | CABINET UNIT HEATER |
| CV | CHECK VALVE |
| D | DRAIN |
| DB | DIRECT BURIAL |
| DFM | DIESEL FUEL MARINE |
| DH | DRILL HOLE |
| DI | DUCTILE IRON, DROP INLET |
| DIP | DUCTILE IRON PIPE |
| DIA | DIAMETER |
| DIM | DIMENSION |
| DL | DEAD LOAD |
| DMPR | DAMPER |
| DN | DOWN |
| DS | DOWNSPOUT |
| DWG | DRAWING |
| E | EAST, EXISTING |
| EA | EACH |
| EF | EACH FACE |
| ELEV | ELEVATION |
| ELEC | ELECTRIC |
| EP | EDGE OF PAVEMENT |
| EQ | EQUAL |
| EQUAL | EQUALIZATION |
| EQUIP | EQUIPMENT |
| EXH | EXHAUST |
| EX | EXISTING |
| EXP | EXPANSION, EXPOSED |
| EXP JT | EXPANSION JOINT |
| EXT | EXTERIOR |
| ETR | EXISTING TO REMAIN |
| F | FIRE, FOAM |
| FD | FLOOR DRAIN |
| FDN | FOUNDATION |
| FFE | FINISHED FLOOR ELEVATION |
| FG | FINISH GRADE |
| FH | FIRE HYDRANT |
| FIG | FIGURE |
| FIN | FINISH |
| FLA | FLASHING |
| FLR | FLOOR |
| FLUOR | FLUORESCENT |
| FM | FORCE MAIN |
| FTG | FOOTING |
| FRP | FIBERGLASS REINFORCED PLASTIC |
| GA | GAGE |
| GALV | GALVANIZED |
| GR | GRADE |
| GRD | GROUND |
| GS | GRAVITY SEWER |
| GV | GATE VALVE |
| GW | GROUND WATER |
| GYP | GYPSUM |
| H, HGT | HEIGHT |
| HDW | HARDWARE |
| HORIZ | HORIZONTAL |
| HP | HORSEPOWER, HIGH POINT |
| HR | HOUR |
| HS | HIGH STRENGTH |
| HWL | HIGH WATER LEVEL |
| HYD | HYDRANT |
| ID | INSIDE DIAMETER, INSIDE DIMENSION |
| INT | INTERIOR |
| INSUL | INSULATION, INSULATED |
| INV | INVERT |
| JB | JUNCTION BOX |
| JCT | JUNCTION |
| JST | JOIST |
| JT | JOINT |
| JP5 | JET FUEL NO 5 |
| KO | KNOCK OUT |
| KV | KILOVOLT |
| KVA | KILOVOLT–AMPERE |
| KW | KILOWATT |
| L | LITER |
| LL | LIVE LOAD |
| LT | LIGHT |
| LWL | LOW WATER LEVEL/LINE |
| LN | LINTEL |
| LV | LOUVER |
| M | METER |
| MAS | MASONRY |
| MATL | MATERIAL |
| MAX | MAXIMUM |
| MBH | THOUSAND BTU PER HOUR |
| MECH | MECHANICAL |
| MG | MATCH GRADE |
| MH | MANHOLE |
| MHW | MEAN HIGH WATER |
| MIN | MINIMUM |
| MISC | MISCELLANEOUS |
| MJ | MECHANICAL JOINT |
| MLW | MEAN LOW WATER |
| MM | MILLIMETER |
| MON | MONITORING |
| N | NORTH |
| NC | NON CORROSIVE |
| NEC | NATIONAL ELECTRICAL CODE |
| NGS | NATIONAL GEODETIC SURVEY |
| NIC | NOT IN CONTRACT |
| NNS | NORFOLK NAVAL STATION |
| NO | NUMBER |
| NOM | NOMINAL |
| NOS | NAVAL OPERATIONS STATION |
| NPW | NON POTABLE WATER |
| NRS | NON RISING STEM |
| NTS | NOT TO SCALE |
| OC | ON CENTER |
| OD | OUTSIDE DIAMETER |
| OPNG | OPENING |
| OPP | OPPOSITE |
| OWCP | OILY WASTE COLLECTION PIPING (GRAVITY) |
| OWFM | OILY WASTE FORCE MAIN |
| OWWO | OILY WASTE/WASTE OIL |
| P | PIPE |
| PE | PLAIN END |
| PI | POINT OF INTERSECTION |
| PIV | POST INDICATOR VALVE |
| PJF | PREFORMED JOINT FILLER |
| PNL | PANEL |
| PRELIM | PRELIMINARY |
| PRV | PRESSURE RELIEF VALVE |
| PT | POINT, POINT OF TANGENT |
| PV | PLUG VALVE |
| PVC | POLYVINYL CHLORIDE |
| PVMT | PAVEMENT |
| PW | POTABLE WATER |
| R | RADIUS, RISER |
| RAD | RADIUS |
| RCP | REINFORCED CONCRETE PIPE |
| RD | ROOF DRAIN, ROAD |
| RED | REDUCING, REDUCER |
| REINF | REINFORCEMENT, REINFORCED |
| REQD | REQUIRED |
| REV | REVISION |
| RF | ROOF |
| RFG | ROOFING |
| RM | ROOM |
| RO | RECOVERED OIL |
| RPM | REVOLUTIONS PER MINUTE |
| RET | RETAINING |
| R.R. | RAILROAD |
| S | SOUTH |
| SAN | SANITARY SEWER |
| SCH | SCHEDULE |
| SD | STORM DRAIN |
| SECT | SECTION |
| SERV | SERVICE |
| SHT | SHEET |
| SL | SLOPE, SLUDGE |
| SLWD | STATION LOW WATER DATUM |
| SM | SQUARE METER |
| SP | STATIC PRESSURE, SINGLE POLE |
| SPEC | SPECIFICATION |
| SQ | SQUARE |
| SS | STAINLESS STEEL |
| ST | STREET, STEAM, STORAGE/TRANSFER |
| STA | STATION |
| STD | STANDARD |
| STL | STEEL |
| SUP | SUPPORT |
| SUSP | SUSPENDED |
| SYS | SYSTEM |
| SWL | SOLID WHITE LINE |
| SDYL | SOLID DOUBLE YELLOW LINE |
| TB | TOP OF BANK |
| T&B | TOP AND BOTTOM |
| TC | TOP OF CURB |
| TEL | TELEPHONE |
| TEMP | TEMPERATURE, TEMPORARY |
| TERM | TERMINAL |
| TDH | TOTAL DYNAMIC HEAD (PUMPS) |
| THD | THREADED |
| THRU | THROUGH |
| TL | TOE (OF BANK) LINE (APPROX) |
| TP | TEST PIT |
| TS | TAPPING SLEEVE |
| TYP | TYPICAL |
| TS&V | TAPPING SLEEVE AND VALVE |
| UG | UNDERGROUND |
| UNK | UNKNOWN |
| V | VENT, VOLT, VALVE |
| VAC | VACUUM |
| VC | VITRIFIED CLAY |
| VCP | VITRIFIED CLAY PIPE |
| VENT | VENTILATION |
| VERT | VERTICAL |
| VLT | VAULT |
| W | WIDTH, WASTE, WATER, WATT, WEST |
| W/ | WITH |
| W/O | WITHOUT |
| WL | WATER LEVEL |
| WP | WATERPROOF, WEATHERPROOF |
| WS | WATER SURFACE, WATERSTOP |
| WT | WEIGHT |
| WWF | WELDED WIRE FABRIC |
| WWM | WELDED WIRE MESH |
| WWTP | WASTE WATER TREATMENT PLANT |
| XFMR | TRANSFORMER |
| X–STR | EXTRA STRENGTH |

# GENERAL NOTES

1. ALL DIMENSIONS, STATIONING, ELEVATIONS, INVERTS, SOUNDINGS AND PIPE SIZES ARE IN METRIC UNITS. NUMBERS WITH DECIMAL POINTS ARE METERS (I.E., 3.024) AND ALL NUMBERS WITHOUT DECIMALS ARE MILLIMETERS (I.E., 300).
2. THE TOPOGRAPHIC SURVEY WAS PERFORMED BY PWC NORFOLK (CODE 410) IN JULY 1997.
3. THE HYDROGRAPHIC SURVEY WAS PERFORMED BY PWC NORFOLK (CODE 411) IN JULY–SEPTEMBER 1997, USING A COMBINATION OF AUTOMATED, TAG–WIRE AND HANDLINE METHODS.
4. A SIDE–SCAN SONAR AND MAGNETOMETER SURVEY WAS CONDUCTED BY "WATERWAY SURVEYS & ENGINEERING, LTD." SEE SHEETS CS–1 THROUGH CS–6 FOR SURVEY RESULTS.
5. THESE SURVEYS DO NOT GUARANTEE THE EXISTENCE/NONEXISTENCE, SIZE, TYPE OR LOCATION OF UNDERGROUND UTILITIES. UTILITIES SHOWN ARE BASED ON ABOVE GROUND UTILITY STRUCTURES (i.e., VALVES, MANHOLES, ETC...) AND AVAILABLE UTILITY MAPS. THE CONTRACTOR SHALL FIELD VERIFY THE LOCATION OF ALL UTILITIES PRIOR TO CONSTRUCTION.

# LEGEND

| EXISTING | NEW | |
|---|---|---|
| | | BUILDINGS |
| | | BITUMINOUS CONCRETE |
| | | CONCRETE (PORTLAND CEMENT) |
| | | STONE/GRAVEL SURFACE |
| | | SAW CUT LINE |
| | | CONCRETE CURB |
| | | CONCRETE CURB AND GUTTER |
| 3.350 | 3.350 | SPOT ELEVATIONS |
| 14 | | CONTOUR |
| X X | XX XX | FENCE |
| E.W. | ø200 PW | WATER LINE (W/ PIPE SIZE INDICATED) |
| W.V. | | WATER VALVE |
| Hyd. | | FIRE HYDRANT |
| | | THRUST BLOCK |
| P.I.V. | | POST INDICATOR VALVE |
| 300mm E.S. | ø380 SD | STORM DRAIN (W/ PIPE SIZE INDICATED) |
| | | CATCH BASIN |
| | | STORM MANHOLE |
| OWCP | | OILY WASTE/WASTE OIL COLLECTION PIPE (W/ PIPE SIZE INDICATED) |
| OWFM | ø250 OWWO (FM) | OILY WASTE/WASTE OIL FORCE MAIN (W/ PIPE SIZE INDICATED) |
| 200mm E. San. | ø150 SAN | SANITARY SEWER (W/ PIPE SIZE INDICATED) |
| | | SANITARY SEWER OR OWWO MANHOLE |
| | | PIPE PLUG |
| | | GUARD POST |
| C.O. | CO | CLEAN OUT |
| B–1 | | SOIL BORING |
| | | CONNECT NEW TO EXISTING |
| EUGE | | UNDERGROUND ELECTRIC LINE |
| EOHE | | OVERHEAD ELECTRIC LINE |
| E | | ELECTRIC MANHOLE |
| EUGT | | UNDERGROUND TELEPHONE LINE |
| EOT | | OVERHEAD TELEPHONE LINE |
| T | | TELEPHONE MANHOLE |
| CTV | | UNDERGROUND CABLE TV |
| EOC | | OVERHEAD CABLE TV |
| CTV | | CABLE TV BOX |
| | | POWER POLE |
| | | POWER POLE W/GUY WIRE |
| | | LIGHT POLE |
| EUGS | | UNDERGROUND STEAM |
| EOHS | | OVERHEAD STEAM |
| | | STEAM VAULT |
| EUGF | | UNDERGROUND FUEL |
| EUGAS | | UNDERGROUND GAS |
| MW | | MON. WELL LOCATION |
| C.W. | | COOLING WELL |
| F | | FUEL MANHOLE |
| B | | OWFM BLOW–OFF VALVE |
| V | | OWFM AIR VENT |

SEE MECH/ELEC SHEETS

| REVISIONS | | | |
|---|---|---|---|
| SYM. | DESCRIPTION | DATE | APPROVED |

DESIGNED & ENGINEERED BY: LANTDIV NAVAL FACILITIES ENGINEERING COMMAND

SEAL

APPROVED

ACTIVITY – SATISFACTORY TO

DATE

APPROVED
FOR CO FOR COMMANDER NAVFAC
1/25/99

DATE

| A/E | EFD |
|---|---|
| DESIGN | TAR |
| DRAWN | TAR |
| REVIEW | JSC |
| QC | |
| CHIEF ARCH./ ENGR. | |
| PROJECT MANAGER | DWB |
| FIRE PROTECTION | DWR |
| BRANCH MANAGER | |
| DESIGN DIRECTOR | |

DEPARTMENT OF THE NAVY — NAVAL FACILITIES ENGINEERING COMMAND — NAVAL STATION ATLANTIC DIVISION NORFOLK, VIRGINIA

NAVAL STATION NORFOLK, VIRGINIA

PIER 2 REPLACEMENT

NOTES, ABBREVIATIONS AND LEGEND

| | |
|---|---|
| CODE ID. NO. 80091 | SIZE D |
| SCALE: | NO SCALE |
| EFD NO. | 49389 3 |
| STA. PROJ. NO. | P–355 |
| SPEC. NO. | 05–97–7041 |
| CONSTR. CONTR. NO. | N62470–97–B–7041 |
| NAVFAC DRAWING NO. | 439389 3 |
| SHEET | 3 OF 240 |

C–1

FILENAME: 7041C001.DWG, PLOT SCALE: 1=1, SAVED ON 01/07/99 AT 11:15, XREFS: NONE

DRAWFORM REVISION 27 JULY 98

(STATE PLANE)

NOTE

NORTH ARROWS REPRESENT STATE PLANE NORTH UNLESS OTHERWISE NOTED.

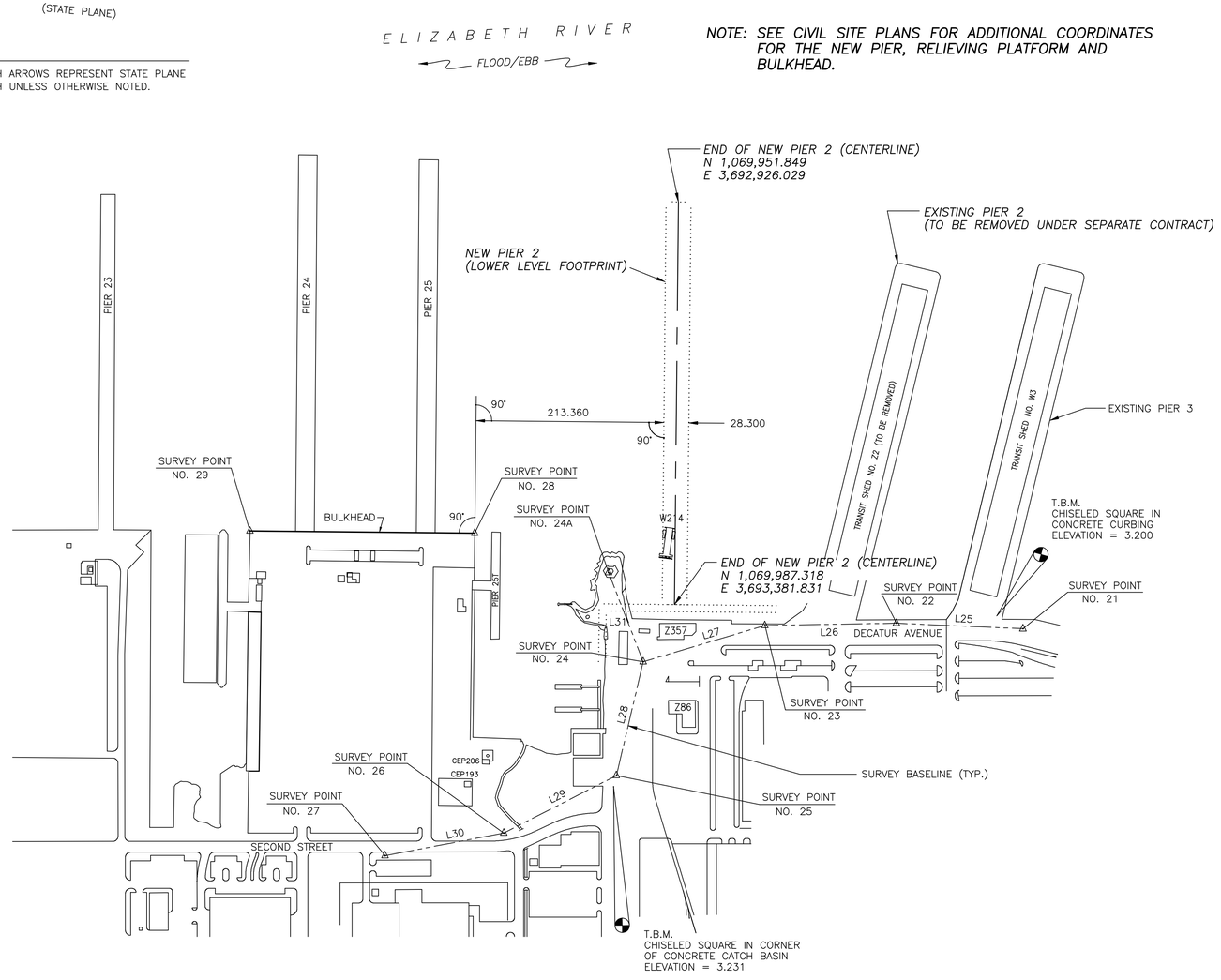


NEW PIER 2 LAYOUT PLAN

SCALE 1:3000

NOTE: SEE CIVIL SITE PLANS FOR ADDITIONAL COORDINATES FOR THE NEW PIER, RELIEVING PLATFORM AND BULKHEAD.

SURVEY COORDINATE POINT LISTING

| POINT NUMBER | NORTHING | EASTING | ELEV. (*) (METERS) | DESCRIPTION |
|---|---|---|---|---|
| 21 | 1,070,384.192 | 3,693,374.651 | 3.23 | PK NAIL |
| 22 | 1,070,240.369 | 3,693,380.908 | 2.936 | PK NAIL |
| 23 | 1,070,091.910 | 3,693,396.525 | 3.024 | PK NAIL |
| 24 | 1,069,957.693 | 3,693,449.623 | 3.327 | PK NAIL |
| 25 | 1,069,938.702 | 3,693,581.067 | 3.394 | CUT CROSS |
| 26 | 1,06,817.010 | 3,693,657.248 | 3.893 | CUT CROSS |
| 27 | 1,069,685.040 | 3,693,694.647 | 4.167 | CUT CROSS |
| 24A | 1,069,909.641 | 3,693,352.194 | 3.095 | DRILL HOLE |
| 28 | 1,069,754.381 | 3,693,320.921 | | CORNER OF BULKHEAD |
| 29 | 1,069,499.799 | 3,693,340.731 | | CORNER OF BULKHEAD |

NOTE: COORDINATE VALUES ARE BASED ON METRIC STATE PLANE GRID

(*) ELEVATIONS (IN METERS) ARE BASED UPON STATION LOW WATER DATUM (SLWD=0.000)

BASELINE TABLE
(USING STATE PLANE NORTH)

| LINE | DIRECTION | DISTANCE |
|---|---|---|
| L25 | S02°29'28"E | 143.959 |
| L26 | S06°00'18"E | 149.278 |
| L27 | S21°35'03"E | 144.338 |
| L28 | S81°46'43"E | 132.809 |
| L29 | S32°02'49"E | 143.570 |
| L30 | S15°49'21"E | 137.167 |
| L31 | S63°44'51"W | 108.634 |

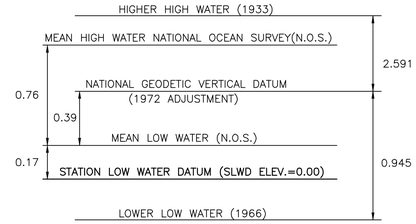


DIAGRAM OF DATUM PLANE FOR NORFOLK NAVAL STATION

NOT TO SCALE
(DIMENSIONS SHOWN ARE METERS)

GRAPHIC SCALE 1:3000

1:3000 0 50 100 200 300m

REVISIONS

| SYM. | DESCRIPTION | DATE | APPROVED |
|---|---|---|---|

DESIGNED & ENGINEERED BY: LANTDIV NAVAL FACILITIES ENGINEERING COMMAND

SEAL

APPROVED

ACTIVITY – SATISFACTORY TO

DATE

APPROVED
FOR CO FOR COMMANDER NAVFAC
1/25/99

DATE

| A/E | EFD |
|---|---|
| DESIGN | TAR |
| DRAWN | TAR |
| REVIEW | JSC |
| QC | |
| CHIEF ARCH./ ENGR. | |
| PROJECT MANAGER | DWB |
| FIRE PROTECTION | DWR |
| BRANCH MANAGER | |
| DESIGN DIRECTOR | |

DEPARTMENT OF THE NAVY
NAVAL STATION
ATLANTIC DIVISION
NAVAL FACILITIES ENGINEERING COMMAND
NORFOLK, VIRGINIA
NAVAL STATION NORFOLK, VIRGINIA

# PIER 2 REPLACEMENT

NEW PIER 2 LAYOUT PLAN

| | |
|---|---|
| CODE ID. NO. 80091 | SIZE D |
| SCALE: | AS NOTED |
| EFD NO. | 493894 |
| STA. PROJ. NO. | P-355 |
| SPEC. NO. | 05-97-7041 |
| CONSTR. CONTR. NO. | N62470-97-B-7041 |
| NAVFAC DRAWING NO. | 4393894 |
| SHEET | 4 OF 240 |

C-2

DRAWFORM REVISION 27 JULY 98

FILENAME: 7041C002.DWG, PLOT SCALE: 1=1, SAVED ON 01/07/99 AT 11:16, XREFS: NONE

8 7 6 5 4 3 2 1

D C B A

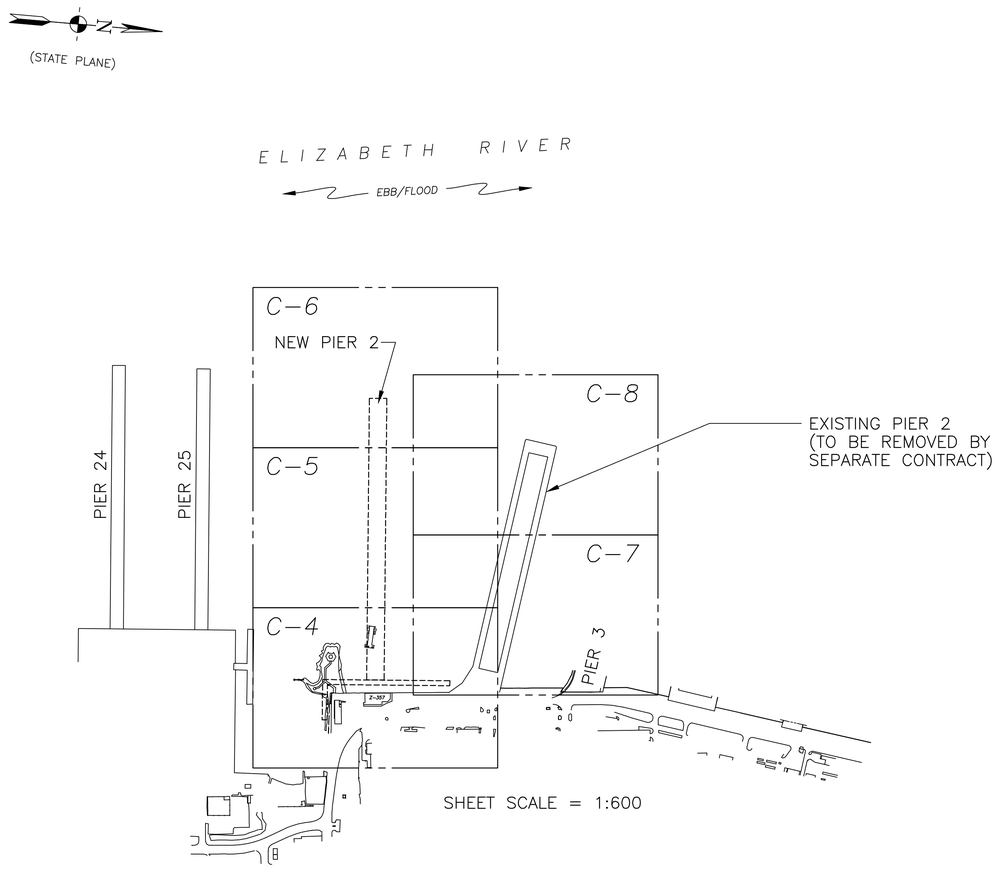


KEY PLAN (SHEETS C-4 THROUGH C-8)

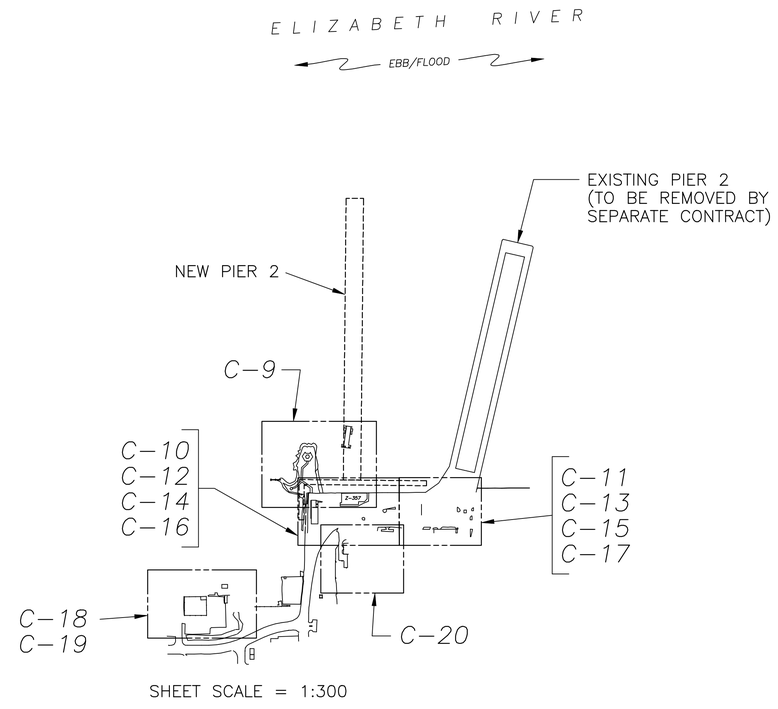


KEY PLAN (SHEETS C-9 THROUGH C-20)

# KEY PLANS (CIVIL SHEETS)

NTS

REVISIONS

| SYM | DESCRIPTION | DATE | APPROVED |
|---|---|---|---|

DESIGNED & ENGINEERED BY: LANTDIV NAVAL FACILITIES ENGINEERING COMMAND

SEAL

APPROVED

ACTIVITY – SATISFACTORY TO

DATE

APPROVED
FOR EFD FOR COMMANDER NAVFAC
1/25/99

DATE

| A/E | EFD |
|---|---|
| DESIGN | TAR |
| DRAWN | TAR |
| REVIEW | JSC |
| QC | |
| CHIEF ARCH./ ENGR. | |
| PROJECT MANAGER | DWB |
| FIRE PROTECTION | DWR |
| BRANCH MANAGER | |
| DESIGN DIRECTOR | |

DEPARTMENT OF THE NAVY
NAVAL FACILITIES ENGINEERING COMMAND
ATLANTIC DIVISION
NAVAL STATION NORFOLK, VIRGINIA
NAVAL STATION NORFOLK, VIRGINIA
PIER 2 REPLACEMENT
KEY PLANS (CIVIL SHEETS)

| | |
|---|---|
| CODE ID. NO. 80091 | SIZE D |
| SCALE: NONE | |
| EFD NO. 493895 | |
| STA. PROJ. NO. P-355 | |
| SPEC. NO. 05-97-7041 | |
| CONSTR. CONTR. NO. N62470-97-B-7041 | |
| NAVFAC DRAWING NO. 4393895 | |
| SHEET 5 OF 240 | |

C-3

DRAWFORM REVISION 27 JULY 98

FILENAME: 7041C003.DWG, PLOT SCALE: 1=1, SAVED ON 01/07/99 AT 11:16, XREFS: NONE

8 7 6 5 4 3 2 1

D C B A

MATCHLINE – SEE SHEET C–5

MATCHLINE – SEE SHEET C–7

MATCHLINE – SEE SHEET C–7

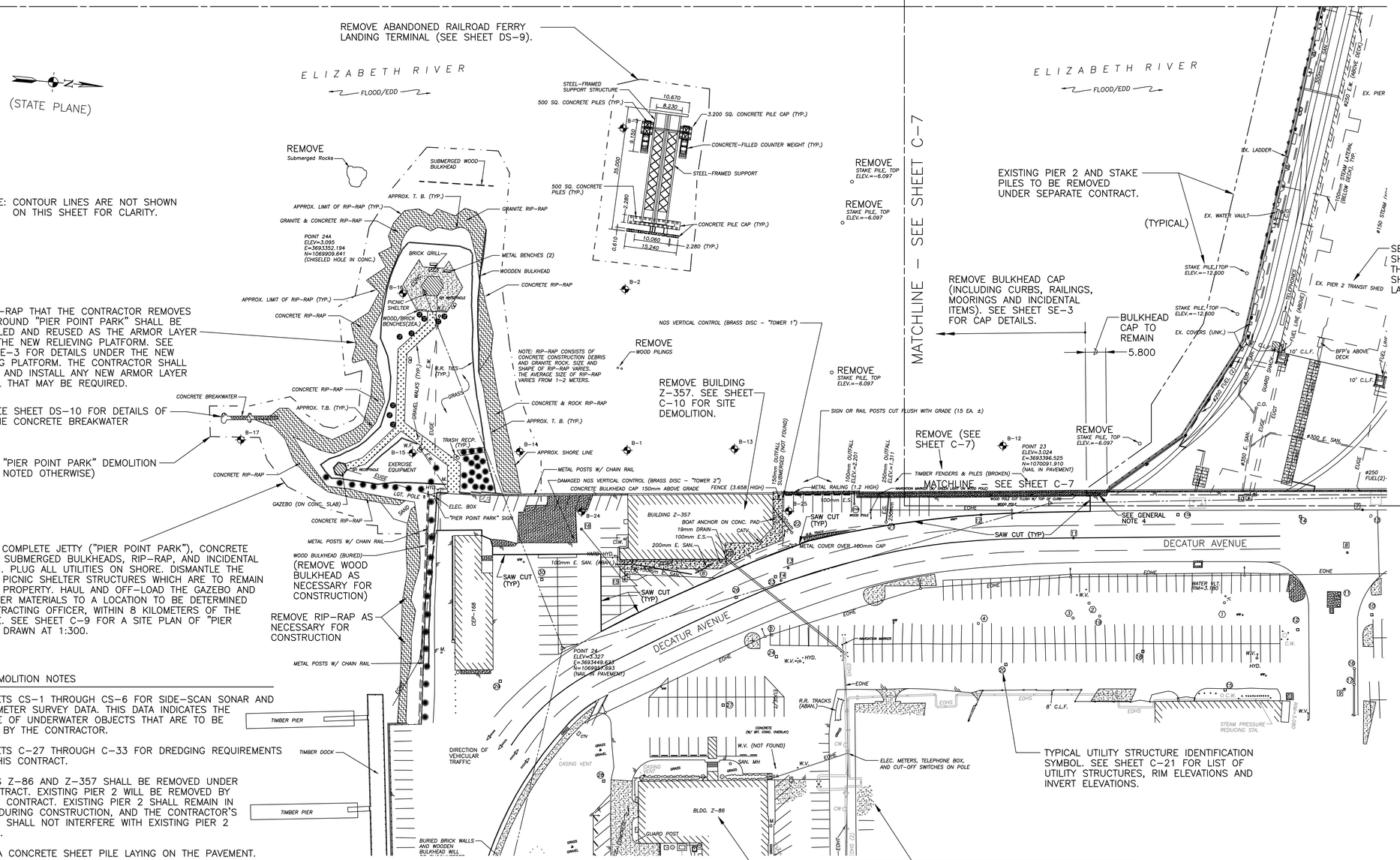


BUILDING Z–86 SHALL BE USED BY THE CONTRACTOR FOR FIELD OFFICES, AND THE PARKING LOT ON THE EAST SIDE OF BUILDING Z–86 SHALL BE USED BY THE CONTRACTOR FOR STORAGE AND LAYDOWN SPACE. A PORTION OF THE PARKING LOT ON THE NORTH SIDE OF BUILDING Z–86 (NORTH OF THE OVERHEAD STEAM LINE) MAY ALSO BE USED BY THE CONTRACTOR. THE EXACT LIMITS FOR PARKING, STORAGE, LAYDOWN, ETC. THAT THE CONTRACTOR MAY USE IN THE VICINITY OF BUILDING Z–86 WILL BE IDENTIFIED BY THE CONTRACTING OFFICER. THE CONTRACTOR SHALL BE RESPONSIBLE FOR MAINTAINING THE BUILDING (INCLUDING PARKING, STORAGE, AND LAYDOWN AREAS) AND PROVIDING NORMAL MAINTENANCE, SECURITY, HOUSEKEEPING, ETC. DURING THE CONTRACT. ANY MODIFICATIONS TO SUIT THE CONTRACTOR WILL BE AT NO COST TO THE GOVERNMENT. THE GOVERNMENT WILL PROVIDE UTILITIES (I.E., WATER, SANITARY SEWER, STEAM AND ELECTRICITY) IN ACCORDANCE WITH THE CONTRACT SPECIFICATIONS. THE CONTRACTOR SHALL REIMBURSE THE GOVERNMENT FOR THESE UTILITIES IN ACCORDANCE WITH THE CONTRACT SPECIFICATIONS. TELEPHONE AND OTHER COMMUNICATION SERVICES WILL NOT BE PROVIDED BY THE GOVERNMENT. THE CONTRACTOR SHALL BE RESPONSIBLE FOR OBTAINING TELEPHONE AND OTHER COMMUNICATION SERVICES FROM LOCAL COMPANIES.

**THE CONTRACTOR SHALL REMOVE BUILDING Z–86 NEAR THE COMPLETION OF THIS CONTRACT, AS DETERMINED BY THE CONTRACTING OFFICER. SEE SHEET C–20 FOR BUILDING Z–86 SITE DEMOLITION.**

GENERAL DEMOLITION NOTES

1. SEE SHEETS CS–1 THROUGH CS–6 FOR SIDE–SCAN SONAR AND MAGNETOMETER SURVEY DATA. THIS DATA INDICATES THE PRESENCE OF UNDERWATER OBJECTS THAT ARE TO BE REMOVED BY THE CONTRACTOR.
2. SEE SHEETS C–27 THROUGH C–33 FOR DREDGING REQUIREMENTS UNDER THIS CONTRACT.
3. BUILDINGS Z–86 AND Z–357 SHALL BE REMOVED UNDER THIS CONTRACT. EXISTING PIER 2 WILL BE REMOVED BY SEPARATE CONTRACT. EXISTING PIER 2 SHALL REMAIN IN SERVICE DURING CONSTRUCTION, AND THE CONTRACTOR'S ACTIVITIES SHALL NOT INTERFERE WITH EXISTING PIER 2 ACTIVITIES.
4. REMOVE A CONCRETE SHEET PILE LAYING ON THE PAVEMENT.
5. REMOVE ALL PAVEMENT, SLABS, AND BUILDING FOUNDATIONS FROM THE INDICATED SAW CUT LINE TO THE EXISTING BULKHEAD. FOUNDATIONS SHALL BE REMOVED TO 1 METER BELOW GRADE OR AS REQUIRED TO INSTALL NEW WORK OR AS INDICATED ON OTHER CONTRACT DRAWINGS. SEE SHEETS C–9, C–10 AND C–11 FOR SPECIFIC SITE DEMOLITION REQUIREMENTS. SEE SHEETS MU–1 AND MU–2, AND EU–5 THROUGH EU–9 FOR ADDITIONAL PAVEMENT REMOVAL AND REPLACEMENT REQUIREMENTS.
6. AT LEAST ONE LANE OF TRAFFIC SHALL REMAIN OPEN ON DECATUR AVENUE, IN EACH DIRECTION OF TRAVEL, DURING CONSTRUCTION. THE CONTRACTOR SHALL PROVIDE ALL TEMPORARY EXCAVATION COVERS, BARRICADES, SAFETY DEVICES, AND TRAFFIC CONTROL PERSONNEL WHILE WORKING IN OR ADJACENT TO ROADWAYS AND PARKING LOTS.

# DEMOLITION PLAN (1 OF 5)

1 : 600

1:600 0 10 20 30 40 50 60m

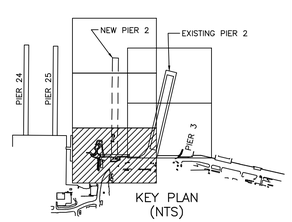


REVISIONS

| SYM. | DESCRIPTION | DATE | APPROVED |
|---|---|---|---|

DESIGNED & ENGINEERED BY: LANTDIV NAVAL FACILITIES ENGINEERING COMMAND

SEAL

APPROVED

ACTIVITY – SATISFACTORY TO

DATE

APPROVED
FOR EFD FOR COMMANDER NAVFAC
1/25/99

DATE

| A/E | EFD |
|---|---|
| DESIGN | TAR |
| DRAWN | TAR |
| REVIEW | JSC |
| QC | |
| CHIEF ARCH./ ENGR. | |
| PROJECT MANAGER | DWB |
| FIRE PROTECTION | DWR |
| BRANCH MANAGER | |
| DESIGN DIRECTOR | |

DEPARTMENT OF THE NAVY
NAVAL STATION
ATLANTIC DIVISION
NAVAL FACILITIES ENGINEERING COMMAND
NORFOLK, VIRGINIA

NAVAL STATION NORFOLK, VIRGINIA
PIER 2 REPLACEMENT
DEMOLITION PLAN (1 OF 5)

| | |
|---|---|
| CODE ID. NO. 80091 | SIZE D |
| SCALE: | 1:600 |
| EFD NO. | 493896 |
| STA. PROJ. NO. | P–355 |
| SPEC. NO. | 05–97–7041 |
| CONSTR. CONTR. NO. | N62470–97–B–7041 |
| NAVFAC DRAWING NO. | 4393896 |
| SHEET | 6 OF 240 |

C–4

DRAWFORM REVISION 27 JULY 98

FILENAME: 7041C004.DWG, PLOT SCALE: 1=1, SAVED ON 01/07/99 AT 11:26, XREFS: 7041CX01.DWG

8 7 6 5 4 3 2 1

D C B A

MATCHLINE – SEE SHEET C–6

(STATE PLANE)

ELIZABETH RIVER

FLOOD/EBB

B–9

B–8

B–19

B–7

B–6

B–5

REMOVE
7–PILE CLUSTER

B–18

B–4

B–23

MATCHLINE – SEE SHEET C–4

MATCHLINE – SEE SHEET C–8

MATCHLINE – SEE SHEET C–7

B–22

ELIZABETH RIVER

FLOOD/EBB

EX

EXPANSI

EX. (

EX. COVERS

REMOVE
STAKE PILE, TOP
ELEV.=-6.097

REMOVE
STAKE PILE, TOP
ELEV.=-6.097

REMOVE
STAKE PILE, TOP
ELEV.=-6.097

MATCHLINE – SEE SHEET C–8

MATCHLINE – SEE SHEET C–7

EX. WATER VAULT
EX. COVER (UNK.)

REMOVE
STAKE PILE, TOP
ELEV.=-16.768

EX. COVERS (UNK.)

EXISTING PIER 2 AND STAKE
PILES TO BE REMOVED
UNDER SEPARATE CONTRACT.
(TYPICAL)

STAKE PILE, TOP
ELEV.=-12.500

STAKE PILE, TOP
ELEV.=-12.500

EX. ELEC. TRANSFORMER (TYP.)

EX. WATER VAULT

NEW PIER 2

EXISTING PIER 2

PIER 24

PIER 25

PIER 3

KEY PLAN
(NTS)

# DEMOLITION PLAN (2 OF 5)

1 : 600

1:600 0 10 20 30 40 50 60m

| REVISIONS | | | |
|---|---|---|---|
| SYM. | DESCRIPTION | DATE | APPROVED |

DESIGNED & ENGINEERED BY:
LANTDIV
NAVAL FACILITIES ENGINEERING COMMAND

SEAL

APPROVED

ACTIVITY – SATISFACTORY TO

DATE

APPROVED
FOR EFD FOR COMMANDER NAVFAC
1/25/99

DATE

| A/E | EFD |
|---|---|
| DESIGN | TAR |
| DRAWN | TAR |
| REVIEW | JSC |
| QC | |
| CHIEF ARCH./ ENGR. | |
| PROJECT MANAGER | DWB |
| FIRE PROTECTION | DWR |
| BRANCH MANAGER | |
| DESIGN DIRECTOR | |

DEPARTMENT OF THE NAVY
NAVAL STATION
ATLANTIC DIVISION
NAVAL FACILITIES ENGINEERING COMMAND
NORFOLK, VIRGINIA

NAVAL STATION
NORFOLK, VIRGINIA

**PIER 2 REPLACEMENT**

DEMOLITION PLAN (2 OF 5)

| | |
|---|---|
| CODE ID. NO. 80091 | SIZE D |
| SCALE: | 1:600 |
| EFD NO. | 493897 |
| STA. PROJ. NO. | P–355 |
| SPEC. NO. | 05–97–7041 |
| CONSTR. CONTR. NO. | N62470–97–B–7041 |
| NAVFAC DRAWING NO. | 439389 7 |
| SHEET | 7 OF 240 |

**C–5**

DRAWFORM REVISION 27 JULY 98

FILENAME: 7041C005.DWG, PLOT SCALE: 1=1, SAVED ON 01/07/99 AT 12:19, XREFS: 7041CX01.DWG

8 7 6 5 4 3 2 1

D C B A

(STATE PLANE)

# "NO DEMOLITION... THIS SHEET"

(SEE SHEETS C-27 THROUGH C-33 FOR DREDGING REQUIREMENTS)

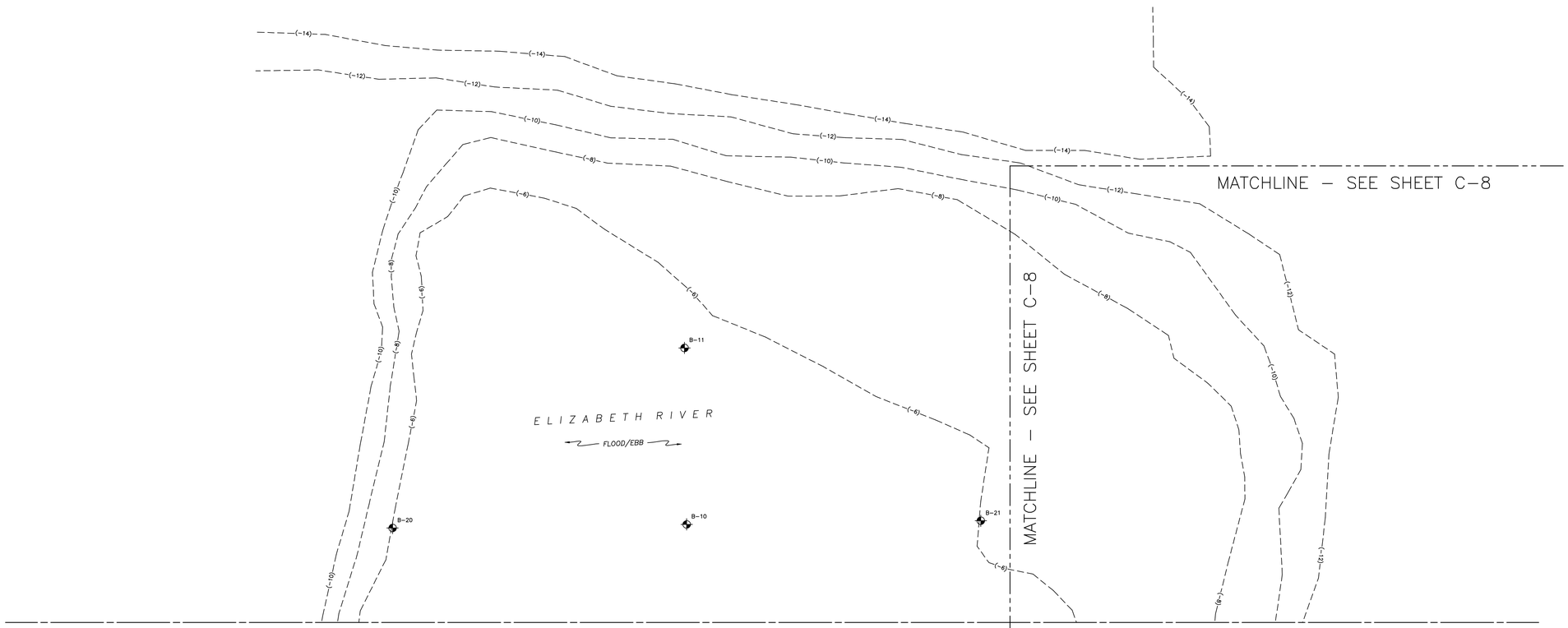


## DEMOLITION PLAN (3 OF 5)

1 : 600

1:600 0 10 20 30 40 50 60m

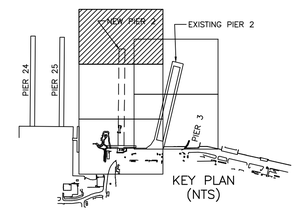


KEY PLAN (NTS)

| REVISIONS | | | |
|---|---|---|---|
| SYM. | DESCRIPTION | DATE | APPROVED |

DESIGNED & ENGINEERED BY: LANTDIV NAVAL FACILITIES ENGINEERING COMMAND

SEAL

APPROVED

ACTIVITY – SATISFACTORY TO

DATE

APPROVED
FOR EFD FOR COMMANDER NAVFAC
1/25/99

DATE

| A/E | EFD |
|---|---|
| DESIGN | TAR |
| DRAWN | TAR |
| REVIEW | JSC |
| QC | |
| CHIEF ARCH./ ENGR. | |
| PROJECT MANAGER | DWB |
| FIRE PROTECTION | DWR |
| BRANCH MANAGER | |
| DESIGN DIRECTOR | |

DEPARTMENT OF THE NAVY
NAVAL STATION
NAVAL STATION NORFOLK, VIRGINIA
ATLANTIC DIVISION
NAVAL FACILITIES ENGINEERING COMMAND
NORFOLK, VIRGINIA

**PIER 2 REPLACEMENT**

DEMOLITION PLAN (3 OF 5)

| | |
|---|---|
| CODE ID. NO. 80091 | SIZE D |
| SCALE: 1:600 | |
| EFD NO. 493898 | |
| STA. PROJ. NO. P-355 | |
| SPEC. NO. 05-97-7041 | |
| CONSTR. CONTR. NO. N62470-97-B-7041 | |
| NAVFAC DRAWING NO. 4393898 | |
| SHEET 8 OF 240 | |

**C-6**

FILENAME: 7041C006.DWG, PLOT SCALE: 1=1, SAVED ON 01/07/99 AT 12:20, XREFS: 7041CX01.DWG

DRAWFORM REVISION 27 JULY 98

8 7 6 5 4 3 2 1

D C B A

THE INTERIOR OF THE TRANSIT SHED ON EXISTING PIER 2 SHALL BE USED BY THE CONTRACTOR FOR LAYDOWN AREA. THE CONTRACTOR SHALL BE RESPONSIBLE FOR MAINTAINING THE BUILDING AND PROVIDING NORMAL MAINTENANCE, SECURITY, HOUSEKEEPING, ETC. DURING THE CONTRACT. ANY MODIFICATIONS TO SUIT THE CONTRACTOR WILL BE AT NO COST TO THE GOVERNMENT. THE GOVERNMENT WILL PROVIDE UTILITIES (I.E., WATER, SANITARY SEWER, STEAM AND ELECTRICITY) IN ACCORDANCE WITH THE CONTRACT SPECIFICATIONS. THE CONTRACTOR SHALL REIMBURSE THE GOVERNMENT FOR THESE UTILITIES IN ACCORDANCE WITH THE CONTRACT SPECIFICATIONS. TELEPHONE AND OTHER COMMUNICATION SERVICES WILL NOT BE PROVIDED BY THE GOVERNMENT. THE CONTRACTOR SHALL BE RESPONSIBLE FOR OBTAINING TELEPHONE AND OTHER COMMUNICATION SERVICES FROM LOCAL COMPANIES.

THE EXISTING PIER 2 AREAS AROUND THE TRANSIT SHED (I.E., FIRE AND SERVICE LANES ALONG THE SIDES, RIVER END AND SHORE END, ETC.) SHALL NOT BE USED BY THE CONTRACTOR AS LAYDOWN SPACE. THE CONTRACTOR MAY TRANSIT THROUGH THESE AREAS IN ORDER TO ACCESS THE TRANSIT SHED. THE CONTRACTOR SHALL NOT DISTURB GOVERNMENT ACTIVITIES ON EXISTING PIER 2, AS THE EXISTING PIER WILL REMAIN ACTIVE AND IN USE DURING CONSTRUCTION OF THE NEW PIER.

# DEMOLITION PLAN (4 OF 5)

1 : 600

1:600 0 10 20 30 40 50 60m

KEY PLAN
(NTS)

REVISIONS

| SYM. | DESCRIPTION | DATE | APPROVED |
|---|---|---|---|

DESIGNED & ENGINEERED BY: LANTDIV NAVAL FACILITIES ENGINEERING COMMAND

SEAL

APPROVED

ACTIVITY – SATISFACTORY TO

DATE

APPROVED (signature)

FOR EFD FOR COMMANDER NAVFAC

1/25/99

DATE

| A/E | | EFD |
|---|---|---|
| | DESIGN | TAR |
| | DRAWN | TAR |
| | REVIEW | JSC |
| | QC | |
| | CHIEF | ARCH./ ENGR. |
| PROJECT MANAGER | | DWB |
| FIRE PROTECTION | | DWR |
| BRANCH MANAGER | | PTK |
| DESIGN DIRECTOR | | (signature) |

DEPARTMENT OF THE NAVY NAVAL FACILITIES ENGINEERING COMMAND

**ATLANTIC DIVISION**

NAVAL STATION NORFOLK, VIRGINIA

NAVAL STATION NORFOLK, VIRGINIA

## PIER 2 REPLACEMENT

DEMOLITION PLAN (4 OF 5)

| | |
|---|---|
| CODE ID. NO. 80091 | SIZE D |
| SCALE: 1:600 | |
| EFD NO. 493899 | |
| STA. PROJ. NO. P-355 | |
| SPEC. NO. 05-97-7041 | |
| CONSTR. CONTR. NO. N62470-97-B-7041 | |
| NAVFAC DRAWING NO. 4393899 | |
| SHEET 9 OF 240 | |
| C-7 | |

FILENAME: 7041C007.DWG, PLOT SCALE: 1=1, SAVED ON 01/07/99 AT 12:21, XREFS: 7041CX01.DWG

DRAWFORM REVISION 27 JULY 98

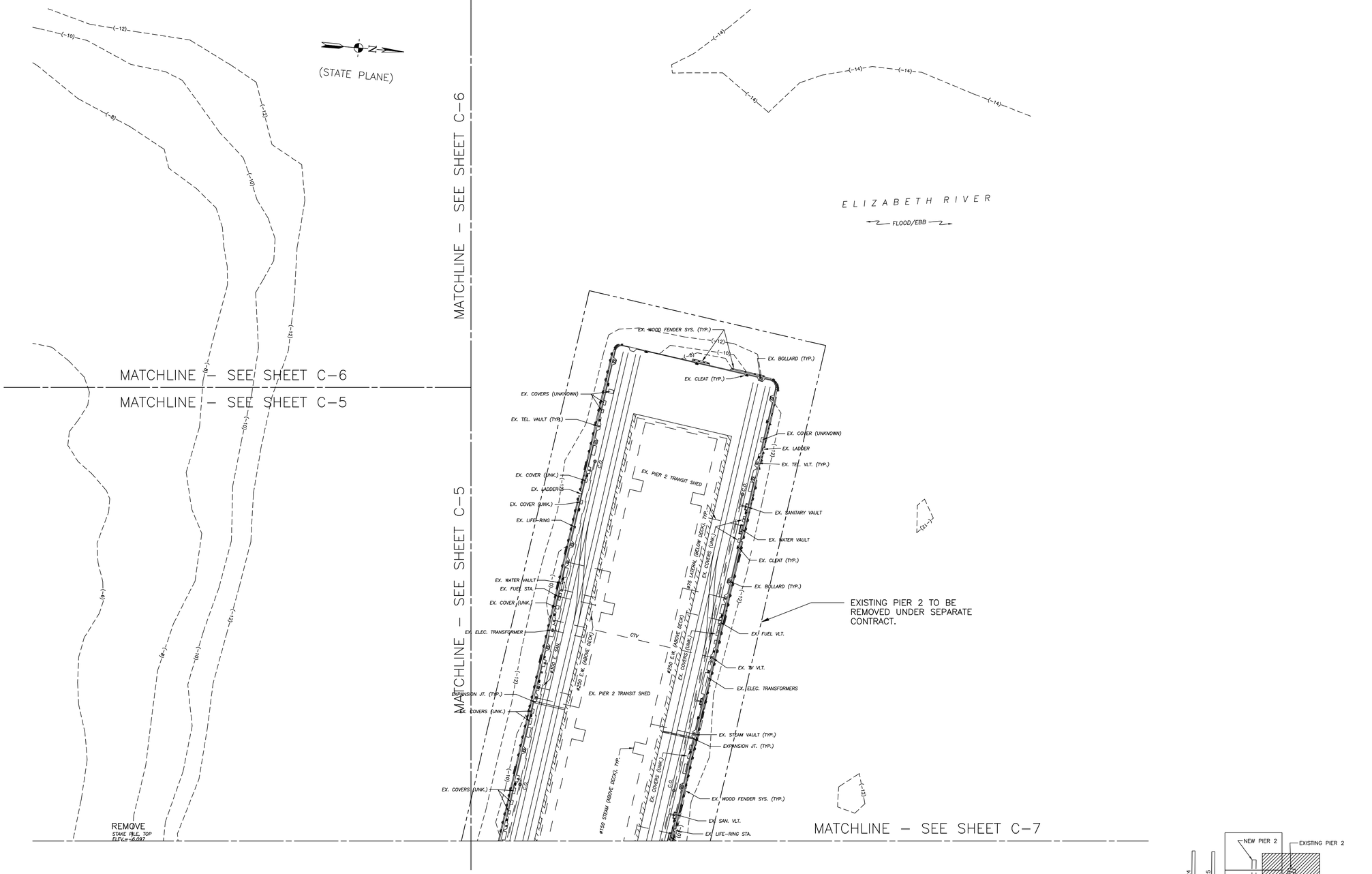


# DEMOLITION PLAN (5 OF 5)

1 : 600

1:600 0 10 20 30 40 50 60m

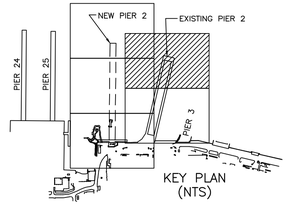


KEY PLAN (NTS)

| REVISIONS | | | |
|---|---|---|---|
| SYM. | DESCRIPTION | DATE | APPROVED |

DESIGNED & ENGINEERED BY: LANTDIV NAVAL FACILITIES ENGINEERING COMMAND

SEAL

APPROVED

ACTIVITY – SATISFACTORY TO

DATE

APPROVED
FOR EFD FOR COMMANDER NAVFAC
1/25/99

DATE

| A/E | EFD |
|---|---|
| DESIGN | TAR |
| DRAWN | TAR |
| REVIEW | JSC |
| QC | |
| CHIEF ARCH./ ENGR. | |
| PROJECT MANAGER | DWB |
| FIRE PROTECTION | DWR |
| BRANCH MANAGER | |
| DESIGN DIRECTOR | |

DEPARTMENT OF THE NAVY
NAVAL FACILITIES ENGINEERING COMMAND
ATLANTIC DIVISION
NAVAL STATION NORFOLK, VIRGINIA

**PIER 2 REPLACEMENT**

DEMOLITION PLAN (5 OF 5)

| | |
|---|---|
| CODE ID. NO. 80091 | SIZE D |
| SCALE: 1:600 | |
| EFD NO. 493900 | |
| STA. PROJ. NO. P–355 | |
| SPEC. NO. 05–97–7041 | |
| CONSTR. CONTR. NO. N62470–97–B–7041 | |
| NAVFAC DRAWING NO. 4393900 | |
| SHEET 10 OF 240 | |

**C–8**

DRAWFORM REVISION 27 JULY 98

FILENAME: 7041C008.DWG; PLOT SCALE: 1=1, SAVED ON 01/07/99 AT 12:23, XREFS: 7041CX01.DWG

8 7 6 5 4 3 2 1

D C B A

# PIER POINT PARK DEMOLITION PLAN

1 : 300

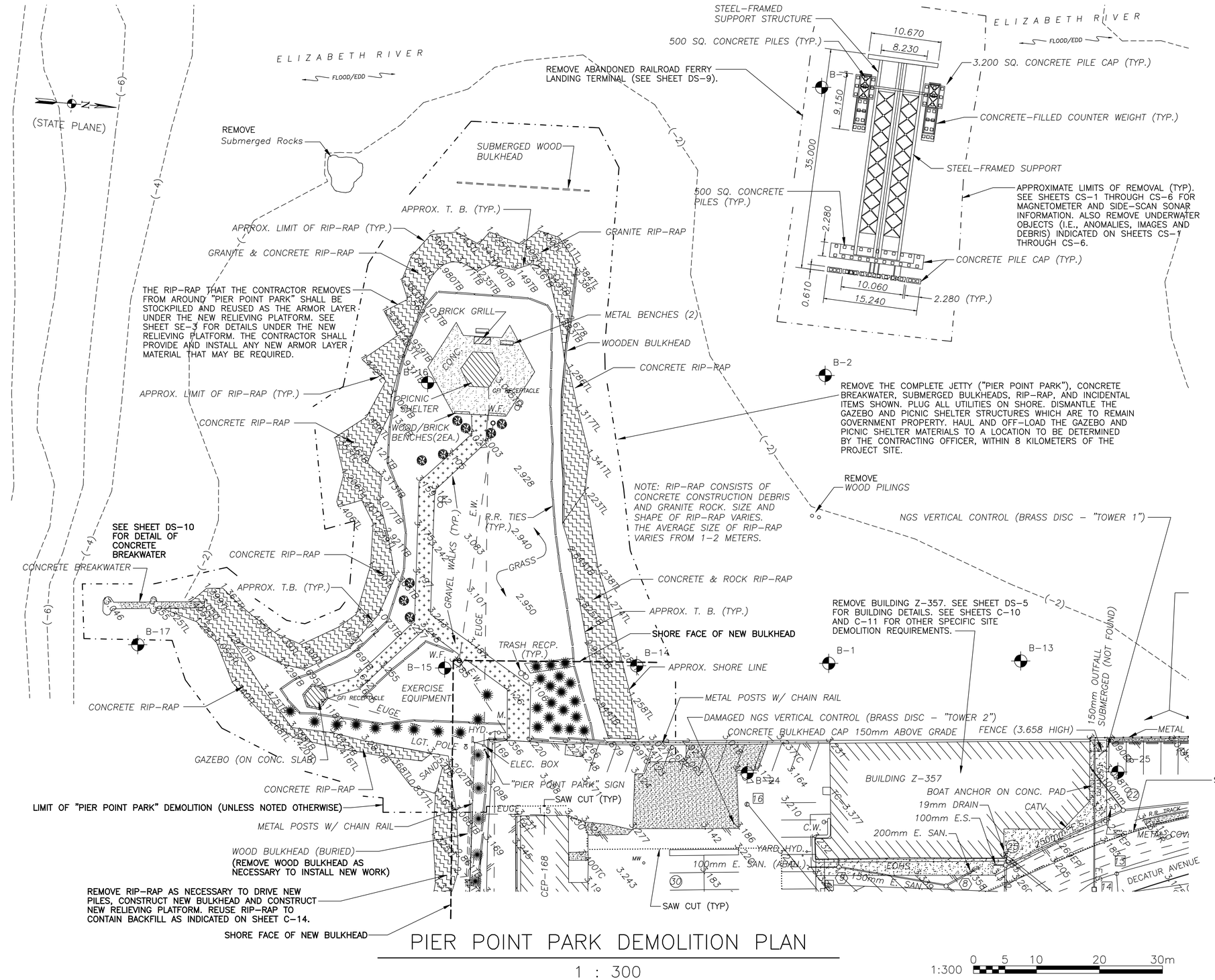


| REVISIONS | | | |
|---|---|---|---|
| SYM. | DESCRIPTION | DATE | APPROVED |

DESIGNED & ENGINEERED BY: LANTDIV NAVAL FACILITIES ENGINEERING COMMAND

SEAL

APPROVED

ACTIVITY - SATISFACTORY TO

DATE

APPROVED
FOR EFD FOR COMMANDER NAVFAC
1/25/99

DATE

| A/E | EFD |
|---|---|
| DESIGN | TAR |
| DRAWN | TAR |
| REVIEW | JSC |
| QC | |
| CHIEF ARCH./ ENGR. | |
| PROJECT MANAGER | DWB |
| FIRE PROTECTION | DWR |
| BRANCH MANAGER | |
| DESIGN DIRECTOR | |

DEPARTMENT OF THE NAVY
NAVAL FACILITIES ENGINEERING COMMAND
ATLANTIC DIVISION
NAVAL STATION
NORFOLK, VIRGINIA

# PIER 2 REPLACEMENT

PIER POINT PARK DEMOLITION

| | |
|---|---|
| CODE ID. NO. 80091 | SIZE D |
| SCALE: | 1:600 |
| EFD NO. | 493901 |
| STA. PROJ. NO. | P-355 |
| SPEC. NO. | 05-97-7041 |
| CONSTR. CONTR. NO. | N62470-97-B-7041 |
| NAVFAC DRAWING NO. | 4393901 |
| SHEET | 11 OF 240 |

**C-9**

DRAWFORM REVISION 27 JULY 98

FILENAME: 7041C009.DWG, PLOT SCALE: 1=1, SAVED ON 01/07/99 AT 12:24, XREFS: 7041CX01.DWG

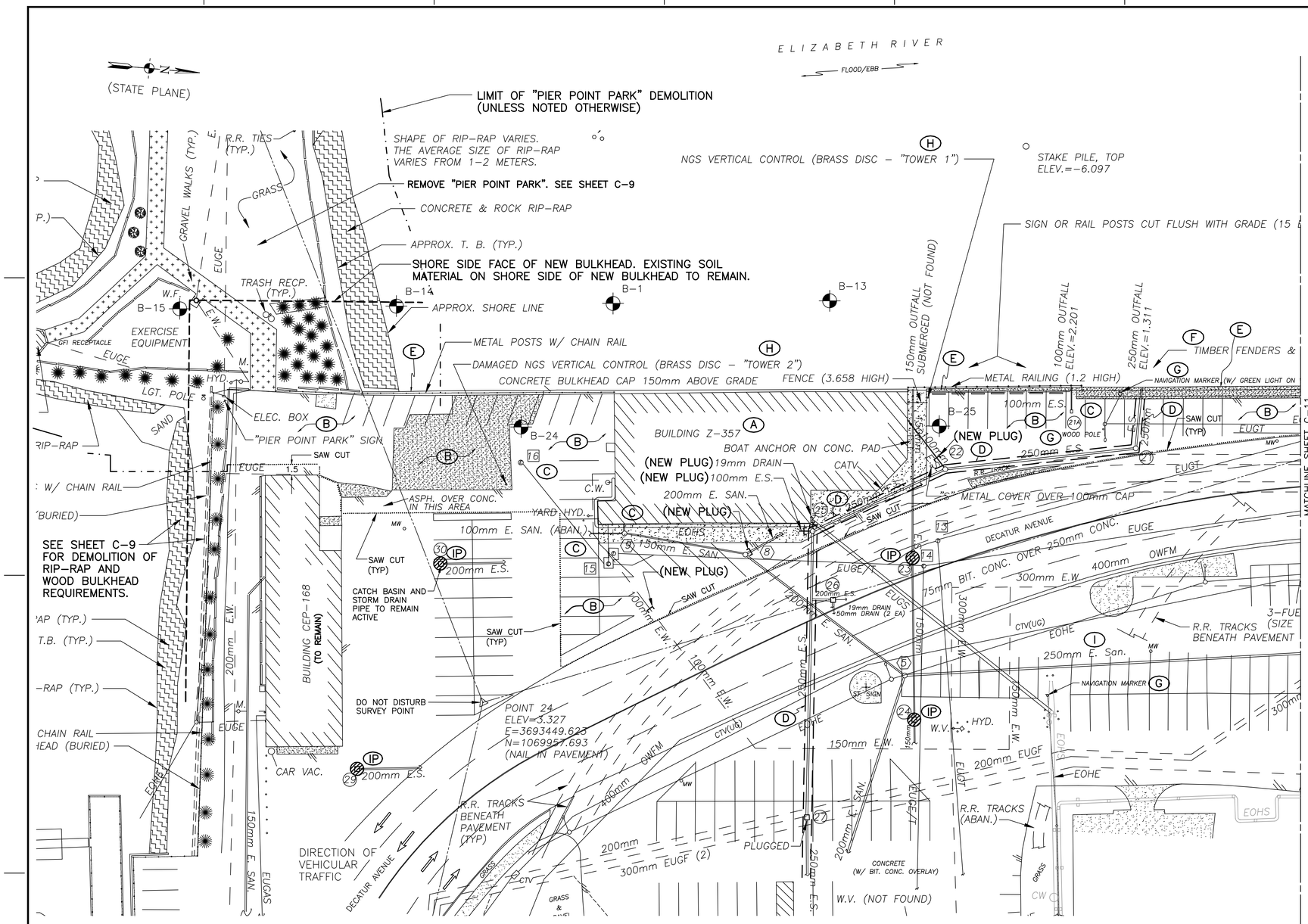


## GENERAL DEMOLITION NOTES

1. FOR ADDITIONAL PAVEMENT REMOVAL REQUIREMENTS TO INSTALL NEW UTILITIES, SEE SHEETS C-11, C-12, C-13, MECHANICAL SITE PLANS, AND ELECTRICAL SITE PLANS.
2. SEE MECHANICAL AND ELECTRICAL SHEETS FOR ADDITIONAL DEMOLITION REQUIREMENTS.
3. SEE DETAIL "G" ON SHEET C-22 FOR A PLAN VIEW DETAIL OF EXISTING MANHOLE (22).
4. FOR BIDDING PURPOSES ASSUME;
   (A). BITUMINOUS SURFACES CONSIST OF 100mm THICK BITUMINOUS CONCRETE OVER 250mm UNREINFORCED CONCRETE.
   (B). CONCRETE WALKS ARE 100mm THICK.
   (C). OLD CONCRETE BUILDING FOUNDATION SLABS ARE 300mm THICK, REINFORCED.
   (D). ABANDONED RAILROAD TRACKS (INCLUDING TIES) ARE ENCASED IN 600mm THICK UNREINFORCED CONCRETE AND OVERLAYED WITH 200mm THICK BITUMINOUS CONCRETE PAVEMENT.
5. IN LIEU OF REMOVING UTILITY STRUCTURES IN THEIR ENTIRETY, THE CONTRACTOR MAY REMOVE THE RIM AND COVER, REMOVE THE STRUCTURE TO 300mm BELOW GRADE AND FILL THE REMAINING STRUCTURE WITH SELECT FILL. ALL PIPES AND CONDUITS ABANDONED IN THE STRUCTURE SHALL BE PLUGGED.
6. REMOVE THE EXISTING 150mm SANITARY PIPE BETWEEN SANITARY MANHOLES (8) AND (9). SEE SHEET C-16 FOR NEW UTILITY CONSTRUCTION IN THIS AREA.
7. REMOVE AND RAISE THE RIMS OF SANITARY MANHOLE (8) AND STORM DRAIN MANHOLE (22). SEE SHEET C-14 FOR SPECIFIC INFORMATION.

## SPECIFIC DEMOLITION NOTES

(A) REMOVE BUILDING Z-357. ALL UTILITY PIPES THAT SERVE THE BUILDING, INCLUDING ABANDONED PIPES, SHALL BE PLUGGED AND ABANDONED IN PLACE. SEE MECHANICAL AND ELECTRICAL DEMOLITION SHEETS FOR ADDITIONAL BUILDING DEMOLITION REQUIREMENTS.

(B) REMOVE ALL PAVEMENTS, WALKS, UTILITY STRUCTURES, WOOD POLES, TIMBER FENDERS & PILES, RAILINGS, POSTS, FENCES, R.R. TRACKS, YARD HYDRANT, COOLING WELL, VEHICLE BUMPER GUARDS, AND ALL OTHER FEATURES SHOWN WITHIN THE LIMITS OF THE SAW CUT LINE. FOUNDATIONS AND UTILITY LINES MAY BE ABANDONED IN PLACE. UNDERGROUND UTILITY PIPES AND DUCTS MAY BE REMOVED AND PLUGGED AS NECESSARY TO INSTALL NEW WORK.

(C) REMOVE STRUCTURES 15, 16, (9), AND (21A).

(D) 250mm STORM DRAIN LINES AND MANHOLES INDICATED SHALL REMAIN ACTIVE DURING CONSTRUCTION. REPLACE THE EXISTING 250mm OUTFALL PIPE FROM MANHOLE (21) TO THE BULKHEAD AS SHOWN ON SHEET C-17. PROVIDE TEMPORARY OUTFALL FEATURES FROM MANHOLE (21) AS REQUIRED DURING CONSTRUCTION.

(E) SEE SHEET SE-3 FOR REMOVAL OF THE CONCRETE BULKHEAD CAP. REMOVE THE CONCRETE BULKHEAD AS REQUIRED TO INSTALL NEW WORK.

(F) REMOVE ALL TIMBER FENDERS AND PILES, INCLUDING TIMBERS THAT HAVE FALLEN INTO THE RIVER.

(G) WOOD POLES, NAVIGATIONAL AIDS AND LIGHTS ARE TO REMAIN ACTIVE.

(H) REMOVE NGS VERTICAL CONTROL SURVEY MONUMENTS "TOWER 1" AND "TOWER 2". THE MONUMENT BRASS DISCS SHALL REMAIN GOVERNMENT PROPERTY AND DELIVERED TO THE CONTRACTING OFFICER. THE CONTRACTING OFFICER WILL FORWARD THE DISCS TO MR. TERRY RILEY (LANTDIV, PHONE 322-4286).

(I) REMOVE THE ø250 SANITARY PIPE BETWEEN SANITARY MANHOLES (5) AND (4), AND BETWEEN (4) AND (3). SEE SHEETS C-16 AND C-17 FOR NEW WORK.

## EROSION AND SEDIMENT CONTROL LEGEND

- (IP) INLET PROTECTION
- (SF) SILT FENCE
- (CE) CONSTRUCTION ENTRANCE (CONTRACTOR TO DETERMINE LOCATION)
- (CIP) CULVERT INLET PROTECTION
- (TS) TEMPORARY SEEDING
- (EM) SOIL STABILIZATION BLANKETS AND MATTING

SEE SHEET C-11 FOR EROSION AND SEDIMENT CONTROL NOTES

# SITE DEMOLITION PLAN (1 OF 2)

1 : 300

1:300 0 5 10 20 30m

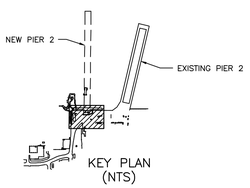


KEY PLAN (NTS)

REVISIONS

| SYM. | DESCRIPTION | DATE | APPROVED |
|---|---|---|---|

DESIGNED & ENGINEERED BY: LANTDIV NAVAL FACILITIES ENGINEERING COMMAND

SEAL

APPROVED

ACTIVITY - SATISFACTORY TO

DATE

APPROVED
FOR EFD FOR COMMANDER NAVFAC
1/25/99

DATE

| A/E | EFD |
|---|---|
| DESIGN | TAR |
| DRAWN | TAR |
| REVIEW | JSC |
| QC | |
| CHIEF ARCH./ ENGR. | |
| PROJECT MANAGER | DWB |
| FIRE PROTECTION | DWR |
| BRANCH MANAGER | |
| DESIGN DIRECTOR | |

DEPARTMENT OF THE NAVY
NAVAL FACILITIES ENGINEERING COMMAND
NORFOLK, VIRGINIA
NAVAL STATION ATLANTIC DIVISION NORFOLK, VIRGINIA
PIER 2 REPLACEMENT
SITE DEMOLITION PLAN (1 OF 2)

| | |
|---|---|
| CODE ID. NO. 80091 | SIZE D |
| SCALE: | 1:300 |
| EFD NO. | 493902 |
| STA. PROJ. NO. | P-355 |
| SPEC. NO. | 05-97-7041 |
| CONSTR. CONTR. NO. | N62470-97-B-7041 |
| NAVFAC DRAWING NO. | 4393902 |
| SHEET | 12 OF 240 |

C-10

FILENAME: 7041C010.DWG, PLOT SCALE: 1=1, SAVED ON 01/07/99 AT 12:25, XREFS: 7041CX01.DWG

DRAWFORM REVISION 27 JULY 98

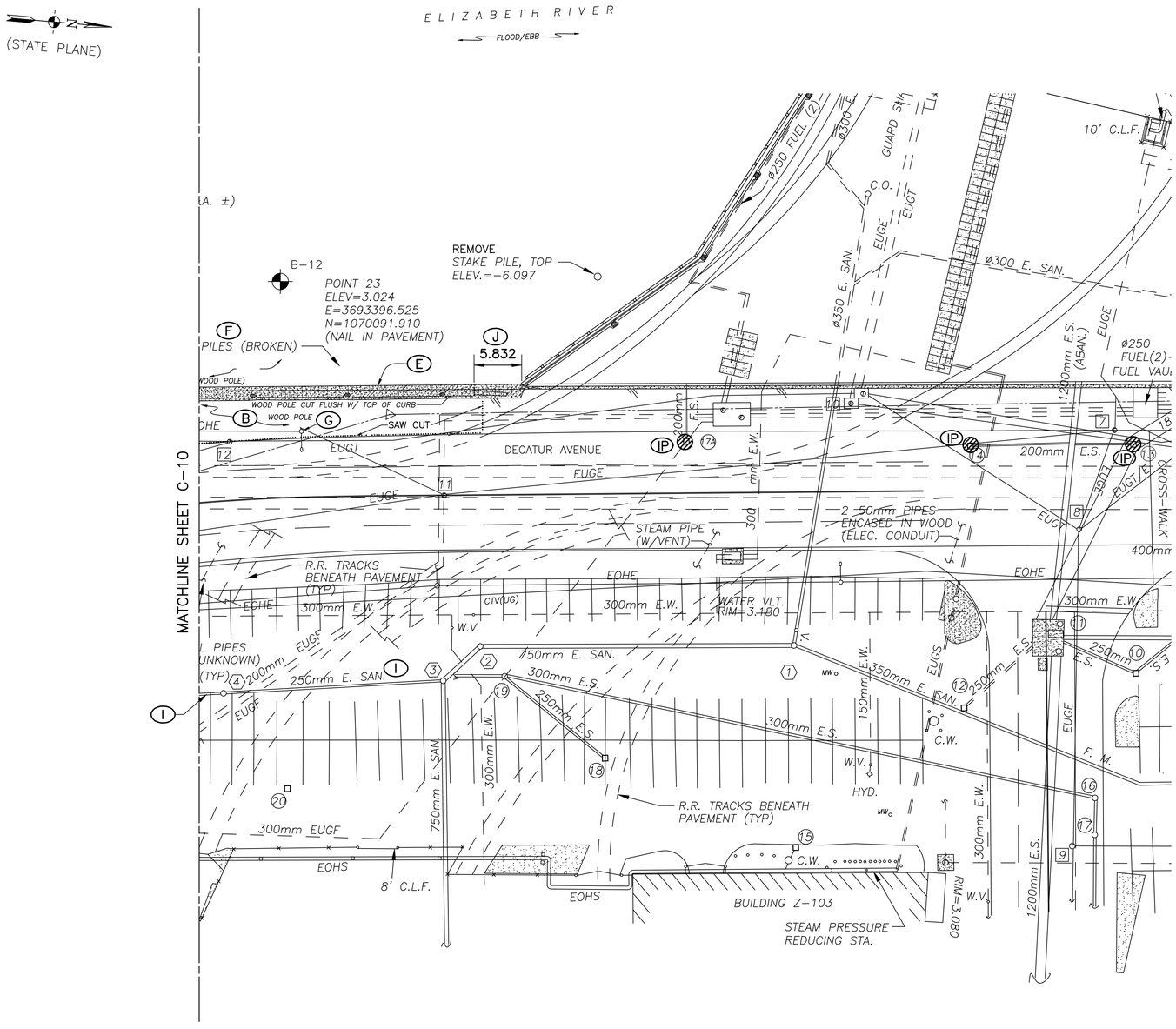


## GENERAL DEMOLITION NOTES

1. SEE SHEET C-10 FOR GENERAL DEMOLITION NOTES.

## SPECIFIC DEMOLITION NOTES

(B) REMOVE ALL PAVEMENTS, WALKS, UTILITY STRUCTURES, WOOD POLES, TIMBER FENDERS & PILES, RAILINGS, POSTS, FENCES, R.R. TRACKS, YARD HYDRANT, COOLING WELL, VEHICLE BUMPER GUARDS, AND ALL OTHER FEATURES SHOWN WITHIN THE LIMITS OF THE SAW CUT LINE. FOUNDATIONS AND UTILITY LINES MAY BE ABANDONED IN PLACE. UNDERGROUND UTILITY PIPES AND DUCTS MAY BE REMOVED AND PLUGGED AS NECESSARY TO INSTALL NEW WORK.

(E) SEE SHEET SE-3 FOR REMOVAL OF THE CONCRETE BULKHEAD CAP. REMOVE THE CONCRETE BULKHEAD AS REQUIRED TO INSTALL NEW WORK.

(F) REMOVE ALL TIMBER FENDERS AND PILES, INCLUDING TIMBERS THAT HAVE FALLEN INTO THE RIVER.

(G) WOOD POLES, NAVIGATIONAL AIDS AND LIGHTS ARE TO REMAIN ACTIVE.

(I) REMOVE THE Ø250 SANITARY PIPE BETWEEN SANITARY MANHOLES (5) AND (4), AND BETWEEN (4) AND (3). SEE SHEETS C-16 AND C-17 FOR NEW WORK.

(J) CONCRETE BULKHEAD CAP TO REMAIN.

## EROSION AND SEDIMENT CONTROL NOTES

1. DEVELOP AND IMPLEMENT AN EROSION AND SEDIMENT CONTROL PLAN IN ACCORDANCE WITH THE VIRGINIA EROSION AND SEDIMENT CONTROL HANDBOOK, THIRD EDITION, 1992. THE CONTRACT PLANS AND SPECIFICATIONS INDICATE MINIMUM EROSION CONTROL REQUIREMENTS AND SHALL BE SITE ADAPTED AND MODIFIED TO SUIT THE SEQUENCE OF CONSTRUCTION OPREATIONS.
2. PROVIDE TWO STONE CONSTRUCTION ENTRANCES IN ACCORDANCE WITH SECTION 3.02 OF THE VIRGINIA EROSION AND SEDIMENT CONTROL HANDBOOK, THIRD EDITION, 1992. THE CONTRACTOR SHALL DETERMINE THE LOCATIONS OF THE CONSTRUCTION ENTRANCES.
3. PROVIDE SILT FENCE IN ACCORDANCE WITH SECTION 3.05 OF THE VIRGINIA EROSION AND SEDIMENT CONTROL HANDBOOK, THIRD EDITION, 1992.
4. PROVIDE STORM DRAIN INLET PROTECTION IN ACCORDANCE WITH SECTION 3.07 OF THE VIRGINIA EROSION AND SEDIMENT CONTROL HANDBOOK, THIRD EDITION, 1992.
5. PROVIDE CULVERT INLET PROTECTION IN ACCORDANCE WITH SECTION 3.08 OF THE VIRGINIA EROSION AND SEDIMENT CONTROL HANDBOOK, THIRD EDITION, 1992.
6. PROVIDE TEMPORARY SEEDING IN ACCORDANCE WITH SECTION 3.31 OF THE VIRGINIA EROSION AND SEDIMENT CONTROL HANDBOOK, THIRD EDITION, 1992.
7. PROVIDE SOIL STABILIZATION BLANKETS AND MATTING IN ACCORDANCE WITH SECTION 3.36 OF THE VIRGINIA EROSION AND SEDIMENT CONTROL HANDBOOK, THIRD EDITION, 1992.

## EROSION AND SEDIMENT CONTROL LEGEND

- (IP) INLET PROTECTION
- (SF) SILT FENCE
- (CE) CONSTRUCTION ENTRANCE (CONTRACTOR TO DETERMINE LOCATION)
- (CIP) CULVERT INLET PROTECTION
- (TS) TEMPORARY SEEDING
- (BM) SOIL STABILIZATION BLANKETS AND MATTING

# SITE DEMOLITION PLAN (2 OF 2)

1 : 300

1:300 0 5 10 20 30m

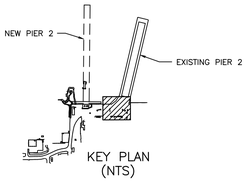


REVISIONS

| SYM. | DESCRIPTION | DATE | APPROVED |
|---|---|---|---|

DESIGNED & ENGINEERED BY: LANTDIV NAVAL FACILITIES ENGINEERING COMMAND

SEAL

APPROVED
ACTIVITY – SATISFACTORY TO
DATE
APPROVED
FOR EFD FOR COMMANDER NAVFAC
1/25/99
DATE

| A/E | EFD |
|---|---|
| DESIGN | TAR |
| DRAWN | TAR |
| REVIEW | JSC |
| QC | |
| CHIEF ARCH./ ENGR. | |
| PROJECT MANAGER | DWB |
| FIRE PROTECTION | DWR |
| BRANCH MANAGER | |
| DESIGN DIRECTOR | |

DEPARTMENT OF THE NAVY
NAVAL STATION
ATLANTIC DIVISION
NAVAL FACILITIES ENGINEERING COMMAND
NORFOLK, VIRGINIA
NAVAL STATION
NORFOLK, VIRGINIA
PIER 2 REPLACEMENT
SITE DEMOLITION PLAN (2 OF 2)

| | |
|---|---|
| CODE ID. NO. 80091 | SIZE D |
| SCALE: 1:300 | |
| EFD NO. 493903 | |
| STA. PROJ. NO. P-355 | |
| SPEC. NO. 05-97-7041 | |
| CONSTR. CONTR. NO. N62470-97-B-7041 | |
| NAVFAC DRAWING NO. 4393903 | |
| SHEET 13 OF 240 | |

C-11

FILENAME: 7041C011.DWG, PLOT SCALE: 1=1, SAVED ON 01/11/99 AT 08:40, XREFS: 7041CX01.DWG

DRAWFORM REVISION 27 JULY 98

8 7 6 5 4 3 2 1

D C B A

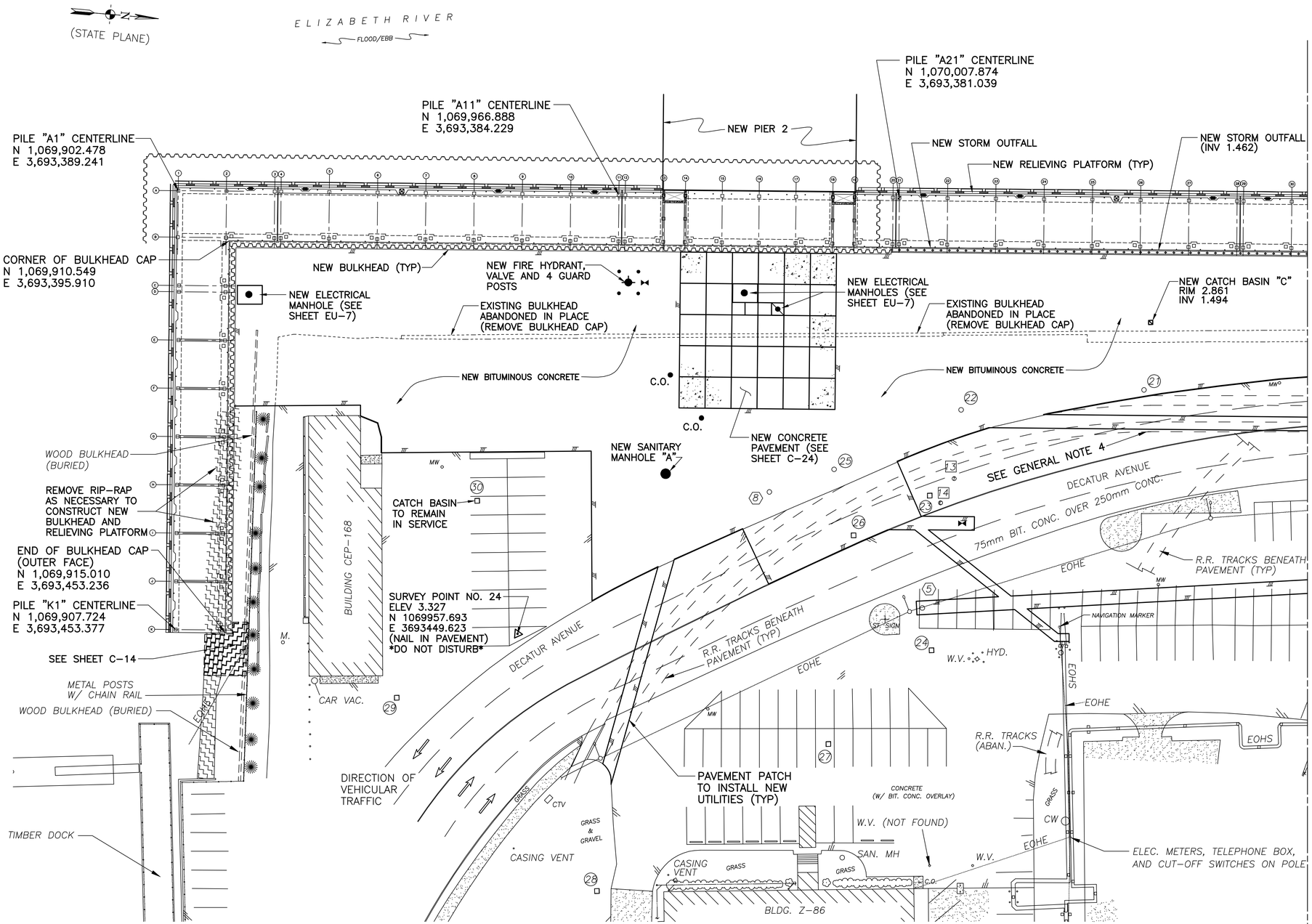


# NEW SITE LAYOUT PLAN (1 OF 2)

1 : 300

1:300 0 5 10 20 30m

## GENERAL NOTES

1. SEE SHEET C-23 FOR NEW PAVEMENT CROSS-SECTION DETAILS.
2. SEE SHEET C-16 FOR NEW CIVIL UTILITIES.
3. COORDINATE CONSTRUCTION OF NEW WATER, SANITARY, OWWO AND STORM DRAINAGE UTILITIES WITH CONSTRUCTION OF NEW MECHANICAL AND ELECTRICAL UTILITIES SHOWN ON SHEETS MU-2, EU-7 AND EU-8.
4. REMOVE ABANDONED RAILROAD TRACKS AS NECESSARY TO INSTALL NEW WORK. SEE GENERAL DEMOLITION NOTE 4(D) ON SHEET C-10 FOR BIDDING INFORMATION.
5. FOR SURVEY POINT COORDINATES SEE SHEET C-2. FOR ADDITIONAL NEW WORK COORDINATES SEE SHEET C-13.
6. THE CONTRACTOR SHALL STRIPE THE NEW BITUMINOUS CONCRETE PAVEMENT IN DECATUR AVENUE (I.E., LANE DIVIDERS, EDGE LINE, CENTERLINE, ETC.), AND WHERE PAVEMENT IS REMOVED AND REPLACED TO INSTALL NEW UTILITIES (I.E., PARKING SPACE LINES, ETC.). NEW STRIPPING SHALL MATCH EXISTING STRIPPING (I.E., COLOR, WIDTH, LENGTH, SINGLE LINE, DOUBLE LINE, ETC.). BASE BID ON 550 METERS OF 100MM WIDE, NON-REFLECTIVE STRIPPING.

## NEW PIER 2 COORDINATES

℄ WESTERN END OF LOWER LEVEL:
N 1,069,951.849
E 3,692,926.029

PIER PILE "80C":
N 1,069,951.907
E 3,692,926.777

PIER PILE "1C":
N 1,069,987.260
E 3,693,381.083

℄ EASTERN END OF LOWER LEVEL:
N 1,069,987.318
E 3,693,381.831

## NEW UTILITY STRUCTURE LOCATIONS

℄ NEW FIRE HYDRANT:
N 1,069,969.390
E 3,693,396.886

℄ NEW SANITARY MANHOLE "A":
N 1,069,977.281
E 3,693,424.344

℄ NEW CATCH BASIN "C":
N 1,070,046.169
E 3,693,396.033

℄ NEW CATCH BASIN "D":
N 1,070,084.483
E 3,693,392.365
(SHOWN ON SHEET C-13)

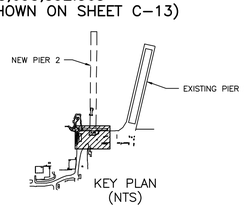


KEY PLAN
(NTS)

REVISIONS

| SYM. | DESCRIPTION | DATE | APPROVED |
|---|---|---|---|

DESIGNED & ENGINEERED BY: LANTDIV NAVAL FACILITIES ENGINEERING COMMAND

SEAL

APPROVED

ACTIVITY – SATISFACTORY TO

DATE

APPROVED
FOR EFD FOR COMMANDER NAVFAC
1/25/99

DATE

| A/E | EFD |
|---|---|
| DESIGN | TAR |
| DRAWN | TAR |
| REVIEW | JSC |
| QC | |
| CHIEF ARCH./ ENGR. | |
| PROJECT MANAGER | DWR |
| FIRE PROTECTION | DWR |
| BRANCH MANAGER | |
| DESIGN DIRECTOR | |

DEPARTMENT OF THE NAVY
NAVAL FACILITIES ENGINEERING COMMAND
NAVAL STATION ATLANTIC DIVISION NORFOLK, VIRGINIA
NAVAL STATION NORFOLK, VIRGINIA

PIER 2 REPLACEMENT

NEW SITE LAYOUT PLAN (1 OF 2)

| | |
|---|---|
| CODE ID. NO. 80091 | SIZE D |
| SCALE: | 1:300 |
| EFD NO. | 493904 |
| STA. PROJ. NO. | P-355 |
| SPEC. NO. | 05-97-7041 |
| CONSTR. CONTR. NO. | N62470-97-B-7041 |
| NAVFAC DRAWING NO. | 4393904 |
| SHEET | 14 OF 240 |

C-12

DRAWFORM REVISION 27 JULY 98

FILENAME: 7041C012.DWG, PLOT SCALE: 1=1, SAVED ON 01/07/99 AT 12:27, XREFS: NONE

8 7 6 5 4 3 2 1

D C B A

(STATE PLANE)

SURVEY POINT NO. 23
ELEV 3.024
N 1070091.910
E 3693396.525
(NAIL IN PAVEMENT)
THIS SURVEY POINT WILL BE DESTROYED DURING CONSTRUCTION. THE CONTRACTOR SHALL ESTABLISH A NEW SURVEY CONTROL POINT (23A) IN A LOCATION THAT WILL NOT BE AFFECTED BY CONSTRUCTION.

NEW UTILITY STRUCTURE LOCATION

℄ NEW CATCH BASIN "D":
N 1,070,084.483
E 3,693,392.365

ELIZABETH RIVER
FLOOD/EBB

PILE "A36" CENTERLINE
N 1,070,107.553
E 3,693,373.282

END OF BULKHEAD CAP
(OUTER FACE)
N 1,070,108.541
E 3,693,380.502

NEW RELIEVING PLATFORM

NEW BULKHEAD

NEW CATCH BASIN "D"
RIM 2.861
INV 1.609

SEE GENERAL NOTE 4

NEW BACKFILL TO GRADE LEVEL. DO NOT PAVE THIS AREA.

NEW TEMPORARY STEEL SHEET PILING (SEE SHEET SE-2)

EXISTING BULKHEAD ABANDONED IN PLACE (REMOVE CAP)

SURVEY POINT NO. 23

EXISTING PIER 2

C.O.

EX. WOOD FENDER SYS., TYP.

FUEL VAULT

CROSS WALK

MATCHLINE SHEET C-12

WATER VLT.
RIM=3.180

R.R. TRACKS BENEATH PAVEMENT (TYP)

EOHE

W.V.

V.

MW

C.W.

HYD.

EOHS

8' C.L.F.

BUILDING Z-103

STEAM PRESSURE REDUCING STA.

PAVEMENT PATCH TO INSTALL NEW UTILITIES (TYP)

GENERAL NOTES

1. SEE SHEET C-23 FOR NEW PAVEMENT CROSS-SECTION DETAILS.
2. SEE SHEET C-17 FOR NEW CIVIL UTILITIES.
3. COORDINATE CONSTRUCTION OF NEW WATER, SANITARY, OWWO AND STORM DRAINAGE UTILITIES WITH CONSTRUCTION OF NEW MECHANICAL AND ELECTRICAL UTILITIES SHOWN ON SHEETS MU-2, EU-7 AND EU-8.
4. SEE SHEET EU-8 FOR NEW ELECTRICAL MANHOLES, DUCTS AND SWITCH.

# NEW SITE LAYOUT PLAN (2 OF 2)

1 : 300

1:300 0 5 10 20 30m

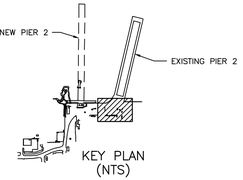

KEY PLAN (NTS)

REVISIONS

| SYM. | DESCRIPTION | DATE | APPROVED |
|---|---|---|---|

DESIGNED & ENGINEERED BY: LANTDIV NAVAL FACILITIES ENGINEERING COMMAND

SEAL

APPROVED
ACTIVITY - SATISFACTORY TO
DATE
APPROVED
FOR EFD FOR COMMANDER NAVFAC
1/25/99
DATE

| A/E | EFD |
|---|---|
| DESIGN | TAR |
| DRAWN | TAR |
| REVIEW | JSC |
| QC | |
| CHIEF ARCH./ ENGR. | |
| PROJECT MANAGER | DWB |
| FIRE PROTECTION | DWR |
| BRANCH MANAGER | |
| DESIGN DIRECTOR | |

DEPARTMENT OF THE NAVY
NAVAL STATION ATLANTIC DIVISION
NAVAL FACILITIES ENGINEERING COMMAND
NORFOLK, VIRGINIA

NAVAL STATION NORFOLK, VIRGINIA
**PIER 2 REPLACEMENT**
NEW SITE LAYOUT PLAN (2 OF 2)

| | |
|---|---|
| CODE ID. NO. 80091 | SIZE D |
| SCALE: 1:300 | |
| EFD NO. 493905 | |
| STA. PROJ. NO. P-355 | |
| SPEC. NO. 05-97-7041 | |
| CONSTR. CONTR. NO. N62470-97-B-7041 | |
| NAVFAC DRAWING NO. 4393905 | |
| SHEET 15 OF 240 | |

**C-13**

DRAWFORM REVISION 27 JULY 98

FILENAME: 7041C013.DWG, PLOT SCALE: 1=1, SAVED ON 01/07/99 AT 12:28, XREFS: NONE

(STATE PLANE)

ELIZABETH RIVER

FLOOD/EBB

NEW PIER 2

NEW STORM OUTFALL

NEW RELIEVING PLATFORM (TYP)

NEW STORM OUTFALL (INV 1.462)

NEW BULKHEAD (TYP)

EXISTING BULKHEAD ABANDONED IN PLACE (REMOVE BULKHEAD CAP)

NEW CATCH BASIN "C" RIM 2.861 INV 1.494

EXISTING 250mm OUTFALL ELEV.=1.311

NEW BITUMINOUS CONCRETE

RAISE RIM FROM 3.123 TO 3.334

NEW SANITARY MANHOLE "A" RIM 3.470

NEW CONCRETE PAVEMENT (SEE SHEET C-22)

MATCH RIM

RAISE RIM FROM 3.345 TO 3.470

WOOD BULKHEAD (BURIED)

REMOVE RIP-RAP AS NECESSARY TO CONSTRUCT NEW BULKHEAD AND RELIEVING PLATFORM

CATCH BASIN TO REMAIN IN SERVICE

SURVEY POINT NO. 24 ELEV 3.327

BUILDING CEP-168

RELOCATE EXISTING RIP-RAP TO CONTAIN NEW BACKFILL AND TO PROTECT END OF NEW BULKHEAD

METAL POSTS W/ CHAIN RAIL

WOOD BULKHEAD (BURIED)

TIMBER DOCK

CAR VAC.

DECATUR AVENUE

DIRECTION OF VEHICULAR TRAFFIC

75mm BIT. CONC. OVER 250mm CONC.

R.R. TRACKS BENEATH

R.R. TRACKS BENEATH PAVEMENT (TYP)

NAVIGATION MARKER

W.V. HYD.

EOHE

EOHS

R.R. TRACKS (ABAN.)

CONCRETE (W/ BIT. CONC. OVERLAY)

CASING VENT

W.V. (NOT FOUND)

SAN. MH

GRASS

GRASS & GRAVEL

CTV

ELEC. METERS, TELEPHONE BOX, AND CUT-OFF SWITCHES ON POLE

MATCHLINE SHEET C-15

# NEW SITE GRADING PLAN (1 OF 2)

1 : 300

1:300 0 5 10 20 30m

## GENERAL NOTES

1. SEE SHEET C-23 FOR NEW PAVEMENT CROSS-SECTION DETAILS.
2. SEE SHEET C-16 FOR NEW CIVIL UTILITIES.
3. COORDINATE CONSTRUCTION OF NEW WATER, SANITARY, OWWO AND STORM DRAINAGE UTILITIES WITH CONSTRUCTION OF NEW MECHANICAL AND ELECTRICAL UTILITIES SHOWN ON SHEETS MU-2, EU-7 AND EU-8.
4. REMOVE ABANDONED RAILROAD TRACKS AS NECESSARY TO INSTALL NEW WORK. SEE GENERAL DEMOLITION NOTE 4(D) ON SHEET C-10 FOR BIDDING INFORMATION.
5. TOP OF NEW CLEANOUT (CO) COVERS SHALL MATCH NEW GRADE.

NEW PIER 2

EXISTING PIER 2

KEY PLAN (NTS)

REVISIONS

| SYM. | DESCRIPTION | DATE | APPROVED |
|---|---|---|---|

DESIGNED & ENGINEERED BY: LANTDIV NAVAL FACILITIES ENGINEERING COMMAND

SEAL

APPROVED

ACTIVITY - SATISFACTORY TO

DATE

APPROVED

FOR CO FOR COMMANDER NAVFAC

1/25/99

DATE

| A/E | EFD |
|---|---|
| DESIGN | TAR |
| DRAWN | TAR |
| REVIEW | JSC |
| QC | |
| CHIEF ARCH./ ENGR. | |
| PROJECT MANAGER | DWB |
| FIRE PROTECTION | DWR |
| BRANCH MANAGER | |
| DESIGN DIRECTOR | |

DEPARTMENT OF THE NAVY NAVAL STATION ATLANTIC DIVISION NAVAL FACILITIES ENGINEERING COMMAND NORFOLK, VIRGINIA

NAVAL STATION NORFOLK, VIRGINIA

PIER 2 REPLACEMENT

NEW SITE GRADING PLAN (1 OF 2)

CODE ID. NO. 80091 SIZE D

SCALE: 1:300

EFD NO. 4939O6

STA. PROJ. NO. P-355

SPEC. NO. 05-97-7041

CONSTR. CONTR. NO. N62470-97-B-7041

NAVFAC DRAWING NO. 4393906

SHEET 16 OF 240

C-14

FILENAME: 7041C014.DWG, PLOT SCALE: 1=1, SAVED ON 01/07/99 AT 12:29, XREFS: NONE

DRAWFORM REVISION 27 JULY 98

(STATE PLANE)

ELIZABETH RIVER

FLOOD/EBB

NEW RELIEVING PLATFORM

NEW BULKHEAD

EXISTING BULKHEAD ABANDONED IN PLACE (REMOVE CAP)

NEW CATCH BASIN
RIM 2.861
INV 1.609

NEW BACKFILL TO GRADE LEVEL. DO NOT PAVE THIS AREA.

NEW TEMPORARY STEEL SHEET PILING

SURVEY POINT NO. 23

EXISTING PIER 2

C.O.

EX. WOOD FENDER SYS., TYP.

1800mm OUTFALL, INV. = −0.052

FUEL VAULT

CROSS WALK

DECATUR AVENUE

MATCHLINE SHEET C−14

R.R. TRACKS BENEATH PAVEMENT (TYP)

WATER VLT. RIM=3.180

EOHE

W.V.

MG (TYP)

MW

C.W.

HYD.

EOHS

8' C.L.F.

RIM=3.080

BUILDING Z−103

STEAM PRESSURE REDUCING STA.

## GENERAL NOTES

1. SEE SHEET C−23 FOR NEW PAVEMENT CROSS−SECTION DETAILS.
2. SEE SHEET C−17 FOR NEW CIVIL UTILITIES.
3. COORDINATE CONSTRUCTION OF NEW WATER, SANITARY, OWWO AND STORM DRAINAGE UTILITIES WITH CONSTRUCTION OF NEW MECHANICAL AND ELECTRICAL UTILITIES SHOWN ON SHEETS MU−2, EU−7 AND EU−8.
4. SEE SHEET C−13 FOR SURVEY POINT NO. 23 DATA.
5. NEW ELECTRICAL MANHOLES AND SWITCH ARE NOT SHOWN ON THIS SHEET FOR CLARITY. SEE SHEETS C−13 AND EU−8 FOR NEW ELECTRICAL WORK.

# NEW SITE GRADING PLAN (2 OF 2)

1 : 300

1:300 0 5 10 20 30m

NEW PIER 2

EXISTING PIER 2

KEY PLAN (NTS)

REVISIONS

| SYM. | DESCRIPTION | DATE | APPROVED |
|---|---|---|---|

DESIGNED & ENGINEERED BY: LANTDIV NAVAL FACILITIES ENGINEERING COMMAND

SEAL

APPROVED

ACTIVITY − SATISFACTORY TO

DATE

APPROVED
FOR EFD FOR COMMANDER NAVFAC
1/25/99

DATE

| A/E | EFD |
|---|---|
| DESIGN | TAR |
| DRAWN | TAR |
| REVIEW | JSC |
| QC | |
| CHIEF ARCH./ ENGR. | |
| PROJECT MANAGER | DWB |
| FIRE PROTECTION | DWR |
| BRANCH MANAGER | |
| DESIGN DIRECTOR | |

DEPARTMENT OF THE NAVY
NAVAL FACILITIES ENGINEERING COMMAND
NAVAL STATION **ATLANTIC DIVISION** NORFOLK, VIRGINIA

**PIER 2 REPLACEMENT**

NEW SITE GRADING PLAN (2 OF 2)

NORFOLK, VIRGINIA

| | |
|---|---|
| CODE ID. NO. 80091 | SIZE D |
| SCALE: 1:300 | |
| EFD NO. 493907 | |
| STA. PROJ. NO. P−355 | |
| SPEC. NO. 05−97−7041 | |
| CONSTR. CONTR. NO. N62470−97−B−7041 | |
| NAVFAC DRAWING NO. 4393907 | |
| SHEET 17 OF 240 | |

**C−15**

DRAWFORM REVISION 27 JULY 98

FILENAME: 7041C015.DWG, PLOT SCALE: 1=1, SAVED ON 01/07/99 AT 12:30, XREFS: NONE

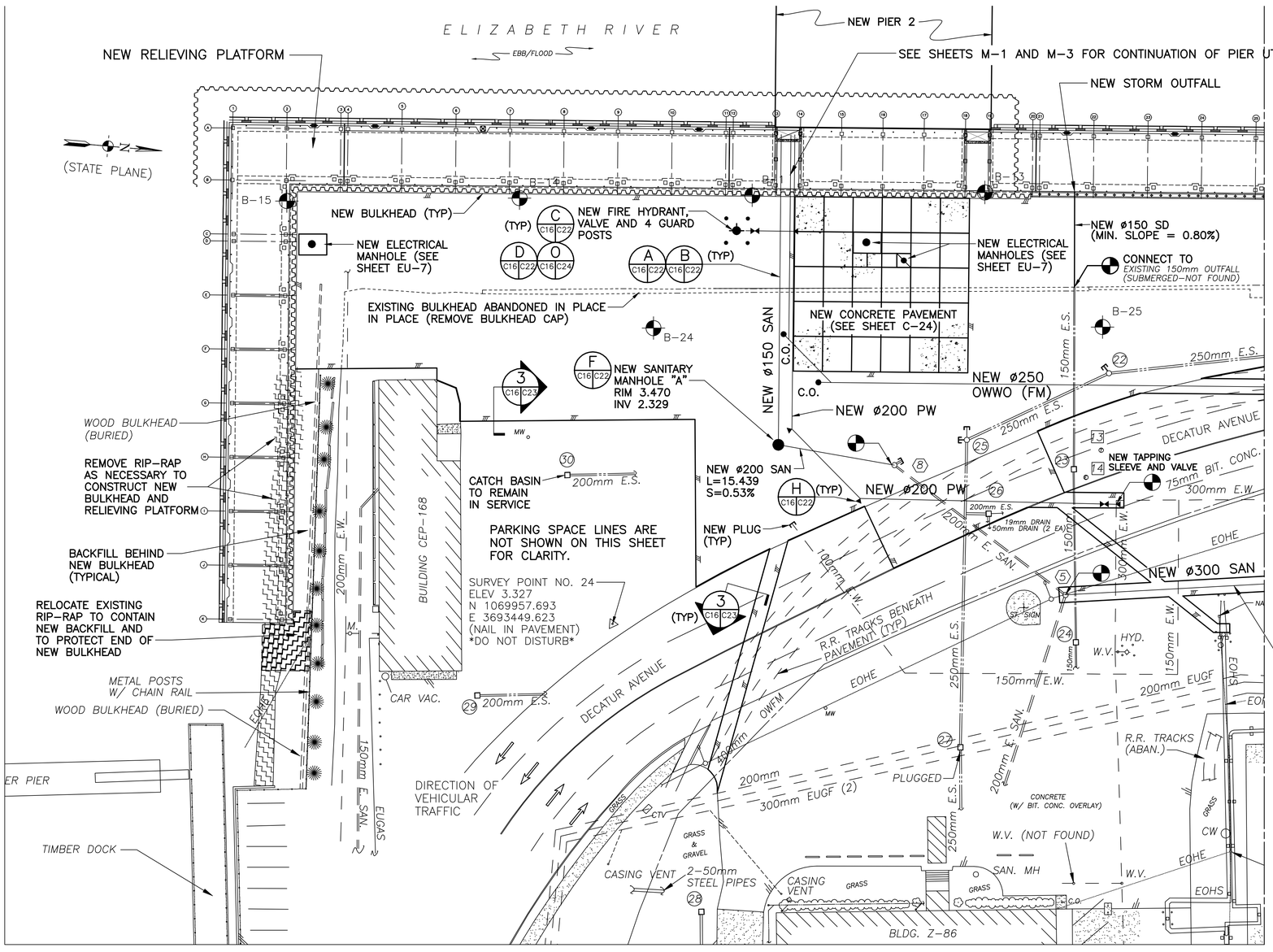


## GENERAL NOTES

1. REMOVE EXISTING PAVEMENT TO INSTALL NEW UNDERGROUND UTILITIES. SEE SHEET C-10 FOR DESCRIPTION OF EXISTING PAVEMENT THICKNESS. SEE DETAILS ON SHEET C-23 FOR NEW PAVEMENT PATCH DETAILS.
2. GROUNDWATER WILL BE ENCOUNTERED DURING CONSTRUCTION OF NEW UTILITIES. SEE THE BORING LOGS ON SHEETS B-1 THROUGH B-11 FOR APPROXIMATE GROUNDWATER ELEVATIONS. THE CONTRACTOR IS ADVISED THAT SINCE THE NEW WORK AREAS ARE WITHIN 42 METERS OF THE EXISTING BULKHEAD, EXTENSIVE DEWATERING WILL BE REQUIRED BELOW ACTUAL GROUND WATER AND TIDE ELEVATION. REFER TO THE SPECEFICATIONS FOR SPECFIC DEWATERING REQUIREMENTS.
3. SEE DETAILS A/C16-C22 AND B/C16-C22 FOR TRENCH AND PIPE BEDDING REQUIREMENTS.
4. NEW MANHOLES AND CONNECTIONS TO EXISTING MANHOLES ARE TO BE CONSTRUCTED TO PREVENT GROUNDWATER INFILTRATION.
5. SEE SHEETS C-25 AND C-26 FOR NEW UTILITY PROFILES.
6. INVERTS OF THE NEW ø250 SAN SHALL MATCH EXISTING INVERTS AT MANHOLES ⑤, ④, AND ③.

REMOVE EXISTING ø250 SANITARY SEWER PIPE BETWEEN SANITARY MANHOLES ⑤ AND ④, AND BETWEEN ④ AND ③. INSTALL NEW ø300 SANITARY SEWER PIPE BETWEEN THESE MANHOLES. PROVIDE TEMPORARY SEWAGE BYPASS PUMPS AND HOSES BETWEEN SANITARY MANHOLES ⑤, ④, AND ③.

# NEW SITE UTILITY PLAN (1 OF 2)

1 : 300

1:300 0 5 10 20 30m

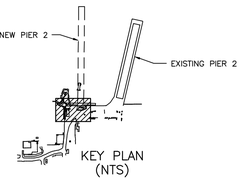


REVISIONS

| SYM | DESCRIPTION | DATE | APPROVED |
|---|---|---|---|

DESIGNED & ENGINEERED BY: LANTDIV NAVAL FACILITIES ENGINEERING COMMAND

SEAL

APPROVED

ACTIVITY - SATISFACTORY TO

DATE

APPROVED
FOR EFD FOR COMMANDER NAVFAC
1/25/99

DATE

| A/E | EFD |
|---|---|
| DESIGN | TAR |
| DRAWN | TAR |
| REVIEW | JSC |
| QC | |
| CHIEF ARCH./ ENGR. | |
| PROJECT MANAGER | DWB |
| FIRE PROTECTION | DWR |
| BRANCH MANAGER | |
| DESIGN DIRECTOR | |

DEPARTMENT OF THE NAVY
NAVAL FACILITIES ENGINEERING COMMAND
NAVAL STATION ATLANTIC DIVISION NORFOLK, VIRGINIA
NAVAL STATION NORFOLK, VIRGINIA
PIER 2 REPLACEMENT
NEW SITE UTILITY PLAN (1 OF 2)

| | |
|---|---|
| CODE ID. NO. 80091 | SIZE D |
| SCALE: 1:300 | |
| EFD NO. 493908 | |
| STA. PROJ. NO. P-355 | |
| SPEC. NO. 05-97-7041 | |
| CONSTR. CONTR. NO. N62470-97-B-7041 | |
| NAVFAC DRAWING NO. 4393908 | |
| SHEET 18 OF 240 | |

C-16

DRAWFORM REVISION 27 JULY 98

FILENAME: 7041C016.DWG, PLOT SCALE: 1=1, SAVED ON 01/07/99 AT 12:31, XREFS: NONE

8 7 6 5 4 3 2 1

D C B A

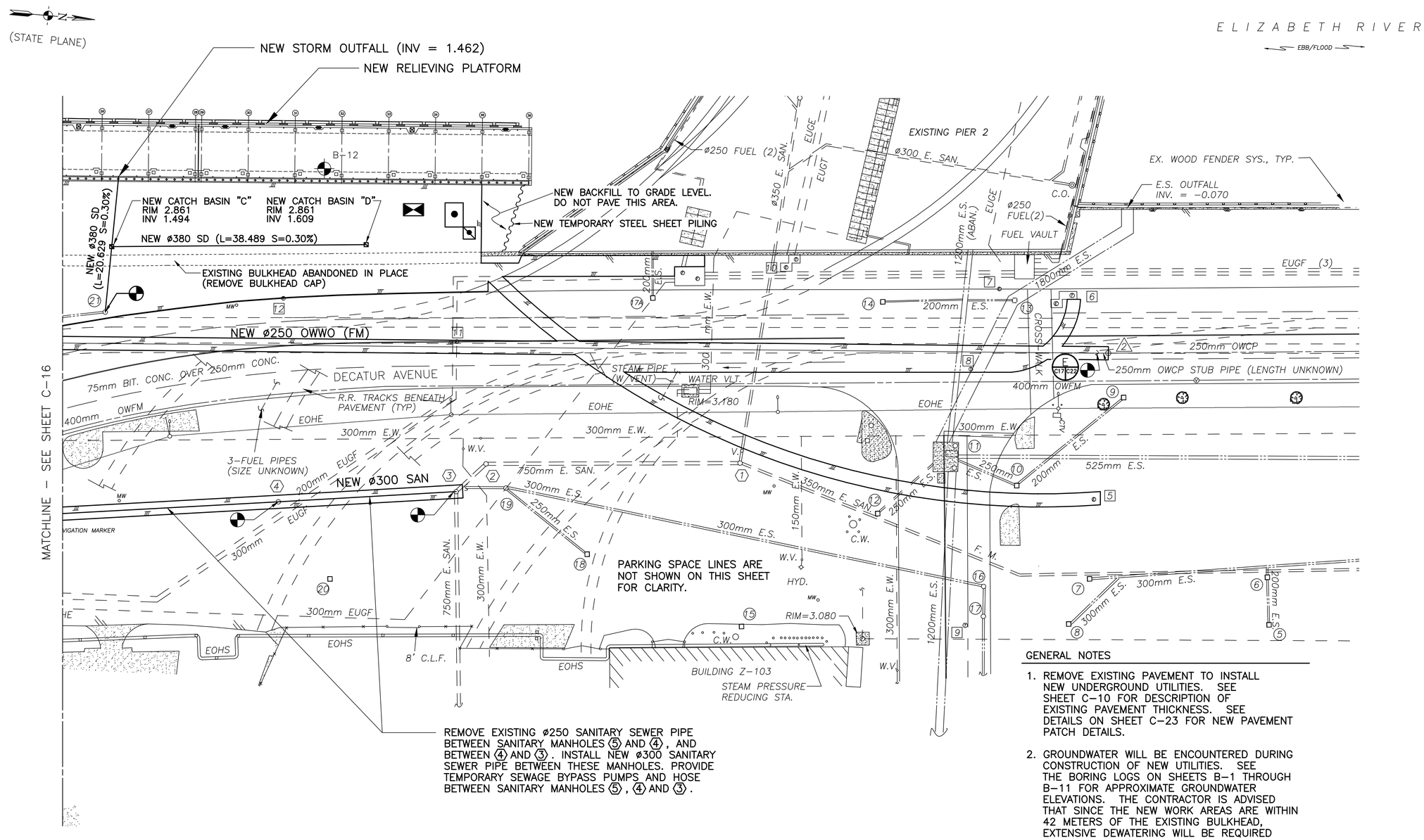


# NEW SITE UTILITY PLAN (2 OF 2)

1 : 300

1:300 0 5 10 20 30m

## GENERAL NOTES

1. REMOVE EXISTING PAVEMENT TO INSTALL NEW UNDERGROUND UTILITIES. SEE SHEET C-10 FOR DESCRIPTION OF EXISTING PAVEMENT THICKNESS. SEE DETAILS ON SHEET C-23 FOR NEW PAVEMENT PATCH DETAILS.
2. GROUNDWATER WILL BE ENCOUNTERED DURING CONSTRUCTION OF NEW UTILITIES. SEE THE BORING LOGS ON SHEETS B-1 THROUGH B-11 FOR APPROXIMATE GROUNDWATER ELEVATIONS. THE CONTRACTOR IS ADVISED THAT SINCE THE NEW WORK AREAS ARE WITHIN 42 METERS OF THE EXISTING BULKHEAD, EXTENSIVE DEWATERING WILL BE REQUIRED BELOW ACTUAL GROUND WATER AND TIDE ELEVATION. REFER TO THE SPECEFICATIONS FOR SPECFIC DEWATERING REQUIREMENTS.
3. SEE DETAILS A/C16-C22 AND B/C16-C22 FOR TRENCH AND PIPE BEDDING REQUIREMENTS.
4. NEW MANHOLES AND CONNECTIONS TO EXISTING MANHOLES ARE TO BE CONSTRUCTED TO PREVENT GROUNDWATER INFILTRATION.
5. SEE SHEETS C-25 AND C-26 FOR NEW UTILITY PROFILES.
6. INVERTS OF THE NEW ø250 SAN SHALL MATCH EXISTING INVERTS AT MANHOLES 5, 4, AND 3.

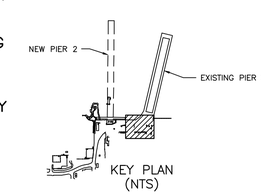


KEY PLAN (NTS)

REVISIONS

| SYM. | DESCRIPTION | DATE | APPROVED |
|---|---|---|---|

DESIGNED & ENGINEERED BY: LANTDIV NAVAL FACILITIES ENGINEERING COMMAND

SEAL

APPROVED

ACTIVITY - SATISFACTORY TO

DATE

APPROVED

FOR EFD FOR COMMANDER NAVFAC

1/25/99

DATE

A/E EFD

DESIGN TAR

DRAWN TAR

REVIEW JSC

QC

CHIEF ARCH./ ENGR.

PROJECT MANAGER DWB

FIRE PROTECTION DWR

BRANCH MANAGER

DESIGN DIRECTOR

DEPARTMENT OF THE NAVY

NAVAL FACILITIES ENGINEERING COMMAND

NAVAL STATION ATLANTIC DIVISION NORFOLK, VIRGINIA

NAVAL STATION NORFOLK, VIRGINIA

PIER 2 REPLACEMENT

NEW SITE UTILITY PLAN (2 OF 2)

CODE ID. NO. 80091 SIZE D

SCALE: 1:300

EFD NO. 493909

STA. PROJ. NO. P-355

SPEC. NO. 05-97-7041

CONSTR. CONTR. NO. N62470-97-B-7041

NAVFAC DRAWING NO. 4393909

SHEET 19 OF 240

C-17

FILENAME: 7041C017.DWG, PLOT SCALE: 1=1, SAVED ON 01/07/99 AT 12:32, XREFS: NONE

DRAWFORM REVISION 27 JULY 98

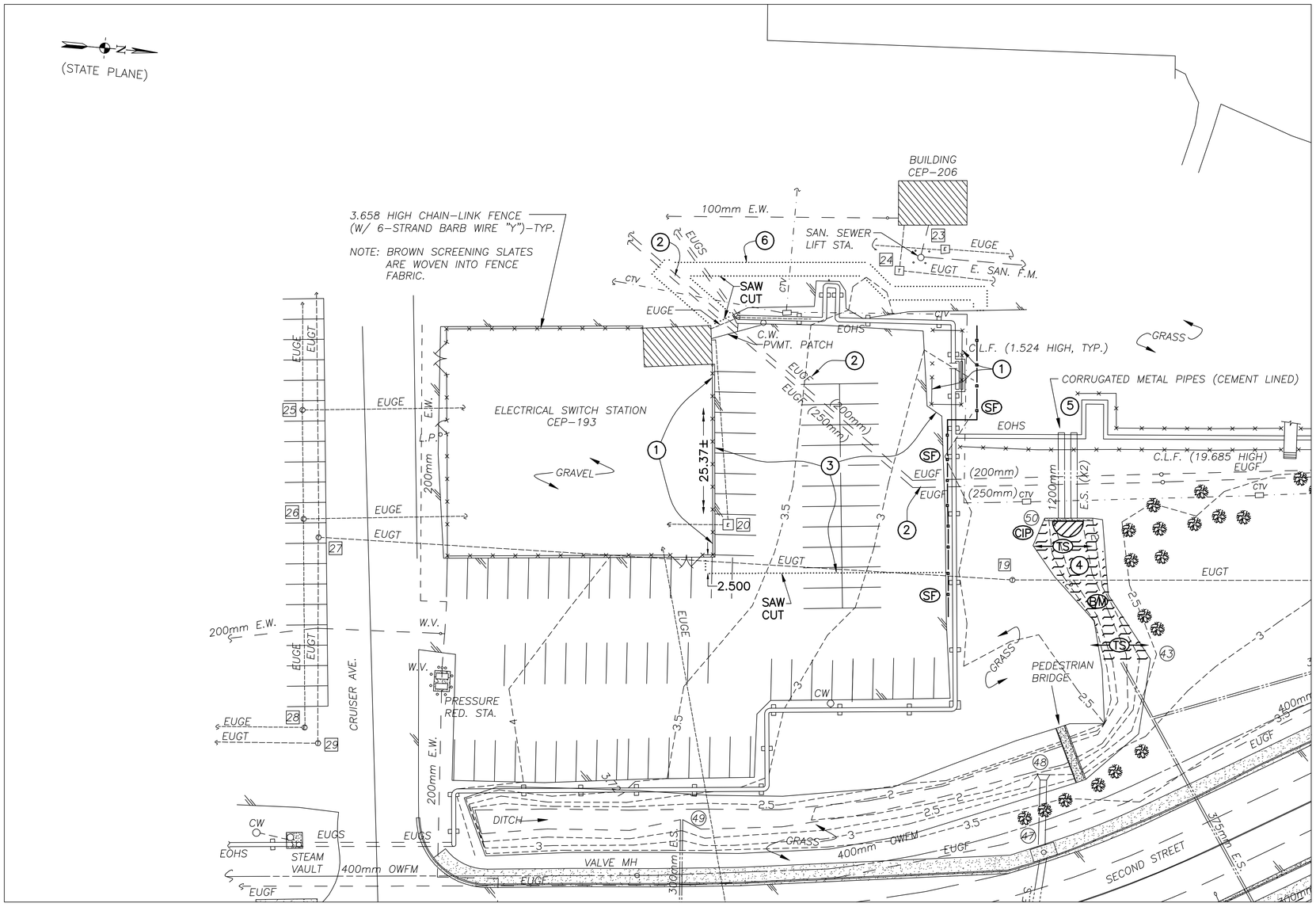


## DEMOLITION NOTES

1. REMOVE CHAINLINK FENCE, POSTS AND FOOTINGS.
2. REMOVE UNDERGROUND FUEL LINES. SEE SHEETS MU-3 AND MU-4.
3. REMOVE BITUMINOUS CONCRETE PAVEMENT. PAVEMENT MATERIAL THAT IS REMOVED MAY BE CRUSHED AND USED FOR SUBBASE MATERIAL. FOR BIDDING PURPOSES, THIS PAVEMENT IS CONSIDERED TO BE 75mm THICK BITUMINOUS CONCRETE, OVER 300mm THICK STONE BASE.
4. REMOVE ALL DIRT, DEBRIS, SILTED MATERIAL AND REGRADE THE EXIST. DITCH FROM THE PIPE INVERTS AT STRUCTURE (50) TO THE INVERT AT OUTFALL (43). SEED THE DISTURBED AREAS AND LINE THE SIDE SLOPES AND DITCH BOTTOM WITH EROSION AND SEDIMENT CONTROL MATTING.
5. REMOVE ALL DEBRIS, BUSHES,VEGETATION AND SEDIMENT AT THE CULVERT OUTFALLS (85SM). FOR BIDDING PURPOSES, CONSIDER THE SEDIMENT TO BE 1000mm DEEP. SEED THE DISTURBED AREAS AND LINE THE SIDE SLOPES AND DITCH BOTTOM WITH EROSION AND SEDIMENT CONTROL MATTING.
6. REMOVE AND REPLACE BITUMINOUS CONCRETE PAVEMENT TO INSTALL NEW FUEL LINES. SEE SHEETS MU-3 AND MU-4 FOR FUEL LINE DETAILS. SEE PAVEMENT PATCH DETAIL ON SHEET C-24.

## DEMOLITION LEGEND... THIS SHEET

CLEAN DITCH. SEE NOTE (4) ABOVE.

## EROSION AND SEDIMENT CONTROL LEGEND

- (IP) INLET PROTECTION
- (SF) SILT FENCE
- (CE) CONSTRUCTION ENTRANCE (CONTRACTOR TO DETERMINE LOCATION)
- (CIP) CULVERT INLET PROTECTION
- (TS) TEMPORARY SEEDING
- (EM) SOIL STABILIZATION BLANKETS AND MATTING

SEE SHEET C-11 FOR EROSION AND SEDIMENT CONTROL NOTES.

# EXPAND SUBSTATION - DEMOLITION PLAN

1 : 300

1:300 0 5 10 20 30m

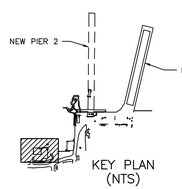


REVISIONS

| NO. | DESCRIPTION | DATE | APPROVED |
|---|---|---|---|

DESIGNED & ENGINEERED BY: LANTDIV NAVAL FACILITIES ENGINEERING COMMAND

SEAL

APPROVED
ACTIVITY - SATISFACTORY TO
DATE
APPROVED
FOR EFD FOR COMMANDER NAVFAC
1/25/99
DATE

| A/E | EFD |
|---|---|
| DESIGN | TAR |
| DRAWN | TAR |
| REVIEW | JSC |
| QC | |
| CHIEF ARCH./ ENGR. | |
| PROJECT MANAGER | DWB |
| FIRE PROTECTION | DWR |
| BRANCH MANAGER | |
| DESIGN DIRECTOR | |

DEPARTMENT OF THE NAVY
NAVAL FACILITIES ENGINEERING COMMAND
ATLANTIC DIVISION
NAVAL STATION NORFOLK, VIRGINIA
PIER 2 REPLACEMENT
EXPAND SUBSTATION - DEMOLITION PLAN

| | |
|---|---|
| CODE ID. NO. 80091 | SIZE D |
| SCALE: 1:300 | |
| EFD NO. 493910 | |
| STA. PROJ. NO. P-355 | |
| SPEC. NO. 05-97-7041 | |
| CONSTR. CONTR. NO. N62470-97-B-7041 | |
| NAVFAC DRAWING NO. 4393910 | |
| SHEET 20 OF 240 | |

C-18

DRAWFORM REVISION 27 JULY 98

FILENAME: 7041C018.DWG; PLOT SCALE: 1=1, SAVED ON 01/07/99 AT 12:33, XREFS: NONE

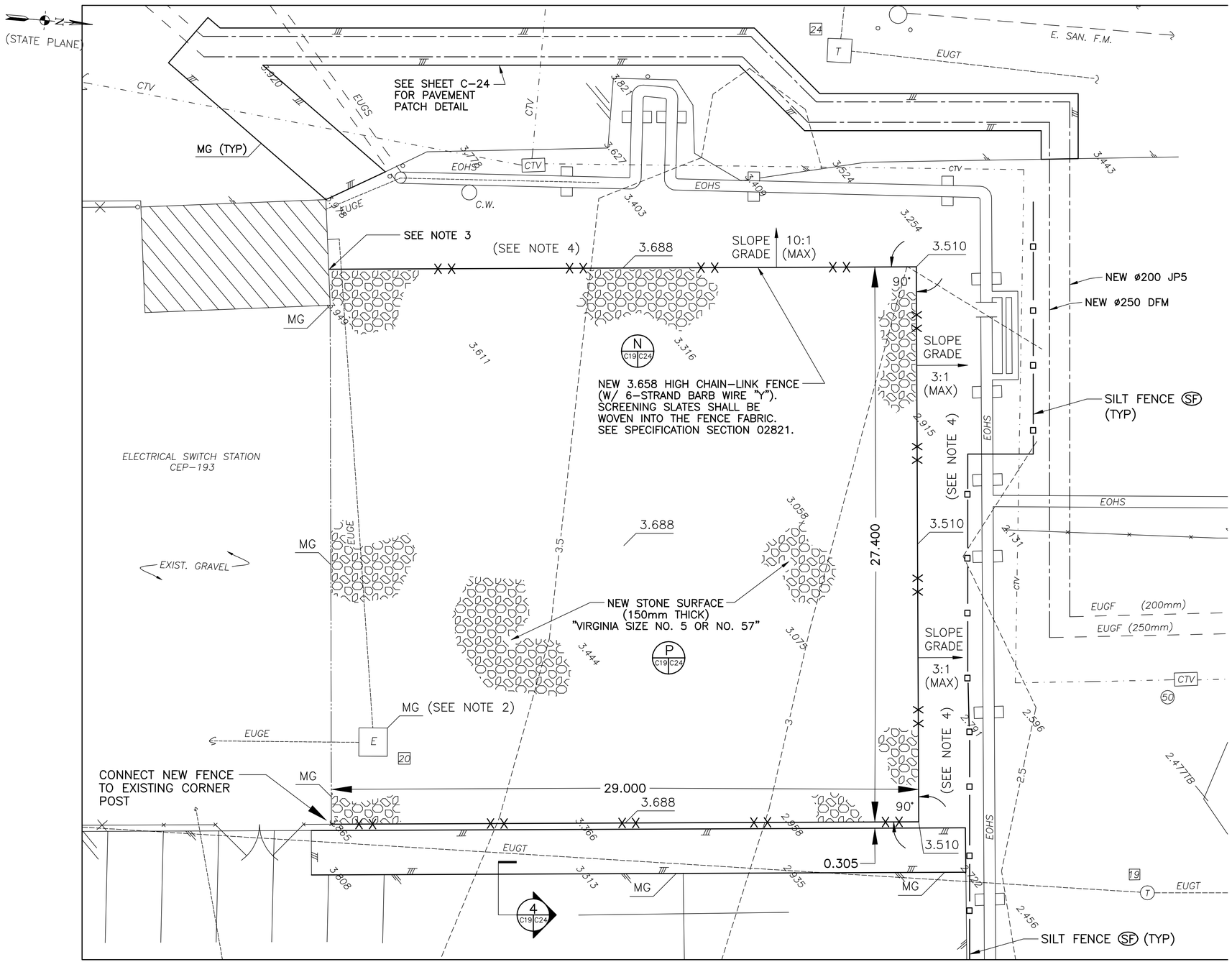


# EXPAND SUBSTATION – NEW WORK PLAN

1:100 0 1 5 10m

GENERAL NOTES

1. SEE SHEET C-2 FOR NEAREST BENCHMARKS.
2. THE NEW GRAVEL SURFACE SHALL MATCH THE TOP OF ELECTRICAL MANHOLE 20 . DO NOT DAMAGE THE TOP OF THIS MANHOLE AND REUSE THE EXISTING COVER.
3. THE MAXIMUM GAP BETWEEN THE EXISTING BUILDING WALL AND NEW FENCE END POST SHALL NOT EXCEED 50MM.
4. ESTABLISH NEW TURF ALONG THE NORTHERN AND WESTERN SIDES OF THE NEW EXPANDED SUBSTATION IN ACCORDANCE WITH SPECIFICATION SECTION 01561 (EROSION AND SEDIMENT CONTROL).

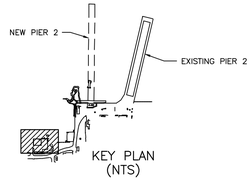


KEY PLAN (NTS)

REVISIONS

| SYM. | DESCRIPTION | DATE | APPROVED |
|---|---|---|---|

DESIGNED & ENGINEERED BY: LANTDIV NAVAL FACILITIES ENGINEERING COMMAND

SEAL

APPROVED
ACTIVITY – SATISFACTORY TO
DATE
APPROVED
FOR EFD FOR COMMANDER NAVFAC
1/25/99
DATE

| A/E | EFD |
|---|---|
| DESIGN | TAR |
| DRAWN | TAR |
| REVIEW | JSC |
| QC | |
| CHIEF ARCH./ ENGR. | |
| PROJECT MANAGER | DWB |
| FIRE PROTECTION | DWR |
| BRANCH MANAGER | |
| DESIGN DIRECTOR | |

DEPARTMENT OF THE NAVY
NAVAL STATION
ATLANTIC DIVISION
NAVAL FACILITIES ENGINEERING COMMAND
NORFOLK, VIRGINIA

PIER 2 REPLACEMENT

EXPAND SUBSTATION – NEW WORK PLAN

| | |
|---|---|
| CODE ID. NO. 80091 | SIZE D |
| SCALE: 1:100 | |
| EFD NO. 49391 | |
| STA. PROJ. NO. P-355 | |
| SPEC. NO. 05-97-7041 | |
| CONSTR. CONTR. NO. N62470-97-B-7041 | |
| NAVFAC DRAWING NO. 439391 | |
| SHEET 21 OF 240 | |

C-19

DRAWFORM REVISION 27 JULY 98

FILENAME: 7041C019.DWG, PLOT SCALE: 1=1, SAVED ON 01/07/99 AT 12:34, XREFS: NONE

8 7 6 5 4 3 2 1

D C B A

(STATE PLANE)

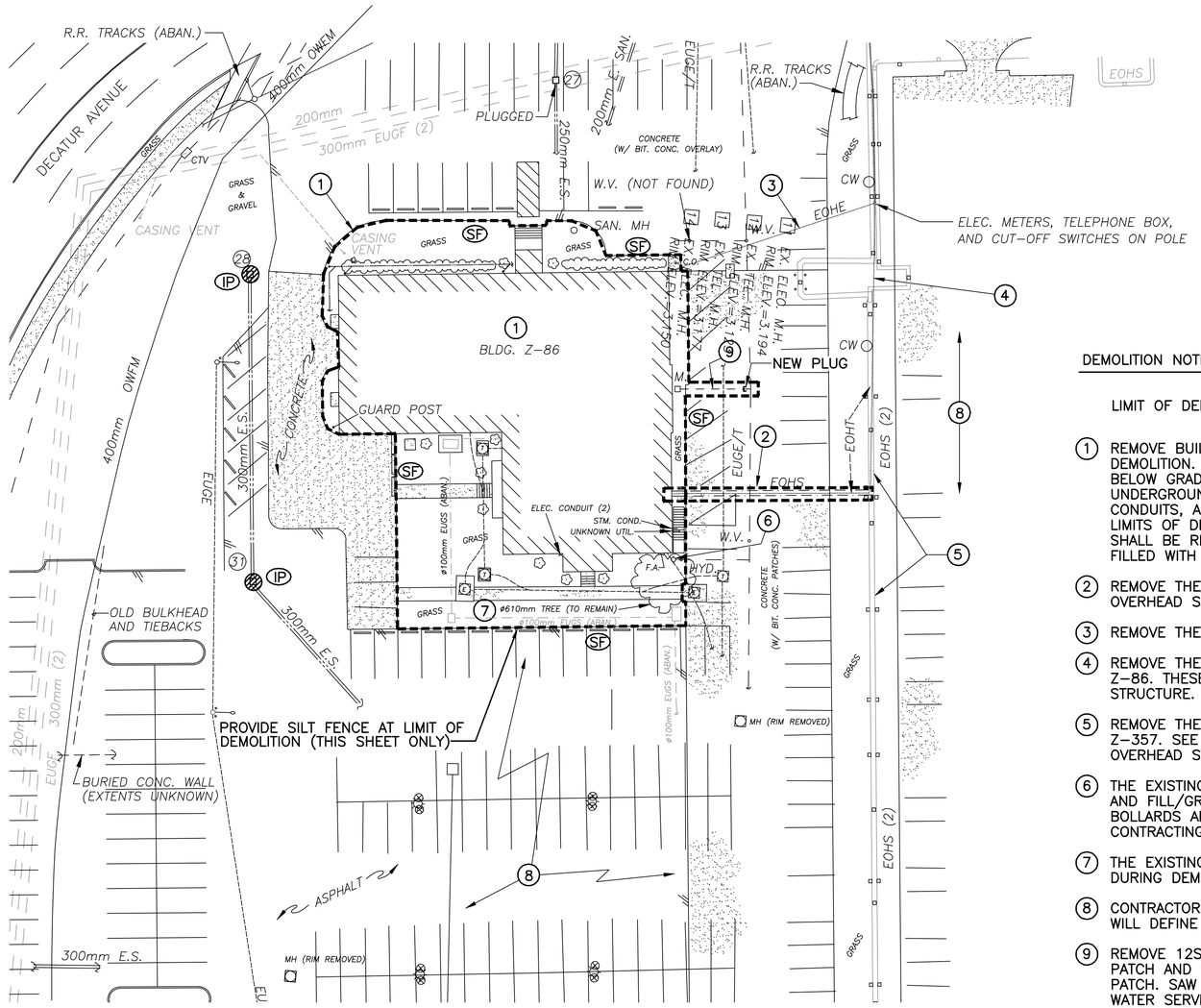


EROSION AND SEDIMENT CONTROL LEGEND

- (IP) INLET PROTECTION
- (SF) SILT FENCE
- (CE) CONSTRUCTION ENTRANCE
- (CIP) CULVERT INLET PROTECTION
- (TS) TEMPORARY SEEDING
- (BM) SOIL STABILIZATION BLANKETS AND MATTING

SEE SHEET C-11 FOR EROSION AND SEDIMENT CONTROL NOTES

# Z-86 DEMOLITION SITE PLAN

1 : 300

1:300 0 5 10 20 30m

## GENERAL NOTES

1. ALL EXCAVATIONS, TRENCHES AND UNPAVED AREAS WITHIN THE LIMITS-OF-DEMOLITION SHALL BE BACKFILLED IN ACCORDANCE WITH SPECIFICATION SECTION 02315 ("EXCAVATION AND FILL"). NEW BACKFILL AND FILL MATERIAL SHALL BE COMPACTED TO 95% ASTM D698. THE FINAL SURFACING OVER THESE AREAS SHALL CONSIST OF NEW STONE BASE COURSE MATERIAL (200MM THICK) IN ACCORDANCE WITH SPECIFICATION SECTION 02741 ("BITUMINOUS CONCRETE PAVEMENT"). THE FINAL STONE SURFACE SHALL BE CROWNED TO PROVIDE POSITIVE DRAINAGE ACROSS THE "LIMITS-OF-DEMOLITION" SITE.
2. SEE THE DEMOLITION NOTES (THIS SHEET) FOR ADDITIONAL SPECIFIC REQUIREMENTS.

## DEMOLITION NOTES

LIMIT OF DEMOLITION SYMBOL (TYPICAL THIS SHEET): ----------

(1) REMOVE BUILDING Z-86 INCLUDING ALL ITEMS SHOW WITHIN THE LIMITS OF DEMOLITION. REMOVE THE BUILDING FOOTING(S) A MINIMUM OF ONE METER BELOW GRADE, UNLESS OTHERWISE SHOWN ON SHEET DS-7. ABANDON ALL UNDERGROUND UTILITIES IN-PLACE. PLUG ALL ABANDONED UTILITY PIPES, CONDUITS, AND DUCTS. ALL MANHOLE AND HANDHOLE COVERS (WITHIN THE LIMITS OF DEMOLITION) SHALL BE REMOVED. THESE MANHOLES AND HANDHOLES SHALL BE REMOVED TO ONE METER BELOW GRADE, AND THE STRUCTURE FILLED WITH SELECT FILL MATERIAL.

(2) REMOVE THE OVERHEAD STEAMLINE TO BUILDING Z-86, INCLUDING THE OVERHEAD SUPPORT AND COLUMNS.

(3) REMOVE THE OVERHEAD POWER TO BUILDING Z-86.

(4) REMOVE THE OVERHEAD TELEPHONE/COMMUNICATIONS LINE TO BUILDING Z-86. THESE LINES ARE SUPPORTED ON THE OVERHEAD STEAM SUPPORT STRUCTURE.

(5) REMOVE THE OVERHEAD STEAM LINE THAT SERVES BUILDINGS Z-85 AND Z-357. SEE SHEET DM-1 FOR ADDITIONAL INFORMATION. THE LARGER OVERHEAD STEAM LINE IS TO REMAIN IN SERVICE.

(6) THE EXISTING FIRE HYDRANT IS TO REMAIN. AFTER ALL DEMOLITION AND FILL/GRAVEL HAS BEEN COMPLETED, INSTALL FOUR (4) BOLLARDS AROUND THE FIRE HYDRANT AS DIRECTED BY THE CONTRACTING OFFICER.

(7) THE EXISTING TREE IS TO REMAIN AND BE PROTECTED FROM DAMAGE DURING DEMOLITION.

(8) CONTRACTOR'S STORAGE/LAYDOWN AREA. THE CONTRACTING OFFICER WILL DEFINE EXACT LIMITS OF THESE AREAS.

(9) REMOVE 12SM (BY 200MM THICK) OF UNREINFORCED CONCRETE PAVEMENT PATCH AND 50SM (BY 75MM THICK) OF BITUMINOUS CONCRETE PAVEMENT PATCH. SAW CUTTING THIS PAVEMENT IS NOT REQUIRED. REMOVE THE WATER SERVICE PIPE TO BUILDING Z-86. THE CONTRACTOR SHALL FIELD VERIFY THE SIZE OF THE WATER SERVICE PIPE AND PLUG THE PIPE AS INDICATED. REMOVE THE WATER METER, CONCRETE METER BOX AND CONCRETE PAVEMENT AROUND THE METER BOX. THE WATER METER SHALL REMAIN GOVERNMENT PROPERTY. BACKFILL THE TRENCH/EXCAVATIONS AS SPECIFIED IN GENERAL NOTE 1.

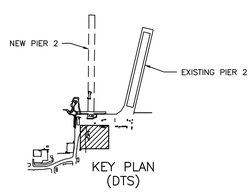


KEY PLAN (DTS)

REVISIONS

| SYM. | DESCRIPTION | DATE | APPROVED |
|---|---|---|---|

DESIGNED & ENGINEERED BY: LANTDIV NAVAL FACILITIES ENGINEERING COMMAND

SEAL

APPROVED

ACTIVITY - SATISFACTORY TO

DATE

APPROVED
FOR EFD FOR COMMANDER NAVFAC
1/25/99

DATE

| A/E | EFD |
|---|---|
| DESIGN | TAR |
| DRAWN | TAR |
| REVIEW | JSC |
| QC | |
| CHIEF ARCH./ ENGR. | |
| PROJECT MANAGER | DWB |
| FIRE PROTECTION | DWR |
| BRANCH MANAGER | |
| DESIGN DIRECTOR | |

DEPARTMENT OF THE NAVY
NAVAL STATION
ATLANTIC DIVISION
NAVAL FACILITIES ENGINEERING COMMAND
NORFOLK, VIRGINIA

NAVAL STATION NORFOLK, VIRGINIA

PIER 2 REPLACEMENT

Z-86 DEMOLITION SITE PLAN

| | |
|---|---|
| CODE ID. NO. 80091 | SIZE D |
| SCALE: 1:300 | |
| EFD NO. 493912 | |
| STA. PROJ. NO. P-355 | |
| SPEC. NO. 05-97-7041 | |
| CONSTR. CONTR. NO. N62470-97-B-7041 | |
| NAVFAC DRAWING NO. 4393912 | |
| SHEET 22 OF 240 | |

C-20

DRAWFORM REVISION 27 JULY 98

FILENAME: 7041C020.DWG, PLOT SCALE: 1=1, SAVED ON 01/07/99 AT 12:34, XREFS: NONE

8 7 6 5 4 3 2 1

D C B A

## STORM DRAINAGE STRUCTURES

(A) EX. CATCH BASIN
RIM ELEV.=2.999
INV. ELEV.=2.305

(B) EX. CATCH BASIN
RIM ELEV.=2.946
INV. ELEV.=1.951

(C) EX. CATCH BASIN (ABANDONED)
RIM ELEV.=3.049

(D) EX. CATCH BASIN
RIM ELEV.=2.994
INV. ELEV.=2.085

(1) EX. STORM M.H.
RIM ELEV.=3.110
INV. ELEV.=−0.021

(2) EX. CATCH BASIN
RIM ELEV.=2.951
INV. ELEV.=2.158

(3) EX. CATCH BASIN
RIM ELEV.=3.021
INV. ELEV.=2.561

(4) EX. CATCH BASIN
RIM ELEV.=3.051
INV. ELEV.=2.204

(5) EX. CATCH BASIN
RIM ELEV.=3.075
INV. ELEV.=2.615

(6) EX. CASIN BASIN
RIM ELEV.=2.960
INV. ELEV.=2.323

(7) EX. CATCH BASIN
RIM ELEV.=3.033
INV. ELEV.=2.384

(8) EX. CATCH BASIN
RIM ELEV.=2.995
INV. ELEV.=2.535

(9) EX. CATCH BASIN
RIM ELEV.=3.061
INV. ELEV.=2.683

(10) EX. CATCH BASIN
RIM ELEV.=2.930
INV. ELEV.=2.247

(11) EX. STORM DRAIN VAULT
TOP ELEV.=3.082
INV. ELEV.= −0.104

(12) EX. CATCH BASIN
RIM ELEV.=2.875
INV. ELEV.=2.412

(13) EX. CATCH BASIN
RIM ELEV.=3.087
INV. ELEV.=2.308
(NOT FOUND)

(14) EX. CATCH BASIN
RIM ELEV.=3.055
INV. ELEV.=1.854

(15) EX. CATCH BASIN
RIM ELEV.=2.922
(FILLED WITH SEDIMENT)

(16) EX. STORM M.H.
RIM ELEV.=3.151
INV. ELEV.=1.078

(17) EX. STORM M.H.
RIM ELEV.=3.122
(COVER SEALED SHUT)

(17A) EX. CATCH BASIN
RIM ELEV.=3.123
INV. ELEV.=1.924

(18) EX. CATCH BASIN
RIM ELEV.=2.706
INV. ELEV.=2.122

(19) EX. STORM DRAIN M.H.
RIM ELEV.=3.048
INV. ELEV.=1.463

(20) EX. STORM DRAIN M.H.
RIM ELEV.=2.908
(PLUGGED & FLOODED)

(21) EX. STORM DRAIN M.H.
RIM ELEV.=3.123
INV. ELEV.=1.524

(21A) EX. CATCH BASIN
RIM ELEV.=2.975
INV. ELEV.=2.365

(22) EX. STORM DRAIN M.H.
RIM ELEV.=3.123
INV. ELEV.=1.631

(23) EX. CATCH BASIN
RIM ELEV.=3.150
INV. ELEV.=2.073

(24) EX. CATCH BASIN
RIM ELEV.=3.021
INV. ELEV.=2.168

(25) EX. STORM M.H.
RIM ELEV.=3.373
INV. ELEV.=1.725

(26) EX. CATCH BASIN
RIM ELEV.=3.203
INV. ELEV.=2.225

(27) EX. CATCH BASIN
RIM ELEV.=2.978
INV. ELEV.=1.887

(28) EX. CATCH BASIN
RIM ELEV.=3.196
INV. ELEV.=2.363

(29) EX. CATCH BASIN
RIM ELEV.=3.026
INV. ELEV.=2.387

(30) EX. CATCH BASIN
RIM ELEV.=3.050
INV. ELEV.=2.329

(31) EX. CATCH BASIN
RIM ELEV.=3.182
INV. ELEV.=2.362

(32) EX. CATCH BASIN
RIM ELEV.=2.691
INV. ELEV. NOT FOUND

(33) EX. STORM M.H.
RIM ELEV.=3.055
INV. ELEV. (ABAN. 100mm)=2.591
INV. ELEV.=1.293

(34) EX. STORM M.H.
RIM ELEV.=3.119
INV. ELEV.=1.296

(34A) EX. STORM M.H.
RIM ELEV.=3.354
INV. ELEV.=1.322
300mm INV. ELEV.=1.627

(35) EX. CURB INLET
RIM ELEV.=3.227
INV. ELEV.=1.655

(36) EX. CURB INLET
RIM ELEV.=3.213
INV. ELEV.=1.841

(37) EX. STORM M.H.
RIM ELEV.=3.350
INV. ELEV.=2.079

(38) EX. CURB INLET
RIM ELEV.=3.350
INV. ELEV.=2.634

(39) EX. CURB INLET
RIM ELEV.=3.356
INV. ELEV.=2.625

(40) EX. CATCH BASIN
RIM ELEV.=3.257
INV. ELEV.=2.424

(41) EX. CATCH BASIN
RIM ELEV.=3.045
INV. ELEV.=2.393

(42) EX. CATCH BASIN
RIM ELEV.=3.085
INV. ELEV.=2.332

(43) OUTFALL ELEV. 1.518

(44) EX. CATCH BASIN
RIM ELEV.=2.979
INV. ELEV.=2.363

(45) EX. STORM M.H.
RIM ELEV.=3.935
INV. ELEV.=1.689

(46) EX. CURB INLET
RIM ELEV.=3.916
INV. ELEV.=1.628

(47) EX. CURB INLET
RIM ELEV.=3.904
INV. ELEV.=1.533

(48) FLARED−END OUTFALL
INV. ELEV.=1.609

(49) INV. ELEV.=2.199

(50) CONCRETE HEADWALL℄
TOP OF HEADWALL ( ) = 2.625
INV. ELEV.(NORTH PIPE) =1.229
INV. ELEV.(SOUTH PIPE) =1.214

(51) EX. CATCH BASIN
RIM ELEV.=3.125
INV. ELEV.=2.491

## SANITARY SEWER STRUCTURES

⟨A⟩ EX. SANITARY VLT./M.H.
RIM ELEV.=3.078
INV. ELEV.=0.365

⟨1⟩ EX. SANITARY M.H.
RIM ELEV.=3.119
INV. ELEV.=−0.143

⟨2⟩ EX. SANITARY M.H.
RIM ELEV.=3.097
INV. ELEV.=−0.104

⟨3⟩ EX. SANITARY M.H.
RIM ELEV.=3.257
INV. ELEV.=−0.123

⟨4⟩ EX. SANITARY M.H.
RIM ELEV.=3.034
INV. ELEV.=0.961

⟨5⟩ EX. SANITARY M.H.
RIM ELEV.=3.187
INV. ELEV.=1.876

⟨8⟩ EX. SANITARY M.H.
RIM ELEV.=3.345
INV. ELEV.=2.247

⟨9⟩ EX. SANITARY M.H.
RIM ELEV.=3.362
INV. ELEV.=2.508

⟨10⟩ EX. SANITARY M.H.
RIM ELEV.=3.345
INV. ELEV.=0.719

⟨11⟩ EX. SANITARY M.H.
RIM ELEV.=3.055
INV. ELEV.=1.180

⟨12⟩ EX. SANITARY M.H.
RIM ELEV.=3.442
INV. ELEV.=1.704

## OILY WASTE/WASTE OIL STRUCTURES

△1 PLANNED OILY WASTE COLLECTION M.H.'S
APPROX. RIM ELEV.=3.150
APPROX. INV. ELEV.=0.050
(REFERENCE:NAVFAC DWG. 4337412)

△2 OILY WASTE / WASTE OIL M.H.
RIM ELEV.=3.170
INV. ELEV.=0.110

## ELECTRICAL AND COMMUNICATION STRUCTURES

[A] EX. ELEC./TEL. M.H.
RIM ELEV.=3.052

[B] EX. ELEC./TEL. M.H.
RIM ELEV.=3.053

[C] EX. ELEC. M.H.
RIM ELEV.=3.052

[D] EX. TEL. M.H.
RIM ELEV.=3.028

[E] EX. TEL. M.H.
RIM ELEV.=3.099

[1] EX. TEL. M.H.
RIM ELEV.=3.150

[2] EX. ELEC. M.H.
RIM ELEV.=3.200

[3] EX. ELEC./TEL. M.H.
RIM ELEV.=3.041

[4] UNKNOWN MANHOLE
RIM ELEV.=3.010

[5] EX. ELEC. M.H.
RIM ELEV.=3.093

[6] EX. ELEC./TEL. M.H.
RIM ELEV.=3.011

[7] EX. ELEC. M.H.
RIM ELEV.=3.044

[8] EX. TEL. M.H.
RIM ELEV.=3.184

[9] EX. TEL. M.H.
RIM ELEV.=3.130

[10] EX. ELEC./TEL. M.H.
RIM ELEV.=3.008

[11] EX. ELEC. M.H.
RIM ELEV.=3.194

[12] EX. TEL. M.H.
RIM ELEV.=3.123

[13] EX. TEL. M.H.
RIM ELEV.=3.177

[14] EX. ELEC. M.H.
RIM ELEV.=3.150

[15] EX. ELEC./TEL. M.H.
RIM ELEV.=3.263

[16] EX. ELEC. M.H.
RIM ELEV.=3.052

[17] EX. TEL. M.H.
RIM ELEV.=3.341

[18] EX. TEL. M.H.
RIM ELEV.=2.890

[19] EX. TEL. M.H.
RIM ELEV.=2.636

[20] EX. ELEC. VAULT
RIM ELEV.=3.822

[21] EX. TEL. M.H.
RIM ELEV.=3.744

[22] EX. ELEC. M.H.
RIM ELEV.=3.764

[23] EX. ELEC. VLT.
RIM ELEV.=3.573

[24] EX. TEL. M.H.
RIM ELEV.=3.588

[25] EX. ELEC. M.H.
RIM ELEV.=4.357

[26] EX. ELEC. M.H.
RIM ELEV.=4.292

[27] EX. TEL. M.H.
RIM ELEV.=4.292

[28] EX. ELEC. M.H.
RIM ELEV.=4.055

[29] EX. TEL. M.H.
RIM ELEV.=4.089

REVISIONS

| SYM. | DESCRIPTION | DATE | APPROVED |
|---|---|---|---|
| | | | |

DESIGNED & ENGINEERED BY: LANTDIV NAVAL FACILITIES ENGINEERING COMMAND

SEAL

APPROVED
ACTIVITY – SATISFACTORY TO
DATE
APPROVED
FOR EFD FOR COMMANDER NAVFAC
1/25/99
DATE

| A/E | EFD |
|---|---|
| DESIGN | TAR |
| DRAWN | TAR |
| REVIEW | JSC |
| QC | |
| CHIEF ARCH./ ENGR. | |
| PROJECT MANAGER | DWB |
| FIRE PROTECTION | DWR |
| BRANCH MANAGER | |
| DESIGN DIRECTOR | |

DEPARTMENT OF THE NAVY
NAVAL FACILITIES ENGINEERING COMMAND
NORFOLK, VIRGINIA
NAVAL STATION ATLANTIC DIVISION NORFOLK, VA.

# PIER 2 REPLACEMENT

EXISTING UTILITY STRUCTURE DATA

| | |
|---|---|
| CODE ID. NO. 80091 | SIZE D |
| SCALE: NONE | |
| EFD NO. 493913 | |
| STA. PROJ. NO. P−355 | |
| SPEC. NO. 05−97−7041 | |
| CONSTR. CONTR. NO. N62470−97−B−7041 | |
| NAVFAC DRAWING NO. 4393913 | |
| SHEET 23 OF 240 | |

C−21

DRAWFORM REVISION 27 JULY 98

FILENAME: 7041C021.DWG, PLOT SCALE: 1=1, SAVED ON 01/07/99 AT 12:35, XREFS: NONE

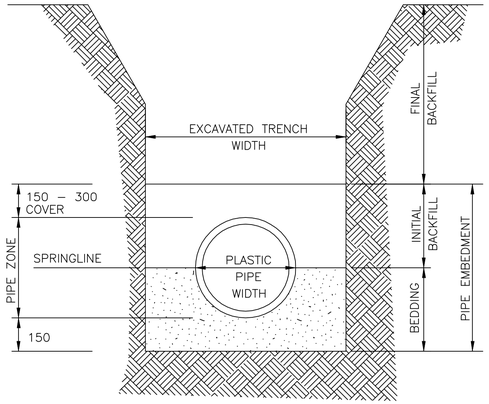


NOTE: PROVIDE BEDDING IN ACCORDANCE WITH THE SPECIFICATIONS.

A C16 C22 C17 TRENCH FOR PLASTIC PIPE

NOT TO SCALE

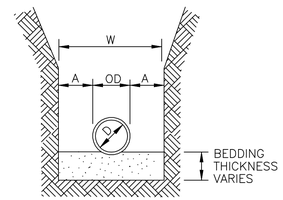


| PIPE DIA "D" | MAXIMUM "A" |
|---|---|
| 150 TO 375 | 200 |
| 450 TO 525 | 250 |
| 600 TO 750 | 300 |
| 825 TO 1050 | 375 |
| 1200 & LARGER | 450 |

MAXIMUM TRENCH WIDTH "W" TAKEN AT TOP OF PIPE

NOTE: PROVIDE BEDDING IN ACCORDANCE WITH THE SPECIFICATIONS.

B C16 C22 C17 TRENCH FOR NON–PLASTIC PIPE

NOT TO SCALE

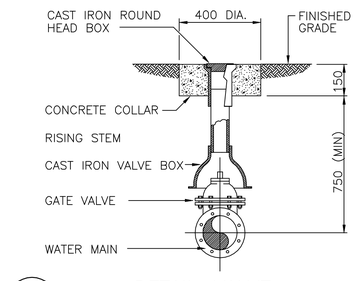


C C16 C22 DETAIL–VALVE

NOT TO SCALE

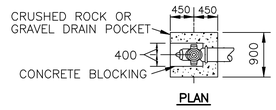


PLAN

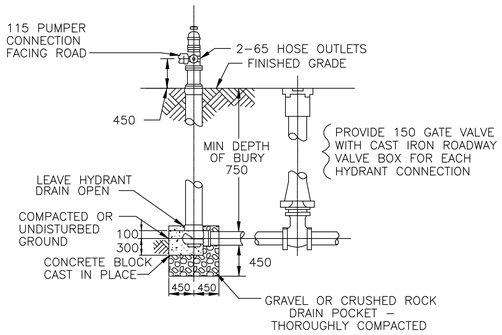


D C16 C22 FIRE HYDRANT

NOT TO SCALE

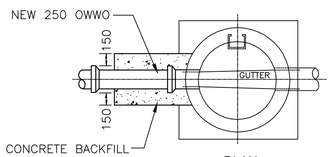


PLAN

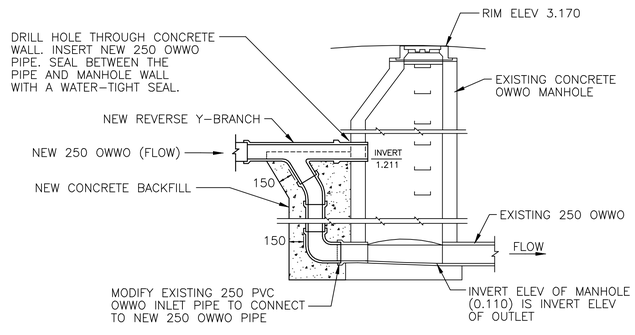


SECTION

E C17 C22 NEW DROP CONNECTION AT EXISTING OWWO MANHOLE 2

NOT TO SCALE

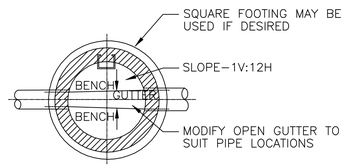


PLAN

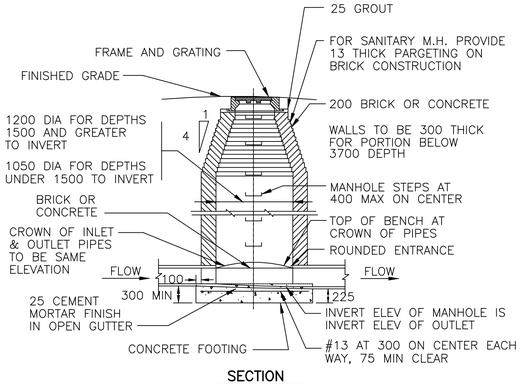


SECTION

F C16 C22 MANHOLE

NOT TO SCALE

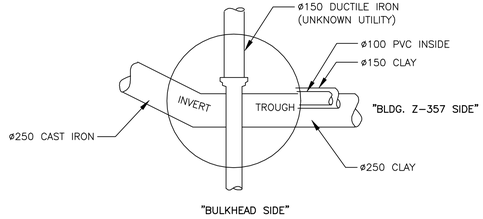


G C10 C22 PLAN VIEW OF EXISTING MANHOLE (22)

NOT TO SCALE

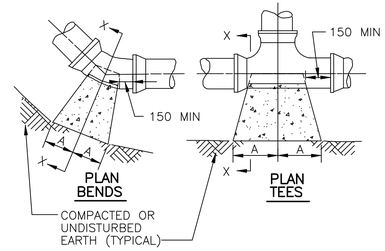


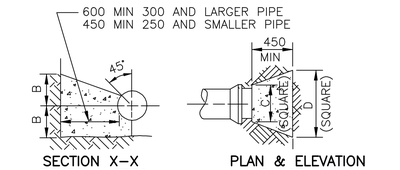


| SIZE | 1/4 BENDS A | 1/4 BENDS B | 1/8 BENDS A | 1/8 BENDS B | 1/16 BENDS A | 1/16 BENDS B | TEES A | TEES B | PLUGS C | PLUGS D |
|---|---|---|---|---|---|---|---|---|---|---|
| 150 | 400 | 250 | 225 | 250 | 150 | 200 | 250 | 300 | 250 | 525 |
| 200 | 550 | 325 | 300 | 325 | 200 | 250 | 325 | 400 | 300 | 725 |
| 250 | 650 | 425 | 350 | 425 | 250 | 325 | 400 | 500 | 350 | 900 |
| 300 | 725 | 525 | 400 | 525 | 275 | 400 | 450 | 600 | 400 | 1025 |
| 350 | 875 | 600 | 475 | 600 | 300 | 500 | 550 | 675 | 450 | 1200 |
| 400 | 950 | 675 | 525 | 675 | 300 | 600 | 600 | 750 | 500 | 1350 |

H C16 C22 THRUST BLOCKS

NOT TO SCALE

REVISIONS

| SYM. | DESCRIPTION | DATE | APPROVED |
|---|---|---|---|

DESIGNED & ENGINEERED BY: LANTDIV NAVAL FACILITIES ENGINEERING COMMAND

SEAL

APPROVED

ACTIVITY – SATISFACTORY TO

DATE

APPROVED FOR CO FOR EFD FOR COMMANDER NAVFAC

DATE 1/25/99

| A/E | EFD |
|---|---|
| DESIGN | TAR |
| DRAWN | TAR |
| REVIEW | JSC |
| QC | |
| CHIEF ARCH./ ENGR. | |
| PROJECT MANAGER | DWB |
| FIRE PROTECTION | DWR |
| BRANCH MANAGER | |
| DESIGN DIRECTOR | |

NAVAL FACILITIES ENGINEERING COMMAND
DEPARTMENT OF THE NAVY
ATLANTIC DIVISION
NAVAL STATION
NORFOLK, VIRGINIA

# PIER 2 REPLACEMENT

UTILITY DETAILS

CODE ID. NO. 80091 SIZE D

SCALE: NONE

EFD NO. 493914

STA. PROJ. NO. P–355

SPEC. NO. 05–97–7041

CONSTR. CONTR. NO. N62470–97–B–7041

NAVFAC DRAWING NO. 4393914

SHEET 24 OF 240

C–22

FILENAME: 7041C022.DWG, PLOT SCALE: 1=1, SAVED ON 01/07/99 AT 12:36, XREFS: NONE

DRAWFORM REVISION 27 JULY 98

8 7 6 5 4 3 2 1

D C B A

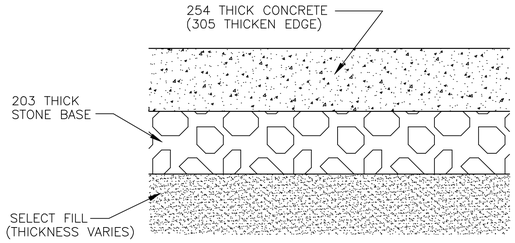


1 C24 C23 NEW CONCRETE PAVEMENT SECTION

NOT TO SCALE

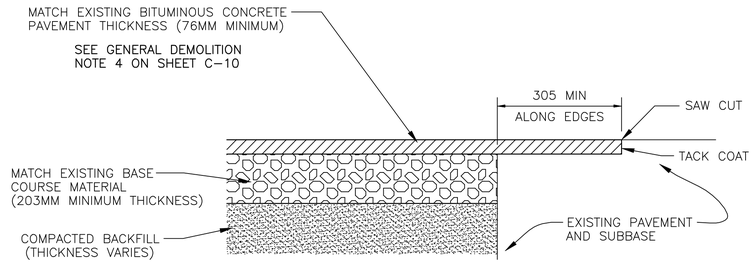


2 C16 C23 NEW BITUMINOUS CONCRETE PAVEMENT FOR UTILITY CUT PATCHES

NOT TO SCALE

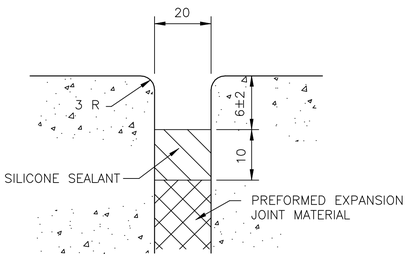


DETAIL

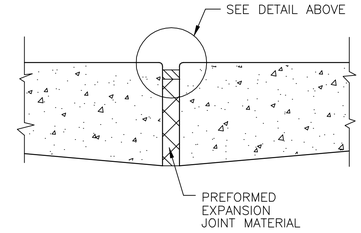


J C24 C23 THICKENED-EDGE EXPANSION JOINT

REINFORCED AND PLAIN CONCRETE PAVEMENTS

NOT TO SCALE

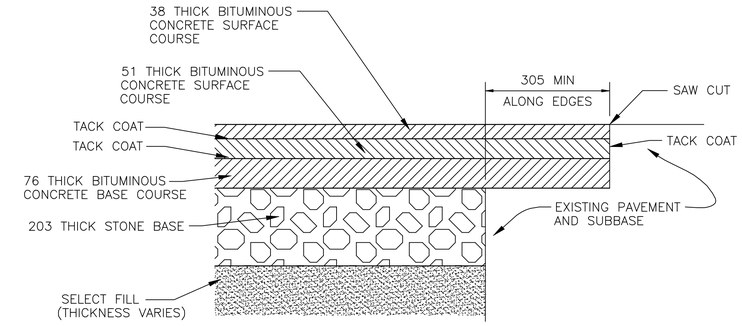


3 C16 C23 NEW BITUMINOUS CONCRETE PAVEMENT SECTION

NOT TO SCALE

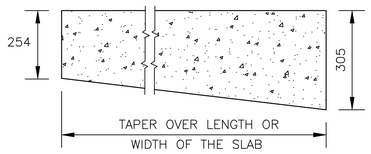


I C24 C23 THICKENED EDGE (TE)

NOT TO SCALE

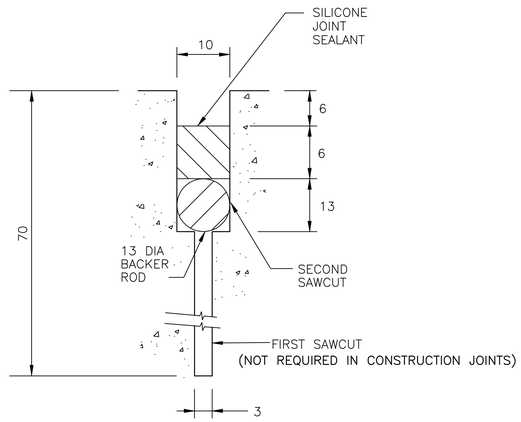


K C24 C23 TRANSVERSE CONTRACTION JOINT (TCJ)
LONGITUDINAL CONTRACTION JOINT (LCJ)

NOT TO SCALE

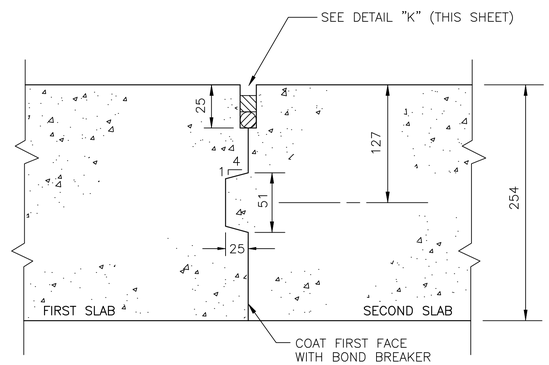


L C24 C23 LONGITUDINAL CONSTRUCTION JOINT, KEYED (LKJ)

NOT TO SCALE

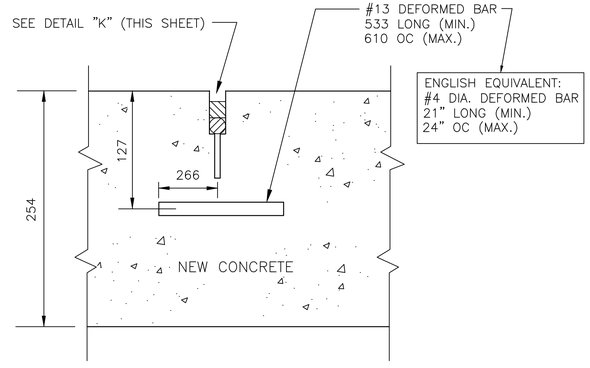


M C24 C23 TIED JOINTS

NOT TO SCALE

| REVISIONS | | | |
|---|---|---|---|
| SYM. | DESCRIPTION | DATE | APPROVED |

DESIGNED & ENGINEERED BY: LANTDIV NAVAL FACILITIES ENGINEERING COMMAND

SEAL

APPROVED

ACTIVITY – SATISFACTORY TO

DATE

APPROVED
FOR EFD FOR COMMANDER NAVFAC
1/25/99

DATE

| A/E | EFD |
|---|---|
| DESIGN | TAR |
| DRAWN | TAR |
| REVIEW | JSC |
| QC | |
| CHIEF ARCH./ ENGR. | |
| PROJECT MANAGER | DWB |
| FIRE PROTECTION | DWR |
| BRANCH MANAGER | |
| DESIGN DIRECTOR | |

DEPARTMENT OF THE NAVY
NAVAL STATION
ATLANTIC DIVISION
NAVAL FACILITIES ENGINEERING COMMAND
NORFOLK, VIRGINIA

NORFOLK, VIRGINIA
PIER 2 REPLACEMENT
PAVEMENT DETAILS

| | |
|---|---|
| CODE ID. NO. 80091 | SIZE D |
| SCALE: 1:300 | |
| EFD NO. 493915 | |
| STA. PROJ. NO. P-355 | |
| SPEC. NO. 05-97-7041 | |
| CONSTR. CONTR. NO. N52470-97-B-7041 | |
| NAVFAC DRAWING NO. 4393915 | |
| SHEET 25 OF 240 | |

C-23

DRAWFORM REVISION 27 JULY 98

FILENAME: 7041C023.DWG, PLOT SCALE: 1" = 25', SAVED ON 01/07/99 AT 12:36, XREFS: NONE

EJ = EXPANSION JOINT (SEE DETAIL "J"–C24/C23)
TE = THICKENED EDGE (SEE DETAIL "I"–C24/C23)
TCJ = TRANSVERSE CONTRACTION JOINT (SEE DETAIL "K"–C24/C23)
LKJ = LONGITUDINAL CONSTRUCTION JOINT (SEE DETAIL "L"–C24/C23)
LCJ = LONGITUDINAL CONTRACTION JOINT (SEE DETAIL "K"–C24/C23)

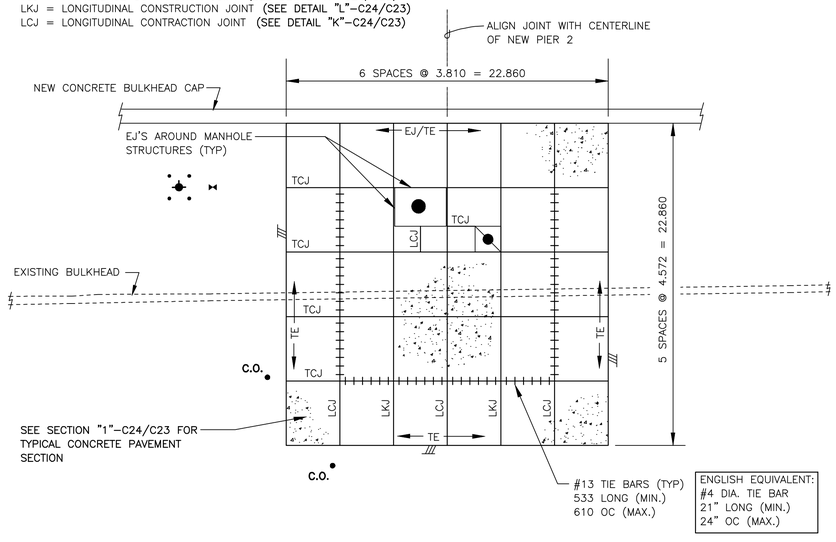


ENGLISH EQUIVALENT:
#4 DIA. TIE BAR
21" LONG (MIN.)
24" OC (MAX.)

M C24 C23

## NEW CONCRETE PAVEMENT – JOINT PLAN

SCALE: 1 : 200

## NOTES

1. MINIMUM DISTANCE FROM THE CORNER EDGE OF A CONCRETE SLAB TO A TIE BAR SHALL BE 305MM.
2. THE SIDES OF ALL SLABS THAT ARE WITHIN ONE (1) METER OF A MANHOLE STRUCTURE SHALL HAVE A THICKENED EDGE.

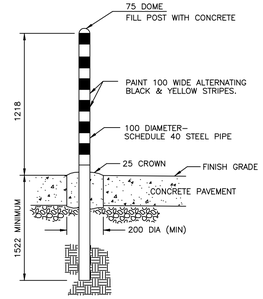


O C16 C24 GUARD POST
NOT TO SCALE

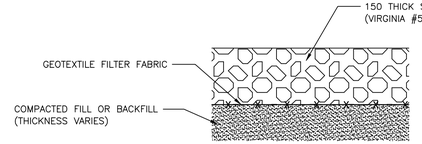


P C19 C24 NEW GRAVEL SURFACE AT ELECTRICAL SUBSTATION
NOT TO SCALE

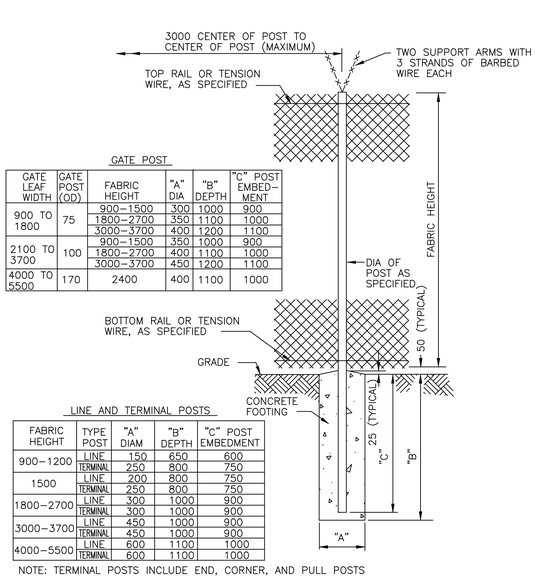


GATE POST

| GATE LEAF WIDTH | GATE POST (OD) | FABRIC HEIGHT | "A" DIA | "B" DEPTH | "C" POST EMBED-MENT |
|---|---|---|---|---|---|
| 900 TO 1800 | 75 | 900–1500 | 300 | 1000 | 900 |
| | | 1800–2700 | 350 | 1100 | 1000 |
| | | 3000–3700 | 400 | 1200 | 1100 |
| 2100 TO 3700 | 100 | 900–1500 | 350 | 1000 | 900 |
| | | 1800–2700 | 400 | 1100 | 1000 |
| | | 3000–3700 | 450 | 1200 | 1100 |
| 4000 TO 5500 | 170 | 2400 | 400 | 1100 | 1000 |

LINE AND TERMINAL POSTS

| FABRIC HEIGHT | TYPE POST | "A" DIAM | "B" DEPTH | "C" POST EMBEDMENT |
|---|---|---|---|---|
| 900–1200 | LINE | 150 | 650 | 600 |
| | TERMINAL | 250 | 800 | 750 |
| 1500 | LINE | 200 | 800 | 750 |
| | TERMINAL | 250 | 800 | 750 |
| 1800–2700 | LINE | 300 | 1000 | 900 |
| | TERMINAL | 300 | 1000 | 900 |
| 3000–3700 | LINE | 450 | 1000 | 900 |
| | TERMINAL | 450 | 1000 | 900 |
| 4000–5500 | LINE | 600 | 1100 | 1000 |
| | TERMINAL | 600 | 1100 | 1000 |

NOTE: TERMINAL POSTS INCLUDE END, CORNER, AND PULL POSTS

N C19 C24 CHAIN LINK FENCE
NOT TO SCALE

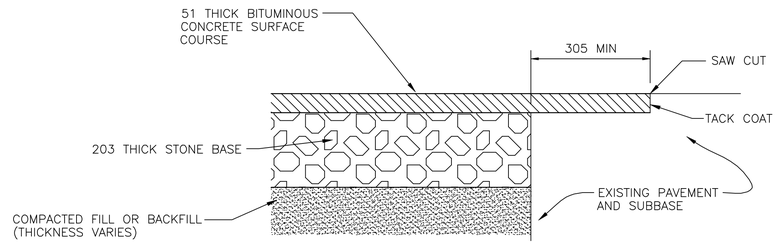


## NEW BITUMINOUS CONCRETE PAVEMENT SECTION AT ELECTRICAL SUBSTATION

4 C19 C24
NOT TO SCALE

GRAPHIC SCALES
1:200 0 5 10 15 20m

REVISIONS

| SYM | DESCRIPTION | DATE | APPROVED |
|---|---|---|---|

DESIGNED & ENGINEERED BY: LANTDIV NAVAL FACILITIES ENGINEERING COMMAND

SEAL

APPROVED
ACTIVITY – SATISFACTORY TO
DATE
APPROVED
FOR EFD FOR COMMANDER NAVFAC
1/25/99
DATE

| A/E | EFD |
|---|---|
| DESIGN | TAR |
| DRAWN | TAR |
| REVIEW | JSC |
| QC | |
| CHIEF ARCH./ ENGR. | |
| PROJECT MANAGER | DWB |
| FIRE PROTECTION | DWR |
| BRANCH MANAGER | |
| DESIGN DIRECTOR | |

DEPARTMENT OF THE NAVY
NAVAL STATION
ATLANTIC DIVISION
NAVAL FACILITIES ENGINEERING COMMAND
NORFOLK, VIRGINIA
NAVAL STATION NORFOLK, VIRGINIA
PIER 2 REPLACEMENT
MISCELLANEOUS DETAILS

CODE ID. NO. 80091 SIZE D
SCALE: GRAPHIC
EFD NO. 493916
STA. PROJ. NO. P–355
SPEC. NO. 05–97–7041
CONSTR. CONTR. NO. N62470–97–B–7041
NAVFAC DRAWING NO. 4393916
SHEET 26 OF 240
C–24

FILENAME: 7041C024.DWG, PLOT SCALE: 1=1, SAVED ON 01/07/99 AT 12:37, XREFS: NONE

DRAWFORM REVISION 27 JULY 98

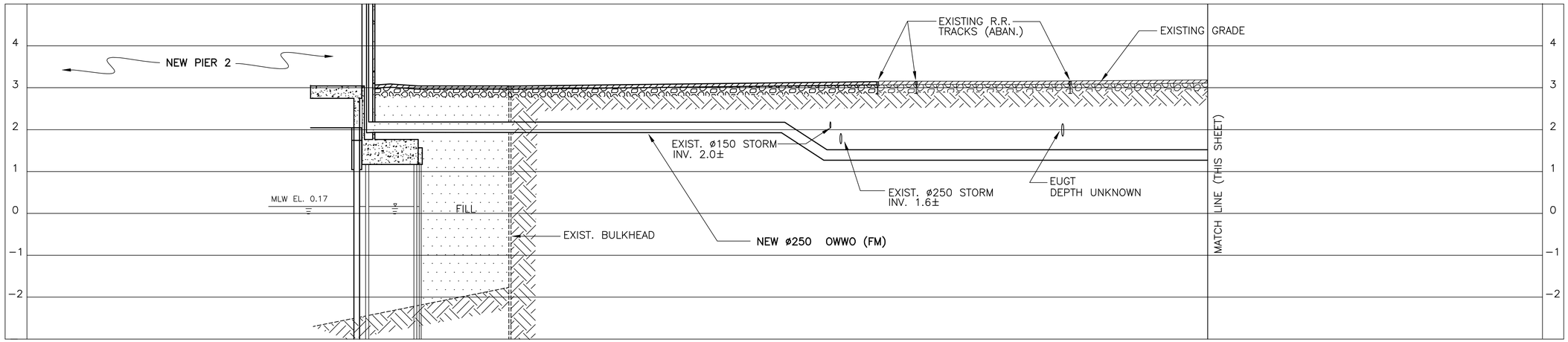


## OILY WASTE/WASTE OIL (OWWO) PROFILE

HORIZ. SCALE: 1 : 300
VERT. SCALE: 1 : 50

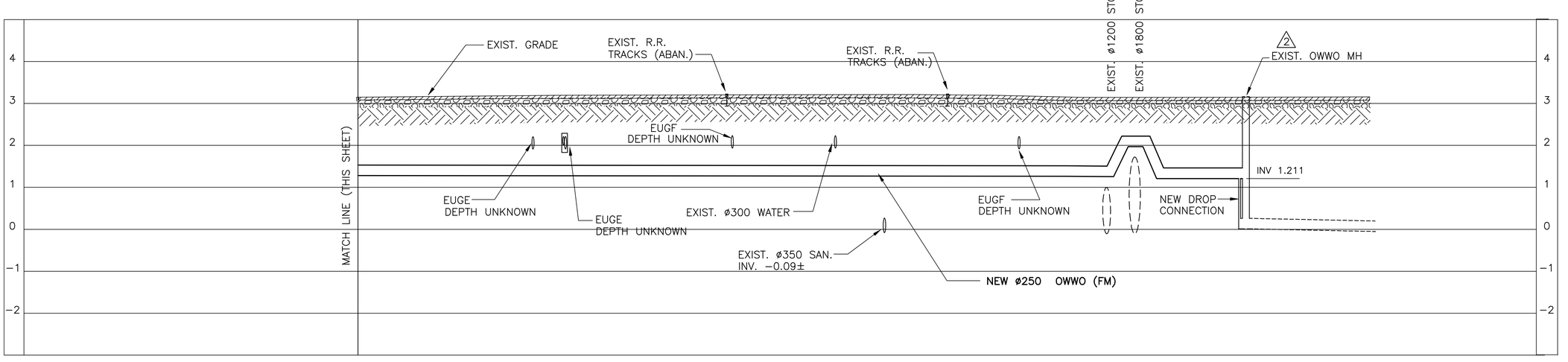


## OILY WASTE/WASTE OIL (OWWO) PROFILE

HORIZ. SCALE: 1 : 300
VERT. SCALE: 1 : 50

GRAPHIC SCALES

1:300 0 5 10 20 30m

1:50 0 1 2 3 4 5m

REVISIONS

| SYM. | DESCRIPTION | DATE | APPROVED |
|---|---|---|---|

DESIGNED & ENGINEERED BY: LANTDIV NAVAL FACILITIES ENGINEERING COMMAND

SEAL

APPROVED

ACTIVITY – SATISFACTORY TO

DATE

APPROVED
FOR EFD FOR COMMANDER NAVFAC
1/25/99

DATE

| A/E | EFD |
|---|---|
| DESIGN | TAR |
| DRAWN | TAR |
| REVIEW | JSC |
| QC | |
| CHIEF ARCH./ ENGR. | |
| PROJECT MANAGER | DWB |
| FIRE PROTECTION | DWR |
| BRANCH MANAGER | |
| DESIGN DIRECTOR | |

DEPARTMENT OF THE NAVY
NAVAL STATION
ATLANTIC DIVISION
NAVAL FACILITIES ENGINEERING COMMAND
NORFOLK, VIRGINIA

NAVAL STATION NORFOLK, VIRGINIA

# PIER 2 REPLACEMENT

OILY WASTE/WASTE OIL (OWWO) PROFILE

| | |
|---|---|
| CODE ID. NO. 80091 | SIZE D |
| SCALE: | GRAPHIC |
| EFD NO. | 493917 |
| STA. PROJ. NO. | P-355 |
| SPEC. NO. | 05-97-7041 |
| CONSTR. CONTR. NO. | N62470-97-B-7041 |
| NAVFAC DRAWING NO. | 4393917 |
| SHEET | 27 OF 240 |

C-25

DRAWFORM REVISION 27 JULY 98

FILENAME: 7041C025.DWG, PLOT SCALE: 1" = 1', SAVED ON 01/07/99 AT 12:37, XREFS: NONE

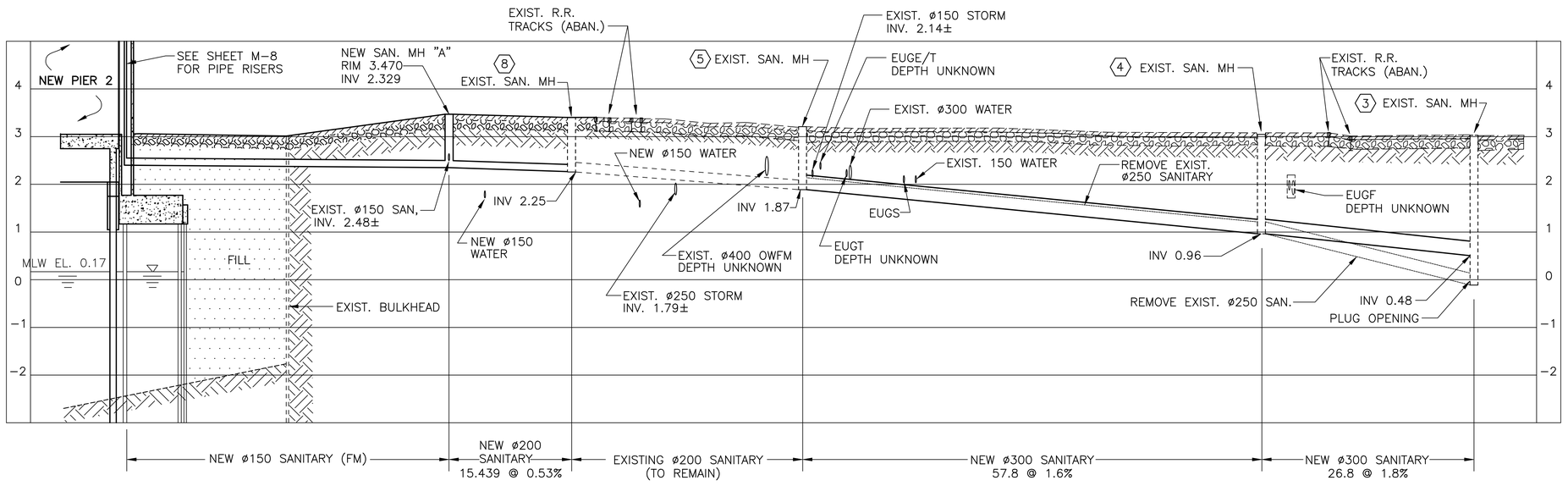


## SANITARY (SAN) PROFILE

HORIZ. SCALE: 1 : 300
VERT. SCALE: 1 : 50

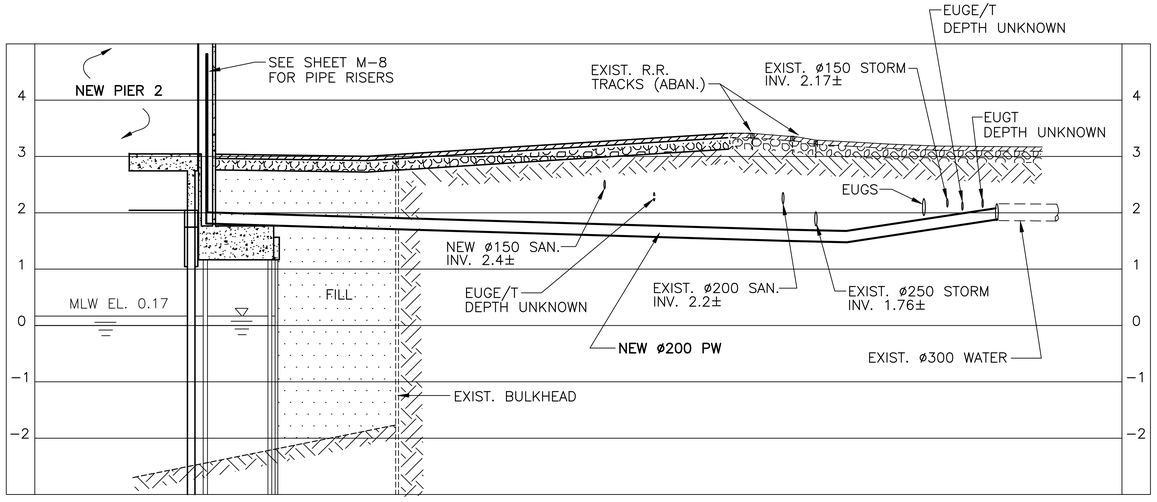


## POTABLE WATER (PW) PROFILE

HORIZ. SCALE: 1 : 300
VERT. SCALE: 1 : 50

GRAPHIC SCALES

1:300 0 5 10 20 30m

1:50 0 1 2 3 4 5m

| REVISIONS | | | |
|---|---|---|---|
| SYM. | DESCRIPTION | DATE | APPROVED |

DESIGNED & ENGINEERED BY: LANTDIV NAVAL FACILITIES ENGINEERING COMMAND

SEAL

APPROVED

ACTIVITY – SATISFACTORY TO

DATE

APPROVED
FOR EFD FOR COMMANDER NAVFAC
1/25/99

DATE

| A/E | EFD |
|---|---|
| DESIGN | TAR |
| DRAWN | TAR |
| REVIEW | JSC |
| QC | |
| CHIEF ARCH./ ENGR. | |
| PROJECT MANAGER | DWB |
| FIRE PROTECTION | DWR |
| BRANCH MANAGER | |
| DESIGN DIRECTOR | |

DEPARTMENT OF THE NAVY
NAVAL STATION
ATLANTIC DIVISION
NAVAL FACILITIES ENGINEERING COMMAND
NORFOLK, VIRGINIA

NAVAL STATION NORFOLK, VIRGINIA
PIER 2 REPLACEMENT
SANITARY (SAN) AND POTABLE WATER (PW) PROFILES

| | |
|---|---|
| CODE ID. NO. 80091 | SIZE D |
| SCALE: | GRAPHIC |
| EFD NO. | 493918 |
| STA. PROJ. NO. | P-355 |
| SPEC. NO. | 05-97-7041 |
| CONSTR. CONTR. NO. | N62470-97-B-7041 |
| NAVFAC DRAWING NO. | 4393918 |
| SHEET | 28 OF 240 |

C-26

DRAWFORM REVISION 27 JULY 98

FILENAME: 7041C026.DWG, PLOT SCALE: 1" = 1', SAVED ON 01/12/99 AT 15:02, XREFS: NONE

D C B A

8 7 6 5 4 3 2 1

SEE SHEET C-28 FOR CONTINUATION

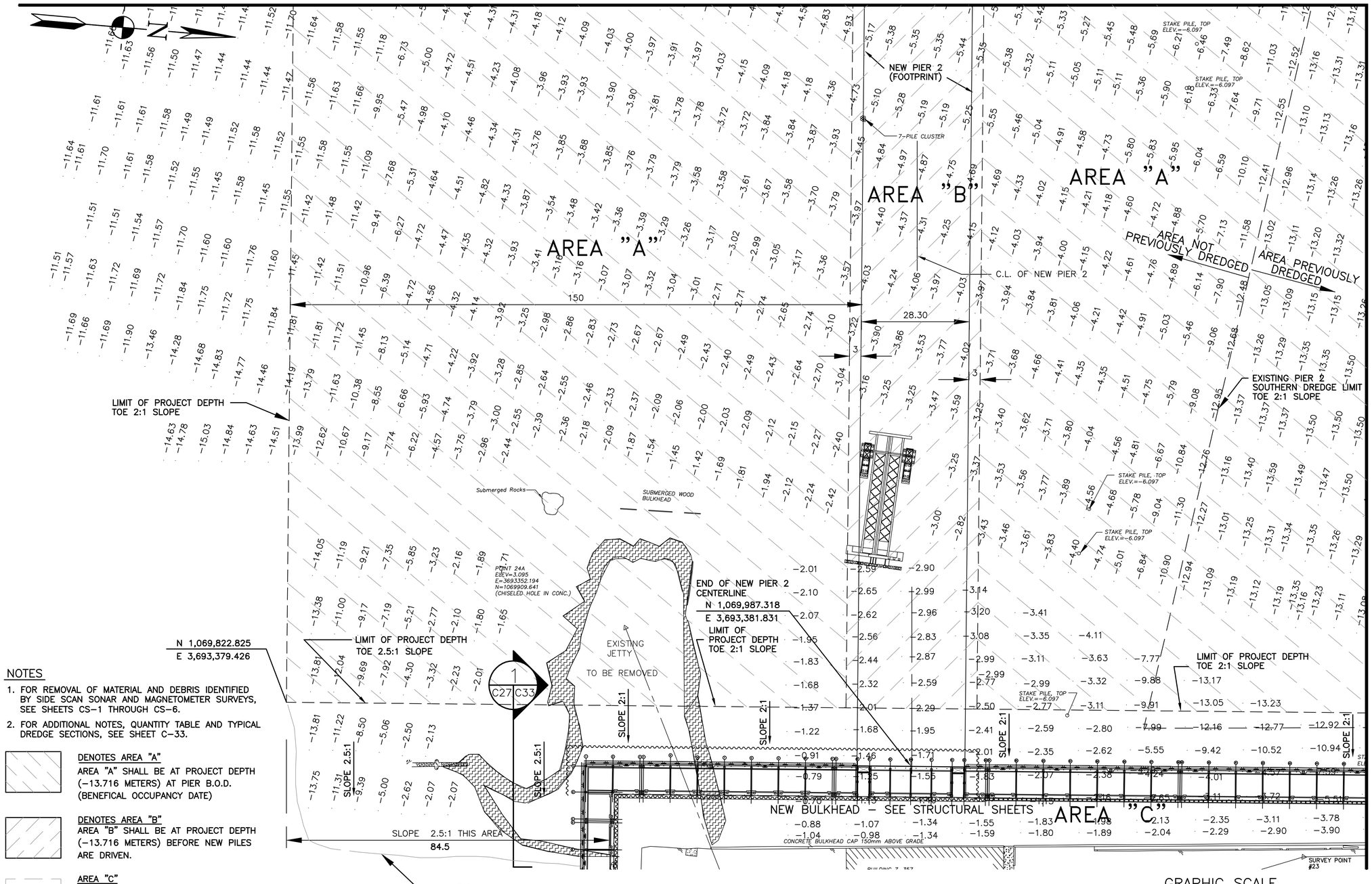


## NOTES

1. FOR REMOVAL OF MATERIAL AND DEBRIS IDENTIFIED BY SIDE SCAN SONAR AND MAGNETOMETER SURVEYS, SEE SHEETS CS-1 THROUGH CS-6.
2. FOR ADDITIONAL NOTES, QUANTITY TABLE AND TYPICAL DREDGE SECTIONS, SEE SHEET C-33.

DENOTES AREA "A"
AREA "A" SHALL BE AT PROJECT DEPTH (-13.716 METERS) AT PIER B.O.D. (BENEFICAL OCCUPANCY DATE)

DENOTES AREA "B"
AREA "B" SHALL BE AT PROJECT DEPTH (-13.716 METERS) BEFORE NEW PILES ARE DRIVEN.

AREA "C"
AREA "C" SHALL BE DREDGED AS SHOWN ON THIS SHEET, C-30, C-38 AND SE-4 BEFORE NEW PILES ARE DRIVEN AND NEW BULKHEAD IS CONSTRUCTED.

GRAPHIC SCALE
1:500 0 10 20 30 40 50m

SEE SHEET C-30 FOR CONTINUATION

REVISIONS

| SYM. | DESCRIPTION | DATE | APPROVED |
|---|---|---|---|

DESIGNED & ENGINEERED BY: LANTDIV NAVAL FACILITIES ENGINEERING COMMAND

SEAL

APPROVED
ACTIVITY - SATISFACTORY TO
DATE
APPROVED
FOR EFD FOR COMMANDER NAVFAC
1/25/99
DATE

| A/E | EFD |
|---|---|
| DESIGN | PES |
| DRAWN | PES |
| REVIEW | |
| QC | |
| CHIEF ARCH./ ENGR. | |
| PROJECT MANAGER | DWR |
| FIRE PROTECTION | DWR |
| BRANCH MANAGER | |
| DESIGN DIRECTOR | |

DEPARTMENT OF THE NAVY
NAVAL FACILITIES ENGINEERING COMMAND
ATLANTIC DIVISION
NAVAL STATION
NORFOLK, VIRGINIA
NAVAL STATION NORFOLK, VA.
PIER 2 REPLACEMENT
DREDGING PLAN

| | |
|---|---|
| CODE ID. NO. 80091 | SIZE D |
| SCALE: | 1:500 |
| EFD NO. | 493919 |
| STA. PROJ. NO. | P-355 |
| SPEC. NO. | 05-97-7041 |
| CONSTR. CONTR. NO. | N62470-97-B-7041 |
| NAVFAC DRAWING NO. | 4393919 |
| SHEET | 29 OF 240 |

C-27

DRAWFORM REVISION 27 JULY 98

FILENAME: 7041C027.DWG; PLOT SCALE: 1=1, SAVED ON 01/08/99 AT 09:45, XREFS: 7041CX02.DWG

SEE SHEET C-29 FOR CONTINUATION

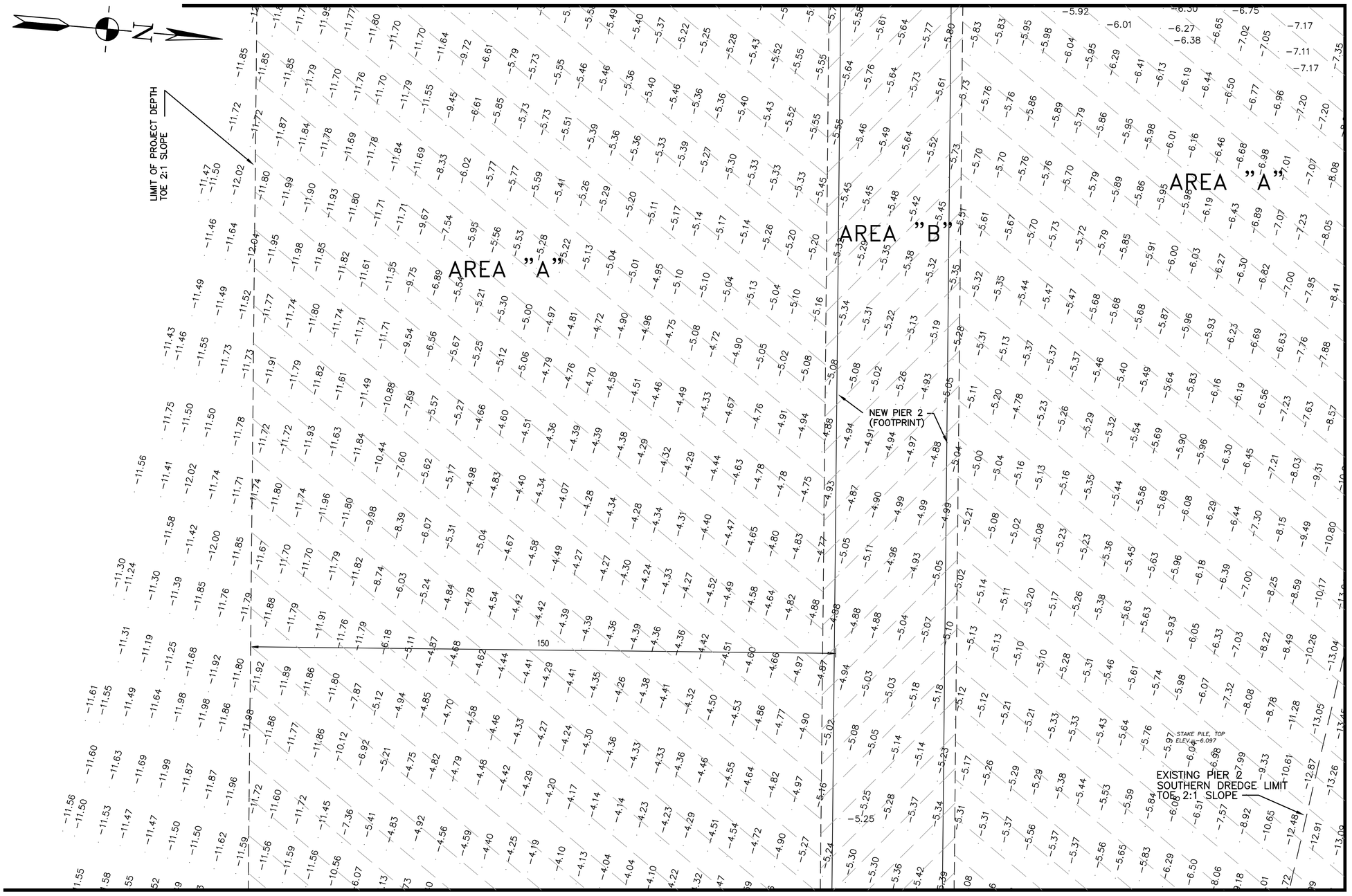


SEE SHEET C-27 FOR CONTINUATION

SEE SHEET C-31 FOR CONTINUATION

GRAPHIC SCALE
1:500 0 10 20 30 40 50m

REVISIONS

| SYM. | DESCRIPTION | DATE | APPROVED |
|---|---|---|---|

DESIGNED & ENGINEERED BY: LANTDIV NAVAL FACILITIES ENGINEERING COMMAND

SEAL

APPROVED
ACTIVITY - SATISFACTORY TO
DATE
APPROVED
FOR E/D FOR COMMANDER NAVFAC
1/25/99
DATE

| A/E | | E/D |
|---|---|---|
| DESIGN | PES | |
| DRAWN | PES | |
| REVIEW | | |
| QC | | |
| CHIEF | ARCH./ ENGR. | |
| PROJECT MANAGER | DWB | |
| FIRE PROTECTION | DWR | |
| BRANCH MANAGER | | |
| DESIGN DIRECTOR | | |

DEPARTMENT OF THE NAVY
NAVAL STATION
ATLANTIC DIVISION
NAVAL FACILITIES ENGINEERING COMMAND
NORFOLK, VIRGINIA

NAVAL STATION
NORFOLK, VA.

# PIER 2 REPLACEMENT

DREDGING PLAN

| | |
|---|---|
| CODE ID. NO. 80091 | SIZE D |
| SCALE: 1:500 | |
| E/D NO. 4939120 | |
| STA. PROJ. NO. P-355 | |
| SPEC. NO. 05-97-7041 | |
| CONSTR. CONTR. NO. N62470-97-B-7041 | |
| NAVFAC DRAWING NO. 4393920 | |
| SHEET 30 OF 240 | |

C-28

DRAWFORM REVISION 27 JULY 98

FILENAME: 7041C028.DWG, PLOT SCALE: 1=1, SAVED ON 01/07/99 AT 15:42, XREFS: 7041CX02.DWG

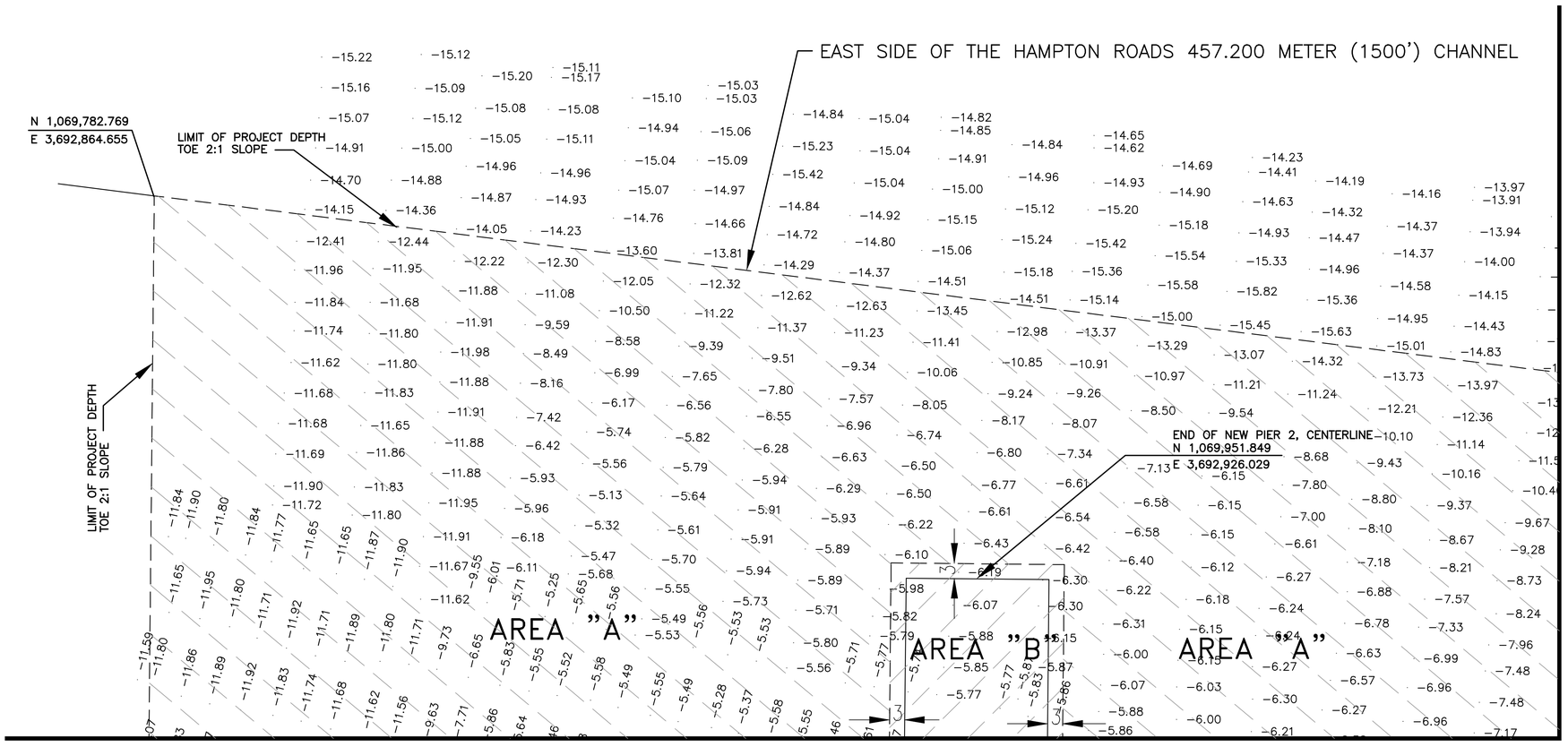


SEE SHEET C-32 FOR CONTINUATION

SEE SHEET C-28 FOR CONTINUATION

GRAPHIC SCALE
1:500 0 10 20 30 40 50m

| REVISIONS | | | |
|---|---|---|---|
| SYM. | DESCRIPTION | DATE | APPROVED |

DESIGNED & ENGINEERED BY: LANTDIV NAVAL FACILITIES ENGINEERING COMMAND

SEAL

APPROVED

ACTIVITY – SATISFACTORY TO

DATE

APPROVED
FOR EFD FOR COMMANDER NAVFAC
1/25/99

DATE

| A/E | EFD |
|---|---|
| DESIGN | PES |
| DRAWN | PES |
| REVIEW | |
| QC | |
| CHIEF | ARCH./ ENGR. |
| PROJECT MANAGER | DWB |
| FIRE PROTECTION | DWR |
| BRANCH MANAGER | |
| DESIGN DIRECTOR | |

DEPARTMENT OF THE NAVY
NAVAL FACILITIES ENGINEERING COMMAND
NAVAL STATION ATLANTIC DIVISION
NAVAL STATION NORFOLK, VIRGINIA
NORFOLK, VA.

# PIER 2 REPLACEMENT

DREDGING PLAN

| | |
|---|---|
| CODE ID. NO. 80091 | SIZE D |
| SCALE: | 1:500 |
| EFD NO. | 493921 |
| STA. PROJ. NO. | P-355 |
| SPEC. NO. | 05-97-7041 |
| CONSTR. CONTR. NO. | N62470-97-B-7041 |
| NAVFAC DRAWING NO. | 4393921 |
| SHEET | 31 OF 240 |

C-29

DRAWFORM REVISION 27 JULY 98

FILENAME: 7041C029.DWG, PLOT SCALE: 1=1, SAVED ON 01/07/99 AT 15:05, XREFS: 7041CX02.DWG

SEE SHEET C-31 FOR CONTINUATION

SEE SHEET C-27 FOR CONTINUATION

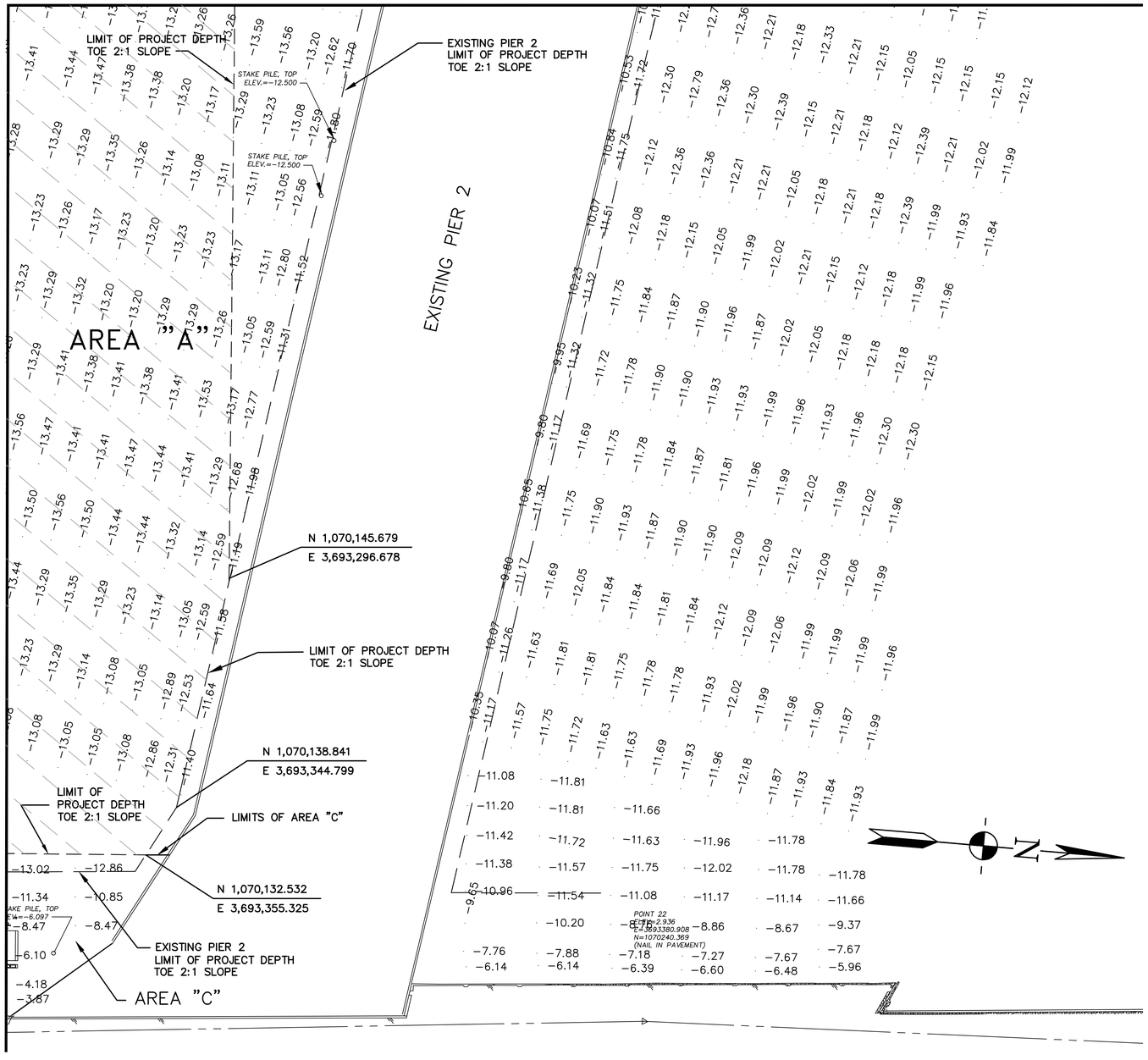


GRAPHIC SCALE

1:500 0 10 20 30 40 50m

| REVISIONS | | | |
|---|---|---|---|
| SYM. | DESCRIPTION | DATE | APPROVED |

DESIGNED & ENGINEERED BY: LANTDIV NAVAL FACILITIES ENGINEERING COMMAND

SEAL

APPROVED

ACTIVITY – SATISFACTORY TO

DATE

APPROVED
FOR EFD FOR COMMANDER NAVFAC
1/25/99

DATE

| A/E | EFD |
|---|---|
| DESIGN | PES |
| DRAWN | PES |
| REVIEW | |
| QC | |
| CHIEF ARCH./ ENGR. | |
| PROJECT MANAGER | DWB |
| FIRE PROTECTION | DWR |
| BRANCH MANAGER | |
| DESIGN DIRECTOR | |

DEPARTMENT OF THE NAVY
NAVAL FACILITIES ENGINEERING COMMAND
NAVAL STATION NORFOLK, VIRGINIA
ATLANTIC DIVISION NORFOLK, VA.

# PIER 2 REPLACEMENT

DREDGING PLAN

| | |
|---|---|
| CODE ID. NO. 80091 | SIZE D |
| SCALE: | 1:500 |
| EFD NO. | 493922 |
| STA. PROJ. NO. | P-355 |
| SPEC. NO. | 05-97-7041 |
| CONSTR. CONTR. NO. | N62470-97-B-7041 |
| NAVFAC DRAWING NO. | 4393922 |
| SHEET | 32 OF 240 |

C-30

DRAWFORM REVISION 27 JULY 98

FILENAME: 7041C030.DWG, PLOT SCALE: 1=1, SAVED ON 01/07/99 AT 15:25, XREFS: 7041CX02.DWG

SEE SHEET C-28 FOR CONTINUATION

SEE SHEET C-32 FOR CONTINUATION

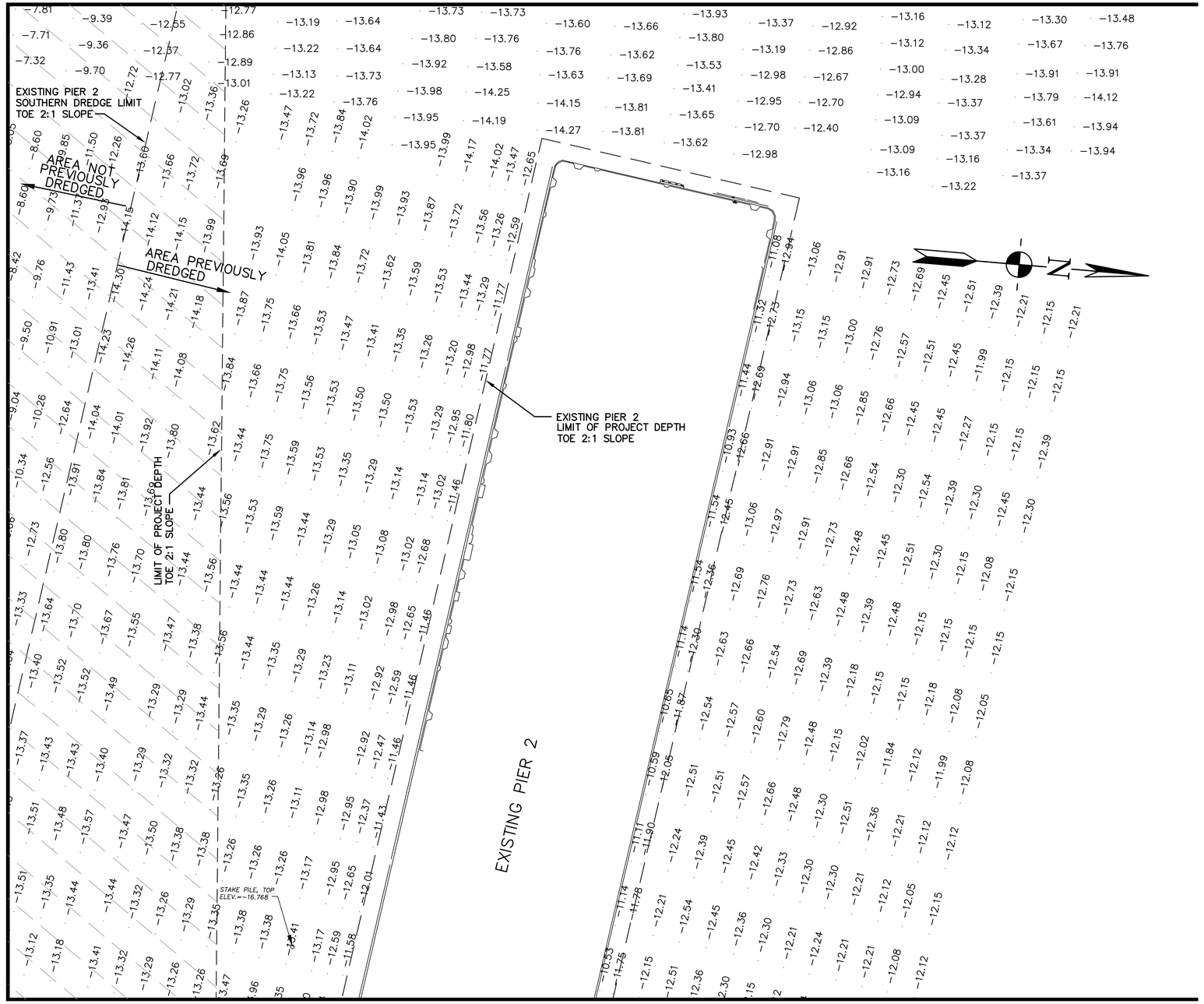


SEE SHEET C-30 FOR CONTINUATION

GRAPHIC SCALE
1:500 0 10 20 30 40 50m

REVISIONS

| SYM. | DESCRIPTION | DATE | APPROVED |
|---|---|---|---|

DESIGNED & ENGINEERED BY:
LANTDIV
NAVAL FACILITIES ENGINEERING COMMAND

SEAL

APPROVED
ACTIVITY – SATISFACTORY TO
DATE
APPROVED
FOR CFD FOR COMMANDER NAVFAC
1/25/99
DATE

| A/E | EFD |
|---|---|
| DESIGN | PES |
| DRAWN | PES |
| REVIEW | |
| QC | |
| CHIEF ARCH./ ENGR. | |
| PROJECT MANAGER | DWB |
| FIRE PROTECTION | DWR |
| BRANCH MANAGER | |
| DESIGN DIRECTOR | |

DEPARTMENT OF THE NAVY
NAVAL STATION
NAVAL FACILITIES ENGINEERING COMMAND
ATLANTIC DIVISION
NORFOLK, VIRGINIA
NAVAL STATION
NORFOLK, VA.

# PIER 2 REPLACEMENT

DREDGING PLAN

| | |
|---|---|
| CODE ID. NO. 80091 | SIZE D |
| SCALE: | 1:500 |
| EFD NO. | 493923 |
| STA. PROJ. NO. | P-355 |
| SPEC. NO. | 05-97-7041 |
| CONSTR. CONTR. NO. | N62470-97-B-7041 |
| NAVFAC DRAWING NO. | 439323 |
| SHEET | 33 OF 240 |

C-31

DRAWFORM REVISION 27 JULY 98

FILENAME: 7041C031.DWG, PLOT SCALE: 1=1, SAVED ON 01/07/99 AT 15:53, XREFS: 7041CX02.DWG

SEE SHEET C-29 FOR CONTINUATION

EAST SIDE OF THE HAMPTON ROADS 457.200 METER (1500') WIDE CHANNEL

N

N 1,070,113.031
E 3,692,877.125

LIMIT OF PROJECT-DEPTH
TOE 2:1 SLOPE

LIMIT OF PROJECT DEPTH
TOE 2:1 SLOPE

AREA "A"

EXISTING PIER 2
SOUTHERN DREDGE LIMIT
TOE 2:1 SLOPE

SEE SHEET C-31 FOR CONTINUATION

GRAPHIC SCALE
1:500 0 10 20 30 40 50m

| REVISIONS | | | |
|---|---|---|---|
| SYM. | DESCRIPTION | DATE | APPROVED |

DESIGNED & ENGINEERED BY: LANTDIV NAVAL FACILITIES ENGINEERING COMMAND

SEAL

APPROVED

ACTIVITY – SATISFACTORY TO

DATE

APPROVED
FOR EFD FOR COMMANDER NAVFAC
1/25/99

DATE

| A/E | EFD |
|---|---|
| DESIGN | PES |
| DRAWN | PES |
| REVIEW | |
| QC | |
| CHIEF ARCH./ ENGR. | |
| PROJECT MANAGER | DWB |
| FIRE PROTECTION | DWR |
| BRANCH MANAGER | |
| DESIGN DIRECTOR | |

DEPARTMENT OF THE NAVY
NAVAL FACILITIES ENGINEERING COMMAND
NAVAL STATION ATLANTIC DIVISION NORFOLK, VIRGINIA

NAVAL STATION NORFOLK, VA.

# PIER 2 REPLACEMENT

DREDGING PLAN

| | |
|---|---|
| CODE ID. NO. 80091 | SIZE D |
| SCALE: | 1:500 |
| EFD NO. | 493924 |
| STA. PROJ. NO. | P-355 |
| SPEC. NO. | 05-97-7041 |
| CONSTR. CONTR. NO. | N62470-97-B-7041 |
| NAVFAC DRAWING NO. | 4393924 |
| SHEET | 34 OF 240 |

C-32

DRAWFORM REVISION 27 JULY 98

FILENAME: 7041C032.DWG, PLOT SCALE: 1=1, SAVED ON 01/08/99 AT 10:36, XREFS: 7041CX02.DWG

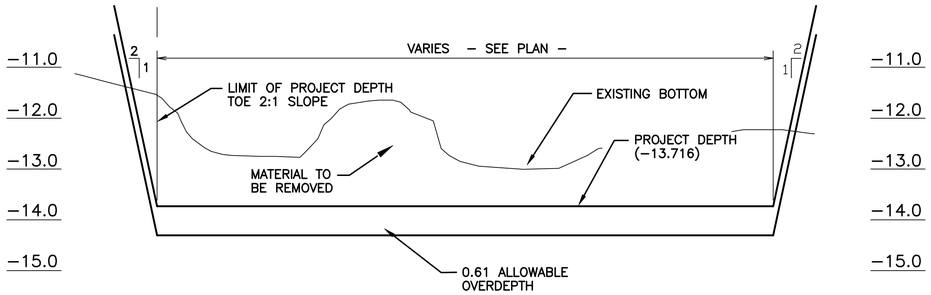


TYPICAL DREDGE SECTION
NEW PIER 2 SLIP AND APPROACH

NOT TO SCALE

| ESTIMATE OF DREDGE QUANTITIES IN CUBIC METERS | | | | | | |
|---|---|---|---|---|---|---|
| SHEET No. | AREA | | | IN CONTRACT | | |
| | | | | QUANTITY TO CONTRACT DEPTH | OVERDEPTH ( 0.6 METERS) | TOTAL |
| SHEETS C-27 THROUGH SHEET C-32 | "A", "B" AND "C" | | | 1,050,000 | 102,000 | 1,152,000 |
| | | | | | | |
| | | | | | | |
| | | | | | | |
| TOTAL PIER 2 | | | | 1,050,000 | 102,000 | 1,152,000 |
| | | | | | | |

QUANTITIES ARE BASED ON "IN-PLACE" MEASUREMENTS AND INCLUDE MATERIAL IN PRISMS TO FORM SLOPES

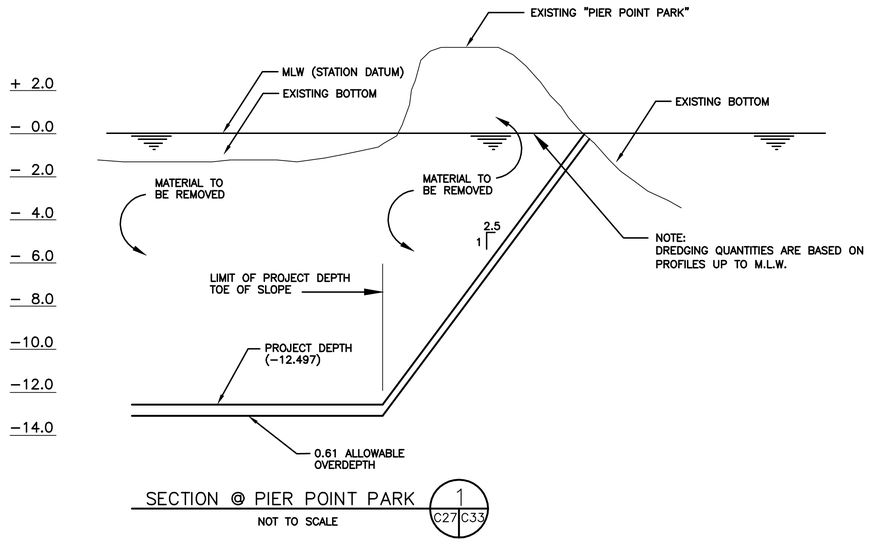


SECTION @ PIER POINT PARK 1/C27 C33

NOT TO SCALE

## DREDGING NOTES:

1. EXISTING PIER 2 SOUTH SLIP DREDGED TO −14.2 METERS (−46.6 FEET) IN MAY 1998. SOUTHERN DREDGE LIMIT APPROXIMATELY 91.44 METERS (300') FROM FACE OF EXISTING PIER 2.
2. SOUNDINGS WERE PERFORMED BY USING A COMBINATION OF AUTOMATION, TAGWIRE AND HANDLINES BETWEEN JULY AND SEPTEMBER 1997 BY NORFOLK PWC HYDROGRAPHIC SECTION.
3. QUANTITIES INCLUDE SILTATION AND ARE PROJECTED TO JANUARY 2002.
4. SEE SHEETS B-1 THROUGH B-11 FOR BORING LOGS AND INFORMATION.

REVISIONS | SYM. | DESCRIPTION | DATE | APPROVED

DESIGNED & ENGINEERED BY: LANTDIV NAVAL FACILITIES ENGINEERING COMMAND

SEAL

APPROVED
ACTIVITY – SATISFACTORY TO
DATE
APPROVED
FOR EFD FOR COMMANDER NAVFAC
1/25/99
DATE

| A/E | EFD |
|---|---|
| DESIGN | PES |
| DRAWN | PES |
| REVIEW | |
| QC | |
| CHIEF ARCH./ ENGR. | |
| PROJECT MANAGER | DWB |
| FIRE PROTECTION | DWR |
| BRANCH MANAGER | |
| DESIGN DIRECTOR | |

DEPARTMENT OF THE NAVY
NAVAL STATION
ATLANTIC DIVISION
NAVAL FACILITIES ENGINEERING COMMAND
NORFOLK, VIRGINIA

NAVAL STATION
NORFOLK, VA.

# PIER 2 REPLACEMENT

DREDGING DETAILS

| | |
|---|---|
| CODE ID. NO. 80091 | SIZE D |
| SCALE: NONE | |
| EFD NO. 493925 | |
| STA. PROJ. NO. P-355 | |
| SPEC. NO. 05-97-7041 | |
| CONSTR. CONTR. NO. N62470-97-B-7041 | |
| NAVFAC DRAWING NO. 4393925 | |
| SHEET 35 OF 240 | |

C-33

8 7 6 5 4 3 2 1

DRAWFORM REVISION 27 JULY 98

D C B A

FILENAME: 7041C033.DWG, PLOT SCALE: 1=1, SAVED ON 01/08/99 AT 07:59, XREFS: NONE

## GENERAL NOTES:

1. THE DATA ON SHEETS CS-1 THROUGH CS-6 ARE FOR INFORMATION AND DEMOLITION PURPOSES. THE SPECIFIC UNDERWATER OBJECTS (I.E., ANOMALIES, IMAGES, AND DEBRIS) INDICATED ON THESE SHEETS SHALL BE REMOVED BY THE CONTRACTOR AND INCLUDED IN THE CONTRACT PRICE. REMOVAL OF UNDERWATER OBJECTS NOT SPECIFICALLY IDENTIFIED ON THE DEMOLITION SHEETS (C-4 THROUGH C-11) AND THE SIDE-SCAN SONAR & MAGNETOMETER SURVEY SHEETS (CS-1 THROUGH CS-6) SHALL BE IN ACCORDANCE WITH THE "UNFORESEEN SITE CONDITIONS" CLAUSE OF THE CONTRACT.
2. VARIOUS DEBRIS IS SCATTERED AROUND THE ENTIRE PERIMETER OF THE CONCRETE STRUCTURE, MOST PIECES ARE SMALLER THAN 2-3 METERS LONG AND 1-2 METERS WIDE.
3. SURVEY CONDUCTED ON OCTOBER 1, 1997, BY DOLAN RESEARCH, INC.
4. SOUNDINGS WERE TAKEN USING A RECORDING FATHOMETER OPERATING AT 208KHz AND A DIFFERENTIAL GLOBAL POSITIONING SYSTEM (DGPS) WAS USED TO OBTAIN HORIZONTAL POSITIONS.
5. SOUNDINGS ARE IN METERS REFERRED TO NORFOLK NAVAL STATION DATUM AND WERE TAKEN ON OCTOBER 1, 1997, BY WATERWAY SURVEYS & ENGINEERING, LTD.
6. TIDES WERE OBTAINED FROM THE SEWELLS POINT PRIMARY TIDE STATION AND CONVERTED TO NAVAL STATION VERTICAL DATUM.
7. COORDINATES ARE METERS REFERRED TO THE VIRGINIA STATE GRID (SOUTH ZONE) BASED ON NAD83.
8. THE SOUNDINGS SHOWN ON SHEETS CS-1 THROUGH CS-6 ARE NOT TO BE USED FOR DREDGING PURPOSES OR TO DETERMINE DREDGED QUANTITIES.

## SPECIFIC NOTES:

MAGNETIC ANOMALIES:
M75 = 60 GAMMAS, POSITIVE MONOPOLAR, DETECTED OVER 5 SAMPLES INTERVALS, FERROUS MASS IS ESTIMATED WITH SOURCE OBJECT TO BE LESS THAN 250 POUNDS
M109 = 163 GAMMAS, DIPOLAR, DETECTED OVER 6 SAMPLE INTERVALS, FERROUS MASS IS ESTIMATED WITH SOURCE OBJECT TO BE LESS THAN 500 POUNDS
M116 = 457 GAMMAS, DIPOLAR, DETECTED OVER 7 SAMPLE INTERVALS, APPROX. 3-4 METERS LONG BY 30 CENTIMETERS WIDE

SONAR IMAGES/OBSTRUCTIONS:
S11 = ISOLATED LINEAR OBJECT, LYING FLAT ON THE BOTTOM, APPROX. 3 METERS LONG
S13 = IRREGULARLY SHAPED OBJECT, APPROX. 3-4 METERS LONG WITH PORTIONS THAT EXTEND 1 METER OFF THE BOTTOM; ASSOCIATED WITH MAGNETIC ANOMALY M116
S14 = PART OF THE PRESENT DOLPHIN HAS FALLEN AWAY AND IS LYING FLAT ON THE BOTTOM NEXT TO THE STANDING PORTION OF THE STRUCTURE
S26 = ISOLATED IRREGULARLY SHAPED OBJECT, EXTENDING APPROX. 1.5 METERS OFF THE BOTTOM
S27 = ISOLATED IRREGULARLY SHAPED OBJECT, EXTENDING APPROX. 1 METER OFF THE BOTTOM

DIAGRAM OF DATUM PLANE
FOR NORFOLK NAVAL STATION
(NOT TO SCALE)

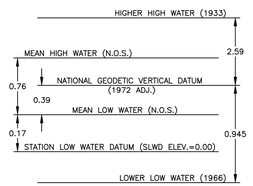


GRAPHIC SCALE
( IN METERS )
6 0 3 6 12 18 24 30
1 : 300

| REVISIONS | | | |
|---|---|---|---|
| SYM | DESCRIPTION | DATE | APPROVED |

DESIGNED & ENGINEERED BY:
LANTDIV
NAVAL FACILITIES ENGINEERING COMMAND

SEAL

APPROVED
ACTIVITY – SATISFACTORY TO
DATE
APPROVED
FOR EFD FOR COMMANDER NAVFAC
1/25/99
DATE

| A/E | EFD |
|---|---|
| PWC DESIGN | |
| PWC DRAWN | |
| PWC REVIEW | JSC |
| QC | |
| COLE CHIEF ARCH./ ENGR. | |
| PROJECT MANAGER | DWB |
| FIRE PROTECTION | DWB |
| BRANCH MANAGER | |
| DESIGN DIRECTOR | |

PWC NORVA

Baker
Waterway
Surveys & Engineering, Ltd.
Virginia Beach, Virginia

DEPARTMENT OF THE NAVY
NAVAL FACILITIES ENGINEERING COMMAND
ATLANTIC DIVISION
NAVAL STATION NORFOLK, VIRGINIA

# PIER 2 REPLACEMENT

SIDE SCAN SONAR AND MAGNETOMETER SURVEY (1 OF 6)

| | |
|---|---|
| CODE ID. NO. 80091 | SIZE D |
| SCALE: | 1:300 |
| EFD NO. | 493926 |
| STA. PROJ. NO. | P-355 |
| SPEC. NO. | 05-97-7041 |
| CONSTR. CONTR. NO. | N62470-97-B-7041 |
| NAVFAC DRAWING NO. | 4393926 |
| SHEET | 36 OF 240 |

CS-1

DRAWFORM REVISION 27 JULY 98

FILENAME: 7041CS01.DWG, PLOT SCALE: 1" = 3', SAVED ON 01/07/99 AT 12:40, XREFS: NONE

E 3,693,000

E 3,693,100

E 3,693,200

N 1,070,100

N 1,070,000

MATCHLINE SHEET CS-3

MATCHLINE SHEET CS-1

MATCHLINE SHEET CS-5

S27

M75

— FOR NOTES SEE SHEET CS-1 —

GRAPHIC SCALE

( IN METERS )

6 0 3 6 12 18 24 30

1 : 300

| REVISIONS | | | |
|---|---|---|---|
| SYM | DESCRIPTION | DATE | APPROVED |

DESIGNED & ENGINEERED BY:
LANTDIV
NAVAL FACILITIES ENGINEERING COMMAND

SEAL

APPROVED

ACTIVITY – SATISFACTORY TO

DATE

APPROVED
FOR EFD FOR COMMANDER NAVFAC
1/25/99

DATE

| A/E | EFD |
|---|---|
| PWC DESIGN | |
| PWC DRAWN | |
| PWC REVIEW | JSC |
| QC | |
| COLE CHIEF ARCH./ ENGR. | |
| PROJECT MANAGER | DWB |
| FIRE PROTECTION | DWR |
| BRANCH MANAGER | |
| DESIGN DIRECTOR | |

DEPARTMENT OF THE NAVY
NAVAL STATION
ATLANTIC DIVISION
NAVAL FACILITIES ENGINEERING COMMAND
NORFOLK, VIRGINIA

NAVAL STATION NORFOLK, VIRGINIA

# PIER 2 REPLACEMENT

SIDE SCAN SONAR AND MAGNETOMETER SURVEY (2 OF 6)

PWC NORVA

Baker

Waterway Surveys & Engineering, Ltd.
Virginia Beach, Virginia

| | |
|---|---|
| CODE ID. NO. 80091 | SIZE D |
| SCALE: 1:300 | |
| EFD NO. 493927 | |
| STA. PROJ. NO. P-355 | |
| SPEC. NO. 05-97-7041 | |
| CONSTR. CONTR. NO. N62470-97-B-7041 | |
| NAVFAC DRAWING NO. 4393927 | |
| SHEET 37 OF 240 | |

CS-2

DRAWFORM REVISION 27 JULY 98

FILENAME: 7041CS02.DWG, PLOT SCALE: 1" = 0', SAVED ON 01/07/99 AT 12:40, XREFS: NONE

N

HAMPTON ROADS
15.2 METERS DEEP CHANNEL

LIMITS OF FEDERAL PROJECT CHANNEL (TOE)

FLOOD
EBB

N 1,070,100

N 1,070,000

E 3,692,800

E 3,692,900

MATCHLINE SHEET CS-4

MATCHLINE SHEET CS-2

– FOR NOTES SEE SHEET CS-1 –

GRAPHIC SCALE
( IN METERS )
6 0 3 6 12 18 24 30

1 : 300

PWC
NORVA

Baker
Waterway
Surveys & Engineering, Ltd.
Virginia Beach, Virginia

| REVISIONS | | | |
|---|---|---|---|
| SYM | DESCRIPTION | DATE | APPROVED |

DESIGNED & ENGINEERED BY:
LANTDIV
NAVAL FACILITIES ENGINEERING COMMAND

SEAL

APPROVED
ACTIVITY – SATISFACTORY TO
DATE
APPROVED
FOR EFD FOR COMMANDER NAVFAC
1/25/99
DATE

| A/E | EFD |
|---|---|
| PWC DESIGN | |
| PWC DRAWN | |
| PWC REVIEW | JSC |
| QC | |
| COLE CHIEF | ARCH./ ENGR. |
| PROJECT MANAGER | DWB |
| FIRE PROTECTION | DWR |
| BRANCH MANAGER | PTB |
| DESIGN DIRECTOR | |

DEPARTMENT OF THE NAVY
NAVAL FACILITIES ENGINEERING COMMAND
NORFOLK, VIRGINIA
ATLANTIC DIVISION
NAVAL STATION NORFOLK, VIRGINIA

# PIER 2 REPLACEMENT

SIDE SCAN SONAR AND MAGNETOMETER SURVEY (3 OF 6)

| | |
|---|---|
| CODE ID. NO. 80091 | SIZE D |
| SCALE: 1:300 | |
| EFD NO. 493928 | |
| STA. PROJ. NO. P-355 | |
| SPEC. NO. 05-97-7041 | |
| CONSTR. CONTR. NO. N62470-97-B-7041 | |
| NAVFAC DRAWING NO. 4393928 | |
| SHEET 38 OF 240 | |

CS-3

DRAWFORM REVISION 27 JULY 98

FILENAME: 7041CS03.DWG; PLOT SCALE: 1" = 0', SAVED ON 01/07/99 AT 12:41, XREFS: NONE

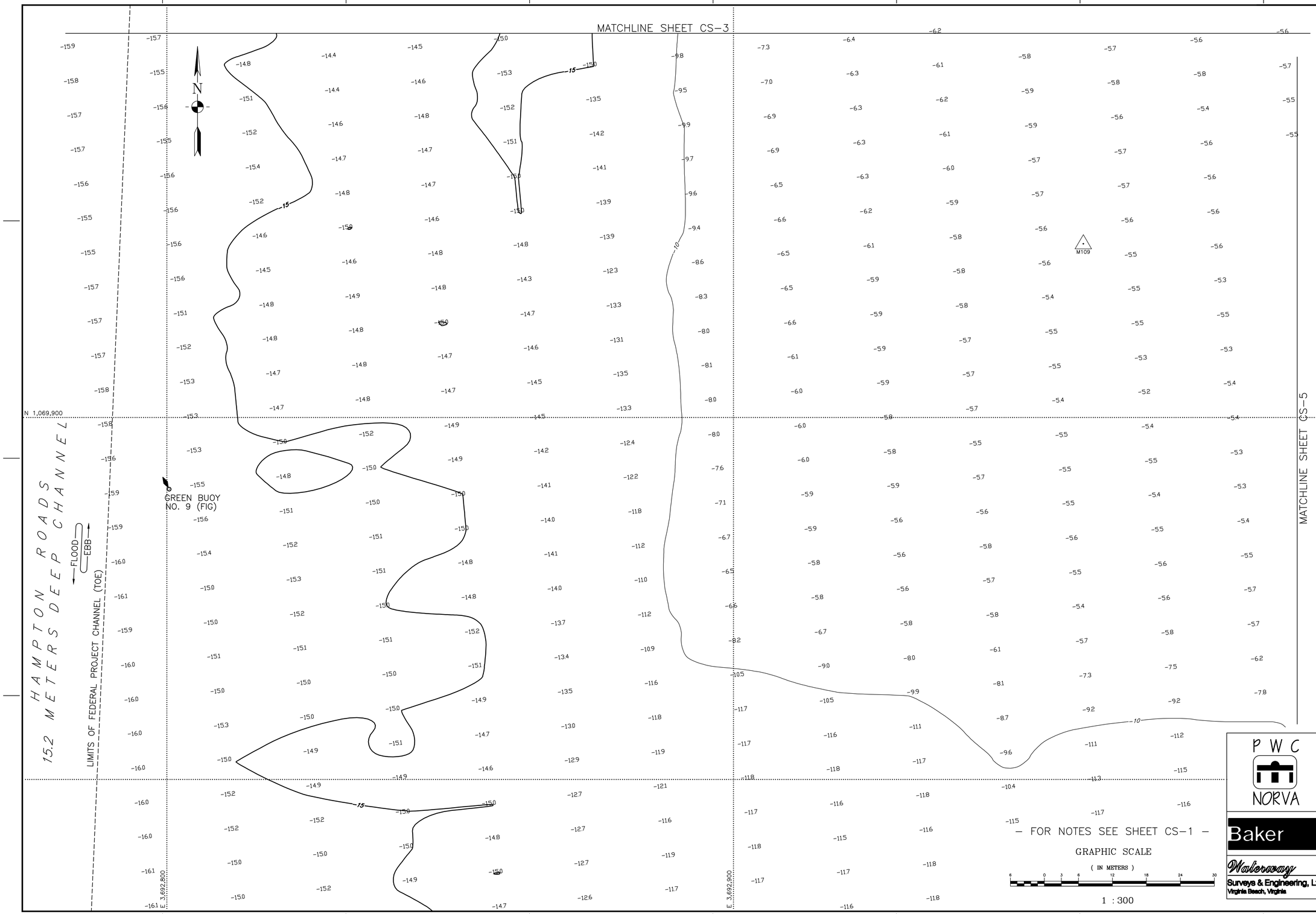


– FOR NOTES SEE SHEET CS-1 –

GRAPHIC SCALE

( IN METERS )

6 0 3 6 12 18 24 30

1 : 300

PWC NORVA

Baker

Waterway Surveys & Engineering, Ltd.
Virginia Beach, Virginia

REVISIONS

| SYM. | DESCRIPTION | DATE | APPROVED |
|---|---|---|---|

DESIGNED & ENGINEERED BY: LANTDIV NAVAL FACILITIES ENGINEERING COMMAND

SEAL

APPROVED

ACTIVITY – SATISFACTORY TO

DATE

APPROVED

FOR EFD FOR COMMANDER NAVFAC

1/25/99

DATE

| A/E | | EFD |
|---|---|---|
| PWC | DESIGN | |
| PWC | DRAWN | |
| PWC | REVIEW | JSC |
| | QC | |
| COLE | CHIEF ARCH./ ENGR. | |
| PROJECT MANAGER | | DWB |
| FIRE PROTECTION | | DWR |
| BRANCH MANAGER | | PTS |
| DESIGN DIRECTOR | | WJC |

DEPARTMENT OF THE NAVY
NAVAL FACILITIES ENGINEERING COMMAND
ATLANTIC DIVISION
NAVAL STATION NORFOLK, VIRGINIA

NAVAL STATION NORFOLK, VIRGINIA

# PIER 2 REPLACEMENT

SIDE SCAN SONAR AND MAGNETOMETER SURVEY (4 OF 6)

CODE ID. NO. 80091 SIZE D

SCALE: 1:300

EFD NO. 493929

STA. PROJ. NO. P-355

SPEC. NO. 05-97-7041

CONSTR. CONTR. NO. N62470-97-B-7041

NAVFAC DRAWING NO. 4393929

SHEET 39 OF 240

CS-4

FILENAME: 7041CS04.DWG, PLOT SCALE: 1" = 0', SAVED ON 01/07/99 AT 12:41, XREFS: NONE

DRAWFORM REVISION 27 JULY 98

MATCHLINE SHEET CS-2

MATCHLINE SHEET CS-4

MATCHLINE SHEET CS-6

N

N 1,069,900

E 3,693,000

E 3,693,100

E 3,693,200

S11

S13

S14

M116

DOLPHIN

5

10

– FOR NOTES SEE SHEET CS-1 –

GRAPHIC SCALE

( IN METERS )

6 0 3 6 12 18 24 30

1 : 300

PWC NORVA

Baker

Waterway Surveys & Engineering, Ltd.
Virginia Beach, Virginia

REVISIONS

| SYM | DESCRIPTION | DATE | APPROVED |
|---|---|---|---|

DESIGNED & ENGINEERED BY:
LANTDIV
NAVAL FACILITIES ENGINEERING COMMAND

SEAL

APPROVED

ACTIVITY – SATISFACTORY TO

DATE

APPROVED
FOR EFD FOR COMMANDER NAVFAC
1/25/99

DATE

| A/E | | EFD |
|---|---|---|
| PWC | DESIGN | |
| PWC | DRAWN | |
| PWC | REVIEW | JSC |
| | QC | |
| COLE | CHIEF ARCH./ ENGR. | |
| | PROJECT MANAGER | DWB |
| | FIRE PROTECTION | DWR |
| | BRANCH MANAGER | |
| | DESIGN DIRECTOR | |

DEPARTMENT OF THE NAVY
NAVAL STATION
ATLANTIC DIVISION
NAVAL FACILITIES ENGINEERING COMMAND
NORFOLK, VIRGINIA

NAVAL STATION NORFOLK, VIRGINIA

# PIER 2 REPLACEMENT

SIDE SCAN SONAR AND MAGNETOMETER SURVEY (5 OF 6)

| | |
|---|---|
| CODE ID. NO. 80091 | SIZE D |
| SCALE: 1:300 | |
| EFD NO. 493930 | |
| STA. PROJ. NO. P-355 | |
| SPEC. NO. 05-97-7041 | |
| CONSTR. CONTR. NO. N62470-97-B-7041 | |
| NAVFAC DRAWING NO. 4393930 | |
| SHEET 40 OF 240 | |

CS-5

DRAWFORM REVISION 27 JULY 98

FILENAME: 7041CS05.DWG, PLOT SCALE: 1" = 0', SAVED ON 01/07/99 AT 12:42, XREFS: NONE

MATCHLINE SHEET CS-1

CONCRETE REMAINS OF RAILROAD FERRY LANDING

AREA OF BROAD
MAGNETIC DISTURBANCE

CONC.
SLAB

BUILDING
CEP168

PIER POINT PARK
(APPROXIMATE)

MATCHLINE SHEET CS-5

N 1,069,900

E 3,693,300

E 3,693,400

— FOR NOTES SEE SHEET CS-1 —

GRAPHIC SCALE
( IN METERS )
6 0 3 6 12 18 24 30
1 : 300

PWC
NORVA

Baker
Waterway
Surveys & Engineering, Ltd.
Virginia Beach, Virginia

REVISIONS

| SYM | DESCRIPTION | DATE | APPROVED |
|---|---|---|---|

DESIGNED & ENGINEERED BY:
LANTDIV
NAVAL FACILITIES ENGINEERING COMMAND

SEAL

APPROVED
ACTIVITY – SATISFACTORY TO

DATE

APPROVED
FOR EFD FOR COMMANDER NAVFAC
1/25/99

DATE

| A/E | EFD |
|---|---|
| PWC DESIGN | |
| PWC DRAWN | |
| PWC REVIEW | JSC |
| QC | |
| COLE CHIEF ARCH./ ENGR. | |
| PROJECT MANAGER | DWB |
| FIRE PROTECTION | DWR |
| BRANCH MANAGER | |
| DESIGN DIRECTOR | |

DEPARTMENT OF THE NAVY
NAVAL STATION
ATLANTIC DIVISION
NAVAL FACILITIES ENGINEERING COMMAND
NORFOLK, VIRGINIA

NAVAL STATION NORFOLK, VIRGINIA
PIER 2 REPLACEMENT
SIDE SCAN SONAR AND MAGNETOMETER SURVEY (6 OF 6)

| | |
|---|---|
| CODE ID. NO. 80091 | SIZE D |
| SCALE: | 1:300 |
| EFD NO. | 493931 |
| STA. PROJ. NO. | P-355 |
| SPEC. NO. | 05-97-7041 |
| CONSTR. CONTR. NO. | N62470-97-B-7041 |
| NAVFAC DRAWING NO. | 4393931 |
| SHEET | 41 OF 240 |

CS-6

DRAWFORM REVISION 27 JULY 98

FILENAME: 7041CS06.DWG, PLOT SCALE: 1" = 0', SAVED ON 01/07/99 AT 12:44, XREFS: NONE

## BORING NO.1

| CLIENT | JOB # | BORING # | SHEET |
|---|---|---|---|
| UNITED STATES NAVY | N2585 | B-1 | 1 OF 2 |

PROJECT NAME: PIER 2 REPLACEMENT DO-0001
ARCHITECT-ENGINEER: UNITED STATES NAVY
SITE LOCATION: DECATUR AVE., NORFOLK, VIRGINIA

CALIBRATED PENETROMETER Kg/cm2 (1 2 3 4 5+)
PLASTIC LIMIT % | WATER CONTENT % | LIQUID LIMIT %
STANDARD PENETRATION BLOWS/300mm (10 20 30 40 50+)

| DEPTH (FT) | SAMPLE NO. | SAMPLE TYPE | SAMPLE DISTANCE (IN) | RECOVERY (IN) | DESCRIPTION OF MATERIAL | DEPTH (m) | STANDARD PENETRATION BLOWS/300mm |
|---|---|---|---|---|---|---|---|
| | | | | | SURFACE ELEVATION | | |
| 0 | | | | | Water | 1m | |
| 10 | 1 | SS | 24 | 24 | Fine Sandy CLAY, Dark Brown, Hard, (CL) | | 34 |
| | | | | | Silty Fine to Medium SAND, Gray, Wet, Loose, (SM) | | 8 |
| 20 | 3 | SS | 24 | 24 | Silty CLAY, Trace Marine Shell Fragments, Gray, Wet, Soft, (CL) | 5m | 5 |
| | 4 | SS | 24 | 24 | Silty CLAY, Trace Fine Sand and Marine Shell Fragments, Brown, Wet Medium Stiff to Stiff, (CL) [Wood & Organics From 38 to 41.5 Feet] | | 6 |
| 30 | 5 | SS | 24 | 24 | | 10m | 10 |
| 40 | 6 | SS | 24 | 24 | | | 15 |
| | 7 | SS | 24 | 24 | | | 13 |
| 50 | 8 | SS | 24 | 24 | Silty Fine to Medium SAND, Trace Marine Shell Fragments, Gray, Wet, Medium Dense, (SM) | 15m | 15 |
| | 9 | SS | 24 | 24 | | | 15 |
| 60 | 10 | SS | 24 | 24 | | | 14 |
| | 11 | SS | 24 | 24 | | | 20 |

CONTINUED ON NEXT PAGE.

THE STRATIFICATION LINES REPRESENT THE APPROXIMATE BOUNDARY LINES BETWEEN SOIL TYPES IN-SITU THE TRANSITION MAY BE GRADUAL

| | | | |
|---|---|---|---|
| WL WS OR ED | BORING STARTED 10-16-97 | TOPSOIL DEPTH: | |
| WL BCR ACR | BORING COMPLETED 10-16-97 | CAVE IN DEPTH ● | |
| WL | RIG FOREMAN FISHBURNE | DRILLING METHOD WS | |

| CLIENT | JOB # | BORING # | SHEET |
|---|---|---|---|
| UNITED STATES NAVY | N2585 | B-1 | 2 OF 2 |

PROJECT NAME: PIER 2 REPLACEMENT DO-0001
ARCHITECT-ENGINEER: UNITED STATES NAVY
SITE LOCATION: DECATUR AVE., NORFOLK, VIRGINIA

CALIBRATED PENETROMETER Kg/cm2 (1 2 3 4 5+)
PLASTIC LIMIT % | WATER CONTENT % | LIQUID LIMIT %
STANDARD PENETRATION BLOWS/300mm (10 20 30 40 50+)

| DEPTH (FT) | SAMPLE NO. | SAMPLE TYPE | SAMPLE DISTANCE (IN) | RECOVERY (IN) | DESCRIPTION OF MATERIAL | DEPTH (m) | STANDARD PENETRATION BLOWS/300mm |
|---|---|---|---|---|---|---|---|
| | | | | | SURFACE ELEVATION | | |
| 60 | | | | | Silty Fine to Medium SAND, Trace Marine Shell Fragments, Gray, Wet, Medium Dense, (SM) | 20m | |
| | 12 | SS | 24 | 24 | | | 26 |
| 65 | | | | | Clayey Fine SAND, Trace Marine Shell Fragments, Gray, Wet, Medium Dense to Dense, (SC) | | 37 |
| 70 | 13 | SS | 24 | 24 | | | |
| | 14 | SS | 24 | 24 | | | 39 |
| 75 | 15 | SS | 24 | 24 | | | 24 |
| 80 | 16 | SS | 24 | 24 | | 25m | 21 |
| | 17 | SS | 24 | 24 | | | 22 |
| 85 | 18 | SS | 24 | 24 | Fine Sandy CLAY, Gray, Wet, Very Stiff, (CL) | | 19 |
| 90 | 19 | SS | 24 | 24 | | | 24 |
| 95 | 20 | SS | 24 | 24 | | 30m | 23 |
| | 21 | SS | 24 | 24 | | | 19 |
| 110 | | | | | END OF BORING @ 33.5m<br>END OF BORING @ 110.0' | 35m | |
| 115 | | | | | | | |
| 120 | | | | | | | |

THE STRATIFICATION LINES REPRESENT THE APPROXIMATE BOUNDARY LINES BETWEEN SOIL TYPES IN-SITU THE TRANSITION MAY BE GRADUAL

| | | | |
|---|---|---|---|
| WL WS OR ED | BORING STARTED 10-16-97 | TOPSOIL DEPTH: | |
| WL BCR ACR | BORING COMPLETED 10-16-97 | CAVE IN DEPTH ● | |
| WL | RIG FOREMAN FISHBURNE | DRILLING METHOD WS | |

## BORING NO.2

| CLIENT | JOB # | BORING # | SHEET |
|---|---|---|---|
| UNITED STATES NAVY | N2585 | B-2 | 1 OF 2 |

PROJECT NAME: PIER 2 REPLACEMENT DO-0001
ARCHITECT-ENGINEER: UNITED STATES NAVY
SITE LOCATION: DECATUR AVE., NORFOLK, VIRGINIA

CALIBRATED PENETROMETER Kg/cm2 (1 2 3 4 5+)
PLASTIC LIMIT % | WATER CONTENT % | LIQUID LIMIT %
STANDARD PENETRATION BLOWS/300mm (10 20 30 40 50+)

| DEPTH (FT) | SAMPLE NO. | SAMPLE TYPE | SAMPLE DISTANCE (IN) | RECOVERY (IN) | DESCRIPTION OF MATERIAL | DEPTH (m) | STANDARD PENETRATION BLOWS/300mm |
|---|---|---|---|---|---|---|---|
| | | | | | SURFACE ELEVATION | | |
| 0 | | | | | Water | 1m | |
| 10 | 1 | SS | 24 | 24 | Silty CLAY, Trace Fine Sand, Gray, Wet, Very Soft to Soft, (CL) | | 3 |
| | 2 | SS | 24 | 24 | | 5m | 3 |
| 20 | 3 | SS | 24 | 24 | | | 4 |
| 25 | 4 | SS | 24 | 24 | | | 5 |
| 30 | 5 | SS | 24 | 24 | | 10m | 5 |
| 35 | 6 | SS | 24 | 24 | Silty CLAY, Trace Fine Sand, Dark Brown, Wet, Medium Stiff, (CL) | | 8 |
| 40 | 7 | SS | 24 | 24 | | | 7 |
| 45 | 8 | SS | 24 | 24 | Fine Sandy CLAY, With Wood, Gray, Moist, Stiff, (CL) | 15m | 11 |
| 50 | | | | | Fine Sandy CLAY, Gray, Moist, Stiff, (CL) | | |
| | 9 | SS | 24 | 24 | Silty Fine to Medium SAND, Gray, Wet, Medium Dense, (SM) | | 16 |
| 55 | | | | | Clayey Fine to Medium SAND, Trace Marine Shell Fragments, Gray, Wet, Medium Dense to Dense, (SC) | | |
| 60 | 10 | SS | 24 | 24 | | | 20 |

CONTINUED ON NEXT PAGE.

THE STRATIFICATION LINES REPRESENT THE APPROXIMATE BOUNDARY LINES BETWEEN SOIL TYPES IN-SITU THE TRANSITION MAY BE GRADUAL

| | | | |
|---|---|---|---|
| WL WS OR ED | BORING STARTED 10-20-97 | TOPSOIL DEPTH: | |
| WL BCR ACR | BORING COMPLETED 10-20-97 | CAVE IN DEPTH ● | |
| WL | RIG FOREMAN FISHBURNE | DRILLING METHOD WS | |

| CLIENT | JOB # | BORING # | SHEET |
|---|---|---|---|
| UNITED STATES NAVY | N2585 | B-2 | 2 OF 2 |

PROJECT NAME: PIER 2 REPLACEMENT DO-0001
ARCHITECT-ENGINEER: UNITED STATES NAVY
SITE LOCATION: DECATUR AVE., NORFOLK, VIRGINIA

CALIBRATED PENETROMETER Kg/cm2 (1 2 3 4 5+)
PLASTIC LIMIT % | WATER CONTENT % | LIQUID LIMIT %
STANDARD PENETRATION BLOWS/300mm (10 20 30 40 50+)

| DEPTH (FT) | SAMPLE NO. | SAMPLE TYPE | SAMPLE DISTANCE (IN) | RECOVERY (IN) | DESCRIPTION OF MATERIAL | DEPTH (m) | STANDARD PENETRATION BLOWS/300mm |
|---|---|---|---|---|---|---|---|
| | | | | | SURFACE ELEVATION | | |
| 60 | | | | | Clayey Fine to Medium SAND, Trace Marine Shell Fragments, Gray, Wet, Medium Dense to Dense, (SC) | 20m | |
| | 11 | SS | 24 | 24 | | | 24 |
| 65 | | | | | | | |
| 70 | 12 | SS | 24 | 24 | | | 31 |
| | 13 | SS | 24 | 24 | | | 12 |
| 75 | 14 | SS | 24 | 24 | | | 16 |
| 80 | 15 | SS | 24 | 24 | Fine Sandy CLAY, Trace Marine Shell Fragments, Gray, Wet, Stiff, (CL) | 25m | 15 |
| | 16 | SS | 24 | 24 | Clayey Fine to Medium SAND, Trace Marine Shell Fragments to 100 Feet, Gray, Wet, Medium Dense, (SC) | | 16 |
| 85 | | | | | | | |
| 90 | 17 | SS | 24 | 24 | | | 18 |
| 95 | 18 | SS | 24 | 24 | | 30m | 20 |
| | 19 | SS | 24 | 24 | | | 18 |
| 105 | | | | | | | |
| 110 | 20 | SS | 24 | 24 | END OF BORING @ 33.5m<br>END OF BORING @ 110.0' | 35m | 17 |
| 115 | | | | | | | |
| 120 | | | | | | | |

THE STRATIFICATION LINES REPRESENT THE APPROXIMATE BOUNDARY LINES BETWEEN SOIL TYPES IN-SITU THE TRANSITION MAY BE GRADUAL

| | | | |
|---|---|---|---|
| WL WS OR ED | BORING STARTED 10-20-97 | TOPSOIL DEPTH: | |
| WL BCR ACR | BORING COMPLETED 10-20-97 | CAVE IN DEPTH ● | |
| WL | RIG FOREMAN FISHBURNE | DRILLING METHOD WS | |

REVISIONS

| SYM | DESCRIPTION | DATE | APPROVED |
|---|---|---|---|

DESIGNED & ENGINEERED BY: LANTDIV NAVAL FACILITIES ENGINEERING COMMAND

APPROVED
ACTIVITY - SATISFACTORY TO
DATE
APPROVED
FOR EFD FOR COMMANDER NAVFAC
1/25/99
DATE

| A/E | EFD |
|---|---|
| DESIGN | DGB |
| DRAWN | MBS |
| REVIEW | KAN |
| QC | |
| CHIEF ARCH./ ENGR. | |
| PROJECT MANAGER | DWB |
| FIRE PROTECTION | DWR |
| BRANCH MANAGER | KAN |
| DESIGN DIRECTOR | |

SEAL

DEPARTMENT OF THE NAVY
NAVAL FACILITIES ENGINEERING COMMAND
ATLANTIC DIVISION
NAVAL STATION
NORFOLK, VIRGINIA
PIER 2 REPLACEMENT
BORINGS 1 AND 2

| | |
|---|---|
| CODE ID. NO. 80091 | SIZE D |
| SCALE: NONE | |
| EFD NO. 493959 | |
| STA. PROJ. NO. P-355 | |
| SPEC. NO. 05-97-7041 | |
| CONSTR. CONTR. NO. N62470-97-B-7041 | |
| NAVFAC DRAWING NO. 439359 | |
| SHEET 69 OF 240 | |

B-1

DRAWFORM REVISION 27 JULY 98

FILENAME: 7041B1.DWG, PLOT SCALE: 1" = 1', SAVED ON 01/11/99 AT 09:38, XREFS: NONE

8 7 6 5 4 3 2 1

D C B A

## BORING NO.3

CLIENT: UNITED STATES NAVY | JOB #: N2585 | BORING #: B-3 | SHEET: 1 OF 2
PROJECT NAME: PIER 2 REPLACEMENT DO-0001 | ARCHITECT-ENGINEER: UNITED STATES NAVY
SITE LOCATION: DECATUR AVE., NORFOLK, VIRGINIA

| DEPTH (FT) | SAMPLE NO. | SAMPLE TYPE | SAMPLE DISTANCE (IN) | RECOVERY (IN) | DESCRIPTION OF MATERIAL | DEPTH (m) | CALIBRATED PENETROMETER Kg/cm2 (1 2 3 4 5+) | PLASTIC LIMIT % | WATER CONTENT % | LIQUID LIMIT % | STANDARD PENETRATION BLOWS/300mm (10 20 30 40 50+) |
|---|---|---|---|---|---|---|---|---|---|---|---|
| | | | | | SURFACE ELEVATION | | | | | | |
| 0 | | | | | Water | 1m | | | | | |
| 5 | | | | | | | | | | | |
| 10 | | | | | | | | | | | |
| 15 | 1 | SS | 24 | 24 | Silty CLAY, Gray, Wet, Very Soft, (CH) | 5m | | | | | WOH |
| 20 | 2 | SS | 24 | 24 | | | | | | | WOH |
| 25 | 3 | SS | 24 | 24 | | | | | | | 2 |
| 30 | 4 | SS | 24 | 24 | | 10m | | | | | 1 |
| 35 | 5 | SS | 24 | 24 | Silty CLAY, BROWN, WET, MEDIUM STIFF, (CH) [WOOD AND ORGANICE AT 39 FEET] | | | | | | 6 |
| 40 | 6 | SS | 24 | 24 | CLAYEY FINE TO MEDIUM SAND, TEACE SILT, GRAY, WET, MEDIUM DENSE, (SC) | | | | | | 10 |
| 45 | 7 | SS | 24 | 24 | SILTY FINE TO COARSE SAND, WITH MARINE SHELL FRAGMENTS, GRAY, WET, LOOSE, (SM) | | | | | | 6 |
| 50 | 8 | SS | 24 | 24 | SILTY FINE TO MEDIUM SAND, TRACE MARINE SHELL FRAGMENTS, GRAY, WET, MEDIUM DENSE, (SM) | 15m | | | | | 15 |
| 55 | 9 | SS | 24 | 24 | SILTY FINE SAND, TRACE MARINE SHELL FRAGMENTS, GRAY, SATURATED, VERY LOOSE TO MEDIUM DENSE, (SM) | | | | | | WOH |
| 60 | 10 | SS | 24 | 24 | | | | | | | 12 |

CONTINUED ON NEXT PAGE.

THE STRATIFICATIION LINES REPRESENT THE APPROXIMATE BOUNDARY LINES BETWEEN SOIL TYPES IN-SITU THE TRANSITION MAY BE GRADUAL

| | | | | | |
|---|---|---|---|---|---|
| WL | | WS OR FD | BORING STARTED | 10-21-97 | TOPSOIL DEPTH: |
| WL | BCR | ACR | BORING COMPLETED | 10-21-97 | CAVE IN DEPTH ⊕ |
| WL | | | RIG | FOREMAN FISHBURNE | DRILLING METHOD WS |

CLIENT: UNITED STATES NAVY | JOB #: N2585 | BORING #: B-3 | SHEET: 2 OF 2
PROJECT NAME: PIER 2 REPLACEMENT DO-0001 | ARCHITECT-ENGINEER: UNITED STATES NAVY
SITE LOCATION: DECATUR AVE., NORFOLK, VIRGINIA

| DEPTH (FT) | SAMPLE NO. | SAMPLE TYPE | SAMPLE DISTANCE (IN) | RECOVERY (IN) | DESCRIPTION OF MATERIAL | DEPTH (m) | CALIBRATED PENETROMETER Kg/cm2 (1 2 3 4 5+) | PLASTIC LIMIT % | WATER CONTENT % | LIQUID LIMIT % | STANDARD PENETRATION BLOWS/300mm (10 20 30 40 50+) |
|---|---|---|---|---|---|---|---|---|---|---|---|
| | | | | | SURFACE ELEVATION | | | | | | |
| 60 | | | | | SILTY FINE SAND, TRACE MARINE SHELL FRAGMENTS, GRAY, SATURATED, VERY LOOSE TO MEDIUM DENSE, (SM) | 20m | | | | | |
| 65 | 11 | SS | 24 | 24 | | | | | | | 16 |
| 70 | 12 | SS | 24 | 24 | | | | | | | 16 |
| 75 | 13 | SS | 24 | 24 | CLAYEY FINE TO MEDOUM SAND, TRACE MARINE SHELL FRAGMENTS, GRAY, WET, MEDIUN DENSE, (SC) | | | | | | 18 |
| 80 | 14 | SS | 24 | 24 | | 25m | | | | | 18 |
| 85 | 15 | SS | 24 | 24 | | | | | | | 19 |
| 90 | 16 | SS | 24 | 24 | | | | | | | 19 |
| | 17 | SS | 1 | 1 | END OF BORING @ 90.0' (27.4m) | | | | | | 50/1" |

AUGER REFUSAL @ 92,1' (28.1m)

## BORING NO.4

CLIENT: UNITED STATES NAVY | JOB #: N2585 | BORING #: B-4 | SHEET: 1 OF 2
PROJECT NAME: PIER 2 REPLACEMENT DO-0001 | ARCHITECT-ENGINEER: UNITED STATES NAVY
SITE LOCATION: DECATUR AVE., NORFOLK, VIRGINIA

| DEPTH (FT) | SAMPLE NO. | SAMPLE TYPE | SAMPLE DISTANCE (IN) | RECOVERY (IN) | DESCRIPTION OF MATERIAL | DEPTH (m) | CALIBRATED PENETROMETER Kg/cm2 (1 2 3 4 5+) | PLASTIC LIMIT % | WATER CONTENT % | LIQUID LIMIT % | STANDARD PENETRATION BLOWS/300mm (10 20 30 40 50+) |
|---|---|---|---|---|---|---|---|---|---|---|---|
| | | | | | SURFACE ELEVATION | | | | | | |
| 0 | | | | | Water | 1m | | | | | |
| 5 | | | | | | | | | | | |
| 10 | | | | | | | | | | | |
| 15 | 1 | SS | 24 | 24 | SILTY CLAY, BROWN AND DARK GRAY, WET TO SATURATED,VERY SOFT, (CH) (CH) | 5m | | | | | WOH |
| 20 | 2 | SS | 24 | 24 | | | | | | | 2 |
| 25 | 3 | SS | 24 | 24 | SILTY CLAY, DARK BROWN, WET TO SATURATED, SOFT TO MEDIUM STIFF (CH) | | | | | | 5 |
| 30 | 4 | SS | 24 | 24 | | 10m | | | | | 6 |
| 35 | 5 | SS | 24 | 24 | Fine to Medium Sandy CLAY, With Wood Fragments, Gray, Wet to Saturated, Medium Stiff, (CL) | | | | | | 6 |
| 40 | 6 | SS | 24 | 24 | Silty Fine SAND, Trace Clay and Marine Shell Fragments, Gray, Wet to Saturated, Medium Dense, (SM) | | | | | | 13 |
| 45 | 7 | SS | 24 | 24 | | 15m | | | | | 17 |
| 50 | 8 | SS | 24 | 24 | | | | | | | 22 |
| 55 | 9 | SS | 24 | 24 | Fine Sandy SILT, Trace Marine Shell Fragments, Gray, Wet to Saturated, Medium Dense, (SM-ML) | | | | | | 17 |
| 60 | | | | | | | | | | | |

CONTINUED ON NEXT PAGE.

THE STRATIFICATIION LINES REPRESENT THE APPROXIMATE BOUNDARY LINES BETWEEN SOIL TYPES IN-SITU THE TRANSITION MAY BE GRADUAL

| | | | | | |
|---|---|---|---|---|---|
| WL | | WS OR FD | BORING STARTED | 10-22-97 | TOPSOIL DEPTH: |
| WL | BCR | ACR | BORING COMPLETED | 10-22-97 | CAVE IN DEPTH ⊕ |
| WL | | | RIG | FOREMAN FISHBURNE | DRILLING METHOD WS |

CLIENT: UNITED STATES NAVY | JOB #: N2585 | BORING #: B-4 | SHEET: 2 OF 2
PROJECT NAME: PIER 2 REPLACEMENT DO-0001 | ARCHITECT-ENGINEER: UNITED STATES NAVY
SITE LOCATION: DECATUR AVE., NORFOLK, VIRGINIA

| DEPTH (FT) | SAMPLE NO. | SAMPLE TYPE | SAMPLE DISTANCE (IN) | RECOVERY (IN) | DESCRIPTION OF MATERIAL | DEPTH (m) | CALIBRATED PENETROMETER Kg/cm2 (1 2 3 4 5+) | PLASTIC LIMIT % | WATER CONTENT % | LIQUID LIMIT % | STANDARD PENETRATION BLOWS/300mm (10 20 30 40 50+) |
|---|---|---|---|---|---|---|---|---|---|---|---|
| | | | | | SURFACE ELEVATION | | | | | | |
| 60 | | | | | Fine Sandy SILT, Trace Marine Shell Fragments, Gray, Wet to Saturated, Medium Dense, (SM-ML) | 20m | | | | | |
| 65 | 10 | SS | 24 | 24 | | | | | | | 18 |
| 70 | 11 | SS | 24 | 24 | | | | | | | 19 |
| 75 | 12 | SS | 24 | 24 | | | | | | | 21 |
| 80 | 13 | SS | 24 | 24 | Fine Sandy and Silty CLAY, Trace Marine Shell Fragments, Gray, Wet to Saturated, Very Stiff, (CL) | 25m | | | | | 16 |
| 85 | 14 | SS | 24 | 24 | | | | | | | 16 |
| 90 | 15 | SS | 24 | 24 | Silty Fine SAND, Trace Marine Shell Fragments, Gray, Wet to Saturated, Medium Dense, (SM-ML) | | | | | | 20 |
| 95 | 16 | SS | 24 | 24 | | | | | | | 20 |
| 100 | 17 | SS | 24 | 24 | | 30m | | | | | 17 |
| 105 | 18 | SS | 24 | 24 | | | | | | | 16 |
| 110 | 19 | SS | 24 | 24 | Fine Sandy CLAY, Trace Silt and Marine Shell Fragments, Gray, Wet to Saturated, Very Stiff, (CL) | | | | | | 18 |
| 115 | | | | | END OF BORING @ 110.0' (33.5m) | | | | | | |
| 120 | | | | | | | | | | | |

THE STRATIFICATIION LINES REPRESENT THE APPROXIMATE BOUNDARY LINES BETWEEN SOIL TYPES IN-SITU THE TRANSITION MAY BE GRADUAL

| | | | | | |
|---|---|---|---|---|---|
| WL | | WS OR FD | BORING STARTED | 10-22-97 | TOPSOIL DEPTH: |
| WL | BCR | ACR | BORING COMPLETED | 10-22-97 | CAVE IN DEPTH ⊕ |
| WL | | | RIG | FOREMAN FISHBURNE | DRILLING METHOD WS |

REVISIONS

| SYM | DESCRIPTION | DATE | APPROVED |
|---|---|---|---|

DESIGNED & ENGINEERED BY: LANTDIV NAVAL FACILITIES ENGINEERING COMMAND

APPROVED
ACTIVITY - SATISFACTORY TO
DATE
APPROVED
FOR EFD FOR COMMANDER NAVFAC
1/25/99
DATE

| A/E | EFD |
|---|---|
| DESIGN | DGB |
| DRAWN | MBS |
| REVIEW | KAN |
| QC | |
| CHIEF ARCH./ ENGR. | |
| PROJECT MANAGER | DWB |
| FIRE PROTECTION | DWB |
| BRANCH MANAGER | KAN |
| DESIGN DIRECTOR | |

DEPARTMENT OF THE NAVY
NAVAL STATION
ATLANTIC DIVISION
NAVAL FACILITIES ENGINEERING COMMAND
NORFOLK, VIRGINIA

# PIER 2 REPLACEMENT

BORINGS 3 AND 4

| | |
|---|---|
| CODE ID. NO. 80091 | SIZE D |
| SCALE: | NONE |
| EFD NO. | 493960 |
| STA. PROJ. NO. | P-355 |
| SPEC. NO. | 05097-7041 |
| CONSTR. CONTR. NO. | N62470-97-B-7041 |
| NAVFAC DRAWING NO. | 439360 |
| SHEET | 70 OF 240 |

B-2

DRAWFORM REVISION 27 JULY 98

FILENAME: 7041B2.DWG, PLOT SCALE: 1" = 1', SAVED ON 01/11/99 AT 09:45, XREFS: NONE

8 7 6 5 4 3 2 1
D C B A

## BORING NO.5

CLIENT: UNITED STATES NAVY | JOB #: N2585 | BORING #: B-5 | SHEET: 1 OF 2
PROJECT NAME: PIER 2 REPLACEMENT DO-0001 | ARCHITECT-ENGINEER: UNITED STATES NAVY
SITE LOCATION: DECATUR AVE., NORFOLK, VIRGINIA

| DEPTH (FT) | SAMPLE NO. | SAMPLE TYPE | SAMPLE DISTANCE (IN) | RECOVERY (IN) | DESCRIPTION OF MATERIAL | DEPTH (m) | CALIBRATED PENETROMETER Kg/cm2 | PLASTIC LIMIT % | WATER CONTENT % | LIQUID LIMIT % | STANDARD PENETRATION BLOWS/300mm |
|---|---|---|---|---|---|---|---|---|---|---|---|
| | | | | | SURFACE ELEVATION | | | | | | |
| 0 | | | | | Water | | | | | | |
| 5 | | | | | | 1m | | | | | |
| 10 | | | | | | 5m | | | | | |
| 15 | | | | | | | | | | | |
| 20 | 1 | SS | 24 | 24 | Silty CLAY, Brown and Gray, Wet to Saturated, Very Soft, (CH) | | | | | | WOH |
| 25 | 2 | SS | 24 | 24 | | | | | | | WOH |
| 30 | 3 | SS | 24 | 24 | | | | | | | 1 |
| 35 | 4 | SS | 24 | 24 | Silty CLAY, With Wood, Brown, Wet to Saturated, Very Soft, (CL) | 10m | | | | | 2 |
| 40 | 5 | SS | 24 | 24 | Silty Fine to Medium SAND, Gray, Wet to Saturated, Medium Dense, (SM) | | | | | | 16 |
| 45 | 6 | SS | 24 | 24 | Fine to Medium SAND, With Marine Shell Fragments, Trace Coarse Gravel, Gray, Wet to Saturated, Medium Dense, (SM) | | | | | | 25 |
| 50 | 7 | SS | 24 | 24 | FINE SANDY SILT, TRACE MARINE SHELL FRAGMENTS, GRAY, WET TO SATURATED, MEDIUM DENSE, (SM-ML) | 15m | | | | | 16 |
| 55 | 8 | SS | 24 | 24 | | | | | | | 12 |
| 60 | 9 | SS | 24 | 24 | | | | | | | 18 |

CONTINUED ON NEXT PAGE.

THE STRATIFICATION LINES REPRESENT THE APPROXIMATE BOUNDARY LINES BETWEEN SOIL TYPES IN-SITU THE TRANSITION MAY BE GRADUAL

| | | | |
|---|---|---|---|
| WL | WS OR ▽ | BORING STARTED 10-23-97 | TOPSOIL DEPTH: |
| WL BCR ACR | | BORING COMPLETED 10-23-97 | CAVE IN DEPTH ⊗ |
| WL | RIG | FOREMAN FISHBURNE | DRILLING METHOD WS |

CLIENT: UNITED STATES NAVY | JOB #: N2585 | BORING #: B-5 | SHEET: 2 OF 2
PROJECT NAME: PIER 2 REPLACEMENT DO-0001 | ARCHITECT-ENGINEER: UNITED STATES NAVY
SITE LOCATION: DECATUR AVE., NORFOLK, VIRGINIA

| DEPTH (FT) | SAMPLE NO. | SAMPLE TYPE | SAMPLE DISTANCE (IN) | RECOVERY (IN) | DESCRIPTION OF MATERIAL | DEPTH (m) | CALIBRATED PENETROMETER Kg/cm2 | PLASTIC LIMIT % | WATER CONTENT % | LIQUID LIMIT % | STANDARD PENETRATION BLOWS/mm |
|---|---|---|---|---|---|---|---|---|---|---|---|
| | | | | | SURFACE ELEVATION | | | | | | |
| 60 | | | | | FINE SANDY SILT, TRACE MARINE SHELL FRAGMENTS, GRAY, WET TO SATURATED, MEDIUM DENSE, (SM-ML) | | | | | | |
| 65 | 10 | SS | 24 | 24 | | 20m | | | | | 16 |
| 70 | 11 | SS | 24 | 24 | | | | | | | 16 |
| 75 | 12 | SS | 24 | 24 | | | | | | | 16 |
| 80 | 13 | SS | 24 | 24 | Fine Sandy SILT, With Clayey Lenses From 77 to 85 Feet, Gray, Wet to Saturated, Medium Dense, (SM-ML) | | | | | | 15 |
| 85 | 14 | SS | 24 | 24 | | 25m | | | | | 18 |
| 90 | 15 | SS | 24 | 24 | | | | | | | 16 |
| 95 | 16 | SS | 24 | 24 | Fine Sandy SILT, With Clayey Lenses From 98 to 110 Feet, Gray, Wet to Saturated, Medium Dense, (SM-ML) | 30m | | | | | 17 |
| 100 | 17 | SS | 24 | 24 | | | | | | | 16 |
| 105 | 18 | SS | 24 | 24 | | | | | | | 20 |
| 110 | 19 | SS | 24 | 24 | END OF BORING @ 110.0' (33.5m) | 35m | | | | | 16 |
| 115 | | | | | | | | | | | |
| 120 | | | | | | | | | | | |

THE STRATIFICATION LINES REPRESENT THE APPROXIMATE BOUNDARY LINES BETWEEN SOIL TYPES IN-SITU THE TRANSITION MAY BE GRADUAL

| | | | |
|---|---|---|---|
| WL | WS OR ▽ | BORING STARTED 10-23-97 | TOPSOIL DEPTH: |
| WL BCR ACR | | BORING COMPLETED 10-23-97 | CAVE IN DEPTH ⊗ |
| WL | RIG | FOREMAN FISHBURNE | DRILLING METHOD WS |

## BORING NO.6

CLIENT: UNITED STATES NAVY | JOB #: N2585 | BORING #: B-6 | SHEET: 1 OF 2
PROJECT NAME: PIER 2 REPLACEMENT DO-0001 | ARCHITECT-ENGINEER: UNITED STATES NAVY
SITE LOCATION: DECATUR AVE., NORFOLK, VIRGINIA

| DEPTH (FT) | SAMPLE NO. | SAMPLE TYPE | SAMPLE DISTANCE (IN) | RECOVERY (IN) | DESCRIPTION OF MATERIAL | DEPTH (m) | CALIBRATED PENETROMETER Kg/cm2 | PLASTIC LIMIT % | WATER CONTENT % | LIQUID LIMIT % | STANDARD PENETRATION BLOWS/mm |
|---|---|---|---|---|---|---|---|---|---|---|---|
| | | | | | SURFACE ELEVATION | | | | | | |
| 0 | | | | | Water | | | | | | |
| 5 | | | | | | 1m | | | | | |
| 10 | | | | | | 5m | | | | | |
| 15 | | | | | | | | | | | |
| 20 | 1 | SS | 24 | 24 | Silty CLAY, Brown and Gray, Wet to Saturated, Very Soft, (CH) | | | | | | WOH |
| 25 | 2 | SS | 24 | 24 | | | | | | | WOH |
| 30 | 3 | SS | 24 | 24 | | | | | | | WOH |
| 35 | 4 | SS | 24 | 24 | | 10m | | | | | WOH |
| 40 | 5 | SS | 24 | 24 | Silty CLAY, With Wood, Trace Marine Shell Fragments, Dark Brown, Wet to Saturated, Medium Stiff, (CL) | | | | | | 8 |
| 45 | 6 | SS | 24 | 24 | Silty Fine to Medium SAND, Gray, Wet to Saturated, Medium Dense, (SM) | | | | | | 13 |
| 50 | 7 | SS | 24 | 24 | Fine Sandy CLAY, Trace Silt and Marine Shell Fragments, Brown and Gray, Wet to Saturated, Stiff, (CL) | 15m | | | | | 13 |
| | | | | | Silty Fine to Medium SAND, Trace Marine Shell Fragments, Gray, Wet to Saturated, Medium Dense, (SM) | | | | | | |
| 55 | 8 | SS | 24 | 24 | Fine Sandy SILT, Trace Clay and Marine Shell Fragments, Gray, Wet to Saturated, Medium Dense to Dense, (ML) | | | | | | 20 |
| 60 | 9 | SS | 24 | 24 | | | | | | | 21 |

CONTINUED ON NEXT PAGE.

THE STRATIFICATION LINES REPRESENT THE APPROXIMATE BOUNDARY LINES BETWEEN SOIL TYPES IN-SITU THE TRANSITION MAY BE GRADUAL

| | | | |
|---|---|---|---|
| WL | WS OR ▽ | BORING STARTED 10-24-97 | TOPSOIL DEPTH: |
| WL BCR ACR | | BORING COMPLETED 10-24-97 | CAVE IN DEPTH ⊗ |
| WL | RIG | FOREMAN FISHBURNE | DRILLING METHOD WS |

CLIENT: UNITED STATES NAVY | JOB #: N2585 | BORING #: B-6 | SHEET: 2 OF 2
PROJECT NAME: PIER 2 REPLACEMENT DO-0001 | ARCHITECT-ENGINEER: UNITED STATES NAVY
SITE LOCATION: DECATUR AVE., NORFOLK, VIRGINIA

| DEPTH (FT) | SAMPLE NO. | SAMPLE TYPE | SAMPLE DISTANCE (IN) | RECOVERY (IN) | DESCRIPTION OF MATERIAL | DEPTH (m) | CALIBRATED PENETROMETER Kg/cm2 | PLASTIC LIMIT % | WATER CONTENT % | LIQUID LIMIT % | STANDARD PENETRATION BLOWS/mm |
|---|---|---|---|---|---|---|---|---|---|---|---|
| | | | | | SURFACE ELEVATION | | | | | | |
| 60 | | | | | Fine Sandy SILT, Trace Clay and Marine Shell Fragments, Gray, Wet to Saturated, Medium Dense to Dense, (ML) | | | | | | |
| 65 | 10 | SS | 24 | 24 | | 20m | | | | | 22 |
| 70 | 11 | SS | 24 | 24 | | | | | | | 31 |
| 75 | 12 | SS | 24 | 24 | | | | | | | 25 |
| 80 | 13 | SS | 24 | 24 | | | | | | | 17 |
| 85 | 14 | SS | 24 | 24 | | 25m | | | | | 16 |
| 90 | 15 | SS | 24 | 24 | | | | | | | 15 |
| 95 | 16 | SS | 24 | 24 | | 30m | | | | | 19 |
| 100 | 17 | SS | 24 | 24 | Fine Silty and Sandy CLAY, Trace Marine Shell Fragments, Gray, Wet to Saturated, Stiff, (CL) | | | | | | 17 |
| 105 | 18 | SS | 24 | 24 | | | | | | | 13 |
| 110 | 19 | SS | 24 | 24 | END OF BORING @ 110.0' (33.5m) | 35m | | | | | 14 |
| 115 | | | | | | | | | | | |
| 120 | | | | | | | | | | | |

THE STRATIFICATION LINES REPRESENT THE APPROXIMATE BOUNDARY LINES BETWEEN SOIL TYPES IN-SITU THE TRANSITION MAY BE GRADUAL

| | | | |
|---|---|---|---|
| WL | WS OR ▽ | BORING STARTED 10-24-97 | TOPSOIL DEPTH: |
| WL BCR ACR | | BORING COMPLETED 10-24-97 | CAVE IN DEPTH ⊗ |
| WL | RIG | FOREMAN FISHBURNE | DRILLING METHOD WS |

REVISIONS

| SYM. | DESCRIPTION | DATE | APPROVED |
|---|---|---|---|

DESIGNED & ENGINEERED BY: LANTDIV NAVAL FACILITIES ENGINEERING COMMAND

APPROVED
ACTIVITY - SATISFACTORY TO
DATE
APPROVED
for EFD FOR COMMANDER NAVFAC
1/25/99
DATE

| A/E | | EFD |
|---|---|---|
| | DESIGN | DGB |
| | DRAWN | MBS |
| | REVIEW | KAN |
| | QC | |
| | CHIEF | ARCH./ ENGR. |
| PROJECT MANAGER | | DWB |
| FIRE PROTECTION | | DWR |
| BRANCH MANAGER | | KAN |
| DESIGN DIRECTOR | | |

DEPARTMENT OF THE NAVY
NAVAL FACILITIES ENGINEERING COMMAND
ATLANTIC DIVISION
NAVAL STATION NORFOLK, VIRGINIA
NAVAL STATION NORFOLK, VIRGINIA
PIER 2 REPLACEMENT
BORINGS 5 AMD 6

| | |
|---|---|
| CODE ID. NO. 80091 | SIZE D |
| SCALE: | NONE |
| EFD NO. | 493961 |
| STA. PROJ. NO. | P-355 |
| SPEC. NO. | 05-97-7041 |
| CONSTR. CONTR. NO. | N62470-97-B-7041 |
| NAVFAC DRAWING NO. | 4393961 |
| SHEET | 71 OF 240 |

B-3

DRAWFORM REVISION 27 JULY 98

FILENAME: 7041B3.DWG; PLOT SCALE: 1" = 1', SAVED ON 01/11/99 AT 09:47, XREFS: NONE

## BORING NO.7

CLIENT: UNITED STATES NAVY | JOB #: N2585 | BORING #: B-7 | SHEET: 1 OF 2
PROJECT NAME: PIER 2 REPLACEMENT DO-0001 | ARCHITECT-ENGINEER: UNITED STATES NAVY
SITE LOCATION: DECATUR AVE., NORFOLK, VIRGINIA

| DEPTH (FT) | SAMPLE NO. | SAMPLE TYPE | SAMPLE DISTANCE (IN) | RECOVERY (IN) | DESCRIPTION OF MATERIAL | DEPTH (m) | CALIBRATED PENETROMETER Kg/cm2 (1 2 3 4 5+) / PLASTIC LIMIT % / WATER CONTENT % / LIQUID LIMIT % / STANDARD PENETRATION BLOWS/mm (10 20 30 40 50+) |
|---|---|---|---|---|---|---|---|
| | | | | | SURFACE ELEVATION | | |
| 0 | | | | | Water | 1m | |
| 20 | 1 | SS | 24 | 24 | Silty CLAY, Trace Marine Shell Fragments, Dark Brown and Gray, Wet to Saturated, Very Soft, (CH) | 5m | BC |
| 25 | 2 | SS | 24 | 24 | | | BC |
| 30 | 3 | SS | 24 | 24 | | | BC |
| 35 | 4 | SS | 24 | 24 | | 10m | WOH |
| 40 | 5 | SS | 24 | 24 | Silty CLAY, Dark Brown, Wet to Saturated, Medium Stiff, (CL) | | 7 |
| 45 | 6 | SS | 24 | 24 | Silty Fine to Medium SAND, Gray, Wet to Saturated, Medium Dense, (SM) | 15m | 15 |
| 50 | 7 | SS | 24 | 24 | | | 26 |
| 55 | 8 | SS | 24 | 24 | Silty Fine to Medium SAND, Trace Marine Shell Fragments, Gray, Wet to Saturated, Loose, (SM) | | 9 |
| 60 | 9 | SS | 24 | 24 | Clayey Fine SAND, Trace Silt and Marine Shell Fragments, Gray, Wet to Saturated, Medium Dense to Dense, (SC) | | 28 |

CONTINUED ON NEXT PAGE.

THE STRATIFICATION LINES REPRESENT THE APPROXIMATE BOUNDARY LINES BETWEEN SOIL TYPES IN-SITU THE TRANSITION MAY BE GRADUAL

WL | WS OR CD | BORING STARTED 10-28-97 | TOPSOIL DEPTH:
WL | BCR | ACR | BORING COMPLETED 10-28-97 | CAVE IN DEPTH ⊕
WL | RIG | FOREMAN FISHBURNE | DRILLING METHOD WS

CLIENT: UNITED STATES NAVY | JOB #: N2585 | BORING #: B-7 | SHEET: 2 OF 2
PROJECT NAME: PIER 2 REPLACEMENT DO-0001 | ARCHITECT-ENGINEER: UNITED STATES NAVY
SITE LOCATION: DECATUR AVE., NORFOLK, VIRGINIA

| DEPTH (FT) | SAMPLE NO. | SAMPLE TYPE | SAMPLE DISTANCE (IN) | RECOVERY (IN) | DESCRIPTION OF MATERIAL | DEPTH (m) | CALIBRATED PENETROMETER Kg/cm2 (1 2 3 4 5+) / PLASTIC LIMIT % / WATER CONTENT % / LIQUID LIMIT % / STANDARD PENETRATION BLOWS/mm (10 20 30 40 50+) |
|---|---|---|---|---|---|---|---|
| | | | | | SURFACE ELEVATION | | |
| 60 | 10 | SS | 24 | 24 | Clayey Fine SAND, Trace Silt and Marine Shell Fragments, Gray, Wet to Saturated, Medium Dense to Dense, (SC) | 20m | 40 |
| 65 | 11 | SS | 24 | 24 | | | 34 |
| 70 | 12 | SS | 24 | 24 | | | 22 |
| 75 | 13 | SS | 24 | 24 | | | 19 |
| 80 | 14 | SS | 24 | 24 | CLAYEY FINE TO MEDIUM SAND, WITH MEDIUM RO COARSE GEAVEL, TRACE MARINE SHELL FRAGMENTS, GRAY,WET TO SATURATED, MEDIUM DENSE,(SC) | | 13 |
| 85 | 15 | SS | 24 | 24 | | 25m | 21 |
| 90 | 16 | SS | 24 | 24 | Fine Sandy CLAY, Gray, Wet to Saturated, Stiff to Very Stiff, (SC-CL) | | 12 |
| 95 | 17 | SS | 24 | 24 | | 30m | 18 |
| 100 | 18 | SS | 24 | 24 | | | 19 |
| 105 | 19 | SS | 24 | 24 | | | 17 |
| 110 | | | | | END OF BORING @ 110.0' (33.5m) | 35m | |
| 115 | | | | | | | |
| 120 | | | | | | | |

THE STRATIFICATION LINES REPRESENT THE APPROXIMATE BOUNDARY LINES BETWEEN SOIL TYPES IN-SITU THE TRANSITION MAY BE GRADUAL

WL | WS OR CD | BORING STARTED 10-28-97 | TOPSOIL DEPTH:
WL | BCR | ACR | BORING COMPLETED 10-28-97 | CAVE IN DEPTH ⊕
WL | RIG | FOREMAN FISHBURNE | DRILLING METHOD WS

## BORING NO.8

CLIENT: UNITED STATES NAVY | JOB #: N2585 | BORING #: B-8 | SHEET: 1 OF 2
PROJECT NAME: PIER 2 REPLACEMENT DO-0001 | ARCHITECT-ENGINEER: UNITED STATES NAVY
SITE LOCATION: DECATUR AVE., NORFOLK, VIRGINIA

| DEPTH (FT) | SAMPLE NO. | SAMPLE TYPE | SAMPLE DISTANCE (IN) | RECOVERY (IN) | DESCRIPTION OF MATERIAL | DEPTH (m) | CALIBRATED PENETROMETER Kg/cm2 (1 2 3 4 5+) / PLASTIC LIMIT % / WATER CONTENT % / LIQUID LIMIT % / STANDARD PENETRATION BLOWS/mm (10 20 30 40 50+) |
|---|---|---|---|---|---|---|---|
| | | | | | SURFACE ELEVATION | | |
| 0 | | | | | Water | 1m | |
| 20 | 1 | SS | 24 | 24 | SILTY CLAY, BROWN AND GRAY, WET TO SATURATED, VERY SOFT, (CH) | 5m | WOH |
| 25 | 2 | SS | 24 | 24 | | | WOH |
| 30 | 3 | SS | 24 | 24 | | | WOH |
| 35 | 4 | SS | 24 | 24 | SILTY FINE TO MEDIUM SAND, GRAY, WET TO SATURATED, VERY LOOSE,(SM) | 10m | WOH |
| 40 | 5 | SS | 24 | 24 | FINE SANDY AND SILTY CLAY, BROWN, WET TO SATURATED, SOFT TO MEDIUM STIFF, (CL) | | 4 |
| 45 | 6 | SS | 24 | 24 | FINE SANDY CLAY, TRACE SILT AND MARINE SHELL FRAGMENTS, GRAY, WET TO SATURATED, MEDIUM STIFF TO STIFF, (CL) | 15m | 8 |
| 50 | 7 | SS | 24 | 24 | Silty Fine to Medium SAND, Trace Marine Shell Fragments, Gray, Wet TO SATURATED, MEDIUM DENSE, (SM) | | 16 |
| 55 | 8 | SS | 24 | 24 | SILTY FINE SAND, TRACE MARINE SHELL FRAGMENTS, GRAY, WET TO SATURATED, MEDIUM DENSE, (SM) | | 24 |
| 60 | 9 | SS | 24 | 24 | | | 13 |

CONTINUED ON NEXT PAGE.

THE STRATIFICATION LINES REPRESENT THE APPROXIMATE BOUNDARY LINES BETWEEN SOIL TYPES IN-SITU THE TRANSITION MAY BE GRADUAL

WL | WS OR CD | BORING STARTED 10-27-97 | TOPSOIL DEPTH:
WL | BCR | ACR | BORING COMPLETED 10-27-97 | CAVE IN DEPTH ⊕
WL | RIG | FOREMAN FISHBURNE | DRILLING METHOD WS

CLIENT: UNITED STATES NAVY | JOB #: N2585 | BORING #: B-8 | SHEET: 2 OF 2
PROJECT NAME: PIER 2 REPLACEMENT DO-0001 | ARCHITECT-ENGINEER: UNITED STATES NAVY
SITE LOCATION: DECATUR AVE., NORFOLK, VIRGINIA

| DEPTH (FT) | SAMPLE NO. | SAMPLE TYPE | SAMPLE DISTANCE (IN) | RECOVERY (IN) | DESCRIPTION OF MATERIAL | DEPTH (m) | CALIBRATED PENETROMETER Kg/cm2 (1 2 3 4 5+) / PLASTIC LIMIT % / WATER CONTENT % / LIQUID LIMIT % / STANDARD PENETRATION BLOWS/mm (10 20 30 40 50+) |
|---|---|---|---|---|---|---|---|
| | | | | | SURFACE ELEVATION | | |
| 60 | 10 | SS | 24 | 24 | CLAYEY FINE SAND, TRACE MARINE SHELL FRAGMENTS, GRAY, WET TO SATURATED, MEDIUM DENSE, (SC) | 20m | 11 |
| 65 | 11 | SS | 24 | 24 | | | 15 |
| 70 | 12 | SS | 24 | 24 | | | 20 |
| 75 | 13 | SS | 24 | 24 | | | 18 |
| 80 | 14 | SS | 24 | 24 | | 25m | 18 |
| 85 | 15 | SS | 24 | 24 | | | 14 |
| 90 | | | | | END OF BORING AT 93.0' (28.3m) | | 50/0 |
| 95 | | | | | | 30m | |
| 100 | | | | | | | |
| 105 | | | | | | | |
| 110 | | | | | | 35m | |
| 115 | | | | | | | |
| 120 | | | | | | | |

THE STRATIFICATION LINES REPRESENT THE APPROXIMATE BOUNDARY LINES BETWEEN SOIL TYPES IN-SITU THE TRANSITION MAY BE GRADUAL

WL | WS OR CD | BORING STARTED 10-28-97 | TOPSOIL DEPTH:
WL | BCR | ACR | BORING COMPLETED 10-28-97 | CAVE IN DEPTH ⊕
WL | RIG | FOREMAN FISHBURNE | DRILLING METHOD WS

REVISIONS: SYM. | DESCRIPTION | DATE | APPROVED

DESIGNED & ENGINEERED BY: LANTDIV NAVAL FACILITIES ENGINEERING COMMAND

SEAL

APPROVED
ACTIVITY - SATISFACTORY TO
DATE
APPROVED
FOR EFD FOR COMMANDER NAVFAC
1/25/99
DATE

| A/E | EFD |
|---|---|
| DESIGN | DGB |
| DRAWN | MBS |
| REVIEW | KAN |
| QC | |
| CHIEF ARCH./ ENGR. | |
| PROJECT MANAGER | DWB |
| FIRE PROTECTION | DWR |
| BRANCH MANAGER | KAN |
| DESIGN DIRECTOR | |

DEPARTMENT OF THE NAVY
NAVAL STATION
ATLANTIC DIVISION
NAVAL FACILITIES ENGINEERING COMMAND
NORFOLK, VIRGINIA

NAVAL STATION NORFOLK, VIRGINIA
PIER 2 REPLACEMENT
BORINGS 7 AND 8

CODE ID. NO. 80091 | SIZE D
SCALE: NONE
EFD NO. 493962
STA. PROJ. NO. P-355
SPEC. NO. 05-97-7041
CONSTR. CONTR. NO. N62470-97-B-7041
NAVFAC DRAWING NO. 439362
SHEET 72 OF 240

B-4

DRAWFORM REVISION 27 JULY 98

FILENAME: 7041B4.DWG, PLOT SCALE: 1" = 1', SAVED ON 01/11/99 AT 09:49, XREFS: NONE

8 7 6 5 4 3 2 1 | D C B A

## BORING NO.9

| CLIENT | JOB # | BORING # | SHEET |
|---|---|---|---|
| UNITED STATES NAVY | N2585 | B-9 | 1 OF 2 |

PROJECT NAME: PIER 2 REPLACEMENT DO-0001
ARCHITECT-ENGINEER: UNITED STATES NAVY
SITE LOCATION: DECATUR AVE., NORFOLK, VIRGINIA

| DEPTH (FT) | SAMPLE NO. | SAMPLE TYPE | SAMPLE DISTANCE (IN) | RECOVERY (IN) | DESCRIPTION OF MATERIAL | DEPTH (m) |
|---|---|---|---|---|---|---|
| | | | | | SURFACE ELEVATION | |
| 0 | | | | | Water | 1m |
| 20 | 1 | SS | 24 | 24 | Silty CLAY, Brown and Gray, Wet to Saturated, Very Soft, (CH) | |
| 25 | 2 | SS | 24 | 24 | | |
| 30 | 3 | SS | 24 | 24 | | 10m |
| 35 | 4 | SS | 24 | 24 | SILTY FINE TO MEDIUM SAND, GRAY WET TO SATURATED, VERY LOOSE, (MS) | |
| 40 | 5 | SS | 24 | 24 | SILTY CLAY, TRACE FINE SAND AND WOOD, BROWN, WET TO SATURATED, MEDIUM STIFF, (CH) | |
| 45 | 6 | SS | 24 | 24 | SILTY FINE TO MEDIUM SAND, TRACE CLAY AND MARINE SHELL FRAGMENTS, GRAY, WET TO SATURATED, VERY LOOSE TO DENSE, (SM) | 15m |
| 50 | 7 | SS | 24 | 24 | | |
| 55 | 8 | SS | 24 | 24 | | |
| 60 | 9 | SS | 24 | 24 | | |

CALIBRATED PENETROMETER Kg/cm2 1 2 3 4 5+
PLASTIC LIMIT % X — WATER CONTENT % — LIQUID LIMIT % Δ
STANDARD PENETRATION BLOWS/mm ⊗ 10 20 30 40 50+

WOH WOH WOH 9 5 10 12 14

CONTINUED ON NEXT PAGE.

THE STRATIFICATION LINES REPRESENT THE APPROXIMATE BOUNDARY LINES BETWEEN SOIL TYPES IN-SITU THE TRANSITION MAY BE GRADUAL

| | | | |
|---|---|---|---|
| WL | WS OR ▽ | BORING STARTED | 10-29-97 |
| WL | BCR ACR | BORING COMPLETED | 10-29-97 |
| WL | | RIG FOREMAN FISHBURNE | DRILLING METHOD WS |

| CLIENT | JOB # | BORING # | SHEET |
|---|---|---|---|
| UNITED STATES NAVY | N2585 | B-9 | 2 OF 2 |

PROJECT NAME: PIER 2 REPLACEMENT DO-0001
ARCHITECT-ENGINEER: UNITED STATES NAVY
SITE LOCATION: DECATUR AVE., NORFOLK, VIRGINIA

| DEPTH (FT) | SAMPLE NO. | SAMPLE TYPE | SAMPLE DISTANCE (IN) | RECOVERY (IN) | DESCRIPTION OF MATERIAL | DEPTH (m) |
|---|---|---|---|---|---|---|
| | | | | | SURFACE ELEVATION | |
| 60 | | | | | SILTY FINE TO MEDIUM SAND, TRACE CLAY AND MARINE SHELL FRAGMENTS, GRAY, WET TO SATURATED, VERY LOOSE TO DENSE, (SM) | 20m |
| 65 | 10 | SS | 24 | 24 | | |
| 70 | 11 | SS | 24 | 24 | | |
| 75 | 12 | SS | 24 | 24 | | 25m |
| 80 | 13 | SS | 24 | 24 | | |
| 85 | 14 | SS | 24 | 24 | | |
| 90 | 15 | SS | 24 | 24 | | 30m |
| 95 | 16 | SS | 24 | 24 | | |
| 100 | 17 | SS | 24 | 24 | | |
| 105 | 18 | SS | 24 | 24 | | |
| 110 | 19 | SS | 24 | 24 | END OF BORING @ 110.0' (33.5m) | 35m |
| 115 | | | | | | |
| 120 | | | | | | |

CALIBRATED PENETROMETER Kg/cm2 1 2 3 4 5+
PLASTIC LIMIT % X — WATER CONTENT % — LIQUID LIMIT % Δ
STANDARD PENETRATION BLOWS/mm ⊗ 10 20 30 40 50+

13 32 14 22 20 22 18 11 18 12

THE STRATIFICATION LINES REPRESENT THE APPROXIMATE BOUNDARY LINES BETWEEN SOIL TYPES IN-SITU THE TRANSITION MAY BE GRADUAL

| | | | |
|---|---|---|---|
| WL | WS OR ▽ | BORING STARTED | 10-29-97 |
| WL | BCR ACR | BORING COMPLETED | 10-29-97 |
| WL | | RIG FOREMAN FISHBURNE | DRILLING METHOD WS |

## BORING NO.10

| CLIENT | JOB # | BORING # | SHEET |
|---|---|---|---|
| UNITED STATES NAVY | N2585 | B-10 | 1 OF 2 |

PROJECT NAME: PIER 2 REPLACEMENT DO-0001
ARCHITECT-ENGINEER: UNITED STATES NAVY
SITE LOCATION: DECATUR AVE., NORFOLK, VIRGINIA

| DEPTH (FT) | SAMPLE NO. | SAMPLE TYPE | SAMPLE DISTANCE (IN) | RECOVERY (IN) | DESCRIPTION OF MATERIAL | DEPTH (m) |
|---|---|---|---|---|---|---|
| | | | | | SURFACE ELEVATION | |
| 0 | | | | | Water | 1m |
| 20 | 1 | SS | 24 | 24 | SILTY CLAY, TRACE FINE SAND FROM 23 TO 25 FEET, BROWN AND GRAY, WET TO SATURATED, VERY SOFT, (CH) | |
| 25 | 2 | SS | 24 | 24 | | |
| 30 | 3 | SS | 24 | 24 | SILTY FINE TO MEDIUM SAND, TRACE MARINE SHELL FRAGMENTS, GRAY, WET TO SATURATED, MEDIUM DENSE, (SM) | 10m |
| 35 | 4 | SS | 24 | 24 | | |
| 40 | 5 | SS | 24 | 24 | | 15m |
| 45 | 6 | SS | 24 | 24 | | |
| 50 | 7 | SS | 24 | 24 | | |
| 55 | 8 | SS | 24 | 24 | | |
| 60 | | | | | | |

CALIBRATED PENETROMETER Kg/cm2 1 2 3 4 5+
PLASTIC LIMIT % X — WATER CONTENT % — LIQUID LIMIT % Δ
STANDARD PENETRATION BLOWS/mm ⊗ 10 20 30 40 50+

WOH WOH 14 23 15 20 17 22

CONTINUED ON NEXT PAGE.

THE STRATIFICATION LINES REPRESENT THE APPROXIMATE BOUNDARY LINES BETWEEN SOIL TYPES IN-SITU THE TRANSITION MAY BE GRADUAL

| | | | |
|---|---|---|---|
| WL | WS OR ▽ | BORING STARTED | 10-30-97 |
| WL | BCR ACR | BORING COMPLETED | 10-30-97 |
| WL | | RIG FOREMAN FISHBURNE | DRILLING METHOD WS |

| CLIENT | JOB # | BORING # | SHEET |
|---|---|---|---|
| UNITED STATES NAVY | N2585 | B-10 | 2 OF 2 |

PROJECT NAME: PIER 2 REPLACEMENT DO-0001
ARCHITECT-ENGINEER: UNITED STATES NAVY
SITE LOCATION: DECATUR AVE., NORFOLK, VIRGINIA

| DEPTH (FT) | SAMPLE NO. | SAMPLE TYPE | SAMPLE DISTANCE (IN) | RECOVERY (IN) | DESCRIPTION OF MATERIAL | DEPTH (m) |
|---|---|---|---|---|---|---|
| | | | | | SURFACE ELEVATION | |
| 60 | | | | | SILTY FINE TO MEDIUM SAND, TRACE MARINE SHELL FRAGMENTS, GRAY, WET TO SATURATED, MEDIUM DENSE, (SM) | 20m |
| 65 | 9 | SS | 34 | 24 | | |
| 70 | 10 | SS | 24 | 24 | | |
| 75 | 11 | SS | 24 | 24 | | 25m |
| 80 | 12 | SS | 24 | 24 | FINE SANDY CLAY, TRACE MARINE SHELL FRAGMENTS, GRAY, WET TO SATURATED, STIFF, (CL-SC) | |
| 85 | 13 | SS | 24 | 24 | CLAYEY FINE SAND, TRACE MARINE SHELL FRAGMENTS, GRAY, WET TO SATURATED. MEDIUM DENSE, (SC) | |
| 90 | 14 | SS | 24 | 24 | SILTY FINE SAND, TRACE CLAY AND MARINE SHELL FRAGMENTS, GRAY, WET TO SATURATED. MEDIUM DENSE, (SM) | 30m |
| 95 | 15 | SS | 24 | 24 | | |
| 100 | 16 | SS | 24 | 24 | | |
| 105 | 17 | SS | 24 | 24 | | |
| 110 | 18 | SS | 24 | 24 | END OF BORING @ 110.0' (33.5m) | 35m |
| 115 | | | | | | |
| 120 | | | | | | |

CALIBRATED PENETROMETER Kg/cm2 1 2 3 4 5+
PLASTIC LIMIT % X — WATER CONTENT % — LIQUID LIMIT % Δ
STANDARD PENETRATION BLOWS/mm ⊗ 10 20 30 40 50+

21 18 19 13 25 21 15 14

THE STRATIFICATION LINES REPRESENT THE APPROXIMATE BOUNDARY LINES BETWEEN SOIL TYPES IN-SITU THE TRANSITION MAY BE GRADUAL

| | | | |
|---|---|---|---|
| WL | WS OR ▽ | BORING STARTED | 10-30-97 |
| WL | BCR ACR | BORING COMPLETED | 10-30-97 |
| WL | | RIG FOREMAN FISHBURNE | DRILLING METHOD WS |

| NO. | DESCRIPTION | DATE | APPROVED |
|---|---|---|---|
| | | | |

REVISIONS

DESIGNED & ENGINEERED BY: LANTDIV NAVAL FACILITIES ENGINEERING COMMAND

SEAL

APPROVED
ACTIVITY - SATISFACTORY TO
DATE
APPROVED
FOR EFD FOR COMMANDER NAVFAC
1/25/99
DATE

| A/E | EFD |
|---|---|
| DESIGN | DGB |
| DRAWN | MBS |
| REVIEW | KAN |
| QC | |
| CHIEF ARCH./ ENGR. | |
| PROJECT MANAGER | DWB |
| FIRE PROTECTION | DWB |
| BRANCH MANAGER | KAN |
| DESIGN DIRECTOR | |

DEPARTMENT OF THE NAVY
NAVAL STATION
ATLANTIC DIVISION
NAVAL FACILITIES ENGINEERING COMMAND
NORFOLK, VIRGINIA

# PIER 2 REPLACEMNET

BORINGS 9 AND 10

| | |
|---|---|
| CODE ID. NO. 80091 | SIZE D |
| SCALE: | NONE |
| EFD NO. | 493963 |
| STA. PROJ. NO. | P-355 |
| SPEC. NO. | 05-97-7041 |
| CONSTR. CONTR. NO. | N62470-97-B-7041 |
| NAVFAC DRAWING NO. | 4393963 |
| SHEET | 73 OF 240 |

B-5

DRAWFORM REVISION 27 JULY 98

FILENAME: 7041B5.DWG, PLOT SCALE: 1" = 1', SAVED ON 01/11/99 AT 09:50, XREFS: NONE

8 7 6 5 4 3 2 1

D C B A

## BORING NO.11

CLIENT: UNITED STATES NAVY | JOB #: N2585 | BORING #: B-11 | SHEET: 1 OF 2
PROJECT NAME: PIER 2 REPLACEMENT DO-0001 | ARCHITECT-ENGINEER: UNITED STATES NAVY
SITE LOCATION: DECATUR AVE., NORFOLK, VIRGINIA

| DEPTH (FT) | SAMPLE NO. | SAMPLE TYPE | SAMPLE DISTANCE (IN) | RECOVERY (IN) | DESCRIPTION OF MATERIAL | DEPTH (m) | CALIBRATED PENETROMETER Kg/cm2 | PLASTIC LIMIT % | WATER CONTENT % | LIQUID LIMIT % | STANDARD PENETRATION BLOWS/mm |
|---|---|---|---|---|---|---|---|---|---|---|---|
| | | | | | SURFACE ELEVATION | | | | | | |
| 0 | | | | | Water | 1m | | | | | |
| 5 | | | | | | | | | | | |
| 10 | | | | | | 5m | | | | | |
| 15 | | | | | | | | | | | |
| 20 | | | | | | | | | | | |
| 25 | 1 | SS | 24 | 24 | SILTY CLAY, TRACE MARINE SHELL FRAGMENT, GRAY, WET TO SATURATED, VERY SOFT, (CH) | 10m | | | | | WOH |
| | 2 | SS | 24 | 24 | | | | | | | WOH |
| 30 | | | | | | | | | | | |
| 35 | 3 | SS | 24 | 24 | | | | | | | WOH |
| 40 | 4 | SS | 24 | 24 | | | | | | | WOH |
| 45 | 5 | SS | 24 | 24 | | 15m | | | | | WOH |
| 50 | 6 | SS | 24 | 24 | SILTY FINE TO MEDIUM SAND, TRACE CLAY AND MARINE SHELL FRAGMENTS, GRAY, WET TO SATURATED, MEDIUM DENSE, (SM) | | | | | | 15 |
| 55 | 7 | SS | 24 | 24 | | | | | | | 26 |
| 60 | 8 | SS | 24 | 24 | | | | | | | 22 |

CONTINUED ON NEXT PAGE.

THE STRATIFICATION LINES REPRESENT THE APPROXIMATE BOUNDARY LINES BETWEEN SOIL TYPES IN-SITU THE TRANSITION MAY BE GRADUAL

| | | | |
|---|---|---|---|
| WL | WS OR FD | BORING STARTED 11-4-97 | |
| WL | BCR ACR | BORING COMPLETED 11-4-97 | CAVE IN DEPTH ⊕ |
| WL | RIG | FOREMAN FISHBURNE | DRILLING METHOD WS |

CLIENT: UNITED STATES NAVY | JOB #: N2585 | BORING #: B-11 | SHEET: 2 OF 2
PROJECT NAME: PIER 2 REPLACEMENT DO-0001 | ARCHITECT-ENGINEER: UNITED STATES NAVY
SITE LOCATION: DECATUR AVE., NORFOLK, VIRGINIA

| DEPTH (FT) | SAMPLE NO. | SAMPLE TYPE | SAMPLE DISTANCE (IN) | RECOVERY (IN) | DESCRIPTION OF MATERIAL | DEPTH (m) | STANDARD PENETRATION BLOWS/mm |
|---|---|---|---|---|---|---|---|
| | | | | | SURFACE ELEVATION | | |
| 60 | | | | | SILTY FINE TO MEDIUM SAND, TRACE CLAY AND MARINE SHELL FRAGMENTS, GRAY, WET TO SATURATED, MEDIUM DENSE, (SM) | 20m | |
| 65 | 9 | SS | 24 | 24 | | | 23 |
| 70 | 10 | SS | 24 | 24 | | | 21 |
| 75 | 11 | SS | 24 | 24 | | | 19 |
| 80 | 12 | SS | 24 | 24 | | 25m | 19 |
| 85 | 13 | SS | 24 | 24 | | | 19 |
| 90 | 14 | SS | 24 | 24 | | | 16 |
| 95 | 15 | SS | 24 | 24 | | | 12 |
| 100 | 16 | SS | 24 | 24 | CLAYEY FINE TO MEDIUM SAND, GRAY, WET TO SATURATED, MEDIUM DENSE, (SC) | 30m | 15 |
| 105 | 17 | SS | 24 | 24 | | | 18 |
| 110 | 18 | SS | 24 | 24 | | | 25 |
| 115 | | | | | END OF BORING @ 110.0' (33.5m) | 35m | |
| 120 | | | | | | | |

THE STRATIFICATION LINES REPRESENT THE APPROXIMATE BOUNDARY LINES BETWEEN SOIL TYPES IN-SITU THE TRANSITION MAY BE GRADUAL

| | | | |
|---|---|---|---|
| WL | WS OR FD | BORING STARTED 11-4-97 | |
| WL | BCR ACR | BORING COMPLETED 11-4-97 | CAVE IN DEPTH ⊕ |
| WL | RIG | FOREMAN FISHBURNE | DRILLING METHOD WS |

## BORING NO.12

CLIENT: UNITED STATES NAVY | JOB #: N2585 | BORING #: B-12 | SHEET: 1 OF 2
PROJECT NAME: PIER 2 REPLACEMENT DO-0001 | ARCHITECT-ENGINEER: UNITED STATES NAVY
SITE LOCATION: DECATUR AVE., NORFOLK, VIRGINIA

| DEPTH (FT) | SAMPLE NO. | SAMPLE TYPE | SAMPLE DISTANCE (IN) | RECOVERY (IN) | DESCRIPTION OF MATERIAL | DEPTH (m) | CALIBRATED PENETROMETER Kg/cm2 | PLASTIC LIMIT % | WATER CONTENT % | LIQUID LIMIT % | STANDARD PENETRATION BLOWS/mm |
|---|---|---|---|---|---|---|---|---|---|---|---|
| | | | | | SURFACE ELEVATION | | | | | | |
| 0 | | | | | Water | 1m | | | | | |
| 5 | | | | | | | | | | | |
| 10 | | | | | | 5m | | | | | |
| 15 | | | | | | | | | | | |
| 20 | 1 | SS | 24 | 24 | SILTY FINE TO MEDIUM SAND. TRACE MARINE SHELL FRAGMENTS, GRAY, WET, MEDIUM DENSE, (SM) | | | | | | 14 |
| | | | | | CLAYEY FINE TO MEDIUM SAND. GRAY. WET, LOOSE TO DENSE, (SC-CL) | | | | | | |
| 25 | 2 | SS | 24 | 24 | | 10m | | | | | 8 |
| 30 | 3 | SS | 24 | 24 | | | | | | | 6 |
| 35 | 4 | SS | 24 | 24 | | | | | | | 24 |
| 40 | 5 | SS | 24 | 24 | | | | | | | 22 |
| 45 | 6 | SS | 24 | 24 | | 15m | | | | | 23 |
| 50 | 7 | SS | 24 | 24 | | | | | | | 32 |
| 55 | 8 | SS | 24 | 24 | | | | | | | 31 |
| 60 | 9 | SS | 24 | 24 | | | | | | | 35 |

CONTINUED ON NEXT PAGE.

THE STRATIFICATION LINES REPRESENT THE APPROXIMATE BOUNDARY LINES BETWEEN SOIL TYPES IN-SITU THE TRANSITION MAY BE GRADUAL

| | | | |
|---|---|---|---|
| WL | WS OR FD | BORING STARTED 10-17-97 | TOPSOIL DEPTH: |
| WL | BCR ACR | BORING COMPLETED 10-17-97 | CAVE IN DEPTH ⊕ |
| WL | RIG | FOREMAN FISHBURNE | DRILLING METHOD WS |

CLIENT: UNITED STATES NAVY | JOB #: N2585 | BORING #: B-12 | SHEET: 2 OF 2
PROJECT NAME: PIER 2 REPLACEMENT DO-0001 | ARCHITECT-ENGINEER: UNITED STATES NAVY
SITE LOCATION: DECATUR AVE., NORFOLK, VIRGINIA

| DEPTH (FT) | SAMPLE NO. | SAMPLE TYPE | SAMPLE DISTANCE (IN) | RECOVERY (IN) | DESCRIPTION OF MATERIAL | DEPTH (m) | STANDARD PENETRATION BLOWS/mm |
|---|---|---|---|---|---|---|---|
| | | | | | SURFACE ELEVATION | | |
| 60 | | | | | CLAYEY FINE TO MEDIUM SAND. GRAY. WET, LOOSE TO DENSE, (SC-CL) | 20m | |
| 65 | 10 | SS | 34 | 24 | | | 24 |
| 70 | 11 | SS | 24 | 24 | | | 24 |
| 75 | 12 | SS | 24 | 24 | FINE TO MEDIUM SANDY CLAY, TRACE MARINE SHALL FRAGMENTS, GRAY, WET, VERY STIFF, (CL) | 25m | 26 |
| 80 | 13 | SS | 24 | 24 | | | 18 |
| 85 | 14 | SS | 24 | 24 | | | 18 |
| 90 | 15 | SS | 24 | 24 | | | 20 |
| 95 | | | | | END OF BORING @ 90.0' (27.4m) | 30m | |
| 100 | | | | | | | |
| 105 | | | | | | | |
| 110 | | | | | | | |
| 115 | | | | | | | |
| 120 | | | | | | | |

THE STRATIFICATION LINES REPRESENT THE APPROXIMATE BOUNDARY LINES BETWEEN SOIL TYPES IN-SITU THE TRANSITION MAY BE GRADUAL

| | | | |
|---|---|---|---|
| WL | WS OR FD | BORING STARTED 10-17-97 | TOPSOIL DEPTH: |
| WL | BCR ACR | BORING COMPLETED 10-17-97 | CAVE IN DEPTH ⊕ |
| WL | RIG | FOREMAN FISHBURNE | DRILLING METHOD WS |

REVISIONS

| SYM. | DESCRIPTION | DATE | APPROVED |
|---|---|---|---|

DESIGNED & ENGINEERED BY: LANTDIV NAVAL FACILITIES ENGINEERING COMMAND

APPROVED
ACTIVITY - SATISFACTORY TO
DATE
APPROVED
FOR EFD FOR COMMANDER NAVFAC
1/25/99
DATE

| A/E | EFD |
|---|---|
| DESIGN | DGB |
| DRAWN | MBS |
| REVIEW | KAN |
| QC | |
| CHIEF ARCH./ ENGR. | |
| PROJECT MANAGER | DWB |
| FIRE PROTECTION | DWR |
| BRANCH MANAGER | KAN |
| DESIGN DIRECTOR | |

SEAL

DEPARTMENT OF THE NAVY
NAVAL STATION
ATLANTIC DIVISION
NAVAL FACILITIES ENGINEERING COMMAND
NORFOLK, VIRGINIA

NAVAL STATION NORFOLK, VIRGINIA
PIER 2 REPLACEMENT
BORINGS 11 AND 12

| | |
|---|---|
| CODE ID. NO. 80091 | SIZE D |
| SCALE: NONE | |
| EFD NO. 493964 | |
| STA. PROJ. NO. P-355 | |
| SPEC. NO. 05-97-7041 | |
| CONSTR. CONTR. NO. N62470-97-B-7041 | |
| NAVFAC DRAWING NO. 4393964 | |
| SHEET 74 OF 240 | |
| B-6 | |

FILENAME: 7041B6.DWG, PLOT SCALE: 1" = 1', SAVED ON 01/11/99 AT 09:52, XREFS: NONE

DRAWFORM REVISION 27 JULY 98

D C B A

8 7 6 5 4 3 2 1

## BORING NO.13

CLIENT: UNITED STATES NAVY | JOB #: N2585 | BORING #: B-13 | SHEET: 1 OF 2
PROJECT NAME: PIER 2 REPLACEMENT DO-0001 | ARCHITECT-ENGINEER: UNITED STATES NAVY
SITE LOCATION: DECATUR AVE., NORFOLK, VIRGINIA

| DEPTH (FT) | SAMPLE NO. | SAMPLE TYPE | SAMPLE DISTANCE (IN) | RECOVERY (IN) | DESCRIPTION OF MATERIAL | DEPTH (m) | CALIBRATED PENETROMETER Kg/cm2 (1 2 3 4 5+) | PLASTIC LIMIT % | WATER CONTENT % | LIQUID LIMIT % | STANDARD PENETRATION BLOWS/mm (10 20 30 40 50+) |
|---|---|---|---|---|---|---|---|---|---|---|---|
| | | | | | SURFACE ELEVATION | | | | | | |
| 0 | | | | | Water | 1m | | | | | |
| 5 | 1 | SS | 24 | 24 | SILTY FINE TO MEDIUM SAND, BROWN AND GRAY, WET, MEDIUM DENSE, (SM) | | 13 | | | | |
| 10 | 2 | SS | 24 | 24 | SILTY CLAY, BROWM, WET, SOFT TO MEDIUM STIFF, (CL) | 5m | 4 | | | | |
| 15 | 3 | SS | 24 | 24 | | | 9 | | | | |
| 20 | 4 | SS | 24 | 24 | | | 5 | | | | |
| 25 | 5 | SS | 24 | 24 | SILTY FINE TO MEDIUM SAND, BROWN, WET, LOOSE. (SM) [ORGANICS] / FINE SANDY CLAY, GRAY, WET, MEDIUM STIFF, (SC-CL) | 10m | 8 | | | | |
| 30 | 6 | SS | 24 | 24 | SILTY FINE TO MEDIUM SAND, TRACE MARINE SHELL FRAGMENT, GRAY, WET, MEDIUM DENSE TO DENSE, (SC-CL) | | 15 | | | | |
| 35 | 7 | SS | 24 | 24 | | | 23 | | | | |
| 40 | 8 | SS | 24 | 24 | | | 23 | | | | |
| 45 | 9 | SS | 24 | 24 | | 15m | 26 | | | | |
| 50 | 10 | SS | 24 | 24 | | | 29 | | | | |
| 55 | 11 | SS | 24 | 24 | | | 34 | | | | |
| 60 | | | | | | | | | | | |

CONTINUED ON NEXT PAGE.

THE STRATIFICATION LINES REPRESENT THE APPROXIMATE BOUNDARY LINES BETWEEN SOIL TYPES IN-SITU THE TRANSITION MAY BE GRADUAL

| | | | |
|---|---|---|---|
| WL | WS OR ED | BORING STARTED 10-15-97 | TOPSOIL DEPTH: |
| WL BCR ACR | | BORING COMPLETED 10-15-97 | CAVE IN DEPTH ⊕ |
| WL | RIG | FOREMAN FISHBURNE | DRILLING METHOD WS |

CLIENT: UNITED STATES NAVY | JOB #: N2585 | BORING #: B-13 | SHEET: 2 OF 2
PROJECT NAME: PIER 2 REPLACEMENT DO-0001 | ARCHITECT-ENGINEER: UNITED STATES NAVY
SITE LOCATION: DECATUR AVE., NORFOLK, VIRGINIA

| DEPTH (FT) | SAMPLE NO. | SAMPLE TYPE | SAMPLE DISTANCE (IN) | RECOVERY (IN) | DESCRIPTION OF MATERIAL | DEPTH (m) | CALIBRATED PENETROMETER Kg/cm2 (1 2 3 4 5+) | PLASTIC LIMIT % | WATER CONTENT % | LIQUID LIMIT % | STANDARD PENETRATION BLOWS/mm (10 20 30 40 50+) |
|---|---|---|---|---|---|---|---|---|---|---|---|
| | | | | | SURFACE ELEVATION | | | | | | |
| 60 | | | | | SILTY FINE TO MEDIUM SAND, TRACE MARINE SHELL FRAGMENT, GRAY, WET, MEDIUM DENSE TO DENSE, (SC-CL) | 20m | | | | | |
| 65 | 12 | SS | 24 | 24 | | | 38 | | | | |
| 70 | 13 | SS | 24 | 24 | FINE TO MEDIUM SANDY CLAY, TRACE MARINE SHELL FRAGMENT, GRAY, WET, VERY STIFF, (CL) | | 23 | | | | |
| 75 | 14 | SS | 24 | 24 | | | 22 | | | | |
| 80 | 15 | SS | 24 | 24 | | | 23 | | | | |
| 85 | 16 | SS | 24 | 24 | | 25m | 20 | | | | |
| 90 | 17 | SS | 24 | 24 | END OF BORING @ 90.0' (27.4m) | | 23 | | | | |
| 95 | | | | | | 30m | | | | | |
| 100 | | | | | | | | | | | |
| 105 | | | | | | | | | | | |
| 110 | | | | | | | | | | | |
| 115 | | | | | | | | | | | |
| 120 | | | | | | | | | | | |

THE STRATIFICATION LINES REPRESENT THE APPROXIMATE BOUNDARY LINES BETWEEN SOIL TYPES IN-SITU THE TRANSITION MAY BE GRADUAL

| | | | |
|---|---|---|---|
| WL | WS OR ED | BORING STARTED 10-15-97 | TOPSOIL DEPTH: |
| WL BCR ACR | | BORING COMPLETED 10-15-97 | CAVE IN DEPTH ⊕ |
| WL | RIG | FOREMAN FISHBURNE | DRILLING METHOD WS |

## BORING NO.14

CLIENT: UNITED STATES NAVY | JOB #: N2585 | BORING #: B-14 | SHEET: 1 OF 2
PROJECT NAME: PIER 2 REPLACEMENT DO-0001 | ARCHITECT-ENGINEER: UNITED STATES NAVY
SITE LOCATION: DECATUR AVE., NORFOLK, VIRGINIA

| DEPTH (FT) | SAMPLE NO. | SAMPLE TYPE | SAMPLE DISTANCE (IN) | RECOVERY (IN) | DESCRIPTION OF MATERIAL | DEPTH (m) | CALIBRATED PENETROMETER Kg/cm2 (1 2 3 4 5+) | PLASTIC LIMIT % | WATER CONTENT % | LIQUID LIMIT % | STANDARD PENETRATION BLOWS/mm (10 20 30 40 50+) |
|---|---|---|---|---|---|---|---|---|---|---|---|
| | | | | | SURFACE ELEVATION | | | | | | |
| 0 | | | | | Water | 1m | | | | | |
| 5 | 1 | SS | 24 | 24 | SILTY FINE TO MEDIUM SAND, WITH FINE GRAVEL LENS FROM 4 TO 4.2 FEET, GRAY, WET TO SATURATED, VERY LOOSE TO LOOSE, (MS) | | 14 | | | | |
| 10 | 2 | SS | 24 | 24 | | 5m | 6 | | | | |
| 15 | 3 | SS | 24 | 24 | | | 2 | | | | |
| 20 | 4 | SS | 24 | 24 | SILTY CLAY, DARK BROWN, WET TO SATURATED, SOFT TO MEDIUM STIFF, (CL) | | 4 | | | | |
| 25 | 5 | SS | 24 | 24 | | | 5 | | | | |
| 30 | 6 | SS | 24 | 24 | | 10m | 4 | | | | |
| 35 | 7 | SS | 24 | 24 | SILTY FINE SAND, GRAY, WET TO SATURATED, LOOSE, (SM) | | 6 | | | | |
| 40 | 8 | SS | 24 | 24 | | | 9 | | | | |
| 45 | 9 | SS | 24 | 24 | SILTY FINE TO MEDIUM SAND, TRACE MARINE SHELL FRAGMENTS, GRAY, WET TO SATURATED, MEDIUM DENSE, (SM) | | 27 | | | | |
| 50 | 10 | SS | 24 | 24 | CLAYEY AND FINE SANDY SILT, TRACE MARINE SHELL FRAGMENTS, GRAY, WET TO SATURATED, MEDIUM DENSE, (ML) | 15m | 14 | | | | |
| 55 | 11 | SS | 24 | 24 | | | 23 | | | | |
| 60 | 12 | SS | 24 | 24 | | | 20 | | | | |

CONTINUED ON NEXT PAGE.

THE STRATIFICATION LINES REPRESENT THE APPROXIMATE BOUNDARY LINES BETWEEN SOIL TYPES IN-SITU THE TRANSITION MAY BE GRADUAL

| | | | |
|---|---|---|---|
| WL | WS OR ED | BORING STARTED 10-22-97 | TOPSOIL DEPTH: |
| WL BCR ACR | | BORING COMPLETED 10-22-97 | CAVE IN DEPTH ⊕ |
| WL | RIG | FOREMAN FISHBURNE | DRILLING METHOD WS |

CLIENT: UNITED STATES NAVY | JOB #: N2585 | BORING #: B-14 | SHEET: 2 OF 2
PROJECT NAME: PIER 2 REPLACEMENT DO-0001 | ARCHITECT-ENGINEER: UNITED STATES NAVY
SITE LOCATION: DECATUR AVE., NORFOLK, VIRGINIA

| DEPTH (FT) | SAMPLE NO. | SAMPLE TYPE | SAMPLE DISTANCE (IN) | RECOVERY (IN) | DESCRIPTION OF MATERIAL | DEPTH (m) | CALIBRATED PENETROMETER Kg/cm2 (1 2 3 4 5+) | PLASTIC LIMIT % | WATER CONTENT % | LIQUID LIMIT % | STANDARD PENETRATION BLOWS/mm (10 20 30 40 50+) |
|---|---|---|---|---|---|---|---|---|---|---|---|
| | | | | | SURFACE ELEVATION | | | | | | |
| 60 | | | | | CLAYEY AND FINE SANDY SILT, TRACE MARINE SHELL FRAGMENTS, GRAY, WET TO SATURATED, MEDIUM DENSE, (ML) | 20m | | | | | |
| 65 | 13 | SS | 24 | 24 | | | 17 | | | | |
| 70 | 14 | SS | 24 | 24 | | | 14 | | | | |
| 75 | 15 | SS | 24 | 24 | | | 15 | | | | |
| 80 | 16 | SS | 24 | 24 | | | 16 | | | | |
| 85 | 17 | SS | 24 | 24 | SILTY AND FINE SANDY CLAY, GRAY, WET TO SATURATEDS, STIFF, (SC-CL) | 25m | 13 | | | | |
| 90 | 18 | SS | 24 | 24 | END OF BORING @ 90.0' (27.4m) | | 14 | | | | |
| 95 | | | | | | 30m | | | | | |
| 100 | | | | | | | | | | | |
| 105 | | | | | | | | | | | |
| 110 | | | | | | | | | | | |
| 115 | | | | | | | | | | | |
| 120 | | | | | | | | | | | |

THE STRATIFICATION LINES REPRESENT THE APPROXIMATE BOUNDARY LINES BETWEEN SOIL TYPES IN-SITU THE TRANSITION MAY BE GRADUAL

| | | | |
|---|---|---|---|
| WL | WS OR ED | BORING STARTED 10-22-97 | TOPSOIL DEPTH: |
| WL BCR ACR | | BORING COMPLETED 10-22-97 | CAVE IN DEPTH ⊕ |
| WL | RIG | FOREMAN FISHBURNE | DRILLING METHOD WS |

REVISIONS

| SYM | DESCRIPTION | DATE | APPROVED |
|---|---|---|---|

DESIGNED & ENGINEERED BY: LANTDIV NAVAL FACILITIES ENGINEERING COMMAND

APPROVED
ACTIVITY - SATISFACTORY TO
DATE
APPROVED
FOR EFD FOR COMMANDER NAVFAC
1/25/99
DATE

| A/E | EFD |
|---|---|
| DESIGN | DGB |
| DRAWN | MBS |
| REVIEW | KAN |
| QC | |
| CHIEF ARCH./ ENGR. | |
| PROJECT MANAGER | DWB |
| FIRE PROTECTION | DWB |
| BRANCH MANAGER | KAN |
| DESIGN DIRECTOR | |

DEPARTMENT OF THE NAVY
NAVAL FACILITIES ENGINEERING COMMAND
ATLANTIC DIVISION
NAVAL STATION
NORFOLK, VIRGINIA

# PIER 2 REPLACEMENT

BORINGS 13 AND 14

| | |
|---|---|
| CODE ID. NO. 80091 | SIZE D |
| SCALE: | NONE |
| EFD NO. | 493965 |
| STA. PROJ. NO. | P-355 |
| SPEC. NO. | 05-07-7041 |
| CONSTR. CONTR. NO. | N62470-97-B-7041 |
| NAVFAC DRAWING NO. | 439395 |
| SHEET | 75 OF 240 |

B-7

DRAWFORM REVISION 27 JULY 98

FILENAME: 7041B7.DWG, PLOT SCALE: 1" = 1', SAVED ON 01/11/99 AT 09:52, XREFS: NONE

## BORING NO. 15

CLIENT: UNITED STATES NAVY | JOB #: N2585 | BORING #: B-15 | SHEET: 1 OF 1
PROJECT NAME: PIER 2 REPLACEMENT DO-0001 | ARCHITECT-ENGINEER: UNITED STATES NAVY
SITE LOCATION: DECATUR AVE., NORFOLK, VIRGINIA

| DEPTH (FT) | SAMPLE NO. | SAMPLE TYPE | SAMPLE DISTANCE (IN) | RECOVERY (IN) | DESCRIPTION OF MATERIAL |
|---|---|---|---|---|---|
| | | | | | SURFACE ELEVATION |
| 0 | 1 | SS | 24 | 24 | SILTY FINE TO COARSE SAND, TRACE FINE GRAVEL, BROWN, MOIST, DENSE, (SM/FILL) |
| 5 | 2 | SS | 24 | 24 | SILTY FINE TO COARSE SAND, TRACE FINE GRAVEL AND CONCRETE, GRAY, MOIST, VERY LOOSE TO DENSE. (SM/FILL) |
| | 3 | SS | 24 | 24 | |
| | 4 | SS | 24 | 24 | |
| 10 | 5 | SS | 24 | 24 | SILTY FINE TO MEDIUM SAND, GRAY, WET TO SATURATED, VERY LOOSE, (SM) |
| 15 | 6 | SS | 24 | 24 | |
| 20 | 7 | SS | 24 | 24 | SILTY CLAY, GRAY, WET TO SATURATED, VERY SOFT, (CL) |
| 25 | 8 | SS | 24 | 24 | SILTY ORGANIC CLAY, DARK BROWN, WET TO SATURATED, SOFT TO MEDIUM STIFF, (OL) |
| 30 | 9 | SS | 24 | 24 | |
| 35 | 10 | SS | 24 | 24 | |
| 40 | 11 | SS | 24 | 24 | |
| 45 | 12 | SS | 24 | 24 | SILTY FINE TO MEDIUM SAND, TRACE MARINE SHELL FRAGMENTS, GRAY, WET TO SATURATED, MEDIUM DENSE, (SM) |
| 50 | 13 | SS | 24 | 24 | |
| 55 | 14 | SS | 24 | 24 | |
| 60 | 12 | SS | 24 | 24 | |
| 65 | 13 | SS | 24 | 24 | |
| 70 | 14 | SS | 24 | 24 | |
| 75 | | | | | END OF BORING @ 75.0' (22.86m) |

CALIBRATED PENETROMETER Kg/cm2 (1 2 3 4 5+) | PLASTIC LIMIT % | WATER CONTENT % | LIQUID LIMIT % | STANDARD PENETRATION BLOWS/mm (10 20 30 40 50+)

THE STRATIFICATION LINES REPRESENT THE APPROXIMATE BOUNDARY LINES BETWEEN SOIL TYPES IN-SITU THE TRANSITION MAY BE GRADUAL

| | | | |
|---|---|---|---|
| WL | WS OR ▽D BORING STARTED 10-30-97 | | |
| WL BCR ACR | BORING COMPLETED 10-30-97 | CAVE IN DEPTH ⊕ | |
| WL | RIG FOREMAN FISHBURNE | DRILLING METHOD WS | |

## BORING NO.16

CLIENT: UNITED STATES NAVY | JOB #: N2585 | BORING #: B-16 | SHEET: 1 OF 1
PROJECT NAME: PIER 2 REPLACEMENT DO-0001 | ARCHITECT-ENGINEER: UNITED STATES NAVY
SITE LOCATION: DECATUR AVE., NORFOLK, VIRGINIA

| DEPTH (FT) | SAMPLE NO. | SAMPLE TYPE | SAMPLE DISTANCE (IN) | RECOVERY (IN) | DESCRIPTION OF MATERIAL |
|---|---|---|---|---|---|
| | | | | | SURFACE ELEVATION |
| 0 | 1 | SS | 24 | 24 | SILTY FINE TO COARSE SAND, TRACE FINE TO COARSE GRAVEL, BROWN AND GRAY, MOIST, LOOSE TO VERY DENSE, (SM/FILL) |
| 5 | 2 | SS | 24 | 24 | |
| | 3 | SS | 24 | 24 | |
| | 4 | SS | 24 | 24 | |
| 10 | 5 | SS | 24 | 24 | |
| 15 | 6 | SS | 24 | 24 | SILTY FINE TO MEDIUM SAND, TRACE MARINE SHELL FRAGMENTS, GRAY, WET TO SATURATED, LOOSE, (SM) |
| 20 | 7 | SS | 24 | 24 | |
| 25 | 8 | SS | 24 | 24 | SILTY ORGANIC CLAY, DARK BROWN, WET TO SATURATED, SOFT TO MEDIUM STIFF, (OL) |
| 30 | 9 | SS | 24 | 24 | |
| 35 | 10 | SS | 24 | 24 | |
| 40 | 11 | SS | 24 | 24 | |
| 45 | 12 | SS | 24 | 24 | SILTY FINE TO MEDIUM SAND, TRACE MARINE SHELL FRAGMENTS, GRAY, WET TO SATURATED, LOOSE TO MEDIUM DENSE, (SM) |
| 50 | 13 | SS | 24 | 24 | |
| 55 | 14 | SS | 24 | 24 | CLAYEY FINE TO MEDIUM SAND, TRACE MARINE SHELL FRAGMENTS, GRAY, WET TO SATURATED, LOOSE TO MEDIUM DENSE, (SC) |
| 60 | 15 | SS | 24 | 24 | SILTY FINE TO MEDIUM SAND, TRACE CLAY AND MARINE SHELL FRAGMENTS, GRAY, WET TO SATURATED, MEDIUM DENSE, (SM) |
| 65 | 16 | SS | 24 | 24 | CLAY AND MARINE SHELL FRAGMENTS, GRAY, WET TO SATURATED, MEDIUM DENSE, (SM) |
| 70 | 17 | SS | 24 | 24 | |
| 75 | 18 | SS | 24 | 24 | END OF BORING @ 75.0' (22.86m) |

CALIBRATED PENETROMETER Kg/cm2 (1 2 3 4 5+) | PLASTIC LIMIT % | WATER CONTENT % | LIQUID LIMIT % | STANDARD PENETRATION BLOWS/mm (10 20 30 40 50+)

THE STRATIFICATION LINES REPRESENT THE APPROXIMATE BOUNDARY LINES BETWEEN SOIL TYPES IN-SITU THE TRANSITION MAY BE GRADUAL

| | | | |
|---|---|---|---|
| WL 6.75 FEET (2.06m) | WS OR ▽D BORING STARTED 10-22-97 | | TOPSOIL DEPTH: |
| WL BCR ACR | BORING COMPLETED 10-22-97 | CAVE IN DEPTH ⊕ | |
| WL | RIG FOREMAN FISHBURNE | DRILLING METHOD WS | |

## BORING NO.17

CLIENT: UNITED STATES NAVY | JOB #: N2585 | BORING #: B-17 | SHEET: 1 OF 1
PROJECT NAME: PIER 2 REPLACEMENT DO-0001 | ARCHITECT-ENGINEER: UNITED STATES NAVY
SITE LOCATION: DECATUR AVE., NORFOLK, VIRGINIA

| DEPTH (FT) | SAMPLE NO. | SAMPLE TYPE | SAMPLE DISTANCE (IN) | RECOVERY (IN) | DESCRIPTION OF MATERIAL |
|---|---|---|---|---|---|
| | | | | | SURFACE ELEVATION |
| 0 | | | | | Water |
| 10 | 1 | SS | 24 | 24 | SILTY FINE TO MEDIUM SAND, GRAY, WET TO SATURATED, VERY LOOSE, (SM) |
| | 2 | SS | 24 | 24 | SILTY CLAY, TRACE MARINE SHELL FRAGMENTS, GRAY, WET TO SATURATED, SOFT, (CL) |
| 15 | 3 | SS | 24 | 24 | |
| 20 | 4 | SS | 24 | 24 | SILTY ORGANIC CLAY, DARK BROWN, WET TO SATURATED, SOFT TO STIFF, (OL) |
| 25 | 5 | SS | 24 | 24 | |
| 30 | 6 | SS | 24 | 24 | |
| 35 | 7 | SS | 24 | 24 | |
| 40 | 8 | SS | 24 | 24 | |
| 45 | 9 | SS | 24 | 24 | SILTY FINE TO MEDIUM SAND, TRACE CLAY AND MARINE SHELL FRAGMENTS, GRAY, WET TO SATURATED, MEDIUM DENSE, (SM) |
| 50 | 10 | SS | 24 | 24 | |
| 55 | 11 | SS | 24 | 24 | |
| 60 | | | | | END OF BORING @ 60.0' (18.29m) |

CALIBRATED PENETROMETER Kg/cm2 (1 2 3 4 5+) | PLASTIC LIMIT % | WATER CONTENT % | LIQUID LIMIT % | STANDARD PENETRATION BLOWS/mm (10 20 30 40 50+)

THE STRATIFICATION LINES REPRESENT THE APPROXIMATE BOUNDARY LINES BETWEEN SOIL TYPES IN-SITU THE TRANSITION MAY BE GRADUAL

| | | | |
|---|---|---|---|
| WL | WS OR ▽D BORING STARTED 11-3-97 | | |
| WL BCR ACR | BORING COMPLETED 11-3-97 | CAVE IN DEPTH ⊕ | |
| WL | RIG FOREMAN FISHBURNE | DRILLING METHOD WS | |

## BORING NO.18

CLIENT: UNITED STATES NAVY | JOB #: N2585 | BORING #: B-18 | SHEET: 1 OF 1
PROJECT NAME: PIER 2 REPLACEMENT DO-0001 | ARCHITECT-ENGINEER: UNITED STATES NAVY
SITE LOCATION: DECATUR AVE., NORFOLK, VIRGINIA

| DEPTH (FT) | SAMPLE NO. | SAMPLE TYPE | SAMPLE DISTANCE (IN) | RECOVERY (IN) | DESCRIPTION OF MATERIAL |
|---|---|---|---|---|---|
| | | | | | SURFACE ELEVATION |
| 0 | | | | | Water |
| 5 | 1 | SS | 24 | 24 | SILTY CLAY, BROWN AND GRAY, WET TO SATURATED, VERY SOFT, (CH) |
| | 2 | SS | 24 | 24 | SILTY FINE TO MEDIUM SAND, TRACE MARINE SHELL FRAGMENTS, BROWM, WET TO SATURATED, VERY LOOSE, (SM) |
| 10 | 3 | SS | 24 | 24 | SILTY CLAY, BROWN AND GRAY, WET TO SATURATED, VERY SOFT, (CH) |
| 15 | 4 | SS | 24 | 24 | SILTY ORGANIC CLAY, DARK BROWN WET TO SATURATED, MEDIUM STIFF, (OL) |
| 20 | 5 | SS | 24 | 24 | |
| 25 | 6 | SS | 24 | 24 | SILTY FINE TO MEDIUM SAND, TRACE MARINE SHELL FRAGMENTS, GRAY, WET TO SATURATED, MEDIUM DENSE, (SM) |
| 30 | 7 | SS | 24 | 24 | |
| 35 | 8 | SS | 24 | 24 | SILTY FINE TO MEDIUM SAND, TRACE CLAY AND MARINE SHELL FRAGMENTS, GRAY, WET TO SATURATED, LOOSE TO MEDIUM DENSE, (SM) |
| 40 | 9 | SS | 24 | 24 | |
| 45 | 10 | SS | 24 | 24 | |
| 50 | 11 | SS | 24 | 24 | |
| 55 | | | | | END OF BORING @ 60.0' (18.29m) |

CALIBRATED PENETROMETER Kg/cm2 (1 2 3 4 5+) | PLASTIC LIMIT % | WATER CONTENT % | LIQUID LIMIT % | STANDARD PENETRATION BLOWS/mm (10 20 30 40 50+)

THE STRATIFICATION LINES REPRESENT THE APPROXIMATE BOUNDARY LINES BETWEEN SOIL TYPES IN-SITU THE TRANSITION MAY BE GRADUAL

| | | | |
|---|---|---|---|
| WL | WS OR ▽D BORING STARTED 11-3-97 | | |
| WL BCR ACR | BORING COMPLETED 11-3-97 | CAVE IN DEPTH ⊕ | |
| WL | RIG FOREMAN FISHBURNE | DRILLING METHOD WS | |

REVISIONS

| SYM. | DESCRIPTION | DATE | APPROVED |
|---|---|---|---|

DESIGNED & ENGINEERED BY: LANTDIV NAVAL FACILITIES ENGINEERING COMMAND

SEAL

APPROVED
ACTIVITY - SATISFACTORY TO
DATE
APPROVED
FOR EFD FOR COMMANDER NAVFAC
1/25/99
DATE

| A/E | EFD |
|---|---|
| DESIGN | DGB |
| DRAWN | MBS |
| REVIEW | KAN |
| QC | |
| CHIEF ARCH./ ENGR. | |
| PROJECT MANAGER | DWB |
| FIRE PROTECTION | DWR |
| BRANCH MANAGER | KAN |
| DESIGN DIRECTOR | |

DEPARTMENT OF THE NAVY
NAVAL FACILITIES ENGINEERING COMMAND
ATLANTIC DIVISION
NAVAL STATION NORFOLK, VIRGINIA

# PIER 2 REPLACEMENT

BORINGS 15, 16, 17 AND 18

| | |
|---|---|
| CODE ID. NO. 80091 | SIZE D |
| SCALE: | NONE |
| EFD NO. | 493966 |
| STA. PROJ. NO. | P-355 |
| SPEC. NO. | 05-97-7041 |
| CONSTR. CONTR. NO. | N62470-97-B-7041 |
| NAVFAC DRAWING NO. | 439366 |
| SHEET | 76 OF 240 |

B-8

DRAWFORM REVISION 27 JULY 98

FILENAME: 7041B8.DWG; PLOT SCALE: 1" = 1'; SAVED ON 01/11/99 AT 09:53; XREFS: NONE

## BORING NO.19

CLIENT: UNITED STATES NAVY | JOB #: N2585 | BORING #: B-19 | SHEET: 1 OF 1
PROJECT NAME: PIER 2 REPLACEMENT DO-0001 | ARCHITECT-ENGINEER: UNITED STATES NAVY
SITE LOCATION: DECATUR AVE., NORFOLK, VIRGINIA

| DEPTH (FT) | SAMPLE NO. | SAMPLE TYPE | SAMPLE DISTANCE (IN) | RECOVERY (IN) | DESCRIPTION OF MATERIAL |
|---|---|---|---|---|---|
| | | | | | SURFACE ELEVATION |
| 0 | | | | | Water |
| 20 | 1 | SS | 24 | 24 | SILTY CLAY, TRACE FINE SAND, BROWN AND GRAY, WET TO SATURATED, VERY SOFT, (CH) |
| 25 | 2 | SS | 24 | 24 | |
| 30 | 3 | SS | 24 | 24 | |
| 35 | 4 | SS | 24 | 24 | SILTY ORGANIC CLAY, WITH PEAT STRATUM FROM 34 TO 36.5 FEET, DARK BROWN, WET TO SATURATED, (OL) |
| | 5 | SS | 24 | 24 | |
| 40 | 6 | SS | 24 | 24 | SILTY FINE TO MEDIUM SAND. TRACE CLAY AND PEAT, GRAY, WET TO SATURATED, MEDIUM DENSE, (SM) |
| 45 | 7 | SS | 24 | 24 | SILTY FINE TO MEDIUM SAND. TRACE MARINE SHELL FRAGMENTS, GRAYISH BROWN TO GRAY, WET TO SATURATED, MEDIUM DENSE, (SP-SM) |
| 50 | 8 | SS | 24 | 24 | |
| 55 | 9 | SS | 24 | 24 | SILTY FINE SAND, TRACE MARINE SHELL FRAGMENTS, GRAY, WET TO SATURATED, MADIUM DENSE, (SM) |
| 60 | 8 | SS | 24 | 24 | |

CALIBRATED PENETROMETER Kg/cm2 (1 2 3 4 5+) | PLASTIC LIMIT % X | WATER CONTENT % | LIQUID LIMIT % Δ
STANDARD PENETRATION BLOWS/mm ⊗ (10 20 30 40 50+)

DEPTH (m): 1m, 5m, 10m, 15m

| | |
|---|---|
| 1 | WOH |
| 2 | WOH |
| 3 | WOH |
| 4 | 16 |
| 5 | N/A |
| 6 | 12 |
| 7 | 21 |
| 8 | 21 |
| 9 | 28 |
| 8 | 28 |

END OF BORING @ 60.0' (18.29m)

THE STRATIFICATION LINES REPRESENT THE APPROXIMATE BOUNDARY LINES BETWEEN SOIL TYPES IN-SITU THE TRANSITION MAY BE GRADUAL

WL 15 FEET (4.57m) WS OR MD | BORING STARTED 11-3-97 | CAVE IN DEPTH ⊕
WL | BCR | ACR | BORING COMPLETED 11-3-97
WL | RIG | FOREMAN FISHBURNE | DRILLING METHOD WS

## BORING NO.20

CLIENT: UNITED STATES NAVY | JOB #: N2585 | BORING #: B-20 | SHEET: 1 OF 1
PROJECT NAME: PIER 2 REPLACEMENT DO-0001 | ARCHITECT-ENGINEER: UNITED STATES NAVY
SITE LOCATION: DECATUR AVE., NORFOLK, VIRGINIA

| DEPTH (FT) | SAMPLE NO. | SAMPLE TYPE | SAMPLE DISTANCE (IN) | RECOVERY (IN) | DESCRIPTION OF MATERIAL |
|---|---|---|---|---|---|
| | | | | | SURFACE ELEVATION |
| 0 | | | | | Water |
| 25 | 1 | SS | 24 | 24 | SILTY CLAY, TRACE FINE SAND FROM 27 TO 34.2 FEET, BROWN AND GRAY, WET TO SATURATED, VERY SOFT, (CH) |
| 30 | 2 | SS | 24 | 24 | |
| 35 | 3 | SS | 24 | 24 | SILTY CLAY, TRACE MAEINE SHELL FRAGMENTS, DARK BROWN, WET TO SATURATED, VERY SOFT, (CL) |
| 40 | 4 | SS | 24 | 24 | SILTY FINE TO MEDIUM SAND. TRACE CLAY AND MARINE SHELL FRAGMENTS, GRAY, WET TO SATURATED, MEDIUM DENSE, (SM) |
| 45 | 5 | SS | 24 | 24 | |
| 50 | 6 | SS | 24 | 24 | |
| 55 | 7 | SS | 24 | 24 | |
| 60 | 8 | SS | 24 | 24 | |

CALIBRATED PENETROMETER Kg/cm2 (1 2 3 4 5+) | PLASTIC LIMIT % X | WATER CONTENT % | LIQUID LIMIT % Δ
STANDARD PENETRATION BLOWS/mm ⊗ (10 20 30 40 50+)

DEPTH (m): 1m, 5m, 10m, 15m

| | |
|---|---|
| 1 | WOH |
| 2 | WOH |
| 3 | WOH |
| 4 | 2 |
| 5 | 18 |
| 6 | 16 |
| 7 | 14 |
| 8 | 19 |
| 8 | 19 |

END OF BORING @ 60.0' (18.29m)

THE STRATIFICATION LINES REPRESENT THE APPROXIMATE BOUNDARY LINES BETWEEN SOIL TYPES IN-SITU THE TRANSITION MAY BE GRADUAL

WL 15 FEET (4.57m) WS OR MD | BORING STARTED 11-3-97 | CAVE IN DEPTH ⊕
WL | BCR | ACR | BORING COMPLETED 11-3-97
WL | RIG | FOREMAN FISHBURNE | DRILLING METHOD WS

## BORING NO.21

CLIENT: UNITED STATES NAVY | JOB #: N2585 | BORING #: B-21 | SHEET: 1 OF 1
PROJECT NAME: PIER 2 REPLACEMENT DO-0001 | ARCHITECT-ENGINEER: UNITED STATES NAVY
SITE LOCATION: DECATUR AVE., NORFOLK, VIRGINIA

| DEPTH (FT) | SAMPLE NO. | SAMPLE TYPE | SAMPLE DISTANCE (IN) | RECOVERY (IN) | DESCRIPTION OF MATERIAL |
|---|---|---|---|---|---|
| | | | | | SURFACE ELEVATION |
| 0 | | | | | Water |
| 20 | 1 | SS | 24 | 24 | SILTY CLAY, BROWN AND GRAY, WET TO SATURATED, VERY SOF, (CH) |
| 25 | 2 | SS | 24 | 24 | |
| 30 | 3 | SS | 24 | 24 | |
| 35 | 4 | SS | 24 | 24 | |
| 40 | 5 | SS | 24 | 24 | |
| 45 | 6 | SS | 24 | 24 | SILTY FINE TO MEDIUM SAND, TRACE CLAY AND MARINE SHELL FRAGMENTS, GRAY, WET TO SATURATED, MEDIUM DENSE, (SM) |
| 50 | 7 | SS | 24 | 24 | |
| 55 | 10 | SS | 24 | 24 | |
| 60 | 11 | SS | 24 | 24 | |

CALIBRATED PENETROMETER Kg/cm2 (1 2 3 4 5+) | PLASTIC LIMIT % X | WATER CONTENT % | LIQUID LIMIT % Δ
STANDARD PENETRATION BLOWS/mm ⊗ (10 20 30 40 50+)

DEPTH (m): 1m, 5m, 10m, 15m

| | |
|---|---|
| 1 | WOH |
| 2 | WOH |
| 3 | WOH |
| 4 | WOH |
| 5 | WOH |
| 6 | 13 |
| 7 | 17 |
| 10 | 20 |
| 11 | 21 |

END OF BORING @ 60.0' (18.29m)

THE STRATIFICATION LINES REPRESENT THE APPROXIMATE BOUNDARY LINES BETWEEN SOIL TYPES IN-SITU THE TRANSITION MAY BE GRADUAL

WL 15 FEET (4.57m) WS OR MD | BORING STARTED 10-30-97 | CAVE IN DEPTH ⊕
WL | BCR | ACR | BORING COMPLETED 10-30-97
WL | RIG | FOREMAN FISHBURNE | DRILLING METHOD WS

## BORING NO.22

CLIENT: UNITED STATES NAVY | JOB #: N2585 | BORING #: B-22 | SHEET: 1 OF 1
PROJECT NAME: PIER 2 REPLACEMENT DO-0001 | ARCHITECT-ENGINEER: UNITED STATES NAVY
SITE LOCATION: DECATUR AVE., NORFOLK, VIRGINIA

| DEPTH (FT) | SAMPLE NO. | SAMPLE TYPE | SAMPLE DISTANCE (IN) | RECOVERY (IN) | DESCRIPTION OF MATERIAL |
|---|---|---|---|---|---|
| | | | | | SURFACE ELEVATION |
| 0 | | | | | Water |
| 20 | 1 | SS | 24 | 24 | SILTY CLAY, BROWN AND GRAY, WET TO SATURATED, VERY SOFT, (CH) |
| 25 | 2 | SS | 24 | 24 | |
| 30 | 3 | SS | 24 | 24 | SILTY FINE TO MEDIUM SAND, TRACE MARINE SHELL FRAGMENTS, GRAY, WET TO SATURATED, MEDIUM DENSE, (SM) |
| 35 | 4 | SS | 24 | 24 | |
| 40 | 5 | SS | 24 | 24 | |
| 45 | 6 | SS | 24 | 24 | SILTY FINE TO MEDIUM SAND, TRACE CLAY AND MARINE SHELL FRAGMENTS, GRAY, WET TO SATURATED, MEDIUM DENSE TO DENSE, (SM) |
| 50 | 7 | SS | 24 | 24 | |
| 55 | 8 | SS | 24 | 24 | |
| 60 | 8 | SS | 24 | 24 | |

CALIBRATED PENETROMETER Kg/cm2 (1 2 3 4 5+) | PLASTIC LIMIT % X | WATER CONTENT % | LIQUID LIMIT % Δ
STANDARD PENETRATION BLOWS/mm ⊗ (10 20 30 40 50+)

DEPTH (m): 1m, 5m, 10m, 15m

| | |
|---|---|
| 1 | WOH |
| 2 | WOH |
| 3 | N/A |
| 4 | N/A |
| 5 | N/A |
| 6 | 19 |
| 7 | 38 |
| 8 | 18 |

END OF BORING @ 60.0' (18.29m)

THE STRATIFICATION LINES REPRESENT THE APPROXIMATE BOUNDARY LINES BETWEEN SOIL TYPES IN-SITU THE TRANSITION MAY BE GRADUAL

WL 15 FEET (4.57m) WS OR MD | BORING STARTED 10-31-97 | CAVE IN DEPTH ⊕
WL | BCR | ACR | BORING COMPLETED 10-31-97
WL | RIG | FOREMAN FISHBURNE | DRILLING METHOD WS

REVISIONS: SYM. | DESCRIPTION | DATE | APPROVED

DESIGNED & ENGINEERED BY: LANTDIV NAVAL FACILITIES ENGINEERING COMMAND

DEPARTMENT OF THE NAVY
NAVAL STATION
ATLANTIC DIVISION
NAVAL FACILITIES ENGINEERING COMMAND
NORFOLK, VIRGINIA

NAVAL STATION NORFOLK, VIRGINIA
PIER 2 REPLACEMENT
BORINGS 19, 20, 21 AND 22

SEAL

APPROVED
ACTIVITY - SATISFACTORY TO
DATE
APPROVED
FOR EFD FOR COMMANDER NAVFAC
1/25/99
DATE

| A/E | EFD |
|---|---|
| DESIGN | DGB |
| DRAWN | MBS |
| REVIEW | KAN |
| QC | |
| CHIEF ARCH./ ENGR. | |
| PROJECT MANAGER | DWB |
| FIRE PROTECTION | DWR |
| BRANCH MANAGER | KAN |
| DESIGN DIRECTOR | |

CODE ID. NO. 80091 | SIZE D
SCALE: NONE
EFD NO. 493967
STA. PROJ. NO. P-355
SPEC. NO. 05-97-7041
CONSTR. CONTR. NO. N62470-97-B-7041
NAVFAC DRAWING NO. 4393967
SHEET 77 OF 240
B-9

FILENAME: 7041B9.DWG, PLOT SCALE: 1" = 1', SAVED ON 01/11/99 AT 09:55, XREFS: NONE

DRAWFORM REVISION 27 JULY 98

## BORING NO.23

CLIENT: UNITED STATES NAVY | JOB #: N2585 | BORING #: B-23 | SHEET: 1 OF 1
PROJECT NAME: PIER 2 REPLACEMENT DO-0001 | ARCHITECT-ENGINEER: UNITED STATES NAVY
SITE LOCATION: DECATUR AVE., NORFOLK, VIRGINIA

| DEPTH (FT) | SAMPLE NO. | SAMPLE TYPE | SAMPLE DISTANCE (IN) | RECOVERY (IN) | DESCRIPTION OF MATERIAL | DEPTH (m) | STANDARD PENETRATION BLOWS/mm |
|---|---|---|---|---|---|---|---|
| | | | | | SURFACE ELEVATION | | |
| 0 | | | | | Water | | |
| 20 | 1 | SS | 24 | 24 | SILTY CLAY, BROWN AND GRAY, WET TO SATURATED, VERY SOFT, (CH) | 1m | WOH |
| 25 | 2 | SS | 24 | 24 | | | WOH |
| 30 | 3 | SS | 24 | 24 | | | WOH |
| 35 | 4 | SS | 24 | 24 | SILTY CLAY, TRACE WOOD FRAGMENTS, DARK BROWN, WET TO SATURATED, VERY SOFT, (CL) | 10m | 2 |
| 40 | 5 | SS | 24 | 24 | SILTY CLAY, DARK BROWN, WET TO SATURATED, VERY SOFT, (CL) | | 3 |
| 45 | 6 | SS | 24 | 24 | SILTY FINE TO MEDIUM SAND. TRACE CLAY AND MARINE SHELL FRAGMENTS AND MEDIUM GRAVEL FROM 58 TO 60 FEET, GRAY, WET TO SATURATED, MEDIUM DENSE, (SM) | | 18 |
| 50 | 7 | SS | 24 | 24 | | 15m | 24 |
| 55 | 8 | SS | 24 | 24 | | | 30 |
| 60 | 9 | SS | 24 | 24 | | | 21 |
| | | | | | END OF BORING @ 60.0' (18.29m) | | |

CALIBRATED PENETROMETER Kg/cm2 (1 2 3 4 5+) | PLASTIC LIMIT % X | WATER CONTENT % | LIQUID LIMIT % Δ | STANDARD PENETRATION BLOWS/mm (10 20 30 40 50+)

THE STRATIFICATION LINES REPRESENT THE APPROXIMATE BOUNDARY LINES BETWEEN SOIL TYPES IN-SITU THE TRANSITION MAY BE GRADUAL

| | | | |
|---|---|---|---|
| WL 15 FEET (4.57m) WS OR FT | BORING STARTED 10-31-97 | | |
| WL BCR ACR | BORING COMPLETED 10-31-97 | CAVE IN DEPTH ● | |
| WL | RIG FOREMAN FISHBURNE | DRILLING METHOD WS | |

## BORING NO.24

CLIENT: UNITED STATES NAVY | JOB #: N2585 | BORING #: B-24 | SHEET: 1 OF 1
PROJECT NAME: PIER 2 REPLACEMENT DO-0001 | ARCHITECT-ENGINEER: UNITED STATES NAVY
SITE LOCATION: DECATUR AVE., NORFOLK, VIRGINIA

| DEPTH (FT) | SAMPLE NO. | SAMPLE TYPE | SAMPLE DISTANCE (IN) | RECOVERY (IN) | DESCRIPTION OF MATERIAL | DEPTH (m) | STANDARD PENETRATION BLOWS/mm |
|---|---|---|---|---|---|---|---|
| | | | | | SURFACE ELEVATION | | |
| 0 | | | | | 3" ASPHALT/4" STONE | | |
| 5 | 1 | SS | 24 | 24 | FINE SANDY CLAY, BROWN AND GRAY, MOIST, MEDIUM STIFF, (CL/FILL) | 1m | 8 |
| | 2 | SS | 24 | 24 | SILTY FINE TO MEDIUM SAND, ORANGISH BROWN AND TAN, MOIST, LOOSE, (SP-SM) | | 10 |
| | 3 | SS | 24 | 24 | | | 8 |
| | 4 | SS | 24 | 24 | SILTY FINE TO MEDIUM SAND, GRAY, WET TO SATURATED, VERY LOOSE TO LOOSE, (SM) | | 8 |
| 10 | 5 | SS | 24 | 24 | | | 2 |
| | 6 | SS | 24 | 24 | | 5m | 5 |
| 15 | 7 | SS | 24 | 24 | | | 9 |
| 20 | 8 | SS | 24 | 24 | SILTY CLAY, GRAY WEY TO SATURATED, VERY SOFT, (CL) | | 3 |
| 25 | 9 | SS | 24 | 24 | SILTY ORGANIC CLAY, DARK BROWN, WET TO SATURATED, VERY SOFT TO MEDIUM STIFF, (OL) | | 3 |
| 30 | 10 | SS | 24 | 24 | SILTY ORGANIC CLAY, WITH PEAT STRATUM FROM 45 TO 47 FEET, DARK BROWN, WET TO SATURATED, VERY SOFT TO MEDIUM STIFF, (OL) | 10m | 5 |
| 35 | 11 | SS | 24 | 24 | | | 5 |
| 40 | 12 | SS | 24 | 24 | | | 10 |
| 45 | 13 | SS | 24 | 24 | SILTY FINE TO MEDIUM SAND, TRACE MARINE SHELL FRAGMENTS, GRAY, WET, TO SATURATED, MEDIUM DENSE, (SM) | 15m | 15 |
| 50 | 14 | SS | 24 | 24 | | | 15 |
| 55 | 15 | SS | 24 | 24 | | | 19 |
| 60 | 16 | SS | 24 | 24 | | 20m | 20 |
| 65 | 17 | SS | 24 | 24 | | | 22 |
| 70 | 18 | SS | 24 | 24 | | | 20 |
| 75 | | | | | END OF BORING @ 75.0' (22.86m) | | |

CALIBRATED PENETROMETER Kg/cm2 (1 2 3 4 5+) | PLASTIC LIMIT % X | WATER CONTENT % | LIQUID LIMIT % Δ | STANDARD PENETRATION BLOWS/mm (10 20 30 40 50+)

THE STRATIFICATION LINES REPRESENT THE APPROXIMATE BOUNDARY LINES BETWEEN SOIL TYPES IN-SITU THE TRANSITION MAY BE GRADUAL

| | | | |
|---|---|---|---|
| WL 15 FEET (4.57m) WS OR FT | BORING STARTED 10-30-97 | | |
| WL BCR ACR | BORING COMPLETED 10-30-97 | CAVE IN DEPTH ● | |
| WL | RIG FOREMAN FISHBURNE | DRILLING METHOD WS | |

## BORING NO.25

CLIENT: UNITED STATES NAVY | JOB #: N2585 | BORING #: B-25 | SHEET: 1 OF 1
PROJECT NAME: PIER 2 REPLACEMENT DO-0001 | ARCHITECT-ENGINEER: UNITED STATES NAVY
SITE LOCATION: DECATUR AVE., NORFOLK, VIRGINIA

| DEPTH (FT) | SAMPLE NO. | SAMPLE TYPE | SAMPLE DISTANCE (IN) | RECOVERY (IN) | DESCRIPTION OF MATERIAL | DEPTH (m) | STANDARD PENETRATION BLOWS/mm |
|---|---|---|---|---|---|---|---|
| | | | | | SURFACE ELEVATION | | |
| 0 | 1 | SS | 24 | 24 | SILTY FINE TO MEDIUM SAND, BROWN MOIST, VERY LOOSE, (SM/FILL) | | 1 |
| | 2 | SS | 24 | 24 | FINE SANDY CLAY, BROWN MOIST, VERY SOIST, VERY SOFT, (OL) | 1m | 3 |
| 5 | 3 | SS | 24 | 24 | SILTY ORGANIC CLAY, DARK BROWN, MOIST, VERY SOFT, (OL) | | 5 |
| | 4 | SS | 24 | 24 | SILTY FINE TO MEDIUM SAND, ORANGISH BROWN, MOIST TO WET, LOOSE, (SM) | | 6 |
| 10 | 5 | SS | 24 | 24 | SILTY FINE TO MEDIUM SAND, TRACE MARINE SHELL FRAGMENTS, GRAY, WET TO SATURATED, VERY LOOSE TO LOOSE, (SM) | | 4 |
| | 6 | SS | 24 | 24 | | 5m | 2 |
| 15 | 7 | SS | 24 | 24 | | | 6 |
| 20 | 8 | SS | 24 | 24 | SILTY ORGANIC CLAY, DARK BROWN, WET TO SATURATED, SOFT, (OL) | | 4 |
| 25 | 9 | SS | 24 | 24 | SILTY FINE TO MEDIUM SAND, CLAY AND MARINE SHELL FRAGMENTS, GRAY, WET TO SATURATED, LOOSE TO MEDIUM DENSE, (SM) | | 7 |
| 30 | 4 | SS | 24 | 24 | | 10m | 7 |
| 35 | 5 | SS | 24 | 24 | Fine to Medium Sandy CLAY, With Wood Fragments, Gray, Wet to Saturated, Medium Stiff, (CL) | | 8 |
| 40 | 6 | SS | 24 | 24 | Silty Fine SAND, Trace Clay and Marine Shell Fragments, Gray, Wet to Saturated, Medium Dense, (SM) | | 17 |
| 45 | 7 | SS | 24 | 24 | | 15m | 14 |
| 50 | 8 | SS | 24 | 24 | | | 17 |
| 55 | 9 | SS | 24 | 24 | | | 19 |
| 60 | 16 | SS | 24 | 24 | | 20m | 22 |
| 65 | 17 | SS | 24 | 24 | | | 22 |
| 70 | 18 | SS | 24 | 24 | | | 26 |
| 75 | | | | | END OF BORING @ 75.0' (22.86m) | | |

CALIBRATED PENETROMETER Kg/cm2 (1 2 3 4 5+) | PLASTIC LIMIT % X | WATER CONTENT % | LIQUID LIMIT % Δ | STANDARD PENETRATION BLOWS/mm (10 20 30 40 50+)

THE STRATIFICATION LINES REPRESENT THE APPROXIMATE BOUNDARY LINES BETWEEN SOIL TYPES IN-SITU THE TRANSITION MAY BE GRADUAL

| | | | |
|---|---|---|---|
| WL 5.25 FEET (1.33m) WS OR FT | BORING STARTED 10-30-97 | | |
| WL BCR ACR | BORING COMPLETED 10-30-97 | CAVE IN DEPTH ● 5.5 FEET | |
| WL | RIG FOREMAN FISHBURNE | DRILLING METHOD WS | |

REVISIONS: SYM. | DESCRIPTION | DATE | APPROVED

DESIGNED & ENGINEERED BY: LANTDIV NAVAL FACILITIES ENGINEERING COMMAND

SEAL

APPROVED
ACTIVITY – SATISFACTORY TO
DATE
APPROVED
FOR EFD FOR COMMANDER NAVFAC
1/25/99
DATE

| A/E | EFD |
|---|---|
| DESIGN | DGB |
| DRAWN | MBS |
| REVIEW | KAN |
| QC | |
| CHIEF ARCH./ ENGR. | |
| PROJECT MANAGER | DWB |
| FIRE PROTECTION | DWB |
| BRANCH MANAGER | KAN |
| DESIGN DIRECTOR | |

DEPARTMENT OF THE NAVY — NAVAL FACILITIES ENGINEERING COMMAND
ATLANTIC DIVISION
NAVAL STATION NORFOLK, VIRGINIA
PIER 2 REPLACEMENT
BORINGS 23, 24 AND 25

| | |
|---|---|
| CODE ID. NO. 80091 | SIZE D |
| SCALE: NONE | |
| EFD NO. 493968 | |
| STA. PROJ. NO. P-355 | |
| SPEC. NO. 05-97-7041 | |
| CONSTR. CONTR. NO. N62470-97-B-7041 | |
| NAVFAC DRAWING NO. 439398 | |
| SHEET 78 OF 240 | |

B-10

DRAWFORM REVISION 27 JULY 98

FILENAME: 7041B10.DWG, PLOT SCALE: 1" = 1', SAVED ON 01/11/99 AT 09:56, XREFS: NONE

## LABORATORY TEST RESULTS

| BORING NO. | SAMPLE NUMBER | DEPTH IN FT. DEPTH IN (m) | MOISTURE CONTENT (%) | PERCENT PASSING # 200 (0.075mm) SIEVE | ATTERBERG LIMITS LL/PL/PI | USCS SYMBOL |
|---|---|---|---|---|---|---|
| B-3 | S-2 | 18.0 – 20.0 (5.49–6.10) | 110.9 | 96.8 | 90/31/59 | CH |
| B-3 | S-4 | 28.0 – 30.0 (8.53–9.14) | 117.0 | 89.5 | 73/27/46 | CH |
| B-3 | S-5 | 33.0 – 35.0 (9.24–10.67) | 60.6 | 97.0 | 68/28/40 | CH |
| B-3 | S-7 | 43.0 – 45.0 (13.11–13.72) | 33.4 | 21.0 | * | SM |
| B-3 | S-8 | 48.0 – 50.0 (14.63–15.24) | 39.3 | 32.9 | 33/29/4 | SM |
| B-3 | S-10 | 58.0 – 60.0 (17.68–18.29) | 57.2 | 24,3 | * | SM |
| B-3 | S-12 | 68.0 – 70.0 (20.73–21.34) | 37.2 | 23.9 | NONPLASTIC | SM |
| B-3 | S-14 | 78.0 – 80.0 (23.77–24.38) | 36.4 | 46.4 | 44/21/23 | SC |
| B-8 | S-3 | 28.0 – 30.0 (8.53–9.14) | 135.3 | 95.5 | 82/30/52 | CH |
| B-8 | S-6 | 43.0 – 45.0 (13.11–13.72) | 36.8 | 57.5 | 39/26/13 | CL |
| B-8 | S-7 | 48.0 – 50.0 (14.63–15.24) | 31.7 | 21.9 | * | SM |
| B-8 | S-8 | 53.0 – 55.0 (16.15–16.76) | 23.1 | 12.7 | * | SM |
| B-8 | S-10 | 63.0 – 65.0 (19.20–19.81) | 40.7 | 41.5 | * | SC |
| B-8 | S-15 | 88.0 – 90.0 (26.82–27.43) | 32.4 | 30.0 | 39/22/17 | SC |
| B-19 | S-3 | 28.0 – 30.0 (8.53–9.14) | 86.3 | 78.9 | 59/21/38 | CH |
| B-19 | S-4 | 33.0 – 35.0 (10.06–10.67) | 191.4 | * | * | OL+PT |
| B-19 | S-5 | 38.0 – 40.0 (11.58–12.19) | 39.0 | 15.2 | * | SM |
| B-19 | S-7 | 48.0 – 50.0 (14.63–15.24) | 18.1 | 10.5 | * | SP–SM |
| B-19 | S-9 | 58.0 – 60.0 (17.68–18.29) | 34.0 | 37.8 | * | SM |

NOTES:
1. NOTES: ( * ) INDICATES TEST NOT PERFORMED
2. SOIL TEST IN ACCORDANCE WITH APPLICABLE ASTM STANDARDS
3. SOIL CLASSIFICATION IN ACCORDANCE WITH UNIFIED SOIL CLASSIFICATION SYSTEM

## SHELBY TUBE LABORATORY TEST SUMMARY

| BORING NUMBER | SAMPLE NUMBER | DEPTH IN FT. (METERS) | MOISTURE CONTENT (%) | PERCENT PASSING # 200 (0.075mm) SIEVE | Qu tsf (Kg/cm2) | DRY DENSITY pcf (Kg/m3) | USCS SYMBOL |
|---|---|---|---|---|---|---|---|
| B–7 | SHELBY TUBE | 26.0 – 26.5 (7.9 – 8.0) | 160.5 | 99.4 | * | 31.86 (510.34) | CH |
| B–11 | SHELBY TUBE | 28.5 – 29.0 (8.7 – 8.8) | 85.1 | 97.9 | 0.26 (0.26) | 49.64 (795.16) | CH |
| B–18 | SHELBY TUBE | 30.5 – 31.0 (9.3 – 9.4) | 108.6 | 77.8 | * | 40.06 (641.70) | OL |
| B–19 | SHELBY TUBE | 37.0 – 37.5 (11.3 – 11.5) | 61.6 | 89.2 | 4.42 (4.42) | 60.76 (973.28) | OL |
| B–25 | SHELBY TUBE | 24.0 – 24.5 (7.3 – 7.4) | 97.4 | 85.0 | 5.51 (5.51) | 43.86 (702.57) | OL |

## SOIL BORING GENERAL NOTES

1. BORINGS WERE ADVANCED USING HOLLOW STEM AUGER AND MUD ROTARY DRILLING TECHNIQUES.
2. COLUMN INDICATES DEPTH OF SAMPLE AND STANDARD PENETRATION TEST DATA.
   A. STANDARD PENETRATION TEST (ASTM D–1586) – DRIVING A 5.08 CM O.D., 3.5 CM I.D., SAMPLER A DISTANCE OF 300 MM INTO UNDISTURBED SOIL WITH A 63.6 KG HAMMER FREE FALLING A DISTANCE OF 76.2 CM. 'WOH' INDICATES WEIGHT OF HAMMER ADVANCED SAMPLER 0.305m.
3. IN THE COLUMN "DESCRIPTION OF MATERIAL" THE HORIZONTAL LINE INDICATES STRATA CHANGES. A SOLID LINE REPRESENTS AN ACTUALLY OBSERVED CHANGE. A DASHED LINE REPRESENTS AN ESTIMATED CHANGE.
4. ALL DEPTHS AND LOCATIONS ARE APPROXIMATE. BORING DEPTHS AND GROUNDWATER OBSERVATIONS ARE REFERENCED TO THE GROUND SURFACE EXISTING AT TIME OF BORING. FOR BORING LOCATIONS SEE SHEET CIVIL SHEETS.
5. BORINGS DRILLED BY ENGINEERING CONSULTING SERVICES, LTD.
6. THE SOIL CLASSIFICATION INDICATED (SP, ML, CL, ETC.) ARE FROM THE UNIFIED SOIL CLASSIFICATION SYSTEM (USCS). DESCRIPTION OF SOIL AND CLASSIFICATION IN ACCORDANCE WITH USCS IS BASED ON VISUAL EXAMINATION SUPPLEMENTED BY LABORATORY TESTS.
7. THE NATURAL MOISTURE CONTENT AND ATTERBERG LIMITS OF SOIL SAMPLES WAS DETERMINED IN ACCORDANCE WITH ASTM D–2216 AND 4318, RESPECTIVELY.
8. BORINGS ARE NOT SHOWN TO SCALE.
9. FOR SOIL SAMPLES CONSISTING OF TWO OR MORE TYPES, RELATIVE PROPORTIONS OF SECONDARY COMPONENTS (PERCENT BY WEIGHT) ARE INDICATED AS FOLLOWS:

| DESCRIPTIVE TERM | PERCENT |
|---|---|
| TRACE | 1–10 |
| LITTLE | 11–20 |
| SOME | 21–35 |
| AND | 36–50 |

10. WATER LEVEL OBSERVATIONS WERE MADE AT THE TIME OF THE SUBSURFACE INVESTIGATIONS AND DO NOT NECESSARILY REPRESENT GROUNDWATER ELEVATIONS AT THE TIME OF CONSTRUCTION. GROUNDWATER LEVELS MAY FLUCTUATE WITH SEASONAL CHANGE, TEMPERATURE VARIATION, RAINFALL, AND TIDAL INFLUENCES AND THEREFORE SHOULD NOT BE CONSTRUED AS ABSOLUTE. ALL BORINGS EXCEPT B–15, B–16, B–24 AND B–25 PERFORMED OVER WATER FROM BARGE. WATER DEPTHS FOR THESE BORINGS WILL FLUCTUATE WITH THE TIDE AND SHOULD NOT BE CONSEDERED ABSOLUTE. SEE CIVIL SHEETS FOR SOUNDINGS FOR INFORMATION CONCERNING MUDLINE ELEVATIONS.
11. IN THE "REMARKS" COLUMN – "IAD" INDICATES DEPTH OF GROUNDWATER OBSERVED IMMEDIATELY AFTER DRILLING; "24 HOUR" INDICATES THE GROUNDWATER OBSERVATION 24 HOURS AFTER DRILLING; AND "CAVE–IN" INDICATES THE BOREHOLE COLLAPSED AT THE INDICATED DEPTH AT THE INDICATED TIME.

## SIEVE ANALYSIS RESULTS

| Boring No.: Depth in feet: (Depth in meters) | | B–3 28–30 (8.53–9.14) | B–3 43–45 (13.11–13.72) | B–3 58–60 (17.68–18.29) | B–8 48–50 (14.63–15.24) | B–8 53–55 (16.15–16.76) | B–8 48–50 (14.63–15.24) | B–19 38–40 (11.58–12.19) | B–19 48–50 (14.63–15.24) | B–19 58–60 (17.68–18.29) |
|---|---|---|---|---|---|---|---|---|---|---|
| ASTM D422 – % Passing Sieve | | | | | | | | | | |
| INCHES | MILLIMETERS | | | | | | | | | |
| 3 | 75.0 | 100.0 | 100.0 | 100.0 | 100.0 | 100.0 | 100.0 | 100.0 | 100.0 | 100.0 |
| 1–1/2 | 37.5 | 100.0 | 100.0 | 100.0 | 100.0 | 100.0 | 100.0 | 100.0 | 100.0 | 100.0 |
| 3/4 | 19.0 | 100.0 | 100.0 | 100.0 | 100.0 | 100.0 | 100.0 | 100.0 | 100.0 | 100.0 |
| 3/8 | 9.5 | 100.0 | 98.8 | 87.9 | 100.0 | 100.0 | 100.0 | 100.0 | 100.0 | 100.0 |
| No. 4 | 4.75 | 100.0 | 91.2 | 70.0 | 100.0 | 97.0 | 100.0 | 99.2 | 93.3 | 100.0 |
| No. 10 | 2.00 | 99.6 | 80.0 | 53.2 | 99.9 | 94.9 | 99.2 | 98.8 | 78.6 | 100.0 |
| No. 40 | 0.425 | 97.8 | 58.3 | 45.1 | 99.2 | 68.6 | 98.3 | 97.0 | 32.5 | 99.9 |
| No. 60 | 0.250 | 96.6 | 50.2 | 42.5 | 96.0 | 38.0 | 96.5 | 90.6 | 21.5 | 99.2 |
| No. 100 | 0.150 | 94.2 | 32.3 | 31.6 | 42.7 | 21.9 | 64.0 | 32.2 | 13.7 | 63.1 |
| No. 200 | 0.075 | 89.5 | 21.0 | 24.3 | 21.9 | 12.7 | 41.5 | 15.2 | 10.5 | 37.8 |

REVISIONS

| SYM. | DESCRIPTION | DATE | APPROVED |
|---|---|---|---|

DESIGNED & ENGINEERED BY: LANTDIV NAVAL FACILITIES ENGINEERING COMMAND

SEAL

APPROVED

ACTIVITY – SATISFACTORY TO

DATE

APPROVED
FOR EFD FOR COMMANDER NAVFAC
1/25/99

DATE

| A/E | EFD |
|---|---|
| DESIGN | DGB |
| DRAWN | MBS |
| REVIEW | KAN |
| QC | |
| CHIEF ARCH./ ENGR. | |
| PROJECT MANAGER | DWB |
| FIRE PROTECTION | DWR |
| BRANCH MANAGER | KAN |
| DESIGN DIRECTOR | |

NAVAL FACILITIES ENGINEERING COMMAND
ATLANTIC DIVISION
NORFOLK, VIRGINIA
DEPARTMENT OF THE NAVY
NAVAL STATION
NORFOLK, VIRGINIA
PIER 2 REPLACEMENT
SOIL BORINGS NOTES

| | |
|---|---|
| CODE ID. NO. 80091 | SIZE D |
| SCALE: AS NOTED | |
| EFD NO. 493969 | |
| STA. PROJ. NO. P–355 | |
| SPEC. NO. 05–97–7041 | |
| CONSTR. CONTR. NO. N62470–97–B–7041 | |
| NAVFAC DRAWING NO. 439.3969 | |
| SHEET 79 OF 240 | |

B–11

FILENAME: 7041B11.DWG, PLOT SCALE: 1" = 1', SAVED ON 01/11/99 AT 09:57, XREFS: NONE

DRAWFORM REVISION 27 JULY 98

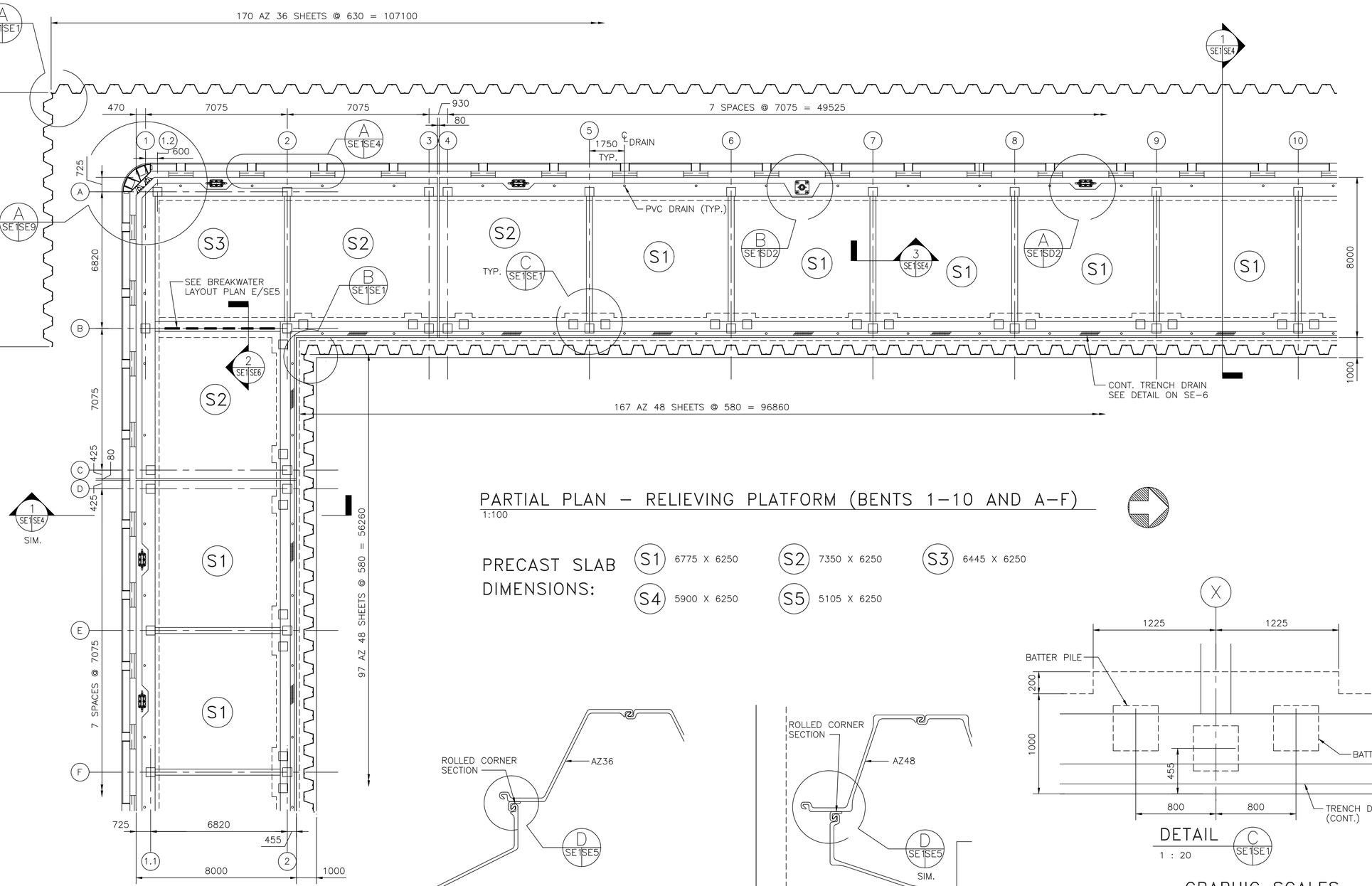


## PARTIAL PLAN – RELIEVING PLATFORM (BENTS 1–10 AND A–F)

1:100

PRECAST SLAB DIMENSIONS:

- S1 6775 X 6250
- S2 7350 X 6250
- S3 6445 X 6250
- S4 5900 X 6250
- S5 5105 X 6250

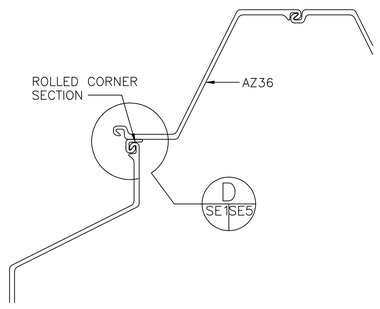


DETAIL A / SE1SE1 — 1 : 10

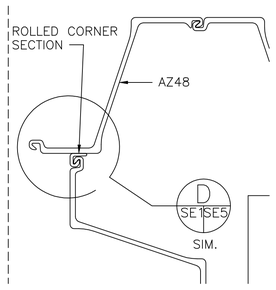


DETAIL B / SE1SE1 — 1 : 10

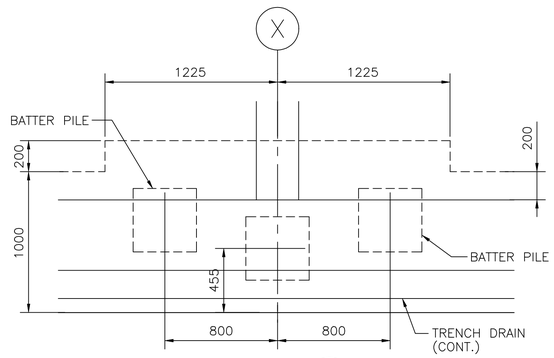


DETAIL C / SE1SE1 — 1 : 20

## GRAPHIC SCALES

1:10 — 0 100 500 1000mm

1:20 — 0 500 1000 2000mm

1:100 — 01000 5000 10000mm

REVISIONS

| SYM. | DESCRIPTION | DATE | APPROVED |
|---|---|---|---|

DESIGNED & ENGINEERED BY: LANTDIV NAVAL FACILITIES ENGINEERING COMMAND

SEAL

APPROVED

ACTIVITY – SATISFACTORY TO

DATE

APPROVED FOR EFD FOR COMMANDER NAVFAC 1/25/99

DATE

| | A/E | EFD |
|---|---|---|
| DESIGN | | RCS |
| DRAWN | | RCS |
| REVIEW | | HDK |
| QC | | |
| CHIEF | ARCH./ ENGR. | |
| PROJECT MANAGER | | DWR |
| FIRE PROTECTION | | DWR |
| BRANCH MANAGER | | |
| DESIGN DIRECTOR | | |

DEPARTMENT OF THE NAVY
NAVAL STATION
ATLANTIC DIVISION
NAVAL FACILITIES ENGINEERING COMMAND
NORFOLK, VIRGINIA

NAVAL STATION NORFOLK, VIRGINIA

# PIER 2 REPLACEMENT

RELIEVING PLATFORM – PARTIAL PLAN

| | |
|---|---|
| CODE ID. NO. 80091 | SIZE D |
| SCALE: | AS NOTED |
| EFD NO. | 494038 |
| STA. PROJ. NO. | P-355 |
| SPEC. NO. | 05-97-7041 |
| CONSTR. CONTR. NO. | N62470-97-B-7041 |
| NAVFAC DRAWING NO. | 4394038 |
| SHEET | 148 OF 240 |

SE-1

DRAWFORM REVISION 27 JULY 98

FILENAME: 7041SE01.DWG, PLOT SCALE: 1=1, SAVED ON 01/08/99 AT 12:27, XREFS: NONE

8 7 6 5 4 3 2 1

D C B A

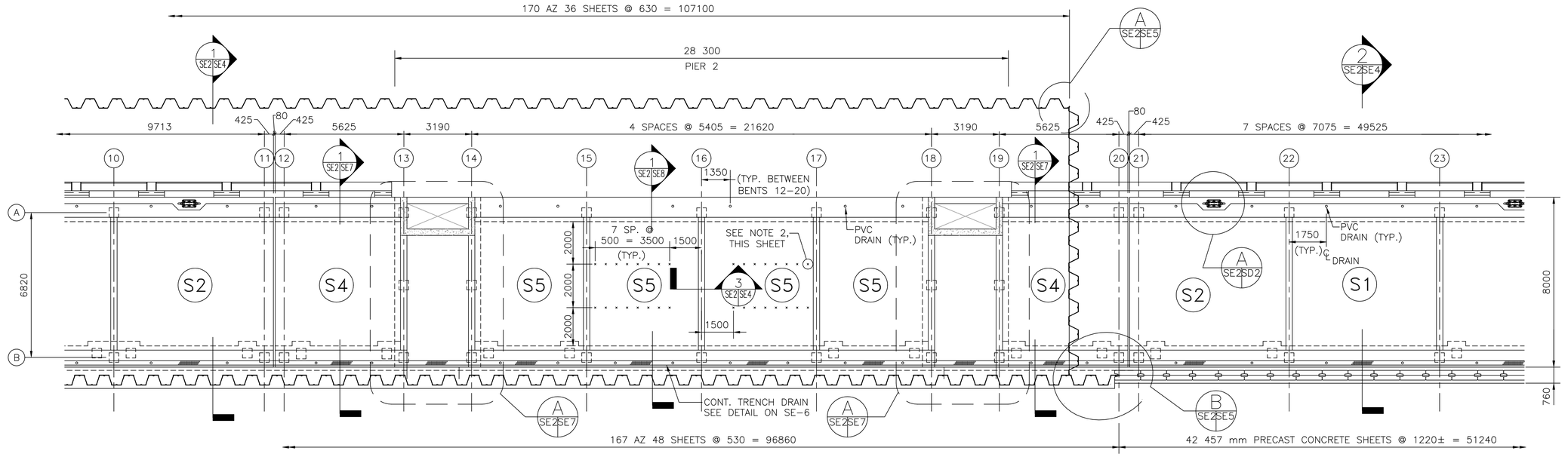


## PARTIAL PLAN – RELIEVING PLATFORM (BENTS 10 THROUGH 23)

1:100

## NOTES:

1. PRECAST SLAB PANELS ARE DENOTED (SX) ON PLANS. SEE SHEET SE-1 FOR PANEL DIMENSIONS.
2. CAST 13-MM HEADED INSERTS (SEE DETAIL, SHEET SA-2,INTO THE BOTTOMS OF THESE SLABS AS SUPPORTS FOR PRIMARY ELECTRICAL AND COMMUNICXATIONS CONDUITS.

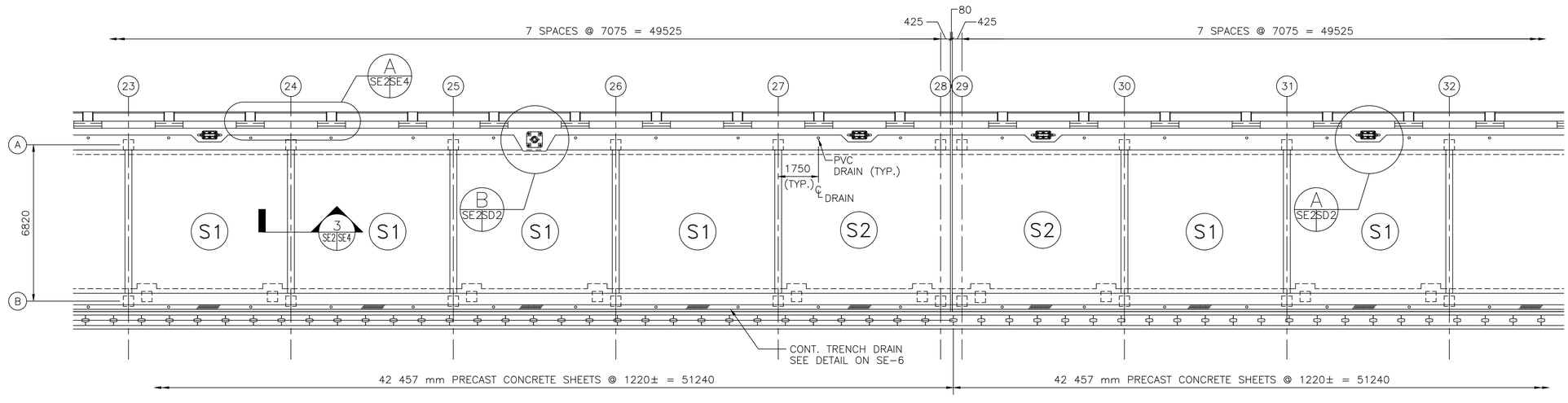


## PARTIAL PLAN – RELIEVING PLATFORM (BENTS 23 THROUGH 32)

1:100

## GRAPHIC SCALE

1:100 0 1000 5000 10000mm

REVISIONS

| SYM. | DESCRIPTION | DATE | APPROVED |
|---|---|---|---|

DESIGNED & ENGINEERED BY: LANTDIV NAVAL FACILITIES ENGINEERING COMMAND

SEAL

APPROVED

ACTIVITY – SATISFACTORY TO

DATE

APPROVED
FOR EFD FOR COMMANDER NAVFAC
1/25/99

DATE

| A/E | EFD |
|---|---|
| DESIGN | RCS |
| DRAWN | RCS |
| REVIEW | HDK |
| QC | |
| CHIEF ARCH./ ENGR. | |
| PROJECT MANAGER | DWB |
| FIRE PROTECTION | DWB |
| BRANCH MANAGER | |
| DESIGN DIRECTOR | |

DEPARTMENT OF THE NAVY
NAVAL FACILITIES ENGINEERING COMMAND
ATLANTIC DIVISION
NAVAL STATION
NORFOLK, VIRGINIA

# PIER 2 REPLACEMENT

RELIEVING PLATFORM – PARTIAL PLAN

| | |
|---|---|
| CODE ID. NO. 80091 | SIZE D |
| SCALE: 1:100 | |
| EFD NO. 494039 | |
| STA. PROJ. NO. P-355 | |
| SPEC. NO. 05-97-7041 | |
| CONSTR. CONTR. NO. N62470-97-B-7041 | |
| NAVFAC DRAWING NO. 4394039 | |
| SHEET 149 OF 240 | |

SE-2

DRAWFORM REVISION 27 JULY 98

FILENAME: 7041SE02.DWG, PLOT SCALE: 1=1, SAVED ON 01/08/99 AT 12:05, XREFS: 7041SE01.DWG

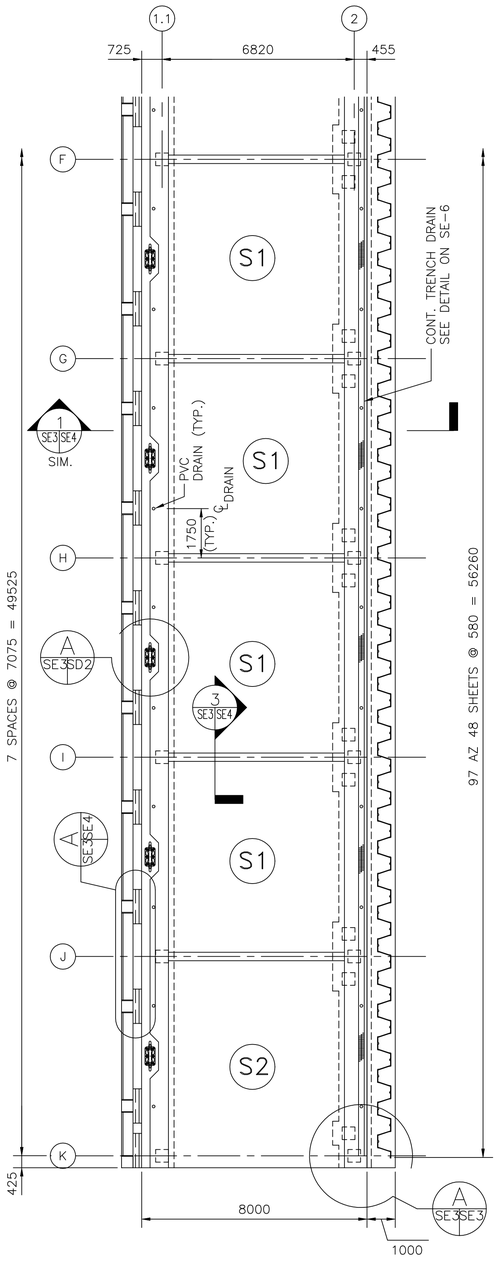


PARTIAL PLAN – RELIEVING PLATFORM (BENTS F THROUGH K)

1:100

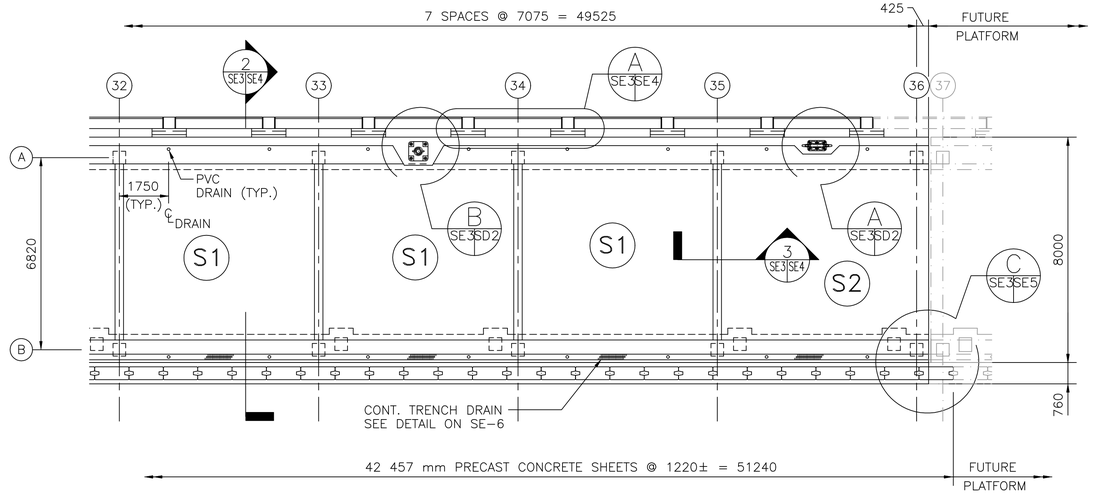


PARTIAL PLAN – RELIEVING PLATFORM (BENTS 32 THROUGH 36)

1:100

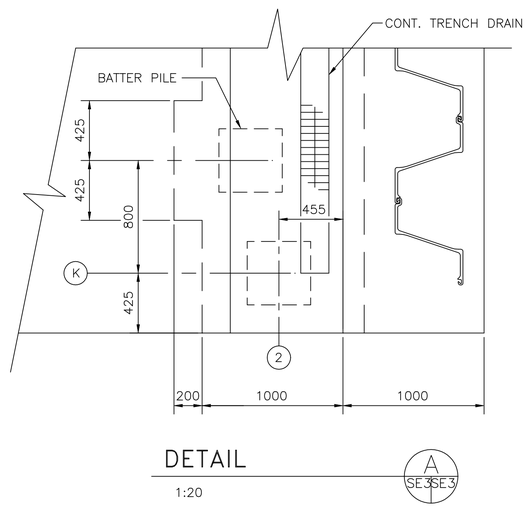


DETAIL

1:20

A
SE3SE3

NOTES:

1. PRECAST SLAB PANELS ARE DENOTED (SX) ON PLAN. SEE SHEET SE-1 FOR PANEL DIMENSIONS.

GRAPHIC SCALE

1:20 0 500 1000 2000mm

1:100 01000 5000 10000mm

REVISIONS

| SYM. | DESCRIPTION | DATE | APPROVED |
|---|---|---|---|

DESIGNED & ENGINEERED BY: LANTDIV NAVAL FACILITIES ENGINEERING COMMAND

SEAL

APPROVED

ACTIVITY – SATISFACTORY TO

DATE

APPROVED
FOR EFD FOR COMMANDER NAVFAC
1/25/99

DATE

| A/E | EFD |
|---|---|
| DESIGN | RCS |
| DRAWN | RCS |
| REVIEW | HDK |
| QC | |
| CHIEF ARCH./ ENGR. | |
| PROJECT MANAGER | DWB |
| FIRE PROTECTION | DWB |
| BRANCH MANAGER | |
| DESIGN DIRECTOR | |

DEPARTMENT OF THE NAVY
NAVAL STATION
ATLANTIC DIVISION
NAVAL FACILITIES ENGINEERING COMMAND
NORFOLK, VIRGINIA

NAVAL STATION NORFOLK, VIRGINIA

PIER 2 REPLACEMENT

RELIEVING PLATFORM – PARTIAL PLAN

| | |
|---|---|
| CODE ID. NO. 80091 | SIZE D |
| SCALE: AS NOTED | |
| EFD NO. 494040 | |
| STA. PROJ. NO. P-355 | |
| SPEC. NO. 05-97-7041 | |
| CONSTR. CONTR. NO. N62470-97-B-7041 | |
| NAVFAC DRAWING NO. 4394040 | |
| SHEET 150 OF 240 | |

SE-3

DRAWFORM REVISION 27 JULY 98

FILENAME: 7041SE03.DWG, PLOT SCALE: 1=1, SAVED ON 01/08/99 AT 12:09, XREFS: 7041SE01.DWG

8 7 6 5 4 3 2 1

D C B A

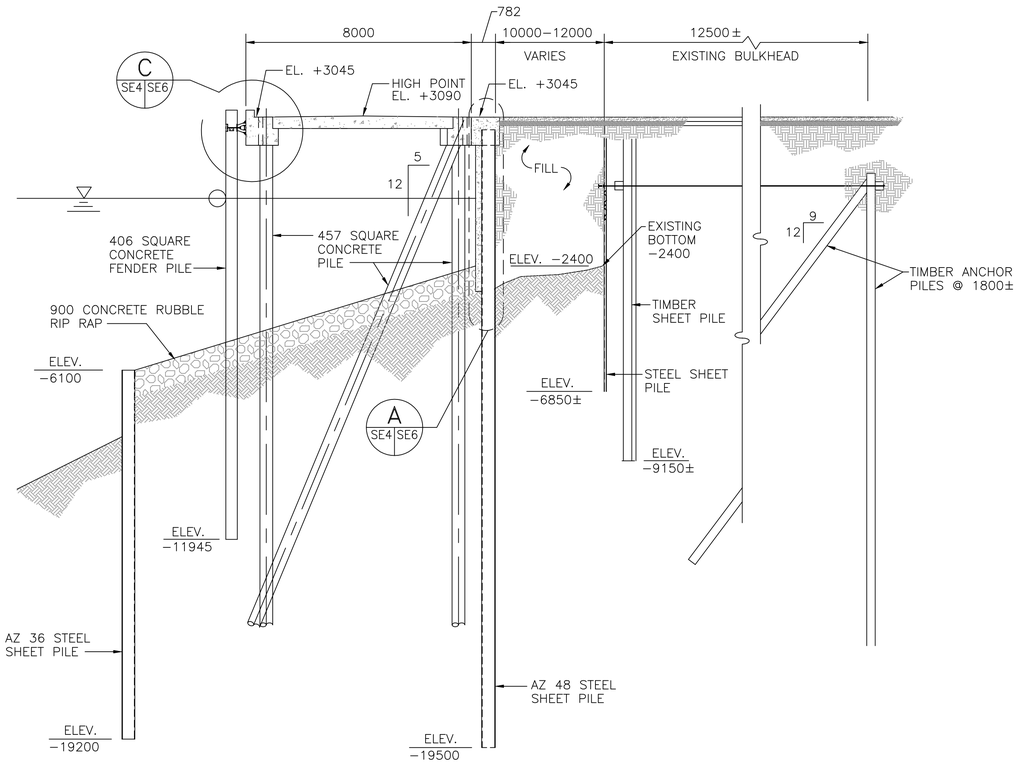


SECTION
1:100
1
SE2, S21
SE1 SE4

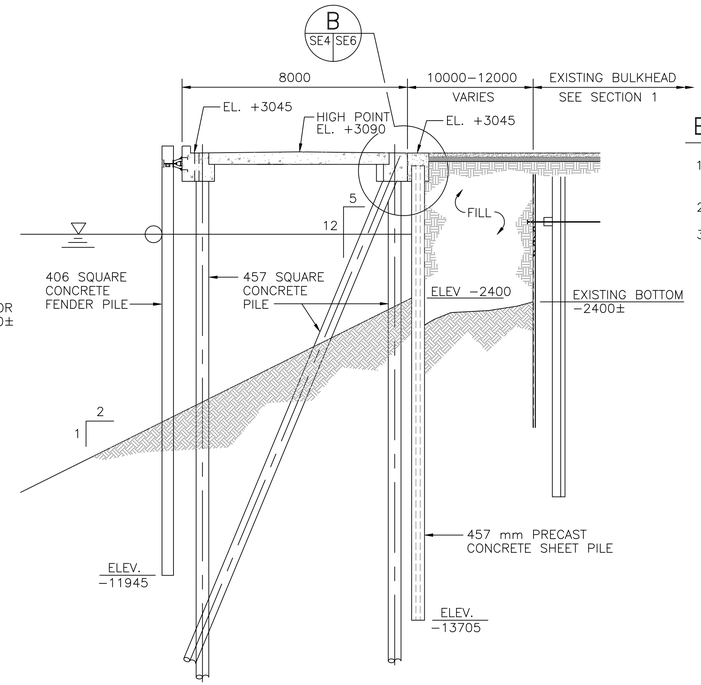


SECTION
1:100
2
SE3, S21
SE2 SE4

## BULKHEAD CONSTRUCTION NOTES

1. CUT OFF EXISTING TIMBER AND STEEL SHEET PILE AT ELEVATION +2500 TO ACCOMODATE NEW PAVEMENT.
2. DRIVE SUBMERGED AZ 36 SHEET PILE PRIOR TO DREDGING.
3. CONSTRUCT RELIEVING PLATFORM AND AZ 48/CONCRETE BULKHEAD PRIOR TO BACKFILLING BETWEEN NEW AND EXISTING BULKHEADS. NEW BULKHEAD RELIES ON RELIEVING PLATFORM FOR LATERAL STABILITY.

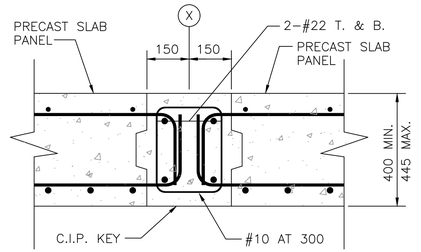


SECTION
1:10
3
SE2, SE3
SE1 SE4

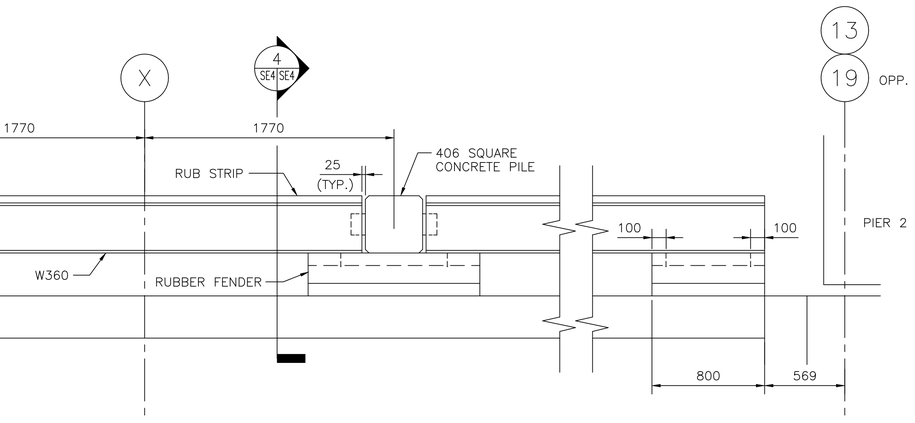


DETAIL
1:20
A
SE2, SE3
SE1 SE4

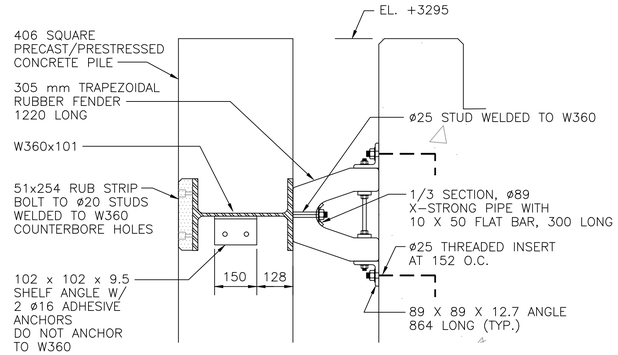


SECTION
1:10
4
SE4 SE4

## GRAPHIC SCALES

1:10 — 0 100 500 1000mm
1:20 — 0 500 1000 2000mm
1:100 — 01000 5000 10000mm

REVISIONS

| SYM. | DESCRIPTION | DATE | APPROVED |
|---|---|---|---|

DESIGNED & ENGINEERED BY: LANTDIV NAVAL FACILITIES ENGINEERING COMMAND

SEAL

APPROVED
ACTIVITY – SATISFACTORY TO
DATE
APPROVED
FOR EFD FOR COMMANDER NAVFAC
1/25/99
DATE

| A/E | EFD |
|---|---|
| DESIGN | RCS |
| DRAWN | RCS |
| REVIEW | HDK |
| QC | |
| CHIEF ARCH./ ENGR. | |
| PROJECT MANAGER | DWR |
| FIRE PROTECTION | DWR |
| BRANCH MANAGER | |
| DESIGN DIRECTOR | |

DEPARTMENT OF THE NAVY
NAVAL STATION
NAVAL FACILITIES ENGINEERING COMMAND
ATLANTIC DIVISION
NAVAL STATION NORFOLK, VIRGINIA

# PIER 2 REPLACEMENT

RELIEVING PLATFORM – SECTIONS

CODE ID. NO. 80091 | SIZE D
SCALE: AS NOTED
EFD NO. 494041
STA. PROJ. NO. P–355
SPEC. NO. 05–97–7041
CONSTR. CONTR. NO. N62470–97–B–7041
NAVFAC DRAWING NO. 4394041
SHEET 151 OF 240

SE–4

DRAWFORM REVISION 27 JULY 98

FILENAME: 7041SE04.DWG, PLOT SCALE: 1=1, SAVED ON 12/22/98 AT 15:09, XREFS: NONE

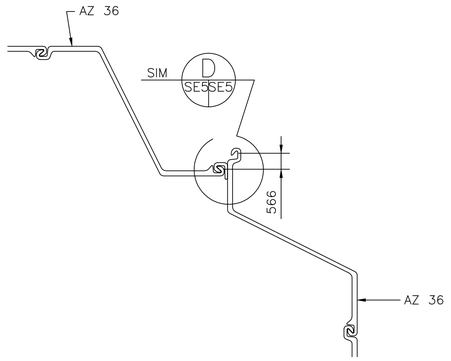


DETAIL
1 : 10
A
SE2SE5

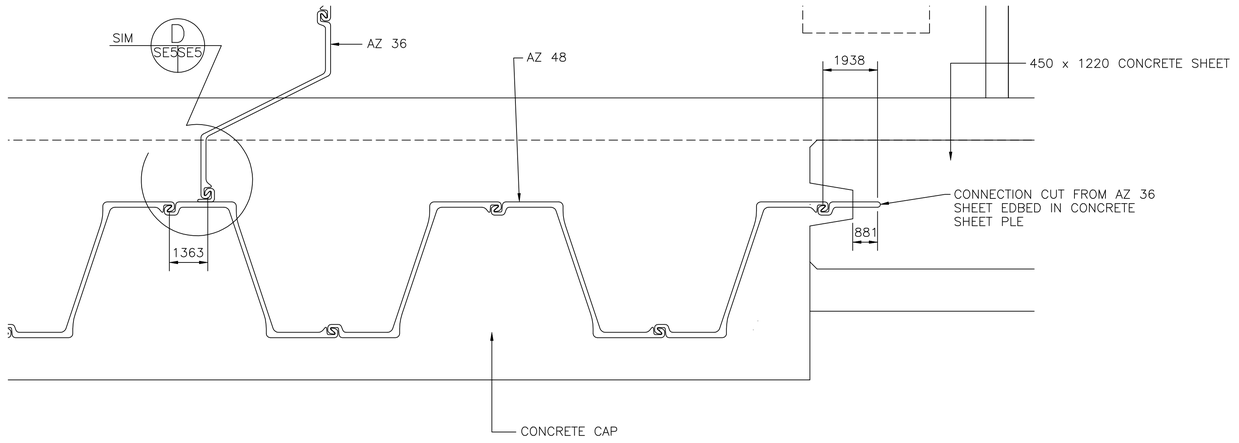


DETAIL
1 : 10
B
SE2SE5

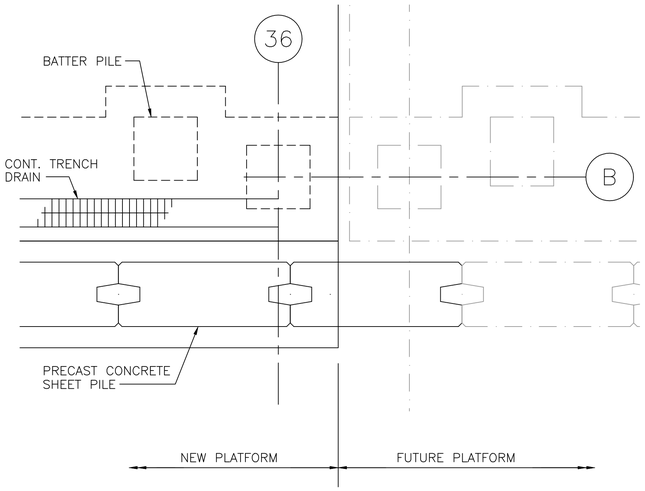


DETAIL
1 : 20
C
SE3SE5

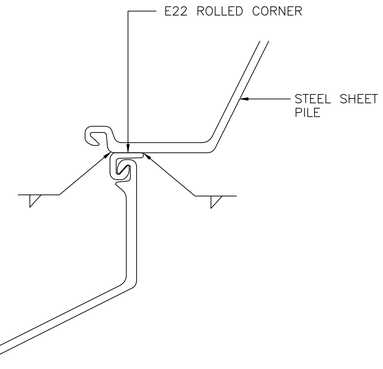


DETAIL
1 : 5
D
SE1SE5
SE5

## CONCRETE SHEET PILE NOTES:

1. CONCRETE SHALL HAVE A MINIMUM COMPRESSIVE STRENGTH OF 42 MPa AT 28 DAYS.
2. SECTIONS SHALL HAVE THE FOLLOWING PROPERTY VALUES PER METER:

| | |
|---|---|
| T = 305 mm | T = 457 mm |
| W = 914 mm | W = 1220 mm |
| A = 3048 cm2 | A = 4572 cm2 |
| I = 235974 cm4 | I = 796411 cm4 |
| S = 15484 cm3 | S = 34839 cm3 |
| ALL. MOM. = 128.1 kN–m | ALL. MOM. = 288.2 kN–m |

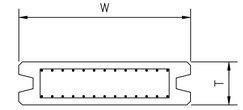


SECTION A–A

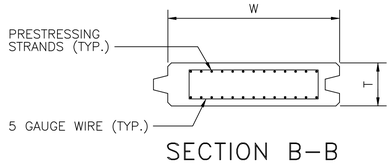


SECTION B–B

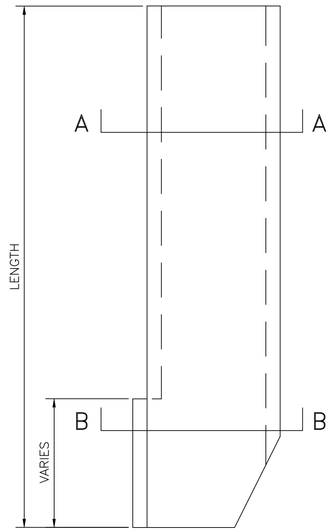


ELEVATION

## PRECAST CONCRETE SHEET PILE

NOT TO SCALE

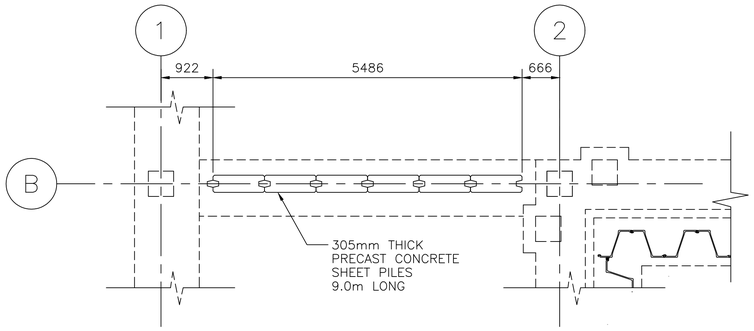


BREAKWATER LAYOUT PLAN
1 : 50
E
SE1SE5

## GRAPHIC SCALES

1:5 — 0 100 300 500mm
1:10 — 0 100 500 1000mm
1:20 — 0 500 1000 2000mm
1:50 — 0 1000 3000 5000mm

REVISIONS

| SYM | DESCRIPTION | DATE | APPROVED |
|---|---|---|---|

DESIGNED & ENGINEERED BY: LANTDIV NAVAL FACILITIES ENGINEERING COMMAND

SEAL

APPROVED
ACTIVITY – SATISFACTORY TO
DATE
APPROVED
FOR EFD FOR COMMANDER NAVFAC
1/25/99
DATE

| A/E | EFD |
|---|---|
| DESIGN | RCS |
| DRAWN | RCS |
| REVIEW | HDK |
| QC | |
| CHIEF ARCH./ ENGR. | |
| PROJECT MANAGER | DWR |
| FIRE PROTECTION | DWR |
| BRANCH MANAGER | |
| DESIGN DIRECTOR | |

DEPARTMENT OF THE NAVY
NAVAL STATION ATLANTIC DIVISION
NAVAL FACILITIES ENGINEERING COMMAND
NORFOLK, VIRGINIA

# PIER 2 REPLACEMENT

RELIEVING PLATFORM – DETAILS

| | |
|---|---|
| CODE ID. NO. 80091 | SIZE D |
| SCALE: AS NOTED | |
| EFD NO. 494042 | |
| STA. PROJ. NO. P–355 | |
| SPEC. NO. 05–97–7041 | |
| CONSTR. CONTR. NO. N62470–97–B–7041 | |
| NAVFAC DRAWING NO. 4394042 | |
| SHEET 152 OF 240 | |

SE–5

FILENAME: 7041SE05.DWG, PLOT SCALE: 1=1, SAVED ON 12/22/98 AT 15:11, XREFS: NONE

DRAWFORM REVISION 27 JULY 98

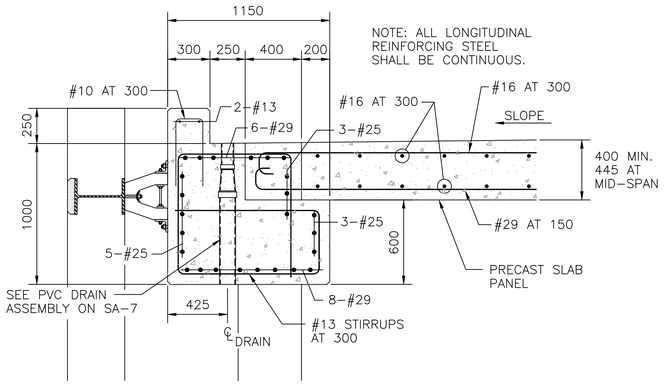


DETAIL C
1 : 20
SE4 | SE6

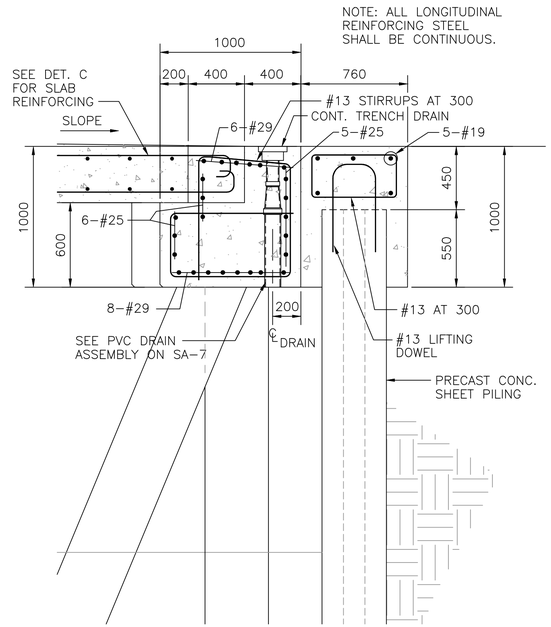


DETAIL B
1 : 20
SE4 | SE6

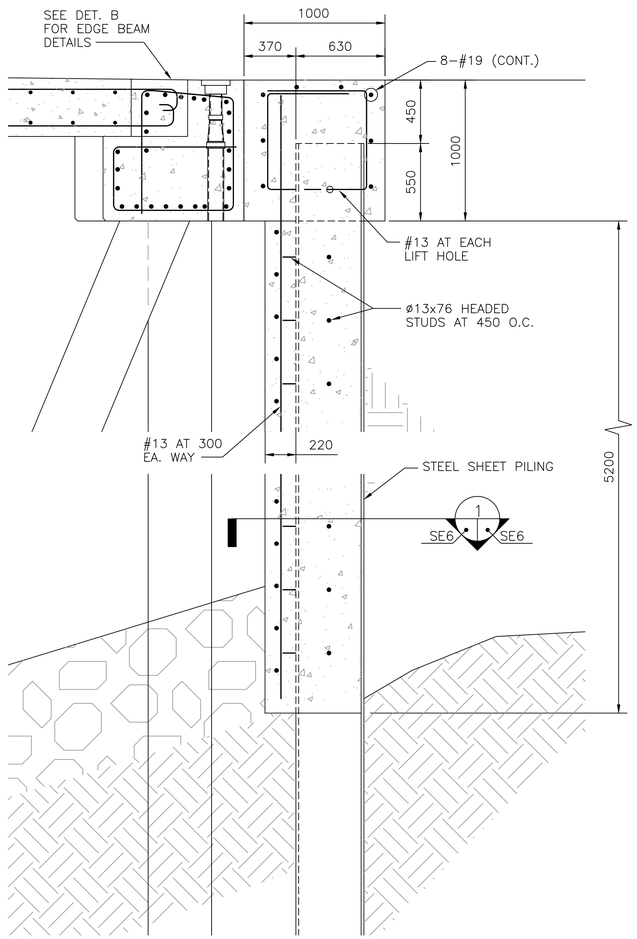


DETAIL A
1 : 20
SE8
SE4 | SE6

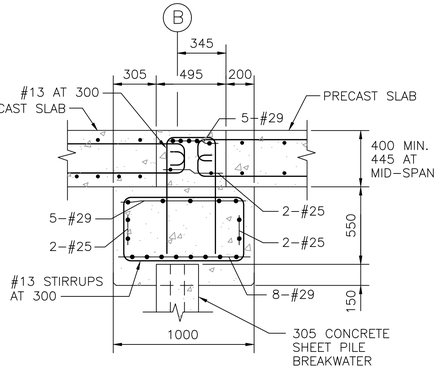


SECTION 2
1 : 20
SE1 | SE6

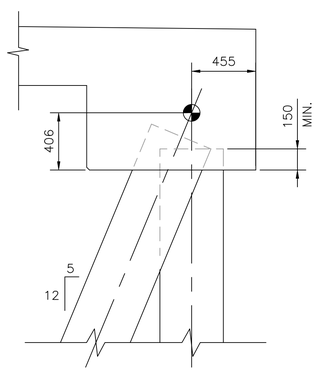


PILING DETAIL
1 : 20

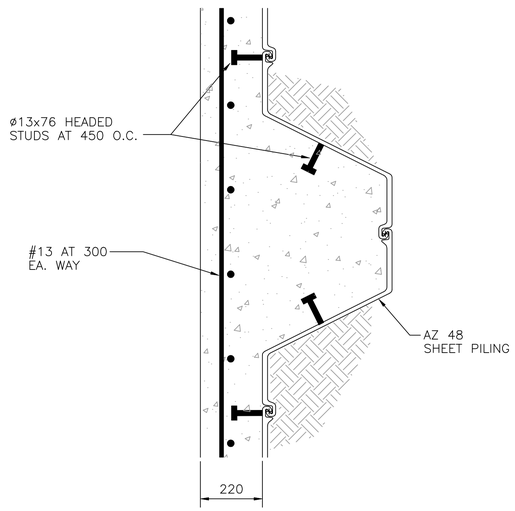


SECTION 1
1 : 10
SE6 | SE6

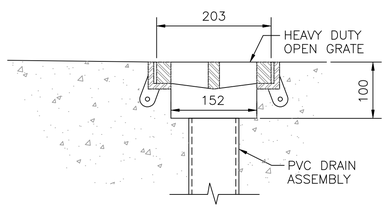


CONT. TRENCH DRAIN DETAIL
1 : 5

GRAPHIC SCALES

1:5 — 0 100 300 500mm

1:10 — 0 100 500 1000mm

1:20 — 0 500 1000 2000mm

| REVISIONS | | | |
|---|---|---|---|
| SYM. | DESCRIPTION | DATE | APPROVED |

DESIGNED & ENGINEERED BY: LANTDIV NAVAL FACILITIES ENGINEERING COMMAND

SEAL

APPROVED
ACTIVITY – SATISFACTORY TO
DATE
APPROVED
FOR EFD FOR COMMANDER NAVFAC
1/25/99
DATE

| A/E | EFD |
|---|---|
| DESIGN | RCS |
| DRAWN | RCS |
| REVIEW | HDK |
| QC | |
| CHIEF ARCH./ ENGR. | |
| PROJECT MANAGER | DWR |
| FIRE PROTECTION | DWR |
| BRANCH MANAGER | WESELER |
| DESIGN DIRECTOR | |

DEPARTMENT OF THE NAVY
NAVAL STATION
ATLANTIC DIVISION
NAVAL FACILITIES ENGINEERING COMMAND
NORFOLK, VIRGINIA

NAVAL STATION NORFOLK, VA

# PIER 2 REPLACEMENT

RELIEVING PLATFORM – DETAILS

| | |
|---|---|
| CODE ID. NO. 80091 | SIZE D |
| SCALE: AS NOTED | |
| EFD NO. 494043 | |
| STA. PROJ. NO. P-355 | |
| SPEC. NO. 05-97-7041 | |
| CONSTR. CONTR. NO. N62470-97-B-7041 | |
| NAVFAC DRAWING NO. 4394043 | |
| SHEET 153 OF 240 | |

SE-6

DRAWFORM REVISION 27 JULY 98

FILENAME: 7041SE06.DWG; PLOT SCALE: 1=1, SAVED ON 12/22/98 AT 15:13, XREFS: NONE

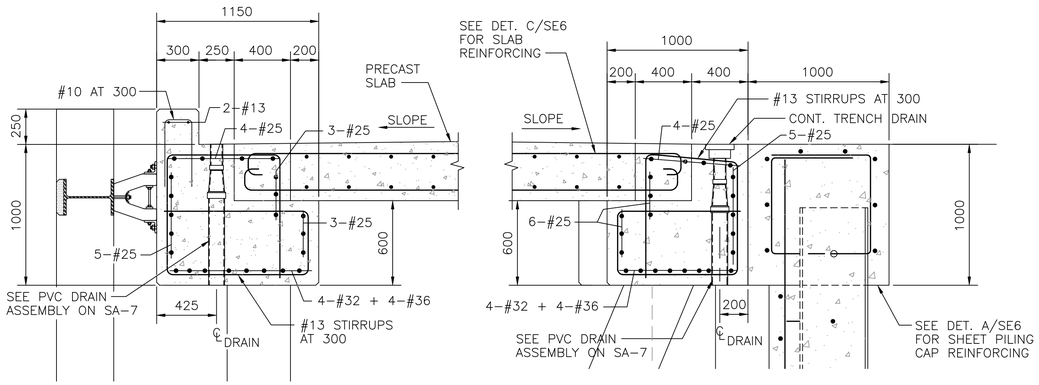


THIS SECTION APPLIES TO PLATFORM CONSTRUCTION BETWEEN BENTS 12 & 13 AND 19 & 20 ONLY. SEE SHEET SE4 FOR TYPICAL PLATFORM SECTIONS.

## SECTION 1/SE2 SE7

1 : 20

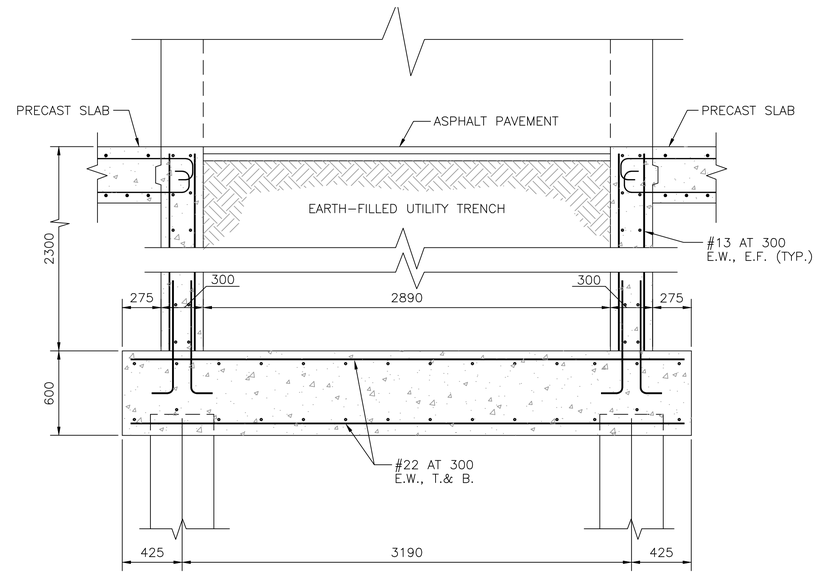


## SECTION 2/SE7 SE7

1 : 20

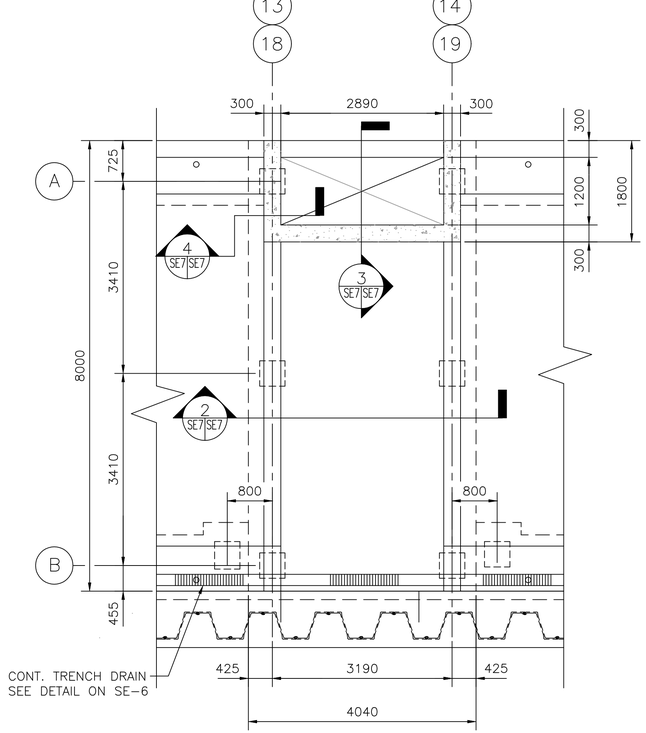


## DETAIL A/SE2 SE7

1 : 50

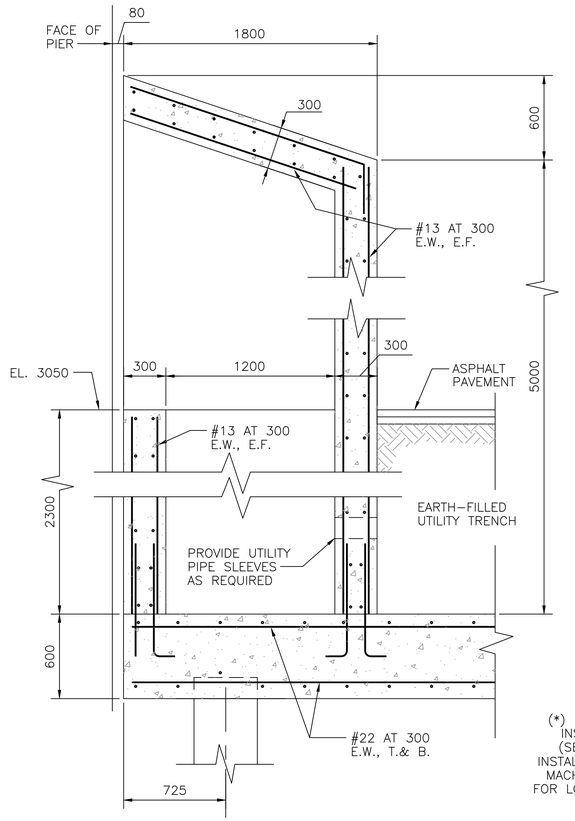


## SECTION 3/SE7 SE7

1 : 20

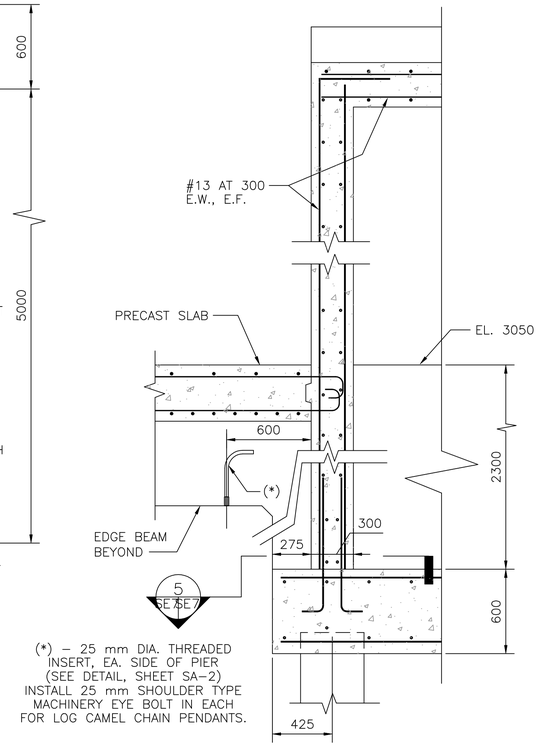


(*) – 25 mm DIA. THREADED INSERT, EA. SIDE OF PIER (SEE DETAIL, SHEET SA-2) INSTALL 25 mm SHOULDER TYPE MACHINERY EYE BOLT IN EACH FOR LOG CAMEL CHAIN PENDANTS.

## SECTION 4/SE7 SE7

1 : 20

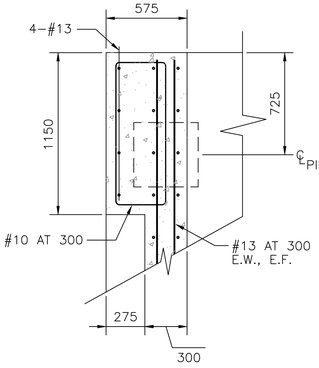


## SECTION 5/SE7 SE7

1 : 20

## GRAPHIC SCALES

1:20 — 0, 500, 1000, 2000mm

1:50 — 0, 1000, 3000, 5000mm

REVISIONS

| SYM. | DESCRIPTION | DATE | APPROVED |
|---|---|---|---|

DESIGNED & ENGINEERED BY: LANTDIV NAVAL FACILITIES ENGINEERING COMMAND

SEAL

APPROVED

ACTIVITY – SATISFACTORY TO

DATE

APPROVED
FOR EFD FOR COMMANDER NAVFAC
1/25/99

DATE

| A/E | EFD |
|---|---|
| DESIGN | RCS |
| DRAWN | RCS |
| REVIEW | HDK |
| QC | |
| CHIEF ARCH./ ENGR. | |
| PROJECT MANAGER | DWR |
| FIRE PROTECTION | DWR |
| BRANCH MANAGER | |
| DESIGN DIRECTOR | |

DEPARTMENT OF THE NAVY
NAVAL FACILITIES ENGINEERING COMMAND
NORFOLK, VIRGINIA
NAVAL STATION ATLANTIC DIVISION
NORFOLK, VA

# PIER 2 REPLACEMENT

RELIEVING PLATFORM – SECTIONS

CODE ID. NO. 80091 | SIZE D

SCALE: AS NOTED

EFD NO. 494044

STA. PROJ. NO. P-355

SPEC. NO. 05-97-7041

CONSTR. CONTR. NO. N62470-97-B-7041

NAVFAC DRAWING NO. 4394044

SHEET 154 OF 240

SE-7

DRAWFORM REVISION 27 JULY 98

FILENAME: 7041SE07.DWG, PLOT SCALE: 1=1, SAVED ON 12/22/98 AT 15:14, XREFS: NONE

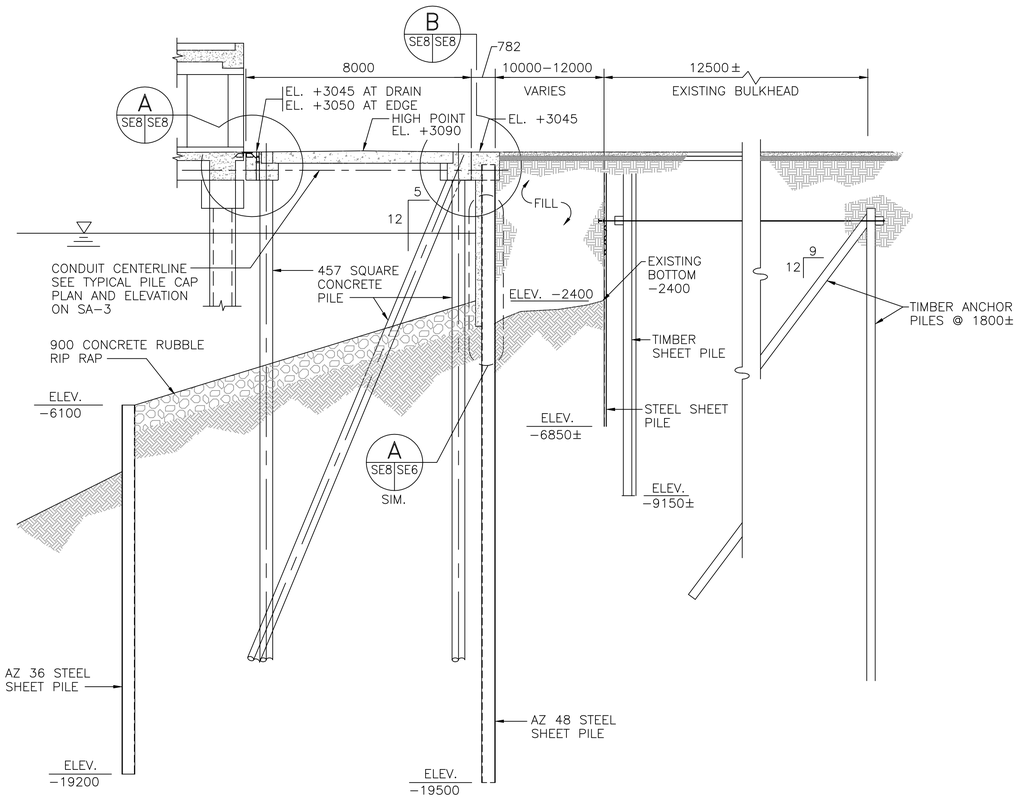


## SECTION
1:100 — 1 SE2 SE8

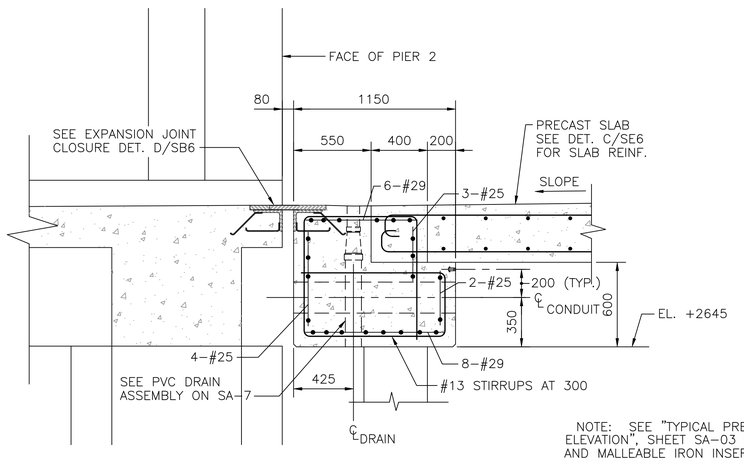


## DETAIL
1:20 — A SE8 SE8

NOTE: SEE "TYPICAL PRECAST PILE CAP ELEVATION", SHEET SA–03 FOR PVC SLEEVE AND MALLEABLE IRON INSERT PATTERNS FOR ELECTRICAL AND COMMUNICATIONS CONDUITS.

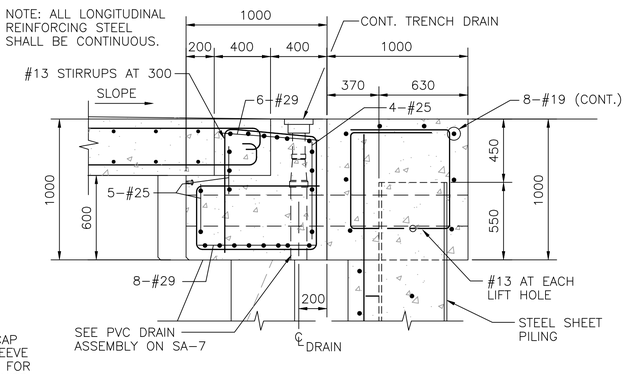


## DETAIL
1:20 — B SE8 SE8

## GRAPHIC SCALES

1:20 — 0 500 1000 2000mm

1:100 — 01000 5000 10000mm

REVISIONS

| SYM. | DESCRIPTION | DATE | APPROVED |
|---|---|---|---|

DESIGNED & ENGINEERED BY: LANTDIV NAVAL FACILITIES ENGINEERING COMMAND

SEAL

APPROVED

ACTIVITY – SATISFACTORY TO

DATE

APPROVED
FOR EFD FOR COMMANDER NAVFAC
1/25/99

DATE

| A/E | EFD |
|---|---|
| DESIGN | RCS |
| DRAWN | RCS |
| REVIEW | HDK |
| QC | |
| CHIEF ARCH./ ENGR. | |
| PROJECT MANAGER | DWB |
| FIRE PROTECTION | DWR |
| BRANCH MANAGER | |
| DESIGN DIRECTOR | |

DEPARTMENT OF THE NAVY
NAVAL STATION
ATLANTIC DIVISION
NAVAL FACILITIES ENGINEERING COMMAND
NORFOLK, VIRGINIA

NAVAL STATION NORFOLK, VIRGINIA

# PIER 2 REPLACEMENT

RELIEVING PLATFORM – SECTIONS

| | |
|---|---|
| CODE ID. NO. 80091 | SIZE D |
| SCALE: | AS NOTED |
| EFD NO. | 494045 |
| STA. PROJ. NO. | P–355 |
| SPEC. NO. | 05–97–7041 |
| CONSTR. CONTR. NO. | N62470–97–B–7041 |
| NAVFAC DRAWING NO. | 4394045 |
| SHEET | 155 OF 240 |

SE–8

DRAWFORM REVISION 27 JULY 98

FILENAME: 7041SE08.DWG, PLOT SCALE: 1=1, SAVED ON 12/22/98 AT 15:16, XREFS: NONE

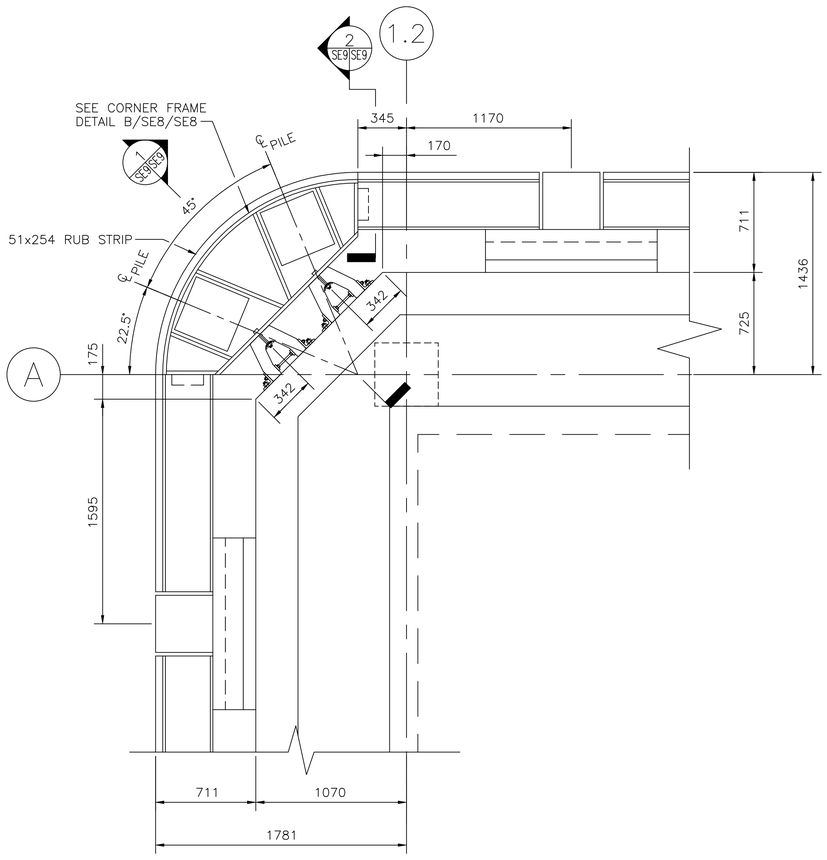


DETAIL

1 : 20

A
SE1 SE9

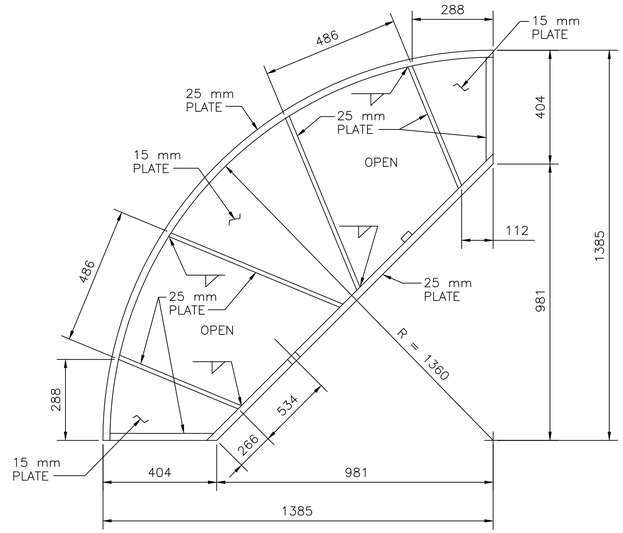


PLAN

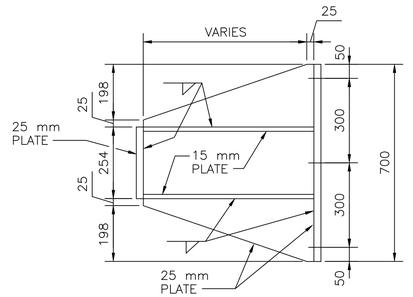


SECTION

## CORNER FRAME DETAIL

1 : 10

B
SE9 SE9

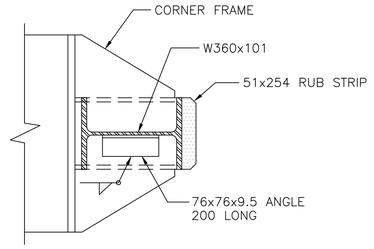


SECTION

1 : 10

2
SE9 SE9

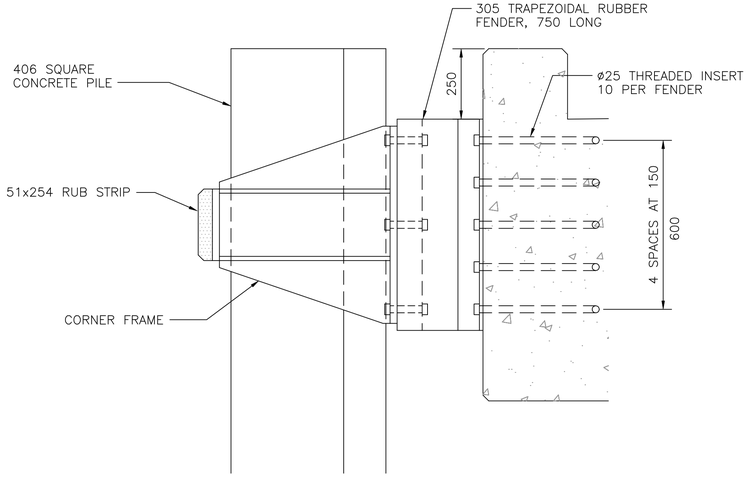


SECTION

1 : 10

1
SE9 SE9

## GRAPHIC SCALES

1:10 0 100 500 1000mm

1:20 0 500 1000 2000mm

REVISIONS

| SYM. | DESCRIPTION | DATE | APPROVED |
|---|---|---|---|

DESIGNED & ENGINEERED BY: LANTDIV NAVAL FACILITIES ENGINEERING COMMAND

SEAL

APPROVED

ACTIVITY – SATISFACTORY TO

DATE

APPROVED

FOR EFD FOR COMMANDER NAVFAC

1/25/99

DATE

| A/E | EFD |
|---|---|
| DESIGN | RCS |
| DRAWN | RCS |
| REVIEW | HDK |
| QC | |
| CHIEF ARCH./ ENGR. | |
| PROJECT MANAGER | DWB |
| FIRE PROTECTION | DWR |
| BRANCH MANAGER | |
| DESIGN DIRECTOR | |

DEPARTMENT OF THE NAVY
NAVAL FACILITIES ENGINEERING COMMAND
ATLANTIC DIVISION
NAVAL STATION
NORFOLK, VIRGINIA
NAVAL STATION
NORFOLK, VA

# PIER 2 REPLACEMENT

RELIEVING PLATFORM – CORNER DETAILS

CODE ID. NO. 80091 | SIZE D

SCALE: AS NOTED

EFD NO. 494046

STA. PROJ. NO. P-355

SPEC. NO. 05-97-7041

CONSTR. CONTR. NO. N62470-97-B-7041

NAVFAC DRAWING NO. 4394046

SHEET 156 OF 240

SE-9

DRAWFORM REVISION 27 JULY 98

FILENAME: 7041SE09.DWG, PLOT SCALE: 1=1, SAVED ON 12/22/98 AT 15:18, XREFS: NONE

8 7 6 5 4 3 2 1

D C B A