PIER 2 REPLACEMENT

NAVAL STATION NORFOLK, VA

DRAWING INDEX

PAGE NO.	SHEET NO.	EFD DWG NO	NAVFAC DWG NO	SHEET TITLE
1	T-1	493891	4393891	TITLE SHEET – DRAWING INDEX
2	T-2	493892	4393892	VICINITY AND LOCATION MAPS – DRAWING INDEX (CONT.)
3	C-1	493893	4393893	NOTES, ABBREVIATIONS AND LEGEND
4	C-2	493894	4393894	NEW PIER 2 LAYOUT PLAN
5	C-3	493895	4393895	KEY PLANS (CIVIL SHEETS)
6	C-4	493896	4393896	DEMOLITION PLAN (1 OF 5)
7	C-5	493897	4393897	DEMOLITION PLAN (2 OF 5)
8	C-6	493898	4393898	DEMOLITION PLAN (3 OF 5)
9	C-7	493899	4393899	DEMOLITION PLAN (4 OF 5)
10	C-8	493900	4393900	DEMOLITION PLAN (5 OF 5)
11	C-9	493901	4393901	PIER POINT PARK DEMOLITION
12	C-10	493902	4393902	SITE DEMOLITION PLAN (1 OF 2)
13	C-11	493903	4393903	SITE DEMOLITION PLAN (2 OF 2)
14	C-12	493904	4393904	NEW SITE LAYOUT PLAN (1 OF 2)
15	C-13	493905	4393905	NEW SITE LAYOUT PLAN (2 OF 2)
16	C-14	493906	4393906	NEW SITE GRADING PLAN (1 OF 2)
17	C-15	493907	4393907	NEW SITE GRADING PLAN (2 OF 2)
18	C-16	493908	4393908	NEW SITE UTILITY PLAN (1 OF 2)
19	C-17	493909	4393909	NEW SITE UTILITY PLAN (2 OF 2)
20	C-18	493910	4393910	EXPAND SUBSTATION – DEMOLITION PLAN
21	C-19	493911	4393911	EXPAND SUBSTATION – NEW WORK PLAN
22	C-20	493912	4393912	Z-86 DEMOLITION SITE PLAN
23	C-21	493913	4393913	EXISTING UTILITY STRUCTURE DATA
24	C-22	493914	4393914	UTILITY DETAILS
25	C-23	493915	4393915	PAVEMENT DETAILS
26	C-24	493916	4393916	MISCELLANEOUS DETAILS
27	C-25	493917	4393917	OILY WASTE/WASTE OIL (OWWO) PROFILE
28	C-26	493918	4393918	SANITARY (SAN.) AND POTABLE WATER (PW) PROFILES
29	C-27	493919	4393919	DREDGING PLAN
30	C-28	493920	4393920	DREDGING PLAN
31	C-29	493921	4393921	DREDGING PLAN
32	C-30	493922	4393922	DREDGING PLAN
33	C-31	493923	4393923	DREDGING PLAN
34	C-32	493924	4393924	DREDGING PLAN
35	C-33	493925	4393925	DREDGING DETAILS
36	CS-1	493926	4393926	SIDESCAN SONAR AND MAGNETOMETER SURVEY (1 OF 6)
37	CS-2	493927	4393927	SIDESCAN SONAR AND MAGNETOMETER SURVEY (2 OF 6)
38	CS-3	493928	4393928	SIDESCAN SONAR AND MAGNETOMETER SURVEY (3 OF 6)
39	CS-4	493929	4393929	SIDESCAN SONAR AND MAGNETOMETER SURVEY (4 OF 6)
40	CS-5	493930	4393930	SIDESCAN SONAR AND MAGNETOMETER SURVEY (5 OF 6)
41	CS-6	493931	4393931	SIDESCAN SONAR AND MAGNETOMETER SURVEY (6 OF 6)
42	DS-1	493932	4393932	DEMOLITION PHOTOGRAPH ORIENTATION PLAN
43	DS-2	493933	4393933	DEMOLITION PHOTOGRAPHS 1 – 6
44	DS-3	493934	4393934	DEMOLITION PHOTOGRAPHS 7 – 12
45	DS-4	493935	4393935	DEMOLITION PHOTOGRAPHS 13 – 18
46	DS-5	493936	4393936	BLDG. Z-86 FNDTN. PLAN – DEMO. PHOTOGRAPHS 19 – 21
47	DS-6	493937	4393937	BLDG. Z-86 FLOOR PLANS AND SECTION
48	DS-7	493938	4393938	BLDG. Z-357 FOUNDATION PLAN
49	DS-8	493939	4393939	BLDG. Z-357 FLOOR AND ROOF PLANS
50	DS-9	493940	4393940	FERRY LANDING DEMOLITION PLAN
51	DS-10	493941	4393941	BREAKWATER DEMOLITION PLAN AND SECTION
52	DM-1	493942	4393942	STEAM LINE DEMOLITION SITE PLAN

PAGE NO.	SHEET NO.	EFD DWG NO	NAVFAC DWG NO	SHEET TITLE
53	ER-1	493943	4393943	ASBESTOS NOTES AND DETAIL
54	ER-2	493944	4393944	ASBESTOS ABATEMENT BUILDING Z-86
55	ER-3	493945	4393945	ASBESTOS ABATEMENT BUILDING Z-86
56	ER-4	493946	4393946	ASBESTOS ABATEMENT BUILDING Z-86
57	ER-5	493947	4393947	ASBESTOS REMOVAL BUILDING Z-86
58	ER-6	493948	4393948	ASBESTOS ABATEMENT BUILDING Z-357
59	ER-7	493949	4393949	ASBESTOS ABATEMENT BUILDING Z-357
60	ER-8	493950	4393950	ASBESTOS ABATEMENT BUILDING Z-357
61	ER-9	493951	4393951	PCB LIGHT BALLAST REMOVAL BLDG. Z-86
62	ER-10	493952	4393952	PCB LIGHT BALLAST REMOVAL BLDG. Z-86
63	ER-11	493953	4393953	PCB LIGHT BALLAST REMOVAL BLDG. Z-357
64	ER-12	493954	4393954	PCB LIGHT BALLAST REMOVAL BLDG. Z-357
65	ER-13	493955	4393955	RCRA METALS CONTAINING PAINT REMOVAL BLDG. Z-86
66	ER-14	493956	4393956	RCRA METALS CONTAINING PAINT REMOVAL BLDG. Z-86
67	ER-15	493957	4393957	RCRA METALS CONTAINING PAINT REMOVAL BLDG. Z-357
68	ER-16	493958	4393958	RCRA METALS CONTAINING PAINT REMOVAL BLDG. Z-357
69	B-1	493959	4393959	BORINGS 1 AND 2
70	B-2	493960	4393960	BORINGS 3 AND 4
71	B-3	493961	4393961	BORINGS 5 AND 6
72	B-4	493962	4393962	BORINGS 7 AND 8
73	B-5	493963	4393963	BORINGS 9 AND 10
74	B-6	493964	4393964	BORINGS 11 AND 12
75	B-7	493965	4393965	BORINGS 13 AND 14
76	B-8	493966	4393966	BORINGS 15, 17, 17 AND 18
77	B-9	493967	4393967	BORINGS 19, 20, 21 AND 22
78	B-10	493968	4393968	BORINGS 23, 24 AND 25
79	B-11	493969	4393969	SOIL BORINGS NOTES
80	S-1	493970	4393970	GENERAL NOTES / PLAN LEGEND
81	S-2	493971	4393971	PARTIAL PLAN – PIER 2 (INSHORE END – BENT 20)
82	S-3	493972	4393972	PARTIAL PLAN – PIER 2 (BENTS 21 – 40)
83	S-4	493973	4393973	PARTIAL PLAN – PIER 2 (BENTS 41 – 60)
84	S-5	493974	4393974	PARTIAL PLAN – PIER 2 (BENT 61 – OFFSHORE END)
85	S-6	493975	4393975	TYPICAL LATERAL PIER SECTION
86	S-7	493976	4393976	LATERAL PIER SECTION AT BOLLARD PLATFORMS
87	S-8	493977	4393977	LATERAL PIER SECTION THROUGH INSHORE END
88	S-9	493978	4393978	DETAIL – LOWER DECK EDGE
89	S-10	493979	4393979	DETAIL – LOWER DECK EDGE AT SHIP POWER STATION
90	S-11	493980	4393980	DETAIL – LOWER DECK EDGE AT SHIP POWER STATION
91	S-12	493981	4393981	DETAIL – LOWER DECK EDGE AT INSHORE END
92	S-13	493982	4393982	LONGITUDINAL SECTION AT VEHICLE RAMP
93	S-14	493983	4393983	LONGITUDINAL SECTION AT LOWER DECK ENTRANCE
94	S-15	493984	4393984	DETAILS – OFFSHORE END AND EXPANSION JOINTS
95	S-16	493985	4393985	OFFSHORE STAIRWELL AND SPLICE BOX ENCLOSURE DETAILS
96	S-17	493986	4393986	DETAIL – ELEVATED BOLLARD PLATFORMS
97	SA-1	493987	4393987	PRECAST, PRESTRESSED CONCRETE PILE DETAILS
98	SA-2	493988	4393988	PRECAST CONCRETE EDGE CAP DETAILS
99	SA-3	493989	4393989	PRECAST CONCRETE PILE CAP LAYOUT PLAN
100	SA-4	493990	4393990	PRECAST CONCRETE PILE CAP DETAILS AND SECTIONS
101	SA-5	493991	4393991	PRECAST CONCRETE PILE CAP HAUNCH DETAILS
102	SA-6	493992	4393992	PILE CAP SHEAR KEY DETAILS
103	SA-7	493993	4393993	PRECAST CONCRETE BEAM DETAILS
104	SA-8	493994	4393994	PRECAST CONCRETE BEAM DETAILS

PAGE NO.	SHEET NO.	EFD DWG NO	NAVFAC DWG NO	SHEET TITLE
105	SA-9	493995	4393995	PRECAST CONCRETE BEAM AND EDGE PANEL DETAILS
106	SA-10	493996	4393996	LOWER DECK PRECAST CONCRETE SLAB LAYOUT PLAN
107	SA-11	493997	4393997	PRECAST CONCRETE SLAB DETAILS
108	SA-12	493998	4393998	PRECAST CONCRETE SLAB OPENING DETAILS
109	SA-13	493999	4393999	PRECAST CONCRETE SLAB OPENING – LIFT STATION DETAILS
110	SB-1	494000	4394000	EDGE CAP AND PILE CAP INSTALLATION DETAILS
111	SB-2	494001	4394001	EDGE BEAM INSTALLATION DETAILS
112	SB-3	494002	4394002	PIER END CLOSURE DETAILS
113	SB-4	494003	4394003	LOWER DECK CLOSURE DETAILS
114	SB-5	494004	4394004	LOWER DECK SLAB INSTALLATION DETAILS
115	SB-6	494005	4394005	BATTER PILE CAP AND SHEAR KEY DETAILS
116	SB-7	494006	4394006	LOWER DECK UTILITY CURB DETAILS
117	SB-8	494007	4394007	PIER-END CURB-MISC. LOWER DECK CONCRETE DETAILS
118	SB-9	494008	4394008	ELECTRICAL EQUIPMENT SUPPORT DETAILS
119	SB-10	494009	4394009	LIFT STATION INSTALLATION DETAILS
120	SB-11	494010	4394010	EDGE PANEL INSTALLATION – PIPE HANGER DETAILS
121	SC-1	494011	4394011	LOWER DECK PLANS
122	SC-2	494012	4394012	UPPER DECK PLANS
123	SC-3	494013	4394013	COLUMNS
124	SC-4	494014	4394014	COLUMNS
125	SC-5	494015	4394015	LOWER DECK ENCLOSURES
126	SC-6	494016	4394016	ENCLOSURE ELEVATIONS AND DETAILS
127	SC-7	494017	4394017	BOLLARD PLATFORMS
128	SC-8	494018	4394018	UPPER DECK BEAMS
129	SC-9	494019	4394019	UPPER DECK BEAMS
130	SC-10	494020	4394020	SECTIONS
131	SC-11	494021	4394021	SECTIONS
132	SC-12	494022	4394022	SECTIONS AND PRECAST SLAB DETAILS
133	SC-13	494023	4394023	TYPICAL DETAILS
134	SC-14	494024	4394024	DETAILS
135	SD-1	494025	4394025	UPPER DECK BOLLARD AND BOLLARD PAD DETAILS
136	SD-2	494026	4394026	LOWER DECK / RELIEVING PLATFORM FITTING DETAILS
137	SD-3	494027	4394027	RAILING DETAILS
138	SD-4	494028	4394028	CORNER, END, AND RAIL FENDER MOUNTING DETAILS
139	SD-5	494029	4394029	CORNER AND END FENDER FABRICATION DETAILS
140	SD-6	494030	4394030	RAIL FENDER FABRICATION DETAILS
141	SD-7	494031	4394031	FENDER SYSTEM DETAILS
142	SD-8	494032	4394032	LADDER AND FOAM-FILLED FENDER DETAILS
143	SD-9	494033	4394033	PIPE SUPPORT DETAILS
144	SD-10	494034	4394034	PIPE SUPPORT DETAILS
145	SD-11	494035	4394035	VEHICLE RAMP GATE DETAILS
146	SD-12	494036	4394036	CHAIN LINK FENCE PLANS AND DETAILS
147	SD-13	494037	4394037	SUBSTATION DOLLY ASSEMBLY DETAILS
148	SE-1	494038	4394038	RELIEVING PLATFORM – PARTIAL PLAN
149	SE-2	494039	4394039	RELIEVING PLATFORM – PARTIAL PLAN
150	SE-3	494040	4394040	TYPICAL RELIEVING PLATFORM SECTIONS
151	SE-4	494041	4394041	RELIEVING PLATFORM DETAILS
152	SE-5	494042	4394042	RELIEVING PLATFORM PRECAST SLAB DETAILS
153	SE-6	494043	4394043	RELIEVING PLATFORM REINFORCING DETAILS
154	SE-7	494044	4394044	RELIEVING PLATFORM UTILITY TRENCH DETAILS
155	SE-8	494045	4394045	RELIEVING PLATFORM FENDER SYSTEM DETAILS
156	SE-9	494046	4394046	RELIEVING PLATFORM FENDER SYSTEM DETAILS

REVISIONS

SYM.	DESCRIPTION	DATE	APPROVED
	TITLES FOR SE-3 THROUGH SE-9 REVISED	3/27/99	

DESIGNED & ENGINEERED BY: LANTDIV NAVAL FACILITIES ENGINEERING COMMAND

SEAL

APPROVED NAVSTA LTR SER N52/0056
ACTIVITY – SATISFACTORY TO
DATE DTD 14 JAN 99

APPROVED
FOR EFD FOR COMMANDER, NAVFAC
DATE 4/08/99

A/E		EFD
	DESIGN	HDK
	DRAWN	HDK
	REVIEW	BJD
	QC	
	CHIEF ARCH./ ENGR.	
	PROJECT MANAGER	DWB
	FIRE PROTECTION BRANCH MANAGER	
	DESIGN DIRECTOR	

DEPARTMENT OF THE NAVY
NAVAL FACILITIES ENGINEERING COMMAND
ATLANTIC DIVISION
NAVAL STATION NORFOLK, VIRGINIA
NAVAL STATION NORFOLK, VA
PIER 2 REPLACEMENT
TITLE SHEET – DRAWING INDEX

CODE ID. NO. 80091	SIZE D
SCALE: NONE	
EFD NO. 493891	
STA. PROJ. NO. P-355	
SPEC. NO. 05-97-7041	
CONSTR. CONTR. NO. N62470-97-B-7041	
NAVFAC DRAWING NO. 4393891	
SHEET 1 OF 240	
T-1	

DRAWFORM REVISION 27 JULY 98

FILENAME: 7041T001.DWG; PLOT SCALE: 1=1, SAVED ON 03/30/99 AT 13:10, XREFS: NONE

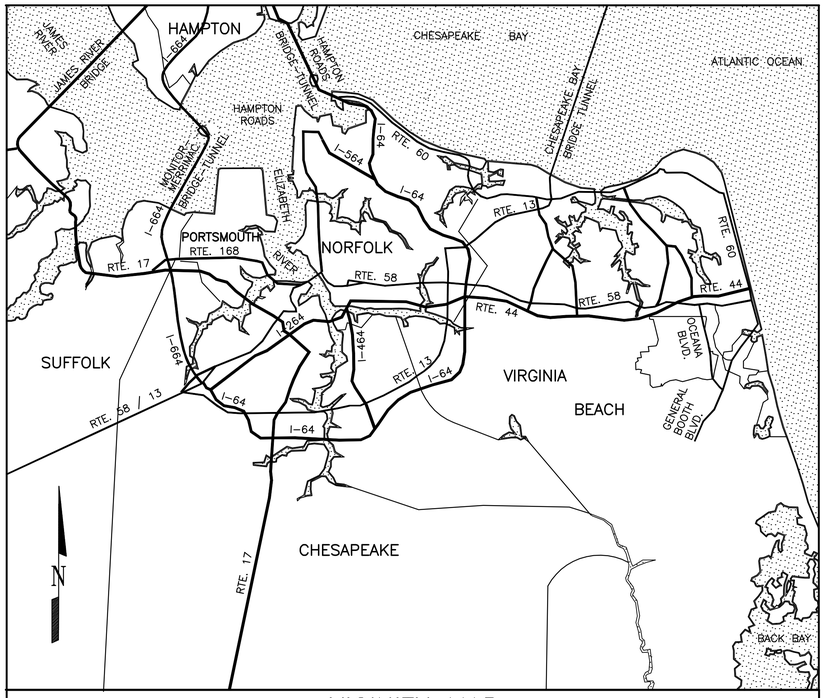

VICINITY MAP

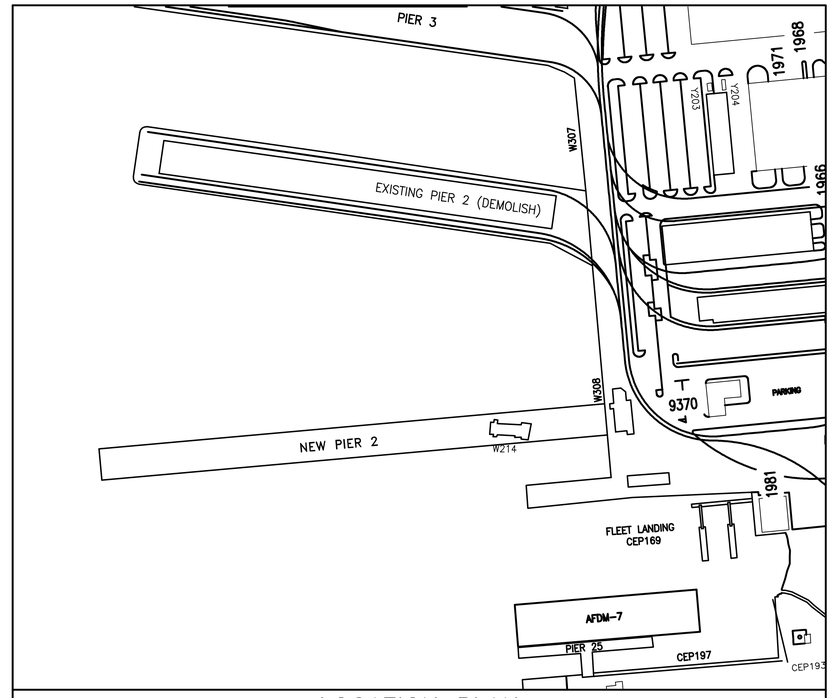

LOCATION PLAN

DRAWING INDEX (CONTINUED))

PAGE NO.	SHEET NO.	EFD DWG NO	NAVFAC DWG NO	SHEET TITLE
157	SE-10	494047	4394047	GUARD SHACK PLANS, NOTES, AND ELEVATIONS
158	SE-11	494048	4394048	GUARD SHACK DETAILS
159	SF-1	494049	4394049	LHD MOORING ARRANGEMENTS
160	SF-2	494050	4394050	LHA MOORING ARRANGEMENTS
161	SF-3	494051	4394051	LPD / LSD MOORING ARRANGEMENTS
162	SF-4	494052	4394052	AOE-1 MOORING ARRANGEMENTS
163	SF-5	494053	4394053	AOE-6 MOORING ARRANGEMENTS
164	SF-6	494054	4394054	AO-177 MOORING ARRANGEMENTS
165	SF-7	494055	4394055	AO-187 MOORING ARRANGEMENTS
166	SF-8	494056	4394056	SURFACE COMBATANT MOORING ARRANGEMENTS
167	MU-1	494057	4394057	STEAM SITE PLAN
168	MU-2	494058	4394058	POL PLAN – SITE 1
169	MU-3	494059	4394059	POL PLAN – SITE 2
170	MU-4	494060	4394060	STEAM LINE PROFILE & POL SITE 2 PROFILE
171	MU-5	494061	4394061	SITE PLAN DETAILS – STEAM & POL
172	M-1	494062	4394062	PIER 2 PLAN (BENTS 1-40), STM & PW SYSTEMS
173	M-2	494063	4394063	PIER 2 PLAN (BENTS 40-80), STM & PW SYSTEMS
174	M-3	494064	4394064	PIER 2 PLAN (BENTS 1-40), CHT & OW SYSTEMS
175	M-4	494065	4394065	PIER 2 PLAN (BENTS 40-80), CHT & OW SYSTEMS
176	M-5	494066	4394066	STEAM PRESSURE REDUCING STATION PLAN
177	M-6	494067	4394067	STM./PW SERVICE POINT PLAN
178	M-7	494068	4394068	DFM/JP5 SERVICE POINT PLAN
179	M-8	494069	4394069	WATER, SANITARY, & OWWO SERVICE TO NEW PIER 2
180	M-9	494070	4394070	OW / CHT SERVICE POINT PLAN
181	M-10	494071	4394071	CHT/OW PUMP STATION DETAILS & PUMP DATA
182	M-11	494072	4394072	SECTIONS
183	M-12	494073	4394073	DETAILS
184	EU-1	494074	4394074	LEGEND
185	EU-2	494075	4394075	PARTIAL 34.5KV SYSTEM ONE-LINE DIAGRAM
186	EU-3	494076	4394076	PIER 2 34.5KV ONE-LINE & GROUNDING DIAGRAM
187	EU-4	494077	4394077	CABLE AND CABLE WELL SCHEDULES
188	EU-5	494078	4394078	SITE PLAN 1
189	EU-6	494079	4394079	SITE PLAN 2
190	EU-7	494080	4394080	SITE PLAN 3
191	EU-8	494081	4394081	SITE PLAN 4
192	EU-9	494082	4394082	SITE PLAN 5
193	EU-10	494083	4394083	NW SWITCHING STATION SITE PLAN
194	EU-11	494084	4394084	NW SWITCHING BUS PLAN
195	EU-12	494085	4394085	NW SWITCHING STATION ONE-LINE DIAGRAM
196	EU-13	494086	4394086	NW SWITCHING STATION CONTROL BUILDING PLAN
197	EU-14	494087	4394087	TYPICAL NW BREAKER CONTROL DIAGRAM
198	EU-15	494088	4394088	NW SWITCHING STATION ELEVATIONS
199	EU-16	494089	4394089	NW SWITCHING STATION FOUNDATION PLANS AND DETAILS
200	EU-17	494090	4394090	BLDG. Z-86 AND Z-357 DEMOLITION PLANS
201	EU-18	494091	4394091	POWER MANHOLE EXPLODED VIEWS
202	EU-19	494092	4394092	COMMUNICATION MANHOLE EXPLODED VIEWS
203	EU-20	494093	4394093	MANHOLE DETAILS
204	EU-21	494094	4394094	MISCELLANEOUS SITE WORK DETAILS
205	E-1	494095	4394095	PIER CONDUIT PLAN – BENT 1 TO 20
206	E-2	494096	4394096	PIER CONDUIT PLAN – BENT 21 TO 40
207	E-3	494097	4394097	PIER CONDUIT PLAN – BENT 41 TO 60
208	E-4	494098	4394098	PIER CONDUIT PLAN – BENT 61 TO 80
209	E-5	494099	4394099	SHORE POWER SUBSTATION AREA – ENLARGED PLANS
210	E-6	494100	4394100	480V SHORE POWER SYSTEM CONNECTIONS – EAST STATIONS
211	E-7	494101	4394101	480V SHORE POWER SYSTEM CONNECTIONS – WEST STATIONS
212	E-8	494102	4394102	SECONDARY UNIT SUBSTATION ONE-LINE DIAGRAM
213	E-9	494103	4394103	SECONDARY UNIT SUBSTATION PLAN & ELEVATION
214	E-10	494104	4394104	SIMPLIFIED AC & DC SUBSTATION BREAKER CONTROL DIAGRAM
215	E-11	494105	4394105	SHORE POWER STATION DETAILS
216	E-12	494106	4394106	PIER INDUSTRAIL POWER ONE-LINE DIAGRAM
217	E-13	494107	4394107	PIER POWER AND LIGHTING PLAN – BENT 1 TO 10
218	E-14	494108	4394108	PIER POWER AND LIGHTING PLAN – BENT 10 TO 20
219	E-15	494109	4394109	PIER POWER AND LIGHTING PLAN – BENT 20 TO 30
220	E-16	494110	4394110	PIER POWER AND LIGHTING PLAN – BENT 30 TO 40
221	E-17	494111	4394111	PIER POWER AND LIGHTING PLAN – BENT 40 TO 50
222	E-18	494112	4394112	PIER POWER AND LIGHTING PLAN – BENT 50 TO 60
223	E-19	494113	4394113	PIER POWER AND LIGHTING PLAN – BENT 60 TO 70
224	E-20	494114	4394114	PIER POWER AND LIGHTING PLAN – BNET 70 TO 80
225	E-21	494115	4394115	CABLE TRAY PLANS
226	E-22	494116	4394116	CABLE ROOM PLANS
227	E-23	494117	4394117	EQUIPMENT ROOM PLANS AND ELEVATIONS
228	E-24	494118	4394118	PUMP STATION PLANS & DETAILS
229	E-25	494119	4394119	PUMP STATION CONTROL SYSTEM DIAGRAMS
230	E-26	494120	4394120	PIER CONDUIT DETAILS
231	E-27	494121	4394121	PIER PANELBOARD SCHEDULES
232	E-28	494122	4394122	PIER LIGHTING CONTACTOR PANELS
233	E-29	494123	4394123	LIGHTING FIXTURE SCHEDULE AND LIGHTING DETAILS
234	E-30	494124	4394124	HIGH MAST LIGHTING & FIRE ALARM BOX DETAILS
235	E-31	494125	4394125	TOP DECK CONDUIT SECTIONS
236	E-32	494126	4394126	BOTTOM DECK CONDUIT SECTIONS
237	E-33	494127	4394127	CONDUIT SUPPORT AND GROUNDING DETAILS
238	E-34	494128	4394128	FIRE ALARM, COMMUNICATION AND TELEPHONE DIAGRAMS
239	E-35	494129	4394129	CATHODIC PROTECTION SYSTEM DETAILS AND RISER DIAGRAMS
240	E-36	494130	4394130	CATHODIC PROTECTION SYSTEM DETAILS

REVISIONS

SYM.	DESCRIPTION	DATE	APPROVED
	TITLE FOR SHEET SE-10	3/27/98	
	MODIFIED		

DESIGNED & ENGINEERED BY: LANTDIV NAVAL FACILITIES ENGINEERING COMMAND

SEAL

APPROVED

ACTIVITY – SATISFACTORY TO

DATE

APPROVED

FOR EFD FOR COMMANDER NAVFAC

4/08/99

DATE

	A/E	EFD
DESIGN		HDK
DRAWN		HDK
REVIEW		BJD
QC		
CHIEF ARCH./ ENGR.		
PROJECT MANAGER		DWB
FIRE PROTECTION		
BRANCH MANAGER		
DESIGN DIRECTOR		

DEPARTMENT OF THE NAVY
NAVAL STATION ATLANTIC DIVISION
NAVAL FACILITIES ENGINEERING COMMAND
NAVAL STATION NORFOLK, VIRGINIA
NORFOLK, VA.

PIER 2 REPLACEMENT

VICINITY AND LOCATION MAPS – DRAWING INDEX (CONT.)

CODE ID. NO. 80091	SIZE D
SCALE: NONE	
EFD NO. 493892	
STA. PROJ. NO. P-355	
SPEC. NO. 05-97-7041	
CONSTR. CONTR. NO. N62470-97-7041	
NAVFAC DRAWING NO. 4393892	
SHEET 2 OF 240	

T-2

DRAWFORM REVISION 27 JULY 98

FILENAME: 7041T002.DWG, PLOT SCALE: 1=1, SAVED ON 03/31/99 AT 11:53, XREFS: NONE

(STATE PLANE)

NOTE

NORTH ARROWS REPRESENT STATE PLANE NORTH UNLESS OTHERWISE NOTED.

NOTE: SEE CIVIL SITE PLANS FOR ADDITIONAL COORDINATES FOR THE NEW PIER AND RELIEVING PLATFORM.

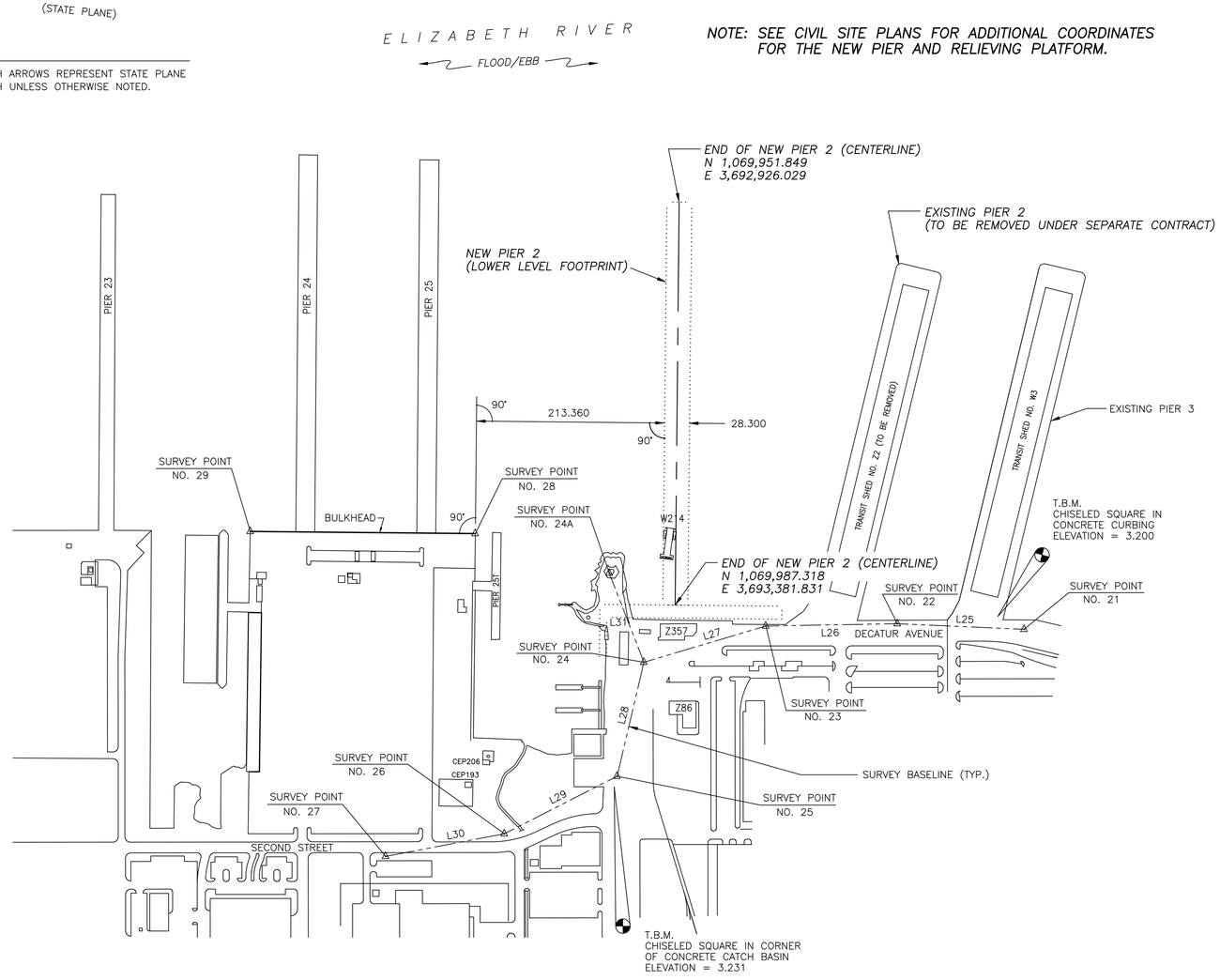

NEW PIER 2 LAYOUT PLAN

SCALE 1:3000

SURVEY COORDINATE POINT LISTING				
POINT NUMBER	NORTHING	EASTING	ELEV. (*) (METERS)	DESCRIPTION
21	1,070,384.192	3,693,374.651	3.23	PK NAIL
22	1,070,240.369	3,693,380.908	2.936	PK NAIL
23	1,070,091.910	3,693,396.525	3.024	PK NAIL
24	1,069,957.693	3,693,449.623	3.327	PK NAIL
25	1,069,938.702	3,693,581.067	3.394	CUT CROSS
26	1,06,817.010	3,693,657.248	3.893	CUT CROSS
27	1,069,685.040	3,693,694.647	4.167	CUT CROSS
24A	1,069,909.641	3,693,352.194	3.095	DRILL HOLE
28	1,069,754.381	3,693,320.921		CORNER OF BULKHEAD
29	1,069,499.799	3,693,340.731		CORNER OF BULKHEAD
NOTE: COORDINATE VALUES ARE BASED ON METRIC STATE PLANE GRID				

(*) ELEVATIONS (IN METERS) ARE BASED UPON STATION LOW WATER DATUM (SLWD=0.000)

BASELINE TABLE (USING STATE PLANE NORTH)		
LINE	DIRECTION	DISTANCE
L25	S02°29'28"E	143.959
L26	S06°00'18"E	149.278
L27	S21°35'03"E	144.338
L28	S81°46'43"E	132.809
L29	S32°02'49"E	143.570
L30	S15°49'21"E	137.167
L31	S63°44'51"W	108.634

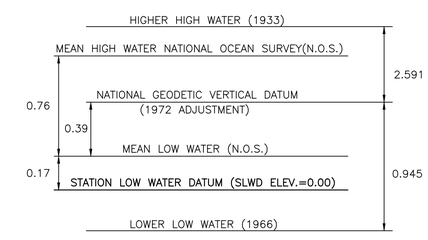

DIAGRAM OF DATUM PLANE FOR NORFOLK NAVAL STATION

NOT TO SCALE
(DIMENSIONS SHOWN ARE METERS)

GRAPHIC SCALE 1:3000

1:3000 0 50 100 200 300m

REVISIONS

SYM.	DESCRIPTION	DATE	APPROVED
	REVISED WIDTH OF NEW RELIEVING PLATFORM	3/30/99	JTH

DESIGNED & ENGINEERED BY: LANTDIV NAVAL FACILITIES ENGINEERING COMMAND

SEAL

APPROVED

ACTIVITY – SATISFACTORY TO

DATE

APPROVED

FOR EFD FOR COMMANDER, NAVFAC

4/08/99

DATE

A/E	EFD
DESIGN	TAR
DRAWN	TAR
REVIEW	JSC
QC	
CHIEF ARCH./ ENGR.	
PROJECT MANAGER	DWB
FIRE PROTECTION	
BRANCH MANAGER	
DESIGN DIRECTOR	

DEPARTMENT OF THE NAVY
NAVAL FACILITIES ENGINEERING COMMAND
NAVAL STATION
ATLANTIC DIVISION
NAVAL STATION
NORFOLK, VIRGINIA

PIER 2 REPLACEMENT

NEW PIER 2 LAYOUT PLAN

CODE ID. NO. 80091 | SIZE D

SCALE: AS NOTED

EFD NO. 493894

STA. PROJ. NO. P–355

SPEC. NO. 05–97–7041

CONSTR. CONTR. NO. N62470–97–B–7041

NAVFAC DRAWING NO. 4393894

SHEET 4 OF 240

C–2

FILENAME: 7041C0R2.DWG, PLOT SCALE: 1=1, SAVED ON 04/08/99 AT 09:03, XREFS: NONE

DRAWFORM REVISION 27 JULY 98

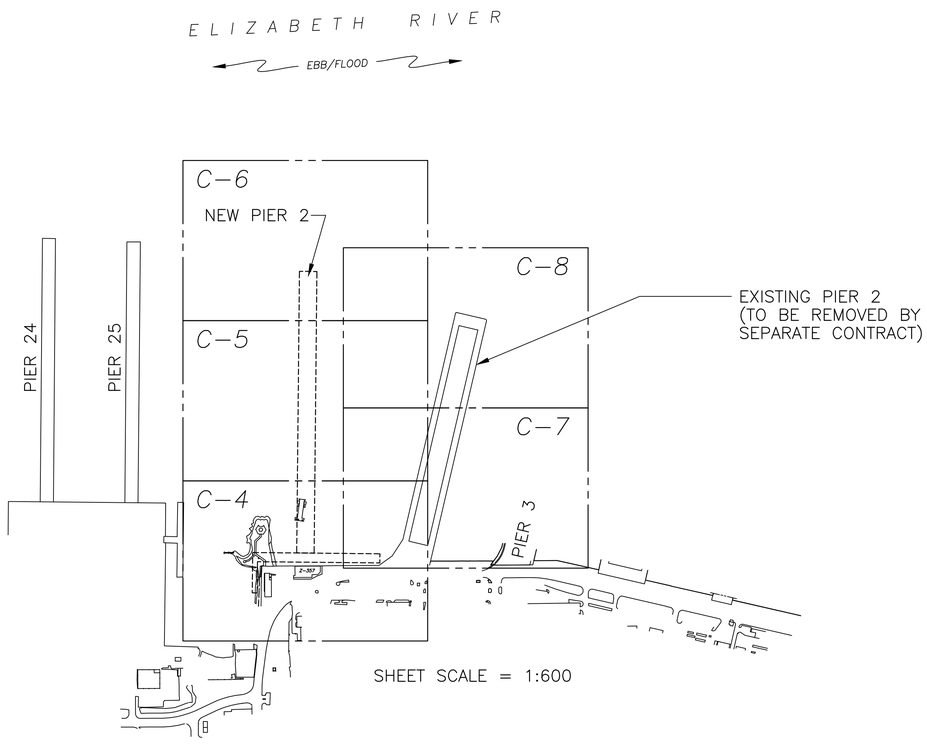

KEY PLAN (SHEETS C-4 THROUGH C-8)

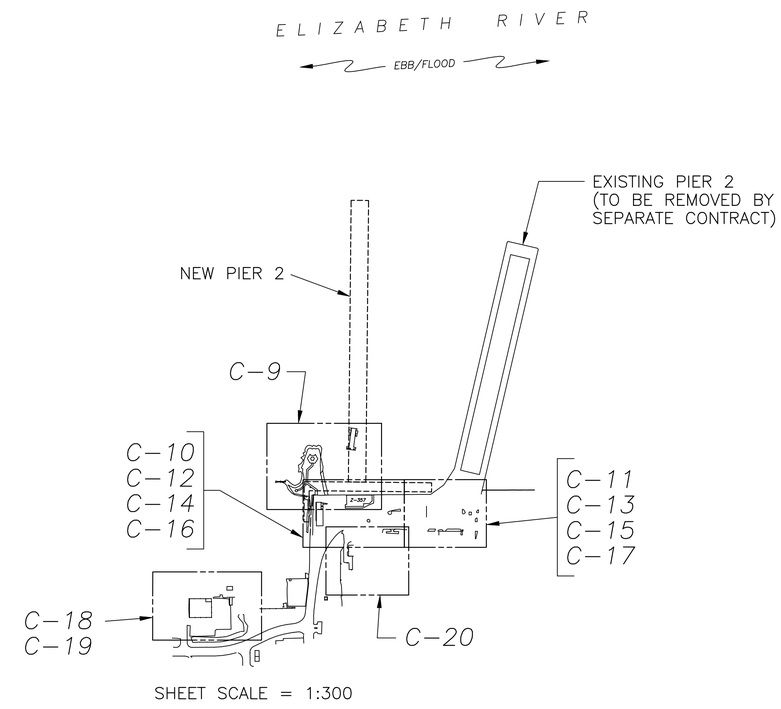

KEY PLAN (SHEETS C-9 THROUGH C-20)

KEY PLANS (CIVIL SHEETS)

NTS

SYM.	DESCRIPTION	DATE	APPROVED
	REVISED WIDTH OF NEW RELIEVING PLATFORM	3/30/99	JTH

REVISIONS

DESIGNED & ENGINEERED BY: LANTDIV NAVAL FACILITIES ENGINEERING COMMAND

SEAL

APPROVED
ACTIVITY – SATISFACTORY TO
DATE
APPROVED
FOR EFD FOR COMMANDER NAVFAC
DATE 4/08/99

A/E	EFD
DESIGN	TAR
DRAWN	TAR
REVIEW	JSC
QC	
CHIEF ARCH./ ENGR.	
PROJECT MANAGER	DWB
FIRE PROTECTION	
BRANCH MANAGER	
DESIGN DIRECTOR	

DEPARTMENT OF THE NAVY
NAVAL FACILITIES ENGINEERING COMMAND
ATLANTIC DIVISION
NORFOLK, VIRGINIA
NAVAL STATION
NORFOLK, VIRGINIA
PIER 2 REPLACEMENT
KEY PLANS (CIVIL SHEETS)

CODE ID. NO. 80091 | SIZE D
SCALE: NONE
EFD NO. 493895
STA. PROJ. NO. P-355
SPEC. NO. 05-97-7041
CONSTR. CONTR. NO. N62470-97-B-7041
NAVFAC DRAWING NO. 4393895
SHEET 5 OF 240
C-3

DRAWFORM REVISION 27 JULY 98

FILENAME: 7041COR3.DWG, PLOT SCALE: 1=1, SAVED ON 04/08/99 AT 09:05, XREFS: NONE

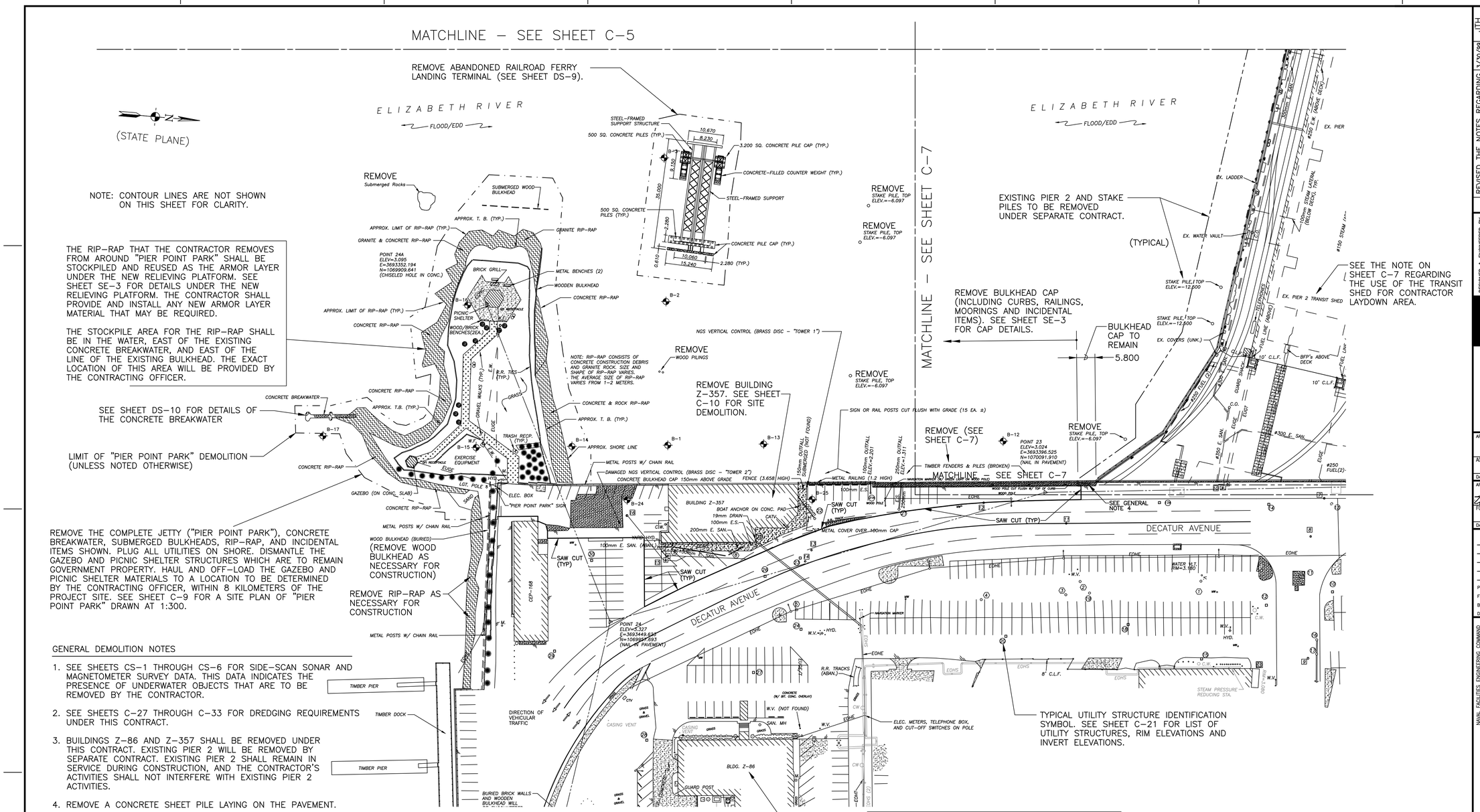

GENERAL DEMOLITION NOTES

1. SEE SHEETS CS–1 THROUGH CS–6 FOR SIDE–SCAN SONAR AND MAGNETOMETER SURVEY DATA. THIS DATA INDICATES THE PRESENCE OF UNDERWATER OBJECTS THAT ARE TO BE REMOVED BY THE CONTRACTOR.
2. SEE SHEETS C–27 THROUGH C–33 FOR DREDGING REQUIREMENTS UNDER THIS CONTRACT.
3. BUILDINGS Z–86 AND Z–357 SHALL BE REMOVED UNDER THIS CONTRACT. EXISTING PIER 2 WILL BE REMOVED BY SEPARATE CONTRACT. EXISTING PIER 2 SHALL REMAIN IN SERVICE DURING CONSTRUCTION, AND THE CONTRACTOR'S ACTIVITIES SHALL NOT INTERFERE WITH EXISTING PIER 2 ACTIVITIES.
4. REMOVE A CONCRETE SHEET PILE LAYING ON THE PAVEMENT.
5. REMOVE ALL PAVEMENT, SLABS, AND BUILDING FOUNDATIONS FROM THE INDICATED SAW CUT LINE TO THE EXISTING BULKHEAD. FOUNDATIONS SHALL BE REMOVED TO 1 METER BELOW GRADE OR AS REQUIRED TO INSTALL NEW WORK OR AS INDICATED ON OTHER CONTRACT DRAWINGS. SEE SHEETS C–9, C–10 AND C–11 FOR SPECIFIC SITE DEMOLITION REQUIREMENTS. SEE SHEETS MU–1 AND MU–2, AND EU–5 THROUGH EU–9 FOR ADDITIONAL PAVEMENT REMOVAL AND REPLACEMENT REQUIREMENTS.
6. AT LEAST ONE LANE OF TRAFFIC SHALL REMAIN OPEN ON DECATUR AVENUE, IN EACH DIRECTION OF TRAVEL, DURING CONSTRUCTION. THE CONTRACTOR SHALL PROVIDE ALL TEMPORARY EXCAVATION COVERS, BARRICADES, SAFETY DEVICES, AND TRAFFIC CONTROL PERSONNEL WHILE WORKING IN OR ADJACENT TO ROADWAYS AND PARKING LOTS.

DEMOLITION PLAN (1 OF 5)

1 : 600

1:600 0 10 20 30 40 50 60m

BUILDING Z–86 SHALL BE USED BY THE CONTRACTOR FOR FIELD OFFICES. THE PARKING AREAS IMMEDIATELY ADJACENT TO BUILDING Z–86 SHALL BE USED BY THE CONTRACTOR FOR VEHICLE PARKING. THIS INCLUDES THE PARKING SPACES ON THE NORTH, SOUTH AND WEST SIDES OF THE BUILDING, AND THE PARKING LOT ON THE EAST SIDE OF THE BUILDING. THESE PARKING AREAS ARE NOT TO BE USED FOR STORAGE TRAILERS, PORTABLE FIELD OFFICES, OR MATERIAL LAYDOWN SPACE. THEY ARE TO BE USED FOR VEHICLE PARKING ONLY. THE EXACT LIMITS OF THESE PARKING AREAS WILL BE IDENTIFIED BY THE CONTRACTING OFFICER. THE CONTRACTOR SHALL BE RESPONSIBLE FOR MAINTAINING THE BUILDING AND PARKING AREAS. THE CONTRACTOR SHALL PROVIDE NORMAL MAINTENANCE, SECURITY, HOUSEKEEPING, ETC. DURING THE CONTRACT. ANY MODIFICATIONS TO SUIT THE CONTRACTOR WILL BE AT NO COST TO THE GOVERNMENT. THE GOVERNMENT WILL PROVIDE UTILITIES (I.E., WATER, SANITARY SEWER, STEAM AND ELECTRICITY) IN ACCORDANCE WITH THE CONTRACT SPECIFICATIONS. THE CONTRACTOR SHALL REIMBURSE THE GOVERNMENT FOR THESE UTILITIES IN ACCORDANCE WITH THE CONTRACT SPECIFICATIONS. TELEPHONE AND OTHER COMMUNICATION SERVICES WILL NOT BE PROVIDED BY THE GOVERNMENT. THE CONTRACTOR SHALL BE RESPONSIBLE FOR OBTAINING TELEPHONE AND OTHER COMMUNICATION SERVICES FROM THE APPROPRIATE LOCAL COMPANY.

THE CONTRACTOR SHALL REMOVE BUILDING Z–86 NEAR THE COMPLETION OF THIS CONTRACT, AS DETERMINED BY THE CONTRACTING OFFICER. SEE SHEET C–20 FOR BUILDING Z–86 SITE DEMOLITION.

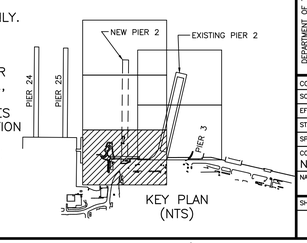

KEY PLAN (NTS)

SYM.	DESCRIPTION	DATE	APPROVED
	REVISED THE NOTES REGARDING RIP–RAP STOCKPILING AND USE OF BUILDING Z–86	3/30/99	JTH

REVISIONS

DESIGNED & ENGINEERED BY: LANTDIV NAVAL FACILITIES ENGINEERING COMMAND

SEAL

APPROVED
ACTIVITY – SATISFACTORY TO
DATE
APPROVED
FOR EFD FOR COMMANDER NAVFAC
4/08/99
DATE

A/E	EFD
DESIGN	TAR
DRAWN	TAR
REVIEW	JSC
QC	
CHIEF ARCH./ ENGR.	
PROJECT MANAGER	DWB
FIRE PROTECTION	
BRANCH MANAGER	
DESIGN DIRECTOR	

DEPARTMENT OF THE NAVY — NAVAL FACILITIES ENGINEERING COMMAND
ATLANTIC DIVISION
NAVAL STATION NORFOLK, VIRGINIA
NAVAL STATION NORFOLK, VIRGINIA
PIER 2 REPLACEMENT
DEMOLITION PLAN (1 OF 5)

CODE ID. NO. 80091	SIZE D
SCALE: 1:600	
EFD NO. 493896	
STA. PROJ. NO. P–355	
SPEC. NO. 05–97–7041	
CONSTR. CONTR. NO. N62470–97–B–7041	
NAVFAC DRAWING NO. 4393896	
SHEET 6 OF 240	

C–4

FILENAME: 7041CDR4.DWG, PLOT SCALE: 1=1, SAVED ON 04/08/99 AT 09:07, XREFS: 7041CXO1.DWG

DRAWFORM REVISION 27 JULY 98

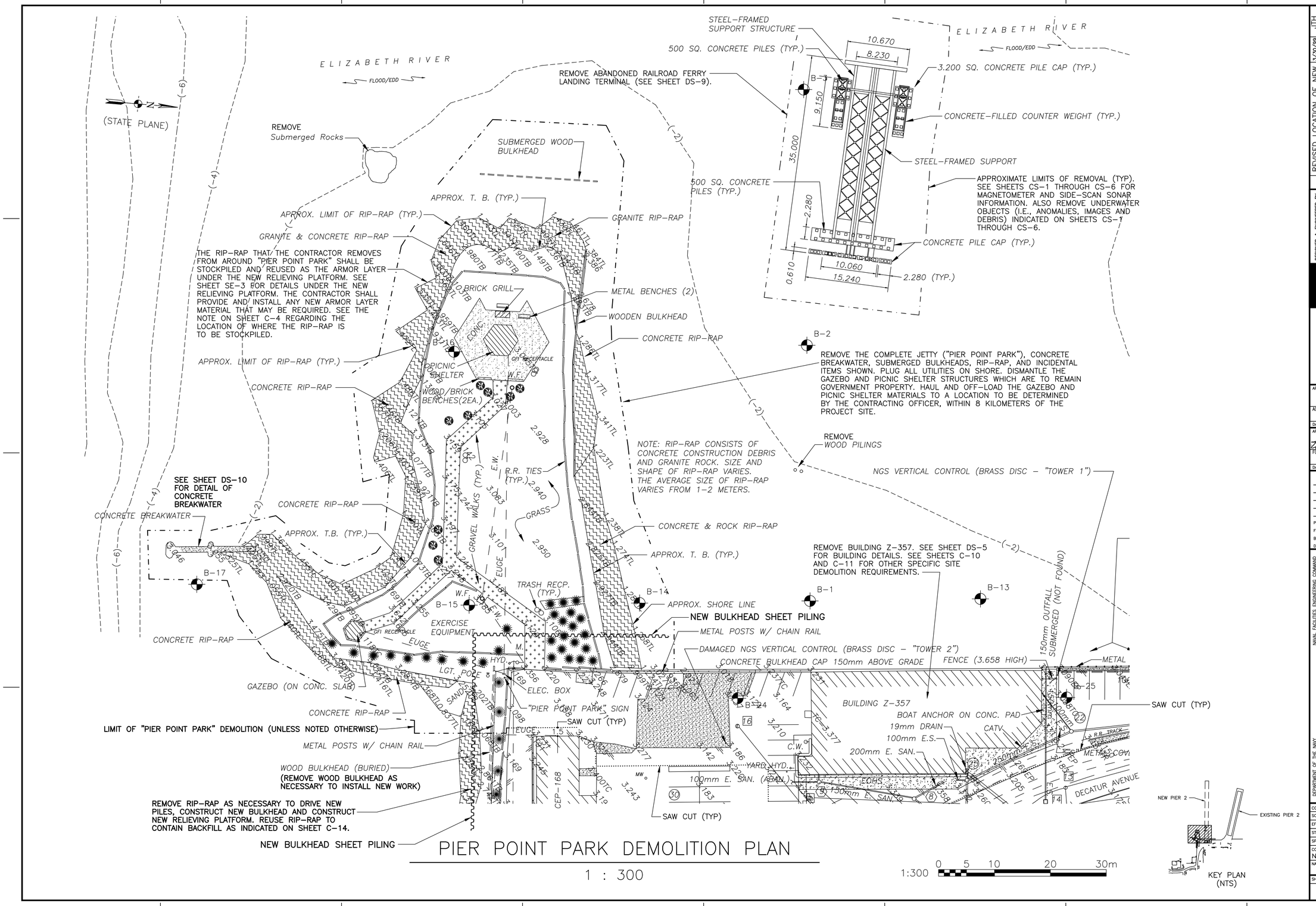

PIER POINT PARK DEMOLITION PLAN

1 : 300

REVISIONS				
SYM.	DESCRIPTION	DATE	APPROVED	
	REVISED LOCATION OF NEW BULKHEAD SHEET PILING	3/30/99	JTH	

DESIGNED & ENGINEERED BY: LANTDIV NAVAL FACILITIES ENGINEERING COMMAND

SEAL

APPROVED

ACTIVITY - SATISFACTORY TO

DATE

APPROVED

FOR EFD FOR COMMANDER NAVFAC 4/08/99

DATE

A/E	EFD
DESIGN	TAR
DRAWN	TAR
REVIEW	JSC
QC	
CHIEF ARCH./ ENGR.	
PROJECT MANAGER	DWB
FIRE PROTECTION	
BRANCH MANAGER	
DESIGN DIRECTOR	

DEPARTMENT OF THE NAVY — NAVAL FACILITIES ENGINEERING COMMAND — ATLANTIC DIVISION — NAVAL STATION NORFOLK, VIRGINIA

PIER 2 REPLACEMENT

PIER POINT PARK DEMOLITION

CODE ID. NO. 80091	SIZE D
SCALE: 1:600	
EFD NO. 493901	
STA. PROJ. NO. P-355	
SPEC. NO. 05-97-7041	
CONSTR. CONTR. NO. N62470-97-B-7041	
NAVFAC DRAWING NO. 4393901	
SHEET 11 OF 240	

C-9

FILENAME: 7041CORG.DWG, PLOT SCALE: 1=1, SAVED ON 04/08/99 AT 09:09, XREFS: 7041CXO1.DWG

DRAWFORM REVISION 27 JULY 98

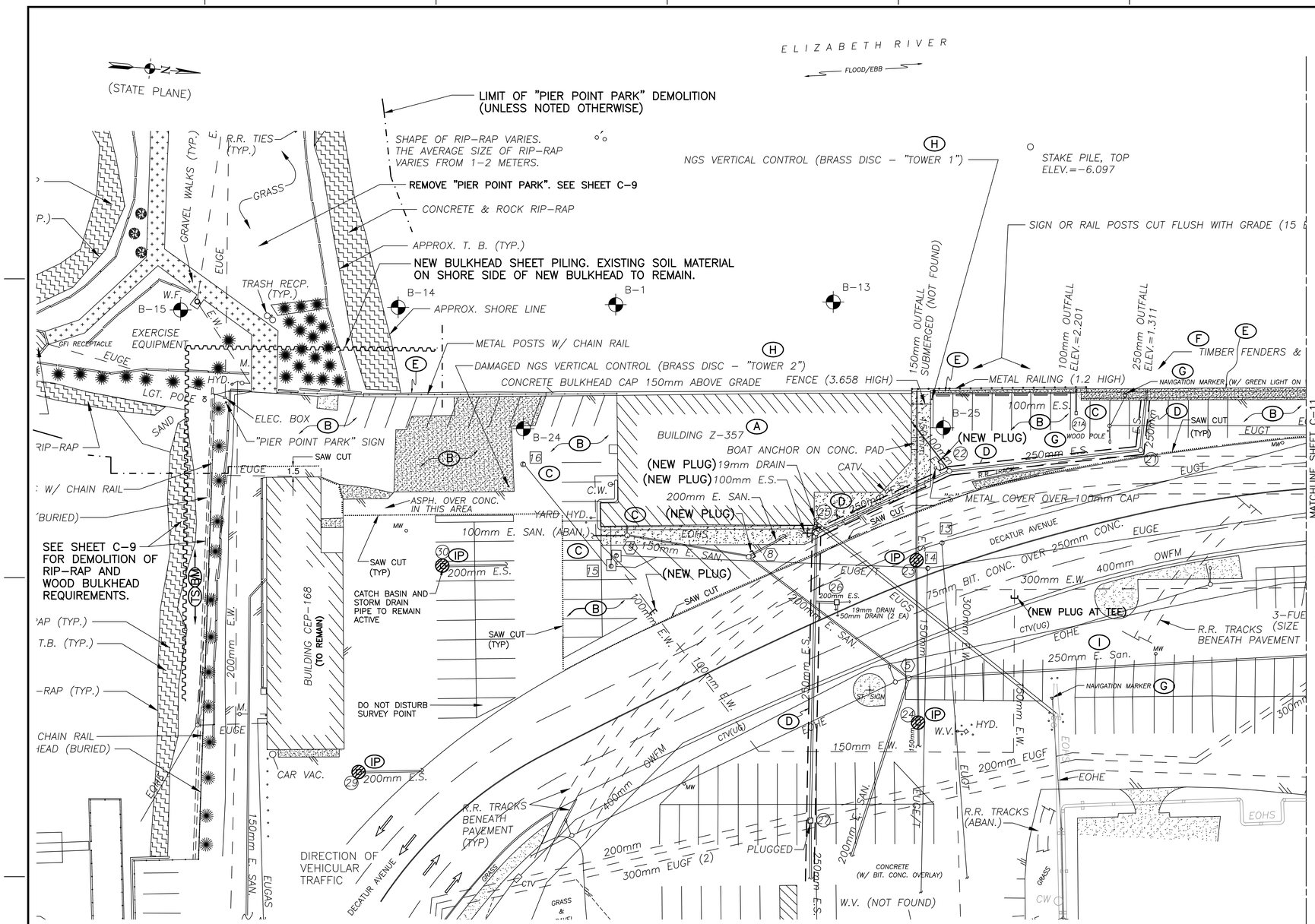

GENERAL DEMOLITION NOTES

1. FOR ADDITIONAL PAVEMENT REMOVAL REQUIREMENTS TO INSTALL NEW UTILITIES, SEE SHEETS C-11, C-12, C-13, MECHANICAL SITE PLANS, AND ELECTRICAL SITE PLANS.
2. SEE MECHANICAL AND ELECTRICAL SHEETS FOR ADDITIONAL DEMOLITION REQUIREMENTS.
3. SEE DETAIL "G" ON SHEET C-22 FOR A PLAN VIEW DETAIL OF EXISTING MANHOLE (22).
4. FOR BIDDING PURPOSES ASSUME;
   (A). BITUMINOUS SURFACES CONSIST OF 100mm THICK BITUMINOUS CONCRETE OVER 250mm UNREINFORCED CONCRETE.
   (B). CONCRETE WALKS ARE 100mm THICK.
   (C). OLD CONCRETE BUILDING FOUNDATION SLABS ARE 300mm THICK, REINFORCED.
   (D). ABANDONED RAILROAD TRACKS (INCLUDING TIES) ARE ENCASED IN 600mm THICK UNREINFORCED CONCRETE AND OVERLAYED WITH 200mm THICK BITUMINOUS CONCRETE PAVEMENT.
5. IN LIEU OF REMOVING UTILITY STRUCTURES IN THEIR ENTIRETY, THE CONTRACTOR MAY REMOVE THE RIM AND COVER, REMOVE THE STRUCTURE TO 300mm BELOW GRADE AND FILL THE REMAINING STRUCTURE WITH SELECT FILL. ALL PIPES AND CONDUITS ABANDONED IN THE STRUCTURE SHALL BE PLUGGED.
6. REMOVE THE EXISTING 150mm SANITARY PIPE BETWEEN SANITARY MANHOLES (8) AND (9). SEE SHEET C-16 FOR NEW UTILITY CONSTRUCTION IN THIS AREA.
7. EXISTING UTILITY STRUCTURE COVERS AND LIDS ARE TO REMAIN UNDISTURBED, UNLESS SPECIFIC WORK ON A STRUCTURE IS INDICATED.

SPECIFIC DEMOLITION NOTES

(A) REMOVE BUILDING Z-357. ALL UTILITY PIPES THAT SERVE THE BUILDING, INCLUDING ABANDONED PIPES, SHALL BE PLUGGED AND ABANDONED IN PLACE. SEE MECHANICAL AND ELECTRICAL DEMOLITION SHEETS FOR ADDITIONAL BUILDING DEMOLITION REQUIREMENTS.

(B) REMOVE ALL PAVEMENTS, WALKS, UTILITY STRUCTURES, WOOD POLES, TIMBER FENDERS & PILES, RAILINGS, POSTS, FENCES, R.R. TRACKS, YARD HYDRANT, COOLING WELL, VEHICLE BUMPER GUARDS, AND ALL OTHER FEATURES SHOWN WITHIN THE LIMITS OF THE SAW CUT LINE. FOUNDATIONS AND UTILITY LINES MAY BE ABANDONED IN PLACE. UNDERGROUND UTILITY PIPES AND DUCTS MAY BE REMOVED AND PLUGGED AS NECESSARY TO INSTALL NEW WORK.

(C) REMOVE STRUCTURES 15, 16, (9), AND (21A).

(D) 250mm STORM DRAIN LINES AND MANHOLES INDICATED SHALL REMAIN ACTIVE DURING CONSTRUCTION. REPLACE THE EXISTING 250mm OUTFALL PIPE FROM MANHOLE (21) TO THE BULKHEAD AS SHOWN ON SHEET C-17. PROVIDE TEMPORARY OUTFALL FEATURES FROM MANHOLE (21) AS NECESSARY DURING CONSTRUCTION.

(E) SEE SHEET SE-3 FOR REMOVAL OF THE CONCRETE BULKHEAD CAP. REMOVE THE CONCRETE BULKHEAD AS NECESSARY TO INSTALL NEW WORK.

(F) REMOVE ALL TIMBER FENDERS AND PILES, INCLUDING TIMBERS THAT HAVE FALLEN INTO THE RIVER.

(G) WOOD POLES, NAVIGATIONAL AIDS AND LIGHTS ARE TO REMAIN ACTIVE.

(H) REMOVE NGS VERTICAL CONTROL SURVEY MONUMENTS "TOWER 1" AND "TOWER 2". THE MONUMENT BRASS DISCS SHALL REMAIN GOVERNMENT PROPERTY AND DELIVERED TO THE CONTRACTING OFFICER. THE CONTRACTING OFFICER WILL FORWARD THE DISCS TO MR. TERRY RILEY (LANTDIV, PHONE 322-4286).

(I) REMOVE THE ø250 SANITARY PIPE BETWEEN SANITARY MANHOLES (5) AND (4), AND BETWEEN (4) AND (3). SEE SHEETS C-16 AND C-17 FOR NEW WORK.

EROSION AND SEDIMENT CONTROL LEGEND

- (IP) INLET PROTECTION
- (SF) SILT FENCE
- (CE) CONSTRUCTION ENTRANCE (CONTRACTOR TO DETERMINE LOCATION)
- (CIP) CULVERT INLET PROTECTION
- (TS) TEMPORARY SEEDING
- (BM) SOIL STABILIZATION BLANKETS AND MATTING

SEE SHEET C-11 FOR EROSION AND SEDIMENT CONTROL NOTES

SITE DEMOLITION PLAN (1 OF 2)

1 : 300

1:300 0 5 10 20 30m

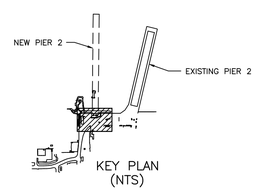

REVISIONS				
SYM.	DESCRIPTION	DATE	APPROVED	
	REVISED LOCATION OF NEW BULKHEAD SHEET PILING	3/30/99	JTH	

DESIGNED & ENGINEERED BY: LANTDIV NAVAL FACILITIES ENGINEERING COMMAND

SEAL

APPROVED

ACTIVITY - SATISFACTORY TO

DATE

APPROVED FOR EFD FOR COMMANDER NAVFAC 4/08/99

DATE

A/E	EFD
DESIGN	TAR
DRAWN	TAR
REVIEW	JSC
QC	
CHIEF ARCH./ ENGR.	
PROJECT MANAGER	DWB
FIRE PROTECTION BRANCH MANAGER	
DESIGN DIRECTOR	

DEPARTMENT OF THE NAVY — NAVAL FACILITIES ENGINEERING COMMAND — ATLANTIC DIVISION — NAVAL STATION NORFOLK, VIRGINIA

PIER 2 REPLACEMENT

SITE DEMOLITION PLAN (1 OF 2)

CODE ID. NO. 80091	SIZE D
SCALE:	1:300
EFD NO.	493902
STA. PROJ. NO.	P-355
SPEC. NO.	05-97-7041
CONSTR. CONTR. NO.	N62470-97-B-7041
NAVFAC DRAWING NO.	4393902
SHEET 12 OF 240	

C-10

FILENAME: 7041CR10.DWG, PLOT SCALE: 1=1, SAVED ON 04/08/99 AT 09:11, XREFS: 7041CX01.DWG

DRAWFORM REVISION 27 JULY 98

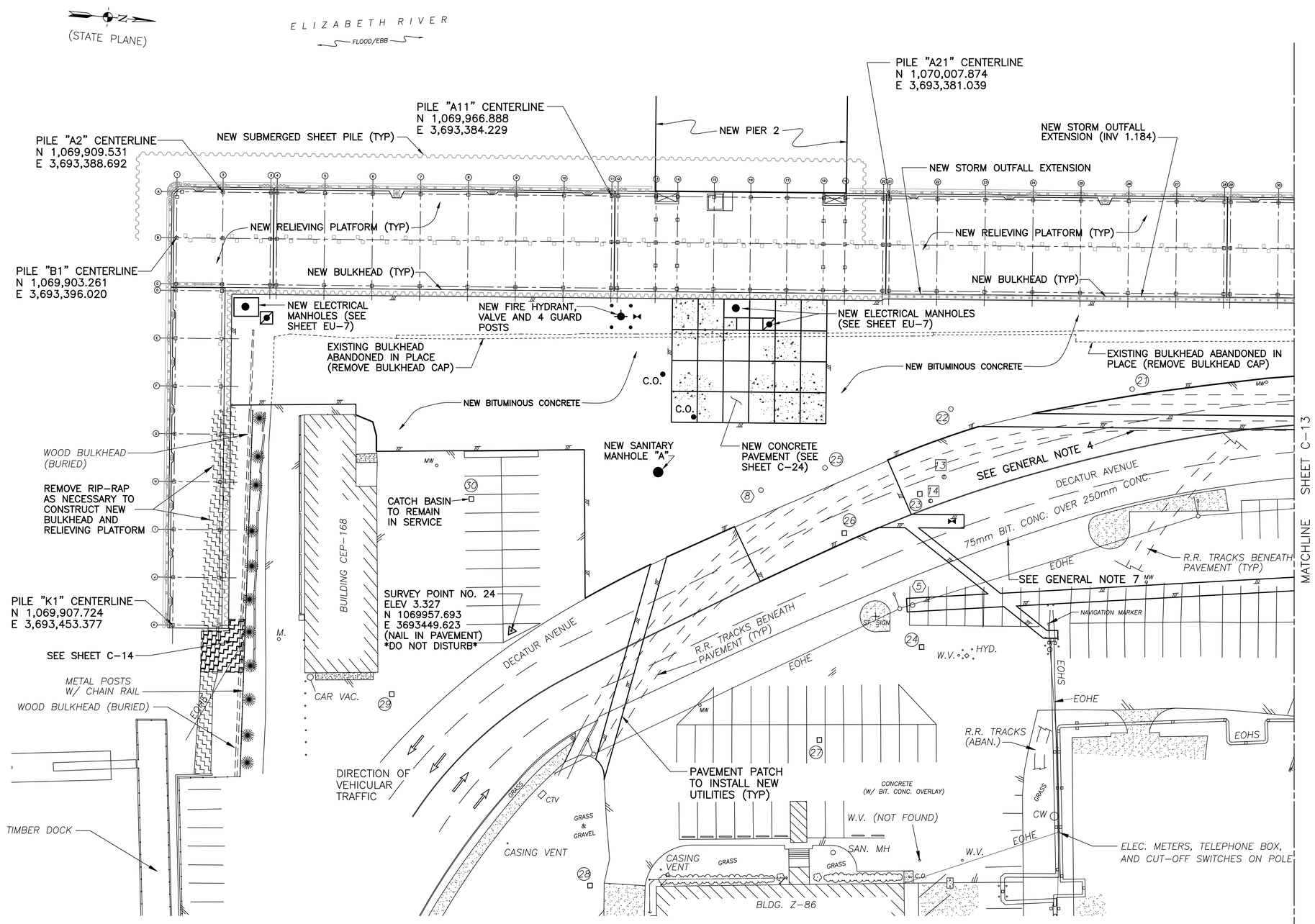

NEW SITE LAYOUT PLAN (1 OF 2)

1 : 300

1:300 0 5 10 20 30m

GENERAL NOTES

1. SEE SHEET C-23 FOR NEW PAVEMENT CROSS-SECTION DETAILS.
2. SEE SHEET C-16 FOR NEW CIVIL UTILITIES.
3. COORDINATE CONSTRUCTION OF NEW WATER, SANITARY, OWWO AND STORM DRAINAGE UTILITIES WITH CONSTRUCTION OF NEW MECHANICAL AND ELECTRICAL UTILITIES SHOWN ON SHEETS MU-2, EU-7 AND EU-8.
4. REMOVE ABANDONED RAILROAD TRACKS AS NECESSARY TO INSTALL NEW WORK. SEE GENERAL DEMOLITION NOTE 4(D) ON SHEET C-10 FOR BIDDING INFORMATION.
5. FOR SURVEY POINT COORDINATES SEE SHEET C-2. FOR ADDITIONAL NEW WORK COORDINATES SEE SHEET C-13.
6. THE CONTRACTOR SHALL STRIPE THE NEW BITUMINOUS CONCRETE PAVEMENT IN DECATUR AVENUE (I.E., LANE DIVIDERS, EDGE LINE, CENTERLINE, ETC.), AND WHERE PAVEMENT IS REMOVED AND REPLACED TO INSTALL NEW UTILITIES (I.E., PARKING SPACE LINES, ETC.). NEW STRIPPING SHALL MATCH EXISTING STRIPPING (I.E., COLOR, WIDTH, LENGTH, SINGLE LINE, DOUBLE LINE, ETC.). BASE BID ON 550 METERS OF 100MM WIDE, NON-REFLECTIVE STRIPPING.
7. REMOVE EXISTING PAVEMENT TO INSTALL WATER LINE PLUG AT TEE. BACKFILL AND PAVE. THIS AREA NOT SHOWN FOR CLARITY.

NEW PIER 2 COORDINATES

℄ WESTERN END OF LOWER LEVEL:
N 1,069,951.849
E 3,692,926.029

PIER PILE "80C":
N 1,069,951.907
E 3,692,926.777

PIER PILE "1C":
N 1,069,987.260
E 3,693,381.083

℄ EASTERN END OF LOWER LEVEL:
N 1,069,987.318
E 3,693,381.831

NEW UTILITY STRUCTURE LOCATIONS

℄ NEW FIRE HYDRANT:
N 1,069,969.778
E 3,693,401.871

℄ NEW SANITARY MANHOLE "A":
N 1,069,977.281
E 3,693,424.344

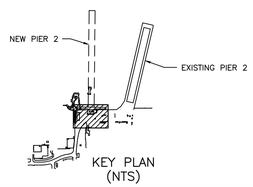

KEY PLAN (NTS)

SYM.	DESCRIPTION	DATE	APPROVED
	REVISED WIDTH OF NEW RELIEVING PLATFORM. RE-DESIGNED SITE.	3/30/99	JTH

REVISIONS

DESIGNED & ENGINEERED BY: LANTDIV NAVAL FACILITIES ENGINEERING COMMAND

SEAL

APPROVED

ACTIVITY – SATISFACTORY TO

DATE

APPROVED
FOR EFD FOR COMMANDER NAVFAC
4/08/99

DATE

A/E	EFD
DESIGN	TAR
DRAWN	TAR
REVIEW	JSC
QC	
CHIEF ARCH./ ENGR.	
PROJECT MANAGER	DWB
FIRE PROTECTION BRANCH MANAGER	
DESIGN DIRECTOR	

DEPARTMENT OF THE NAVY
NAVAL STATION
ATLANTIC DIVISION
NAVAL FACILITIES ENGINEERING COMMAND
NORFOLK, VIRGINIA

NAVAL STATION
NORFOLK, VIRGINIA

PIER 2 REPLACEMENT

NEW SITE LAYOUT PLAN (1 OF 2)

CODE ID. NO. 80091	SIZE D
SCALE: 1:300	
EFD NO. 493904	
STA. PROJ. NO. P-355	
SPEC. NO. 05-97-7041	
CONSTR. CONTR. NO. N62470-97-B-7041	
NAVFAC DRAWING NO. 4393904	
SHEET 14 OF 240	

C-12

FILENAME: 7041CR12.DWG, PLOT SCALE: 1=1, SAVED ON 04/08/99 AT 09:16, XREFS: NONE

DRAWFORM REVISION 27 JULY 98

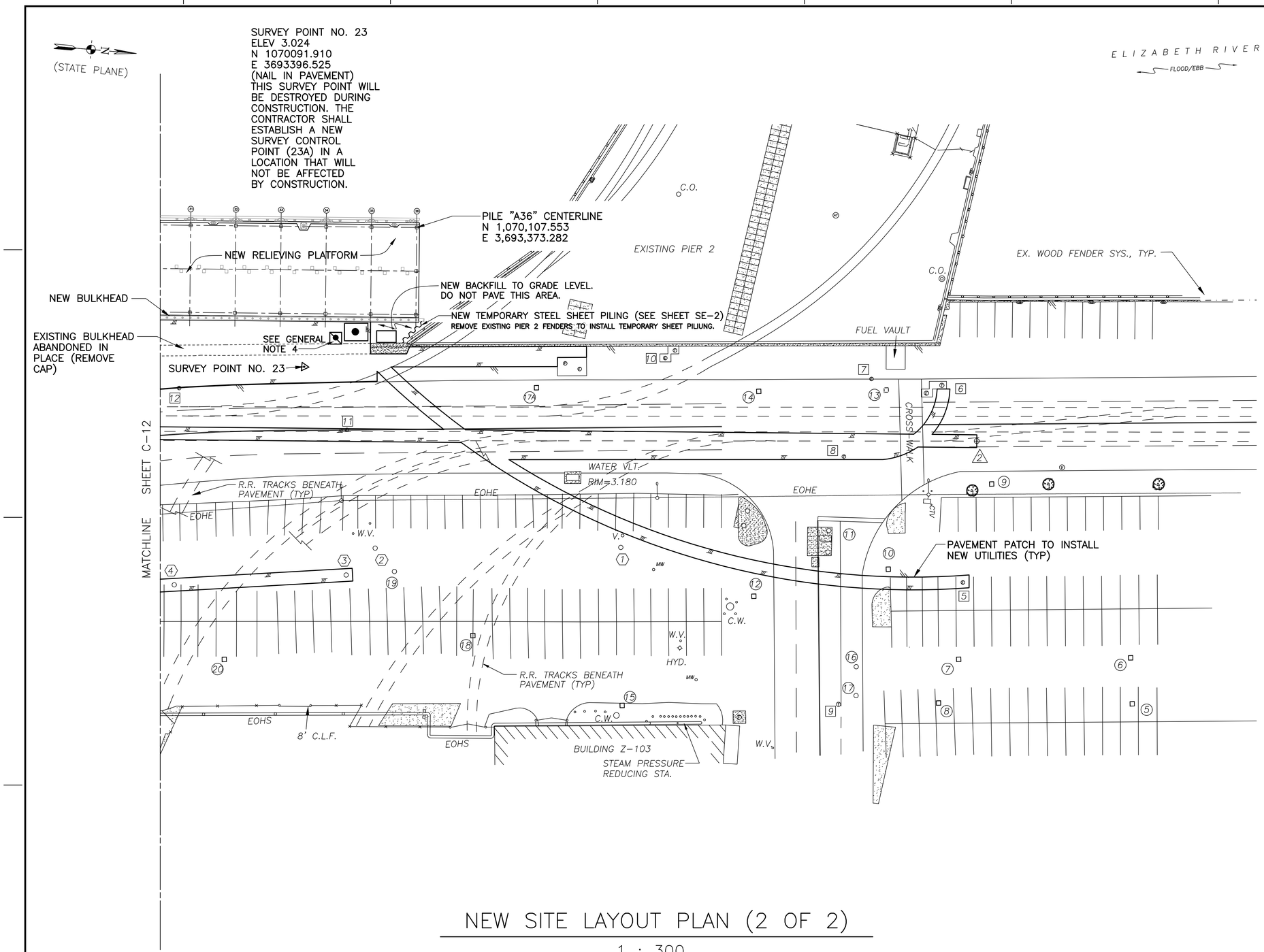

GENERAL NOTES

1. SEE SHEET C-23 FOR NEW PAVEMENT CROSS-SECTION DETAILS.
2. SEE SHEET C-17 FOR NEW CIVIL UTILITIES.
3. COORDINATE CONSTRUCTION OF NEW WATER, SANITARY, OWWO AND STORM DRAINAGE UTILITIES WITH CONSTRUCTION OF NEW MECHANICAL AND ELECTRICAL UTILITIES SHOWN ON SHEETS MU-2, EU-7 AND EU-8.
4. SEE SHEET EU-8 FOR NEW ELECTRICAL MANHOLES, DUCTS AND SWITCH.

NEW SITE LAYOUT PLAN (2 OF 2)

1 : 300

1:300 0 5 10 20 30m

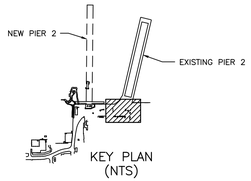

SYM.	DESCRIPTION	DATE	APPROVED
	REVISED WIDTH OF NEW RELIEVING PLATFORM. RE-DESIGNED SITE.	3/30/99	JTH

REVISIONS

DESIGNED & ENGINEERED BY: LANTDIV NAVAL FACILITIES ENGINEERING COMMAND

SEAL

APPROVED

ACTIVITY - SATISFACTORY TO

DATE

APPROVED FOR EFD FOR COMMANDER NAVFAC 4/08/99

DATE

A/E		EFD
	DESIGN	TAR
	DRAWN	TAR
	REVIEW	JSC
	QC	
	CHIEF ARCH./ ENGR.	
	PROJECT MANAGER	DWB
	FIRE PROTECTION BRANCH MANAGER	
	DESIGN DIRECTOR	

DEPARTMENT OF THE NAVY
NAVAL FACILITIES ENGINEERING COMMAND
ATLANTIC DIVISION
NAVAL STATION NORFOLK, VIRGINIA
NAVAL STATION NORFOLK, VIRGINIA
PIER 2 REPLACEMENT
NEW SITE LAYOUT PLAN (2 OF 2)

CODE ID. NO. 80091	SIZE D
SCALE: 1:300	
EFD NO. 493905	
STA. PROJ. NO. P-355	
SPEC. NO. 05-97-7041	
CONSTR. CONTR. NO. N62470-97-B-7041	
NAVFAC DRAWING NO. 4393905	
SHEET 15 OF 240	

C-13

DRAWFORM REVISION 27 JULY 98

FILENAME: 7041CR13.DWG, PLOT SCALE: 1=1, SAVED ON 04/08/99 AT 09:18, XREFS: NONE

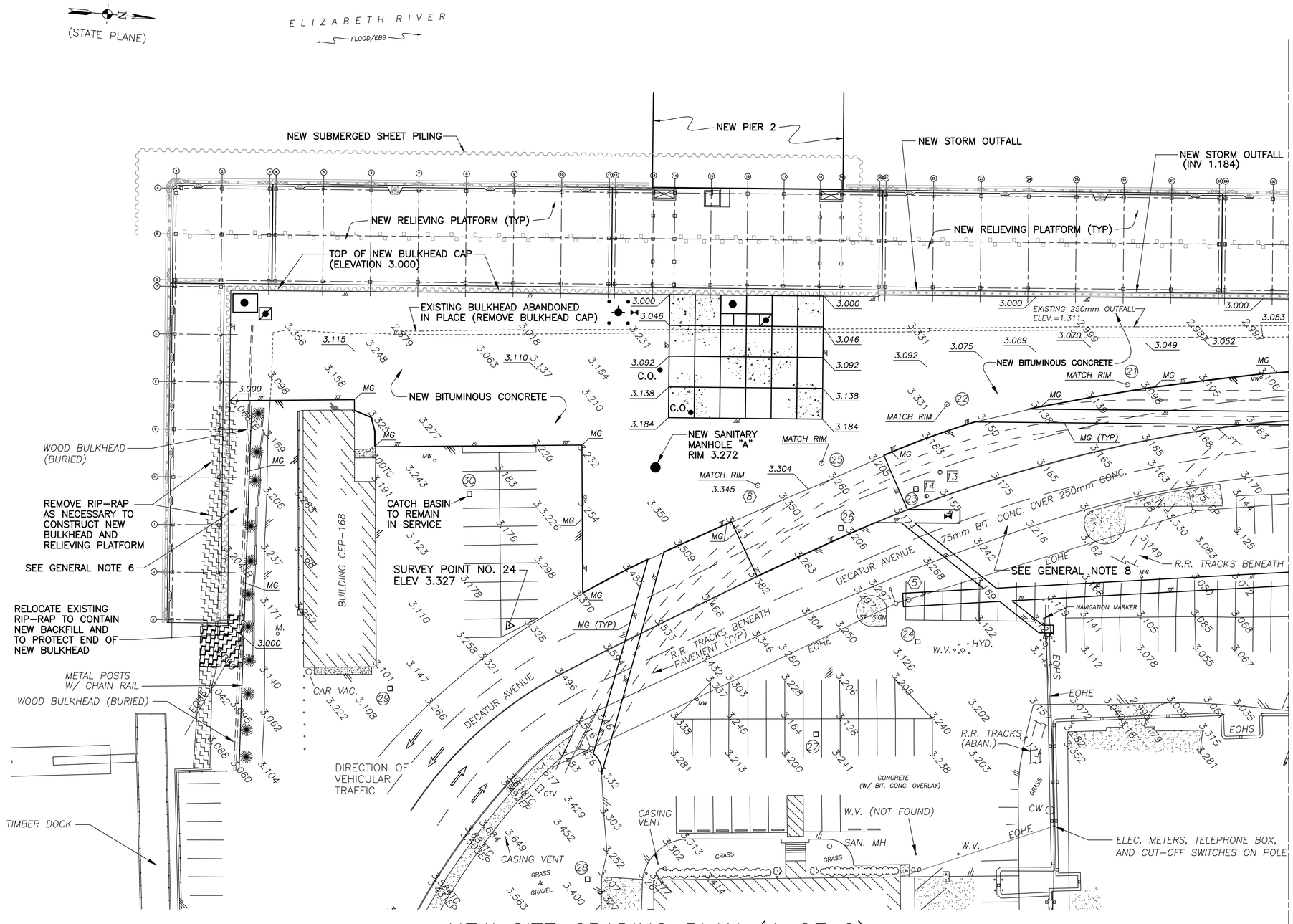

NEW SITE GRADING PLAN (1 OF 2)

1 : 300

1:300 0 5 10 20 30m

GENERAL NOTES

1. SEE SHEET C–23 FOR NEW PAVEMENT CROSS–SECTION DETAILS.
2. SEE SHEET C–16 FOR NEW CIVIL UTILITIES.
3. COORDINATE CONSTRUCTION OF NEW WATER, SANITARY, OWWO AND STORM DRAINAGE UTILITIES WITH CONSTRUCTION OF NEW MECHANICAL AND ELECTRICAL UTILITIES SHOWN ON SHEETS MU–2, EU–7 AND EU–8.
4. REMOVE ABANDONED RAILROAD TRACKS AS NECESSARY TO INSTALL NEW WORK. SEE GENERAL DEMOLITION NOTE 4(D) ON SHEET C–10 FOR BIDDING INFORMATION.
5. TOP OF NEW CLEANOUT (CO) COVERS SHALL MATCH NEW GRADE.
6. BACKFILL BETWEEN THE NEW BULKHEAD AND THE SOUTH SIDE OF BUILDING CEP–168. BACKFILL TO WITHIN 150MM OF THE TOP OF THE NEW BULKHEAD. SEED THIS AREA IN ACCORDANCE WITH THE SPECIFICATIONS.
7. THE NEW BITUMINOUS CONCRETE PAVED AREA (EXCLUDING UTILITY PATCHES) SHALL BE SLOPED FROM THE EDGE OF EXISTING PAVEMENT (THAT IS TO REMAIN) TO THE TOP OF THE NEW BULKHEAD CAP. THE NEW PAVED SURFACE SHALL NOT CONTAIN DEPRESSIONS AND LOW SPOTS.
8. REMOVE EXISTING PAVEMENT TO INSTALL WATER LINE PLUG AT TEE. BACKFILL AND PAVE. MATCH EXISTING GRADES. THIS AREA NOT SHOWN FOR CLARITY. SEE SHEET C–16 FOR LOCATION.

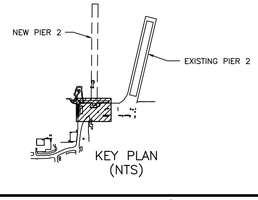

KEY PLAN (NTS)

SYM.	DESCRIPTION	DATE	APPROVED
	REVISED WIDTH OF NEW RELIEVING PLATFORM. RE-DESIGNED SITE.	3/30/99	JTH

REVISIONS

DESIGNED & ENGINEERED BY: LANTDIV NAVAL FACILITIES ENGINEERING COMMAND

SEAL

APPROVED
ACTIVITY – SATISFACTORY TO
DATE
APPROVED
FOR EFD FOR COMMANDER NAVFAC
4/08/99
DATE

A/E	EFD
DESIGN	TAR
DRAWN	TAR
REVIEW	JSC
QC	
CHIEF ARCH./ ENGR.	
PROJECT MANAGER	DWB
FIRE PROTECTION	
BRANCH MANAGER	
DESIGN DIRECTOR	

DEPARTMENT OF THE NAVY
NAVAL FACILITIES ENGINEERING COMMAND
NAVAL STATION ATLANTIC DIVISION
NORFOLK, VIRGINIA
NAVAL STATION NORFOLK, VIRGINIA

PIER 2 REPLACEMENT

NEW SITE GRADING PLAN (1 OF 2)

CODE ID. NO. 80091	SIZE D
SCALE: 1:300	
EFD NO. 493906	
STA. PROJ. NO. P–355	
SPEC. NO. 05–97–7041	
CONSTR. CONTR. NO. N62470–97–B–7041	
NAVFAC DRAWING NO. 4393906	
SHEET 16 OF 240	

C–14

DRAWFORM REVISION 27 JULY 98

FILENAME: 7041CR14.DWG, PLOT SCALE: 1=1, SAVED ON 04/08/99 AT 09:23, XREFS: NONE

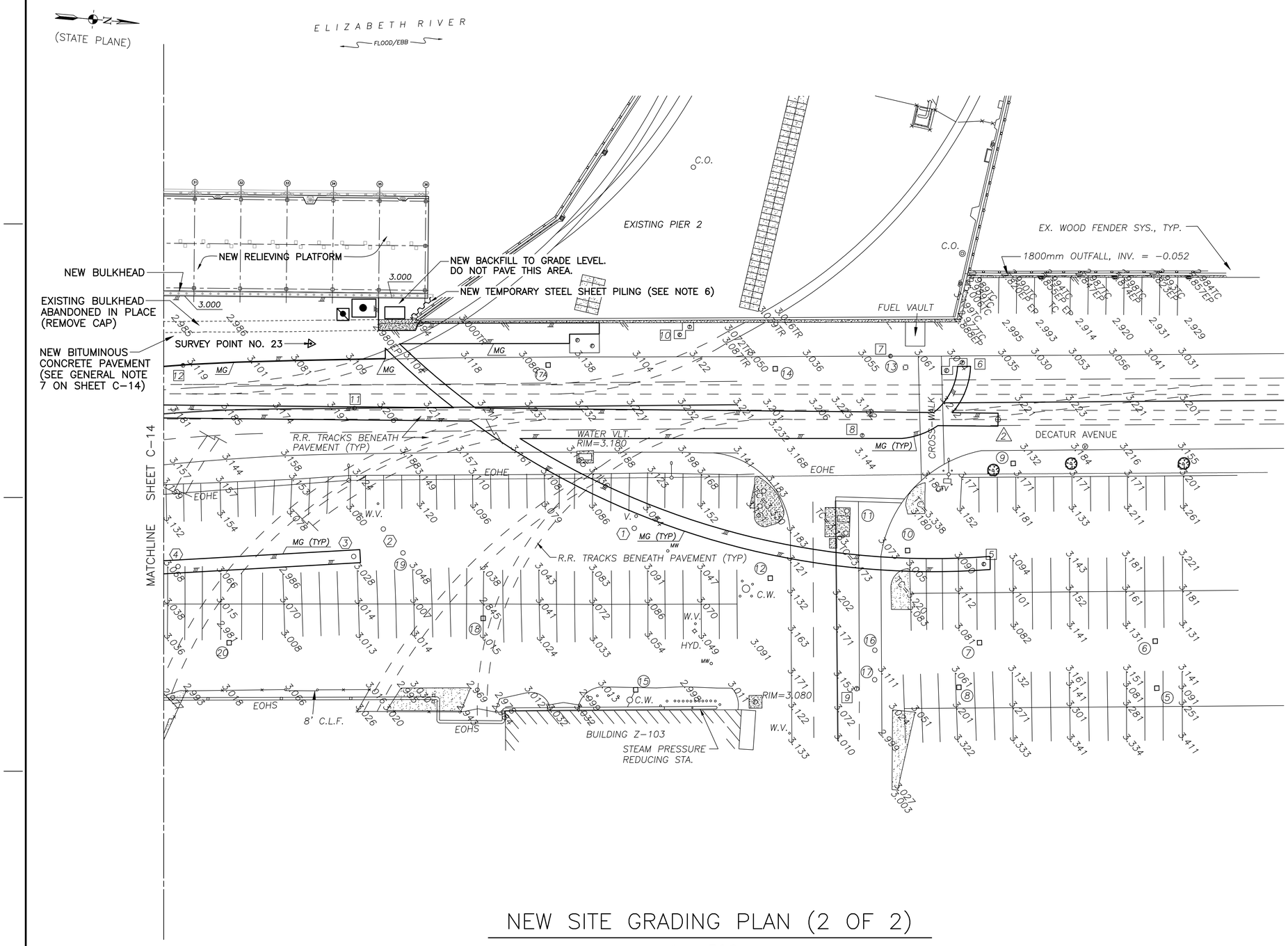

NEW SITE GRADING PLAN (2 OF 2)

1 : 300

1:300 0 5 10 20 30m

GENERAL NOTES

1. SEE SHEET C-23 FOR NEW PAVEMENT CROSS-SECTION DETAILS.
2. SEE SHEET C-17 FOR NEW CIVIL UTILITIES.
3. COORDINATE CONSTRUCTION OF NEW WATER, SANITARY, OWWO AND STORM DRAINAGE UTILITIES WITH CONSTRUCTION OF NEW MECHANICAL AND ELECTRICAL UTILITIES SHOWN ON SHEETS MU-2, EU-7 AND EU-8.
4. SEE SHEET C-13 FOR SURVEY POINT NO. 23 DATA.
5. NEW ELECTRICAL MANHOLES AND SWITCH ARE NOT SHOWN ON THIS SHEET FOR CLARITY. SEE SHEETS C-13 AND EU-8 FOR NEW ELECTRICAL WORK.
6. THE TOP OF THE NEW TEMPORARY SHEET PILING SHALL MATCH THE TOP OF THE NEW BULKHEAD AND THE TOP OF THE EXISTING BULKHEAD (THAT IS TO REMAIN). REMOVE TIMBER FENDERS FROM THE SIDE OF EXISTING PIER 2 AS NECESSARY TO DRIVE THE NEW STEEL SHEET PILES.

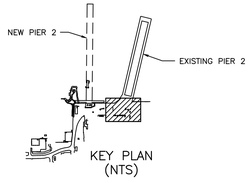

KEY PLAN (NTS)

SYM.	DESCRIPTION	DATE	APPROVED
	REVISED WIDTH OF NEW RELIEVING PLATFORM. RE-DESIGNED SITE.	3/30/99	JTH

REVISIONS

DESIGNED & ENGINEERED BY: LANTDIV NAVAL FACILITIES ENGINEERING COMMAND

SEAL

APPROVED

ACTIVITY - SATISFACTORY TO

DATE

APPROVED FOR EFD FOR COMMANDER NAVFAC 4/08/99

DATE

A/E	EFD
DESIGN	TAR
DRAWN	TAR
REVIEW	JSC
QC	
CHIEF ARCH./ ENGR.	
PROJECT MANAGER	DWB
FIRE PROTECTION	
BRANCH MANAGER	
DESIGN DIRECTOR	

DEPARTMENT OF THE NAVY
NAVAL FACILITIES ENGINEERING COMMAND
ATLANTIC DIVISION
NORFOLK, VIRGINIA
NAVAL STATION
NORFOLK, VIRGINIA

PIER 2 REPLACEMENT

NEW SITE GRADING PLAN (2 OF 2)

CODE ID. NO. 80091	SIZE D
SCALE: 1:300	
EFD NO. 49.3907	
STA. PROJ. NO. P-355	
SPEC. NO. 05-97-7041	
CONSTR. CONTR. NO. N62470-97-B-7041	
NAVFAC DRAWING NO. 4393907	
SHEET 17 OF 240	

C-15

DRAWFORM REVISION 27 JULY 96

FILENAME: 7041CR15.DWG, PLOT SCALE: 1=1, SAVED ON 04/08/99 AT 09:25, XREFS: NONE

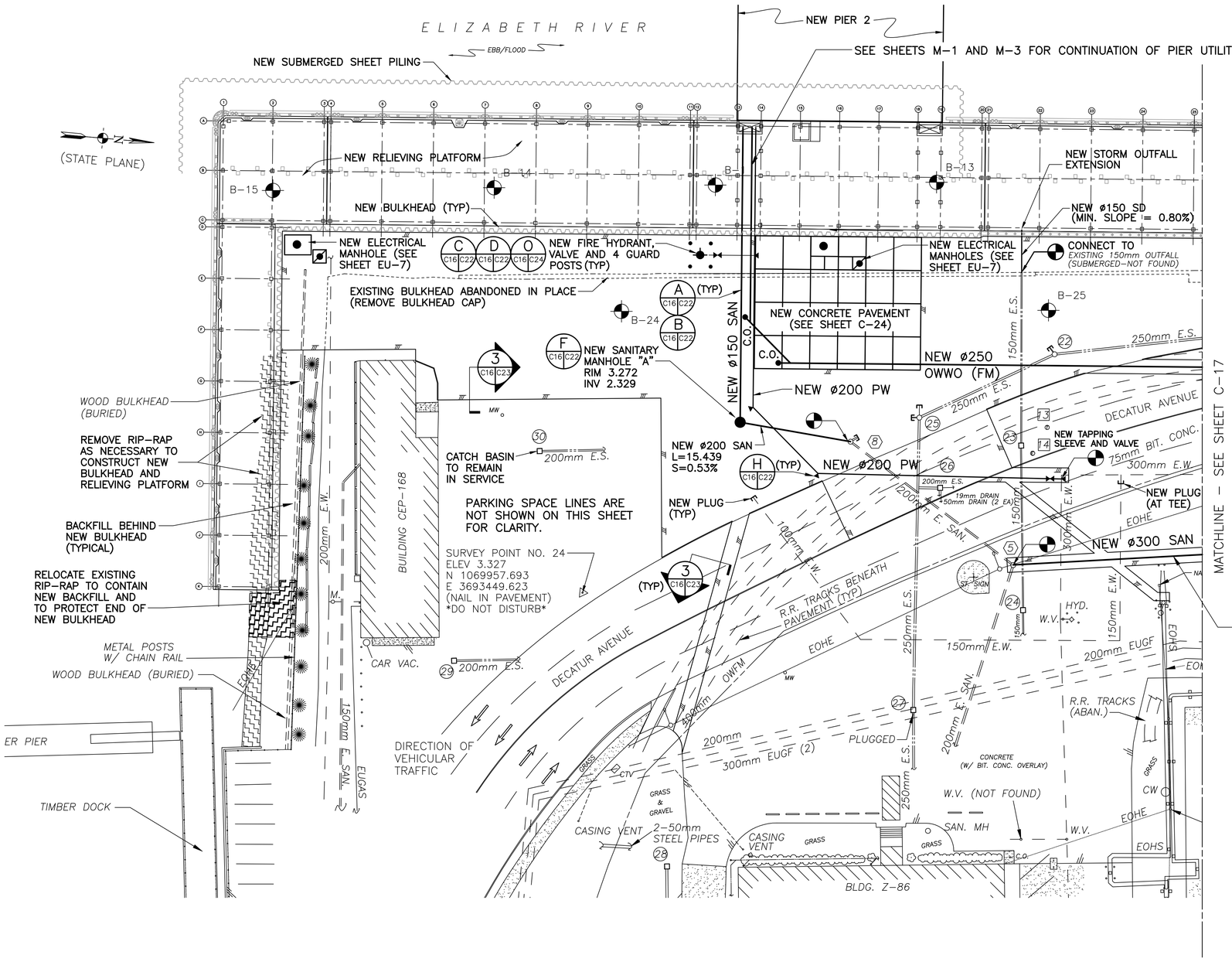

NEW SITE UTILITY PLAN (1 OF 2)

1 : 300

1:300 0 5 10 20 30m

GENERAL NOTES

1. REMOVE EXISTING PAVEMENT TO INSTALL NEW UNDERGROUND UTILITIES. SEE SHEET C-10 FOR DESCRIPTION OF EXISTING PAVEMENT THICKNESS. SEE DETAILS ON SHEET C-23 FOR NEW PAVEMENT PATCH DETAILS.
2. GROUNDWATER WILL BE ENCOUNTERED DURING CONSTRUCTION OF NEW UTILITIES. SEE THE BORING LOGS ON SHEETS B-1 THROUGH B-11 FOR APPROXIMATE GROUNDWATER ELEVATIONS. THE CONTRACTOR IS ADVISED THAT SINCE THE NEW WORK AREAS ARE WITHIN 42 METERS OF THE EXISTING BULKHEAD, EXTENSIVE DEWATERING WILL BE REQUIRED BELOW ACTUAL GROUND WATER AND TIDE ELEVATION. REFER TO THE SPECEFICATIONS FOR SPECFIC DEWATERING REQUIREMENTS.
3. SEE DETAILS A/C16-C22 AND B/C16-C22 FOR TRENCH AND PIPE BEDDING REQUIREMENTS.
4. NEW MANHOLES AND CONNECTIONS TO EXISTING MANHOLES ARE TO BE CONSTRUCTED TO PREVENT GROUNDWATER INFILTRATION.
5. SEE SHEETS C-25 AND C-26 FOR NEW UTILITY PROFILES.
6. INVERTS OF THE NEW ø250 SAN SHALL MATCH EXISTING INVERTS AT MANHOLES ⑤, ④, AND ③.
7. THE NEW ø150 AND ø200 SANITARY PIPE FROM THE NEW PIER 2 TO EXISTING MANHOLE ⑧ SHALL BE DUCTILE IRON PIPE.

REMOVE EXISTING ø250 SANITARY SEWER PIPE BETWEEN SANITARY MANHOLES ⑤ AND ④, AND BETWEEN ④ AND ③. INSTALL NEW ø300 SANITARY SEWER PIPE BETWEEN THESE MANHOLES. PROVIDE TEMPORARY SEWAGE BYPASS PUMPS AND HOSES BETWEEN SANITARY MANHOLES ⑤, ④, AND ③.

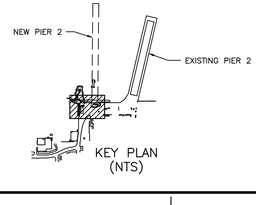

SYM.	DESCRIPTION	DATE	APPROVED
	REVISED WIDTH OF NEW RELIEVING PLATFORM. RE-DESIGNED SITE.	3/30/99	JTH

REVISIONS

DESIGNED & ENGINEERED BY: LANTDIV NAVAL FACILITIES ENGINEERING COMMAND

SEAL

APPROVED

ACTIVITY - SATISFACTORY TO

DATE

APPROVED

FOR EFD FOR COMMANDER NAVFAC

4/08/99

DATE

A/E	EFD
DESIGN	TAR
DRAWN	TAR
REVIEW	JSC
QC	
CHIEF ARCH./ ENGR.	
PROJECT MANAGER	DWB
FIRE PROTECTION	
BRANCH MANAGER	
DESIGN DIRECTOR	

DEPARTMENT OF THE NAVY — NAVAL FACILITIES ENGINEERING COMMAND

NAVAL STATION — ATLANTIC DIVISION

NAVAL STATION — NORFOLK, VIRGINIA

PIER 2 REPLACEMENT

NEW SITE UTILITY PLAN (1 OF 2)

CODE ID. NO. 80091 | SIZE D

SCALE: 1:300

EFD NO. 493908

STA. PROJ. NO. P-355

SPEC. NO. 05-97-7041

CONSTR. CONTR. NO. N62470-97-B-7041

NAVFAC DRAWING NO. 4393908

SHEET 18 OF 240

C-16

DRAWFORM REVISION 27 JULY 98

FILENAME: 7041CR16.DWG, PLOT SCALE: 1=1, SAVED ON 04/08/99 AT 09:31, XREFS: NONE

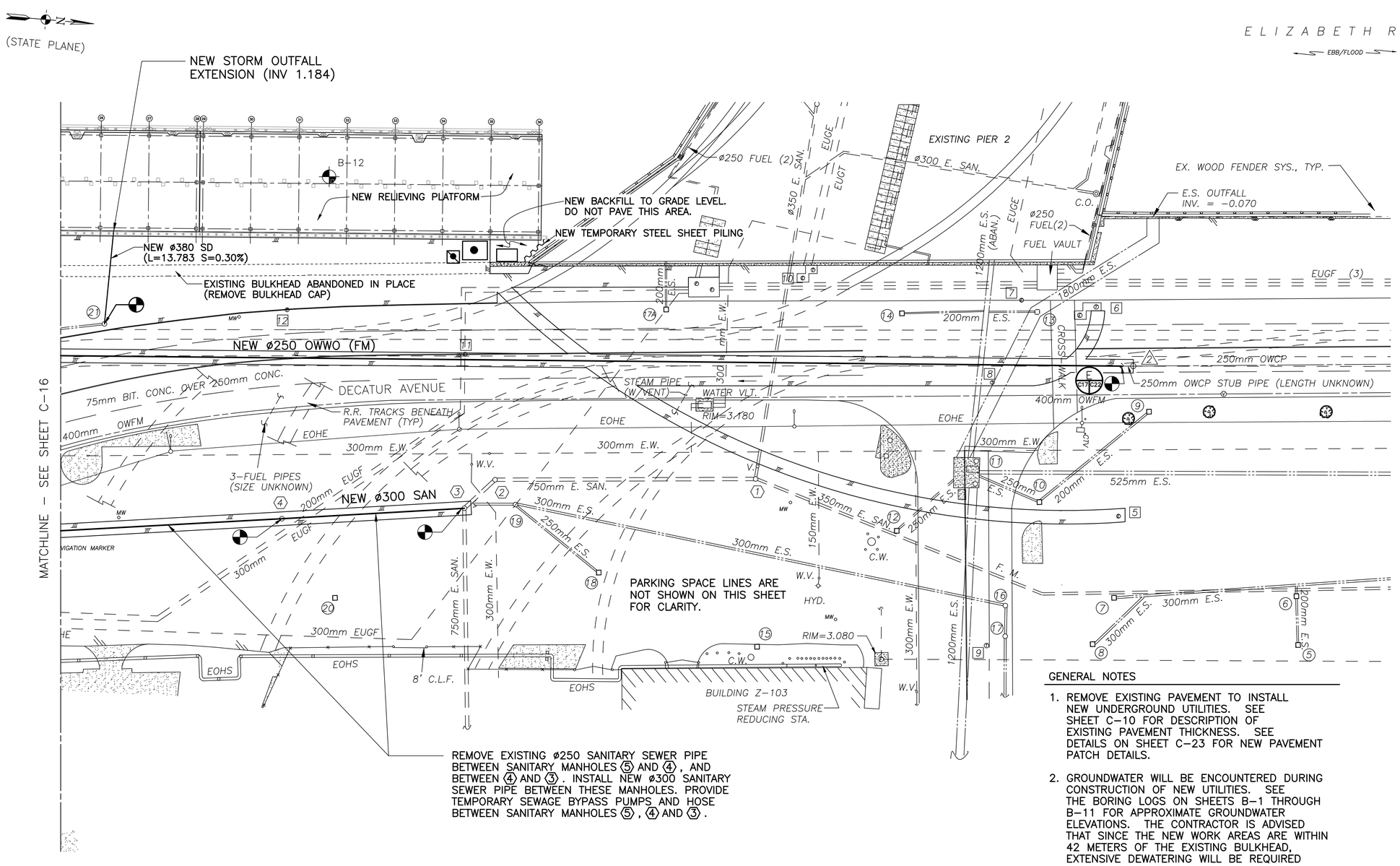

NEW SITE UTILITY PLAN (2 OF 2)

1 : 300

1:300 0 5 10 20 30m

GENERAL NOTES

1. REMOVE EXISTING PAVEMENT TO INSTALL NEW UNDERGROUND UTILITIES. SEE SHEET C-10 FOR DESCRIPTION OF EXISTING PAVEMENT THICKNESS. SEE DETAILS ON SHEET C-23 FOR NEW PAVEMENT PATCH DETAILS.
2. GROUNDWATER WILL BE ENCOUNTERED DURING CONSTRUCTION OF NEW UTILITIES. SEE THE BORING LOGS ON SHEETS B-1 THROUGH B-11 FOR APPROXIMATE GROUNDWATER ELEVATIONS. THE CONTRACTOR IS ADVISED THAT SINCE THE NEW WORK AREAS ARE WITHIN 42 METERS OF THE EXISTING BULKHEAD, EXTENSIVE DEWATERING WILL BE REQUIRED BELOW ACTUAL GROUND WATER AND TIDE ELEVATION. REFER TO THE SPECEFICATIONS FOR SPECFIC DEWATERING REQUIREMENTS.
3. SEE DETAILS A/C16-C22 AND B/C16-C22 FOR TRENCH AND PIPE BEDDING REQUIREMENTS.
4. NEW MANHOLES AND CONNECTIONS TO EXISTING MANHOLES ARE TO BE CONSTRUCTED TO PREVENT GROUNDWATER INFILTRATION.
5. SEE SHEETS C-25 AND C-26 FOR NEW UTILITY PROFILES.
6. INVERTS OF THE NEW ø250 SAN SHALL MATCH EXISTING INVERTS AT MANHOLES 5, 4, AND 3.

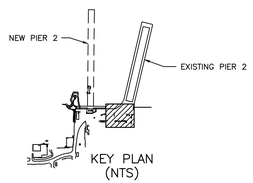

SYM.	DESCRIPTION	DATE	APPROVED
	REVISED WIDTH OF NEW RELIEVING PLATFORM. RE-DESIGNED SITE.	3/30/99	JTH

REVISIONS

DESIGNED & ENGINEERED BY: LANTDIV NAVAL FACILITIES ENGINEERING COMMAND

SEAL

APPROVED
ACTIVITY - SATISFACTORY TO
DATE
APPROVED
FOR EFD FOR COMMANDER NAVFAC
4/08/99
DATE

A/E	EFD
DESIGN	TAR
DRAWN	TAR
REVIEW	JSC
QC	
CHIEF ARCH./ ENGR.	
PROJECT MANAGER	DWB
FIRE PROTECTION	
BRANCH MANAGER	
DESIGN DIRECTOR	

DEPARTMENT OF THE NAVY
NAVAL FACILITIES ENGINEERING COMMAND
ATLANTIC DIVISION
NAVAL STATION NORFOLK, VIRGINIA
NAVAL STATION NORFOLK, VIRGINIA
PIER 2 REPLACEMENT
NEW SITE UTILITY PLAN (2 OF 2)

CODE ID. NO. 80091	SIZE D
SCALE:	1:300
EFD NO.	493909
STA. PROJ. NO.	P-355
SPEC. NO.	05-97-7041
CONSTR. CONTR. NO.	N62470-97-B-7041
NAVFAC DRAWING NO.	439309
SHEET	19 OF 240

C-17

FILENAME: 7041CR17.DWG, PLOT SCALE: 1=1, SAVED ON 04/08/99 AT 09:38, XREFS: NONE

DRAWFORM REVISION 27 JULY 98

EJ = EXPANSION JOINT (SEE DETAIL "J"–C24/C23)
TE = THICKENED EDGE (SEE DETAIL "I"–C24/C23)
TCJ = TRANSVERSE CONTRACTION JOINT (SEE DETAIL "K"–C24/C23)
LKJ = LONGITUDINAL CONSTRUCTION JOINT (SEE DETAIL "L"–C24/C23)
LCJ = LONGITUDINAL CONTRACTION JOINT (SEE DETAIL "K"–C24/C23)

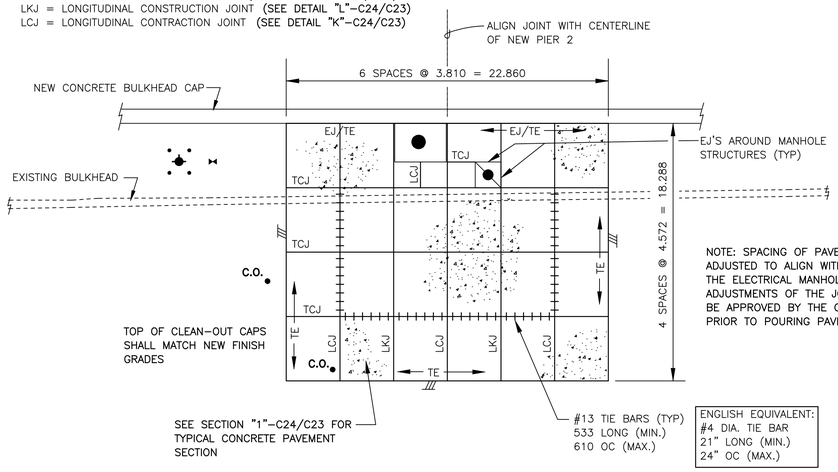

NOTE: SPACING OF PAVEMENT JOINTS MAY BE ADJUSTED TO ALIGN WITH THE SIDES OF THE ELECTRICAL MANHOLE STRUCTURES. ADJUSTMENTS OF THE JOINT LAYOUT SHALL BE APPROVED BY THE CONTRACTING OFFICER PRIOR TO POURING PAVEMENT CONCRETE.

NEW CONCRETE PAVEMENT – JOINT PLAN

SCALE: 1 : 200

NOTES

1. MINIMUM DISTANCE FROM THE CORNER EDGE OF A CONCRETE SLAB TO A TIE BAR SHALL BE 305MM.
2. THE SIDES OF ALL SLABS THAT ARE WITHIN ONE (1) METER OF A MANHOLE STRUCTURE SHALL HAVE A THICKENED EDGE.

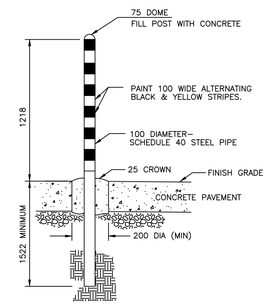

O
C16 C24
GUARD POST

NOT TO SCALE

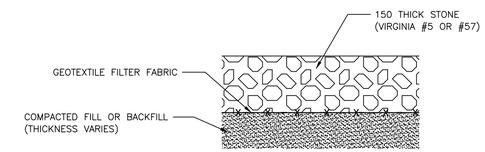

P
C19 C24
NEW GRAVEL SURFACE AT ELECTRICAL SUBSTATION

NOT TO SCALE

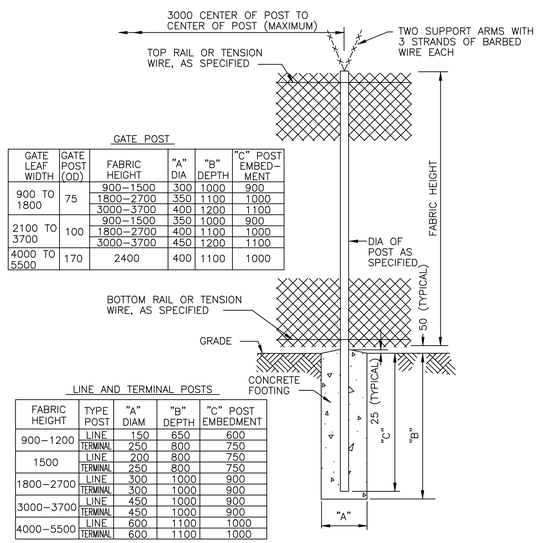

GATE POST

GATE LEAF WIDTH	GATE POST (OD)	FABRIC HEIGHT	"A" DIA	"B" DEPTH	"C" POST EMBED-MENT
900 TO 1800	75	900–1500	300	1000	900
		1800–2700	350	1100	1000
		3000–3700	400	1200	1100
2100 TO 3700	100	900–1500	350	1000	900
		1800–2700	400	1100	1000
		3000–3700	450	1200	1100
4000 TO 5500	170	2400	400	1100	1000

LINE AND TERMINAL POSTS

FABRIC HEIGHT	TYPE POST	"A" DIAM	"B" DEPTH	"C" POST EMBEDMENT
900–1200	LINE	150	650	600
	TERMINAL	250	800	750
1500	LINE	200	800	750
	TERMINAL	250	800	750
1800–2700	LINE	300	1000	900
	TERMINAL	300	1000	900
3000–3700	LINE	450	1000	900
	TERMINAL	450	1000	900
4000–5500	LINE	600	1100	1000
	TERMINAL	600	1100	1000

NOTE: TERMINAL POSTS INCLUDE END, CORNER, AND PULL POSTS

N
C19 C24
CHAIN LINK FENCE

NOT TO SCALE

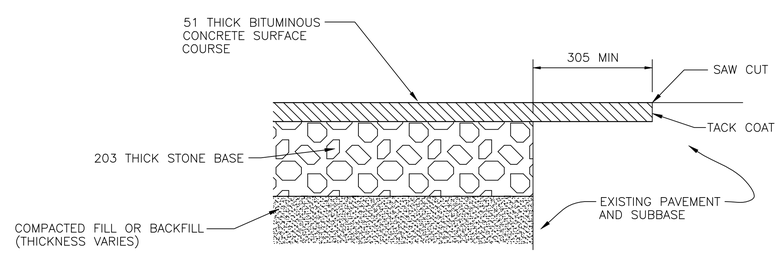

4
C19 C24
NEW BITUMINOUS CONCRETE PAVEMENT SECTION AT ELECTRICAL SUBSTATION

NOT TO SCALE

GRAPHIC SCALES

1:200 0 5 10 15 20m

SYM.	DESCRIPTION	DATE	APPROVED
	REVISED NEW CONCRETE PAVEMENT – JOINT PLAN	3/30/99	JTH

REVISIONS

DESIGNED & ENGINEERED BY: LANTDIV NAVAL FACILITIES ENGINEERING COMMAND

SEAL

APPROVED
ACTIVITY – SATISFACTORY TO
DATE
APPROVED
FOR EFD FOR COMMANDER NAVFAC
4/08/99
DATE

A/E	EFD
DESIGN	TAR
DRAWN	TAR
REVIEW	JSC
QC	
CHIEF ARCH./ ENGR.	
PROJECT MANAGER	DWB
FIRE PROTECTION BRANCH MANAGER	
DESIGN DIRECTOR	

DEPARTMENT OF THE NAVY
NAVAL FACILITIES ENGINEERING COMMAND
NAVAL STATION ATLANTIC DIVISION
NORFOLK, VIRGINIA
NAVAL STATION NORFOLK, VIRGINIA
PIER 2 REPLACEMENT
MISCELLANEOUS DETAILS

CODE ID. NO. 80091 | SIZE D
SCALE: GRAPHIC
EFD NO. 493916
STA. PROJ. NO. P–355
SPEC. NO. 05–97–7041
CONSTR. CONTR. NO. N62470–97–B–7041
NAVFAC DRAWING NO. 4393916
SHEET 26 OF 240
C–24

DRAWFORM REVISION 27 JULY 98

FILENAME: 7041CR24.DWG, PLOT SCALE: 1=1, SAVED ON 04/08/99 AT 09:41, XREFS: NONE

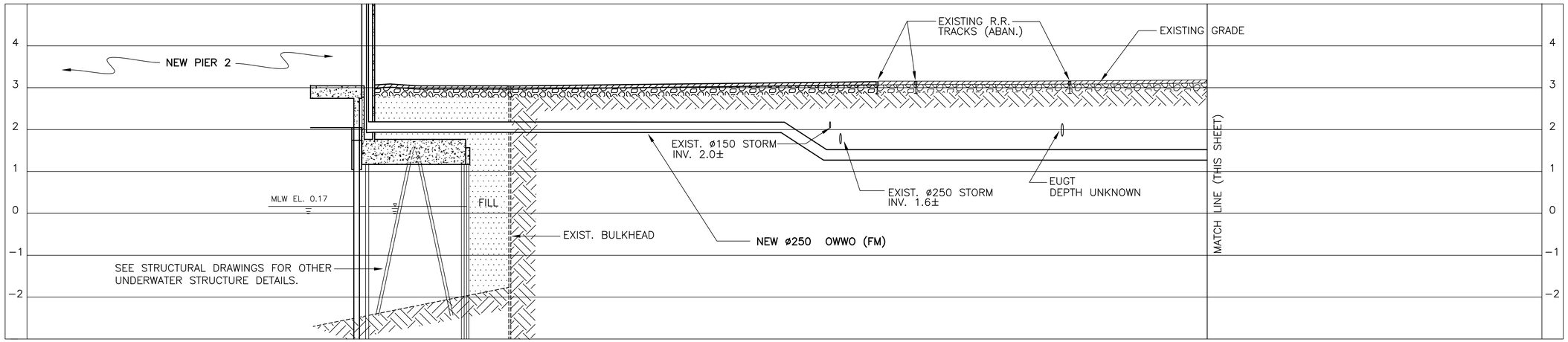

OILY WASTE/WASTE OIL (OWWO) PROFILE

HORIZ. SCALE: 1 : 300
VERT. SCALE: 1 : 50

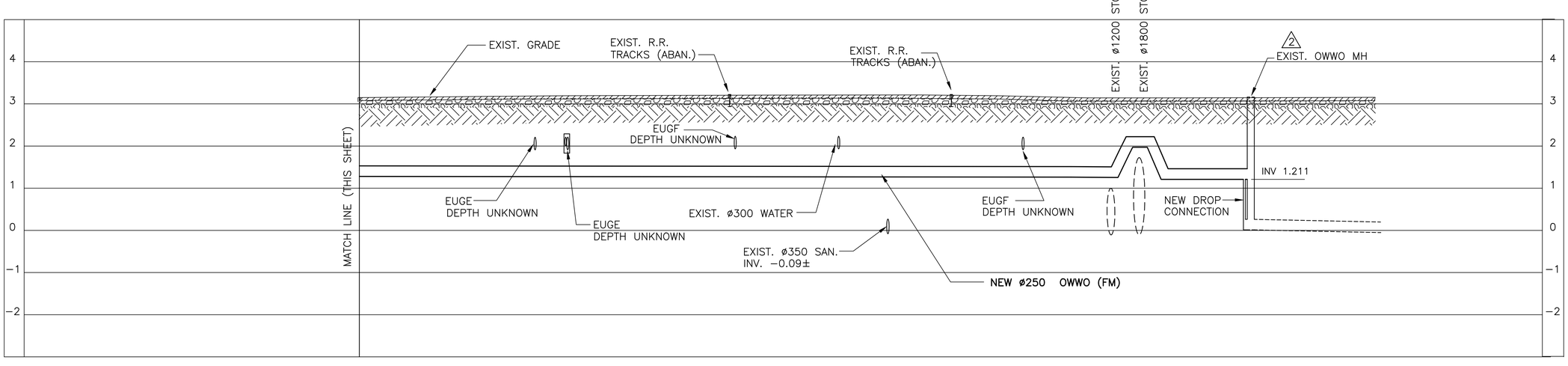

OILY WASTE/WASTE OIL (OWWO) PROFILE

HORIZ. SCALE: 1 : 300
VERT. SCALE: 1 : 50

GRAPHIC SCALES

1:300 — 0 5 10 20 30m

1:50 — 0 1 2 3 4 5m

REVISIONS			
SYM.	DESCRIPTION	DATE	APPROVED
	REVISED WIDTH OF RELIEVING PLATFORM	3/30/99	JTH

DESIGNED & ENGINEERED BY: LANTDIV NAVAL FACILITIES ENGINEERING COMMAND

SEAL

APPROVED
ACTIVITY – SATISFACTORY TO
DATE
APPROVED
FOR EFD FOR COMMANDER NAVFAC
4/08/99
DATE

A/E	EFD
DESIGN	TAR
DRAWN	TAR
REVIEW	JSC
QC	
CHIEF ARCH./ ENGR.	
PROJECT MANAGER	DWB
FIRE PROTECTION BRANCH MANAGER	
DESIGN DIRECTOR	

DEPARTMENT OF THE NAVY
NAVAL STATION
NAVAL FACILITIES ENGINEERING COMMAND
ATLANTIC DIVISION
NORFOLK, VIRGINIA
NAVAL STATION NORFOLK, VIRGINIA
PIER 2 REPLACEMENT
OILY WASTE/WASTE OIL (OWWO) PROFILE

CODE ID. NO. 80091 | SIZE D
SCALE: GRAPHIC
EFD NO. 493917
STA. PROJ. NO. P-355
SPEC. NO. 05-97-7041
CONSTR. CONTR. NO. N62470-97-B-7041
NAVFAC DRAWING NO. 4393917
SHEET 27 OF 240
C-25

FILENAME: 7041CR25.DWG, PLOT SCALE: 1" = 1", SAVED ON 04/08/99 AT 09:42, XREFS: NONE

DRAWFORM REVISION 27 JULY 98

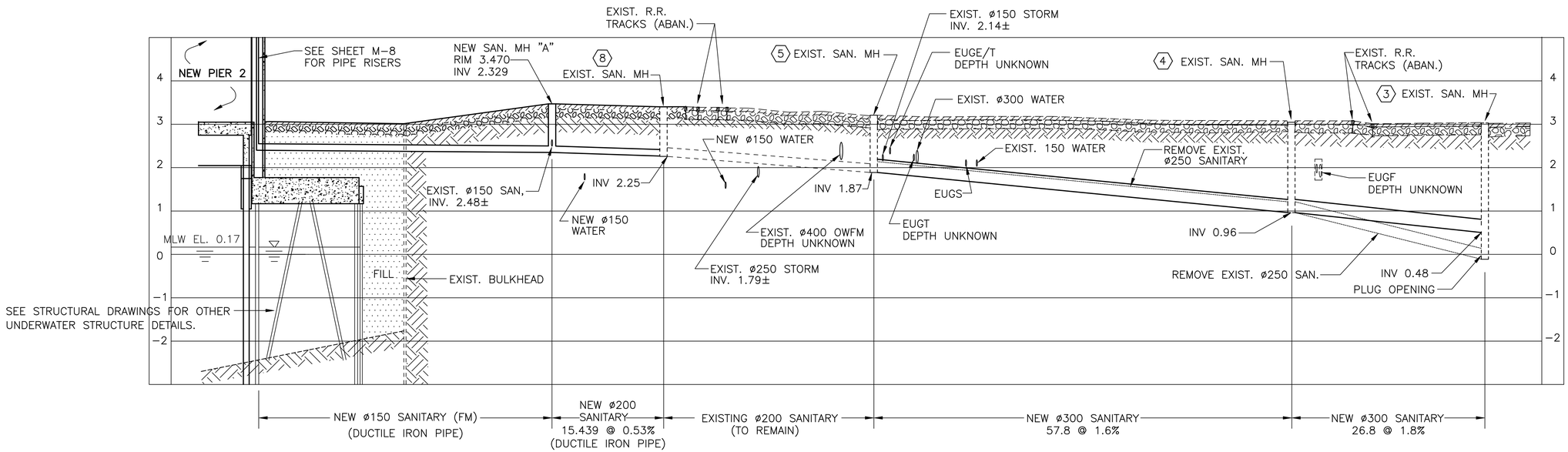

SANITARY (SAN) PROFILE

HORIZ. SCALE: 1 : 300
VERT. SCALE: 1 : 50

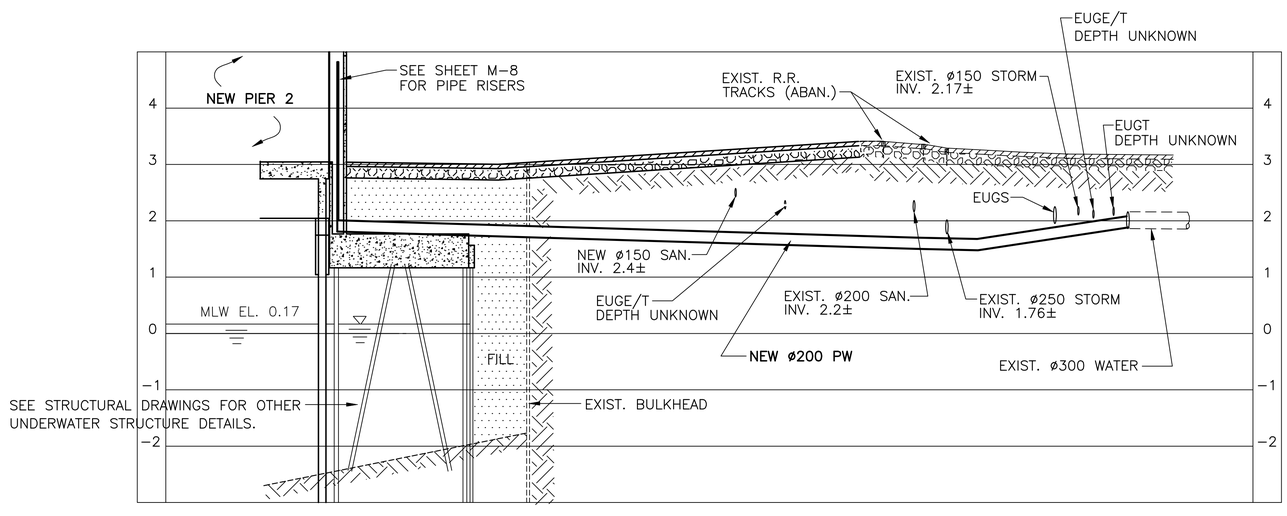

POTABLE WATER (PW) PROFILE

HORIZ. SCALE: 1 : 300
VERT. SCALE: 1 : 50

GRAPHIC SCALES

1:300 0 5 10 20 30m

1:50 0 1 2 3 4 5m

REVISIONS				
SYM.	DESCRIPTION	DATE	APPROVED	
	REVISED WIDTH OF RELIEVING PLATFORM	3/30/99	JTH	

DESIGNED & ENGINEERED BY: LANTDIV NAVAL FACILITIES ENGINEERING COMMAND

SEAL

APPROVED

ACTIVITY – SATISFACTORY TO

DATE

APPROVED

FOR EFD FOR COMMANDER NAVFAC

4/08/99

DATE

A/E	EFD
DESIGN	TAR
DRAWN	TAR
REVIEW	JSC
QC	
CHIEF ARCH./ ENGR.	
PROJECT MANAGER	DWB
FIRE PROTECTION	
BRANCH MANAGER	
DESIGN DIRECTOR	

DEPARTMENT OF THE NAVY — NAVAL FACILITIES ENGINEERING COMMAND

NAVAL STATION — ATLANTIC DIVISION

NAVAL STATION NORFOLK, VIRGINIA

PIER 2 REPLACEMENT

NORFOLK, VIRGINIA

SANITARY (SAN) AND POTABLE WATER (PW) PROFILES

CODE ID. NO. 80091 | SIZE D

SCALE: GRAPHIC

EFD NO. 493918

STA. PROJ. NO. P-355

SPEC. NO. 05-97-7041

CONSTR. CONTR. NO. N62470-97-B-7041

NAVFAC DRAWING NO. 4393918

SHEET 28 OF 240

C-26

FILENAME: 7041CR26.DWG, PLOT SCALE: 1" = 1", SAVED ON 04/08/99 AT 09:43, XREFS: NONE

DRAWFORM REVISION 27 JULY 98

SEE SHEET C-28 FOR CONTINUATION

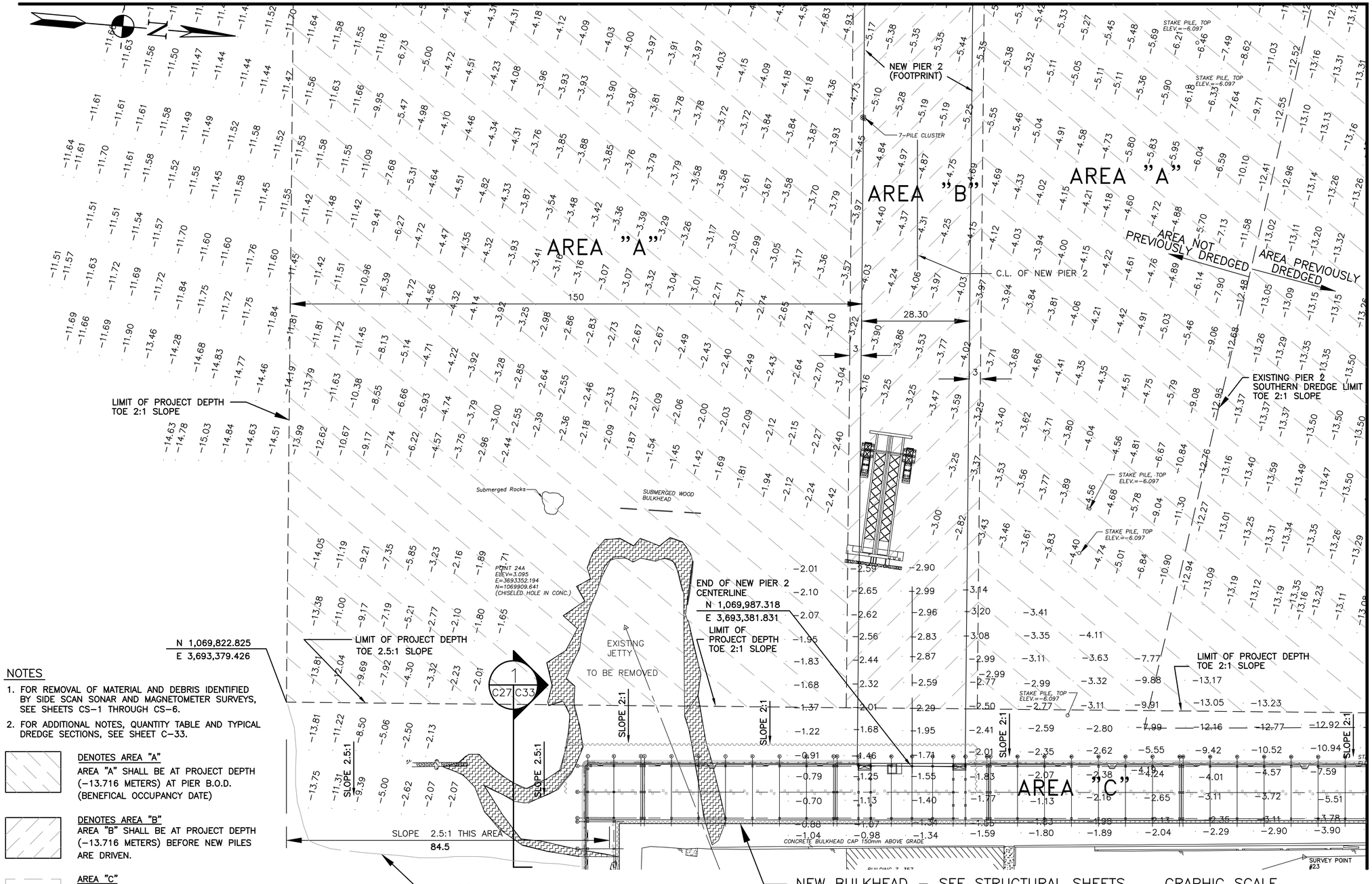

SEE SHEET C-30 FOR CONTINUATION

NOTES

1. FOR REMOVAL OF MATERIAL AND DEBRIS IDENTIFIED BY SIDE SCAN SONAR AND MAGNETOMETER SURVEYS, SEE SHEETS CS-1 THROUGH CS-6.
2. FOR ADDITIONAL NOTES, QUANTITY TABLE AND TYPICAL DREDGE SECTIONS, SEE SHEET C-33.

DENOTES AREA "A"
AREA "A" SHALL BE AT PROJECT DEPTH (-13.716 METERS) AT PIER B.O.D. (BENEFICAL OCCUPANCY DATE)

DENOTES AREA "B"
AREA "B" SHALL BE AT PROJECT DEPTH (-13.716 METERS) BEFORE NEW PILES ARE DRIVEN.

AREA "C"
AREA "C" SHALL BE DREDGED AS SHOWN ON THIS SHEET, C-30, C-38 AND SE-4 BEFORE NEW PILES ARE DRIVEN AND NEW BULKHEAD IS CONSTRUCTED.

REVISIONS

SYM.	DESCRIPTION	DATE	APPROVED

DESIGNED & ENGINEERED BY: LANTDIV NAVAL FACILITIES ENGINEERING COMMAND

SEAL

APPROVED
ACTIVITY – SATISFACTORY TO
DATE
APPROVED
FOR EFD FOR COMMANDER NAVFAC
4/08/99
DATE

A/E	EFD
DESIGN	PES
DRAWN	PES
REVIEW	
QC	
CHIEF ARCH./ ENGR.	
PROJECT MANAGER	DWB
FIRE PROTECTION	
BRANCH MANAGER	
DESIGN DIRECTOR	

DEPARTMENT OF THE NAVY
NAVAL FACILITIES ENGINEERING COMMAND
ATLANTIC DIVISION
NORFOLK, VIRGINIA
NAVAL STATION
NORFOLK, VA.

PIER 2 REPLACEMENT

DREDGING PLAN

CODE ID. NO. 80091	SIZE D
SCALE:	1:500
EFD NO.	493919
STA. PROJ. NO.	P-355
SPEC. NO.	05-97-7041
CONSTR. CONTR. NO.	N62470-97-B-7041
NAVFAC DRAWING NO.	4393919
SHEET 29 OF 240	

C-27

DRAWFORM REVISION 27 JULY 98

FILENAME: 7041C027.DWG, PLOT SCALE: 1=1, SAVED ON 01/08/99 AT 09:45, XREFS: 7041CX02.DWG

SEE SHEET C-31 FOR CONTINUATION

SEE SHEET C-27 FOR CONTINUATION

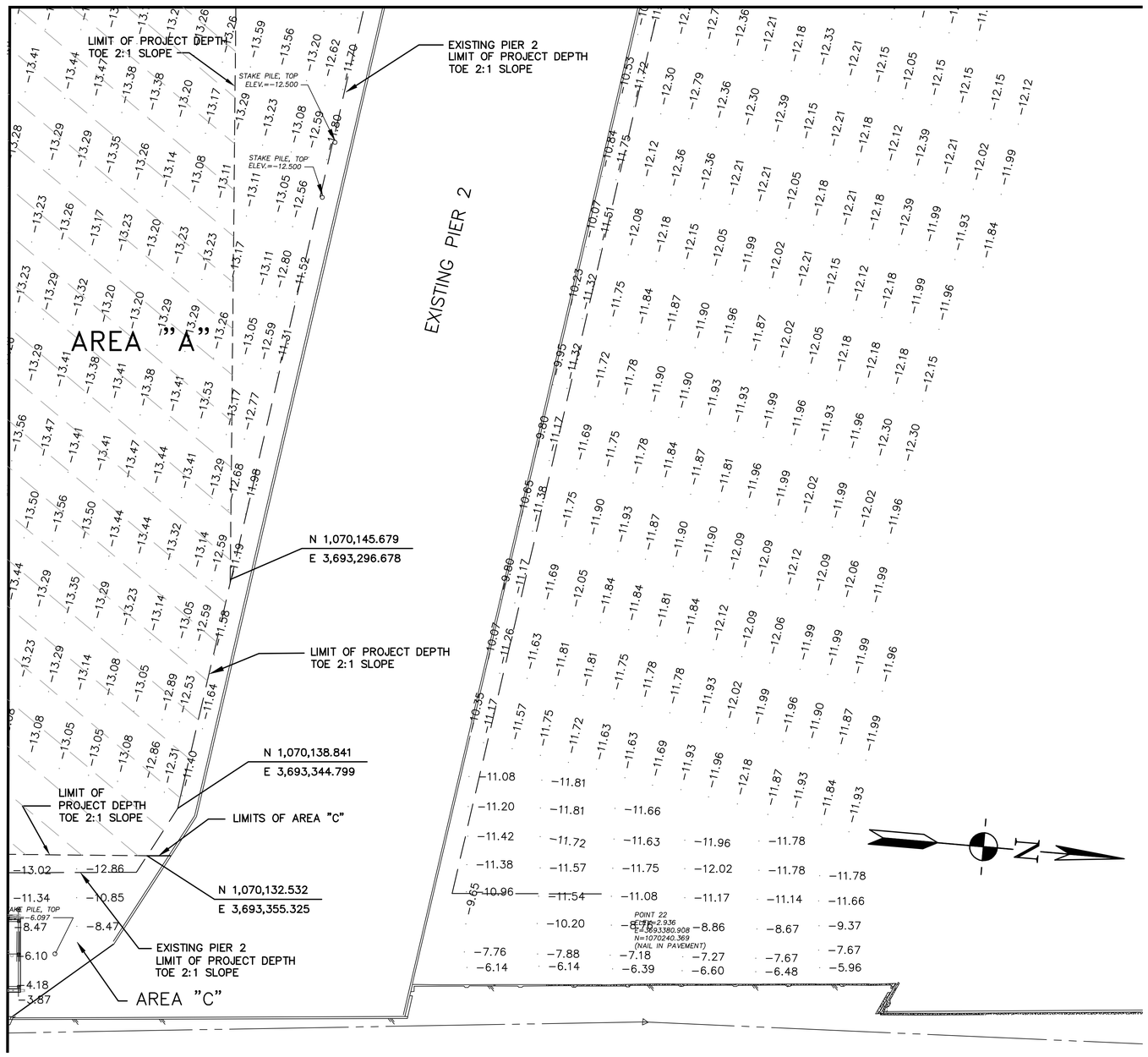

GRAPHIC SCALE

1:500 0 10 20 30 40 50m

REVISIONS			
SYM.	DESCRIPTION	DATE	APPROVED

DESIGNED & ENGINEERED BY: LANTDIV NAVAL FACILITIES ENGINEERING COMMAND

SEAL

APPROVED

ACTIVITY – SATISFACTORY TO

DATE

APPROVED

FOR EFD FOR COMMANDER, NAVFAC

4/08/99

DATE

	A/E	EFD
DESIGN		PES
DRAWN		PES
REVIEW		
QC		
CHIEF ARCH./ ENGR.		
PROJECT MANAGER		DWB
FIRE PROTECTION		
BRANCH MANAGER		
DESIGN DIRECTOR		

DEPARTMENT OF THE NAVY
NAVAL FACILITIES ENGINEERING COMMAND
ATLANTIC DIVISION
NAVAL STATION
NORFOLK, VIRGINIA
NAVAL STATION NORFOLK, VA.
PIER 2 REPLACEMENT
DREDGING PLAN

CODE ID. NO. 80091 SIZE D

SCALE: 1:500

EFD NO. 493922

STA. PROJ. NO. P-355

SPEC. NO. 05-97-7041

CONSTR. CONTR. NO. N62470-97-B-7041

NAVFAC DRAWING NO. 4393922

SHEET 32 OF 240

C-30

FILENAME: 7041C030.DWG, PLOT SCALE: 1=1, SAVED ON 01/07/99 AT 15:25, XREFS: 7041CX02.DWG

DRAWFORM REVISION 27 JULY 98

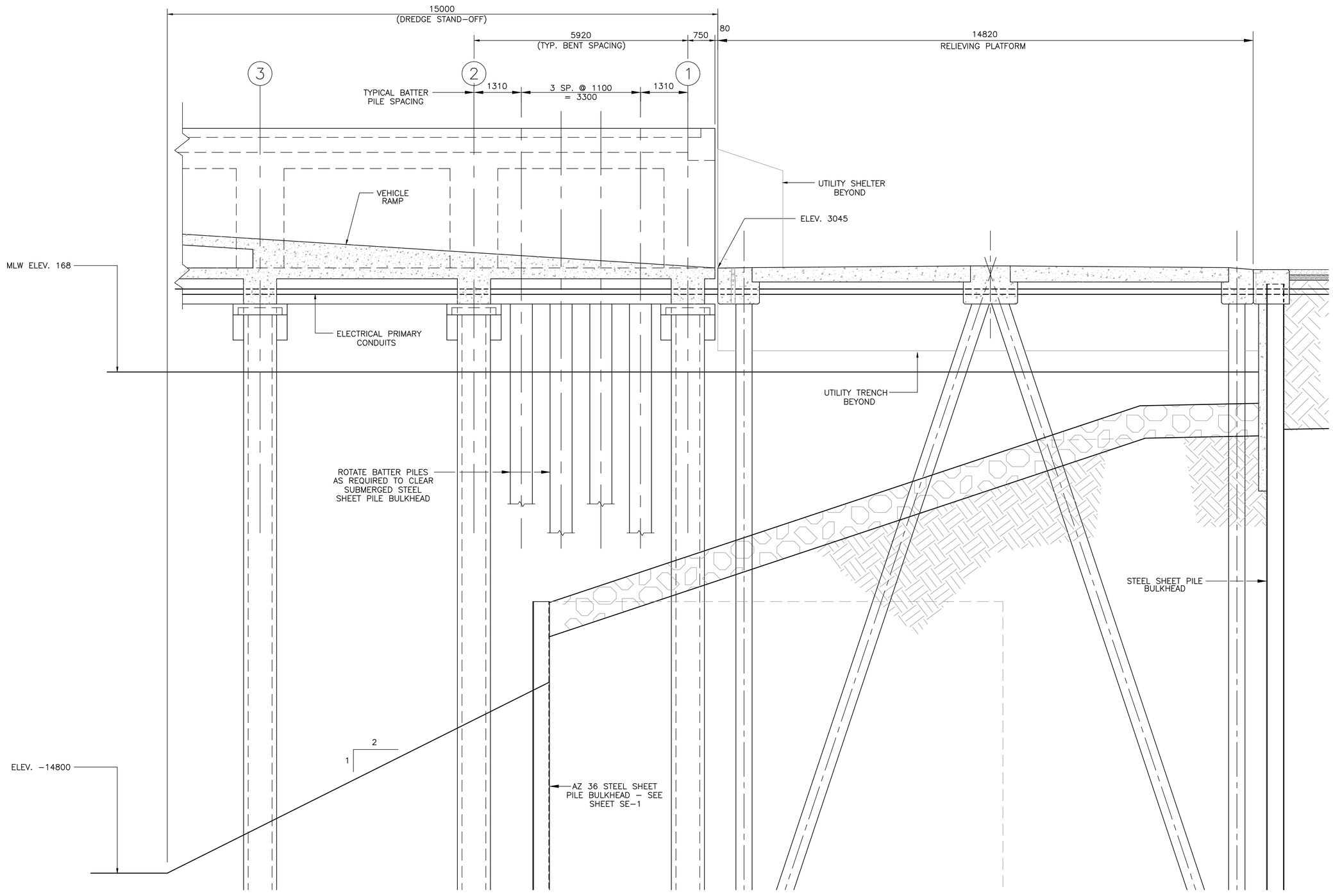

4 S2 S13 LONGITUDINAL SECTION AT VEHICLE RAMP, INSHORE END

SCALE: 1:50

GRAPHIC SCALE

1:50 0 1000 3000 5000mm

SYM.	DESCRIPTION	DATE	APPROVED
	INCORPORATED REVISED RELIEVING PLATFORM SECTION	3/27/98	

REVISIONS

DESIGNED & ENGINEERED BY: LANTDIV NAVAL FACILITIES ENGINEERING COMMAND

SEAL

APPROVED

ACTIVITY - SATISFACTORY TO

DATE

APPROVED

FOR EFD FOR COMMANDER, NAVFAC

4/08/99

DATE

A/E	EFD
DESIGN	HDK
DRAWN	HDK
REVIEW	BJD
QC	
CHIEF ARCH./ ENGR.	
PROJECT MANAGER	DWB
FIRE PROTECTION	
BRANCH MANAGER	
DESIGN DIRECTOR	

DEPARTMENT OF THE NAVY
NAVAL FACILITIES ENGINEERING COMMAND
NAVAL STATION
ATLANTIC DIVISION
NORFOLK, VIRGINIA
NAVAL STATION NORFOLK, VA.

PIER 2 REPLACEMENT

LONGITUDINAL SECTION AT VEHICLE RAMP

CODE ID. NO. 80091 | SIZE D

SCALE: 1:50

EFD NO. 493982

STA. PROJ. NO. P-355

SPEC. NO. 05-97-7041

CONSTR. CONTR. NO. N62470-97-B-7041

NAVFAC DRAWING NO. 4393982

SHEET 92 OF 240

S-13

FILENAME: 7041S013.DWG, PLOT SCALE: 1=1, SAVED ON 03/30/99 AT 12:58, XREFS: NONE

DRAWFORM REVISION 27 JULY 98

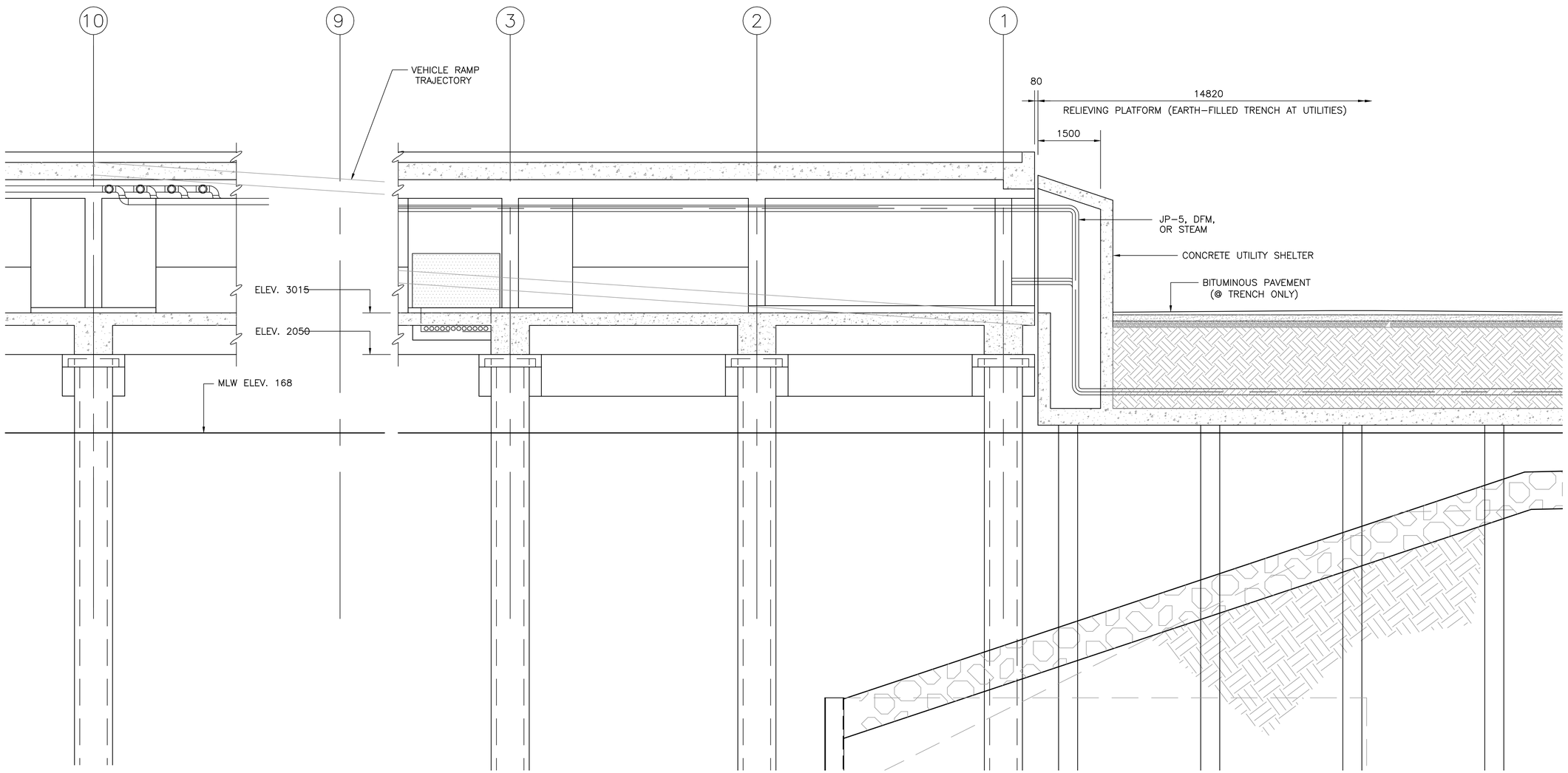

5
S2 S14

LONGITUDINAL SECTION AT LOWER DECK ENTRANCE, INSHORE END

SCALE: 1:50

GRAPHIC SCALE

1:50 0 1000 3000 5000mm

REVISIONS			
SYM.	DESCRIPTION	DATE	APPROVED
	INCORPORATED REVISED RELIEVING PLATFORM SECTION	5/27/99	

DESIGNED & ENGINEERED BY: LANTDIV NAVAL FACILITIES ENGINEERING COMMAND

SEAL

APPROVED

ACTIVITY – SATISFACTORY TO

DATE

APPROVED

FOR EFD FOR COMMANDER NAVFAC

4/08/99

DATE

A/E	EFD
DESIGN	HDK
DRAWN	HDK
REVIEW	BJD
QC	
CHIEF ARCH./ ENGR.	
PROJECT MANAGER	DWB
FIRE PROTECTION BRANCH MANAGER	
DESIGN DIRECTOR	

DEPARTMENT OF THE NAVY
NAVAL FACILITIES ENGINEERING COMMAND
ATLANTIC DIVISION
NAVAL STATION NORFOLK, VIRGINIA
NAVAL STATION NORFOLK, VA.

PIER 2 REPLACEMENT

LONGITUDINAL SECTION AT LOWER DECK ENTRANCE

CODE ID. NO. 80091	SIZE D
SCALE: 1:50	
EFD NO. 493983	
STA. PROJ. NO. P-355	
SPEC. NO. 05-97-7041	
CONSTR. CONTR. NO. N62470-97-B-7041	
NAVFAC DRAWING NO. 4393983	
SHEET 93 OF 240	

S-14

FILENAME: 7041S014.DWG, PLOT SCALE: 1=1, SAVED ON 03/29/99 AT 13:52, XREFS: NONE

DRAWFORM REVISION 27 JULY 98

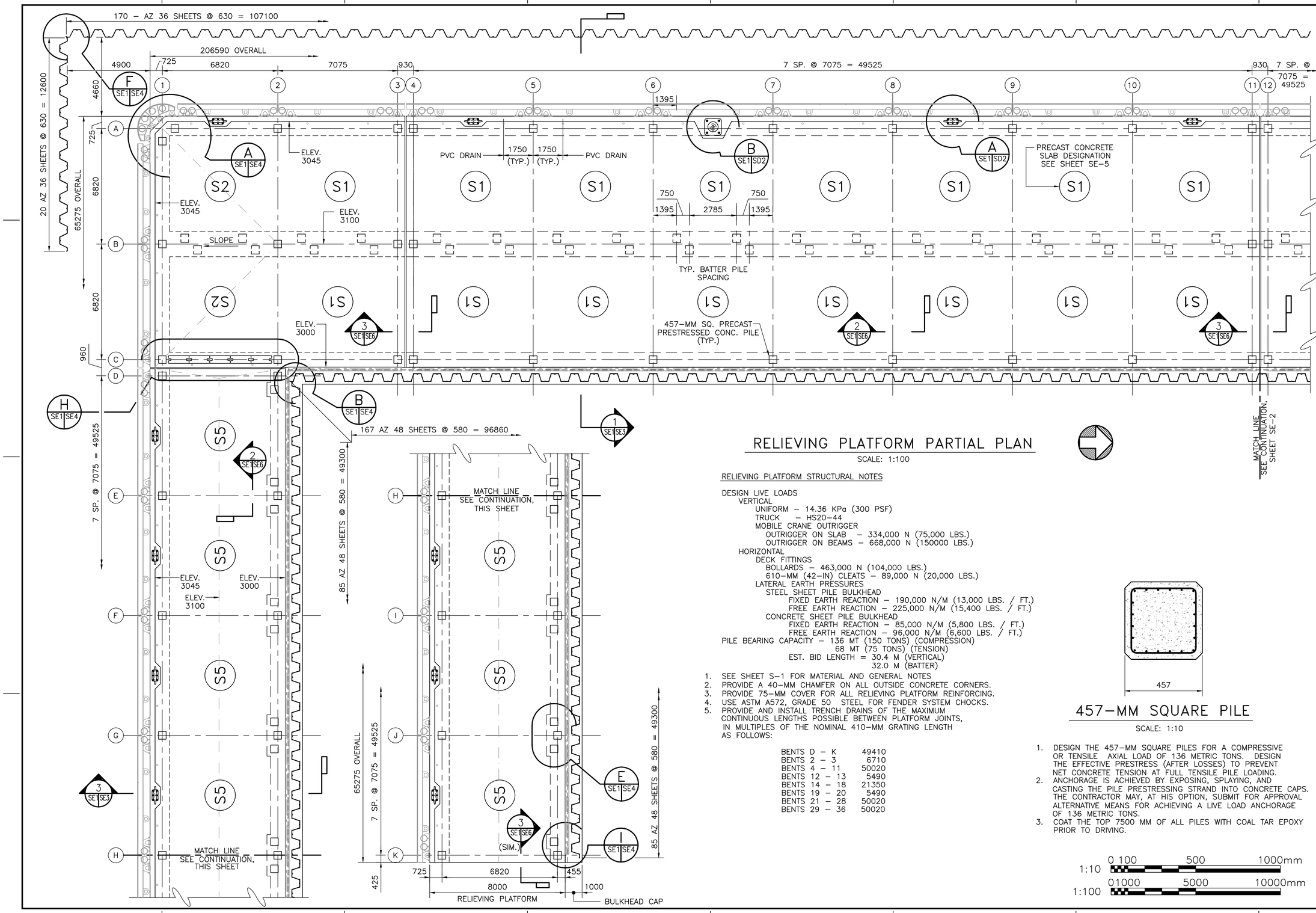

RELIEVING PLATFORM PARTIAL PLAN

SCALE: 1:100

RELIEVING PLATFORM STRUCTURAL NOTES

DESIGN LIVE LOADS
- VERTICAL
  - UNIFORM – 14.36 KPa (300 PSF)
  - TRUCK – HS20-44
  - MOBILE CRANE OUTRIGGER
    - OUTRIGGER ON SLAB – 334,000 N (75,000 LBS.)
    - OUTRIGGER ON BEAMS – 668,000 N (150000 LBS.)
- HORIZONTAL
  - DECK FITTINGS
    - BOLLARDS – 463,000 N (104,000 LBS.)
    - 610-MM (42-IN) CLEATS – 89,000 N (20,000 LBS.)
  - LATERAL EARTH PRESSURES
    - STEEL SHEET PILE BULKHEAD
      - FIXED EARTH REACTION – 190,000 N/M (13,000 LBS. / FT.)
      - FREE EARTH REACTION – 225,000 N/M (15,400 LBS. / FT.)
    - CONCRETE SHEET PILE BULKHEAD
      - FIXED EARTH REACTION – 85,000 N/M (5,800 LBS. / FT.)
      - FREE EARTH REACTION – 96,000 N/M (6,600 LBS. / FT.)

PILE BEARING CAPACITY – 136 MT (150 TONS) (COMPRESSION)
68 MT (75 TONS) (TENSION)
EST. BID LENGTH = 30.4 M (VERTICAL)
32.0 M (BATTER)

1. SEE SHEET S-1 FOR MATERIAL AND GENERAL NOTES
2. PROVIDE A 40-MM CHAMFER ON ALL OUTSIDE CONCRETE CORNERS.
3. PROVIDE 75-MM COVER FOR ALL RELIEVING PLATFORM REINFORCING.
4. USE ASTM A572, GRADE 50 STEEL FOR FENDER SYSTEM CHOCKS.
5. PROVIDE AND INSTALL TRENCH DRAINS OF THE MAXIMUM CONTINUOUS LENGTHS POSSIBLE BETWEEN PLATFORM JOINTS, IN MULTIPLES OF THE NOMINAL 410-MM GRATING LENGTH AS FOLLOWS:

BENTS D – K	49410
BENTS 2 – 3	6710
BENTS 4 – 11	50020
BENTS 12 – 13	5490
BENTS 14 – 18	21350
BENTS 19 – 20	5490
BENTS 21 – 28	50020
BENTS 29 – 36	50020

457-MM SQUARE PILE

SCALE: 1:10

1. DESIGN THE 457-MM SQUARE PILES FOR A COMPRESSIVE OR TENSILE AXIAL LOAD OF 136 METRIC TONS. DESIGN THE EFFECTIVE PRESTRESS (AFTER LOSSES) TO PREVENT NET CONCRETE TENSION AT FULL TENSILE PILE LOADING.
2. ANCHORAGE IS ACHIEVED BY EXPOSING, SPLAYING, AND CASTING THE PILE PRESTRESSING STRAND INTO CONCRETE CAPS. THE CONTRACTOR MAY, AT HIS OPTION, SUBMIT FOR APPROVAL ALTERNATIVE MEANS FOR ACHIEVING A LIVE LOAD ANCHORAGE OF 136 METRIC TONS.
3. COAT THE TOP 7500 MM OF ALL PILES WITH COAL TAR EPOXY PRIOR TO DRIVING.

1:10 0 100 500 1000mm
1:100 01000 5000 10000mm

REVISIONS

SYM.	DESCRIPTION	DATE	APPROVED
	REPLACEMENT SHEET PLATFORM REDESIGNED	3/27/98	

DESIGNED & ENGINEERED BY: LANTDIV NAVAL FACILITIES ENGINEERING COMMAND

SEAL

APPROVED
ACTIVITY – SATISFACTORY TO
DATE
APPROVED
FOR EFD FOR COMMANDER NAVFAC
4/08/99
DATE

A/E	EFD
DESIGN	RS/HK
DRAWN	RS/HK
REVIEW	BJD
QC	
CHIEF ARCH./ ENGR.	
PROJECT MANAGER	DWB
FIRE PROTECTION	
BRANCH MANAGER	
DESIGN DIRECTOR	

DEPARTMENT OF THE NAVY
NAVAL STATION
NAVAL FACILITIES ENGINEERING COMMAND
ATLANTIC DIVISION
NORFOLK, VIRGINIA
NAVAL STATION NORFOLK, VA
PIER 2 REPLACEMENT
RELIEVING PLATFORM – PARTIAL PLAN

CODE ID. NO. 80091	SIZE D
SCALE: NOTED	
EFD NO. 494038	
STA. PROJ. NO. P-355	
SPEC. NO. 05-97-7041	
CONSTR. CONTR. NO. N62470-97-B-7041	
NAVFAC DRAWING NO. 4394038	
SHEET 148 OF 240	

SE-1

DRAWFORM REVISION 27 JULY 98

FILENAME: 7041SE01.DWG, PLOT SCALE: 1=1, SAVED ON 03/31/99 AT 10:48, XREFS: NONE

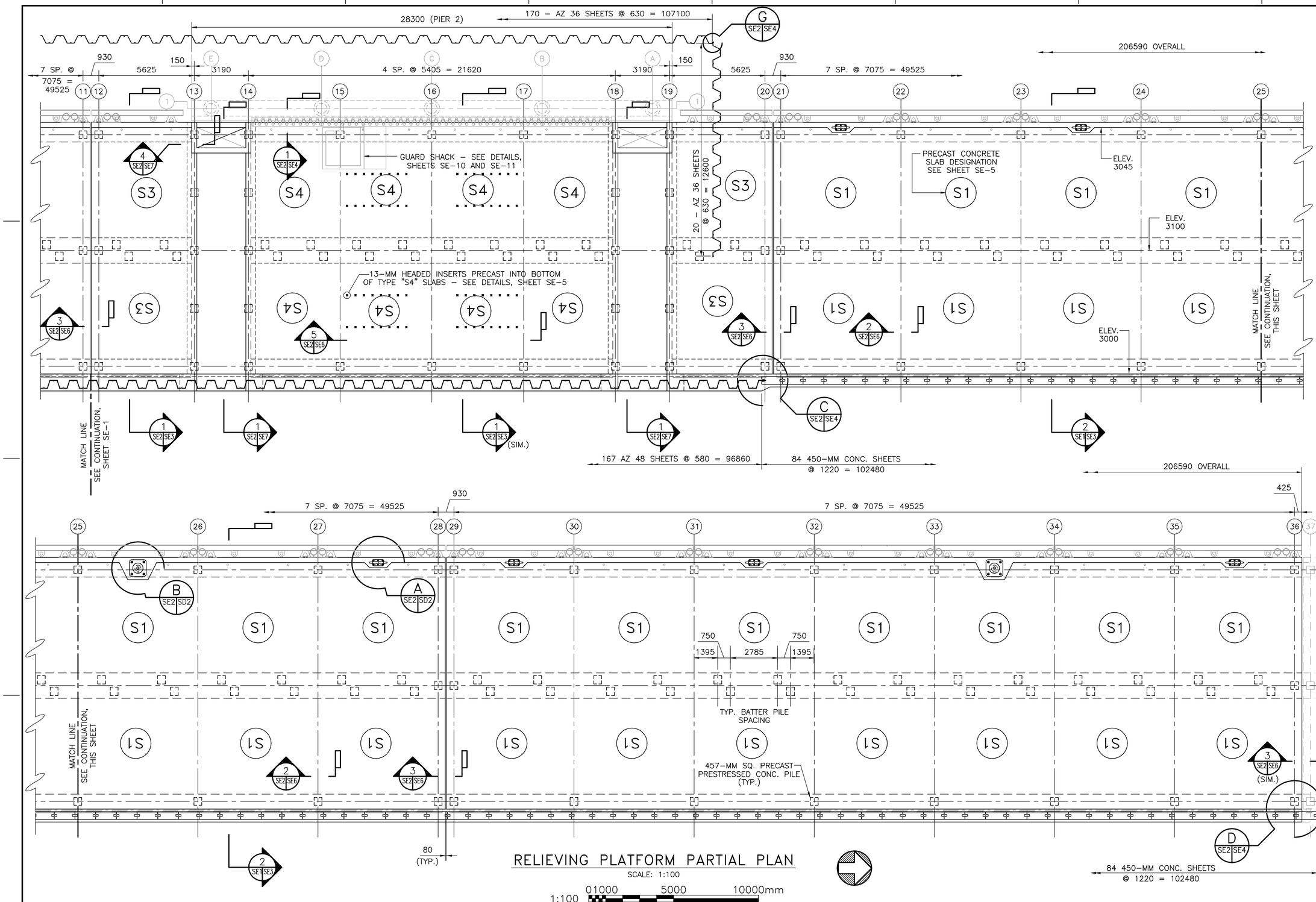

RELIEVING PLATFORM PARTIAL PLAN

SCALE: 1:100

1:100 01000 5000 10000mm

REVISIONS				
SYM.	DESCRIPTION	DATE	APPROVED	
	REPLACEMENT SHEET PLATFORM REDESIGNED	5/27/98		

DESIGNED & ENGINEERED BY: LANTDIV NAVAL FACILITIES ENGINEERING COMMAND

SEAL

APPROVED

ACTIVITY – SATISFACTORY TO

DATE

APPROVED

FOR EFD FOR COMMANDER NAVFAC 4/08/99

DATE

A/E

	EFD
DESIGN	RS/HK
DRAWN	RS/HK
REVIEW	BJD
QC	
CHIEF ARCH./ ENGR.	
PROJECT MANAGER	DWB
FIRE PROTECTION BRANCH MANAGER	
DESIGN DIRECTOR	

DEPARTMENT OF THE NAVY
NAVAL FACILITIES ENGINEERING COMMAND
ATLANTIC DIVISION
NAVAL STATION NORFOLK, VIRGINIA
NAVAL STATION NORFOLK, VA

PIER 2 REPLACEMENT

RELIEVING PLATFORM – PARTIAL PLAN

CODE ID. NO. 80091 | SIZE D

SCALE: NOTED

EFD NO. 494039

STA. PROJ. NO. P-355

SPEC. NO. 05-97-7041

CONSTR. CONTR. NO. N62470-97-B-7041

NAVFAC DRAWING NO. 4394039

SHEET 149 OF 240

SE-2

DRAWFORM REVISION 27 JULY 98

FILENAME: 7041SE02.DWG, PLOT SCALE: 1=1, SAVED ON 03/31/99 AT 10:50, XREFS: 7041SE01.DWG

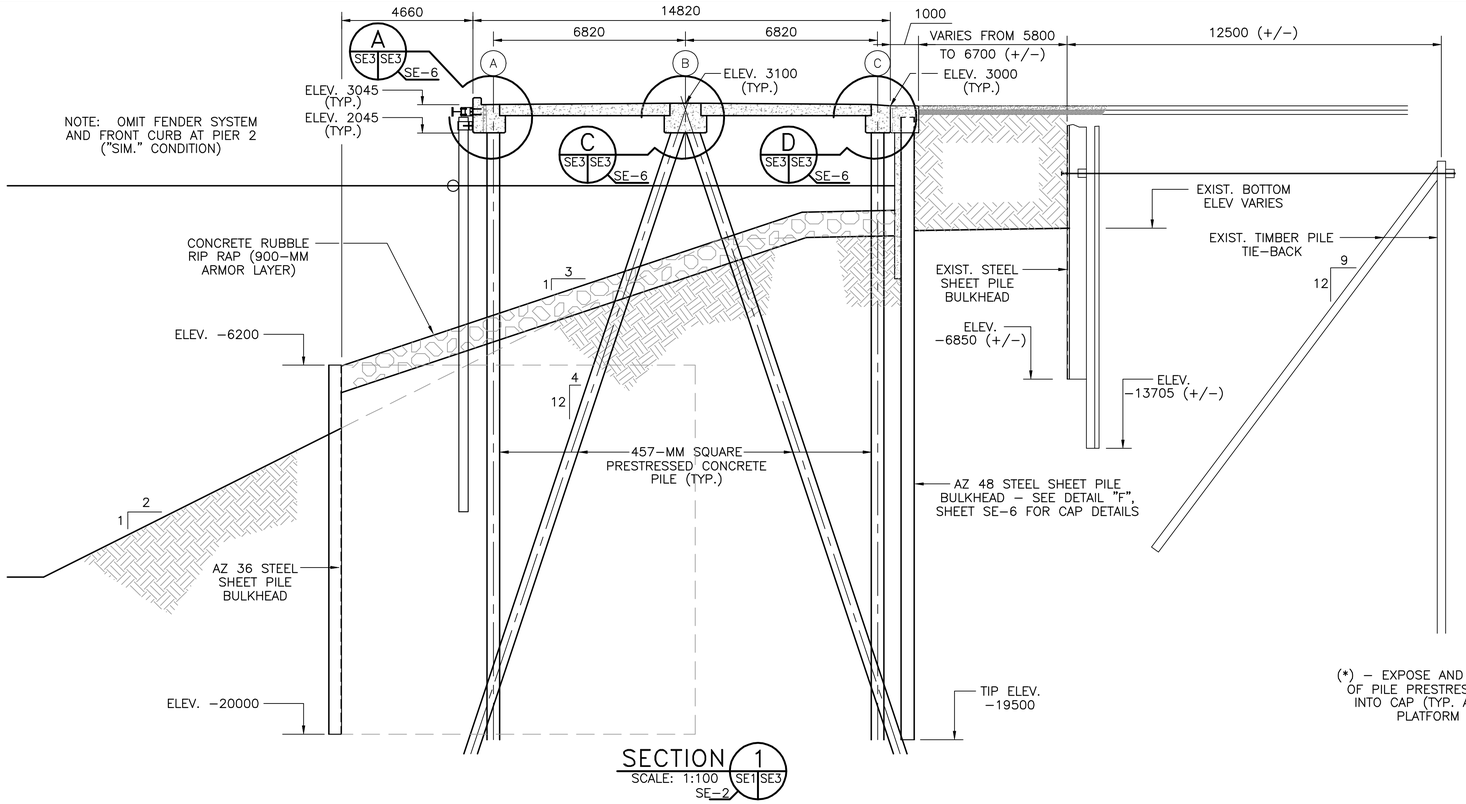

SECTION 1 (SE1 SE3)
SCALE: 1:100
SE−2

(*) − EXPOSE AND SPLAY 750−MM OF PILE PRESTRESSING STRANDS INTO CAP (TYP. ALL RELIEVING PLATFORM PILES).

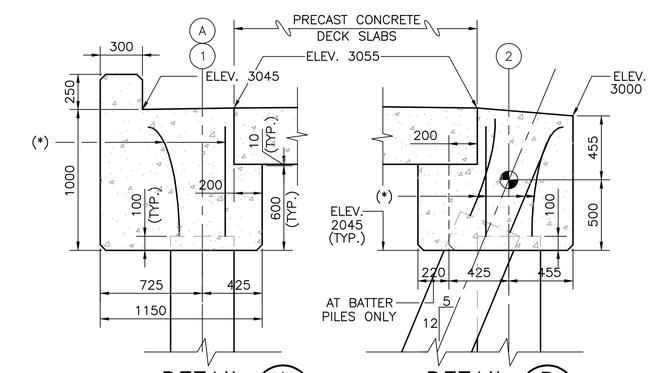

DETAIL A (SE3 SE3)
SCALE: 1:20

DETAIL B (SE3 SE3)
SCALE: 1:20

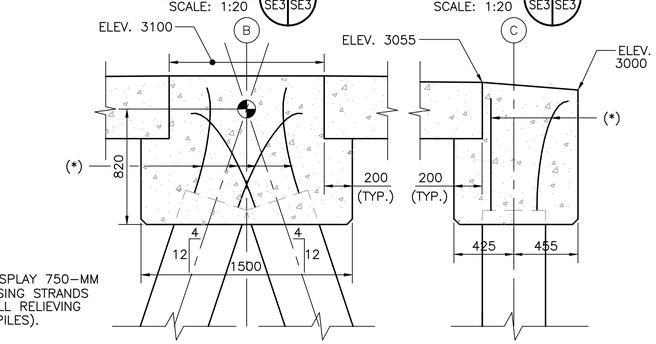

DETAIL C (SE3 SE3)
SCALE: 1:20

DETAIL D (SE3 SE3)
SCALE: 1:20

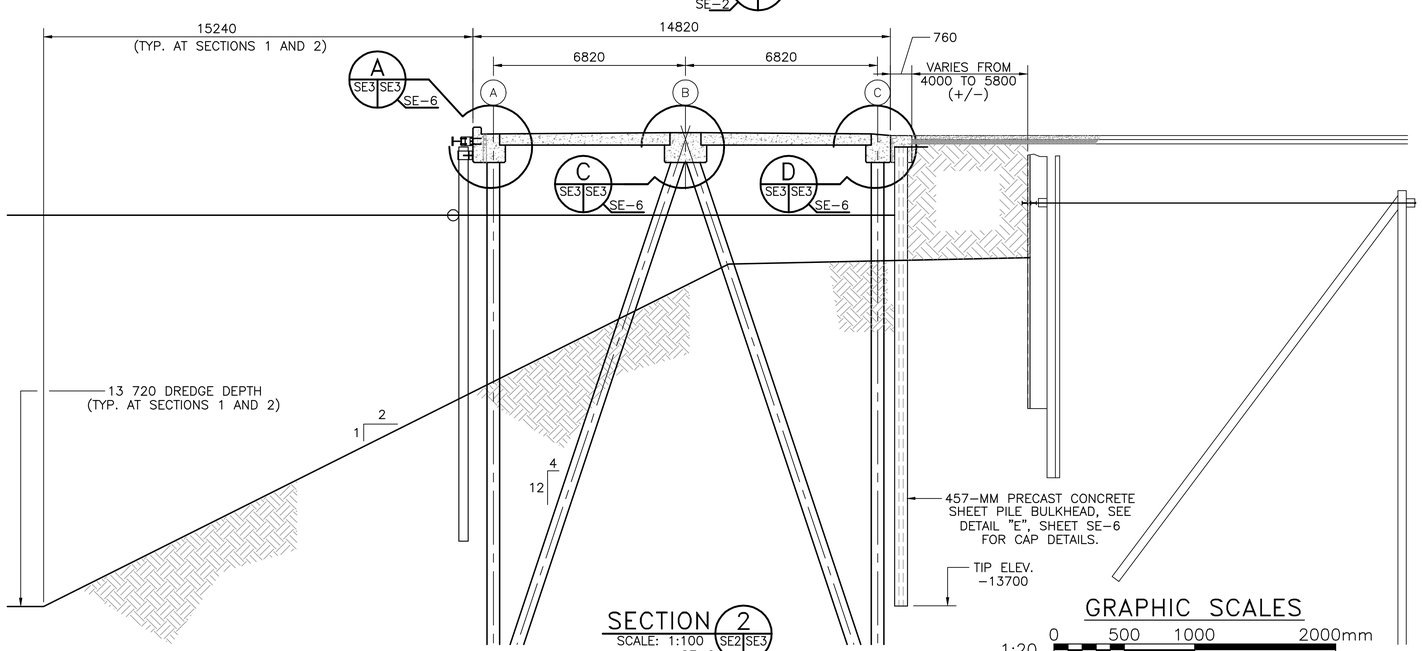

SECTION 2 (SE2 SE3)
SCALE: 1:100
SE−2

GRAPHIC SCALES
1:20 0 500 1000 2000mm
1:100 0 1000 5000 10000mm

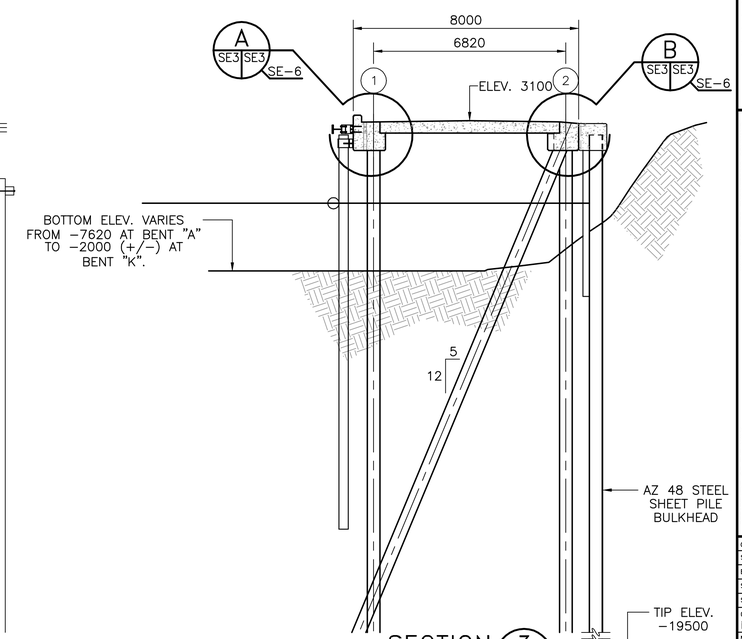

SECTION 3 (SE1 SE3)
SCALE: 1:100

REVISIONS			
STM.	DESCRIPTION	DATE	APPROVED
	REPLACEMENT SHEET PLATFORM REDESIGNED	5/27/98	

DESIGNED & ENGINEERED BY: LANTDIV NAVAL FACILITIES ENGINEERING COMMAND

SEAL

APPROVED
ACTIVITY − SATISFACTORY TO
DATE
APPROVED
FOR EFD FOR COMMANDER NAVFAC
4/08/99
DATE

A/E
DESIGN HK/RS EFD
DRAWN HK/RS
REVIEW BJD
QC
CHIEF ARCH./ ENGR.
PROJECT MANAGER DWB
FIRE PROTECTION
BRANCH MANAGER
DESIGN DIRECTOR

DEPARTMENT OF THE NAVY
NAVAL STATION
ATLANTIC DIVISION
NAVAL FACILITIES ENGINEERING COMMAND
NORFOLK, VIRGINIA

NAVAL STATION NORFOLK, VA
PIER 2 REPLACEMENT
TYPICAL RELIEVING PLATFORM SECTIONS

CODE ID. NO. 80091 SIZE D
SCALE: NOTED
EFD NO. 494040
STA. PROJ. NO. P−355
SPEC. NO. 05−97−7041
CONSTR. CONTR. NO. N62470−97−B−7041
NAVFAC DRAWING NO. 4394040
SHEET 150 OF 240
SE−3

FILENAME: 7041SE03.DWG, PLOT SCALE: 1=1, SAVED ON 03/31/99 AT 10:52, XREFS: NONE

DRAWFORM REVISION 27 JULY 98

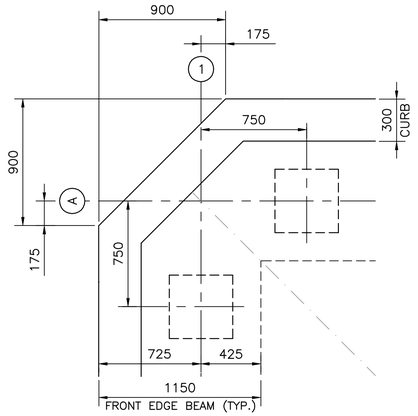

CORNER PLAN DETAIL (A / SE1 SE4)
SCALE: 1:20

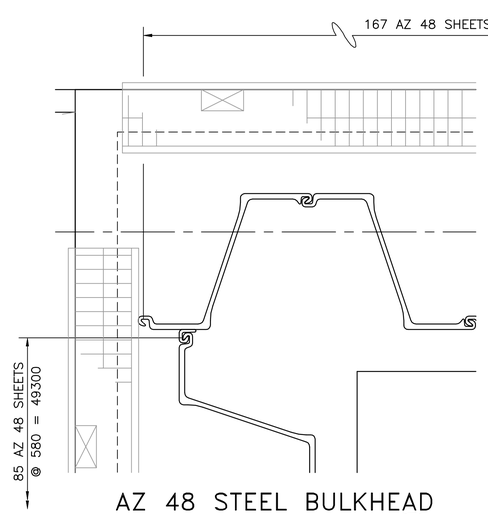

AZ 48 STEEL BULKHEAD CORNER DETAIL (B / SE1 SE4)
SCALE: 1:20

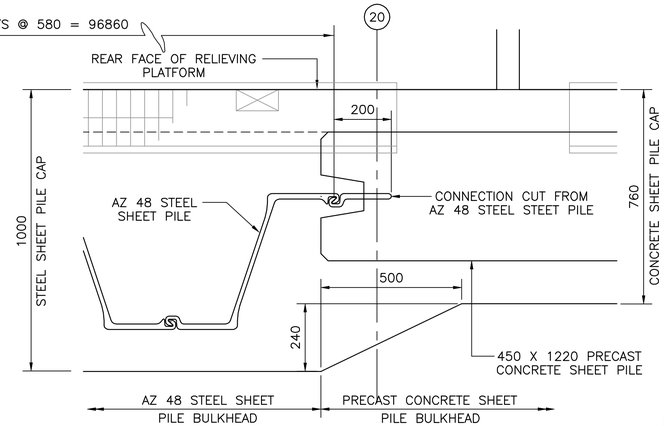

AZ 48 STEEL / CONCRETE BULKHEAD CONNECTION DETAIL (C / SE2 SE4)
SCALE: 1:10

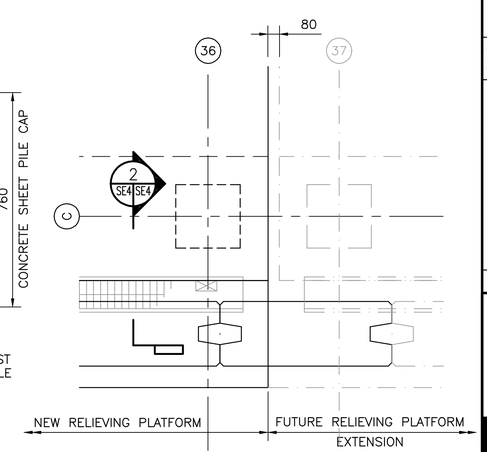

NORTH END PLAN DETAIL (D / SE2 SE4)
SCALE: 1:20

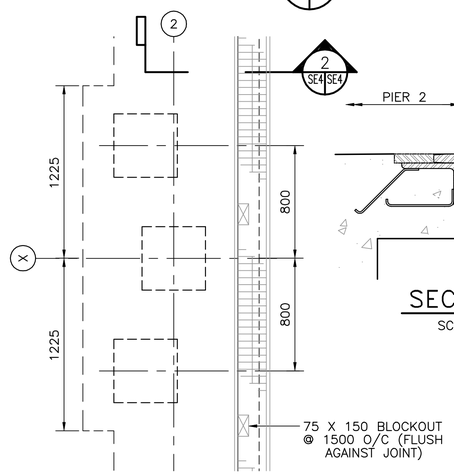

BATTER PILE CAP PLAN DETAIL (E / SE1 SE4)
SCALE: 1:20

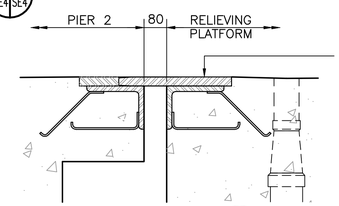

SECTION (1 / SE2 SE4)
SCALE: 1:10

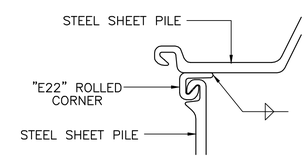

TYP. STEEL SHEET PILE CORNER DETAIL
SCALE: 1:5

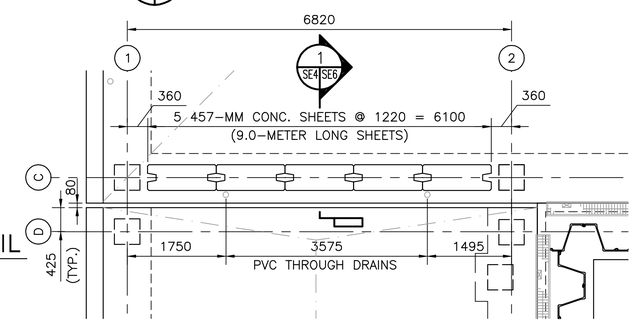

BREAKWATER PLAN DETAIL (H / SE1 SE4)
SCALE: 1:50

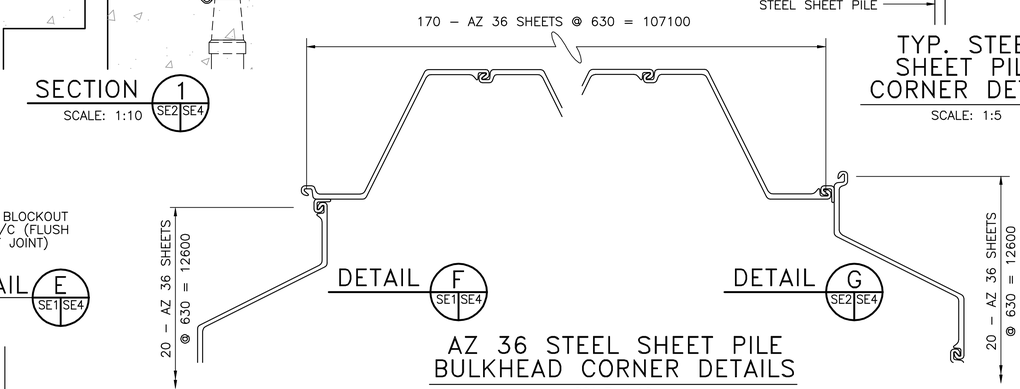

DETAIL (F / SE1 SE4)
DETAIL (G / SE2 SE4)

AZ 36 STEEL SHEET PILE BULKHEAD CORNER DETAILS
SCALE: 1:10

CONCRETE SHEET PILE NOTES:

1. CONCRETE SHALL HAVE A MINIMUM COMPRESSIVE STRENGTH OF 42 MPa AT 28 DAYS.
2. SECTIONS SHALL HAVE THE FOLLOWING PROPERTY VALUES PER METER:

T = 457 mm
W = 1220 mm
A = 4572 cm2
I = 796411 cm4
S = 34839 cm3
ALL. MOM. = 288.2 kN-m

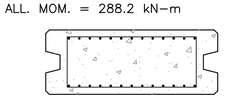

SECTION A-A

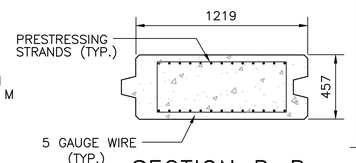

SECTION B-B

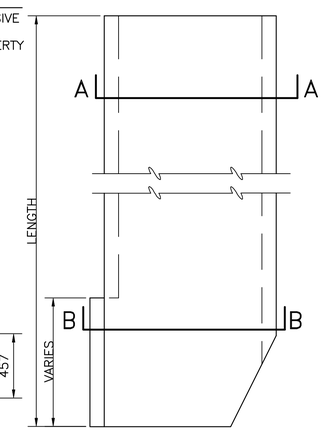

ELEVATION

PRECAST CONCRETE SHEET PILE DETAIL
NOT TO SCALE

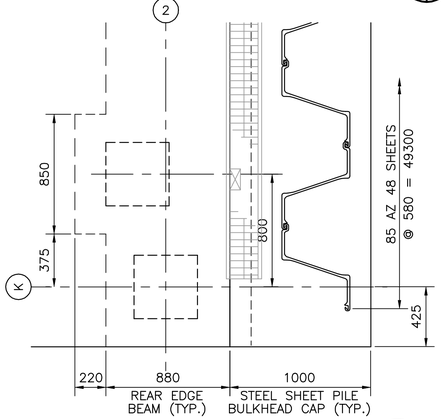

EAST END PLAN DETAIL (I / SE1 SE4)
SCALE: 1:20

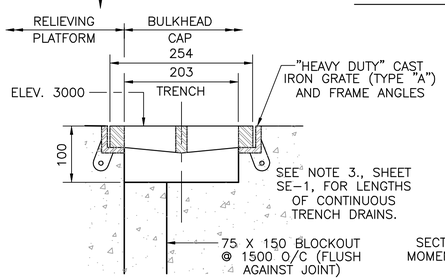

TYP. SECTION - CONT. TRENCH DRAIN (2 / SE4 SE4)
SCALE: 1:5

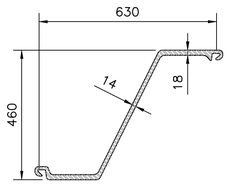

SECTION MODULUS - 3600 CM**3 / M
MOMENT OF INERTIA - 82800 CM**4 / M

AZ 36

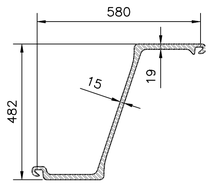

SECTION MODULUS - 4800 CM**3 / M
MOMENT OF INERTIA - 115670 CM**4 / M

AZ 48

STEEL SHEET PILE DETAILS
SCALE: 1:10

1:5 — 0 100 300 500mm
1:10 — 0 100 500 1000mm
1:20 — 0 500 1000 2000mm
1:50 — 0 1000 3000 5000mm

REVISIONS				
SYM.	DESCRIPTION	DATE	APPROVED	
	REPLACEMENT SHEET PLATFORM REDESIGNED	2/27/98		

DESIGNED & ENGINEERED BY: LANTDIV NAVAL FACILITIES ENGINEERING COMMAND

SEAL

APPROVED
ACTIVITY - SATISFACTORY TO
DATE
APPROVED
FOR EFD FOR COMMANDER NAVFAC
4/08/99
DATE

A/E	EFD
DESIGN	HK/RS
DRAWN	HK/RS
REVIEW	BJD
QC	
CHIEF ARCH./ ENGR.	
PROJECT MANAGER	DWB
FIRE PROTECTION	
BRANCH MANAGER	
DESIGN DIRECTOR	

DEPARTMENT OF THE NAVY
NAVAL FACILITIES ENGINEERING COMMAND
ATLANTIC DIVISION
NORFOLK, VIRGINIA
NAVAL STATION
NORFOLK, VA
PIER 2 REPLACEMENT
RELIEVING PLATFORM DETAILS

CODE ID. NO. 80091 | SIZE D
SCALE: NOTED
EFD NO. 494041
STA. PROJ. NO. P-355
SPEC. NO. 05-97-7041
CONTR. CONTR. NO. N62470-97-B-7041
NAVFAC DRAWING NO. 4394041
SHEET 151 OF 240
SE-4

FILENAME: 7041SE04.DWG; PLOT SCALE: 1=1, SAVED ON 03/31/99 AT 08:54; XREFS: 7041SE01.DWG

DRAWFORM REVISION 27 JULY 98

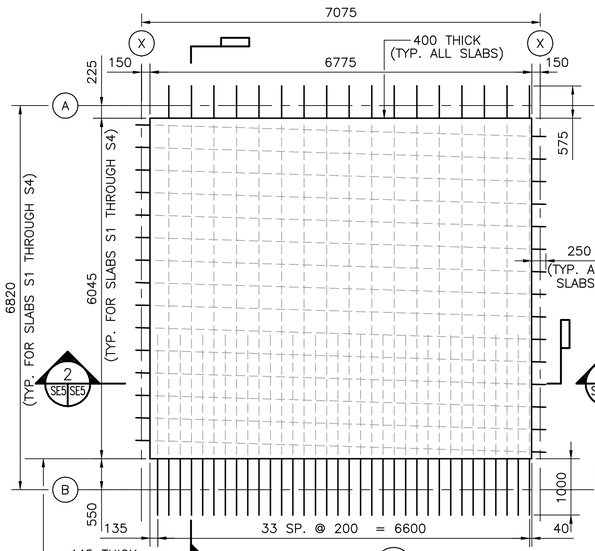

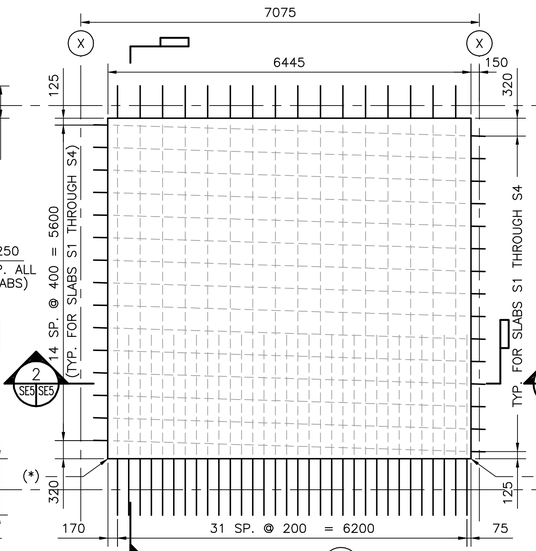

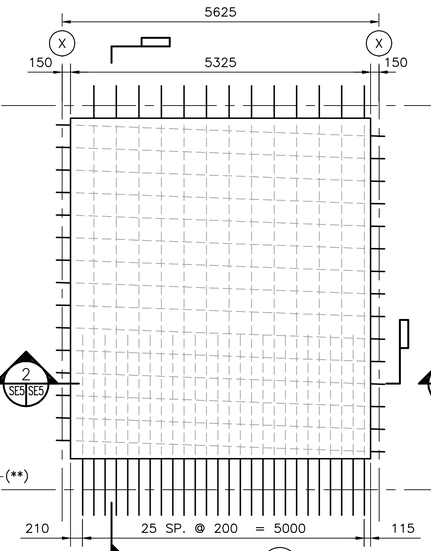

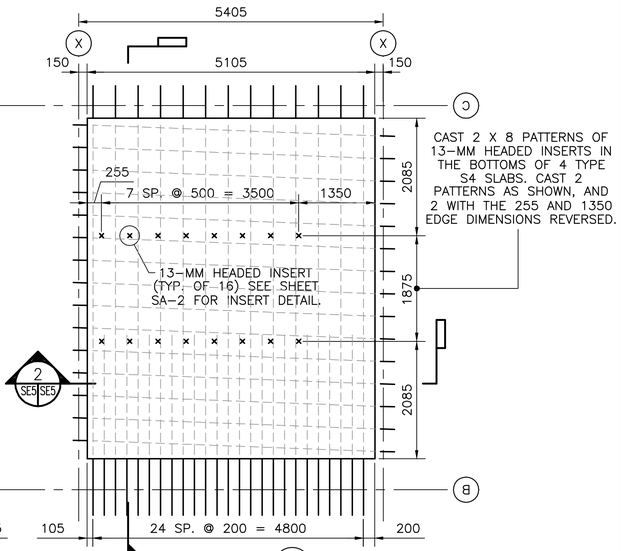

(*) – 400 THICK FOR WEST (OFFSHORE) SLAB,
445 THICK FOR EAST (INSHORE) SLAB

(**) – 445 THICK FOR WEST (OFFSHORE) SLAB,
400 THICK FOR EAST (INSHORE) SLAB

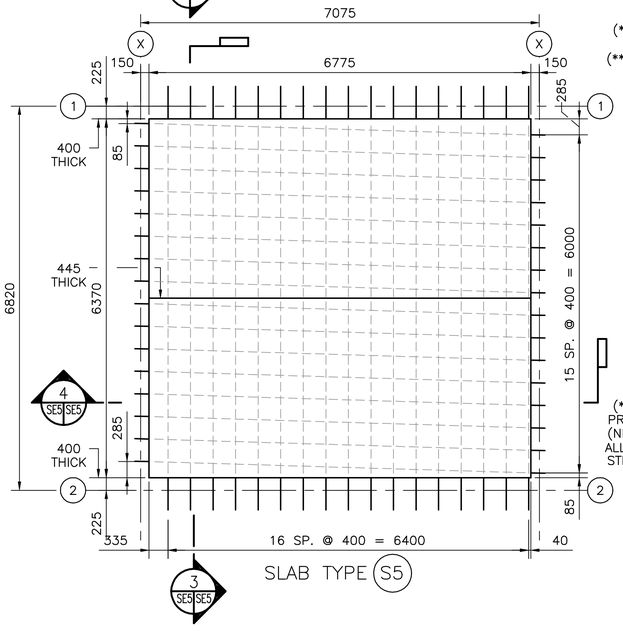

(***) – APPLY AN ECCENTRIC LONGITUDINAL PRESTRESS OF 66,000 KG/M (44,300 LB/FT) (NET, AFTER LOSSES), ACROSS THE WIDTH OF ALL PRECAST SLABS. ARRANGE PRESTRESSING STRANDS IN A SINGLE LAYER, 140-MM ABOVE THE BOTTOM OF ALL PRECAST SLABS.

RELIEVING PLATFORM PRECAST CONCRETE SLAB PLAN DETAILS

SCALE: 1:50

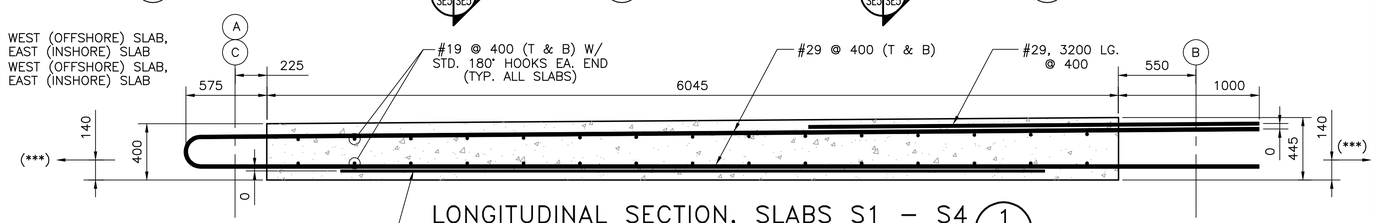

LONGITUDINAL SECTION, SLABS S1 – S4

SCALE: 1:20

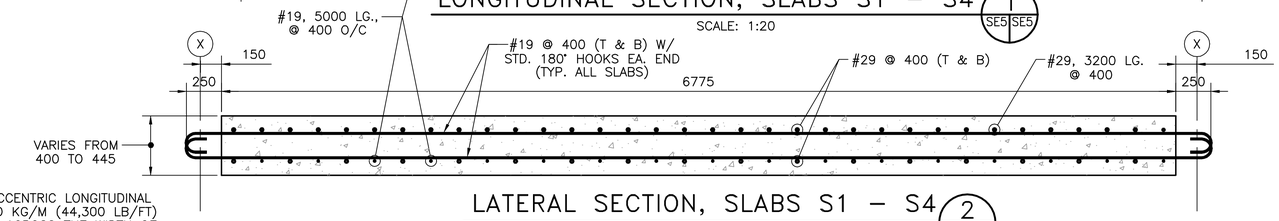

LATERAL SECTION, SLABS S1 – S4

SCALE: 1:20

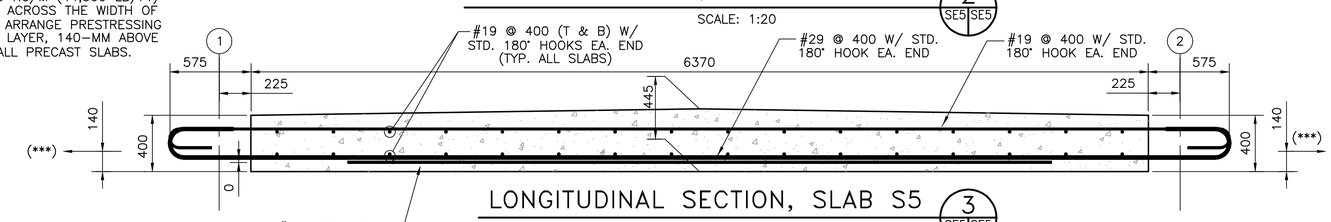

LONGITUDINAL SECTION, SLAB S5

SCALE: 1:20

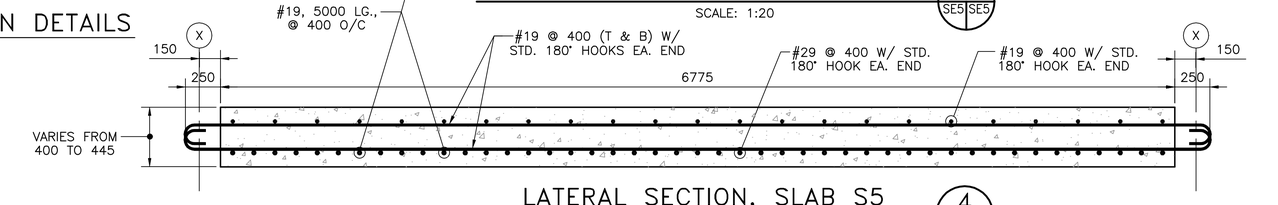

LATERAL SECTION, SLAB S5

SCALE: 1:20

GRAPHIC SCALES

1:20 — 0, 500, 1000, 2000mm

1:50 — 0, 1000, 3000, 5000mm

REVISIONS			
SYM.	DESCRIPTION	DATE	APPROVED
	REPLACEMENT SHEET PLATFORM REDESIGNED	3/27/99	

DESIGNED & ENGINEERED BY: LANTDIV NAVAL FACILITIES ENGINEERING COMMAND

SEAL

APPROVED

ACTIVITY – SATISFACTORY TO

DATE

APPROVED FOR EFD FOR COMMANDER, NAVFAC 4/08/99

DATE

A/E	EFD
DESIGN	HDK
DRAWN	HDK
REVIEW	BJD
QC	
CHIEF ARCH./ ENGR.	
PROJECT MANAGER	DWB
FIRE PROTECTION	
BRANCH MANAGER	
DESIGN DIRECTOR	

DEPARTMENT OF THE NAVY — NAVAL FACILITIES ENGINEERING COMMAND

NAVAL STATION — ATLANTIC DIVISION

NAVAL STATION — NORFOLK, VIRGINIA

PIER 2 REPLACEMENT

RELIEVING PLATFORM PRECAST SLAB DETAILS

CODE ID. NO. 80091 | SIZE D

SCALE: NOTED

EFD NO. 494042

STA. PROJ. NO. P-355

SPEC. NO. 05-97-7041

CONSTR. CONTR. NO. N62470-97-B-7041

NAVFAC DRAWING NO. 4394042

SHEET 152 OF 240

SE-5

FILENAME: 7041SE05.DWG, PLOT SCALE: 1=1, SAVED ON 03/30/99 AT 11:48, XREFS: NONE

DRAWFORM REVISION 27 JULY 98

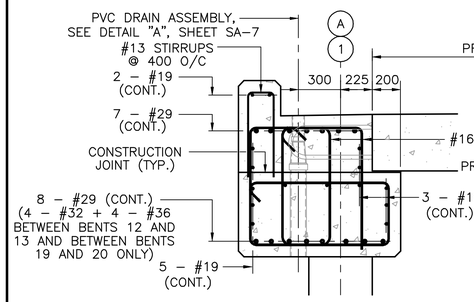

REINFORCING DETAIL A SE3 SE6
SCALE: 1:20

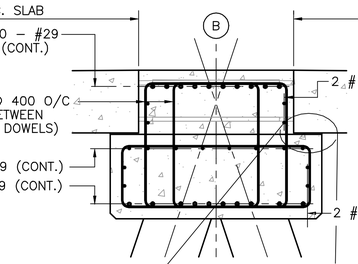

REINFORCING DETAIL C SE3 SE6
SCALE: 1:20

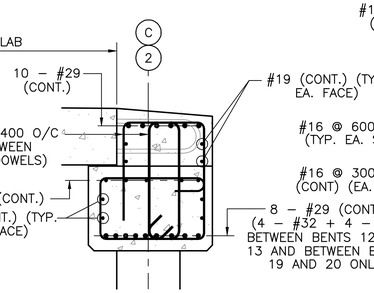

REINFORCING DETAIL D SE3 SE6
SCALE: 1:20

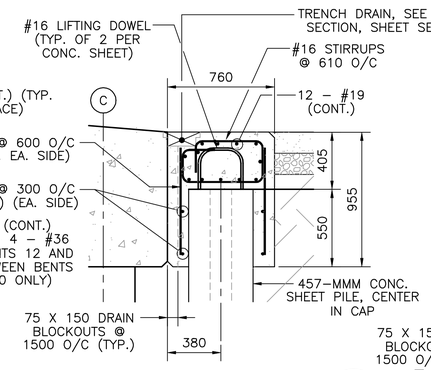

CONC. CAP DETAIL E SE3 SE6
SCALE: 1:20

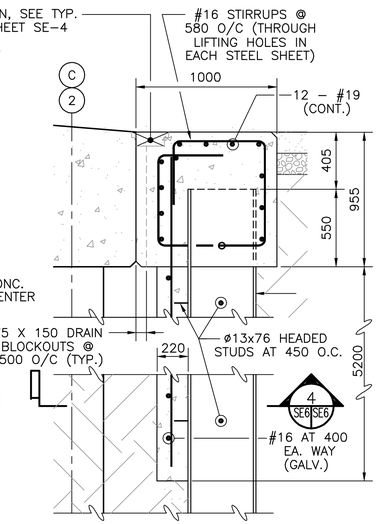

STEEL CAP DETAIL F SE3 SE6
SCALE: 1:20

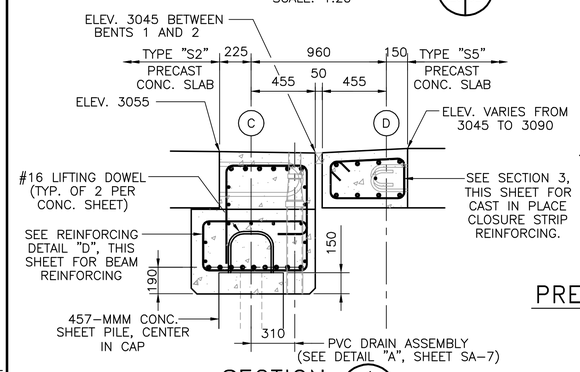

SECTION 1 SE4 SE6
SCALE: 1:20

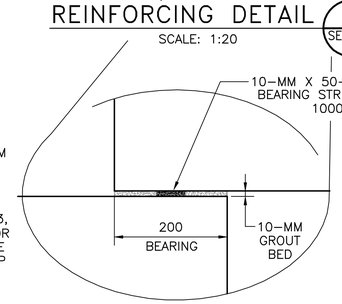

PRECAST SLAB BEARING DETAIL
NOT TO SCALE

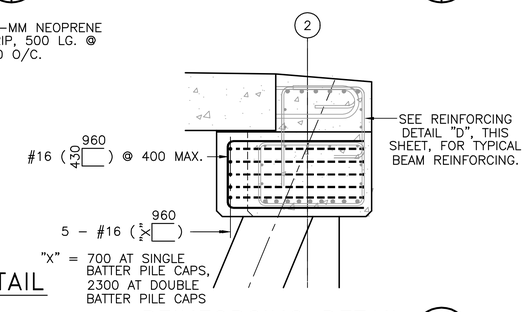

REINFORCING DETAIL B SE3 SE6
SCALE: 1:20

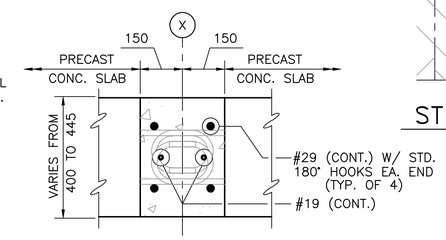

TYP. SLAB JOINT SECTION 2 SE1 SE6
SE2
SCALE: 1:10

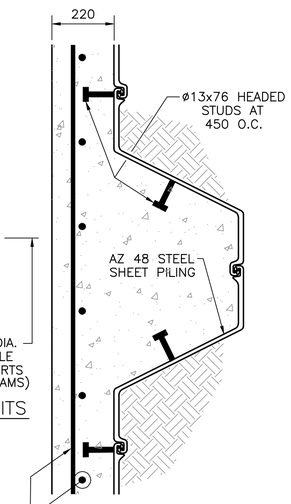

SECTION 4 SE6 SE6
SCALE: 1:20

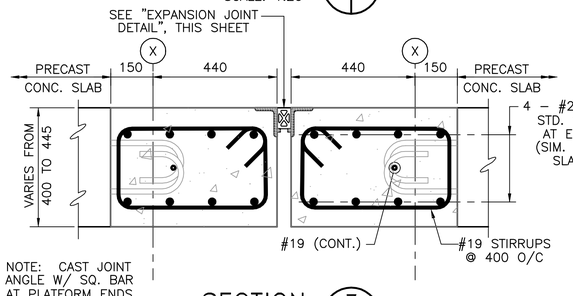

SECTION 3 SE1 SE6
SCALE: 1:10
SE-2

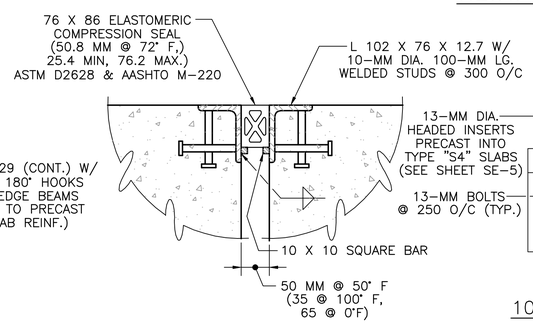

EXPANSION JOINT DETAIL
SCALE: 1:5

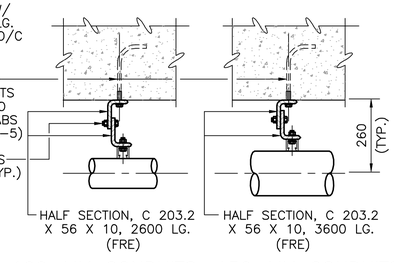

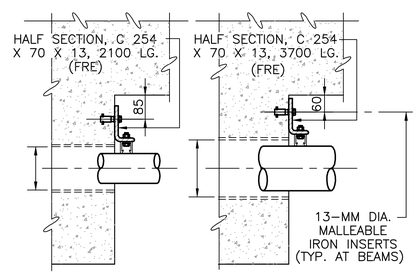

CONDUIT SUPPORT DETAILS
SCALE: 1:10
(SEE SHEET E-33 FOR CONDUIT DETAILS)

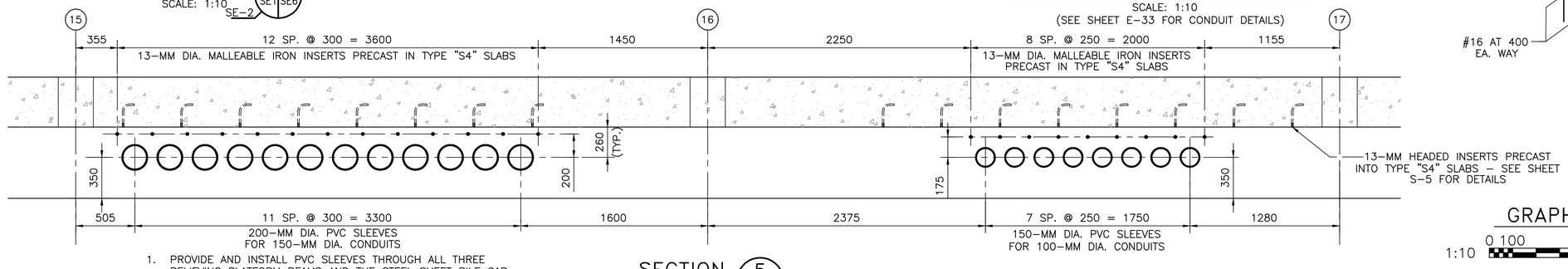

1. PROVIDE AND INSTALL PVC SLEEVES THROUGH ALL THREE RELIEVING PLATFORM BEAMS AND THE STEEL SHEET PILE CAP.
2. PROVIDE AND INSTALL 13-MM MALLEABLE IRON INSERTS ON THE EAST SIDE OF THE RELIEVING PLATFORM BEAM ALONG COLUMN LINE "A", ON BOTH SIDES OF THE BEAM ALONG COLUMN LINE "B", AND THE WEST SIDE OF THE BEAM ALONG COLUMN LINE "C".

SECTION 5 SE2 SE6
SCALE: 1:20

GRAPHIC SCALES
1:10 — 0 100 500 1000mm
1:20 — 0 500 1000 2000mm

REVISIONS			
SYM.	DESCRIPTION	DATE	APPROVED
	REPLACEMENT SHEET - PLATFORM WIDENED	3/27/99	

DESIGNED & ENGINEERED BY: LANTDIV NAVAL FACILITIES ENGINEERING COMMAND

SEAL

APPROVED
ACTIVITY - SATISFACTORY TO
DATE
APPROVED
FOR EFD FOR COMMANDER NAVFAC
4/08/99
DATE

A/E EFD
DESIGN RS/HK
DRAWN RS/HK
REVIEW HDK
QC
CHIEF ARCH./ ENGR.
PROJECT MANAGER DWB
FIRE PROTECTION
BRANCH MANAGER
DESIGN DIRECTOR

DEPARTMENT OF THE NAVY — NAVAL FACILITIES ENGINEERING COMMAND
NAVAL STATION — ATLANTIC DIVISION — NORFOLK, VIRGINIA
NAVAL STATION — NORFOLK, VA
PIER 2 REPLACEMENT
RELIEVING PLATFORM REINFORCING DETAILS

CODE ID. NO. 80091 | SIZE D
SCALE: AS NOTED
EFD NO. 494043
STA. PROJ. NO. P-355
SPEC. NO. 05-97-7041
CONSTR. CONTR. NO. N62470-97-B-7041
NAVFAC DRAWING NO. 4394043
SHEET 153 OF 240

SE-6

DRAWFORM REVISION 27 JULY 98

FILENAME: 7041SE06.DWG, PLOT SCALE: 1=1, SAVED ON 03/31/99 AT 08:58, XREFS: 7041SE03.DWG

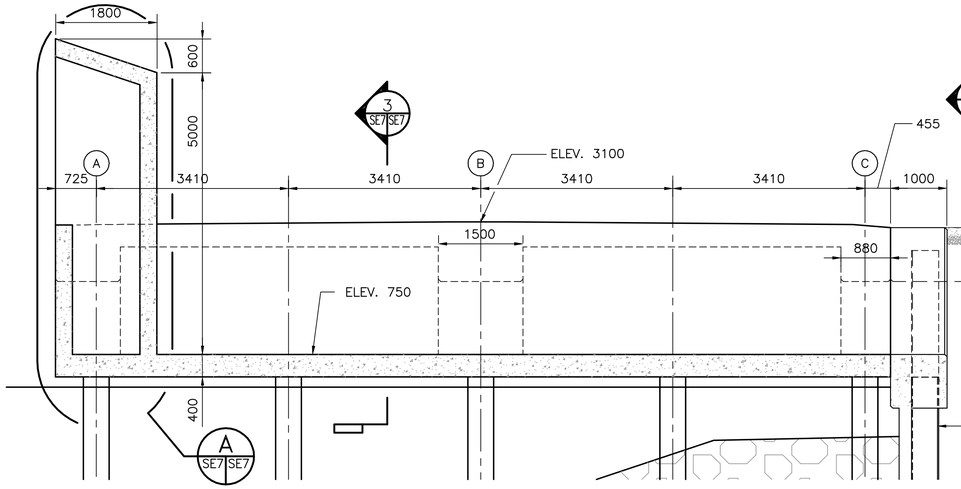

LONGITUDINAL TRENCH SECTION (1 / SE2 SE7)

SCALE: 1:50

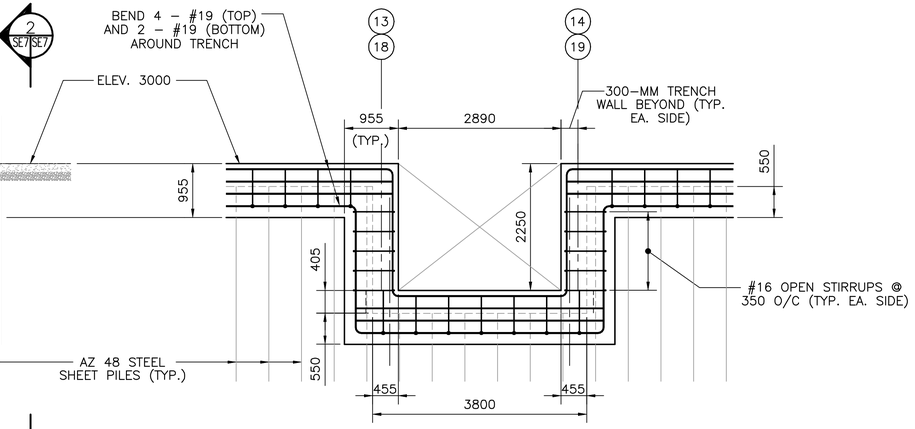

BULKHEAD ELEVATION AT TRENCHES (2 / SE7 SE7)

SCALE: 1:50

UTILITY TRENCH NOTES

1. GALVANIZE ALL REINFORCING USED IN THE TRENCH FLOOR SLAB AND WALLS UP TO ELEV. 3045.
2. CONTRACTOR MAY, AT HIS OPTION, PRECAST THE TRENCH FLOOR SLAB, PROVIDING PILE POCKETS AND GROUT SLEEVES AT ALL PILE LOCATIONS.
3. EXPOSE AND SPLAY 750 MM OF PILE PRESTRESSING STRAND INTO TRENCH WALLS (TYP. ALL TRENCH–SUPPORT PILES).

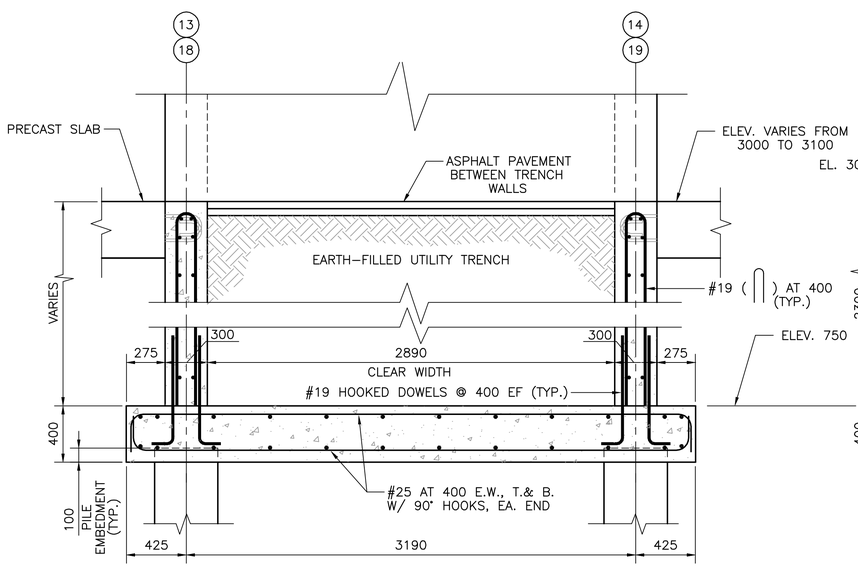

SECTION (3 / SE7 SE7)

SCALE: 20

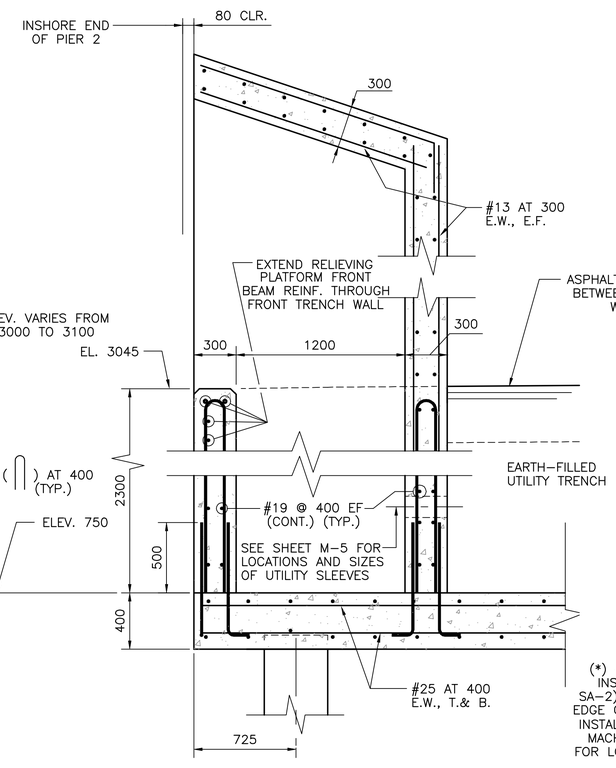

DETAIL (A / SE7 SE7)

SCALE: 1:20

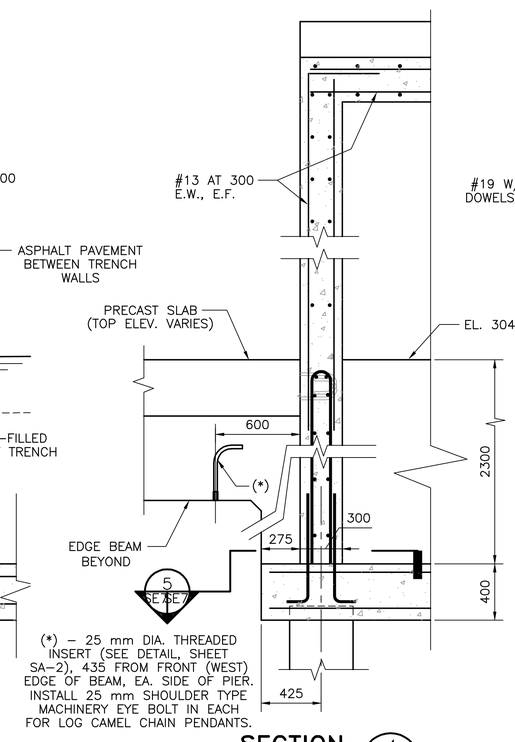

(*) – 25 mm DIA. THREADED INSERT (SEE DETAIL, SHEET SA–2), 435 FROM FRONT (WEST) EDGE OF BEAM, EA. SIDE OF PIER. INSTALL 25 mm SHOULDER TYPE MACHINERY EYE BOLT IN EACH FOR LOG CAMEL CHAIN PENDANTS.

SECTION (4 / SE2 SE7)

SCALE: 1:20

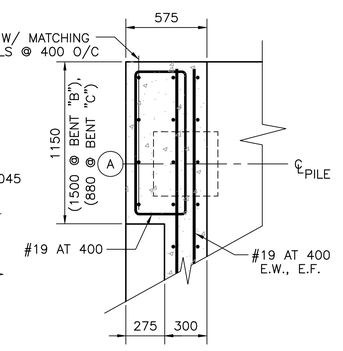

SECTION (5 / SE7 SE7)

SCALE: 1:20

(SIMILAR AT BENTS "B" AND "C")

BEND ALL LONGITUDINAL RELIEVING PLATFORM BEAM REINFORCING DOWN INTO TRENCH WALLS.

GRAPHIC SCALES

1:20 — 0 500 1000 2000mm

1:50 — 0 1000 3000 5000mm

REVISIONS				
SYM.	DESCRIPTION	DATE	APPROVED	
	REPLACEMENT SHEET – TRENCH LENGTHENED AND MODIFIED TO MATCH WIDENED PLATFORM	3/27/99		

DESIGNED & ENGINEERED BY: LANTDIV NAVAL FACILITIES ENGINEERING COMMAND

SEAL

APPROVED

ACTIVITY – SATISFACTORY TO

DATE

APPROVED

FOR EFD FOR COMMANDER NAVFAC

4/08/99

DATE

A/E — EFD

DESIGN RS/HK

DRAWN RS/HK

REVIEW BJD

QC

CHIEF ARCH./ ENGR.

PROJECT MANAGER DWB

FIRE PROTECTION

BRANCH MANAGER

DESIGN DIRECTOR

DEPARTMENT OF THE NAVY — NAVAL FACILITIES ENGINEERING COMMAND

NAVAL STATION NORFOLK, VIRGINIA — ATLANTIC DIVISION

NAVAL STATION NORFOLK, VA

PIER 2 REPLACEMENT

RELIEVING PLATFORM UTILITY TRENCH DETAILS

CODE ID. NO. 80091 | SIZE D

SCALE: AS NOTED

EFD NO. 494044

STA. PROJ. NO. P–355

SPEC. NO. 05–97–7041

CONSTR. CONTR. NO. N62470–97–B–7041

NAVFAC DRAWING NO. 4394044

SHEET 154 OF 240

SE–7

DRAWFORM REVISION 27 JULY 98

FILENAME: 7041SE07.DWG, PLOT SCALE: 1=1, SAVED ON 03/30/99 AT 11:49, XREFS: NONE

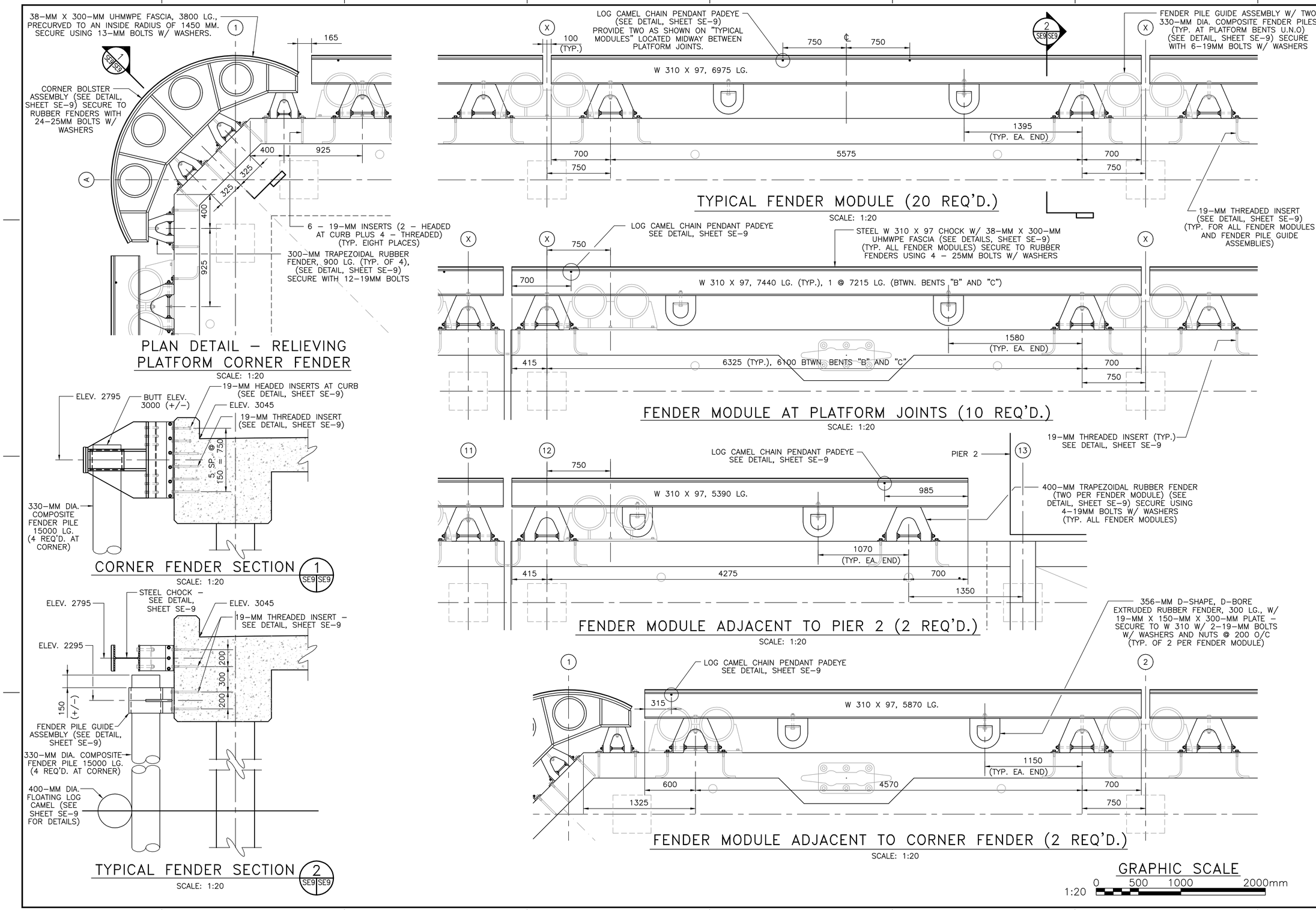

REVISIONS

SYM.	DESCRIPTION	DATE	APPROVED
	REPLACEMENT SHEET REDESIGNED FENDER SYSTEM	3/27/98	

DESIGNED & ENGINEERED BY: LANTDIV NAVAL FACILITIES ENGINEERING COMMAND

SEAL

APPROVED

ACTIVITY - SATISFACTORY TO

DATE

APPROVED FOR EFD FOR COMMANDER NAVFAC 4/08/99

DATE

A/E	EFD
DESIGN	HDK
DRAWN	HDK
REVIEW	BJD
QC	
CHIEF ARCH./ ENGR.	
PROJECT MANAGER	DWB
FIRE PROTECTION	
BRANCH MANAGER	
DESIGN DIRECTOR	

DEPARTMENT OF THE NAVY
NAVAL FACILITIES ENGINEERING COMMAND
ATLANTIC DIVISION
NORFOLK, VIRGINIA
NAVAL STATION
NORFOLK, VA
PIER 2 REPLACEMENT
RELIEVING PLATFORM FENDER SYSTEM DETAILS

CODE ID. NO. 80091	SIZE D
SCALE:	NOTED
EFD NO.	494045
STA. PROJ. NO.	P-355
SPEC. NO.	05-97-7041
CONSTR. CONTR. NO.	N62470-97-B-7041
NAVFAC DRAWING NO.	4394045
SHEET	155 OF 240

SE-8

FILENAME: 7041SE08.DWG, PLOT SCALE: 1=1, SAVED ON 03/31/99 AT 11:03, XREFS: 7041SE01.DWG

DRAWFORM REVISION 27 JULY 98

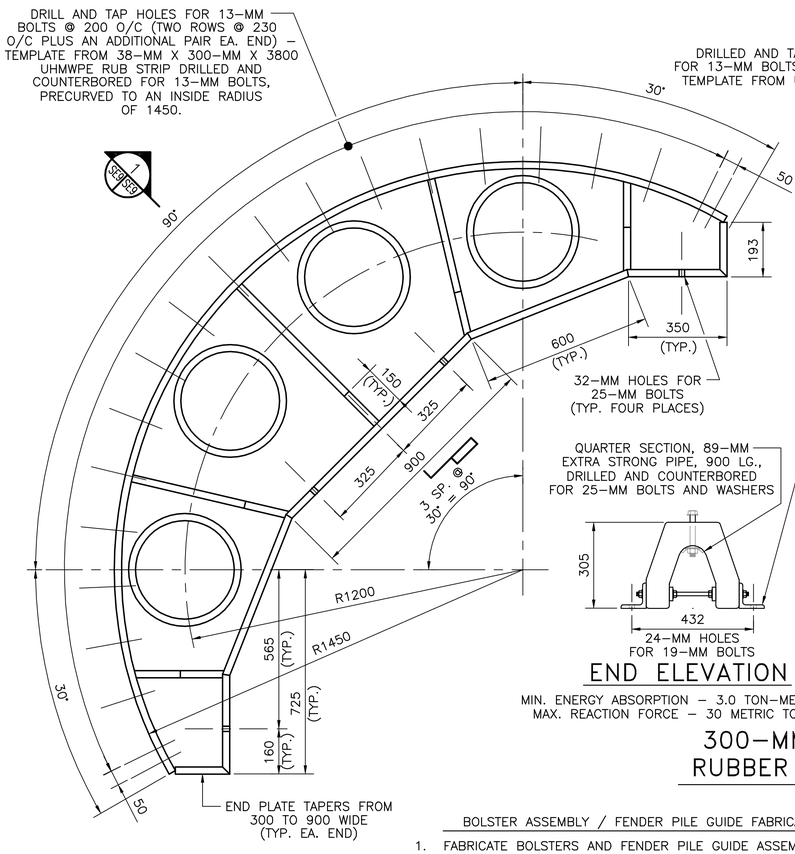

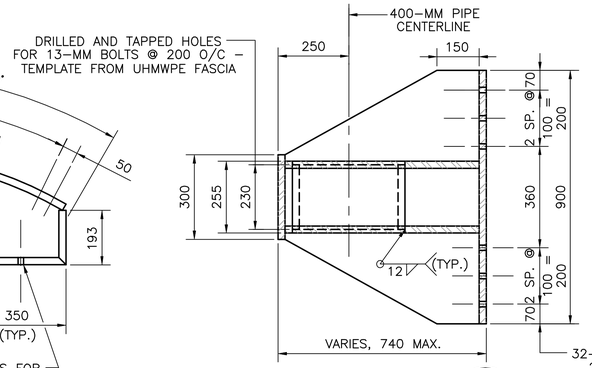

SECTION 1 (SE9/SE9)
SCALE: 1:10

END ELEVATION

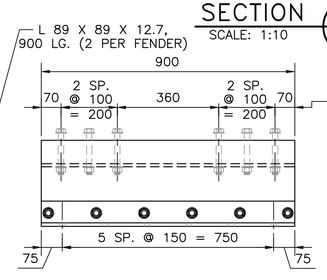

SIDE ELEVATION

MIN. ENERGY ABSORPTION – 3.0 TON-METERS PER METER LENGTH @ 150-MM DEFLECTION
MAX. REACTION FORCE – 30 METRIC TONS PER METER LENGTH @ 150-MM DEFLECTION

300-MM TRAPEZOIDAL RUBBER FENDER DETAIL

SCALE: 1:10

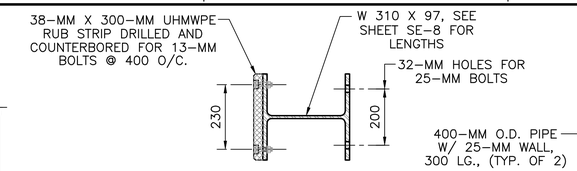

TYPICAL CHOCK SECTION

SCALE: 1:10

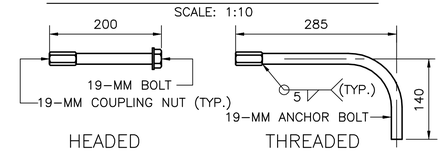

19-MM INSERT DETAILS

SCALE: 1:5

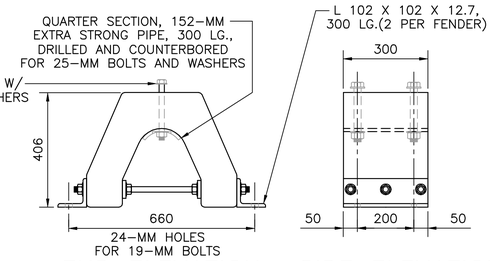

END ELEVATION

SIDE ELEVATION

MIN. ENERGY ABSORPTION – 3.75 TON-METERS PER METER LENGTH @ 150-MM DEFLECTION
MAX. REACTION FORCE – 35 METRIC TONS PER METER LENGTH @ 150-MM DEFLECTION

400-MM TRAPEZOIDAL RUBBER FENDER DETAIL

SCALE: 1:10

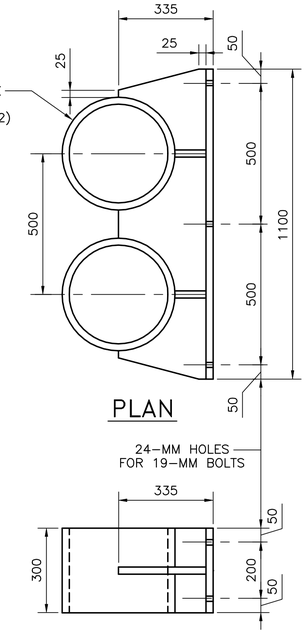

PLAN

SIDE ELEVATION

RELIEVING PLATFORM FENDER PILE GUIDE ASSEMBLY

SCALE: 1:10

BOLSTER ASSEMBLY / FENDER PILE GUIDE FABRICATION NOTES

1. FABRICATE BOLSTERS AND FENDER PILE GUIDE ASSEMBLIES USING 25-MM PLATE, ASSEMBLED WITH 19-MM CONTINUOUS FILLET WELDS, OR FULL PENETRATION SINGLE OR DOUBLE BEVEL WELDS, ALL AROUND, AS APPROPRIATE.
2. HOT – DIP GALVANIZE COMPLETED FABERICATIONS.
3. TEMPLATE DRILLED AND TAPPED HOLES IN FRONT PLATE FROM UHMWPE RUB STRIP. SECURE UHMWPE RUB STRIP USING 13-MM BOLTS W/ WASHERS.

RELIEVING PLATFORM CORNER BOLSTER ASSEMBLY

SCALE: 1:10

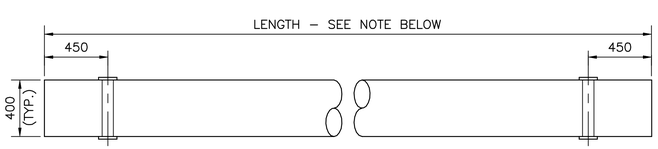

LOG CAMEL DETAIL

SCALE: 1:20

PROVIDE AND INSTALL FLOATING LOG CAMELS OF THE QUANTITIES AND LENGTHS AS FOLLOWS:

TYPICAL INSTALLATION	6 @ 24630
ADJACENT TO PIER 2	2 @ 29830
ADJACENT TO PLATFORM CORNER	1 @ 13750 (BENTS 1 – 3)
	1 @ 13500 (BENTS A – C)

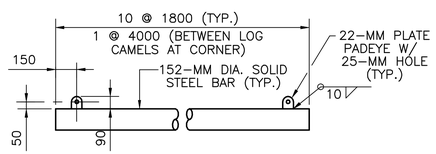

LOG CAMEL WEIGHT DETAIL

SCALE: 1:20

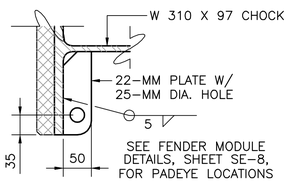

LOG CAMEL CHAIN PENDANT PADEYE DETAIL

SCALE: 1:5

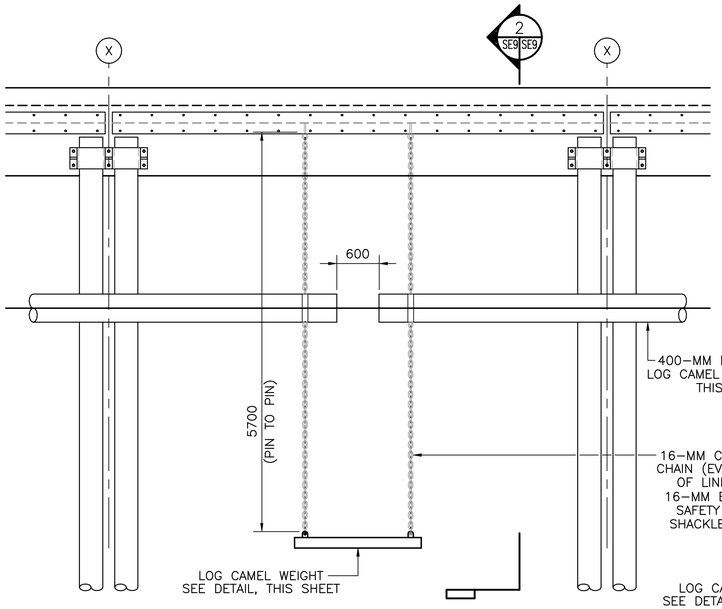

RELIEVING PLATFORM FENDER SYSTEM ELEVATION

SCALE: 1:40

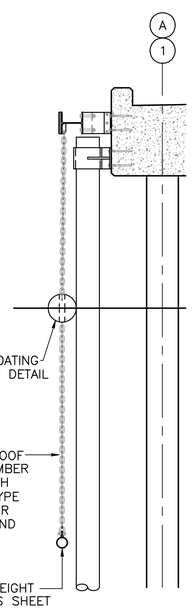

SECTION 2 (SE9/SE9)
SCALE: 1:40

GRAPHIC SCALES

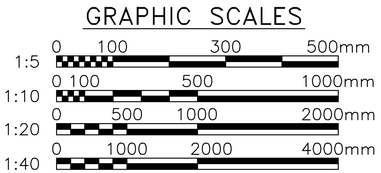

REVISIONS				
SYM.	DESCRIPTION	DATE	APPROVED	
	REPLACEMENT SHEET REDESIGNED FENDER SYSTEM	3/27/99		

DESIGNED & ENGINEERED BY: LANTDIV NAVAL FACILITIES ENGINEERING COMMAND

SEAL

APPROVED
ACTIVITY – SATISFACTORY TO
DATE
APPROVED
FOR EFD FOR COMMANDER NAVFAC
4/08/99
DATE

A/E	EFD
DESIGN	HDK
DRAWN	HDK
REVIEW	BJD
QC	
CHIEF ARCH./ ENGR.	
PROJECT MANAGER	DWB
FIRE PROTECTION	
BRANCH MANAGER	
DESIGN DIRECTOR	

DEPARTMENT OF THE NAVY – NAVAL FACILITIES ENGINEERING COMMAND
ATLANTIC DIVISION – NORFOLK, VIRGINIA
NAVAL STATION – NORFOLK, VA
PIER 2 REPLACEMENT
RELIEVING PLATFORM FENDER SYSTEM DETAILS

CODE ID. NO. 80091	SIZE D
SCALE:	NOTED
EFD NO.	494046
STA. PROJ. NO.	P-355
SPEC. NO.	05-97-7041
CONSTR. CONTR. NO.	N62470-97-B-7041
NAVFAC DRAWING NO.	4394046
SHEET	156 OF 240

SE-9

FILENAME: 7041SE09.DWG, PLOT SCALE: 1=1, SAVED ON 03/30/99 AT 09:22, XREFS: NONE

DRAWFORM REVISION 27 JULY 98

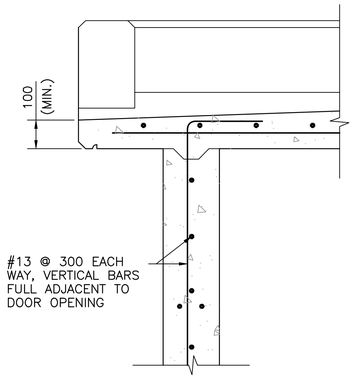

SECTION 1 (SE10/SE11)
1 : 10

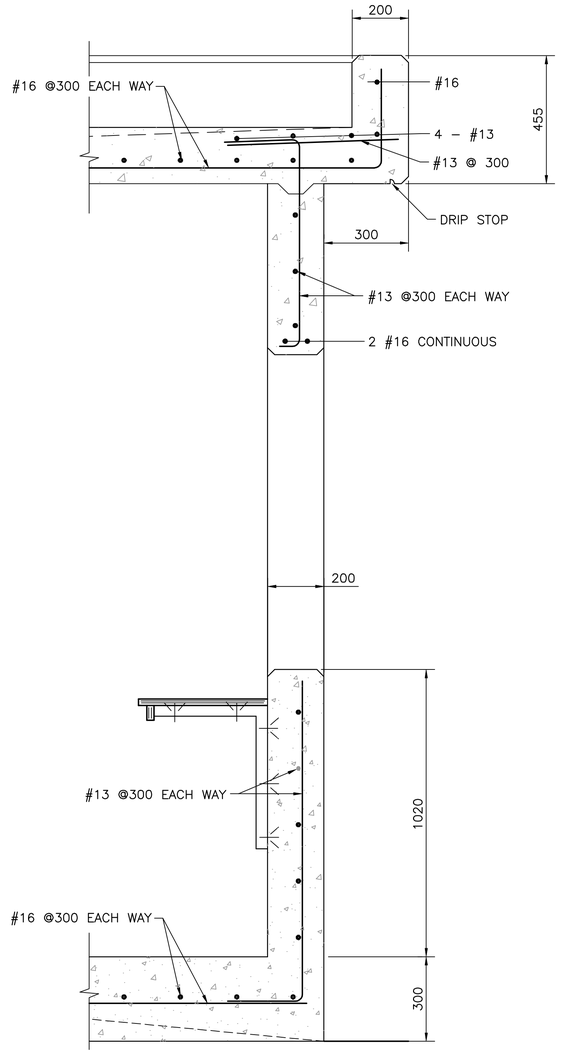

SECTION 3 (SE10/SE11)
1 : 10

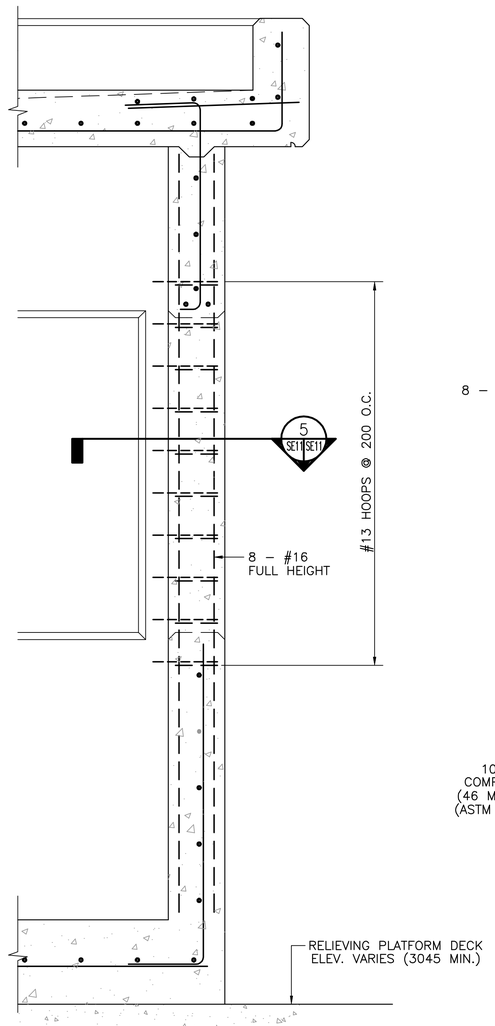

SECTION 4 (SE10/SE11)
1 : 10

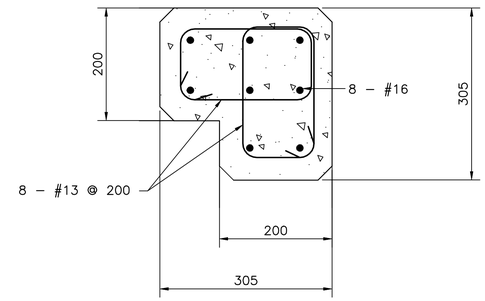

SECTION 5 (SE1/SE11)
1 : 5

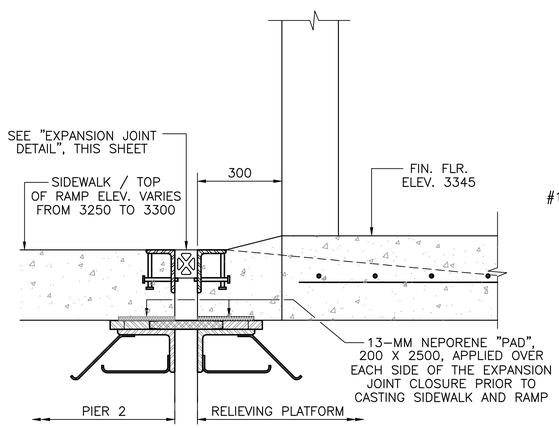

SECTION 2 (SE10/SE11)
1 : 10

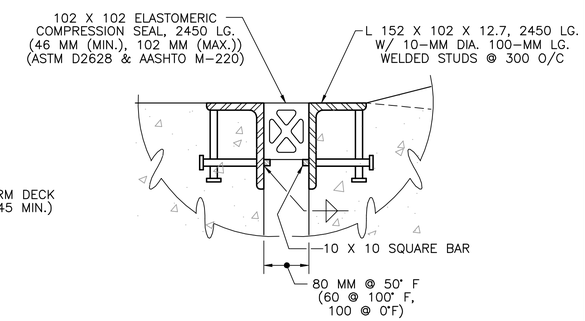

EXPANSION JOINT DETAIL
SCALE: 1:5

GRAPHIC SCALES

1:10 — 0 100 500 1000mm

1:5 — 0 100 300 500mm

JOINT DETAIL REVISED AND RAMP ELEV. MODIFIED	5/27/99

REVISIONS

SYM.	DESCRIPTION	DATE	APPROVED

DESIGNED & ENGINEERED BY: LANTDIV NAVAL FACILITIES ENGINEERING COMMAND

SEAL

APPROVED

ACTIVITY – SATISFACTORY TO

DATE

APPROVED
FOR EFD FOR COMMANDER NAVFAC
4/08/99

DATE

A/E — EFD
DESIGN HDK
DRAWN BJD
REVIEW BJD
QC
CHIEF ARCH./ ENGR.
PROJECT MANAGER DWB
FIRE PROTECTION
BRANCH MANAGER
DESIGN DIRECTOR

DEPARTMENT OF THE NAVY — NAVAL FACILITIES ENGINEERING COMMAND
NAVAL STATION — ATLANTIC DIVISION — NORFOLK, VIRGINIA
NAVAL STATION NORFOLK, VA
PIER 2 REPLACEMENT
GUARD SHACK DETAILS

CODE ID. NO. 80091 SIZE D
SCALE: AS NOTED
EFD NO. 494048
STA. PROJ. NO. P–355
SPEC. NO. 05–97–7041
CONSTR. CONTR. NO. N62470–97–B–7041
NAVFAC DRAWING NO. 4394048
SHEET 158 OF 240

SE–11

DRAWFORM REVISION 27 JULY 98

FILENAME: 7041SE11.DWG, PLOT SCALE: 1=1, SAVED ON 03/29/99 AT 23:24, XREFS: 7041SE10.DWG

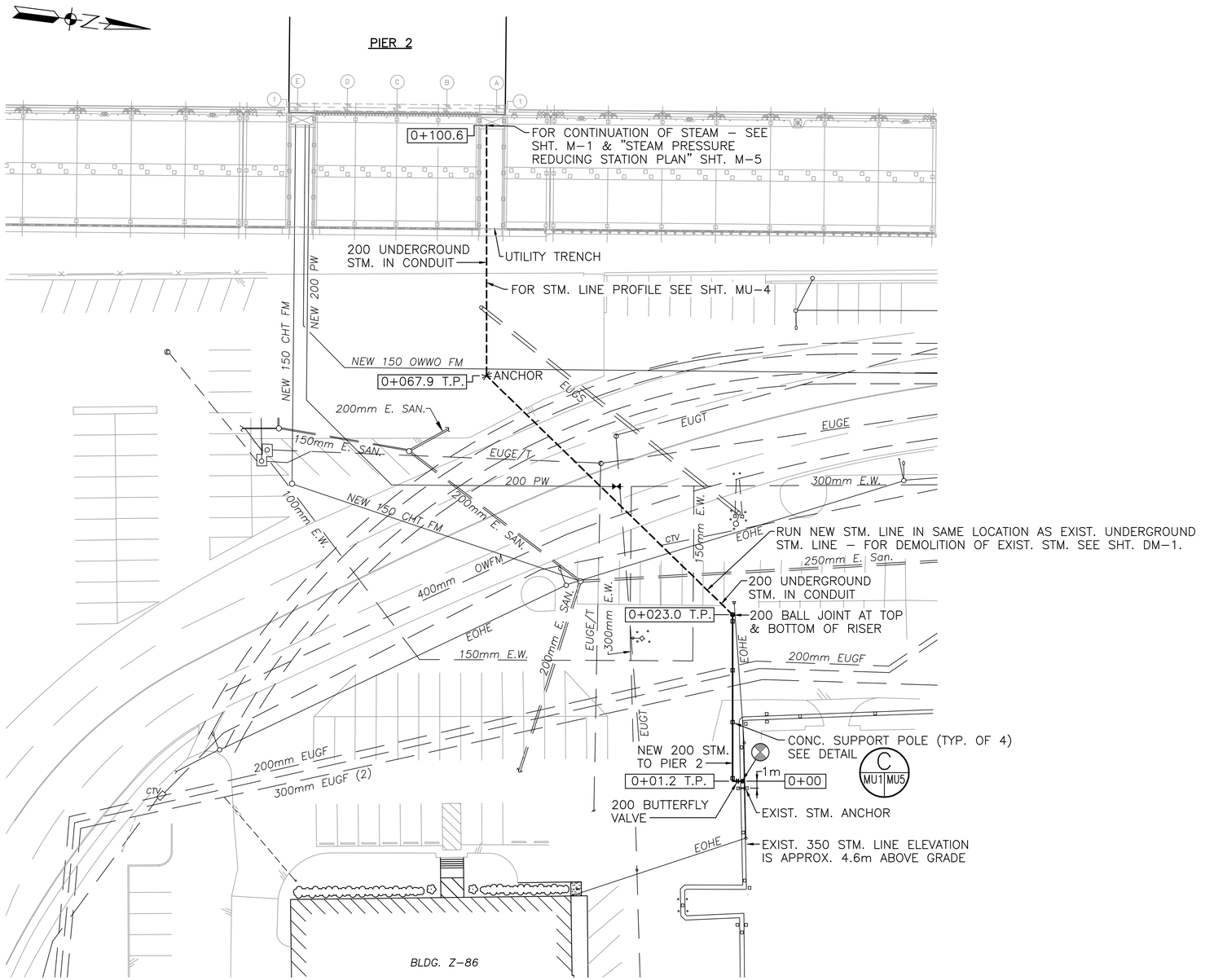

STEAM SITE PLAN

SCALE: 1:300

LEGEND (MU SHEETS ONLY)

STM.	STEAM (1723kPa)
DFM	DISTILLATE OIL
JP5	AVIATION FUEL
A	ANCHOR POINT
T.P.	TURNING POINT
EUGF	EXIST. UNDERGROUND FUEL LINE
EUGE	EXIST. UNDERGROUND ELECTRICAL
EUGT	EXIST. UNDERGROUND TELEPHONE
EOHE	EXIST. OVERHEAD ELECTRICAL
EOHS	EXIST. OVERHEAD STEAM LINE
E. SAN	EXIST. SANITARY (UNDERGROUND)
PW	NEW POTABLE WATER LINE (UNDERGROUND)
EUGS	EXIST. UNDERGROUND STEAM LINE
EUGE/T	EXIST. UNDERGROUND ELECTRICAL/TELEPHONE
E.W	EXIST. POTABLE WATER LINE (UNDERGROUND)
OWWO	OILY WATER/OILY WASTE (UNDERGROUND)
OWFM	OILY WASTE FORCE MAIN (UNDERGROUND)
FM	FORCED MAIN (UNDERGROUND)
CHT	SANITARY (UNDERGROUND)
T.P.	TURNING POINT
CTV	CABLE TELEVISION LINE (UNDERGROUND)
0+00	INDICATES STATION NUMBER
	EXIST. FUEL OIL
	EXIST. STM.
	CONNECT NEW TO EXIST. AT THIS POINT
	NEW UNDERGROUND STM. LINE (1723kPa)
	NEW ABOVEGROUND STM. LINE (1723kPa)
	BALL JOINT
	BUTTERFLY VALVE
	ANCHOR POINT
	EXIST. BITUMINOUS PAVEMENT (ASPHALT)
	LIMITS OF DEMOLITION

GENERAL NOTES:

1. UTILITIES LOCATIONS ARE APPROX. EXACT LOCATION SHALL BE VERIFIED IN THE FIELD.
2. SEE SHTS. C–12, C–14 & C–16 FOR PAVEMENT SAW CUTTING & PATCHING DETAILS.

1:300 0 5 10 20 30m

STM.	DESCRIPTION	DATE	APPROVED
	REVISED BULKHEAD AND RELIEVING PLATFORM	3/23/99	BDC

REVISIONS

DESIGNED & ENGINEERED BY: LANTDIV NAVAL FACILITIES ENGINEERING COMMAND

SEAL

APPROVED

ACTIVITY – SATISFACTORY TO

DATE

APPROVED

FOR EFD FOR COMMANDER NAVFAC

4/08/99

DATE

A/E	EFD
DESIGN	WWH
DRAWN	WWH
REVIEW	BDC
QC	
CHIEF ARCH./ ENGR.	
PROJECT MANAGER	DWB
FIRE PROTECTION	
BRANCH MANAGER	JTM
DESIGN DIRECTOR	

DEPARTMENT OF THE NAVY
NAVAL STATION
NAVAL FACILITIES ENGINEERING COMMAND
ATLANTIC DIVISION
NORFOLK, VIRGINIA
NAVAL STATION NORFOLK, VA.

PIER 2 REPLACEMENT

STEAM SITE PLAN

CODE ID. NO. 80091 | SIZE D

SCALE: AS NOTED

EFD NO. 494057

STA. PROJ. NO. P–355

SPEC. NO. 05–97–7041

CONSTR. CONTR. NO. N62470–97–B–7041

NAVFAC DRAWING NO. 4394057

SHEET 167 OF 240

MU–1

FILENAME: 7041MU1R.DWG, PLOT SCALE: 1" = 300', SAVED ON 03/25/99 AT 09:39, XREFS: NONE

DRAWFORM REVISION 27 JULY 98

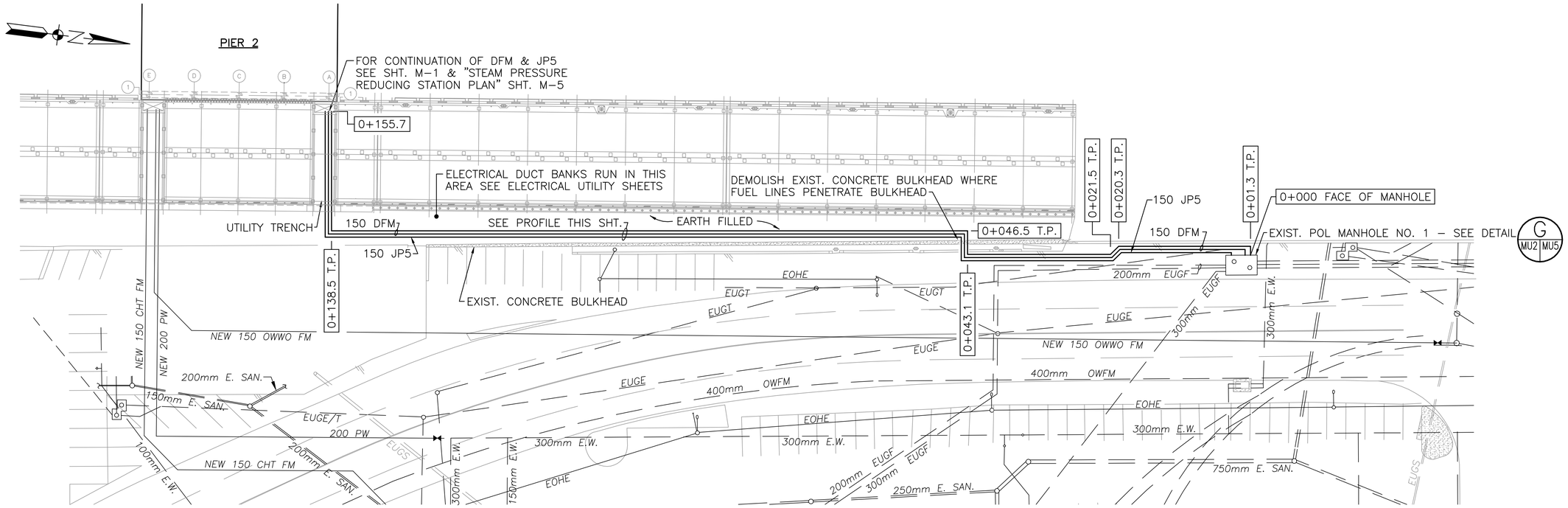

NOTE: SEE SHTS. C-12, C-14 & C-16 FOR PAVEMENT SAW CUTTING & PATCHING DETAILS.

POL PLAN – SITE 1

SCALE: 1:300

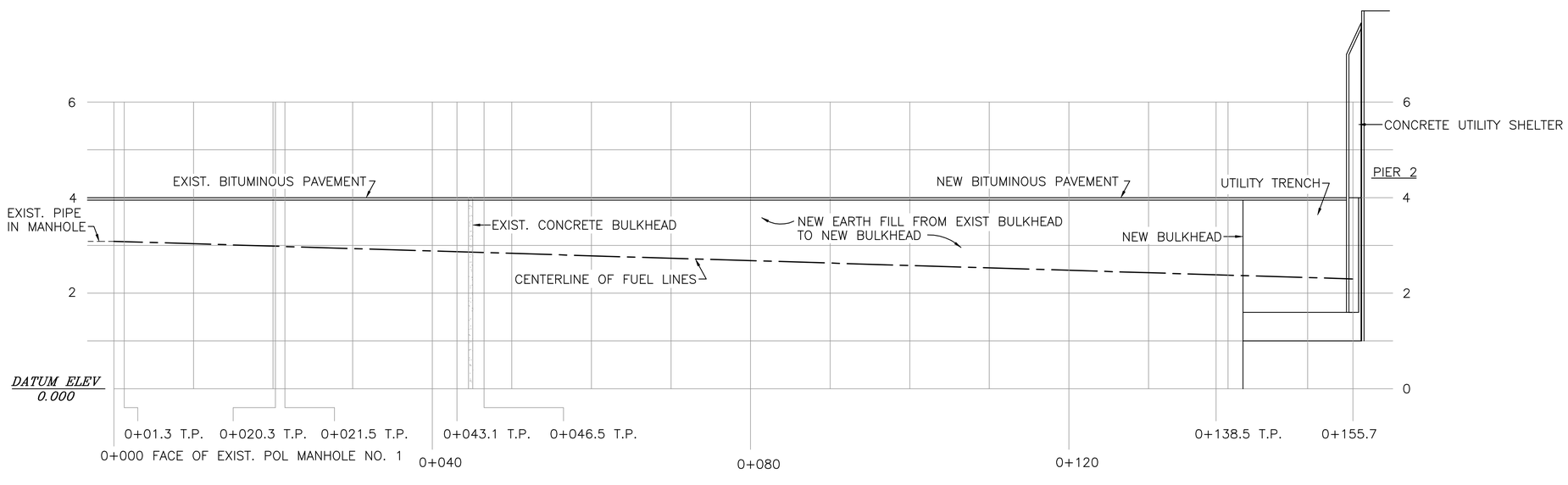

POL SITE 1 PROFILE

SCALE: HORIZ. 1:300
VERT. 1:50

1:50 0 1 3 5m

1:300 0 5 10 20 30m

SYM.	DESCRIPTION	DATE	APPROVED
	REVISED POL SITE PLAN & POL SITE 1 PROFILE	3/23/99	BDC

REVISIONS

DESIGNED & ENGINEERED BY: LANTDIV NAVAL FACILITIES ENGINEERING COMMAND

SEAL

APPROVED
ACTIVITY – SATISFACTORY TO
DATE
APPROVED
FOR EFD FOR COMMANDER NAVFAC
4/08/99
DATE

A/E	EFD
DESIGN	WWH
DRAWN	WWH
REVIEW	BDC
QC	
CHIEF ARCH./ ENGR.	
PROJECT MANAGER	DWB
FIRE PROTECTION	
BRANCH MANAGER	JTM
DESIGN DIRECTOR	

DEPARTMENT OF THE NAVY
NAVAL FACILITIES ENGINEERING COMMAND
ATLANTIC DIVISION
NAVAL STATION NORFOLK, VIRGINIA
NAVAL STATION NORFOLK, VA.
PIER 2 REPLACEMENT
POL PLAN – SITE 1

CODE ID. NO. 80091	SIZE D
SCALE:	AS NOTED
EFD NO.	494058
STA. PROJ. NO.	P-355
SPEC. NO.	05-97-7041
CONSTR. CONTR. NO.	N62470-97-B-7041
NAVFAC DRAWING NO.	4394058
SHEET	168 OF 240

MU-2

FILENAME: 7041MU2R.DWG, PLOT SCALE: 1" = 300', SAVED ON 03/25/99 AT 09:43, XREFS: NONE

DRAWFORM REVISION 27 JULY 98

CABLE SCHEDULE

CABLE ID NEW	CABLE ID EXIST	DESCRIPTION	TERMINATION POINTS AND REMARKS
	A	3-1/C 500KCMIL, 35KV	SW-228 TO EXISTING PIER 2
	S	3-2/0 ,15KV AND 1-2/0 GND	MH 239 TO BLDG Z-86. REMOVE
	W	3-#2 AND 1-#2 GND 600V	REMOVE
	R	EXISTING TELEPHONE CABLE	TO REMAIN
	Q	EXISTING TELEPHONE CABLE	REMOVE
	V	3-1/C 500KCMIL, 15KV AND 1-3/0 BARE CU GND	4.16KV FEEDER TO REMAIN.
	T	200 PAIR TELEPHONE CABLE	SPLICE EXISTING CABLE TO NEW CABLE 12 IN MH-W-79
	Z	34.5 KV FEEDER	TO REMAIN
	Y	3-1/C 750 KCMIL, 35KV	SW-213B TO NW 0-1. REMOVE FROM NW 0-1 TO MH-3366B.
	X	ABANDONED CABLE	TO REMAIN
	P	3-1/C 500 KCMIL, 15KV AND 1-3/0 BARE CU GND	MH-221 TO BLDG Z-357. REMOVE.
	M	UNIDENTIFIED CABLE	REMOVE
	K	FIRE ALARM CABLE	

CABLE WELL SCHEDULE

CABLE WELL ID	SIZE IN mm (LENGTH X WIDTH X DEPTH) *	REMARKS
1	3600 X 1500 X 500	
2	1500 X 1200 X 500	
3	2100 X 1500 X 500	
4	3600 X 1500 X 500	
5	2000 X 1220 X 500	PROVIDE COVER FOR CABLE WELL AT BENT 41 AND 62.
6	1680 X 850 X 200	
7	540 X 260 X 200	
8	1680 X 550 X 200	PROVIDE COVER FOR CABLE WELL AT SINGLE POLE SHORE POWER STATION LOCATIONS.
9	550 X 540 X 200	

* LENGTH AND WIDTH INDICATED IS THE SIZE OF THE OPENING IN THE PRE-CAST DECK. CONTRACTOR MUST COORDINATE WITH ACTUAL SIZE PROVIDED. DEPTH DIMENSION IS THE MAXIMUM ALLOWED DISTANCE BETWEEN THE BOTTOM OF THE DECK AND THE BOTTOM OF THE WELL.

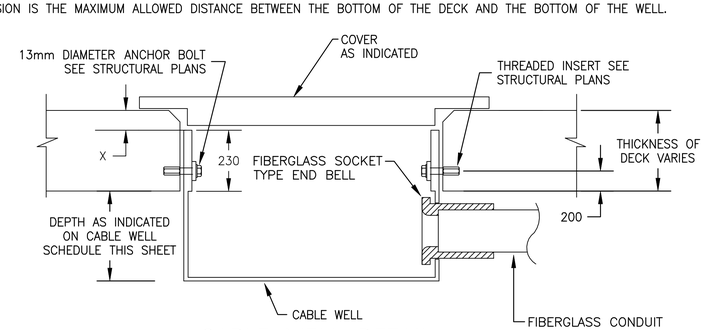

CABLE WELL DETAIL

CABLE SCHEDULE

CABLE ID NEW	CABLE ID EXIST	DESCRIPTION	TERMINATION POINTS AND REMARKS
1		3-1/C 750 KCMIL, 35KV	CIRCUIT BREAKER NW 0-1 TO SW-345PA
2		3-1/C 750 KCMIL, 35KV	CIRCUIT BREAKER NW 0-13 TO SW-345E
2A		3-1/C 750 KCMIL, 35KV	SW-345PA TO SW-345W
2B		3-1/C 750 KCMIL, 35KV	SW-345W TO SW-345T
2C		3-1/C 750 KCMIL, 35KV	SW-345E TO SW-345T
3		3-1/C 750 KCMIL, 35KV	CIRCUIT BREAKER NW 0-9 TO MH-3366B
4		3-4/0 35KV AND 1-4/0 BARE GROUND	PIER 2 UNIT SUBSTATION FEEDER
5		3-4/0 35 KV AND 1-4/0 BARE GROUND	SW-345T TO TRANSFORMER TE
6		3-4/0 35 KV AND 1-4/0 BARE GROUND	SW-345T TO TRANSFORMER TW
7A		3-1/C 444 KCMIL, 2000V AND 1 #2 BARE GROUND	SHORE POWER PORTABLE POWER CABLE
7B		3-1/C 444 KCMIL, 2000V	SHORE POWER PORTABLE POWER CABLE
8		3-1/C 700 KCMIL, 600V AND 1 #2 BARE GROUND	SHORE POWER STATION FEEDER CABLE. SEE SHEETS E-6 & E-7 AND SYMBOLS 8A, 8B, 8C, 8D AND 8E FOR FURTHER DEFINITION.
8A		SEE CABLE 8	SEE SHEETS E-6 & E-7 FOR TERMINATION POINTS
8B		SEE CABLE 8	SEE SHEETS E-6 & E-7 FOR TERMINATION POINTS
8C		SEE CABLE 8	SEE SHEETS E-6 & E-7 FOR TERMINATION POINTS
8D		SEE CABLE 8	SEE SHEETS E-6 & E-7 FOR TERMINATION POINTS
8E		SEE CABLE 8	SEE SHEETS E-6 & E-7 FOR TERMINATION POINTS
9A		4-1/C 700 KCMIL, 600V	TRANSFORMER TE TO PANELBOARD SE
9B		4-1/C 700 KCMIL, 600V	TRANSFORMER TE TO PANELBOARD NE
9C		4-1/C 700 KCMIL, 600V	TRANSFORMER TW TO PANELBOARD NW
9D		4-1/C 700 KCMIL, 600V	TRANSFORMER TW TO PANELBOARD SW
10		3-1/C 700 KCMIL, AND 1-#2 BARE GROUND	INDUSTRIAL POWER STATION FEEDER CABLE
11		FIBER OPTIC CABLES	12 STRAND MULTIMODE AND 12 STRAND SINGLE MODE HYBRID FIBER OPTIC CABLE.
12		400 PAIR TELEPHONE CABLE	SERVICE ENTRANCE TO MDF
13		106 PAIR TELEPHONE CABLE (T1 RATED) AND 1-#6 GND	MDF TO COMMUNICATIONS PANEL
14		2-#8 AWG	FIRE ALARM SERVICE
15		2-#10	FIRE ALARM SIGNAL
16		4 PAIR TELEPHONE CABLE	MDF TO PUMP STATION
17		2/C #14	MULTICONDUCTOR CONTROL CABLE
18		30/C #14	MULTICONDUCTOR CONTROL CABLE
19		3 #2	NW STATION SERVICE TRANSFORMER TO PANELBOARD PA2
20		4/C #12	NW POTENTIAL TRANSFORMERS
21		CABLES 21A, 21B, 21C, & 21D.	NW VACUUM POWER CIRCUIT BREAKERS
21A		1-8/C #10, 600V	CURRENT TRANSFORMERS
21B		1-7/C #12, 600V	BREAKER CONTROL
21C		1-2/C #10, 600V	125 VDC POWER
21D		1-3/C #12, 600V	240VAC POWER & GROUND
22		2-4 PAIR TELEPHONE CABLES	MDF TO GUARD ROOM OUTLET

REVISIONS

SYM.	DESCRIPTION	DATE	APPROVED
	REVISED DIMENSIONS ON CABLE WELL DETAIL	3/99	PD

DESIGNED & ENGINEERED BY: LANTDIV NAVAL FACILITIES ENGINEERING COMMAND

SEAL

APPROVED

ACTIVITY - SATISFACTORY TO

DATE

APPROVED

FOR EFD FOR COMMANDER NAVFAC

DATE 4/08/99

A/E EFD

DESIGN DE/PD

DRAWN LDS

REVIEW HTO

QC

CHIEF ARCH./ ENGR.

PROJECT MANAGER DWB

FIRE PROTECTION

BRANCH MANAGER

DESIGN DIRECTOR

DEPARTMENT OF THE NAVY NAVAL FACILITIES ENGINEERING COMMAND

NAVAL STATION ATLANTIC DIVISION NORFOLK, VIRGINIA

NAVAL STATION NORFOLK, VA

PIER 2 REPLACEMENT

CABLE AND CABLE WELL SCHEDULES

CODE ID. NO. 80091 SIZE D

SCALE: NONE

EFD NO. 494077

STA. PROJ. NO. P-355

SPEC. NO. 05-97-7041

CONSTR. CONTR. NO. N62470-97-B-7041

NAVFAC DRAWING NO. 4394077

SHEET 187 OF 240

EU-4

FILENAME: 7041EU004.DWG, PLOT SCALE: 1=1, SAVED ON 03/22/99 AT 10:39, XREFS: NONE

DRAWFORM REVISION 27 JULY 98

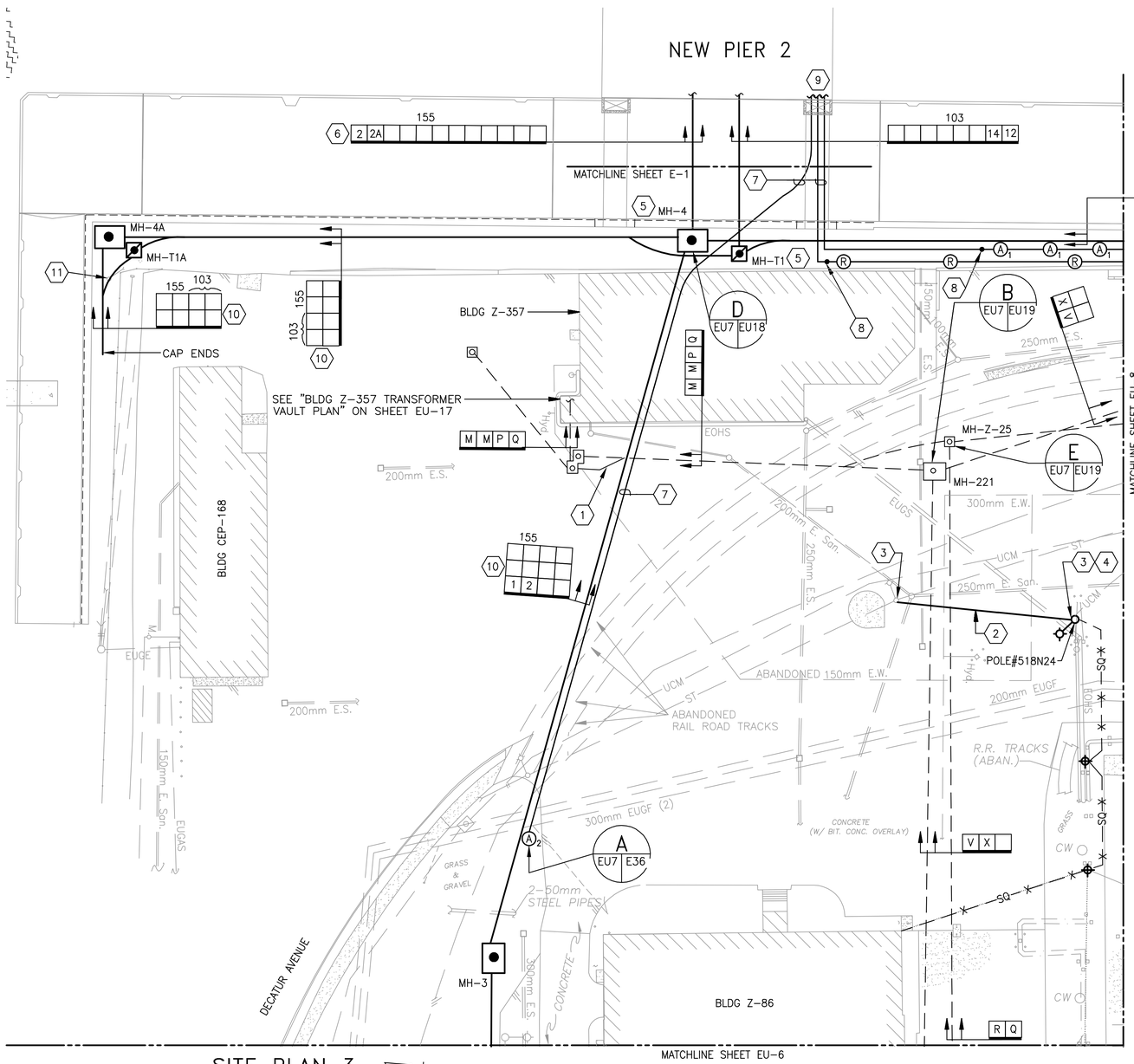

SITE PLAN 3

SCALE: 1:300

WORK NOTES

1. REMOVE EXISTING DUCTBANKS AS NEEDED TO ALLOW FOR NEW DUCTBANK.
2. PROVIDE 240 VOLT SECONDARY DUPLEX CIRCUIT, #4 INSULATED ALUMINUN PHASE CONDUCTOR WITH #4 BARE ALUMINUM NEUTRAL CONDUCTOR. CONNECT EXISTING STREET LIGHTING AND NAVIGATION LIGHTING CIRCUITS FOR 240 SERVICE ON THE EXISTING 240/480 VOLT STREET LIGHTING CIRCUIT.
3. PROVIDE HARDWARE AS SHOWN ON "ST-SLACK, DETAIL" ON SHEET EU-21.
4. REMOVE DISCONNECT SWITCH FOR UNDERGROUND CAMERA MONITORING CIRCUIT, INCLUDING CONDUIT, WIRE AND WEATHERHEAD.
5. COORDINATE MANHOLE LOCATION WITH SHEET C-12.
6. EMBED 4/0 GND IN BOTTOM DECK SEE SHEET E-1.
7. DIRECT BURY GRS CONDUIT 610MM BFG.
8. END CONDUIT RUN. SEAL END OF CONDUIT FOR CONTINUATION OF DIRECT BURIED CONDUCTORS.
9. SEE SHEET E-35 FOR CONTINUATION.
10. REINFORCE DUCTBANK.
11. REMOVE DISCONNECT SWITCH AND ASSOCIATED WIRING.

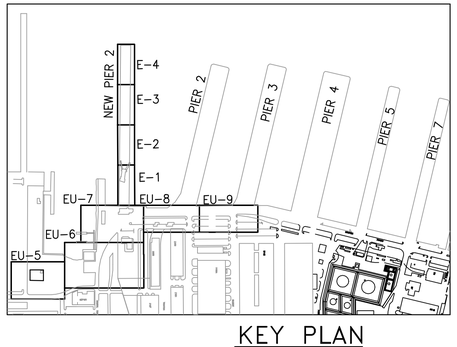

KEY PLAN

GRAPHIC SCALE

1:300 0 5 10 20 30m

1:100 0 1000 5000 10000mm

SYM.	DESCRIPTION	DATE	APPROVED
	REVISED DUCTBANK ROUTING ALONG BULKHEAD	3/99	PD

REVISIONS

DESIGNED & ENGINEERED BY: LANTDIV NAVAL FACILITIES ENGINEERING COMMAND

SEAL

APPROVED

ACTIVITY – SATISFACTORY TO

DATE

APPROVED

FOR EFD FOR COMMANDER NAVFAC

4/08/99

DATE

A/E	EFD
DESIGN	PD
DRAWN	LDS
REVIEW	HTO
QC	
CHIEF ARCH./ ENGR.	
PROJECT MANAGER	DWB
FIRE PROTECTION	
BRANCH MANAGER	PGH
DESIGN DIRECTOR	

DEPARTMENT OF THE NAVY — NAVAL FACILITIES ENGINEERING COMMAND — ATLANTIC DIVISION — NAVAL STATION NORFOLK, VIRGINIA

NAVAL STATION NORFOLK, VA

PIER 2 REPLACEMENT

SITE PLAN 3

CODE ID. NO. 80091	SIZE D
SCALE:	AS NOTED
EFD NO.	494080
STA. PROJ. NO.	P-355
SPEC. NO.	05-97-7041
CONSTR. CONTR. NO.	N62470-97-B-7041
NAVFAC DRAWING NO.	4394080
SHEET	190 OF 240

EU-7

DRAWFORM REVISION 27 JULY 98

FILENAME: 7041EU007.DWG, PLOT SCALE: 1=1, SAVED ON 03/22/99 AT 10:48, XREFS: 7041EX04.DWG

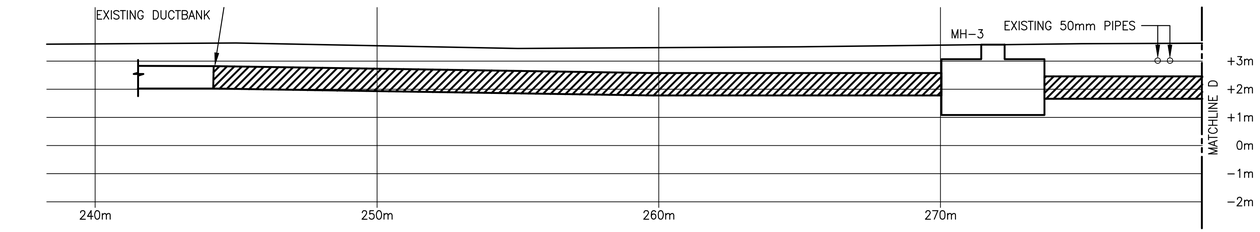

WORK NOTES

1. PROVIDE EQUIPMENT AS SHOWN ON "POLE #518C20 ELEVATION" ON SHEET EU-21.
2. PAD-MOUNTED SWITCH SEE "PAD-MOUNTED SWITCH SW-345PA GROUNDING PLAN" ON SHEET EU-21.
3. COORDINATE LOCATION OF MANHOLE WITH NEW FUEL LINES.
4. DIRECT BURY GRS CONDUIT.
5. REINFORCE DUCTBANK.

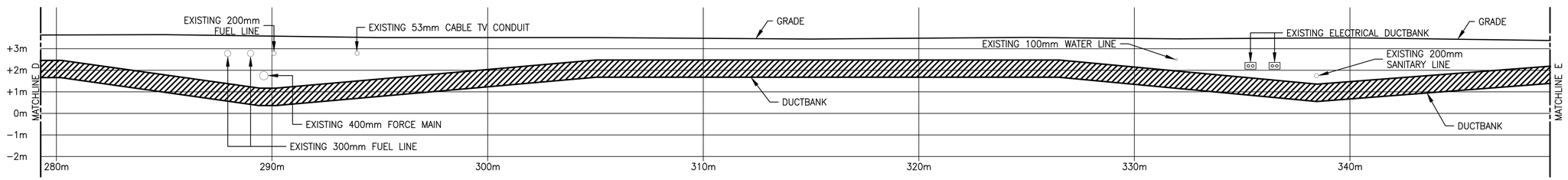

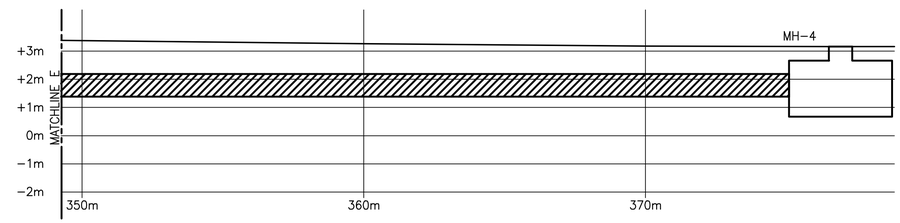

DUCTBANK PROFILES

SCALE: 1:100

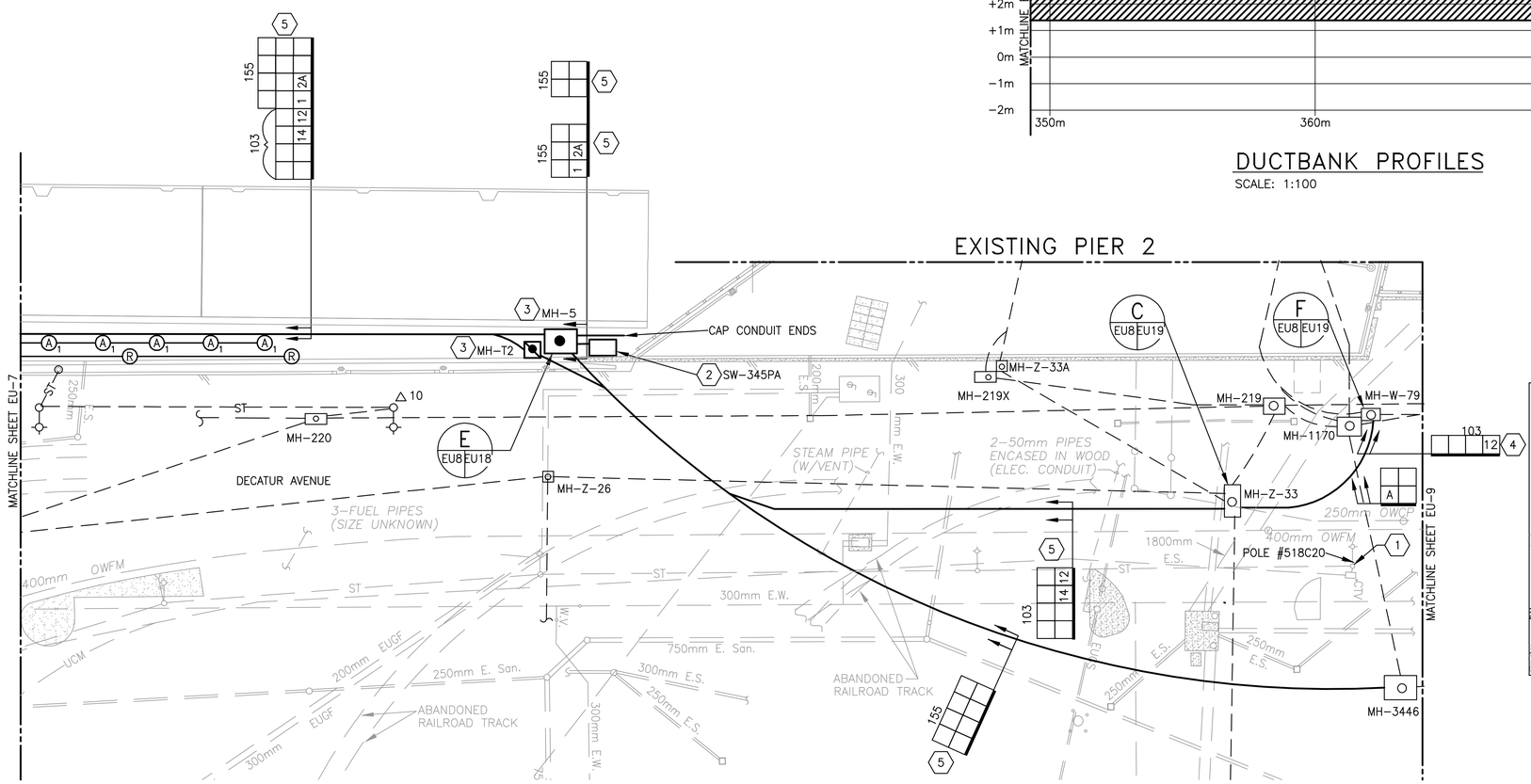

SITE PLAN 4

SCALE: 1:300

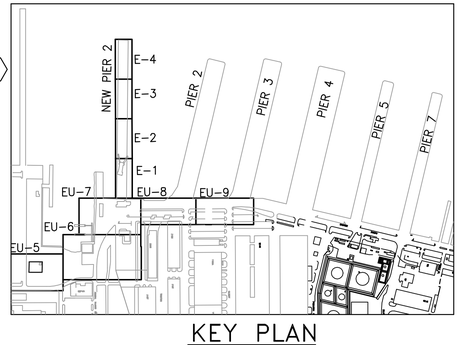

KEY PLAN

GRAPHIC SCALE

1:100 — 0 1000 5000 10000mm

1:300 — 0 5 10 20 30m

REVISED DUCTBANK ROUTING AND LOCATION OF SW-345PA ALONG BULKHEAD	PD	3/99	

REVISIONS

DESIGNED & ENGINEERED BY: LANTDIV NAVAL FACILITIES ENGINEERING COMMAND

SEAL

APPROVED

ACTIVITY – SATISFACTORY TO

DATE

APPROVED FOR EFD FOR COMMANDER NAVFAC 4/08/99

DATE

A/E	EFD
DESIGN	PD
DRAWN	LDS
REVIEW	HTO
QC	
CHIEF ARCH./ ENGR.	
PROJECT MANAGER	DWB
FIRE PROTECTION BRANCH MANAGER	
DESIGN DIRECTOR	

DEPARTMENT OF THE NAVY — NAVAL FACILITIES ENGINEERING COMMAND — ATLANTIC DIVISION — NORFOLK, VIRGINIA

NAVAL STATION — NAVAL STATION NORFOLK, VA

PIER 2 REPLACEMENT

SITE PLAN 4

CODE ID. NO. 80091	SIZE D
SCALE: AS NOTED	
EFD NO. 494081	
STA. PROJ. NO. P-355	
SPEC. NO. 05-97-7041	
CONSTR. CONTR. NO. N62470-97-B-7041	
NAVFAC DRAWING NO. 4394081	
SHEET 191 OF 240	

EU-8

DRAWFORM REVISION 27 JULY 98

FILENAME: 7041EU008.DWG, PLOT SCALE: 1=1, SAVED ON 01/07/99 AT 15:52, XREFS: 7041EX04.DWG

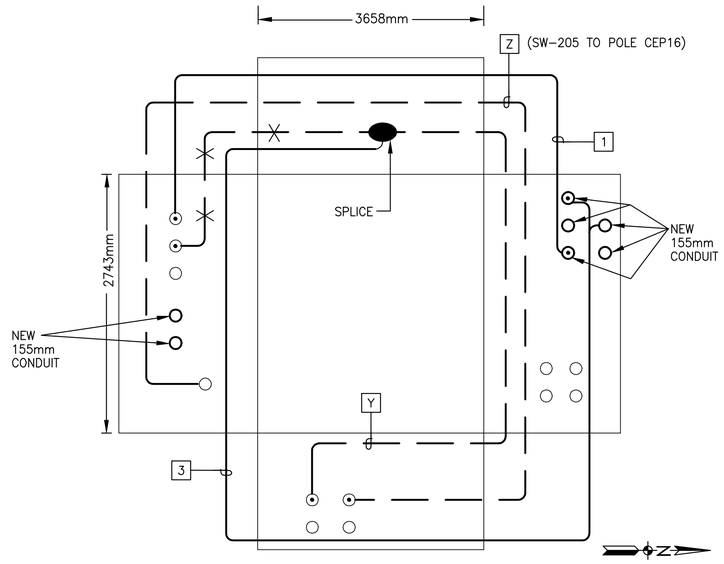

A EU10 EU18 EXISTING MANHOLE – 3366B EXPLODED VIEW

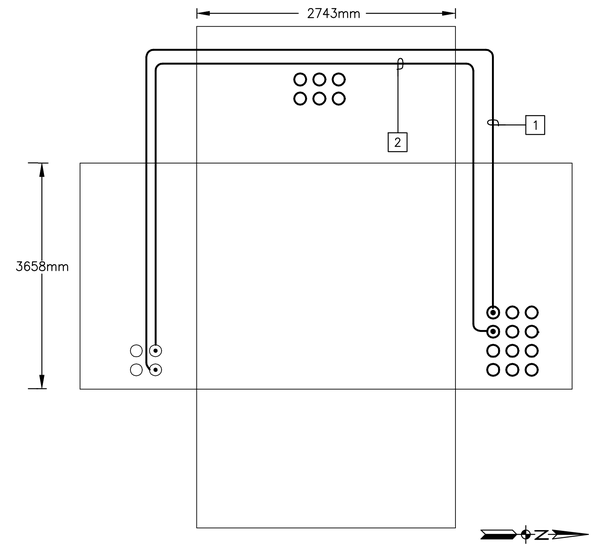

B EU10 EU18 MANHOLE D EXPLODED VIEW

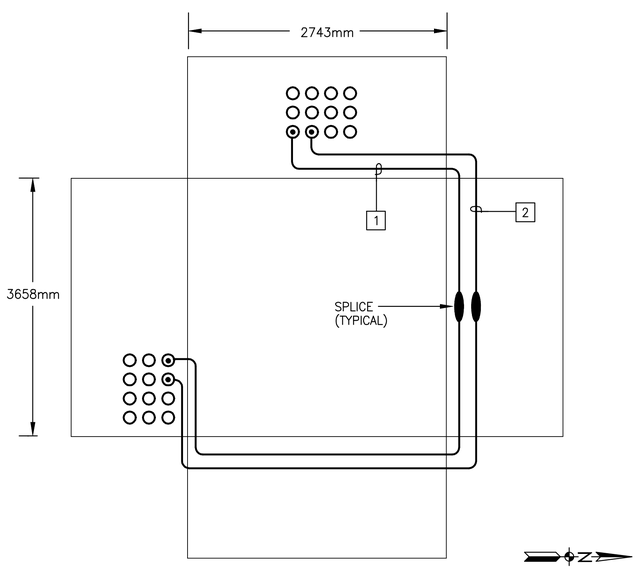

C EU6 EU18 MANHOLE 2 EXPLODED VIEW

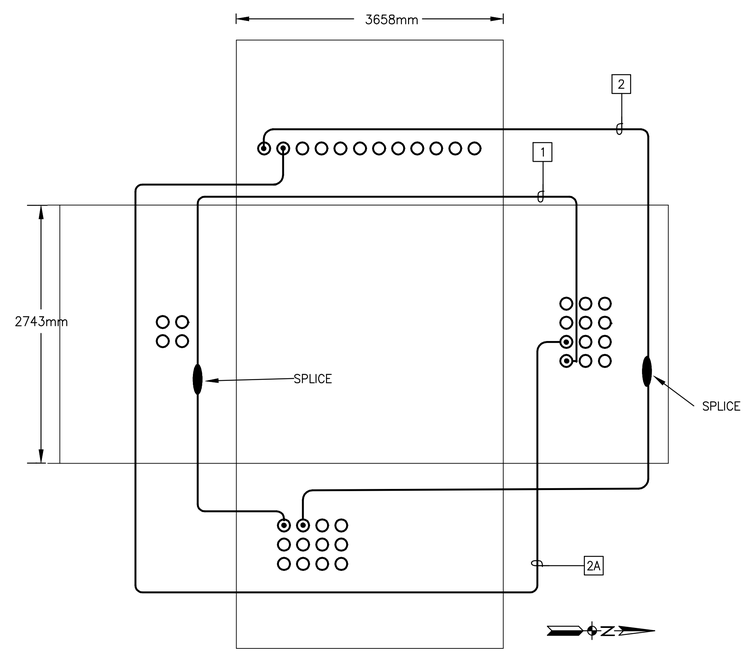

D EU7 EU18 MANHOLE 4 EXPLODED VIEW

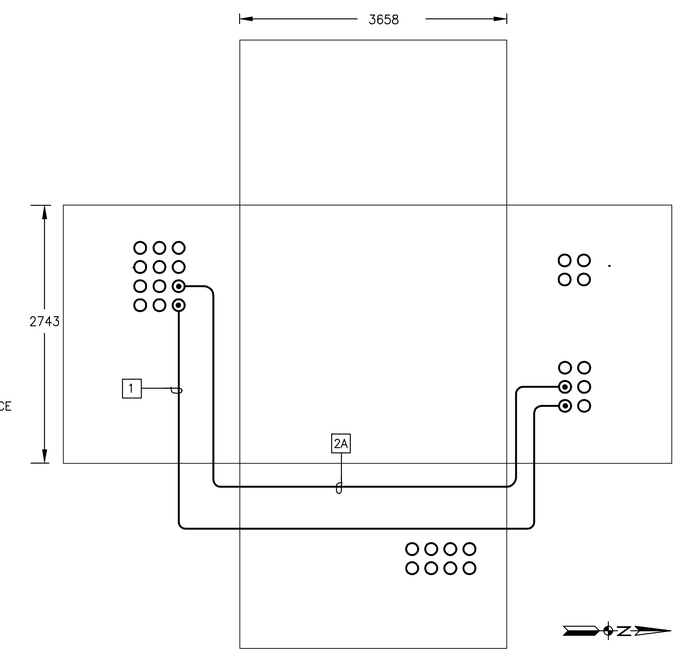

E EU8 EU18 MANHOLE 5 EXPLODED VIEW

REVISIONS				
SYM.	DESCRIPTION	DATE	APPROVED	
	REVISED MANHOLE 5 EXPLODED VIEW	3/99	PD	

DESIGNED & ENGINEERED BY: LANTDIV NAVAL FACILITIES ENGINEERING COMMAND

SEAL

APPROVED

ACTIVITY – SATISFACTORY TO

DATE

APPROVED

FOR EFD FOR COMMANDER NAVFAC

DATE 4/08/99

	A/E	EFD
DESIGN		PD
DRAWN		LDS
REVIEW		HTO
QC		
CHIEF ARCH./ ENGR.		
PROJECT MANAGER		DWB
FIRE PROTECTION		
BRANCH MANAGER		PGS
DESIGN DIRECTOR		

DEPARTMENT OF THE NAVY
NAVAL STATION
ATLANTIC DIVISION
NAVAL FACILITIES ENGINEERING COMMAND
NORFOLK, VIRGINIA

NAVAL STATION NORFOLK, VA

PIER 2 REPLACEMENT

POWER MANHOLE EXPLODED VIEWS

CODE ID. NO. 80091 SIZE D

SCALE: NONE

EFD NO. 494091

STA. PROJ. NO. P-355

SPEC. NO. 05-97-7041

CONSTR. CONTR. NO. N62470-97-B-7041

NAVFAC DRAWING NO. 4394091

SHEET 201 OF 240

EU-18

FILENAME: 7041EU018.DWG, PLOT SCALE: 1=1, SAVED ON 12/23/98 AT 11:13, XREFS: NONE

DRAWFORM REVISION 27 JULY 98