PIER 3 REPLACEMENT

NAVAL STATION — NORFOLK, VA

DRAWING INDEX

PAGE NO.	SHEET NO.	NAVFAC DWG NO	SHEET TITLE	PAGE NO.	SHEET NO.	EFD DWG NO	SHEET TITLE	PAGE NO.	SHEET NO.	NAVFAC DWG NO	SHEET TITLE
1	T–1	4439552	TITLE SHEET – DRAWING INDEX	53	C–2	4439604	NEW PIER 3 AND RELIEVING PLATFORM LAYOUT PLANS	105	SB–1	4439656	EDGE CAP AND PILE CAP INSTALLATION DETAILS
2	T–2	4439553	VICINITY AND LOCATION MAPS – DRAWING INDEX (CONT.)	54	C–3	4439605	EXISTING UTILITY STRUCTURE DATA AND SURVEY NOTES	106	SB–2	4439657	EDGE BEAM INSTALLATION DETAILS
3	DS–1	4439554	DEMOLITION PLAN AND NOTES – EXISTING PIER 2	55	C–4	4439606	EXISTING SITE 3 DEMOLITION PLAN (1 OF 2)	107	SB–3	4439658	PIER END CLOSURE DETAILS
4	DS–2	4439555	EXISTING PIER 2 DEMOLITION PARTIAL PLAN – INSHORE END – BENT 85	56	C–5	4439607	EXISTING SITE 3 DEMOLITION PLAN (2 OF 2)	108	SB–4	4439659	LOWER DECK CLOSURE DETAILS
5	DS–3	4439556	EXISTING PIER 2 DEMOLITION PARTIAL PLAN – BENTS 85 – 59	57	C–6	4439608	NEW SITE LAYOUT PLAN (1 OF 2)	109	SB–5	4439660	LOWER DECK SLAB INSTALLATION DETAILS
6	DS–4	4439557	EXISTING PIER 2 DEMOLITION PARTIAL PLAN – BENTS 59 – 33	58	C–7	4439609	NEW SITE LAYOUT PLAN (2 OF 2)	110	SB–6	4439661	BATTER PILE CAP AND SHEAR KEY DETAILS
7	DS–5	4439558	EXISTING PIER 2 DEMOLITION PARTIAL PLAN – BENT – 33 – OFFSHORE END	59	C–8	4439610	NEW SITE GRADING PLAN (1 OF 2)	111	SB–7	4439662	LOWER DECK UTILITY CURB DETAILS
8	DS–6	4439559	TYPICAL SECTION – EXISTING PIER 2	60	C–9	4439611	NEW SITE GRADING PLAN (2 OF 2)	112	SB–8	4439663	PIER–END CURB–MISC. LOWER DECK CONCRETE DETAILS
9	DS–7	4439560	PIER 2 UTILITIES DEMOLITION PLAN	61	C–10	4439612	NEW SITE UTILITY PLAN (1 OF 2)	113	SB–9	4439664	ELECTRICAL EQUIPMENT SUPPORT DETAILS
10	DS–8	4439561	DEMOLITION PLAN AND NOTES – EXISTING PIER 3	62	C–11	4439613	NEW SITE UTILITY PLAN (2 OF 2)	114	SB–10	4439665	LIFT STATION INSTALLATION DETAILS
11	DS–9	4439562	EXISTING PIER 3 DEMOLITION PARTIAL PLAN – INSHORE END – BENT 85	63	C–12	4439614	RELIEVING PLATFORM SITE DEMOLITION AND LAYOUT PLANS	115	SB–11	4439666	EDGE PANEL INSTALLATION – PIPE HANGER DETAILS
12	DS–10	4439563	EXISTING PIER 3 DEMOLITION PARTIAL PLAN – BENTS 85 – 59	64	C–13	4439615	UTILITY DETAILS	116	SC–1	4439667	LOWER DECK PLANS
13	DS–11	4439564	EXISTING PIER 3 DEMOLITION PARTIAL PLAN – BENTS 59 – 33	65	C–14	4439616	PAVEMENT DETAILS	117	SC–2	4439668	UPPER DECK PLANS
14	DS–12	4439565	EXISTING PIER 3 DEMOLITION PARTIAL PLAN – BENT 33 – OFFSHORE END	66	C–15	4439617	MISCELLANEOUS DETAILS	118	SC–3	4439669	COLUMNS
15	DS–13	4439566	TYPICAL SECTION – EXISTING PIER 3	67	C–16	4439618	UTILITY PROFILES	119	SC–4	4439670	COLUMNS
16	DS–14	4439567	PIER 3 UTILITIES DEMOLITION PLAN	68	B–1	4439619	BORINGS 1 AND 2	120	SC–5	4439671	LOWER DECK ENCLOSURES
17	DM–1	4439568	STEAM LINE DEMOLITION SITE PLAN	69	B–2	4439620	BORINGS 3 AND 4	121	SC–6	4439672	ENCLOSURE ELEVATIONS AND DETAILS
18	DE–1	4439569	PIER 2 34.5KV ONE–LINE DIAGRAM – DEMOLITION	70	B–3	4439621	BORINGS 5, 6, AND 7	122	SC–7	4439673	BOLLARD PLATFORMS
19	DE–2	4439570	PIER 2 AND 3 11.5KV ONE–LINE DIAGRAM – DEMOLITION	71	B–4	4439622	BORINGS 8, 9, 10, AND 11	123	SC–8	4439674	UPPER DECK BEAMS
20	DE–3	4439571	PIER 2 DEMOLITION PLAN 1	72	B–5	4439623	BORINGS 12, 13, 14, AND 15	124	SC–9	4439675	UPPER DECK BEAMS
21	DE–4	4439572	PIER 2 DEMOLITION PLAN 2	73	B–6	4439624	BORINGS 16 AND 17	125	SC–10	4439676	SECTIONS
22	DE–5	4439573	PIER 2 DEMOLITION PLAN 3	74	B–7	4439625	BORINGS 18 AND 19 AND NOTES	126	SC–11	4439677	RAMP SECTIONS AND SIDEWALK DETAILS
23	DE–6	4439574	PIER 2 DEMOLITION PLAN 4	75	S–1	4439626	GENERAL NOTES / PLAN LEGEND	127	SC–12	4439678	SECTIONS AND PRECAST SLAB DETAILS
24	DE–7	4439575	ELECTRICAL VAULT PLANS – OLD PIER 2	76	S–2	4439627	PARTIAL PLAN – PIER 3 (INSHORE END – BENT 20)	128	SC–13	4439679	TYPICAL DETAILS
25	DE–8	4439576	ELECTRICAL VAULT PLANS – OLD PIER 2	77	S–3	4439628	PARTIAL PLAN – PIER 3 (BENTS 21 – 40)	129	SC–14	4439680	DETAILS
26	DE–9	4439577	PIER 3 DEMOLITION PLAN 1	78	S–4	4439629	PARTIAL PLAN – PIER 3 (BENTS 41 – 60)	130	SD–1	4439681	UPPER DECK BOLLARD AND BOLLARD PAD DETAILS
27	DE–10	4439578	PIER 3 DEMOLITION PLAN 2	79	S–5	4439630	PARTIAL PLAN – PIER 3 (BENT 61 – OFFSHORE END)	131	SD–2	4439682	LOWER DECK / RELIEVING PLATFORM FITTING DETAILS
28	DE–11	4439579	PIER 3 DEMOLITION PLAN 3	80	S–6	4439631	TYPICAL LATERAL PIER SECTION	132	SD–3	4439683	RAILING DETAILS
29	DE–12	4439580	PIER 3 DEMOLITION PLAN 4	81	S–7	4439632	LATERAL PIER SECTION AT BOLLARD PLATFORMS	133	SD–4	4439684	CORNER, END, AND RAIL FENDER MOUNTING DETAILS
30	DE–13	4439581	ELECTRICAL VAULT PLANS – OLD PIER 3	82	S–8	4439633	LATERAL PIER SECTION THROUGH INSHORE END	134	SD–5	4439685	CORNER AND END FENDER FABRICATION DETAILS
31	ER–1	4439582	ASBESTOS NOTES AND DETAILS	83	S–9	4439634	DETAIL – LOWER DECK EDGE	135	SD–6	4439686	RAIL FENDER FABRICATION DETAILS
32	ER–2	4439583	ASBESTOS ABATEMENT TRANSIT SHED Z2	84	S–10	4439635	DETAIL – LOWER DECK EDGE AT SHIP POWER STATION	136	SD–7	4439687	FENDER SYSTEM DETAILS
33	ER–3	4439584	ASBESTOS ABATEMENT TRANSIT SHED Z2	85	S–11	4439636	DETAIL – LOWER DECK EDGE AT SHIP POWER STATION	137	SD–8	4439688	LADDER AND FOAM–FILLED FENDER DETAILS
34	ER–4	4439585	ASBESTOS ABATEMENT TRANSIT SHED Z2	86	S–12	4439637	DETAIL – LOWER DECK EDGE AT INSHORE END	138	SD–9	4439689	PIPE SUPPORT DETAILS
35	ER–5	4439586	TYPICAL SECTION TRANSIT SHED Z2	87	S–13	4439638	LONGITUDINAL SECTION AT VEHICLE RAMP	139	SD–10	4439690	PIPE SUPPORT DETAILS
36	ER–6	4439587	ASBESTOS ABATEMENT BUILDING Z86	88	S–14	4439639	LONGITUDINAL SECTION AT LOWER DECK ENTRANCE	140	SD–11	4439691	VEHICLE RAMP GATE DETAILS
37	ER–7	4439588	ASBESTOS ABATEMENT BUILDING Z86	89	S–15	4439640	DETAILS – OFFSHORE END AND EXPANSION JOINTS	141	SD–12	4439692	CHAIN LINK FENCE PLANS AND DETAILS
38	ER–8	4439589	ASBESTOS ABATEMENT BUILDING Z86	90	S–16	4439641	OFFSHORE STAIRWELL AND SPLICE BOX ENCLOSURE DETAILS	142	SD–13	4439693	ELECTRICAL SUBSTATION DOLLY ASSEMBLY
39	ER–9	4439590	ASBESTOS ABATEMENT BUILDING Z86	91	S–17	4439642	DETAIL – ELEVATED BOLLARD PLATFORMS	143	SD–14	4439694	PIER MARKINGS AND SIGNS
40	ER–10	4439591	ASBESTOS ABATEMENT TRANSIT SHED Z3	92	SA–1	4439643	PRECAST, PRESTRESSED CONCRETE PILE DETAILS	144	SE–1	4439695	RELIEVING PLATFORM – PARTIAL PLAN
41	ER–11	4439592	ASBESTOS ABATEMENT TRANSIT SHED Z3	93	SA–2	4439644	PRECAST CONCRETE EDGE CAP DETAILS	145	SE–2	4439696	RELIEVING PLATFORM – PARTIAL PLAN
42	ER–12	4439593	ASBESTOS ABATEMENT TRANSIT SHED Z3	94	SA–3	4439645	PRECAST CONCRETE PILE CAP LAYOUT PLAN	146	SE–3	4439697	E – W RELIEVING PLATFORM – PARTIAL PLAN
43	ER–13	4439594	ASBESTOS ABATEMENT TRANSIT SHED Z3	95	SA–4	4439646	PRECAST CONCRETE PILE CAP DETAILS AND SECTIONS	147	SE–4	4439698	TYPICAL RELIEVING PLATFORM SECTIONS
44	ER–14	4439595	ASBESTOS ABATEMENT TRANSIT SHED Z3	96	SA–5	4439647	PRECAST CONCRETE PILE CAP HAUNCH DETAILS	148	SE–5	4439699	RELIEVING PLATFORM BULKHEAD DETAILS
45	ER–15	4439596	ASBESTOS ABATEMENT TRANSIT SHED Z3	97	SA–6	4439648	PILE CAP SHEAR KEY DETAILS	149	SE–6	4439700	RELIEVING PLATFORM PRECAST SLAB DETAILS
46	ER–16	4439597	FRONT ELEVATION AND TYPICAL SECTIONS – TRANSIT SHED Z3	98	SA–7	4439649	PRECAST CONCRETE BEAM DETAILS	150	SE–7	4439701	RELIEVING PLATFORM REINFORCING DETAILS
47	ER–17	4439598	PCB LIGHT BALLAST AND MERCURY LIGHT TUBE REMOVAL TRANSIT SHED Z2 (PFP)	99	SA–8	4439650	PRECAST CONCRETE BEAM DETAILS	151	SE–8	4439702	RELIEVING PLATFORM UTILITY TRENCH DETAILS
48	ER–18	4439599	PCB LIGHT BALLAST AND MERCURY LIGHT TUBE REMOVAL BUILDING Z86 (1ST)	100	SA–9	4439651	PRECAST CONCRETE BEAM AND EDGE PANEL DETAILS	152	SE–9	4439703	RELIEVING PLATFORM FENDER SYSTEM DETAILS
49	ER–19	4439600	PCB LIGHT BALLAST AND MERCURY LIGHT TUBE REMOVAL BUILDING Z86 (2ND)	101	SA–10	4439652	LOWER DECK PRECAST CONCRETE SLAB LAYOUT PLAN	153	SE–10	4439704	RELIEVING PLATFORM FENDER SYSTEM DETAILS
50	ER–20	4439601	PCB LIGHT BALLAST AND MERCURY LIGHT TUBE REMOVAL TRANSIT SHED Z3 (PFP)	102	SA–11	4439653	PRECAST CONCRETE SLAB DETAILS	154	SE–11	4439705	GUARD SHACK PLANS, NOTES, AND ELEVATIONS
51	ER–21	4439602	PCB LIGHT BALLAST AND MERCURY LIGHT TUBE REMOVAL TRANSIT SHED Z3 (PFP)	103	SA–12	4439654	PRECAST CONCRETE SLAB OPENING DETAILS	155	SE–12	4439706	GUARD SHACK DETAILS
52	C–1	4439603	CIVIL LEGEND, NOTES AND ABBREVIATIONS	104	SA–13	4439655	PRECAST CONCRETE SLAB OPENING – LIFT STATION DETAILS	156	SF–1	4439707	LHD MOORING ARRANGEMENTS

REVISIONS — SYM | DESCRIPTION | DATE | APPROVED

DESIGNED & ENGINEERED BY: LANTDIV NAVAL FACILITIES ENGINEERING COMMAND

SEAL

APPROVED S.L. HAWKINSON
ACTIVITY – SATISFACTORY TO
17 SEP 01
DATE

APPROVED
FOR EFD FOR COMMANDER NAVFAC
9/27/01
DATE

A/E — EFD
DESIGN HDK
DRAWN HDK
REVIEW BJD
PROJECT MANAGER DWB
FIRE PROTECTION
BRANCH MANAGER
DESIGN DIRECTOR

DEPARTMENT OF THE NAVY — NAVAL FACILITIES ENGINEERING COMMAND
ATLANTIC DIVISION — NORFOLK, VIRGINIA
NAVAL STATION — NORFOLK, VA
PIER 3 REPLACEMENT
TITLE SHEET – DRAWING INDEX

CODE ID. NO. 80091 | SIZE D
SCALE: NONE
EFD NO.
STA. PROJ. NO. P–226
SPEC. NO. 05–99–9111
CONSTR. CONTR. NO. N62470–99–B–9111
NAVFAC DRAWING NO. 4439552
SHEET 1 OF 236
T–1

FILENAME: 9111T001.DWG, PLOT SCALE: 1=1, SAVED ON 08/29/01 AT 11:24, XREFS: NONE

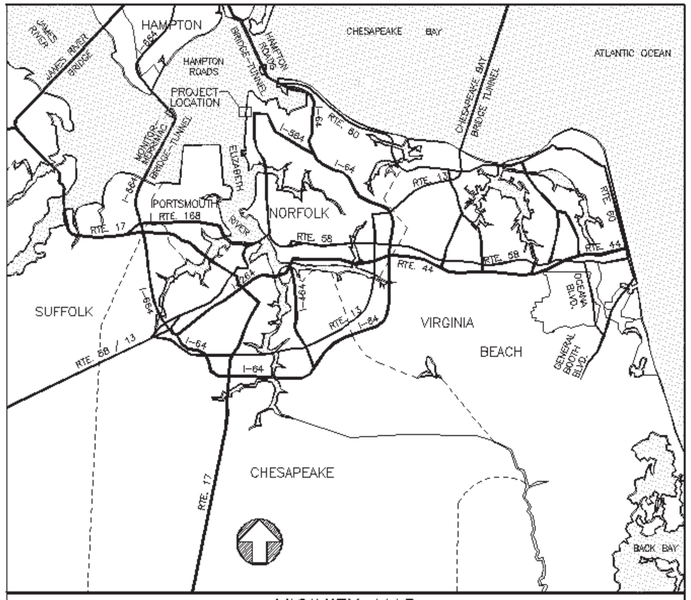

VICINITY MAP

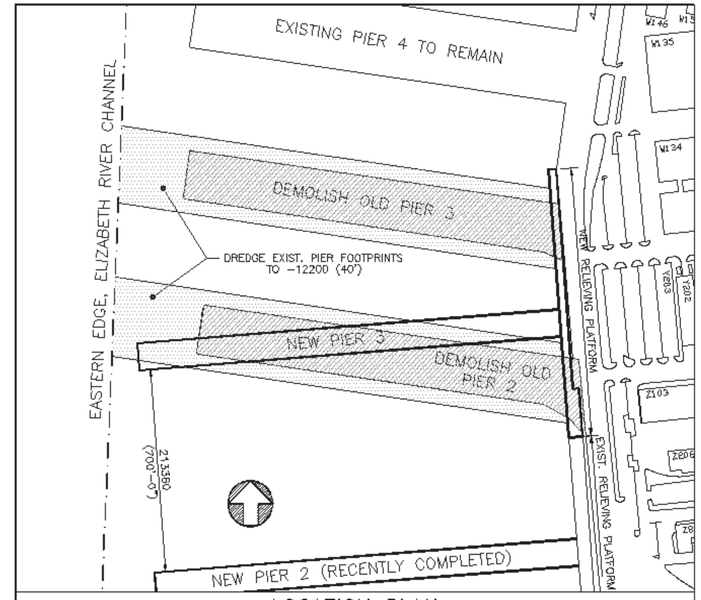

LOCATION PLAN

DRAWING INDEX (CONTINUED))

PAGE NO.	SHEET NO.	NAVFAC DWG NO	SHEET TITLE	PAGE NO.	SHEET NO.	NAVFAC DWG NO	SHEET TITLE	PAGE NO.	SHEET NO.	NAVFAC DWG NO	SHEET TITLE
157	SF-2	4439708	LHA MOORING ARRANGEMENTS	187	EU-6	4439738	SITE PLAN 2	217	E-19	4439768	PIER POWER AND LIGHTING PLAN – BENT 60 TO 70
158	SF-3	4439709	LPD / LSD MOORING ARRANGEMENTS	188	EU-7	4439739	SITE PLAN 3	218	E-20	4439769	PIER POWER AND LIGHTING PLAN – BNET 70 TO 80
159	SF-4	4439710	AOE-1 MOORING ARRANGEMENTS	189	EU-8	4439740	SITE PLAN 4	219	E-21	4439770	PIER POWER AND LIGHTING PLAN – SECURITY BOOM
160	SF-5	4439711	AOE-6 MOORING ARRANGEMENTS	190	EU-9	4439741	SITE PLAN 5	220	E-22	4439771	CABLE TRAY PLANS
161	SF-6	4439712	AO-177 MOORING ARRANGEMENTS	191	EU-10	4439742	SITE PLAN 6 AND 7	221	E-23	4439772	CABLE ROOM PLANS
162	SF-7	4439713	TAO-187 MOORING ARRANGEMENTS	192	EU-11	4439743	SITE PLAN 8	222	E-24	4439773	EQUIPMENT ROOM PLANS AND ELEVATIONS
163	SF-8	4439714	SURFACE COMBATANT MOORING ARRANGEMENTS	193	EU-12	4439744	SITE PLAN 9 AND P SWITCHING STATION PLAN	223	E-25	4439774	PUMP STATION PLANS & DETAILS
164	SF-9	4439715	LCC / T-AK MOORING ARRANGEMENTS	194	EU-13	4439745	NW SWITCHING STATION PLAN	224	E-26	4439775	PUMP STATION COMMUNICATION SYSTEM DIAGRAMS
165	SG-1	4439716	AT/FP PLATFORM, TOWER AND BREAKWATER	195	EU-14	4439746	MANHOLE EXPLODED VIEWS	225	E-27	4439776	PIER PANELBOARD SCHEDULES
166	SG-2	4439717	AT/FP GUARD TOWER PLANS AND ELEVATIONS	196	EU-15	4439747	MANHOLE EXPLODED VIEWS	226	E-28	4439777	PIER LIGHTING CONTACTOR PANELS
167	SG-3	4439718	AT/FP GUARD TOWER DETAILS	197	EU-16	4439748	MANHOLE EXPLODED VIEWS	227	E-29	4439778	LIGHTING FIXTURE SCHEDULE AND LIGHTING DETAILS
168	MU-1	4439719	SITE PLAN – STEAM & POL LINES	198	EU-17	4439749	MANHOLE DETAILS	228	E-30	4439779	HIGH MAST LIGHTING & FIRE ALARM BOX DETAILS
169	MU-2	4439720	PROFILES – STEAM & POL LINES	199	E-1	4439750	PIER CONDUIT PLAN – BENT 1 TO 20	229	E-31	4439780	TOP DECK CONDUIT SECTIONS
170	M-1	4439721	PIER 3 PLAN (BENTS 1-40), STM & PW SYSTEMS	200	E-2	4439751	PIER CONDUIT PLAN – BENT 21 TO 40	230	E-32	4439781	BOTTOM DECK CONDUIT SECTIONS
171	M-2	4439722	PIER 3 PLAN (BENTS 40-80), STM & PW SYSTEMS	201	E-3	4439752	PIER CONDUIT PLAN – BENT 41 TO 60	231	E-33	4439782	CONDUIT SUPPORT AND GROUNDING DETAILS
172	M-3	4439723	PIER 3 PLAN (BENTS 1-40), CHT & OW SYSTEMS	202	E-4	4439753	PIER CONDUIT PLAN – BENT 61 TO 80	232	E-34	4439783	PIER CONDUIT DETAILS
173	M-4	4439724	PIER 3 PLAN (BENTS 40-80), CHT & OW SYSTEMS	203	E-5	4439754	SHORE POWER SUBSTATION AREA – ENLARGED PLANS	233	E-35	4439784	CATHODIC PROTECTION SYSTEM DETAILS AND CABLE WELL DETAILS
174	M-5	4439725	STEAM PRESSURE REDUCING STATION PLAN	204	E-6	4439755	480V SHORE POWER SYSTEM CONNECTIONS – EAST STATIONS	234	E-36	4439785	FIRE ALARM, COMMUNICATION AND TELEPHONE DIAGRAMS
175	M-6	4439726	STM./PW SERVICE POINT PLAN	205	E-7	4439756	480V SHORE POWER SYSTEM CONNECTIONS – WEST STATIONS	235	E-37	4439786	SHORE POWER STATION DETAILS
176	M-7	4439727	DFM/JP5 SERVICE POINT PLAN	206	E-8	4439757	SECONDARY UNIT SUBSTATION ONE-LINE DIAGRAM	236	E-38	4439787	INDUSTRIAL POWER STATION AND CABLE TAP CABINET DETAILS
177	M-8	4439728	WATER, SANITARY, & OWWO SERVICE TO NEW PIER 3	207	E-9	4439758	SECONDARY UNIT SUBSTATION PLAN & ELEVATION				
178	M-9	4439729	OW / CHT SERVICE POINT PLAN	208	E-10	4439759	SUBSTATION POWER AND CONTROL WIRING DIAGRAM				
179	M-10	4439730	CHT/OW PUMP STATION DETAILS & PUMP DATA	209	E-11	4439760	COMMUNICATION, SCADA, AND FIRE ALARM RISER DIAGRAMS				
180	M-11	4439731	SECTIONS	210	E-12	4439761	PIER INDUSTRAIL POWER ONE-LINE DIAGRAM				
181	M-12	4439732	DETAILS	211	E-13	4439762	PIER POWER AND LIGHTING PLAN – BENT 1 TO 10				
182	EU-1	4439733	LEGEND	212	E-14	4439763	PIER POWER AND LIGHTING PLAN – BENT 10 TO 20				
183	EU-2	4439734	PARTIAL 34.5KV SYSTEM ONE-LINE DIAGRAM	213	E-15	4439764	PIER POWER AND LIGHTING PLAN – BENT 20 TO 30				
184	EU-3	4439735	PIER 2 34.5KV ONE-LINE & GROUNDING DIAGRAMS	214	E-16	4439765	PIER POWER AND LIGHTING PLAN – BENT 30 TO 40				
185	EU-4	4439736	CABLE SCHEDULES	215	E-17	4439766	PIER POWER AND LIGHTING PLAN – BENT 40 TO 50				
186	EU-5	4439737	SITE PLAN 1	216	E-18	4439767	PIER POWER AND LIGHTING PLAN – BENT 50 TO 60				

REVISIONS

SYM.	DESCRIPTION	DATE	REVISED BY

DESIGNED & ENGINEERED BY: LANTDIV NAVAL FACILITIES ENGINEERING COMMAND

APPROVED: ACTIVITY – SATISFACTORY TO

APPROVED: FOR ETD FOR COMMANDER NAVFAC 9/27/01

A/E ETD
DESIGN HDK
DRAWN HDK
REVIEW BJD
SD
CHIEF ARCH / ENGR.
PROJECT MANAGER DWB
FIRE PROTECTION ESJ
BRANCH MANAGER
DESIGN DIRECTOR

DEPARTMENT OF THE NAVY — NAVAL FACILITIES ENGINEERING COMMAND
NAVAL STATION — ATLANTIC DIVISION
NORFOLK, VIRGINIA
NAVAL STATION NORFOLK, VA.
PIER 3 REPLACEMENT
VICINITY AND LOCATION MAPS – DRAWING INDEX (CONT.)

CODE ID. NO. 80091 | SIZE D
SCALE: NONE
ETD NO.
STA. PROJ. NO. P-226
SPEC. NO. 05-99-9111
CONTR. CONTR. NO. N62470-99-B-9111
NAVFAC DRAWING NO. 4439553
SHEET 2 OF 236
T-2

FILENAME: 91117002.DWG, PLOT SCALE: 1=1, SAVED ON 08/29/01 AT 11:26, XREFS: NONE

DRAWING REVISED BY JULY 98

ABBREVIATIONS

A, AMP	AMPERE
AB	ANCHOR BOLT
AC	ASPHALTIC CONCRETE
ACH	AIR CHANGES PER HOUR
ADJ	ADJUSTABLE
AFF	ABOVE FINISHED FLOOR
AFFF	AQUEOUS FILM FORMING FOAM
AL, ALUM	ALUMINUM
ALT	ALTERNATE
AP	ACCESS PANEL
APPROX	APPROXIMATE
ARCH	ARCHITECTURAL
ASPH	ASPHALT
B	BOTTOM
BF	BLIND FLANGE
BFV	BUTTERFLY VALVE
BFP	BACKFLOW PREVENTER
BIT	BITUMINOUS
BHP	BRAKE HORSEPOWER
B̸	BASELINE
BLDG	BUILDING
BLK	BLOCK
BM	BEAM
BCS	BOTTOM OF STRUCTURE
BOV	BLOW OFF VALVE
BWL	BROKEN WHITE LINE
C	CENTIGRADE
℄	CENTERLINE
CAP	CAPACITY
CB	CATCH BASIN
CC	CENTER TO CENTER
CEM	CEMENT
CH	COLLECT, HOLD, TRANSFER = SANITARY
CI	CAST IRON, CRANEY ISLAND
CIP	CAST IRON PIPE
CL	CLEAR
CLF	CHAIN LINK FENCE
CMU	CONCRETE MASONRY UNIT
CND	CONDUIT
CO	CLEANOUT
CONC	CONCRETE
COND	CONDUCTOR
CONN	CONNECTION
CONST	CONSTRUCTION
CONT	CONTINUOUS, CONTINUATION
CORR	CORRUGATED
CP	NONREINFORCED CONCRETE PIPE
CT	COLLECTION/TRANSFER
CUH	CABINET UNIT HEATER
CV	CHECK VALVE
D	DRAIN
DB	DIRECT BURIAL
DFM	DIESEL FUEL MARINE
DH	DRILL HOLE
DI	DUCTILE IRON, DROP INLET
DIP	DUCTILE IRON PIPE
DIA	DIAMETER
DIM	DIMENSION
DL	DEAD LOAD
DMPR	DAMPER
DN	DOWN
DS	DOWNSPOUT
DWG	DRAWING
E	EAST, EXISTING
EA	EACH
EF	EACH FACE
ELEV	ELEVATION
ELEC	ELECTRIC
EP	EDGE OF PAVEMENT
EQ	EQUAL
EQUAL	EQUALIZATION
EQUIP	EQUIPMENT
EXH	EXHAUST
EX	EXISTING
EXP	EXPANSION, EXPOSED
EXP JT	EXPANSION JOINT
EXT	EXTERIOR
ETR	EXISTING TO REMAIN
F	FIRE, FOAM
FD	FLOOR DRAIN
FDN	FOUNDATION
FFE	FINISHED FLOOR ELEVATION
FG	FINISH GRADE
FH	FIRE HYDRANT
FIG	FIGURE
FIN	FINISH
FLA	FLASHING
FLR	FLOOR
FLUOR	FLUORESCENT
FM	FORCE MAIN
FTG	FOOTING
FRP	FIBERGLASS REINFORCED PLASTIC
GA	GAGE
GALV	GALVANIZED
GR	GRADE
GRD	GROUND
GS	GRAVITY SEWER
GV	GATE VALVE
GW	GROUND WATER
GYP	GYPSUM
H, HGT	HEIGHT
HDW	HARDWARE
HORIZ	HORIZONTAL
HP	HORSEPOWER, HIGH POINT
HR	HOUR
HS	HIGH STRENGTH
HWL	HIGH WATER LEVEL
HYD	HYDRANT
ID	INSIDE DIAMETER, INSIDE DIMENSION
I/A	INACCESSIBLE
INT	INTERIOR
INSUL	INSULATION, INSULATED
INV	INVERT
JB	JUNCTION BOX
JCT	JUNCTION
JST	JOIST
JT	JOINT
JP5	JET FUEL NO 5
KO	KNOCK OUT
KV	KILOVOLT
KVA	KILOVOLT-AMPERE
KW	KILOWATT
L	LITER
LL	LIVE LOAD
LT	LIGHT
LWL	LOW WATER LEVEL/LINE
LN	LINTEL
LV	LOUVER
M	METER
MAS	MASONRY
MATL	MATERIAL
MAX	MAXIMUM
MBH	THOUSAND BTU PER HOUR
MECH	MECHANICAL
MG	MATCH GRADE
MH	MANHOLE
MHW	MEAN HIGH WATER
MIN	MINIMUM
MISC	MISCELLANEOUS
MJ	MECHANICAL JOINT
MLW	MEAN LOW WATER
MM	MILLIMETER
MON	MONITORING
N	NORTH
NC	NON CORROSIVE
NEC	NATIONAL ELECTRICAL CODE
NGS	NATIONAL GEODETIC SURVEY
NIC	NOT IN CONTRACT
NNS	NORFOLK NAVAL STATION
NO	NUMBER
NOM	NOMINAL
NOS	NAVAL OPERATIONS STATION
NPW	NON POTABLE WATER
NRS	NON RISING STEM
NTS	NOT TO SCALE
OC	ON CENTER
OD	OUTSIDE DIAMETER
OPNG	OPENING
OPP	OPPOSITE
OWCP	OILY WASTE COLLECTION PIPING (GRAVITY)
OWFM	OILY WASTE FORCE MAIN
OWWO	OILY WASTE/WASTE OIL
P	PIPE
PE	PLAIN END
PI	POINT OF INTERSECTION
PIV	POST INDICATOR VALVE
PJF	PREFORMED JOINT FILLER
PN	PANEL
PRELIM	PRELIMINARY
PRV	PRESSURE RELIEF VALVE
PT	POINT, POINT OF TANGENT
PV	PLUG VALVE
PVC	POLYVINYL CHLORIDE
PVMT	PAVEMENT
PW, PWAT	POTABLE WATER
R	RADIUS, RISER
RAD	RADIUS
RCP	REINFORCED CONCRETE PIPE
RD	ROOF DRAIN, ROAD
RED	REDUCING, REDUCER
REINF	REINFORCEMENT, REINFORCED
REQD	REQUIRED
REV	REVISION
RF	ROOF
RFG	ROOFING
RM	ROOM
RO	RECOVERED OIL
RPM	REVOLUTIONS PER MINUTE
RET	RETAINING
R.R.	RAILROAD
S	SOUTH
SAN	SANITARY SEWER
SCH	SCHEDULE
SD	STORM DRAIN
SECT	SECTION
SERV	SERVICE
SHT	SHEET
SL	SLOPE, SLUDGE
SLWD	STATION LOW WATER DATUM
SM	SQUARE METER
SP	STATIC PRESSURE, SINGLE POLE
SPEC	SPECIFICATION
SQ	SQUARE
SS	STAINLESS STEEL
ST	STREET, STEAM, STORAGE/TRANSFER
STA	STATION
STD	STANDARD
STL	STEEL
SUP	SUPPORT
SUSP	SUSPENDED
SYS	SYSTEM
SWL	SOLID WHITE LINE
SDYL	SOLID DOUBLE YELLOW LINE
TB	TOP OF BANK
T&B	TOP AND BOTTOM
TC	TOP OF CURB
TEL	TELEPHONE
TEMP	TEMPERATURE, TEMPORARY
TERM	TERMINAL
TDH	TOTAL DYNAMIC HEAD (PUMPS)
THD	THREADED
THRU	THROUGH
TL	TOE (OF BANK) LINE (APPROX)
TP	TEST PIT
TS	TAPPING SLEEVE
TYP	TYPICAL
TS&V	TAPPING SLEEVE AND VALVE
UG	UNDERGROUND
UNK	UNKNOWN
V	VENT, VOLT, VALVE
VAC	VACUUM
VC	VITRIFIED CLAY
VCP	VITRIFIED CLAY PIPE
VENT	VENTILATION
VERT	VERTICAL
VLT	VAULT
W	WIDTH, WASTE, WATER, WATT, WEST
W/	WITH
W/O	WITHOUT
WL	WATER LEVEL
WP	WATERPROOF, WEATHERPROOF
WS	WATER SURFACE, WATERSTOP
WT	WEIGHT
WWF	WELDED WIRE FABRIC
WWM	WELDED WIRE MESH
WWTP	WASTE WATER TREATMENT PLANT
XFMR	TRANSFORMER
X-STR	EXTRA STRENGTH

GENERAL NOTES:

1. ALL DIMENSIONS, STATIONING, ELEVATIONS, INVERTS, SOUNDINGS AND PIPE SIZES ARE IN METRIC UNITS. NUMBERS WITH DECIMAL POINTS ARE METERS (I.E., 3.024) AND ALL NUMBERS WITHOUT DECIMALS ARE MILLIMETERS (I.E., 300).

2. DURING CONSTRUCTION THE CONTRACTOR SHALL MAINTAIN AT LEAST ONE LANE OF TRAFFIC IN EACH DIRECTION ALONG DECATUR AVENUE, MORRIS STREET AND GILBERT STREET. THE CONTRACTOR SHALL PROVIDE ALL TEMPORARY EXCAVATION COVERS, BARRICADES, SAFETY DEVICES, AND TRAFFIC CONTROL PERSONNEL WHILE WORKING IN OR ADJACENT TO ROADWAYS AND PARKING LOTS.

3. ALL STORM DRAINAGE OUTFALLS SHALL REMAIN IN SERVICE THROUGHOUT THE DURATION OF CONSTRUCTION.

4. CONTRACTOR SHALL SUPPLY 210 PARKING BUMPERS IN ADDITIONAL TO THOSE SHOWN. OFFICER IN CHARGE OF CONSTRUCTION SHALL DETERMINE LOCATION OF ADDITIONAL BUMPERS WITHIN 5 MILES OF CONSTRUCTION SITE.

5. THE FIELD OFFICE AND LAYDOWN AREA ASHORE IS THE EXISTING PARKING LOT BOUNDED ON THE NORTH BY GILBERT STREET, ON THE SOUTH BY MORRIS STREET, ON THE WEST BY DECATUR AVENUE, AND ON THE EAST BY A LINE OF CONCRETE PARKING BUMPERS WEST OF BUILDING Y109 (APPROXIMATELY 100M X 75M).

6. LOCATION OF CONTRACTOR LAYDOWN AREA AND FIELD OFFICES IS INDICATED ON SHEET C-2. THE EXACT LIMITS OF THE AREA WILL BE IDENTIFIED IN THE FIELD BY THE CONTRACTING OFFICER. THE CONTRACTOR SHALL BE RESPONSIBLE FOR MAINTAINING THE AREA. THE CONTRACTOR SHALL PROVIDE NORMAL MAINTENANCE, SECURITY, ETC. DURING THE CONTRACT. ANY MODIFICATIONS TO THE SITE WILL BE AT NO COST TO THE GOVERNMENT. THE CONTRACTOR SHALL RETURN THE SITE TO ITS ORIGINAL CONDITION AFTER CONSTRUCTION IS COMPLETED. IN ADDITION, THE CONTRACTOR SHALL APPLY A SEAL COAT TO THE PARKING LOT AND APPLY PAVEMENT MARKINGS TO RESTORE THE ORIGINAL PARKING CONFIGURATION. THE GOVERNMENT WILL PROVIDE UTILITIES (I.E., WATER, SANITARY SEWER, STEAM AND ELECTRICITY) IN ACCORDANCE WITH THE CONTRACT SPECIFICATIONS. THE CONTRACTOR SHALL REIMBURSE THE GOVERNMENT FOR THESE UTILITIES IN ACCORDANCE WITH THE CONTRACT SPECIFICATIONS. TELEPHONE AND OTHER COMMUNICATION SERVICES WILL NOT BE PROVIDED BY THE GOVERNMENT. THE CONTRACTOR SHALL BE RESPONSIBLE FOR OBTAINING TELEPHONE AND OTHER COMMUNICATION SERVICES FROM THE APPROPRIATE LOCAL COMPANY.

LEGEND

EXISTING		NEW
(3.00)	MAJOR CONTOUR	3.00
(2.75)	MINOR CONTOUR	2.75
	BUILDING	
	CONCRETE	
	BITUMINOUS PAVEMENT	
	CURB AND GUTTER	
300mm SD	STORM DRAIN (SD)	SD
300mm SS	SANITARY SEWER (SS)	SS
UC	UNDERGROUND COMMUNICATION	UC
UF	UNDERGROUND FUEL LINE	UFL
OW	OILY WASTE/WASTE OIL PIPE	OWWO
UE	UNDERGROUND ELECTRIC	UE
OH	OVERHEAD POWER	OH
250mm W	UNDERGROUND WATER MAIN	W
STM	UNDERGROUND STEAM	STM
OH STM	ABOVE GROUND STEAM	OH STM
X	FENCE	XX
	GUARDRAIL	
	HEDGES	
	SHRUB	
	CLEAT	
	SIGN	
	STEAM SUPPORTS	
	BOLLARD	
	FLAG POLE	FP
LP	LIGHT POLE	LP LP
PP	POWER POLE	PP
TP	COMMUNICATION POLE	TP
COMM PED	COMMUNICATION PEDESTAL	
COMM MH	COMMUNICATION MANHOLE	COMM MH
	ELECTRICAL BOX	
	TRANSFORMER PAD	
	GUY WIRE	
	ELECTRICAL MANHOLE	E MH
	ELECTRICAL VAULT	
	FIRE HYDRANT	FH
FA	FIRE ALARM	
WM	WATER METER	WM
WV	WATER VALVE	WV
	MONITORING WELL	
	WATER VAULT	
	STEAM MANHOLE	STM MH
	VALVE	
DI	DROP INLET	DI
MH	MANHOLE	MH
CO	CLEANOUT	CO
	BENCH MARK	
FF = 30.15	FINISHED FLOOR ELEVATION	
	SURVEY CONTROL POINT	
300.00	SPOT ELEVATIONS	300.00
	TIDAL FLOW	
	SOIL BORING LOCATION	B-#

REVISIONS

DESIGNED & ENGINEERED BY: LANTDIV NAVAL FACILITIES ENGINEERING COMMAND

GLENN & SADLER

COMMONWEALTH OF VIRGINIA — ROBERT M. SILVER — No. 14479 — 9-7-01 — PROFESSIONAL ENGINEER

TCC — DESIGN; RAW — DRAWN; RWS — REVIEW: JSC

PROJECT MANAGER: KRB; FIRE PROTECTION: RJT

DEPARTMENT OF THE NAVY — NAVAL FACILITIES ENGINEERING COMMAND — NORFOLK, VIRGINIA

ATLANTIC DIVISION

NAVAL STATION — NORFOLK, VA

PIER 3 REPLACEMENT

CIVIL LEGEND, NOTES AND ABBREVIATIONS

CODE ID NO. 80091 — SIZE D

SCALE: NONE

STA PROJ NO. P-226

SPEC. NO. 05-99-9111

CONSTR. CONTR. NO. N62470-99-B-9111

NAVFAC DRAWING NO. 4439603

SHEET 52 OF 236

C-1

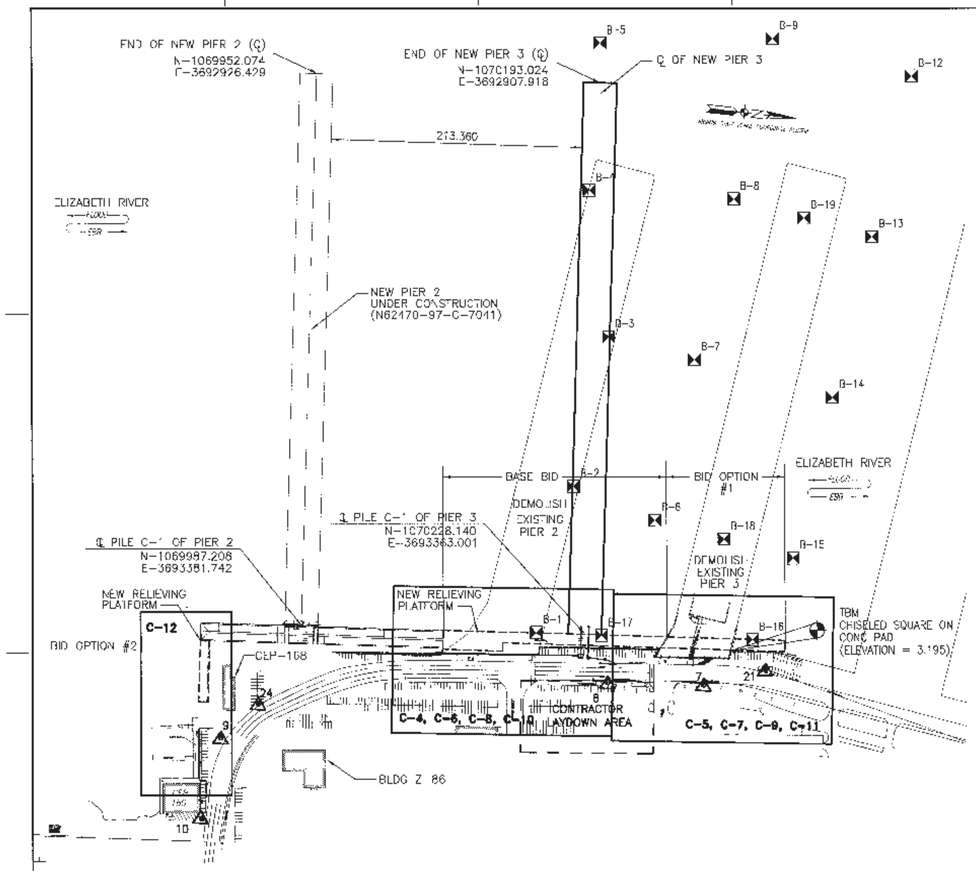

NEW PIER 3 AND RELIEVING PLATFORM LAYOUT PLANS

SCALE: 1:2000

SURVEY CONTROL COORDINATE POINT TABLE

POINT NUMBER	NORTHING	EASTING	ELEV.(*) (METERS)	DESCRIPTION
21	1070384.140	3693375.323	3.210	PK NAIL
7	1070333.069	3693393.480	3.100	PK NAIL
8	1070251.746	3693400.458	3.155	PK NAIL
9	1069928.899	3693481.739	N/A	PK NAIL
10	1069920.149	3693550.402	2.800	PK NAIL
24	1069957.653	3693450.278	3.327	PK NAIL
NOTE: COORDINATE VALUES ARE BASED ON METRIC STATE PLANE GRID				

(*) ELEVATIONS SHOWN HEREON ARE IN METERS AND REFER TO NAVD 29.

NEW STRUCTURE LOCATION COORDINATE POINT TABLE

STRUCTURE	NORTHING	EASTING	DESCRIPTION
SSMH1	1070243.526	3693390.817	SANITARY SEWER MANHOLE SHEET C-10
SSMH2	1070330.571	3693382.674	SANITARY SEWER MANHOLE SHEET C-11
OWMH	1070243.109	3693395.173	OILY WATER MANHOLE SHEET C-10
FH	1070242.822	3693376.449	FIRE HYDRANT SHEET C-10

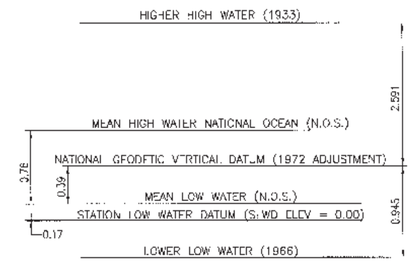

DIAGRAM OF DATUM PLANE FOR NORFOLK NAVAL STATION

NOT TO SCALE
DIMENSIONS SHOWN ARE IN METERS

GRAPHIC SCALE

1:2000 0 20 40 60 80 100 120 140 160 180 200m

REVISIONS

DESIGNED & ENGINEERED BY: LANTDIV NAVAL FACILITIES ENGINEERING COMMAND; GLENN & SADLER

ATLANTIC DIVISION
NAVAL FACILITIES ENGINEERING COMMAND
NORFOLK, VA

NAVAL STATION
NORFOLK, VA

PIER 3 REPLACEMENT

NEW PIER 3 AND RELIEVING PLATFORM LAYOUT PLANS

DWG. ID. NO. 5009 | SIZE D
SCALE: AS NOTED
NAVFAC NO. P-226
DWG. NO. 06-99-9111
CONTR. COMB. NO. N62470-99-B-9111
NAVFAC DRAWING NO. 4439604
SHEET 53 OF 236

C-2

PROJECT MANAGER KRB
SENIOR ENGINEER BJT
CHIEF ARCHT. ENGR. JSC
RMS

SURVEY DATA

EXISTING STORM DRAIN (SD) STRUCTURE DATA

1. DI
   RIM = 3.022
   BOS = I/A
   (FULL OF DEBRIS)
2. DI
   RIM = 2.911
   INV 300mm RCP (W) = I/A
   (FULL OF DEBRIS)
   INV 150mm PVC (W) = 1.951
3. DI
   RIM = 2.373
   INV 200mm PVC = 2.283
4. DI
   (PER PLANS)
5. DI
   RIM = 2.391
   INV 200mm RCP (E) = 2.368
   INV 300mm RCP (S) = 2.081
6. DI
   (PER PLANS)
7. DI
   (PER PLANS)

EXISTING SANITARY SEWER (SS) STRUCTURE DATA

1. OIL WASTE MH
   RIM = 3.156
   BOS = I/A
2. SS MH
   RIM = 3.080
   INV 300mm PVC (N) = 0.360
   INV 300mm PVC (W) = 0.330
3. SS MH
   RIM = 2.996
   BOS = I/A
   (PLUGGED LINE)
4. SS MH
   RIM = 3.096
   INV 300mm TC (N) = 0.794
   INV 300mm TC (S) = 0.789
5. SS MH
   (PER PLANS)

EXISTING ELECTRIC (ELEC) STRUCTURE DATA

1. ELEC MH
   RIM = 3.089
   BOS = 0.599
2. ELEC MH
   RIM = 3.008
   BOS = 1.448
3. ELEC MH
   RIM = 3.007
   BOS = 1.567
   (ABANDONED)
4. ELEC MH
   RIM = 3.015
   BOS = 0.645
5. ELEC MH
   RIM = 3.151
   BOS = 0.986

EXISTING COMMUNICATION (COMM) STRUCTURE DATA

1. COMM MH
   RIM = 3.057
   BOS = 0.682
2. COMM MH
   RIM = 3.037
   BOS = 2.252
3. COMM MH
   RIM = 3.004
   BOS = 1.004
4. COMM MH
   RIM = 3.031
   BOS = 1.646
5. COMM MH
   RIM = 3.021
   BOS = 1.421
6. COMM MH
   RIM = 3.033
   BOS = 0.593
7. COMM MH
   RIM = 3.173
   BOS = 1.483

EXISTING STEAM STRUCTURE DATA

1. STEAM MH
   RIM = 2.987
   BOS = 1.042

EXISTING FUEL STRUCTURE DATA

1. FUEL MH
   RIM = 3.007
   BOS = I/A

EXISTING UNKNOWN STRUCTURE DATA

1. MH
   RIM = 3.164
   BOS = 1.564
2. MH
   RIM = 3.034
   BOS = 0.639

EXISTING STORM DRAIN (SD) STRUCTURE DATA

1. PIPE END
   INV 600mm RCP (NW) = 1.035
2. SD MH
   RIM = 2.849
   INV 600mm RCP (NW) = 0.944
   INV 600mm RCP (SE) = 0.964
3. DI
   RIM = 2.710
   INV 600mm RCP (E) = I/A
   INV 600mm RCP (W) = 1.235

EXISTING WATER (W) STRUCTURE DATA

1. WATER VALVE
   RIM = 2.921
   BOS = 1.981

SURVEY NOTES:

1. ALL DIMENSIONS, STATIONING, ELEVATIONS, INVERTS, SOUNDINGS AND PIPE SIZES ARE IN METRIC UNITS. NUMBERS WITH DECIMAL POINTS ARE METERS (I.E., 3.024) AND ALL NUMBERS WITHOUT DECIMALS ARE MILLIMETERS (I.E., 300).
2. EXISTING PIERS 2 AND 3 TO BE REMOVED THIS CONTRACT.
3. TOPOGRAPHIC SURVEY PREPARED BY GLENN & SADLER ASSOCIATES, INC., FROM FIELD DATA COLLECTED IN JULY 2000.
4. THIS SURVEY DOES NOT GUARANTEE THE EXISTENCE OR NONEXISTENCE, SIZE, TYPE, DEPTH, MATERIAL OR LOCATION OF ANY UNDERGROUND UTILITIES. ALL UTILITIES SHOWN ARE BASED ON ABOVEGROUND UTILITY STRUCTURES, AVAILABLE UTILITY MAPS AND SITE PLANS. THE CONTRACTOR SHALL HAVE ALL EXISTING SITE UTILITIES VERIFIED PRIOR TO ANY EXCAVATION.
5. TEMPORARY BENCHMARK #1 (TBM #1) IS A CHISELED SQUARE ON CONCRETE PAD AS SHOWN HEREON. (TBM #1 ELEVATION = 3.195M)
6. ELEVATIONS SHOWN HEREON ARE IN METERS AND REFER STATION LOW WATER DATUM. ELEVATIONS WERE ESTABLISHED FROM TBM ON PIER 2 REPLACEMENT, NAVFAC DRAWING NO. 4395893.
7. HORIZONTAL COORDINATES SHOWN HEREON ARE IN METERS AND REFER TO THE VIRGINIA STATE PLANE COORDINATE SYSTEM, SOUTH ZONE, NAD83 (1986 ADJUSTMENT). HORIZONTAL COORDINATES WERE ESTABLISHED FROM NH-1.

REVISIONS

DESCRIPTION	BY	DATE	APPROVED

DESIGNED & ENGINEERED BY LANTDIV

GLENN & SADLER

COMMONWEALTH OF VIRGINIA
ROBERT M. SILVER
No 14479
9-7-01
PROFESSIONAL ENGINEER

ACTIVITY - SUBMITTED TO

FOR USE FOR COMMENT INITIAL

DESIGN
DRAWN
REVIEW
QC
PROJECT MANAGER KRB
PROJ. ENGINEER RJF
PROJ. MANAGER
DESIGN DIRECTOR

NAVAL FACILITIES ENGINEERING COMMAND
ATLANTIC DIVISION
NORFOLK, VIRGINIA
DEPARTMENT OF THE NAVY
NAVAL STATION
NORFOLK, VA
NAVAL STATION
PIER 3 REPLACEMENT
EXISTING UTILITY STRUCTURE DATA AND SURVEY NOTES

COST CO. NO. PROJ. SECT. B
SCALE NONE
SYS. NO.
SPL PROJ. NO. C5-99-9111
PROJ. NO. P-226
CONTR. NO. N62470-99-B-9111
NAVFAC DRAWING NO. 4439605
SHEET 54 OF 236
C-3

D C B A

8 7 6 5 4 3 2 1

P:\NAVD\NAVD3D\c-sh\911\c3.dwg Plotted By: KF-Jones, Plotted: Sep 07, 2001 - 11:29

GENERAL DEMOLITION NOTES:

A. PIER 2 AND PIER 3 TO BE REMOVED UNDER THIS CONTRACT. REFER TO DWG. DS-1 FOR DEMOLITION DETAILS.

B. IN LIEU OF REMOVING UTILITY STRUCTURES IN THEIR ENTIRETY, THE CONTRACTOR MAY REMOVE THE RIM AND COVER, REMOVE THE STRUCTURE TO 300MM BELOW GRADE AND FILL REMAINING STRUCTURE WITH SELECT FILL. ALL PIPES AND CONDUITS ABANDONED IN THE STRUCTURE SHALL BE PLUGGED.

C. ALL EXISTING UTILITY LINES AND CONDUITS WHICH ARE ABANDONED IN PLACE SHALL BE PUMPED FULL OF FLOWABLE FILL AND ENDS PLUGGED. CABLING AND WIRES SHALL BE REMOVED FROM CONDUITS PRIOR TO ABANDONMENT.

D. ALL WATER VALVES, METERS, AND BACKFLOW PREVENTERS DESIGNATED FOR REMOVAL SHALL REMAIN THE PROPERTY OF THE GOVERNMENT AND SHALL BE TURNED OVER TO THE NAVY PUBLIC WORKS CENTER, UTILITIES DEPARTMENT, TO A LOCATION WITHIN 5 MILES TO BE DETERMINED BY CONTRACTING OFFICER.

E. FOR BIDDING PURPOSES ASSUME:
- (a) BITUMINOUS SURFACES CONSIST OF 100MM THICK BITUMINOUS CONC. OVER 250 UNREINFORCED CONCRETE.
- (b) CONCRETE FOR WALKS AND RAISED ISLANDS ARE 100MM THICK.
- (c) CONCRETE PAVEMENT IS 230MM THICK UNREINFORCED CONCRETE.
- (d) ABANDONED RAILROAD TRACKS (INCLUDING TIES) ARE ENCASED IN 600mm THICK UNREINFORCED CONCRETE AND OVERLAYED W/ 200mm THICK BITUMINOUS CONCRETE PAVEMENT.

F. SEE MECHANICAL AND ELECTRICAL DRAWINGS FOR ADDITIONAL DEMOLITION REQUIREMENTS

SPECIFIC DEMOLITION:

1. REMOVE ABANDONED UTILITY POLE.
2. REMOVE CONCRETE
3. REMOVE BITUMINOUS PAVEMENT
4. REFER TO SHEET DS 7 FOR PIER DEMOLITION
5. REMOVE SIGN
6. REMOVE ELECTRIC BOX
7. REMOVE AND RESET VAULT LID AND RIM TO NEW FINISHED GRADE ELEVATION.
8. REMOVE DROP INLET
9. REMOVE MANHOLE AND PIPE, SEE GENERAL DEMOLITION NOTE C.
10. REMOVE EXISTING ABANDONED STORM SEWER AND PLUG AND FILL REMAINDER OF LINE WITH FLOWABLE FILL.
11. REMOVE SHEET PILES.
12. REMOVE CROSSWALK MARKINGS.

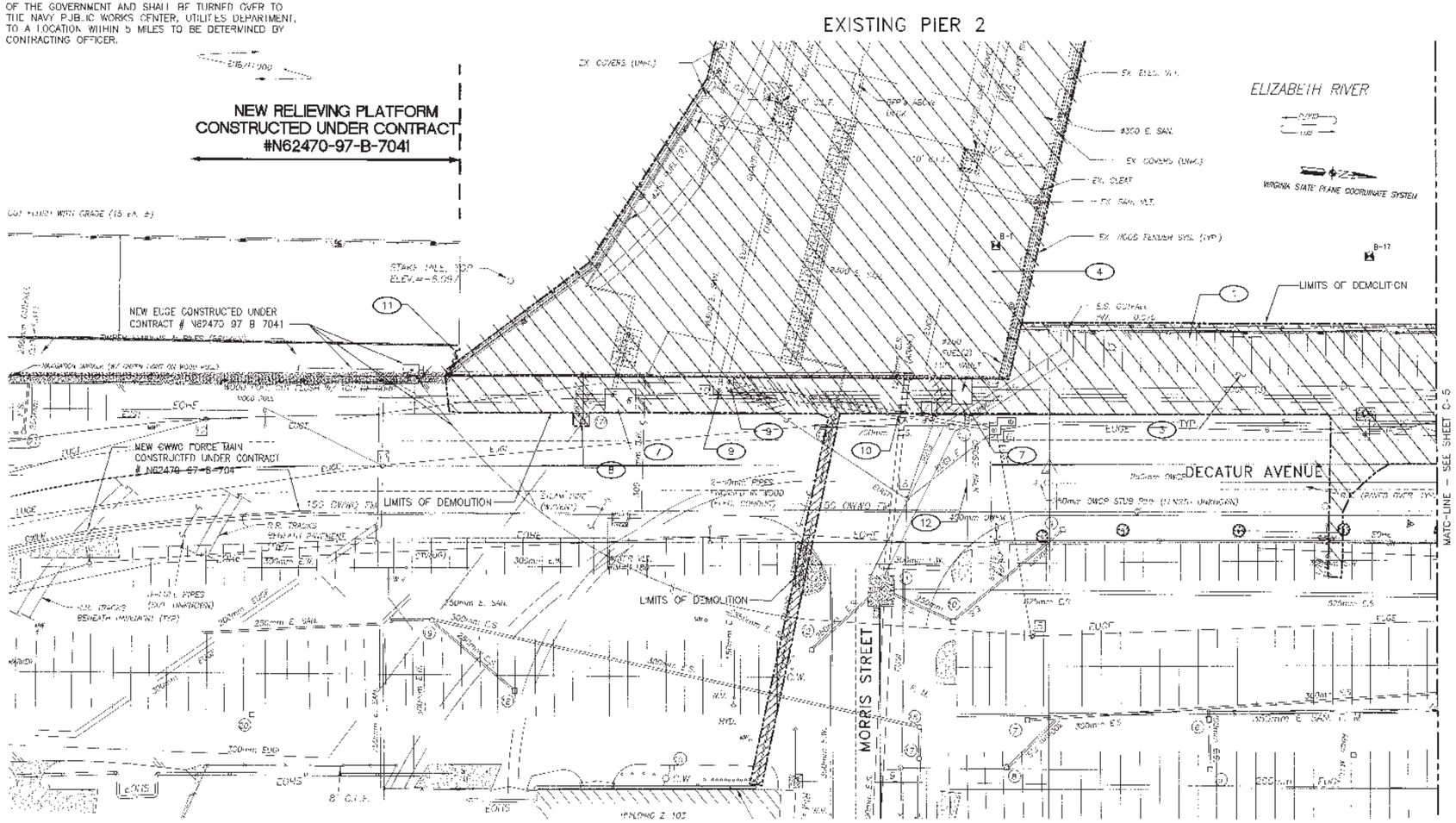

EXISTING PIERS 2&3 DEMOLITION PLAN (1 OF 2)

SCALE= 1:300

GRAPHIC SCALE

1:300 0 5 10 15 20 25 30m

REVISIONS

DESIGNED & ENGINEERED BY: LANTDIV

GLENN & SADLER

No. 14179 9-7-01

ATLANTIC DIVISION

NAVAL STATION NORFOLK, VA

PIER 3 REPLACEMENT

EXISTING SITE 3 DEMOLITION PLAN (1 OF 2)

SCALE: AS NOTED

DWG. NO. P-226

DWG. NO. 05-99-9111

CONTR. NO. N62470-99-B-9111

4439606

SHEET 55 OF 236

C-4

SPECIFIC DEMOLITION:

1. REMOVE ABANDONED RAIL LINES, INCLUDING LINES SUBMERGED BENEATH PAVEMENT BEING REMOVED.
2. REMOVE CONCRETE
3. REMOVE BITUMINOUS PAVEMENT
4. REFER TO SHEET DS 7 FOR PIER DEMOLITION
5. REMOVE SIGN
6. REMOVE ELECTRIC BOX
7. REMOVE AND RESET VAULT LID.
8. REMOVE DROP INLET
9. REMOVE MANHOLE, SEE GENERAL DEMOLITION NOTE C.
10. REMOVE CROSSWALK MARKINGS.

SHEET NOTES:

1. REFER TO SHEET C-1 FOR CIVIL NOTES, LEGEND AND ABBREVATIONS.

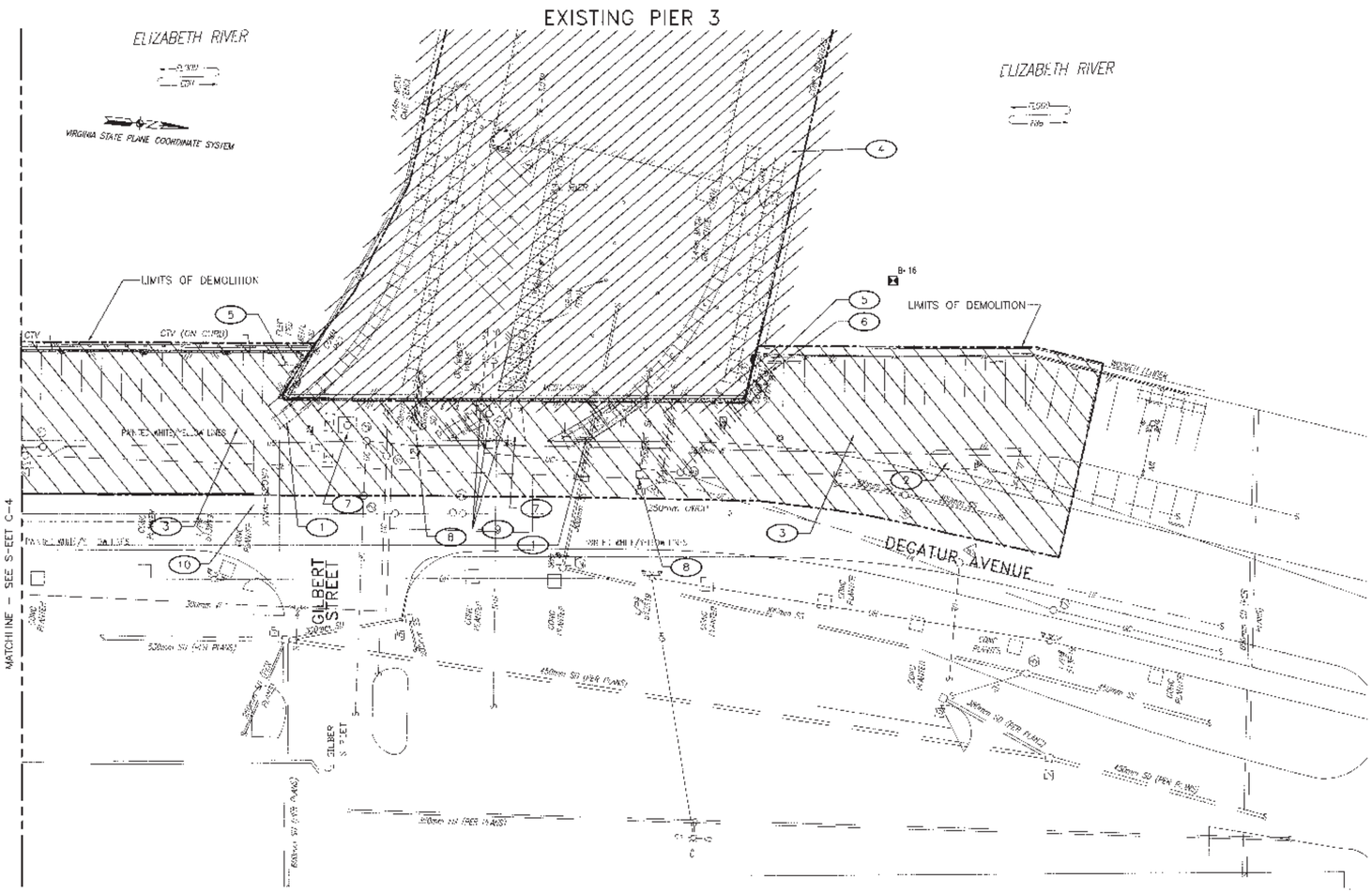

EXISTING PIERS 2&3 DEMOLITION PLAN (2 OF 2)

SCALE= 1:300

GRAPHIC SCALE

1:300 0 5 10 15 20 25 30m

REVISIONS

DESIGNED & DRAWN BY: LANTDIV

GLENN & SADLER

DEPARTMENT OF THE NAVY
NAVAL STATION
ATLANTIC DIVISION
NORFOLK, VA

PIER 3 REPLACEMENT

EXISTING SITE 3 DEMOLITION PLAN (2 OF 2)

SCALE: AS NOTED

SEA PROJ. NO. P-226

SPEC. NO. 05-99-9111

CONTROL CONTR. NO. N6247D-99-B-9111

TRACING DRAWING NO. 4439607

SHEET 56 OF 236

C-5

SHEET NOTES:

1. REFER TO SHEET C-1 FOR CIVIL NOTES, LEGEND AND ABBREVATIONS.
2. CONTRACTOR SHALL REPLACE ANY PAVEMENT STRIPING REMOVED OR DAMAGED DURING DEMOLITION WORK.

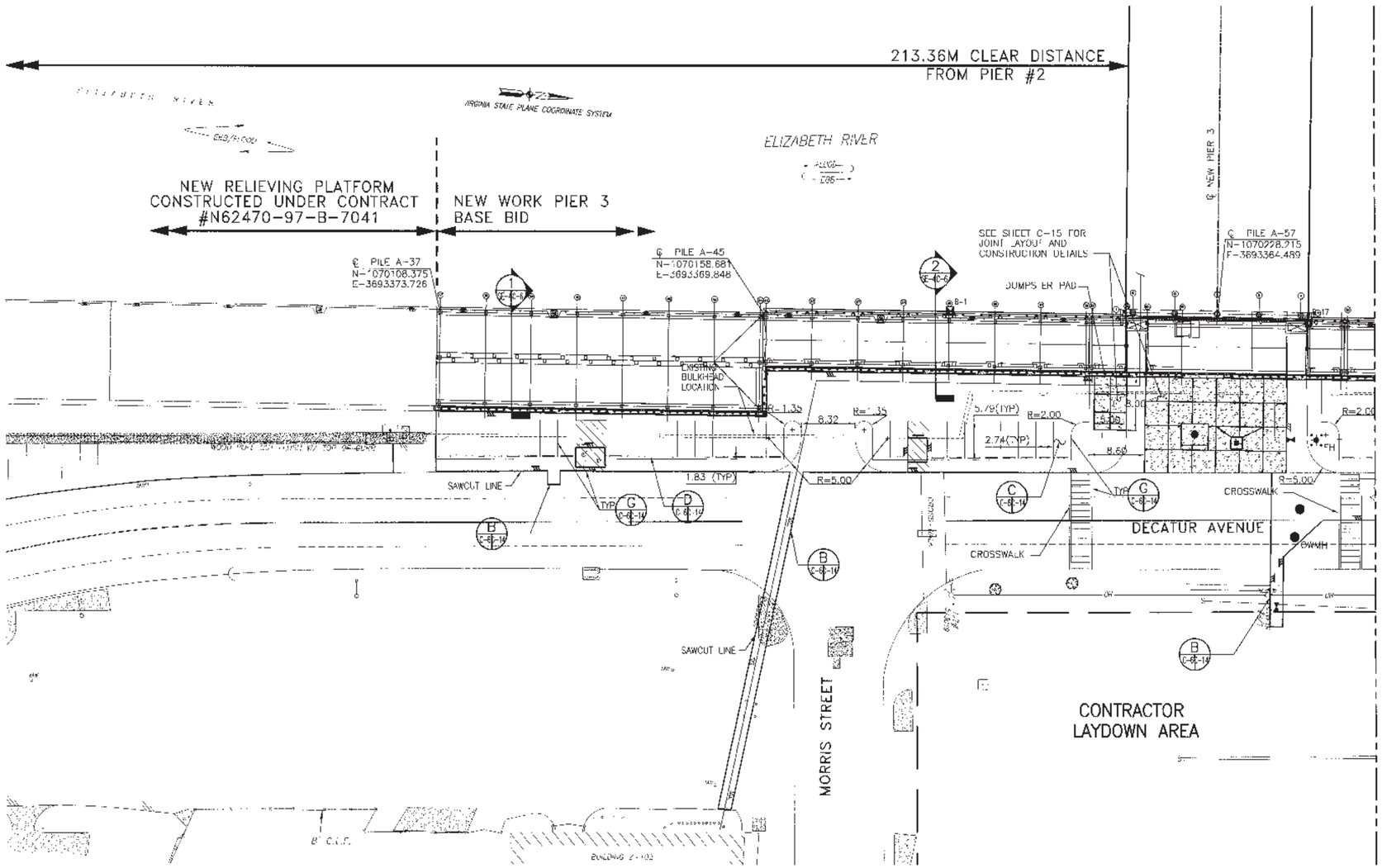

NEW SITE LAYOUT PLAN (1 OF 2)

SCALE- 1:300

GRAPHIC SCALE

1:300 0 5 10 15 20 25 30m

REVISIONS

LANTDIV

GLENN & SADLER

ATLANTIC DIVISION

NAVAL STATION NORFOLK, VA

PIER 3 REPLACEMENT

NEW SITE LAYOUT PLAN (1 OF 2)

SCALE AS NOTED

DWG. NO. P-226

CONTR. NO. 05-99-9111

CONTR. CODE IDENT. NO. N62470-99-B-9111

WORK DRAWING NO. 4439608

SHEET 57 OF 238

C-6

SHEET NOTES:

1. REFER TO SHEET C-1 FOR CIVIL NOTES, LEGEND AND ABBREVATIONS.

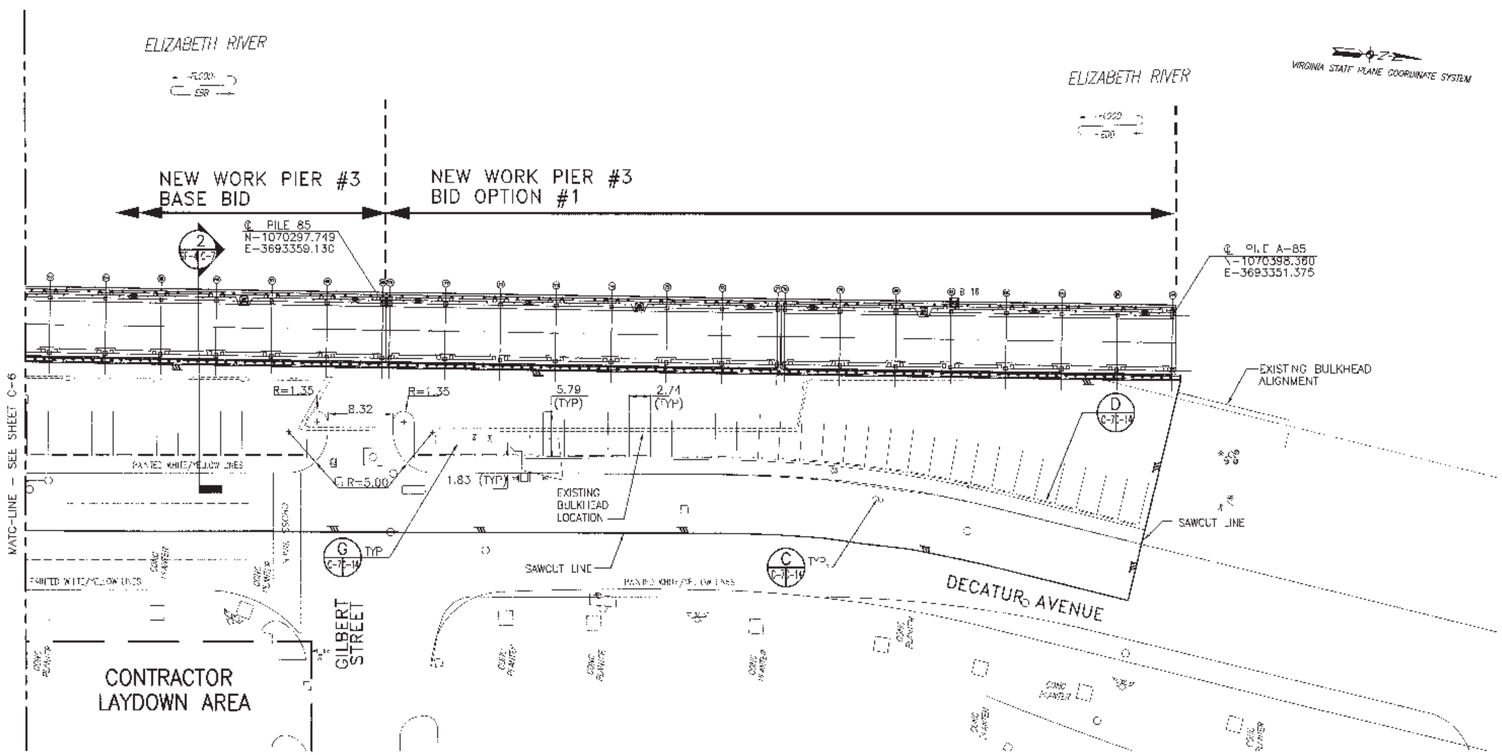

NEW SITE LAYOUT PLAN (2 OF 2)

SCALE= 1:300

GRAPHIC SCALE

1:300 0 5 10 15 20 25 30m

REVISIONS			
SYM.	DESCRIPTION	DATE	APPROVE

DESIGNED & ENGINEERED BY: LANTDIV NAVAL FACILITIES ENGINEERING COMMAND

GLENN & SADLER

REGISTERED PROFESSIONAL ENGINEER ROBERT M. SILVER No. 14479 9-7-01 COMMONWEALTH OF VIRGINIA

APPROVED

ADD 7 - SUBMITTED TO

NOW APPROVED

FOR BID FOR COMMANDER (NAVFAC)

DRAFTS: TKC, TCC, RDW, RMS

DESIGN, DRAWN, REVIEW, DC, DISC. ARCHT CHRG: RSC

PROJECT MANAGER: KRB

FIELD PROVIDER/PM: RST

REMOTE MO/SITE: RSC

DIVISION DIRECTOR

NAVAL FACILITIES ENGINEERING COMMAND ATLANTIC DIVISION

NORFOLK, VIRGINIA

NAVAL STATION NORFOLK, VA

PIER 3 REPLACEMENT

NEW SITE LAYOUT PLAN (2 OF 2)

DOCKET NO. 7001 | SERV. 0

SCALE: AS NOTED

ITN NO.

SER. PROJ. NO. P-226

SPEC. NO. 05-99-9111

SOLICITATION NO. N62470-99-B-9111

NAVFAC DRAWING NO. 4439609

SHT. 58 OF 236

C-7

D

C

B

A

8 7 6 5 4 3 2 1

SHEET NOTES:

1. REFER TO SHEET C-1 FOR CIVIL NOTES, LEGEND AND ABBREVIATIONS.

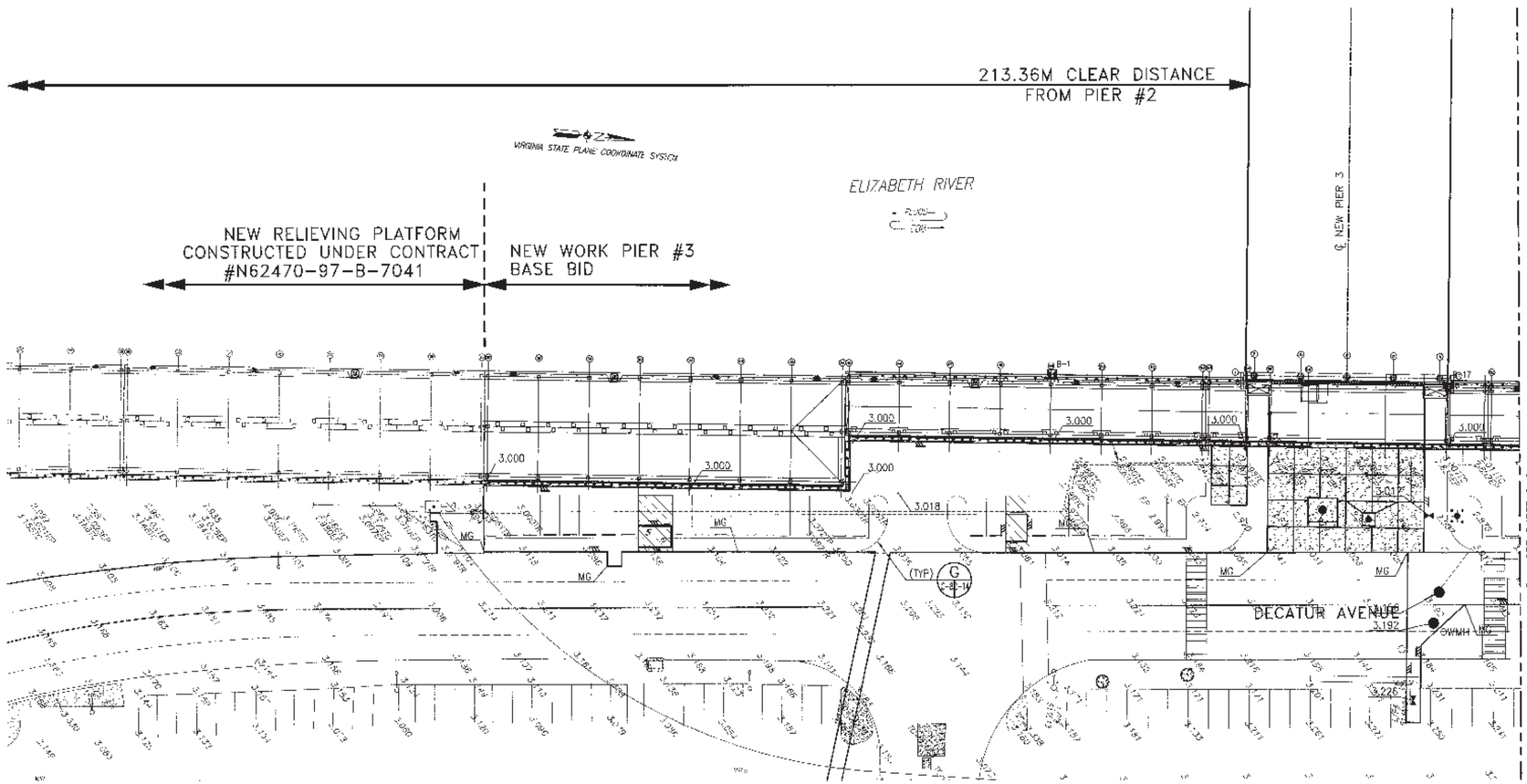

NEW SITE GRADING PLAN (1 OF 2)

SCALE: 1:300

GRAPHIC SCALE

1:300 0 5 10 15 20 25 30m

REVISIONS

DESIGNED & ENGINEERED BY LANTON

GLENN & SADLER

ROBERT M. SILVER No.14478 9-7-01

ATLANTIC DIVISION

NAVAL STATION NORFOLK, VA

PIER 3 REPLACEMENT

NEW SITE GRADING PLAN (1 OF 2)

AS NOTED

P-220

05-99-9111

N62470-99-B-9111

4439610

SHEET 59 OF 236

C-8

SHEET NOTES:

1. REFER TO SHEET C-1 FOR CIVIL NOTES, LEGEND AND ABBREVATIONS.

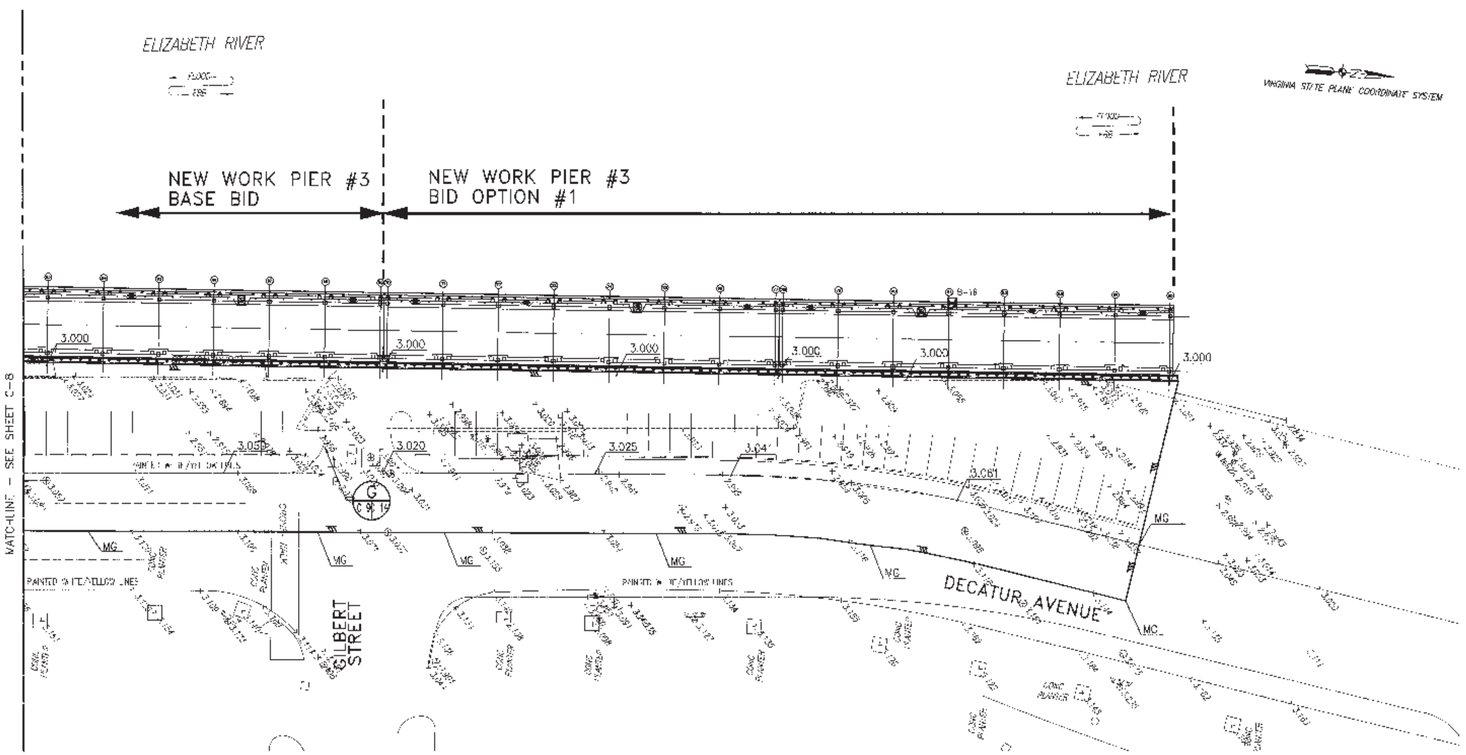

NEW SITE GRADING PLAN (2 OF 2)

SCALE: 1:300

GRAPHIC SCALE

1:300 0 5 10 15 20 25 30m

REVISIONS

DESIGNED & ENGINEERED BY: LANTDIV NAVAL FACILITIES ENGINEERING COMMAND

GLENN & SADLER

COMMONWEALTH OF VIRGINIA ROBERT M. SILVER No. 14479 9-7-01 PROFESSIONAL ENGINEER

ATLANTIC DIVISION NAVAL STATION NORFOLK, VIRGINIA

NAVAL STATION NORFOLK, VA

PIER 3 REPLACEMENT

NEW SITE GRADING PLAN (2 OF 2)

SCALE: AS NOTED

SPEC NO. P-226

DWG NO. 05-99-9111

CONTR NO. N62470-99-B-9111

NAVFAC DRAWING NO. 4439611

SHEET 80 OF 236

C-9

SHEET NOTES:

1. REFER TO SHEET C-1 FOR CIVIL NOTES, LEGEND AND ABBREVATIONS.
2. COORDINATE CONSTRUCTION OF NEW WATER, SANITARY, OWWO, AND STORM DRAINAGE UTILITIES WITH CONSTRUCTION OF NEW MECHANICAL AND ELECTRICAL UTILITIES SHOWN ON SHEETS MU-2M, EU-7 AND EU-8.

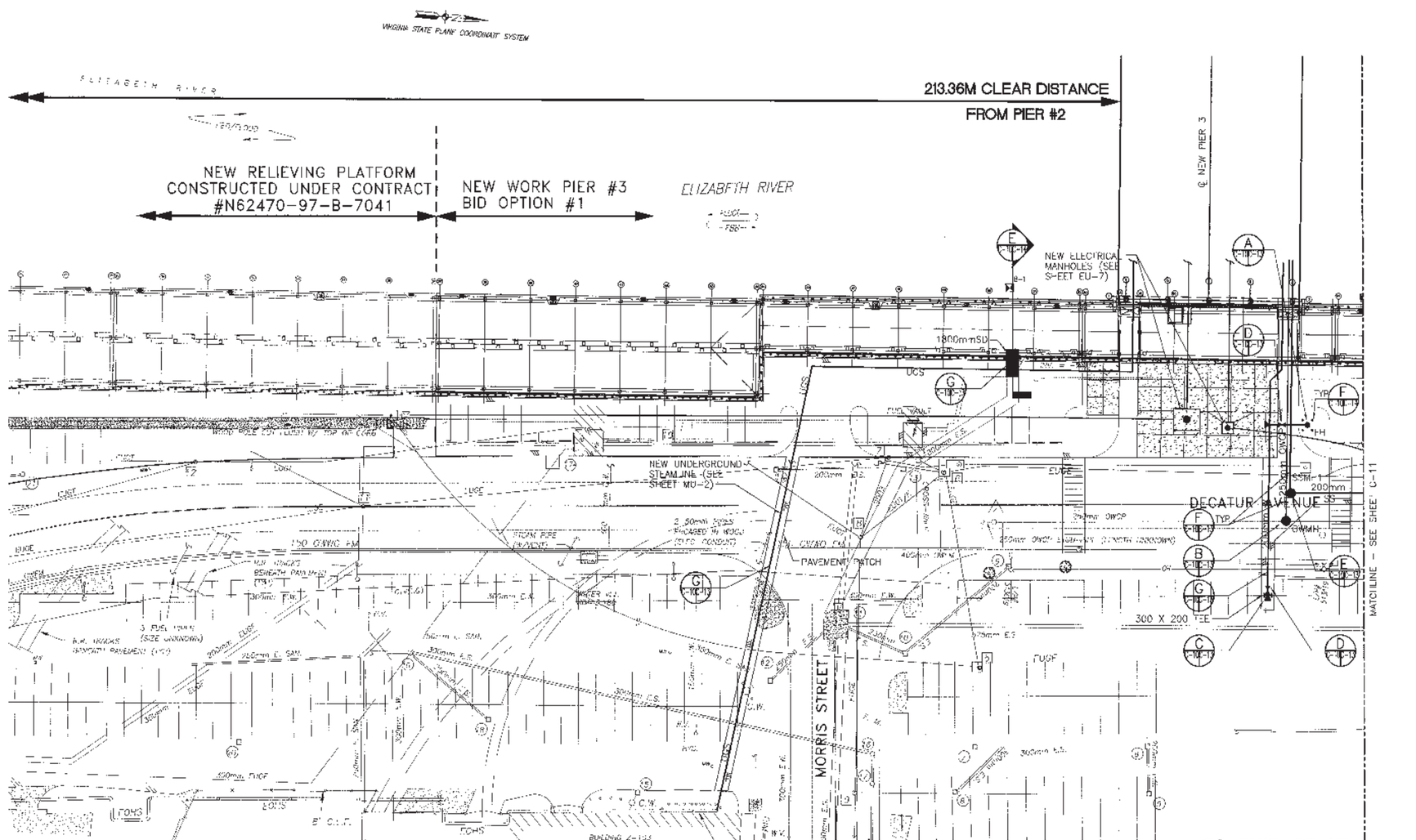

NEW SITE UTILITY PLAN (1 OF 2)

SCALE= 1:300

GRAPHIC SCALE

1:300 0 5 10 15 20 25 30m

REVISIONS

DESIGNED & ENGINEERED BY: LANTDIV

GLENN & SADLER

ROBERT K. SILVER No. 14479 9-7-01 PROFESSIONAL ENGINEER

DEPARTMENT OF THE NAVY
NAVAL STATION
ATLANTIC DIVISION
NAVAL FACILITIES ENGINEERING COMMAND
NORFOLK, VIRGINIA
NAVAL STATION NORFOLK, VA

PIER 3 REPLACEMENT

NEW SITE UTILITY PLAN (1 OF 2)

SCALE: AS NOTED

DWG. NO. P-228

SPEC NO. 00-99-9111

CONTRACT NO. N62470-99-B-9111

WORK DRAWING NO. 4439612

SHEET 61 OF 236

C-10

P:\9803\98323\CIVIL\9111c10.dwg, Plotted By: NF-Guest, Plotted: Sep 07, 2001 - 11:56am

SHEET NOTES:

1. REFER TO SHEET C-1 FOR CIVIL NOTES, LEGEND AND ABBREVATIONS.

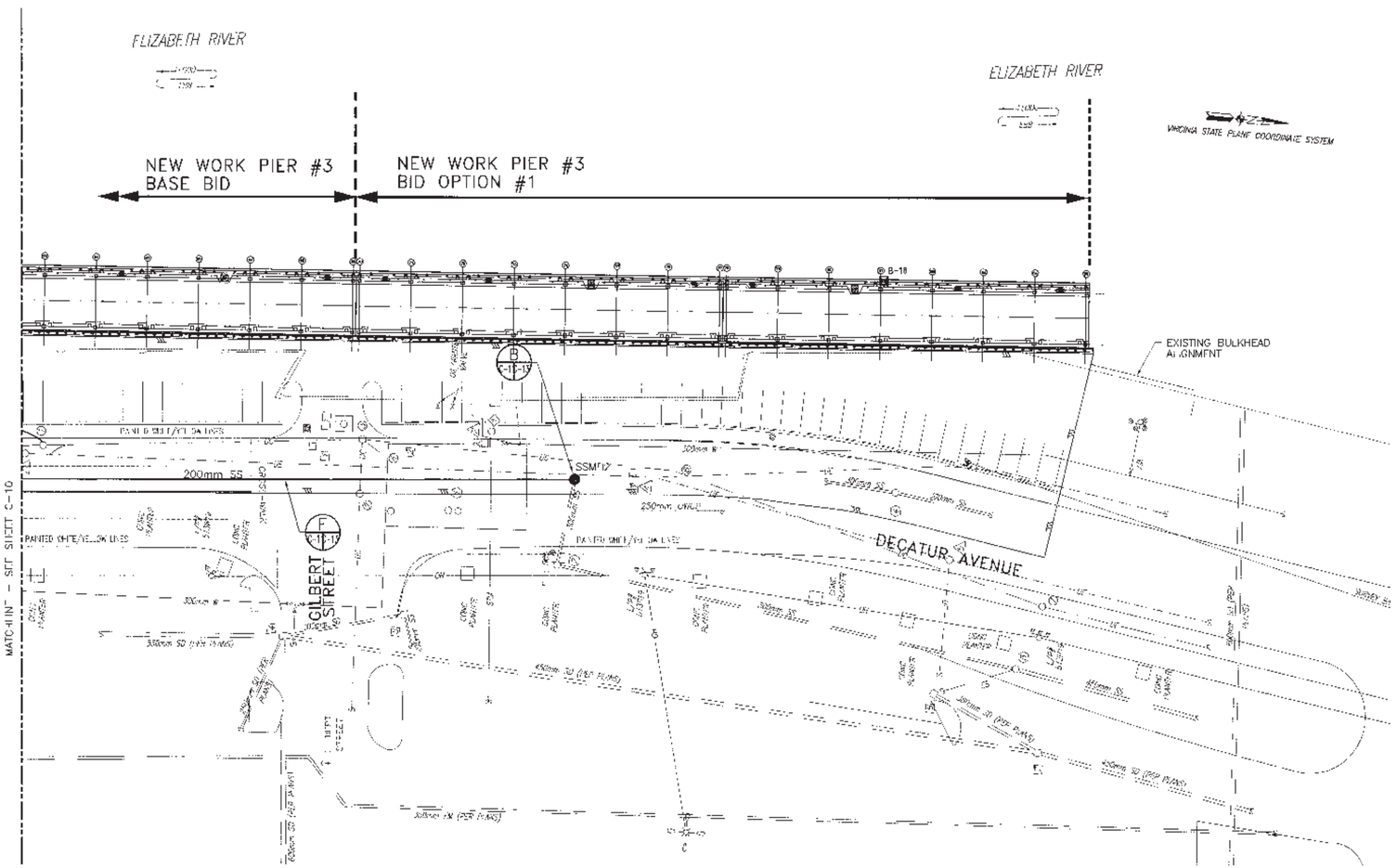

NEW SITE UTILITY PLAN (2 OF 2)

SCALE= 1:300

GRAPHIC SCALE

1:300 0 5 10 15 20 25 30m

REVISIONS

LANTDIV

GLENN & SADLER

ROBERT M. SILVER

9-7-01

ATLANTIC DIVISION

NAVAL STATION NORFOLK, VA

PIER 3 REPLACEMENT

NEW SITE UTILITY PLAN (2 OF 2)

AS NOTED

P-226

05-99-9111

N6247O-99-B-9111

4439613

62 236

C-11

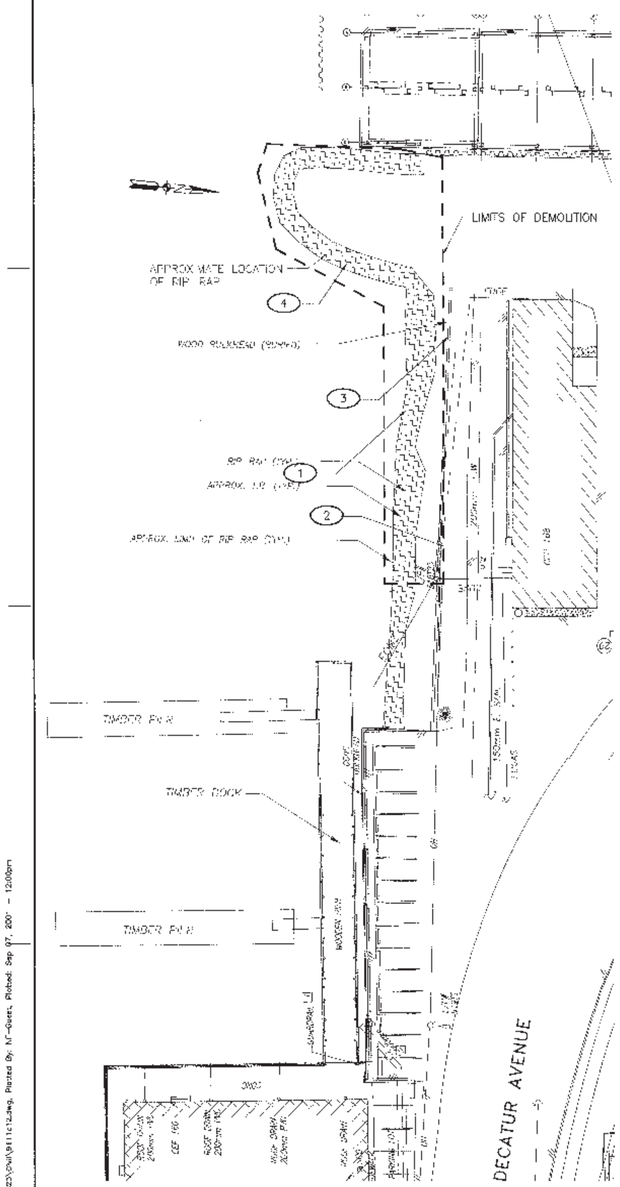

RELIEVING PLATFORM EXISTING DEMOLITION PLAN
SCALE= 1:300
BID OPTION #2

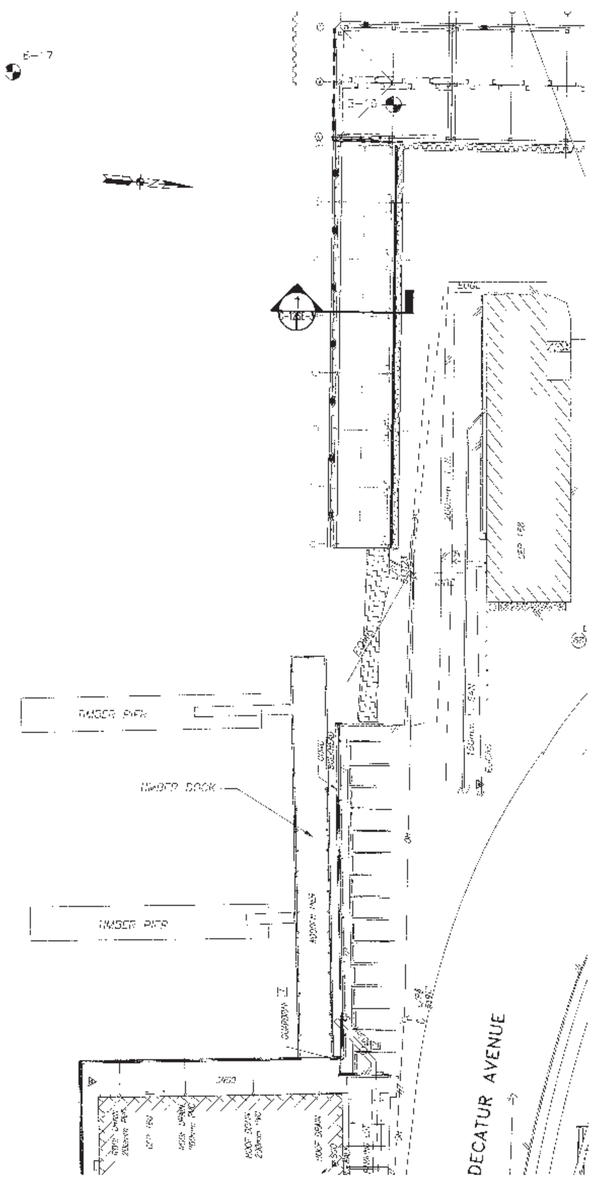

RELIEVING PLATFORM LAYOUT PLAN
SCALE= 1:300
BID OPTION #2

KEY NOTES:

1. REMOVE RIP-RAP AS NECESSARY TO CONSTRUCT NEW BULKHEAD AND RELIEVING PLATFORM.
2. REMOVE CHAIN GUARDRAIL AS NECESSARY FOR CONSTRUCTION. RETAIN FOR REINSTALLATION ACROSS FOOT OF DEMOLISHED PIERS.
3. REMOVE WOOD BULKHEAD AS NECESSARY FOR CONSTRUCTION.
4. THE RIP-RAP AND EARTHEN POINT CONSISTS OF STONE RIP-RAP AND CONCRETE DEBRIS UP TO 2M IN DIAMETER. DEBRIS MUST BE REMOVED TO A DEPTH OF -8.000(SLW) TO FACILITATE BULKHEAD AND RELIEVING PLATFORM CONSTRUCTION.

SHEET NOTES:

1. REFER TO SHEET C-1 FOR CIVIL LEGEND, NOTES AND ABBREVIATIONS.

GRAPHIC SCALE
1:300 0 5 10 15 20 25 30m

REVISIONS

DESIGNED & ENGINEERED BY: LANTDIV
GLENN & SADLER

REGISTERED PROFESSIONAL ENGINEER
No. 11479
9-7-01

ATLANTIC DIVISION
NAVAL STATION
NORFOLK, VA
PIER 3 REPLACEMENT
RELIEVING PLATFORM SITE DEMOLITION AND LAYOUT PLANS

SCALE: AS NOTED
DWG. NO. P-226
SPEC. NO. 05-99-9111
CONTR. CONTR. NO. N62470-99-B-9111
DRAWING NO. 4439614
SHEET 83 OF 236
C-12

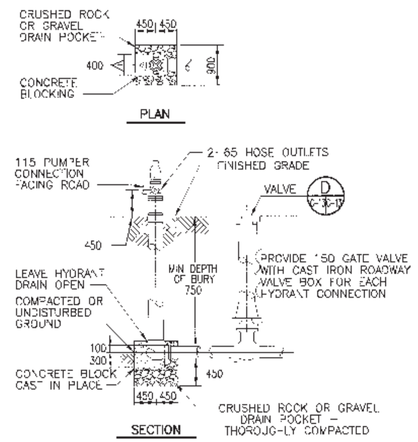

A FIRE HYDRANT

A C-10 C-13 — NOT TO SCALE

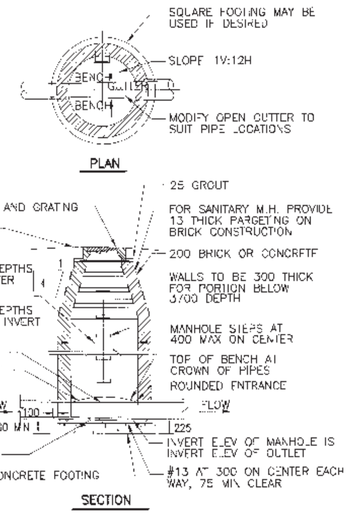

B MANHOLE

B C-10 C-11 C-13 — NOT TO SCALE

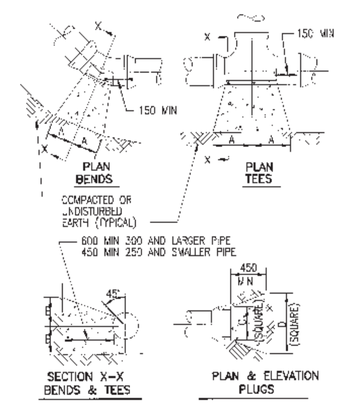

SIZE	1/4 BENDS		1/8 BENDS		1/16 BENDS		TEES		PLUGS	
	A	B	A	B	A	B	A	B	C	D
150	400	250	225	250	150	200	250	300	250	525
200	550	325	300	325	200	250	325	400	300	725
250	650	425	350	425	250	325	400	500	350	900
300	725	525	400	525	275	400	450	600	400	1025
350	875	600	475	600	300	500	550	675	450	1200
400	950	675	525	675	300	600	600	750	500	1350

C THRUST BLOCKS

C C-10 C-13 — NOT TO SCALE

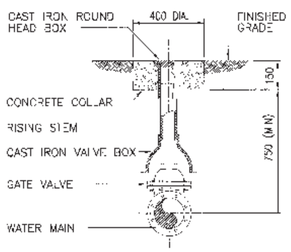

D DETAIL – VALVE

D C-10 C-13 — NOT TO SCALE

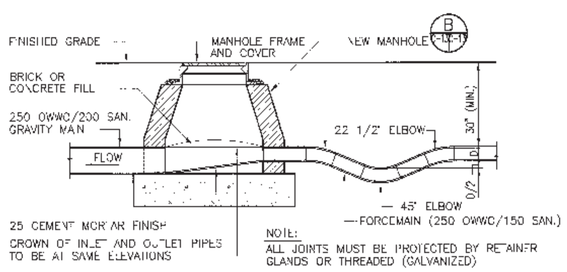

E FORCEMAIN CONNECTION AT MANHOLE

E C-12 C-13 — NOT TO SCALE

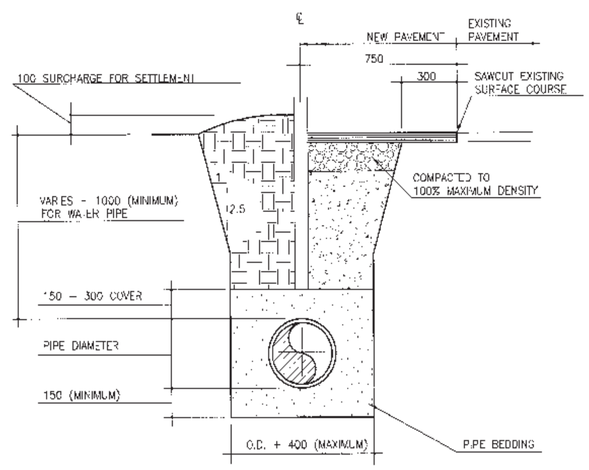

F PLASTIC PIPE BEDDING DETAIL

F C-10 C-13 C-11 — NOT TO SCALE

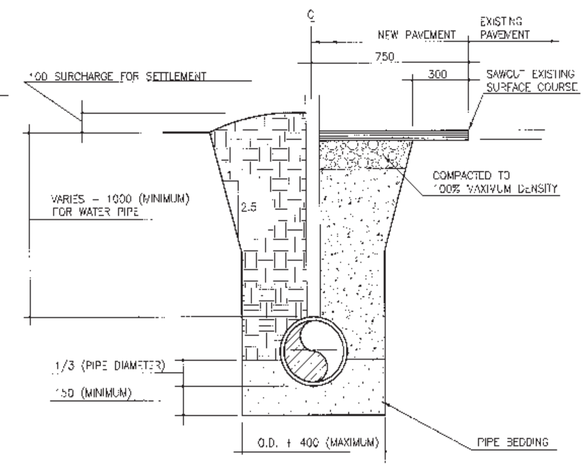

G NON-PLASTIC PIPE BEDDING DETAIL

G C-10 C-13 — NOT TO SCALE

REVISIONS

DESIGNED & ENGINEERED BY: LANTDIV — GLENN & SADLER

COMMONWEALTH OF VIRGINIA — ROBERT M. SADLER — No. 14479 — 9-7-01 — PROFESSIONAL ENGINEER

ACCEPTED - AS SHOWN

DATE

APPROVED

TO BE USED FOR CONSTRUCTION

PROJECT MANAGER KRB

ATLANTIC DIVISION — NORFOLK, VIRGINIA

NAVAL STATION NORFOLK, VIRGINIA

PIER 3 REPLACEMENT

UTILITY DETAILS

SCALE: AS NOTED

SPEC. NO. P 226

CONTR. NO. N62470-99-B-9111

DRAWING NO. 4439615

SHEET 64 OF 236

C-13

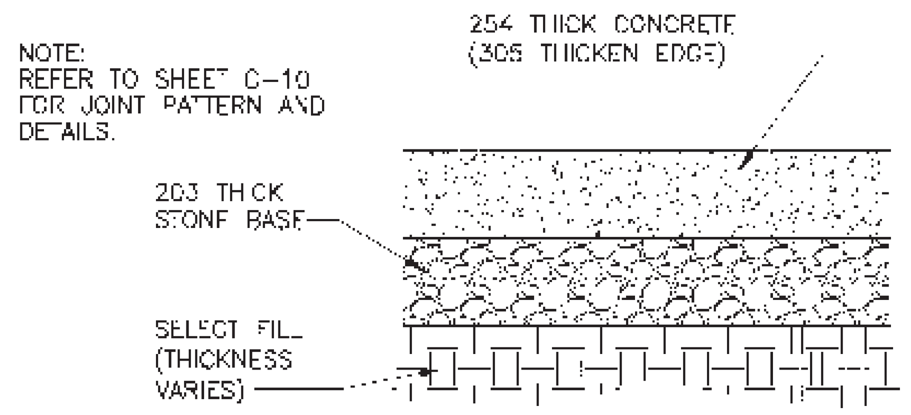

A C-15 C-14 NEW CONCRETE PAVEMENT SECTION

NOT TO SCALE

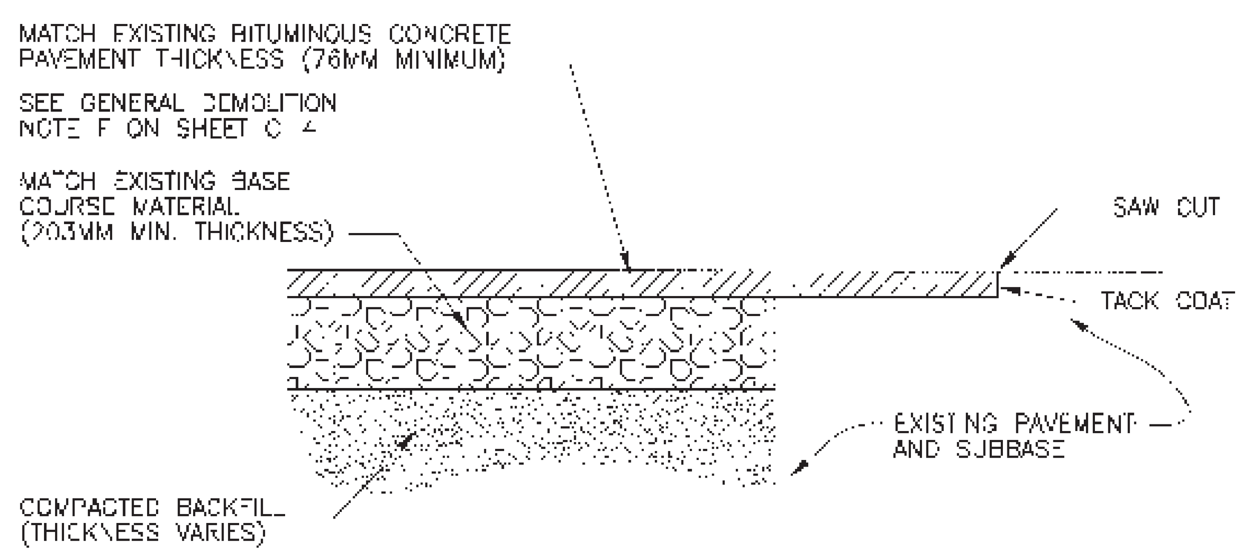

B C-6 C-14 NEW BITUMINOUS CONCRETE PAVEMENT FOR UTILITY CUT PATCHES

NOT TO SCALE

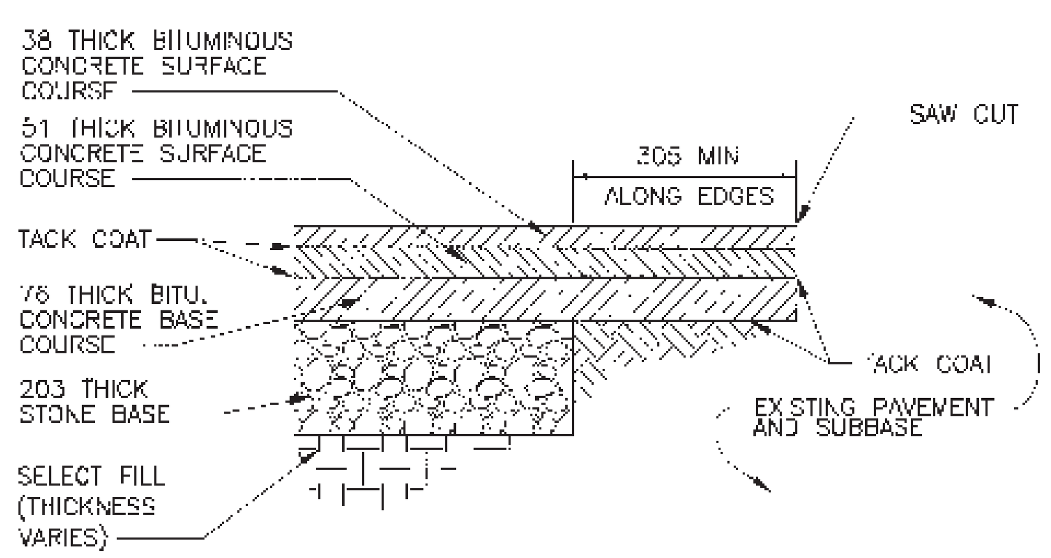

E C-6 C-7 C-14 NEW BITUMINOUS CONCRETE PAVEMENT SECTION

NOT TO SCALE

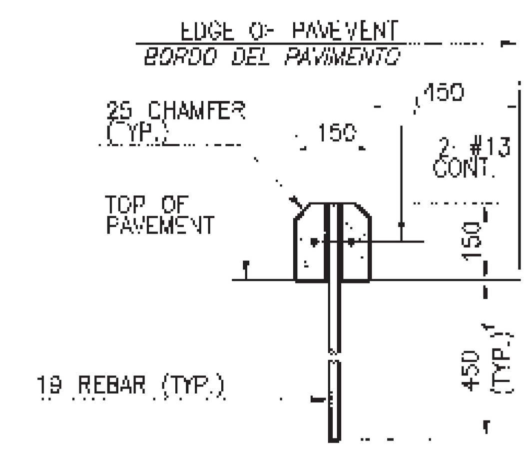

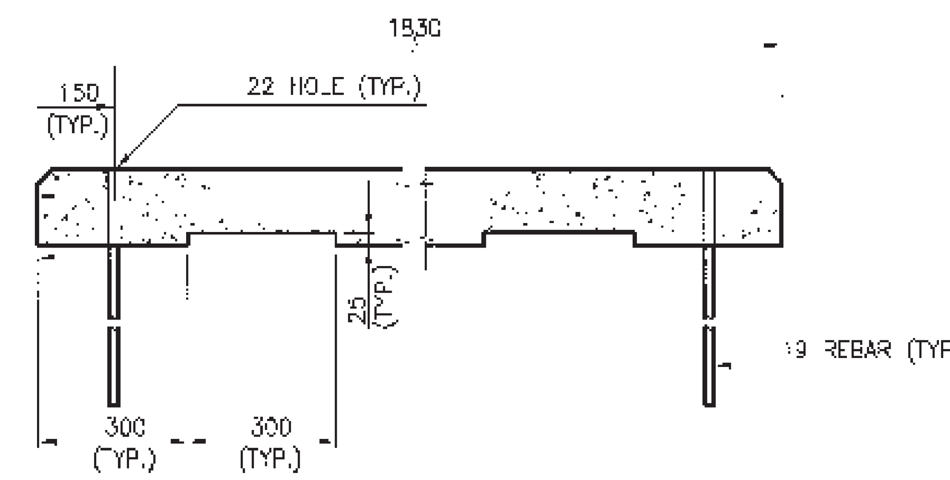

D C-6 C-7 C-14 PRECAST PARKING BLOCK

NOT TO SCALE

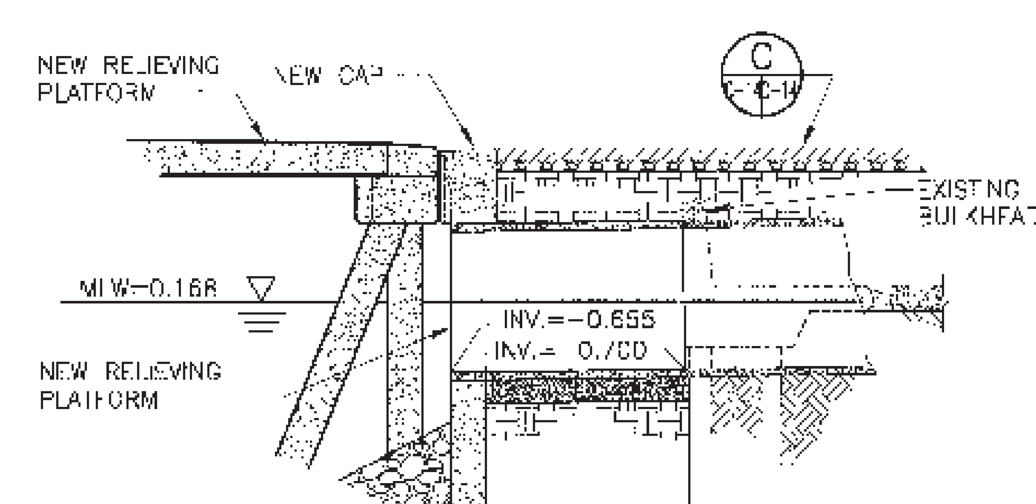

E C-10 C-14 SECTION

NOT TO SCALE

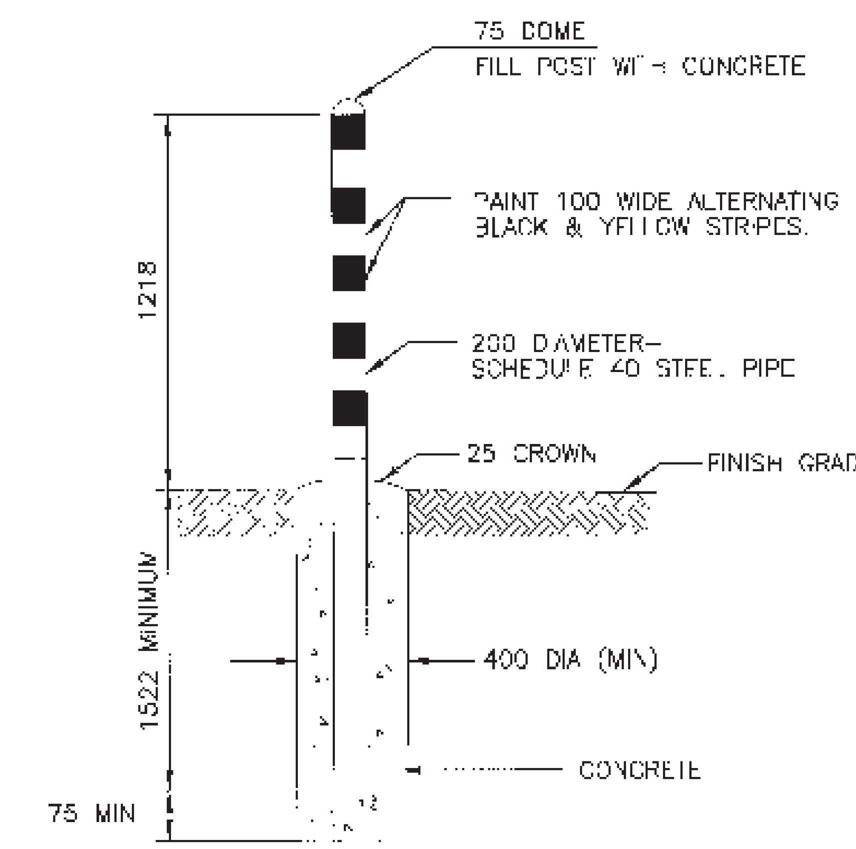

F C-10 C-14 BOLLARD DETAIL

NOT TO SCALE

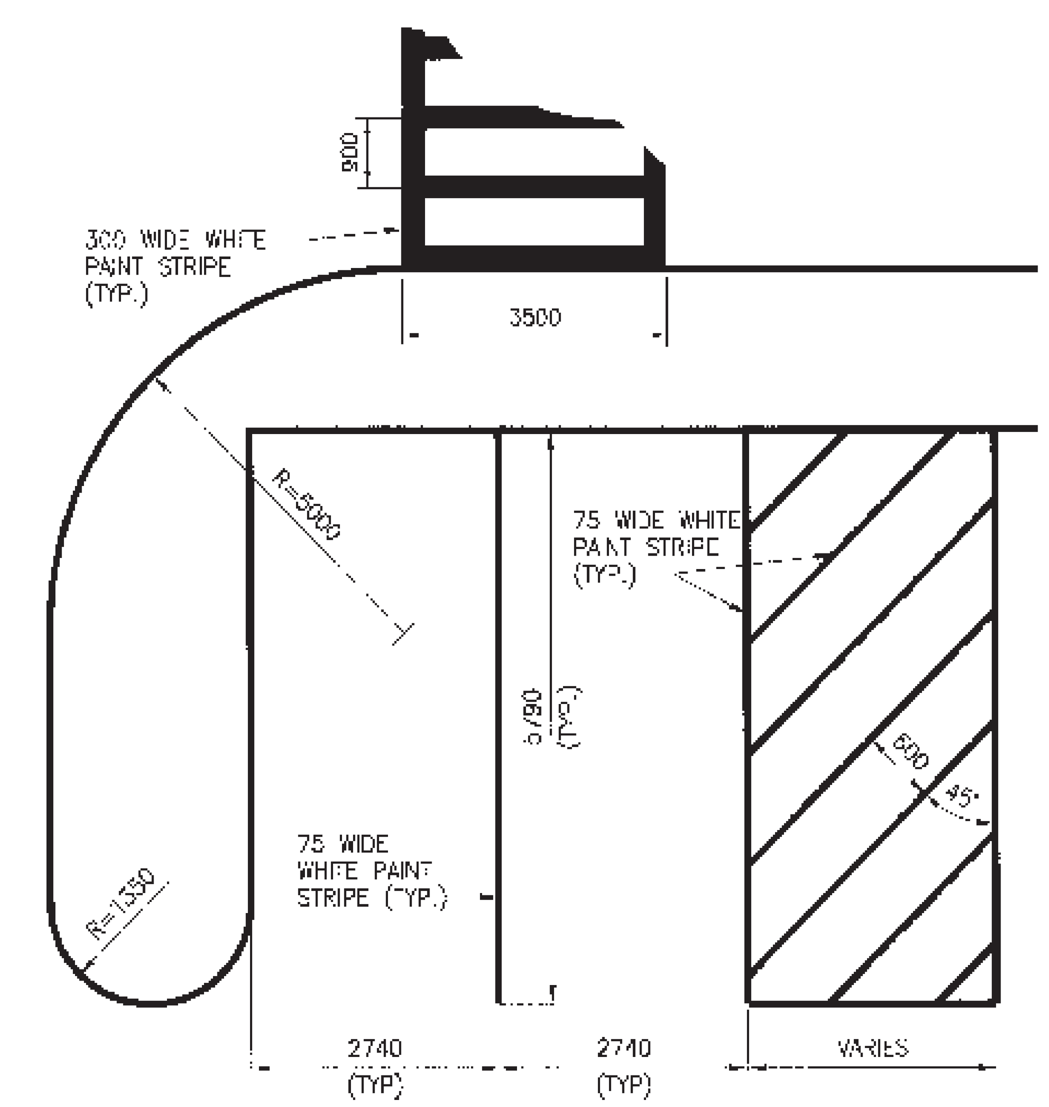

G C-6 C-7 C-14 PAINT STRIPING DETAIL

NOT TO SCALE

REVISIONS

DESIGNED & ENGINEERED BY: LANTDIV

GLENN & SADLER

COMMONWEALTH OF VIRGINIA ROBERT M. SAYRE No. 1 79 9-7-01 PROFESSIONAL ENGINEER

APPROVED

ACTIVITY - SATISFACTORY TO

DATE

APPROVED

FOR CDR NAVFAC

DATE

DESIGN ECC; DRAWN ATW; REVIEW RMS JSC; PROJECT MANAGER KRB; FIRE PROTECTION BJT; BRANCH MANAGER

DEPARTMENT OF THE NAVY — NAVAL FACILITIES ENGINEERING COMMAND — ATLANTIC DIVISION — NORFOLK, VIRGINIA

NAVAL STATION NORFOLK, VIRGINIA

PIER 3 REPLACEMENT

PAVEMENT DETAILS

CODE ID. NO. 80091 SIZE D

SCALE: AS NOTED

STA. PROJ. NO. P-226

SPEC. NO. 05-99-9111

CONSTR. CONTR. NO. N62470-99-9-9111

NAVFAC DRAWING NO. 4439616

SHEET 65 OF 236

C-14

P:\...\Civil\9111c14.dwg, Plotted By: NI-Guest, Plotted: Sep 07, 2001 - 12:03pm

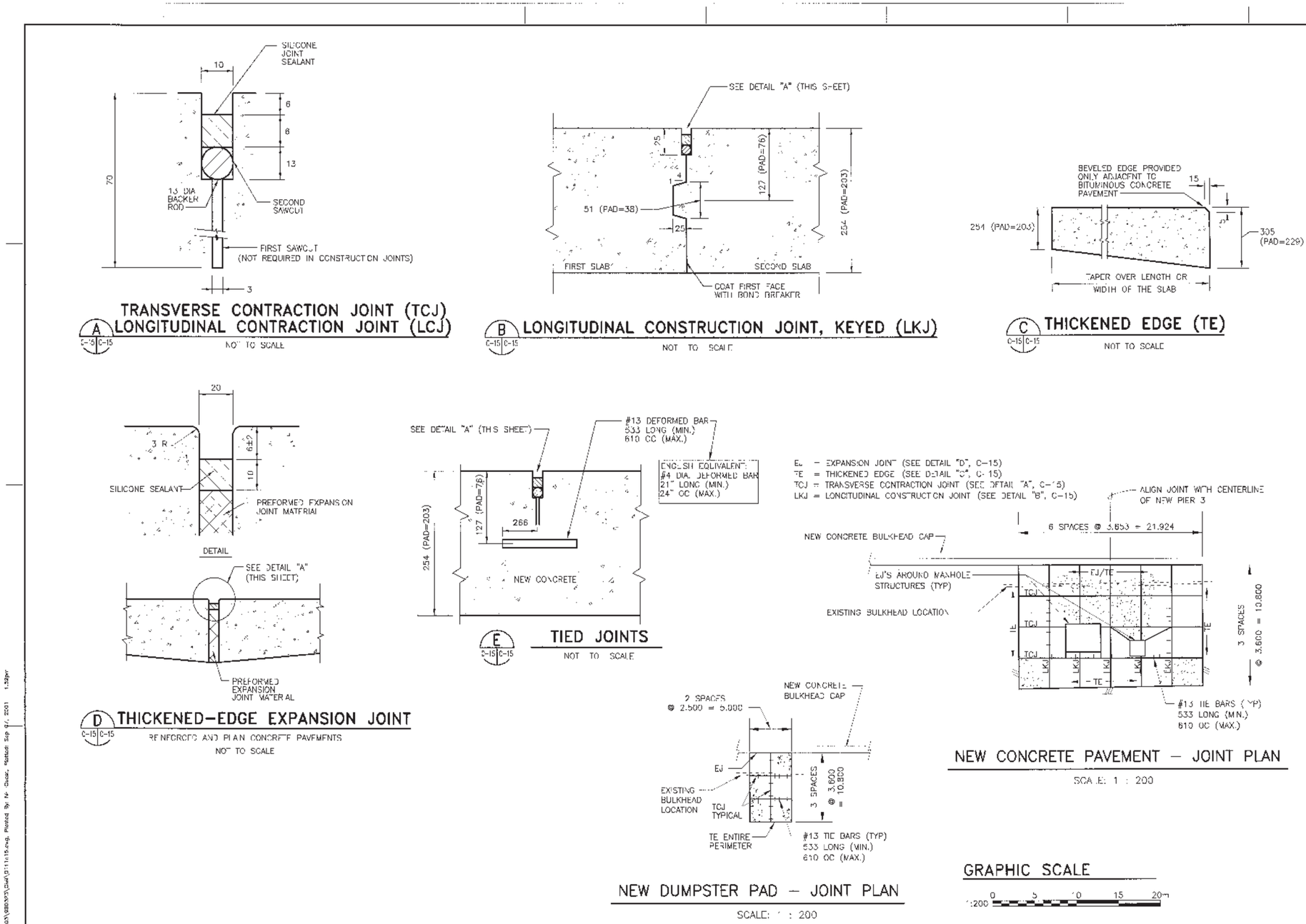

A TRANSVERSE CONTRACTION JOINT (TCJ)
LONGITUDINAL CONTRACTION JOINT (LCJ)
C-15 C-15
NOT TO SCALE

B LONGITUDINAL CONSTRUCTION JOINT, KEYED (LKJ)
C-15 C-15
NOT TO SCALE

C THICKENED EDGE (TE)
C-15 C-15
NOT TO SCALE

D THICKENED-EDGE EXPANSION JOINT
C-15 C-15
REINFORCED AND PLAIN CONCRETE PAVEMENTS
NOT TO SCALE

E TIED JOINTS
C-15 C-15
NOT TO SCALE

EJ = EXPANSION JOINT (SEE DETAIL "D", C-15)
TE = THICKENED EDGE (SEE DETAIL "C", C-15)
TCJ = TRANSVERSE CONTRACTION JOINT (SEE DETAIL "A", C-15)
LKJ = LONGITUDINAL CONSTRUCTION JOINT (SEE DETAIL "B", C-15)

NEW CONCRETE PAVEMENT – JOINT PLAN
SCALE: 1 : 200

NEW DUMPSTER PAD – JOINT PLAN
SCALE: 1 : 200

GRAPHIC SCALE
1:200 0 5 10 15 20m

REVISIONS

DESIGNED & ENGINEERED BY: LANTDIV
GLENN & SADLER

COMMONWEALTH OF VIRGINIA
ROBERT M. SILVER
No. 11479
9-7-01
PROFESSIONAL ENGINEER

PROJECT MANAGER KRB
FIRST PROJECTION EJT
BRANCH MANAGER
BRANCH DIRECTOR

NAVAL FACILITIES ENGINEERING COMMAND
ATLANTIC DIVISION
NORFOLK, VIRGINIA
NAVAL STATION
NORFOLK, VIRGINIA
PIER 3 REPLACEMENT
MISCELLANEOUS DETAILS

SCALE AS NOTED
DWG NO. P-226
SPEC. NO. 05-99-9111
CONSTR. CONTR. NO. N62470-99-B-9111
NAVAL DRAWING NO. 4439617
SHEET 66 OF 236
C-15

REPLACE

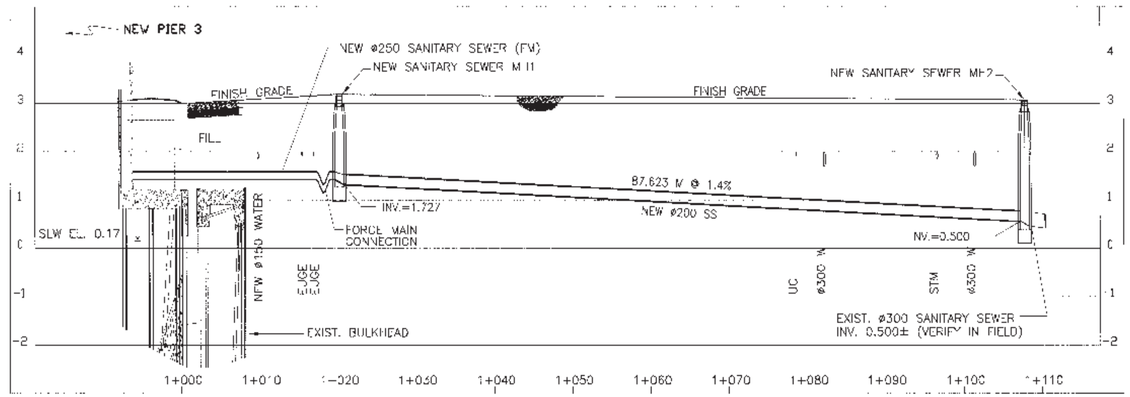

PROFILE – 200 SAN.

HOR. SCALE: 1:300
VER. SCALE: 1:50

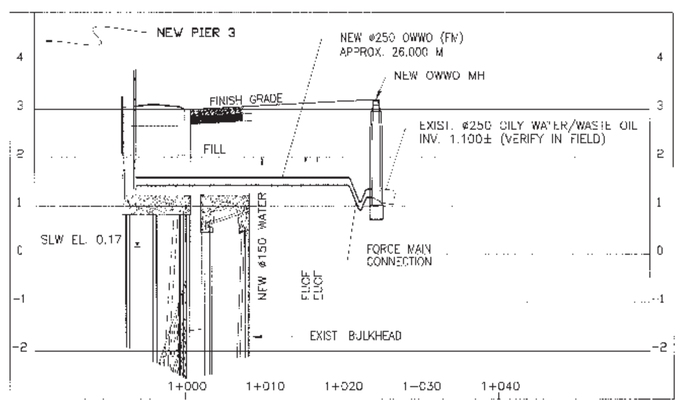

PROFILE – 250 OWWO

HOR. SCALE: 1:300
VER. SCALE: 1:50

GRAPHIC SCALES:

HOR.: 1:300 0 5 10 15 20 25 30m

VERT.: 1:50 0 0.5 1 2 3 4 5m

REVISIONS

LANTDIV

GLENN & SADLER

ROBERT M. SLAVIN
No. 14479
9-7-01
PROFESSIONAL ENGINEER

DEPARTMENT OF THE NAVY
NAVAL STATION
ATLANTIC DIVISION
NAVAL FACILITIES ENGINEERING COMMAND
NORFOLK, VIRGINIA

NAVAL STATION
NORFOLK, VIRGINIA

PIER 3 REPLACEMENT

UTILITY PROFILES

SCALE: AS NOTED
DWG. NO. P-226
PROJ. NO. 05-99-9111
CONTR. CONT'L NO. N6270-99-B-9111
TOTAL DRAWING NO. 4439618
SHEET 67 OF 236

C-16

P:\9803\980323\Civil\911-ctd.dwg, Plotted By: NF-Guest, Plotted: Sep 07, 2001 - 1:34pm

BORING NO.1

CLIENT: DEPARTMENT OF THE NAVY | JOB #: N3258 | BORING #: B-1 | SHEET: 1 OF 2
PROJECT NAME: P-226, PIER 3 REPLACEMENT | ARCHITECT-ENGINEER: LANTDIV
SITE LOCATION: NORFOLK NAVAL BASE, NORFOLK, VIRGINIA

DESCRIPTION OF MATERIAL — METRIC UNITS / SURFACE ELEVATION

WATER

SILTY SAND, GRAY AND BLACK, WET TO SATURATED, VERY LOOSE TO LOOSE. (SM)

SILTY CLAY, TRACE FINE SAND, GREENISH GRAY, WET TO SATURATED, VERY SOFT, (CL)

SILTY CLAY, GRAY, WET TO SATURATED, VERY SOFT, (CL)

SILTY CLAY, TRACE FINE SAND AND MARINE SHELL FRAGMENTS, GRAY, WET TO SATURATED, MEDIUM STIFF TO VERY STIFF. (CL-ML)

CONTINUED ON NEXT PAGE.

THE STRATIFICATION LINES REPRESENT THE APPROXIMATE BOUNDARY LINES BETWEEN SOIL TYPES IN-SITU THE TRANSITION MAY BE GRADUAL.

TOL 0.0m | GS TO | BORING STARTED 03-23-00 | BORING COMPLETED 03-23-00 | DATE OF DEPTH 0 | FOREMAN FDI | DRILLING METHOD WS

BORING NO.1

CLIENT: DEPARTMENT OF THE NAVY | JOB #: N3258 | BORING #: B-1 | SHEET: 2 OF 2
PROJECT NAME: P-226, PIER 3 REPLACEMENT | ARCHITECT-ENGINEER: LANTDIV
SITE LOCATION: NORFOLK NAVAL BASE, NORFOLK, VIRGINIA

SILTY CLAY, TRACE FINE SAND AND MARINE SHELL FRAGMENT STIFF TO VERY TO SATURATED, MEDIUM STIFF TO VERY STIFF. (CL-ML)

FINE SANDY AND CLAYEY SILT, WITH MARINE SHELL FRAGMENTS, GRAY, WET TO SATURATED, VERY STIFF, (ML)

CLAYEY FINE SAND, GRAY, WET TO SATURATED, MEDIUM DENSE, (SC-CL)

END OF BORING @ 33.53m

THE STRATIFICATION LINES REPRESENT THE APPROXIMATE BOUNDARY LINES BETWEEN SOIL TYPES IN-SITU THE TRANSITION MAY BE GRADUAL.

TOL 0.0m | GS TO | BORING STARTED 03-23-00 | BORING COMPLETED 03-23-00 | DATE OF DEPTH 0 | FOREMAN FDI | DRILLING METHOD WS

BORING NO.2

CLIENT: DEPARTMENT OF THE NAVY | JOB #: N3258 | BORING #: B-2 | SHEET: 1 OF 2
PROJECT NAME: P-226, PIER 3 REPLACEMENT | ARCHITECT-ENGINEER: LANTDIV
SITE LOCATION: NORFOLK NAVAL BASE, NORFOLK, VIRGINIA

DESCRIPTION OF MATERIAL — METRIC UNITS / SURFACE ELEVATION

WATER

CLAYEY SILT, BLACK, WET TO SATURATED, VERY SOFT, (ML)

FINE SANDY AND SILTY CLAY, GRAY, WET TO SATURATED, VERY SOFT, (CL)

CLAYEY FINE SAND, GRAY, WET TO SATURATED, LOOSE, (SC)

SILTY FINE SAND, TRACE MARINE SHELL FRAGMENTS, GRAY, WET TO SATURATED, LOOSE TO MEDIUM DENSE, (SM)

SILTY CLAY, TRACE FINE SAND AND FINE MARINE SHELL FRAGMENTS, GRAY, WET TO SATURATED, STIFF TO VERY SIFF, (CL)

SILTY FINE SAND, TRACE MARINE SHELL FRAGMENTS, GRAY, WET TO SATURATED MEDIUM DENSE, (SM)

SILTY CLAY, TRACE FINE SAND AND FINE MARINE SHELL FRAGMENTS, GRAY, WET TO SATURATED, STIFF TO VERY STIFF, (CL)

SILTY FINE SAND, TRACE MARINE SHELL FRAGMENTS, GRAY, WET TO SATURATED MEDIUM DENSE, (SM)

SILTY CLAY, TRACE FINE SAND AND FINE MARINE SHELL FRAGMENTS, GRAY, WET TO SATURATED, STIFF TO VERY SIFF, (CL)

CONTINUED ON NEXT PAGE.

THE STRATIFICATION LINES REPRESENT THE APPROXIMATE BOUNDARY LINES BETWEEN SOIL TYPES IN-SITU THE TRANSITION MAY BE GRADUAL.

TOL 0.0m | GS TO | BORING STARTED 03-15-00 | BORING COMPLETED 03-15-00 | DATE OF DEPTH 0 | FOREMAN FDI | DRILLING METHOD WS

BORING NO.2

CLIENT: DEPARTMENT OF THE NAVY | JOB #: N3258 | BORING #: B-2 | SHEET: 2 OF 2
PROJECT NAME: P-226, PIER 3 REPLACEMENT | ARCHITECT-ENGINEER: LANTDIV
SITE LOCATION: NORFOLK NAVAL BASE, NORFOLK, VIRGINIA

SILTY CLAY, TRACE FINE SAND AND FINE MARINE SHELL FRAGMENTS GRAY, WET TO SATURATED, STIFF TO VERY STIFF, (CL)

SILTY FINE SAND, TRACE CLAY, GRAY, WET TO SATURATED, MEDIUM DENSE, (SM)

CLAYEY FINE SAND, TRACE SILT, GRAY, WET TO SATURATED, MEDIUM DENSE, (SC)

SILTY CLAY, GRAY, WET TO SATURATED, VERY STIFF, (CL)

END OF BORING @ 33.53m

THE STRATIFICATION LINES REPRESENT THE APPROXIMATE BOUNDARY LINES BETWEEN SOIL TYPES IN-SITU THE TRANSITION MAY BE GRADUAL.

TOL 0.0m | GS TO | BORING STARTED 03-15-00 | BORING COMPLETED 03-15-00 | DATE OF DEPTH 0 | FOREMAN FDI | DRILLING METHOD WS

REVISIONS: DESCRIPTION | DATE | APPROVED

DESIGNED & ENGINEERED BY: LANTDIV NAVAL FACILITIES ENGINEERING COMMAND

APPROVED — ACTING – SATISFACTORY TO — DATE

APPROVED — FOR EFD FOR COMMANDER NAVFAC 7/27/01 — DATE

A/E — DESIGN MRS — DRAWN MRS — REVIEW DGB — IC — CHIEF ARCH./ENGR. — PROJECT MANAGER DWB — FIRE PROTECTION KJT — BRANCH MANAGER DGB — DESIGN DIRECTOR

DEPARTMENT OF THE NAVY — NAVAL FACILITIES ENGINEERING COMMAND — ATLANTIC DIVISION — NAVAL STATION NORFOLK, VIRGINIA — NAVAL STATION — PIER 3 REPLACEMENT — BORINGS 1 AND 2

CODE ID. NO. 80091 | SIZE D | SCALE: NONE | EFD NO. | STA. PROJ. NO. P-226 | SPEC. NO. 05-99-9111 | CONTR. CONTR. NO. N62470-99-B-9111 | NAVFAC DRAWING NO. 4439619 | SHEET 68 OF 236 | B-1

FILENAME: SP911181.DWG, PLOT SCALE: 1" = 1', SAVED ON 07/03/01 AT DB44, XREFS: NONE

BORING NO.3

CLIENT: DEPARTMENT OF THE NAVY | JOB #: N3258 | BORING #: B-3 | SHEET: 1 OF 2
PROJECT NAME: P-226, PIER 3 REPLACEMENT | ARCHITECT-ENGINEER: LANTDIV
SITE LOCATION: NORFOLK NAVAL BASE, NORFOLK, VIRGINIA

Depth (m)	Sample No.	Sample Type	Sample Distance (mm)	Recovery (mm)	Description of Material
					METRIC UNITS
					SURFACE ELEVATION
					WATER
	1	SS	610	610	FINE SANDY SILT, BLACK, SATURATED, VERY SOFT, (ML)
	2	SS	610	610	FINE SANDY SILT, TRACE MARINE SHELL FRAGMENTS, BLACK, SATURATED, VERY SOFT, (ML)
	3	SS	610	610	SILTY CLAY, GRAY, SATURATED, VERY SOFT TO MEDIUM STIFF, (CL)
	4	SS	610	610	
	5	SS	610	610	CLAYEY SILT, GRAY, WET TO SATURATED, MEDIUM STIFF, (ML)
	6	SS	610	610	SILTY CLAY, TRACE FINE SAND AND MARINE SHELL FRAGMENTS, GRAY, WET TO SATURATED, MEDIUM STIFF TO STIFF, (CL)
	7	SS	610	610	
	8	SS	610	610	PEAT, BROWN, WET TO SATURATED, (PT)
	9	SS	610	610	FINE SANDY AND CLAYEY SILT, TRACE FINE MARINE SHELL FRAGMENTS, GRAY, WET TO SATURATED, SOFT, (ML-CL)
	10	SS	610	610	SILTY CLAY, TRACE FINE SAND AND MARINE SHELL FRAGMENTS GRAY, WET TO SATURATED, VERY STIFF, (CL)

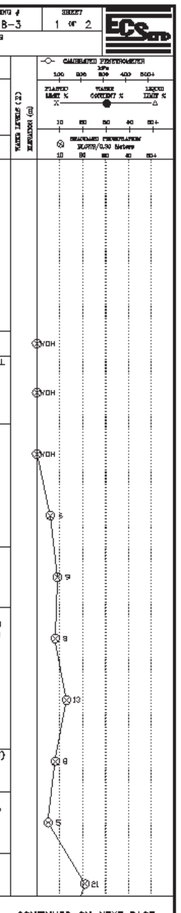

CONTINUED ON NEXT PAGE.

THE STRATIFICATION LINES REPRESENT THE APPROXIMATE BOUNDARY LINES BETWEEN SOIL TYPES IN-SITU THE TRANSITION MAY BE GRADUAL.

TOL 0.0m	GS TO	BORING STARTED 03-15-00	
TOL	BCR	ACR	BORING COMPLETED 03-15-00	DATE OF DEPTH 0
TOL			DRD FOREMAN FDI	DRILLING METHOD WS

BORING NO.3

CLIENT: DEPARTMENT OF THE NAVY | JOB #: N3258 | BORING #: B-3 | SHEET: 2 OF 2
PROJECT NAME: P-226, PIER 3 REPLACEMENT | ARCHITECT-ENGINEER: LANTDIV
SITE LOCATION: NORFOLK NAVAL BASE, NORFOLK, VIRGINIA

Depth (m)	Sample No.	Sample Type	Sample Distance (mm)	Recovery (mm)	Description of Material
					METRIC UNITS
					SURFACE ELEVATION
	11	SS	610	610	SILTY CLAY, TRACE FINE SAND AND MARINE SHELL FRAGMENTISH GRAY, WET TO SATURATED, VERY STIFF, (CL)
	12	SS	610	610	
	12	ST	610	560	SILTY SAND, TRACE MARINE SHELL FRAGMENTS, GRAY, WET TO SATURATED MEDIUM DENSE, (SM)
	14	SS	610	610	
	15	SS	610	610	
	16	SS	610	610	
	17	SS	610	610	
	18	SS	610	610	SILTY CLAY, TRACE FINE SAND AND MARINE SHELL FRAGMENTS, GRAY, WET TO SATURATED, VERY STIFF, (CL)
	19	SS	610	610	FINE SANDY CLAY, TRACE FINE MARINE SHALL FRAGMENTS, GRAY, WET TO SATURATED, HARD, (CL-SC)
	20	SS	610	610	SILTY CLAY, GRAY, WET TO SATURATED, VERY STIFF, (CL)
	21	SS	610	610	

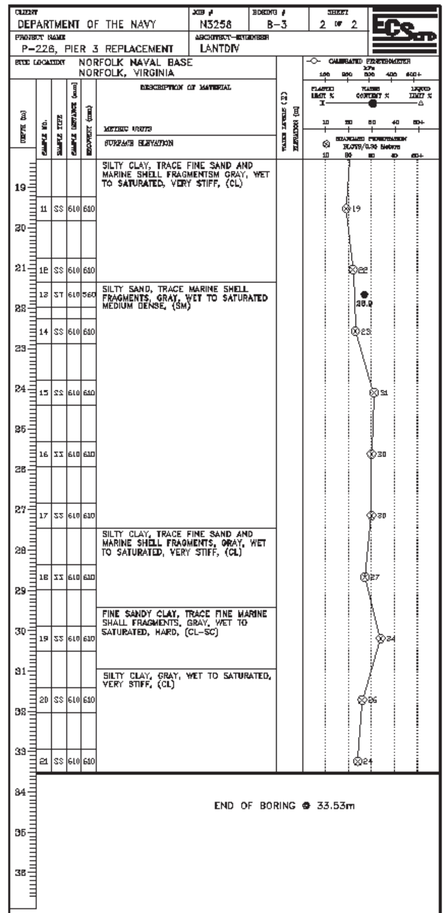

END OF BORING @ 33.53m

THE STRATIFICATION LINES REPRESENT THE APPROXIMATE BOUNDARY LINES BETWEEN SOIL TYPES IN-SITU THE TRANSITION MAY BE GRADUAL.

TOL 0.0m	GS TO	BORING STARTED 03-15-00	
TOL	BCR	ACR	BORING COMPLETED 03-15-00	DATE OF DEPTH 0
TOL			DRD FOREMAN FDI	DRILLING METHOD WS

BORING NO.4

CLIENT: DEPARTMENT OF THE NAVY | JOB #: N3258 | BORING #: B-4 | SHEET: 1 OF 2
PROJECT NAME: P-226, PIER 3 REPLACEMENT | ARCHITECT-ENGINEER: LANTDIV
SITE LOCATION: NORFOLK NAVAL BASE, NORFOLK, VIRGINIA

Depth (m)	Sample No.	Sample Type	Sample Distance (mm)	Recovery (mm)	Description of Material
					METRIC UNITS
					SURFACE ELEVATION
					WATER
	1	SS	610	610	CLAYEY SILT, BLACK, WET TO SATURATED, VERY SOFT, (ML)
	2	SS	610	610	
	3	SS	610	610	SILTY CLAY, GRAY, WET TO SATURATED, STIFF TO VERY STIFF, (CL)
	4	SS	610	610	
	5	SS	610	610	
	6	SS	610	610	
	7	SS	610	610	

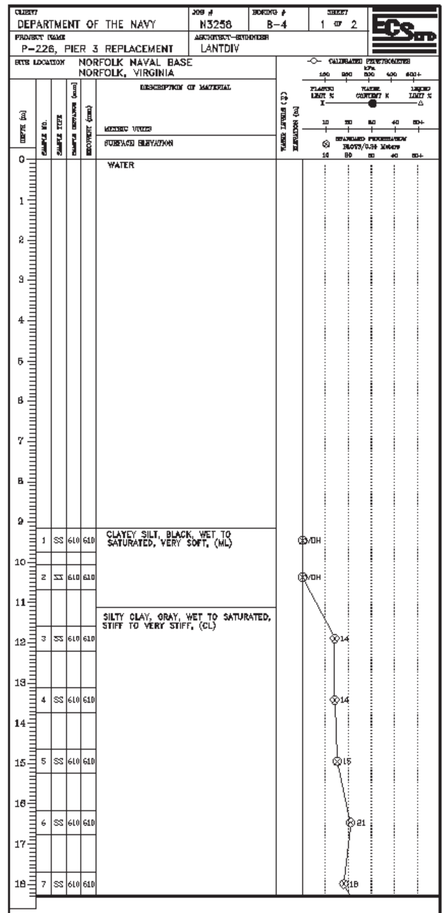

CONTINUED ON NEXT PAGE.

THE STRATIFICATION LINES REPRESENT THE APPROXIMATE BOUNDARY LINES BETWEEN SOIL TYPES IN-SITU THE TRANSITION MAY BE GRADUAL.

TOL 0.0m	GS TO	BORING STARTED 03-15-00	
TOL	BCR	ACR	BORING COMPLETED 03-15-00	DATE OF DEPTH 0
TOL			DRD FOREMAN FDI	DRILLING METHOD WS

BORING NO.4

CLIENT: DEPARTMENT OF THE NAVY | JOB #: N3258 | BORING #: B-4 | SHEET: 2 OF 2
PROJECT NAME: P-226, PIER 3 REPLACEMENT | ARCHITECT-ENGINEER: LANTDIV
SITE LOCATION: NORFOLK NAVAL BASE, NORFOLK, VIRGINIA

Depth (m)	Sample No.	Sample Type	Sample Distance (mm)	Recovery (mm)	Description of Material
					METRIC UNITS
					SURFACE ELEVATION
					SILTY CLAY, GRAY, WET TO SATURATED, STIFF TO VERY STIFF, (CL)
	8	SS	610	610	
	9	SS	610	610	
	10	SS	610	610	
	11	SS	610	610	
	12	SS	610	610	
	12	SS	610	610	
	14	SS	610	610	
	15	SS	610	610	
	16	SS	610	610	
	17	SS	610	610	

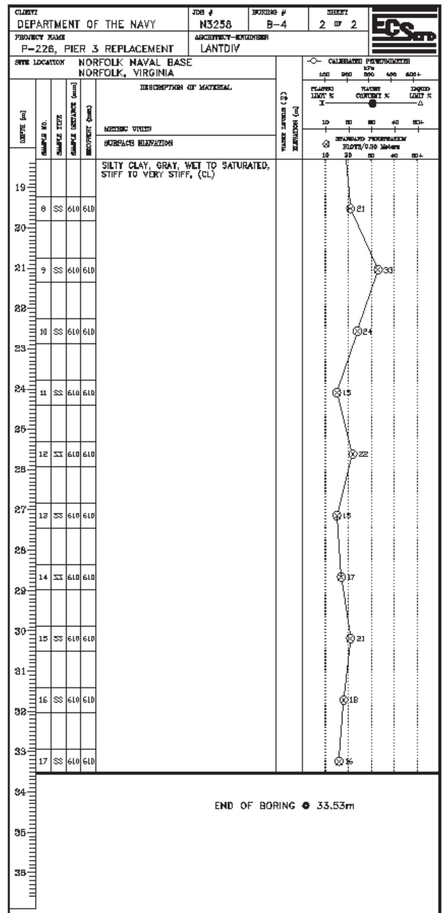

END OF BORING @ 33.53m

THE STRATIFICATION LINES REPRESENT THE APPROXIMATE BOUNDARY LINES BETWEEN SOIL TYPES IN-SITU THE TRANSITION MAY BE GRADUAL.

TOL 0.0m	GS TO	BORING STARTED 03-15-00	
TOL	BCR	ACR	BORING COMPLETED 03-15-00	DATE OF DEPTH 0
TOL			DRD FOREMAN FDI	DRILLING METHOD WS

REVISIONS: DESCRIPTION | DATE | APPROVED

DESIGNED & ENGINEERED BY: LANTDIV NAVAL FACILITIES ENGINEERING COMMAND

APPROVED
ACTIVITY – SATISFACTORY TO
DATE
APPROVED
FOR EFD FOR CONNAVFOR NAVFAC
7/27/01
DATE

A/E
DESIGN MRS
DRAWN MBS
REVIEW DGB
ID
CHIEF ARCH./ENGR.
PROJECT MANAGER DWB
FIRE PROTECTION KJT
BRANCH MANAGER DGB
DESIGN DIRECTOR

DEPARTMENT OF THE NAVY
NAVAL FACILITIES ENGINEERING COMMAND
ATLANTIC DIVISION
NAVAL STATION NORFOLK, VIRGINIA
NAVAL STATION
PIER 3 REPLACEMENT
BORINGS 3, AND 4

CODE ID. NO. 80021 | SIZE D
SCALE: NONE
EFD NO.
STA. PROJ. NO. P-226
SPEC. NO. 05-99-9111
CONTR. CONTR. NO. N62470-99-B-9111
NAVFAC DRAWING NO. 4439620
SHEET 69 OF 236
B-2

FILENAME: SP911182.DWG, PLOT SCALE: 1" = 1', SAVED ON 07/03/01 AT 08:30, XREFS: NONE

BORING NO.5

CLIENT: DEPARTMENT OF THE NAVY | JOB #: N3258 | BORING #: B-5 | SHEET: 1 OF 2
PROJECT NAME: P-226, PIER 3 REPLACEMENT | ARCHITECT-ENGINEER: LANTDIV
SITE LOCATION: NORFOLK NAVAL BASE, NORFOLK, VIRGINIA

Depth (m)	Sample No.	Sample Type	Sample Recovery (mm)	Blows/150 mm	Description of Material	Water Level (‡)	Calibrated Penetrometer (Qu kPa)
0					WATER		
15–18	1	SS	610	610	CLAYEY SILT, DARK GRAY AND BLACK, WET TO SATURATED,VERY SOFT, (ML)		VDH
16–18	2	SS	610	610			VDH
17–18	3	SS	610	630	SILTY CLAY, TRACE MARINE SHELL FRAGMENTS, GRAY, WET TO SATURATED, STIFF, (CL)		13

CONTINUED ON NEXT PAGE.

THE STRATIFICATION LINES REPRESENT THE APPROXIMATE BOUNDARY LINES BETWEEN SOIL TYPES IN-SITU THE TRANSITION MAY BE GRADUAL.

EL. 0.0m	DATUM: MSL	BORING STARTED	02-10-00
EL.	DCN	BORING COMPLETED	02-10-00
EL.	ACN	FOREMAN FDI	DRILLING METHOD HSA

BORING NO.5

CLIENT: DEPARTMENT OF THE NAVY | JOB #: N3258 | BORING #: B-5 | SHEET: 2 OF 2
PROJECT NAME: P-226, PIER 3 REPLACEMENT | ARCHITECT-ENGINEER: LANTDIV
SITE LOCATION: NORFOLK NAVAL BASE, NORFOLK, VIRGINIA

Depth (m)	Sample No.	Sample Type	Sample Recovery (mm)	Blows/150 mm	Description of Material	Water Level (‡)	Standard Penetration Blows/150 Meters
19					SILTY CLAY, TRACE MARINE SHELL FRAGMENTS, GRAY, WET TO SATURATED, STIFF, (CL)		
20	4	SS	610	630			14
21	5	SS	610	630			13
22	6	SS	610	630			15
23	7	SS	610	630			14
24	8	SS	610	630			12
25	9	SS	610	630			14
26	10	SS	610	630			12
27	11	SS	610	630	FINE SANDY AND SILTY CLAY, GRAY, WET TO SATURATED, STIFF, (CL)		13
28	12	SS	610	630	SILTY CLAY, TRACE FINE SAND AND MARINE SHELL FRAGMENTS, GRAY, WET TO SATURATED, SHELL TO VERY STIFF, (CL)		16
29	13	SS	610	630			14
30					END OF BORING @ 33.53m		

THE STRATIFICATION LINES REPRESENT THE APPROXIMATE BOUNDARY LINES BETWEEN SOIL TYPES IN-SITU THE TRANSITION MAY BE GRADUAL.

EL. 0.0m	DATUM: MSL	BORING STARTED	02-10-00
EL.	DCN	BORING COMPLETED	02-10-00
EL.	ACN	FOREMAN FDI	DRILLING METHOD HSA

BORING NO.6

CLIENT: DEPARTMENT OF THE NAVY | JOB #: N3258 | BORING #: B-6 | SHEET: 1 OF 1
PROJECT NAME: P-226, PIER 3 REPLACEMENT | ARCHITECT-ENGINEER: LANTDIV
SITE LOCATION: NORFOLK NAVAL BASE, NORFOLK, VIRGINIA

Depth (m)	Sample No.	Sample Type	Sample Recovery (mm)	Blows/150 mm	Description of Material	Water Level (‡)	Standard Penetration Blows/150 Meters
0					WATER		
15–18	1	SS	610	610	SILTY CLAY, TRACE MARINE SHELL FRAGMENTS, DARK GRAY AND BLACK, WET TO SATURATED, VERY SOFT, (CL)		VDH
16–18	2	SS	610	610	FINE SANDY CLAY, WITH MARINE SHELL FRAGMENTS, GRAY, WET TO SATURATED, VERY STIFF, (CL)		17
17–18	3	SS	610	610			22

END OF BORING @ 18.29m

THE STRATIFICATION LINES REPRESENT THE APPROXIMATE BOUNDARY LINES BETWEEN SOIL TYPES IN-SITU THE TRANSITION MAY BE GRADUAL.

EL. 0.0m	DATUM: MSL	BORING STARTED	02-11-00
EL.	DCN	BORING COMPLETED	02-11-00
EL.	ACN	FOREMAN FDI	DRILLING METHOD HSA

BORING NO.7

CLIENT: DEPARTMENT OF THE NAVY | JOB #: N3258 | BORING #: B-7 | SHEET: 1 OF 1
PROJECT NAME: P-226, PIER 3 REPLACEMENT | ARCHITECT-ENGINEER: LANTDIV
SITE LOCATION: NORFOLK NAVAL BASE, NORFOLK, VIRGINIA

Depth (m)	Sample No.	Sample Type	Sample Recovery (mm)	Blows/150 mm	Description of Material	Water Level (‡)	Standard Penetration Blows/150 Meters
0					WATER		
15–18	1	SS	610	610	SILTY CLAY, DARK GRAY AND BLACK, WET TO SATURATED, VERY SOFT, (CL)		VDH
16–18	2	SS	610	610	FINE SANDY CLAY, WITH MARINE SHELL FRAGMENTS, GRAY, WET TO SATURATED, MEDIUM STIFF, (CL)		10
17–18	3	SS	610	610			17

END OF BORING @ 18.29m

THE STRATIFICATION LINES REPRESENT THE APPROXIMATE BOUNDARY LINES BETWEEN SOIL TYPES IN-SITU THE TRANSITION MAY BE GRADUAL.

EL. 0.0m	DATUM: MSL	BORING STARTED	02-11-00
EL.	DCN	BORING COMPLETED	02-11-00
EL.	ACN	FOREMAN FDI	DRILLING METHOD HSA

REVISIONS: DESCRIPTION | DATE | APPROVED

DESIGNED & ENGINEERED BY: LANTDIV NAVAL FACILITIES ENGINEERING COMMAND

APPROVED: ACTIVITY – SATISFACTORY TO
DATE
APPROVED: FOR EFD FOR COMMANDER NAVFAC 7/27/01
DATE

AVE | EFD
DESIGN MBS
DRAWN MBS
REVIEW DGB
EP
CHIEF ARCH./ ENGR.
PROJECT MANAGER DWB
FIRE PROTECTION KJT
BRANCH MANAGER DGB
DESIGN DIRECTOR

NAVAL FACILITIES ENGINEERING COMMAND NORFOLK, VIRGINIA
DEPARTMENT OF THE NAVY | ATLANTIC DIVISION | NAVAL STATION NORFOLK, VIRGINIA
PIER 3 REPLACEMENT
BORINGS 5, 6, AND 7

CODE ID. NO. 80091 | SIZE D
SCALE: NONE
EFD NO.
STA. PROJ. NO. P-226
SPEC. NO. 05-99-9111
CONTR. CONTR. NO. N62470-99-B-9111
NAVFAC DRAWING NO. 4439621
SHEET 70 OF 236
B-3

FILENAME: SP911183.DWG, PLOT SCALE: 1" = 1', SAVED ON 07/03/01 AT 08:48, XREFS: NONE

BORING NO.8

CLIENT: DEPARTMENT OF THE NAVY | JOB #: N3258 | BORING #: B-8 | SHEET: 1 OF 1
PROJECT NAME: P-226, PIER 3 REPLACEMENT | ARCHITECT-ENGINEER: LANTDIV
SITE LOCATION: NORFOLK NAVAL BASE, NORFOLK, VIRGINIA

DEPTH (m)	SAMPLE NO.	SAMPLE TYPE	SAMPLE DISTURBANCE (mm)	RECOVERY (mm)	DESCRIPTION OF MATERIAL	WATER LEVEL (±)	ELEVATION (m)
					METRIC UNITS / SURFACE ELEVATION		
0					WATER		
15	1	SS	610	610	Silty CLAY, Dark Gray and Black, Wet to Saturated, Very Soft, (CL)	WDH	
16	2	SS	610	610	Fine Sandy CLAY, Trace Marine Shell Fragments, Gray, Wet to Saturated, Very Stiff, (CL)		96
18	3	SS	610	610			96

END OF BORING @ 18.29m

THE STRATIFICATION LINES REPRESENT THE APPROXIMATE BOUNDARY LINES BETWEEN SOIL TYPES IN-SITU THE TRANSITION MAY BE GRADUAL.

EL. 0.0m	DATUM	BORING STARTED	02-10-00
EL.	BCR / ACR	BORING COMPLETED	02-10-00
EL.		DRILL FOREMAN FDI	DRILLING METHOD HSA

BORING NO.9

CLIENT: DEPARTMENT OF THE NAVY | JOB #: N3258 | BORING #: B-9 | SHEET: 1 OF 1
PROJECT NAME: P-226, PIER 3 REPLACEMENT | ARCHITECT-ENGINEER: LANTDIV
SITE LOCATION: NORFOLK NAVAL BASE, NORFOLK, VIRGINIA

DEPTH (m)	SAMPLE NO.	SAMPLE TYPE	SAMPLE DISTURBANCE (mm)	RECOVERY (mm)	DESCRIPTION OF MATERIAL	WATER LEVEL (±)	ELEVATION (m)
					METRIC UNITS / SURFACE ELEVATION		
0					WATER		
15	1	SS	610	610	SILTY CLAY, GRAY AND BLACK, WET TO SATURATED, VERY SOFT, (CL)	WDH	
16	2	SS	610	610		WDH	
18	3	SS	610	610	FINE SANDY CLAY, TRACE MARINE SHELL FRAGMENTS, GRAY, WET TO SATURATED, VERY STIFF, (CL)		96

END OF BORING @ 18.29m

THE STRATIFICATION LINES REPRESENT THE APPROXIMATE BOUNDARY LINES BETWEEN SOIL TYPES IN-SITU THE TRANSITION MAY BE GRADUAL.

EL. 0.0m	DATUM	BORING STARTED	02-09-00
EL.	BCR / ACR	BORING COMPLETED	02-09-00
EL.		DRILL FOREMAN FDI	DRILLING METHOD HSA

BORING NO.10

CLIENT: DEPARTMENT OF THE NAVY | JOB #: N3258 | BORING #: B-10 | SHEET: 1 OF 1
PROJECT NAME: P-226, PIER 3 REPLACEMENT | ARCHITECT-ENGINEER: LANTDIV
SITE LOCATION: NORFOLK NAVAL BASE, NORFOLK, VIRGINIA

DEPTH (m)	SAMPLE NO.	SAMPLE TYPE	SAMPLE DISTURBANCE (mm)	RECOVERY (mm)	DESCRIPTION OF MATERIAL	WATER LEVEL (±)	ELEVATION (m)
					METRIC UNITS / SURFACE ELEVATION		
0					WATER		
18	1	SS	610	610	FINE SANDY CLAY, TRACE MARINE SHELL FRAGMENTS, GRAY, WET TO SATURATED, VERY SOFT, (CL)	WDH	

END OF BORING @ 17.98m

THE STRATIFICATION LINES REPRESENT THE APPROXIMATE BOUNDARY LINES BETWEEN SOIL TYPES IN-SITU THE TRANSITION MAY BE GRADUAL.

EL. 0.0m	DATUM	BORING STARTED	02-09-00
EL.	BCR / ACR	BORING COMPLETED	02-09-00
EL.		DRILL FOREMAN FDI	DRILLING METHOD HSA

BORING NO.11

CLIENT: DEPARTMENT OF THE NAVY | JOB #: N3258 | BORING #: B-11 | SHEET: 1 OF 1
PROJECT NAME: P-226, PIER 3 REPLACEMENT | ARCHITECT-ENGINEER: LANTDIV
SITE LOCATION: NORFOLK NAVAL BASE, NORFOLK, VIRGINIA

DEPTH (m)	SAMPLE NO.	SAMPLE TYPE	SAMPLE DISTURBANCE (mm)	RECOVERY (mm)	DESCRIPTION OF MATERIAL	WATER LEVEL (±)	ELEVATION (m)
					METRIC UNITS / SURFACE ELEVATION		
0					WATER		
18	1	SS	610	610	FINE SANDY CLAY, GRAY, WET TO SATURATED, VERY SOFT, (CL)	WDH	

END OF BORING @ 18.29m

THE STRATIFICATION LINES REPRESENT THE APPROXIMATE BOUNDARY LINES BETWEEN SOIL TYPES IN-SITU THE TRANSITION MAY BE GRADUAL.

EL. 0.0m	DATUM	BORING STARTED	02-09-00
EL.	BCR / ACR	BORING COMPLETED	02-09-00
EL.		DRILL FOREMAN FDI	DRILLING METHOD HSA

REVISIONS: DESCRIPTION | DATE | APPROVED

DESIGNED & ENGINEERED BY: LANTDIV NAVAL FACILITIES ENGINEERING COMMAND

APPROVED: ACTING – SATISFACTORY TO
DATE
APPROVED: FOR EFD FOR COMMANDER NAVFAC 7/27/01
DATE

AVE	EFD
DESIGN	MRS
DRAWN	MRS
REVIEW	DGB
SD	
CHIEF ARCH./ ENGR.	
PROJECT MANAGER	DWB
FIRE PROTECTION	KJT
BRANCH MANAGER	DGB
DESIGN DIRECTOR	

DEPARTMENT OF THE NAVY — NAVAL FACILITIES ENGINEERING COMMAND — NORFOLK, VIRGINIA
NAVAL STATION — ATLANTIC DIVISION — NAVAL STATION NORFOLK, VIRGINIA

PIER 3 REPLACEMENT

BORINGS 8, 9, 10, AND 11

CODE ID. NO. 80091 | SIZE D
SCALE: NONE
EFD NO.
STA. PROJ. NO. P-226
SPEC. NO. 05-99-9111
CONTR. CONTR. NO. N62470-99-B-9111
NAVFAC DRAWING NO. 4439622
SHEET 71 OF 236
B-4

FILENAME: SP91118A.DWG, PLOT SCALE: 1" = 1', SAVED ON 07/03/01 AT 08:33, XREFS: NONE

BORING NO.12

CLIENT: DEPARTMENT OF THE NAVY | JOB #: N3258 | BORING #: B-12 | SHEET: 1 OF 1
PROJECT NAME: P-226, PIER 3 REPLACEMENT | ARCHITECT-ENGINEER: LANTDIV
SITE LOCATION: NORFOLK NAVAL BASE, NORFOLK, VIRGINIA

DEPTH (m)	SAMPLE NO.	SAMPLE TYPE	SAMPLE DISTURB (mm)	RECOVERY (mm)	DESCRIPTION OF MATERIAL (METRIC UNITS / SURFACE ELEVATION)	WATER LEVELS (m) / REMARKS (m)	CALIBRATED PENETROMETER 100 200 300 400 500+ (PLASTIC LIMIT % X, WATER CONTENT %, LIQUID LIMIT % △)	STANDARD PENETRATION BLOWS/0.30 Meters 10 20 30 40 50+
0					WATER			
15	1	SS	610	610	SILTY CLAY, DARK GRAY AND BLACK, WET TO SATURATED, VERY SOFT, (CL)			WOH
16	2	SS	610	610				WOH
18	3	SS	610	610	FINE SANDY CLAY, TRACE MARINE SHELL FRAGMENTS, GRAY, WET TO SATURATED, STIFF, (CL)			15

END OF BORING @ 18.29m

THE STRATIFICATION LINES REPRESENT THE APPROXIMATE BOUNDARY LINES BETWEEN SOIL TYPES IN-SITU THE TRANSITION MAY BE GRADUAL.

EL. 0.0m	DATUM	BORING STARTED	02-09-00
EL.	DCE / ACE	BORING COMPLETED	02-09-00
EL.		FOREMAN FDI	DRILLING METHOD HSA

BORING NO.13

CLIENT: DEPARTMENT OF THE NAVY | JOB #: N3258 | BORING #: B-13 | SHEET: 1 OF 1
PROJECT NAME: P-226, PIER 3 REPLACEMENT | ARCHITECT-ENGINEER: LANTDIV
SITE LOCATION: NORFOLK NAVAL BASE, NORFOLK, VIRGINIA

DEPTH (m)	SAMPLE NO.	SAMPLE TYPE	SAMPLE DISTURB (mm)	RECOVERY (mm)	DESCRIPTION OF MATERIAL (METRIC UNITS / SURFACE ELEVATION)	WATER LEVELS (m) / REMARKS (m)	CALIBRATED PENETROMETER 100 200 300 400 500+ (PLASTIC LIMIT % X, WATER CONTENT %, LIQUID LIMIT % △)	STANDARD PENETRATION BLOWS/0.30 Meters 10 20 30 40 50+
0					WATER			
15	1	SS	610	610	SILTY CLAY, DARK GRAY AND BLACK, WET TO SATURATED, VERY SOFT, (CL)			WOH
16	2	SS	610	610	FINE TO MEDIUM SANDY CLAY, TRACE MARINE SHELL FRAGMENTS, GRAY, WET TO SATURATED, VERY STIFF, (CL-SC)			22
18	3	SS	610	610				85

END OF BORING @ 18.29m

THE STRATIFICATION LINES REPRESENT THE APPROXIMATE BOUNDARY LINES BETWEEN SOIL TYPES IN-SITU THE TRANSITION MAY BE GRADUAL.

EL. 0.0m	DATUM	BORING STARTED	02-09-00
EL.	DCE / ACE	BORING COMPLETED	02-09-00
EL.		FOREMAN FDI	DRILLING METHOD HSA

BORING NO.14

CLIENT: DEPARTMENT OF THE NAVY | JOB #: N3258 | BORING #: B-14 | SHEET: 1 OF 1
PROJECT NAME: P-226, PIER 3 REPLACEMENT | ARCHITECT-ENGINEER: LANTDIV
SITE LOCATION: NORFOLK NAVAL BASE, NORFOLK, VIRGINIA

DEPTH (m)	SAMPLE NO.	SAMPLE TYPE	SAMPLE DISTURB (mm)	RECOVERY (mm)	DESCRIPTION OF MATERIAL (METRIC UNITS / SURFACE ELEVATION)	WATER LEVELS (m) / REMARKS (m)	CALIBRATED PENETROMETER 100 200 300 400 500+ (PLASTIC LIMIT % X, WATER CONTENT %, LIQUID LIMIT % △)	STANDARD PENETRATION BLOWS/0.30 Meters 10 20 30 40 50+
0					WATER			
15	1	SS	610	610	FINE SANDY CLAY, TRACE MARINE SHELL FRAGMENTS, DARK GRAY AND BLACK, WET TO SATURATED, VERY SOFT,(CL) [ORGANIC ODOR]			WOH
16	2	SS	610	610	FINE TO MEDIUM SANDY CLAY, WITH MARINE SHELL FRAGMENTS, GRAY, WET TO SATURATED, VERY STIFF, (CL)			20
18	3	SS	610	610				24

END OF BORING @ 18.29m

THE STRATIFICATION LINES REPRESENT THE APPROXIMATE BOUNDARY LINES BETWEEN SOIL TYPES IN-SITU THE TRANSITION MAY BE GRADUAL.

EL. 0.0m	DATUM	BORING STARTED	02-09-00
EL.	DCE / ACE	BORING COMPLETED	02-09-00
EL.		FOREMAN FDI	DRILLING METHOD HSA

BORING NO.15

CLIENT: DEPARTMENT OF THE NAVY | JOB #: N3258 | BORING #: B-15 | SHEET: 1 OF 1
PROJECT NAME: P-226, PIER 3 REPLACEMENT | ARCHITECT-ENGINEER: LANTDIV
SITE LOCATION: NORFOLK NAVAL BASE, NORFOLK, VIRGINIA

DEPTH (m)	SAMPLE NO.	SAMPLE TYPE	SAMPLE DISTURB (mm)	RECOVERY (mm)	DESCRIPTION OF MATERIAL (METRIC UNITS / SURFACE ELEVATION)	WATER LEVELS (m) / REMARKS (m)	CALIBRATED PENETROMETER 100 200 300 400 500+ (PLASTIC LIMIT % X, WATER CONTENT %, LIQUID LIMIT % △)	STANDARD PENETRATION BLOWS/0.30 Meters 10 20 30 40 50+
0					WATER			
15	1	SS	610	610	SILTY CLAY, DARK GRAY AND BLACK, WET TO SATURATED, VERY SOFT, (CL) [PETROLEUM ODOR]			WOH
16	2	SS	610	610	FINE SANDY CLAY, WITH MARINE SHELL FRAGMENTS, GRAY, WET TO SATURATED, VERY STIFF, (CL)			24
18	3	SS	610	610				25
	4	SS	610	610				25

END OF BORING @ 18.29m

THE STRATIFICATION LINES REPRESENT THE APPROXIMATE BOUNDARY LINES BETWEEN SOIL TYPES IN-SITU THE TRANSITION MAY BE GRADUAL.

EL. 0.0m	DATUM	BORING STARTED	02-09-00
EL.	DCE / ACE	BORING COMPLETED	02-09-00
EL.		FOREMAN FDI	DRILLING METHOD HSA

REVISIONS: DESCRIPTION | DATE | APPROVED

DESIGNED & ENGINEERED BY: LANTDIV NAVAL FACILITIES ENGINEERING COMMAND

APPROVED: ACTIVITY – SATISFACTORY TO
DATE
APPROVED: FOR EFD FOR COMMANDER NAVFAC 7/27/01
DATE

A/E	EFD
DESIGN	MBS
DRAWN	MBS
REVIEW	DGB
SD	
CHIEF ARCH./ ENGR.	
PROJECT MANAGER	DWB
FIRE PROTECTION	KJT
BRANCH MANAGER	DGB
DESIGN DIRECTOR	

DEPARTMENT OF THE NAVY – NAVAL STATION
ATLANTIC DIVISION – NAVAL FACILITIES ENGINEERING COMMAND
NORFOLK, VIRGINIA

NAVAL STATION NORFOLK, VIRGINIA
PIER 3 REPLACEMENT
BORINGS 12, 13, 14, AND 15

CODE ID. NO. 80091 | SIZE D
SCALE: NONE
EFD NO.
STA. PASS. NO. P-226
SPEC. NO. 05-99-9111
CONTR. CONTR. NO. N62470-99-B-9111
NAVFAC DRAWING NO. 4439623
SHEET 72 OF 236
B-5

FILENAME: SP911185.DWG, PLOT SCALE: 1" = 1', SAVED ON 07/03/01 AT 08:38, XREFS: NONE

BORING NO.16

CLIENT: DEPARTMENT OF THE NAVY | JOB #: N3258 | BORING #: B-16 | SHEET: 1 OF 2
PROJECT NAME: P-226, PIER 3 REPLACEMENT | ARCHITECT-ENGINEER: LANTDIV
SITE LOCATION: NORFOLK NAVAL BASE, NORFOLK, VIRGINIA

Depth (m)	Sample No.	Sample Type	Sample Distance (mm)	Recovery (mm)	Description of Material (Metric Units / Surface Elevation)	Water Level (±) Elevation (m)
0					WATER	
10	1	SS	610	610	CLAYEY SILT, TRACE MARINE SHELL FRAGMENTS, DARK GRAY AND BLACK, WET TO SATURATED, VERY SOFT, (ML)	WOH
10	2	SS	610	610		WOH
11–18					FINE SANDY CLAY, WITH MARINE SHELL FRAGMENTS, GRAY, WET TO SATURATED, STIFF TO VERY STIFF, (CL)	
13	3	SS	610	610		14
14	4	SS	610	610		24
15	5	SS	610	610		15
17	6	SS	610	610		20
18	7	SS	610	610		18

Calibrated Penetrometer: Plastic Limit % / Water Content % / Liquid Limit %
Standard Penetration Blows/0.30 Meters

CONTINUED ON NEXT PAGE.

THE STRATIFICATION LINES REPRESENT THE APPROXIMATE BOUNDARY LINES BETWEEN SOIL TYPES IN-SITU THE TRANSITION MAY BE GRADUAL.

T.L. 0.0m	GR TO	BORING STARTED	02-08-00
T.L.	DCE ACE	BORING COMPLETED	02-08-00
T.L.		SDS FOREMAN FDI	DRILLING METHOD HSA

BORING NO.16

CLIENT: DEPARTMENT OF THE NAVY | JOB #: N3258 | BORING #: B-16 | SHEET: 2 OF 2
PROJECT NAME: P-226, PIER 3 REPLACEMENT | ARCHITECT-ENGINEER: LANTDIV
SITE LOCATION: NORFOLK NAVAL BASE, NORFOLK, VIRGINIA

Depth (m)	Sample No.	Sample Type	Sample Distance (mm)	Recovery (mm)	Description of Material (Metric Units / Surface Elevation)	Water Level (±) Elevation (m)
19–22					FINE SANDY CLAY, WITH MARINE SHELL FRAGMENTS, GRAY, WET TO SATURATED, STIFF TO VERY STIFF, (CL)	
19	8	SS	610	610		20
21	9	SS	610	610		19
22–23					CLAYEY FINE SAND, WITH MARINE SHELL FRAGMENTS, GRAY, WET TO SATURATED, MEDIUM DENSE, (SC)	
22	10	SS	610	610		25
23–25					FINE SANDY CLAY, WITH MARINE SHELL FRAGMENTS, GRAY, WET TO SATUATED, VERY STIFF, (CL)	
24	11	SS	610	610		24
26	12	SS	610	610		25
27	12	SS	610	610		22

END OF BORING @ 27.43m

Calibrated Penetrometer: Plastic Limit % / Water Content % / Liquid Limit %
Standard Penetration Blows/0.30 Meters

THE STRATIFICATION LINES REPRESENT THE APPROXIMATE BOUNDARY LINES BETWEEN SOIL TYPES IN-SITU THE TRANSITION MAY BE GRADUAL.

T.L. 0.0m	GR TO	BORING STARTED	02-08-00
T.L.	DCE ACE	BORING COMPLETED	02-08-00
T.L.		SDS FOREMAN FDI	DRILLING METHOD HSA

BORING NO.17

CLIENT: DEPARTMENT OF THE NAVY | JOB #: N3258 | BORING #: B-17 | SHEET: 1 OF 2
PROJECT NAME: P-226, PIER 3 REPLACEMENT | ARCHITECT-ENGINEER: LANTDIV
SITE LOCATION: NORFOLK NAVAL BASE, NORFOLK, VIRGINIA

Depth (m)	Sample No.	Sample Type	Sample Distance (mm)	Recovery (mm)	Description of Material (Metric Units / Surface Elevation)	Water Level (±) Elevation (m)
0					WATER	
14–18					CLAYEY SILT, DARK GRAY, WET TO SATURATED, VERY SOFT, (ML)	
14	1	SS	610	610		WOH
15–16					SILTY CLAY, TRACE MARINE SHELL FRAGMENTS, GRAY, WET TO SATURATED, VERY SOFT, (CL-ML)	
15	2	SS	610	610		WOH
16–18					SILTY CLAY, TRACE FINE SAND AND MARINE SHELL FRAGMENTS, GRAY, WET TO SATURATED, STIFF TO HARD, (CL)	
16	3	SS	610	610		15
18	4	SS	610	610		26

Calibrated Penetrometer: Plastic Limit % / Water Content % / Liquid Limit %
Standard Penetration Blows/0.30 Meters

CONTINUED ON NEXT PAGE.

THE STRATIFICATION LINES REPRESENT THE APPROXIMATE BOUNDARY LINES BETWEEN SOIL TYPES IN-SITU THE TRANSITION MAY BE GRADUAL.

T.L. 0.0m	GR TO	BORING STARTED	02-11-00
T.L.	DCE ACE	BORING COMPLETED	02-11-00
T.L.		SDS FOREMAN FDI	DRILLING METHOD HSA

BORING NO.17

CLIENT: DEPARTMENT OF THE NAVY | JOB #: N3258 | BORING #: B-17 | SHEET: 2 OF 2
PROJECT NAME: P-226, PIER 3 REPLACEMENT | ARCHITECT-ENGINEER: LANTDIV
SITE LOCATION: NORFOLK NAVAL BASE, NORFOLK, VIRGINIA

Depth (m)	Sample No.	Sample Type	Sample Distance (mm)	Recovery (mm)	Description of Material (Metric Units / Surface Elevation)	Water Level (±) Elevation (m)
19–22					SILTY CLAY, TRACE FINE SAND AND MARINE SHELL FRAGMENTS, GRAY, WET TO SATURATED, STIFF TO HARD, (CL)	
19	5	SS	610	610		17
21	6	SS	610	610		18
22	7	SS	610	610		19
23–25					FINE SANDY AND SILTY CLAY, WITH MARINE SHELL FRAGMENTS, GRAY, WET TO SATURATED, HARD, (CL-ML)	
24	8	SS	610	610		23
25	9	SS	610	610		24
26–27					SILTY CLAY, TRACE FINE SAND AND MARINE SHELL FRAGMENTS, GRAY, WET TO SATURATED, VERY STIFF, (CL)	
27	10	SS	610	610		29
28–29					CLAYEY FINE SAND, WITH SILT, TRACE MARINE SHELL FRAGMENTS, GRAY, WET TO SATURATED, MEDIUM DENSE, (SC-CL)	
29	11	SS	610	610		24
30–31					SILTY FINE SAND, WITH CLAY, TRACE MARINE SHELL FRAGMENTS, WET TO SATURATED, MEDIUM DENSE, (SM-ML)	
31	12	SS	610	610		28
32–33					FINE SANDY AND SILTY CLAY, TRACE MARINE SHELL FRAGMENTS, GRAY, WET TO SATURATED, VERY STIFF, (CL)	
32	12	SS	610	610		22
33–34					SILTY CLAY, TRACE FINE SAND AND MARINE SHELL FRAGMENTS, GRAY, WET TO SATURATED, VERY STIFF, (CL-ML)	
33	14	SS	610	610		24

END OF BORING @ 33.53m

Calibrated Penetrometer: Plastic Limit % / Water Content % / Liquid Limit %
Standard Penetration Blows/0.30 Meters

THE STRATIFICATION LINES REPRESENT THE APPROXIMATE BOUNDARY LINES BETWEEN SOIL TYPES IN-SITU THE TRANSITION MAY BE GRADUAL.

T.L. 0.0m	GR TO	BORING STARTED	02-11-00
T.L.	DCE ACE	BORING COMPLETED	02-11-00
T.L.		SDS FOREMAN FDI	DRILLING METHOD HSA

REVISIONS			
SYM.	DESCRIPTION	DATE	APPROVED

DESIGNED & ENGINEERED BY: LANTDIV NAVAL FACILITIES ENGINEERING COMMAND

APPROVED
ACTIVITY – SATISFACTORY TO
DATE
APPROVED
FOR CDR FOR COMMANDER NAVFAC
DATE

A/E	
DESIGN	MBS
DRAWN	MBS
REVIEW	DGB
CHIEF ARCH./ENGR.	DWB
PROJECT MANAGER	KJT
FIRE PROTECTION	DGB
BRANCH MANAGER	
DESIGN DIRECTOR	

DEPARTMENT OF THE NAVY — NAVAL STATION
ATLANTIC DIVISION — NAVAL FACILITIES ENGINEERING COMMAND
NORFOLK, VIRGINIA

NAVAL STATION NORFOLK, VIRGINIA
PIER 3 REPLACEMENT
BORINGS 16 AND 17

CODE ID. NO. 80091 | SIZE D
SCALE: NONE
STD. NO.
STA. PROJ. NO. P-226
SPEC. NO. 05-99-9111
CONTR. CONTR. NO. N62470-99-B-9111
NAVFAC DRAWING NO. 4439624
SHEET 73 OF 236
B-6

FILENAME: SP911186.DWG, PLOT SCALE: 1" = 1', SAVED ON 06/11/01 AT 10:58, XREFS: NONE

BORING NO.18

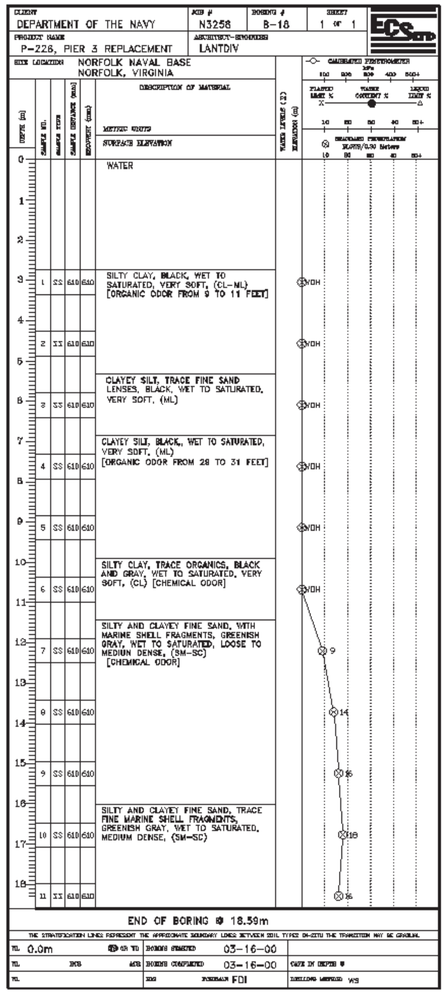

BORING NO.19

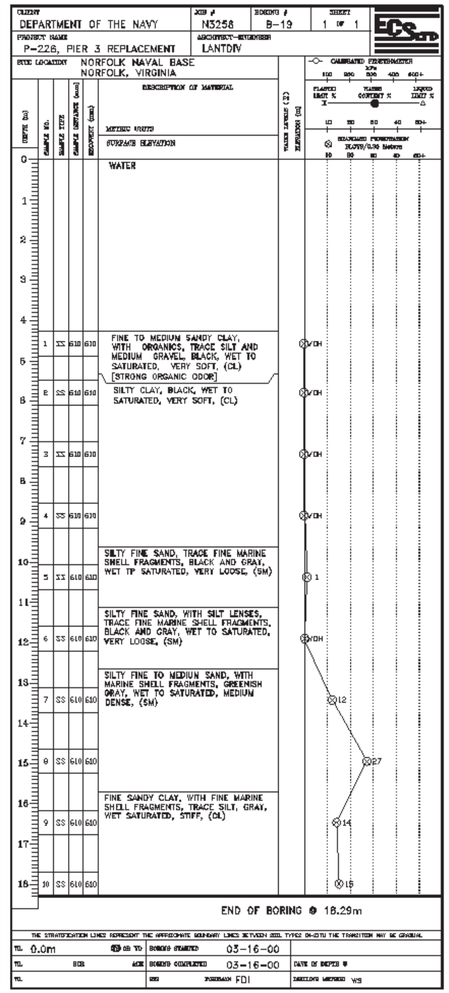

SOIL BORING GENERAL NOTES

1. BORINGS WERE ADVANCED USING HOLLOW STEM AUGER AND MUD ROTARY DRILLING TECHNIQUES.
2. COLUMN INDICATES DEPTH OF SAMPLE AND STANDARD PENETRATION TEST DATA.
   A. STANDARD PENETRATION TEST (ASTM D-1586) – DRIVING A 51 MM O.D., 35 MM I.D., SAMPLER A DISTANCE OF 300 MM INTO UNDISTURBED SOIL WITH A 63.6 KG HAMMER FREE FALLING A DISTANCE OF 762 MM 'WOH' INDICATES WEIGHT OF HAMMER ADVANCED SAMPLER 300 MM.
3. IN THE COLUMN "DESCRIPTION OF MATERIAL" THE HORIZONTAL LINE INDICATES STRATA CHANGES. A SOLID LINE REPRESENTS AN ACTUALLY OBSERVED CHANGE. A DASHED LINE REPRESENTS AN ESTIMATED CHANGE.
4. ALL DEPTHS AND LOCATIONS ARE APPROXIMATE. BORING DEPTHS AND WATER OBSERVATIONS ARE REFERENCED TO THE WATER SURFACE EXISTING AT TIME OF BORING. FOR BORING LOCATIONS SEE SHEET CIVIL SHEETS.
5. BORINGS DRILLED BY ENGINEERING CONSULTING SERVICES, LTD.
6. THE SOIL CLASSIFICATION INDICATED (SP, ML, CL, ETC.) ARE FROM THE UNIFIED SOIL CLASSIFICATION SYSTEM (USCS). DESCRIPTION OF SOIL AND CLASSIFICATION IN ACCORDANCE WITH USCS IS BASED ON VISUAL EXAMINATION SUPPLEMENTED BY LABORATORY TESTS.
7. THE NATURAL MOISTURE CONTENT AND ATTERBERG LIMITS OF SOIL SAMPLES WAS DETERMINED IN ACCORDANCE WITH ASTM D-2216 AND 4318, RESPECTIVELY.
8. BORINGS ARE NOT SHOWN TO SCALE.
9. FOR SOIL SAMPLES CONSISTING OF TWO OR MORE TYPES, RELATIVE PROPORTIONS OF SECONDARY COMPONENTS (PERCENT BY WEIGHT) ARE INDICATED AS FOLLOWS:

DESCRIPTIVE TERM	PERCENT
TRACE	1–10
LITTLE	11–20
SOME	21–35
AND	36–50

10. WATER LEVEL OBSERVATIONS WERE MADE AT THE TIME OF THE SUBSURFACE INVESTIGATIONS AND DO NOT NECESSARILY REPRESENT GROUNDWATER ELEVATIONS AT THE TIME OF CONSTRUCTION. GROUNDWATER LEVELS MAY FLUCTUATE WITH SEASONAL CHANGE, TEMPERATURE VARIATION, RAINFALL, AND TIDAL INFLUENCES AND THEREFORE SHOULD NOT BE CONSTRUED AS ABSOLUTE. BORINGS PERFORMED OVER WATER MADE FROM BARGE OR PIER DECK. WATER DEPTHS FOR THESE BORINGS WILL FLUCTUATE WITH THE TIDE AND SHOULD NOT BE CONSEDERED ABSOLUTE. SEE CIVIL SHEETS FOR SOUNDINGS FOR INFORMATION CONCERNING MUDLINE ELEVATIONS.

LABORATORY TEST SUMMARY

BORING NUMBER	SAMPLE NUMBER	DEPTH (METERS)	NATURAL MOISTURE (%)	PERCENT PASSING # 200 SIEVE	WET DENSITY (pcf)	DRY DENSITY (pcf)	Qu KPa(tsf)	ATTERBERG LIMITS	USCS SYMBOL
B-1	S-3	6.1-6.7	36.7	29.2	113.2	80.7	44 (0.46)	33/28/5	SM
B-2	S-3	5.5-6.1	43.1	28.9	–	–	–	45/34/11	SC
B-2	S-4	7-7.5	39.6	27.3	–	–	–	NP	SM
B-2	S-6	10.1-10.7	39.7	29.6	–	–	–	NP	SM
B-2	S-8	12.2-12.8	34.4	27.4	118.0	84.1	335 (*3.5)	NP	SM
B-2	S-10	16.2-16.8	40.3	28.6	–	–	–	NP	SM
B-2	S-17	26.8-27.4	24.9	19.2	–	–	–	NP	SM
B-2	S-19	29.9-30.5	28.3	34.5	–	–	–	31/24/7	SC
B-3	S-13	21.4-22.0	26.9	21.8	125.4	99.4	345 (*3.6)	NP	SM

NOTE:
"Qu" INDICATES UNCONFINED COMPRESSIVE STRENGTH OF RELATIVELY UNDISTURBED SAMPLE AT DEPTH INDICATED.
'*' INDICATES TEST PERFORMED USING HAND PENETROMETER.

REVISIONS
SYM. | DESCRIPTION | DATE | APPROVED

DESIGNED & ENGINEERED BY: LANTDIV NAVAL FACILITIES ENGINEERING COMMAND

APPROVED
ACTIVITY – SATISFACTORY TO
DATE
APPROVED
FOR CEO FOR COMMANDER NAVFAC
7/27/01
DATE
A/E
DESIGN MBS
DRAWN MBS
REVIEW DGB
CHIEF ARCH./ENGR.
PROJECT MANAGER DWB
FIRE PROTECTION KH
BRANCH MANAGER DGB
DESIGN DIRECTOR

DEPARTMENT OF THE NAVY
NAVAL STATION
ATLANTIC DIVISION
NAVAL FACILITIES ENGINEERING COMMAND
NORFOLK, VIRGINIA
NAVAL STATION NORFOLK, VIRGINIA
RIER 3 REPLACEMENT
BORINGS 18 AND 19 AND NOTES

CODE ID. NO. 80091 SIZE D
SCALE: NONE
EFD NO.
STA. PROJ. NO. P-226
SPEC. NO. 05-99-9111
CONTR. CONTR. NO. N62470-99-B-9111
NAVFAC DRAWING NO. 4439625
SHEET 74 OF 236
B-7

FILENAME: SP911187.DWG, PLOT SCALE: 1" = 1', SAVED ON 07/03/01 AT 08:43, XREFS: NONE

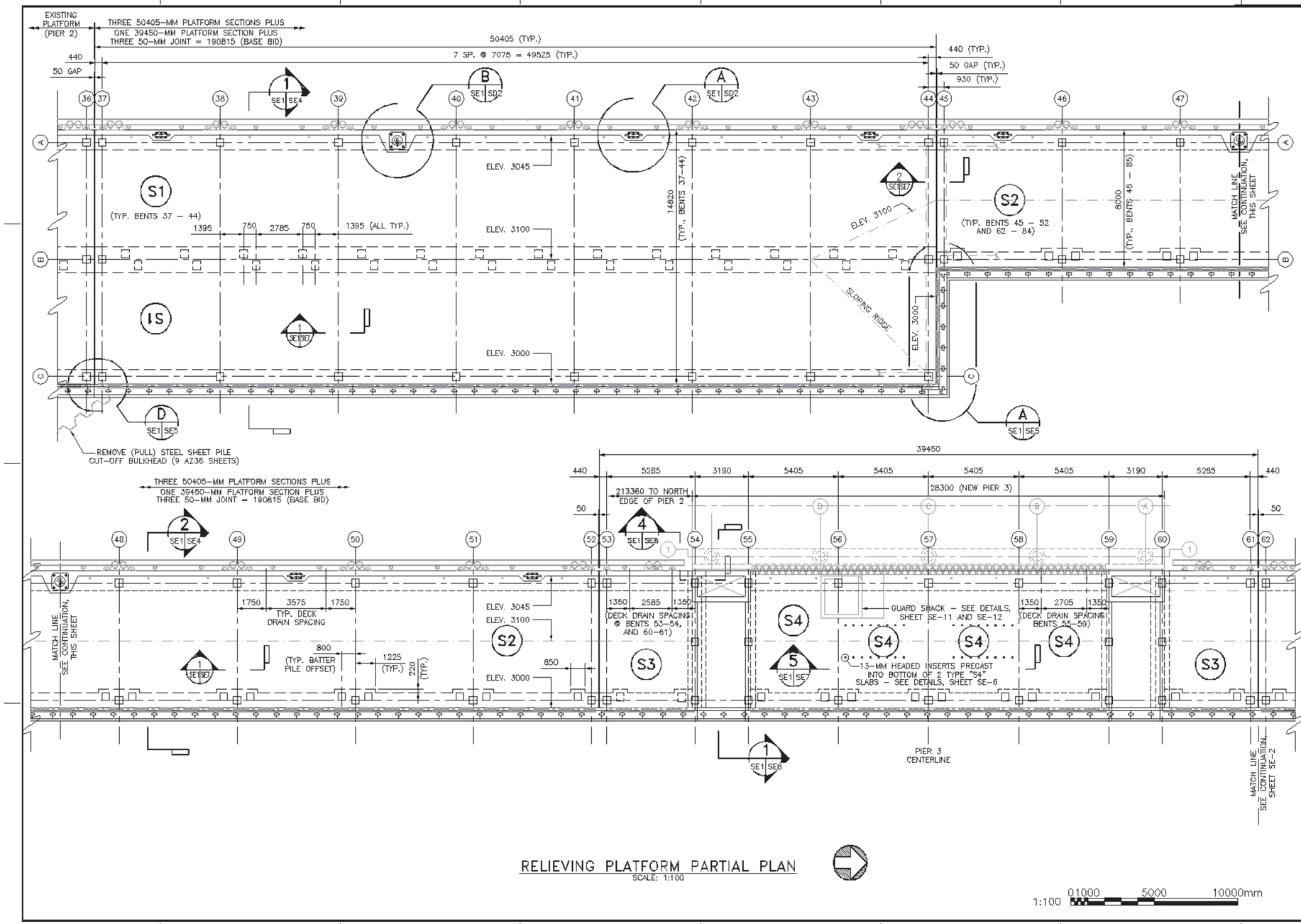

RELIEVING PLATFORM PARTIAL PLAN

SCALE: 1:100

1:100 01000 5000 10000mm

REVISIONS

DESCRIPTION	DATE	APPROVED

DESIGNED & ENGINEERED BY LANTDIV NAVAL FACILITIES ENGINEERING COMMAND

APPROVED
ACTIVITY – SATISFACTORY TO
DATE
APPROVED
FOR EFD FOR COMMANDER NAVFAC
7/27/01
DATE

A/E	EFD
DESIGN	HK
DRAWN	HK
REVIEW	BJD
SD	
CHIEF ARCH./ENGR.	
PROJECT MANAGER	DWB
FIRE PROTECTION	CJT
BRANCH MANAGER	
DESIGN DIRECTOR	

DEPARTMENT OF THE NAVY
NAVAL STATION
ATLANTIC DIVISION
NAVAL FACILITIES ENGINEERING COMMAND
NORFOLK, VIRGINIA

NAVAL STATION NORFOLK, VA

PIER 3 REPLACEMENT

RELIEVING PLATFORM – PARTIAL PLAN

CODE ID. NO. 80091 SIZE D
SCALE: 1:100
EFD NO.
STA. PROJ. NO. P-226
SPEC. NO. 05-99-9111
CONTR. CONTR. NO. N62470-99-B-9111
NAVFAC DRAWING NO. 4439695
SHEET 144 OF 236

SE-1

FILENAME: 91115E01.DWG, PLOT SCALE: 1=1, SAVED ON 08/31/01 AT 14:48, XREFS: NONE

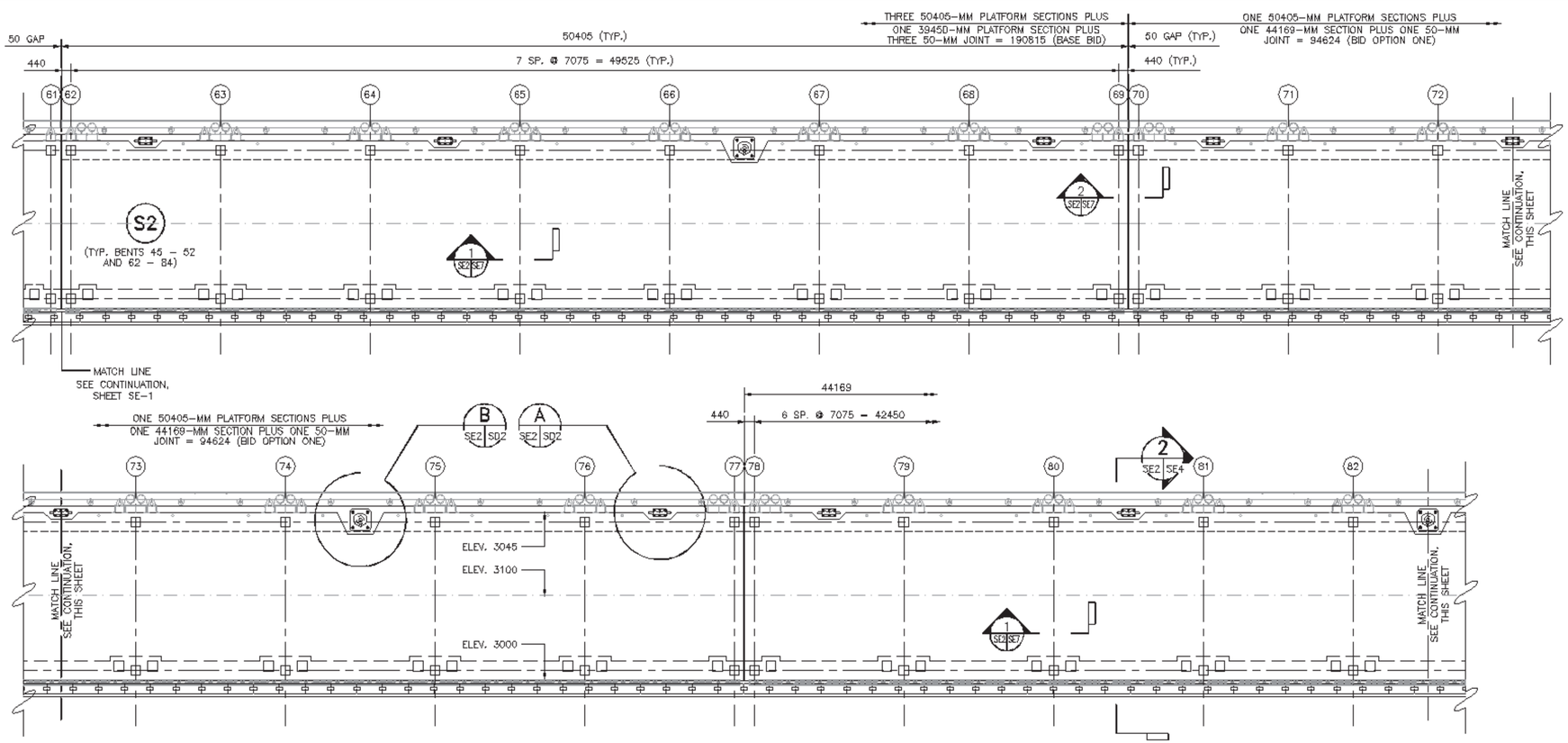

RELIEVING PLATFORM PARTIAL PLAN

SCALE: 1:100

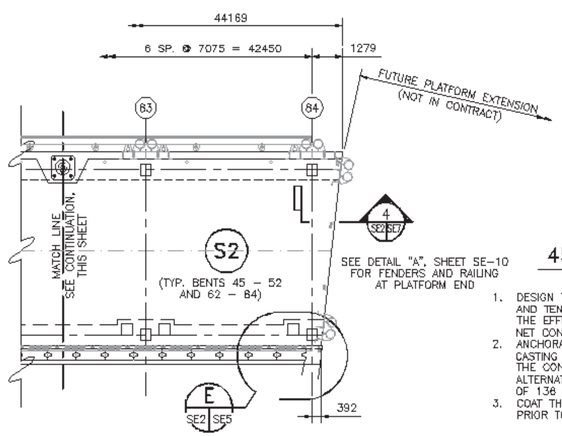

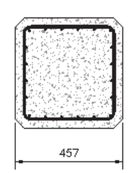

457-MM SQUARE PILE

SCALE: 1:10

1. DESIGN THE 457-MM SQUARE PILES FOR A COMPRESSIVE AND TENSILE AXIAL LOAD OF 136 METRIC TONS. DESIGN THE EFFECTIVE PRESTRESS (AFTER LOSSES) TO PREVENT NET CONCRETE TENSION AT FULL TENSILE PILE LOADING.
2. ANCHORAGE IS ACHIEVED BY EXPOSING, SPLAYING, AND CASTING THE PILE PRESTRESSING STRAND INTO CONCRETE CAPS. THE CONTRACTOR MAY, AT HIS OPTION, SUBMIT FOR APPROVAL ALTERNATIVE MEANS FOR ACHIEVING A LIVE LOAD ANCHORAGE OF 136 METRIC TONS.
3. COAT THE TOP 7500 MM OF ALL PILES WITH COAL TAR EPOXY PRIOR TO DRIVING.

RELIEVING PLATFORM STRUCTURAL NOTES

DESIGN LIVE LOADS
- VERTICAL
  - UNIFORM – 14.36 KPa (300 PSF)
  - TRUCK – HS20-44
  - MOBILE CRANE OUTRIGGER
    - OUTRIGGER ON SLAB – 334,000 N (75,000 LBS.)
    - OUTRIGGER ON BEAMS – 668,000 N (150000 LBS.)
- HORIZONTAL
  - DECK FITTINGS
    - BOLLARDS – 463,000 N (104,000 LBS.)
    - 610-MM (42-IN) CLEATS – 89,000 N (20,000 LBS.)
  - LATERAL EARTH PRESSURES
    - CONCRETE SHEET PILE BULKHEAD
      - FIXED EARTH REACTION – 85,000 N/M (5,800 LBS. / FT.)
      - FREE EARTH REACTION – 96,000 N/M (6,600 LBS. / FT.)
    - AZ 48 STEEL SHEET PILE BULKHEAD (BID OPTION 2)
      - FIXED EARTH REACTION – 190,000 N/M (13,000 LBS. / FT.)
      - FREE EARTH REACTION – 225,000 N/M (15,400 LBS. / FT.)
- PILE BEARING CAPACITY – 136 MT (150 TONS) (COMPRESSION)
  - EST. BID LENGTH =
    - 20.3 M (VERTICAL), 21.5 M (BATTER) BENTS 37 – 51 (BASE BID)
    - 24.3 M (VERTICAL), 25.7 M (BATTER) BENTS 52 – 69 (BASE BID)
    - 21.6 M (VERTICAL), 22.7 M (BATTER) BENTS 70 – 84 (BID OPTION 1)
    - 30.4 M (VERTICAL), 32.0 M (BATTER) BENTS D – K (BID OPTION 2)

1. SEE SHEET S-1 FOR MATERIAL AND GENERAL NOTES
2. PROVIDE A 40-MM CHAMFER ON ALL OUTSIDE CONCRETE CORNERS.
3. PROVIDE 75-MM COVER FOR ALL RELIEVING PLATFORM REINFORCING.
4. USE ASTM A572, GRADE 50 STEEL FOR FENDER SYSTEM CHOCKS.
5. PROVIDE AND INSTALL TRENCH DRAINS OF THE MAXIMUM CONTINUOUS LENGTHS POSSIBLE BETWEEN PLATFORM JOINTS, IN MULTIPLES OF THE NOMINAL 610-MM GRATING LENGTH AS FOLLOWS:

BENTS 37 – 44	50020	(BASE BID)
BENTS 44 – 45	6820	(BASE BID) (*)
BENTS 45 – 52	50020	(BASE BID)
BENTS 53 – 54	5490	(BASE BID)
BENTS 55 – 59	21350	(BASE BID)
BENTS 60 – 61	5490	(BASE BID)
BENTS 62 – 69	50020	(BASE BID)
BENTS 70 – 77	50020	(BID OPTION #1)
BENTS 78 – 84	42700	(BID OPTION #1)
BENTS D – K	49410	(BID OPTION #2)

(*) – REQUIRES NON-STANDARD GRATING LENGTH

1:100 01000 5000 10000mm

REVISIONS

DESCRIPTION	DATE	APPROVED

DESIGNED & ENGINEERED BY: LANTDIV NAVAL FACILITIES ENGINEERING COMMAND

APPROVED
ACTIVITY – SATISFACTORY TO
DATE
APPROVED
FOR CFD FOR COMMANDER NAVFAC
9/27/01
DATE

A/E	CFD
DESIGN	HK
DRAWN	HK
REVIEW	BJD
QC	
CHIEF ARCH / ENGR.	
PROJECT MANAGER	DWB
FIRE PROTECTION	KJT
BRANCH MANAGER	
DESIGN DIRECTOR	

DEPARTMENT OF THE NAVY
NAVAL STATION
ATLANTIC DIVISION
NAVAL FACILITIES ENGINEERING COMMAND
NORFOLK, VIRGINIA
NAVAL STATION NORFOLK, VA.
PIER 3 REPLACEMENT
RELIEVING PLATFORM – PARTIAL PLAN

CODE ID. NO. 80091 | SIZE D
SCALE: NOTED
CFD NO.
STA. PROJ. NO. P-226
SPEC. NO. 05-99-9111
CONTR. CONTR. NO.
N62470-99-B-9111
NAVFAC DRAWING NO.
4439696
SHEET 146 OF 236
SE-2

FILENAME: 91115E02.DWG, PLOT SCALE: 1=1, SAVED ON 09/06/01 AT 15:08, XREFS: 91115ED1.DWG

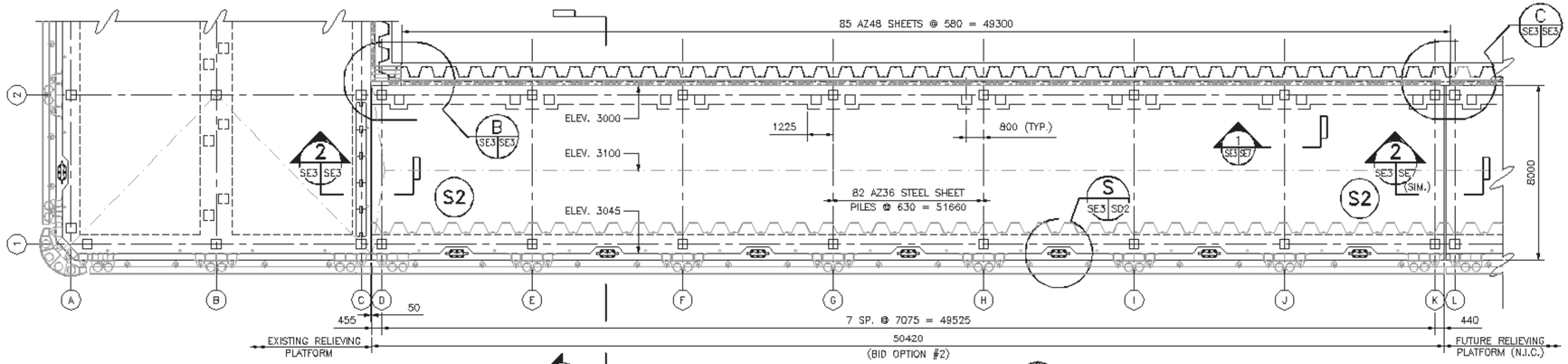

RELIEVING PLATFORM PARTIAL PLAN

SCALE: 1:100

SEE DETAIL "A", SHEET SE-10, FOR RAILING AND FENDERS AT PLATFORM END

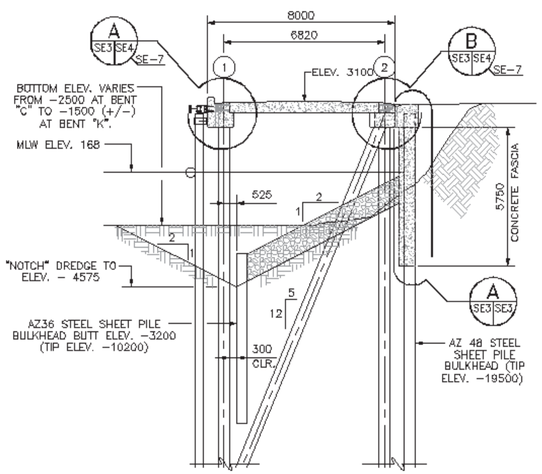

REMOVE RIP RAP AND CONCRETE RUBBLE (UP TO 2-METER IN DIA.) AS REQUIRED TO INSTALL NEW SHEET PILE BULKHEAD AND RELIEVING PLATFORM PILES. ANTICIPATE PRE-EXCAVATION TO A DEPTH OF -8000 TO REMOVE OBSTRUCTIONS.

SECTION 1
SCALE: 1:100 C-12

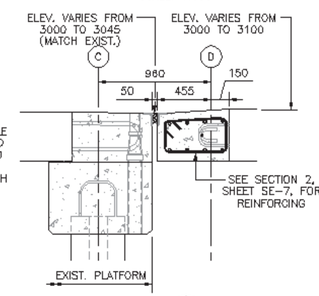

SECTION 2
SCALE: 1:20

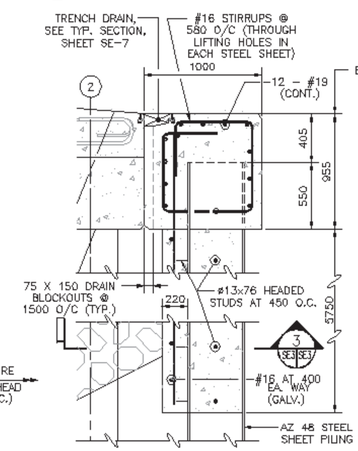

STEEL BULKHEAD CAP DETAIL
SCALE: 1:20

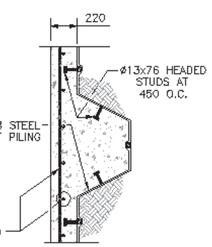

SECTION 3
SCALE: 1:20

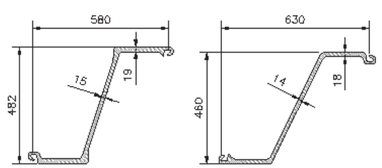

4800 CM**3 / M - SECTION MODULUS - 3600 CM**3 / M
115670 CM**4 / M - MOMENT OF INERTIA - 82800 CM**4 / M

AZ 48 AZ 36

STEEL SHEET PILE SECTION PROPERTIES
SCALE: 1:10

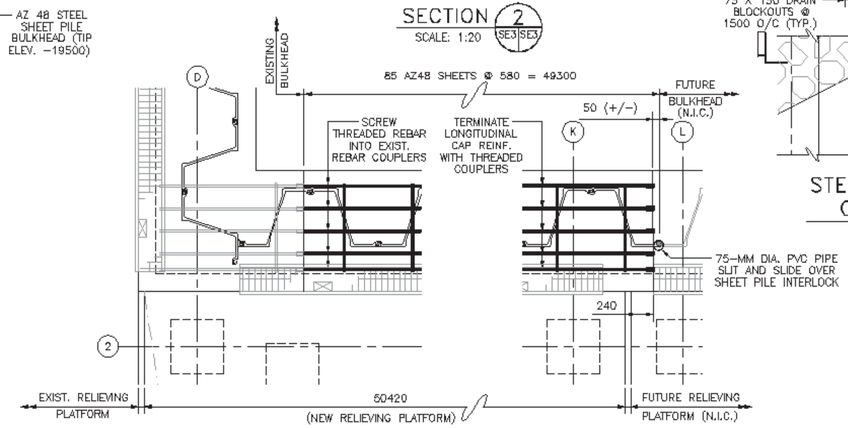

EXIST. / NEW BULKHEAD JUNCTURE DETAIL
SCALE: 1:20

EAST END OF NEW BULKHEAD TERMINATION DETAIL
SCALE: 1:20

NOTE: CONSTRUCTION OF THE RELIEVING PLATFORM BETWEEN BENTS "D" AND "K" DEPICTED ON THIS SHEET CONSTITUTES BID OPTION #2.

GRAPHIC SCALES

1:10 0 100 500 1000mm
1:20 0 500 1000 2000mm
1:100 0 1000 5000 10000mm

REVISIONS

DESCRIPTION	DATE	APPROVED

DESIGNED & ENGINEERED BY LANTDIV NAVAL FACILITIES ENGINEERING COMMAND

APPROVED
ACTIVITY - SATISFACTORY TO
DATE
APPROVED
FOR EFD FOR COMMANDER NAVFAC 7/27/01
DATE

A/E	EFD
DESIGN	HK
DRAWN	HK
REVIEW	BJD
SD	
CHIEF ARCH./ ENGR.	
PROJECT MANAGER	DWB
FIRE PROTECTION	KJT
BRANCH MANAGER	
DESIGN DIRECTOR	

DEPARTMENT OF THE NAVY — NAVAL FACILITIES ENGINEERING COMMAND
ATLANTIC DIVISION — NORFOLK, VIRGINIA
NAVAL STATION — NORFOLK, VA

PIER 3 REPLACEMENT

E - W RELIEVING PLATFORM - PARTIAL PLAN

CODE ID. NO. 80091 SIZE D
SCALE: NOTED
EFD NO.
STA. PROJ. NO. P-226
SPEC. NO. 05-99-9111
CONTR. CONTR. NO. N62470-99-B-9111
NAVFAC DRAWING NO. 4439697
SHEET 146 OF 236

SE-3

FILENAME: REV-SE03.DWG, PLOT SCALE: 1=1, SAVED ON 08/06/01 AT 15:23, XREFS: 91115E01.DWG

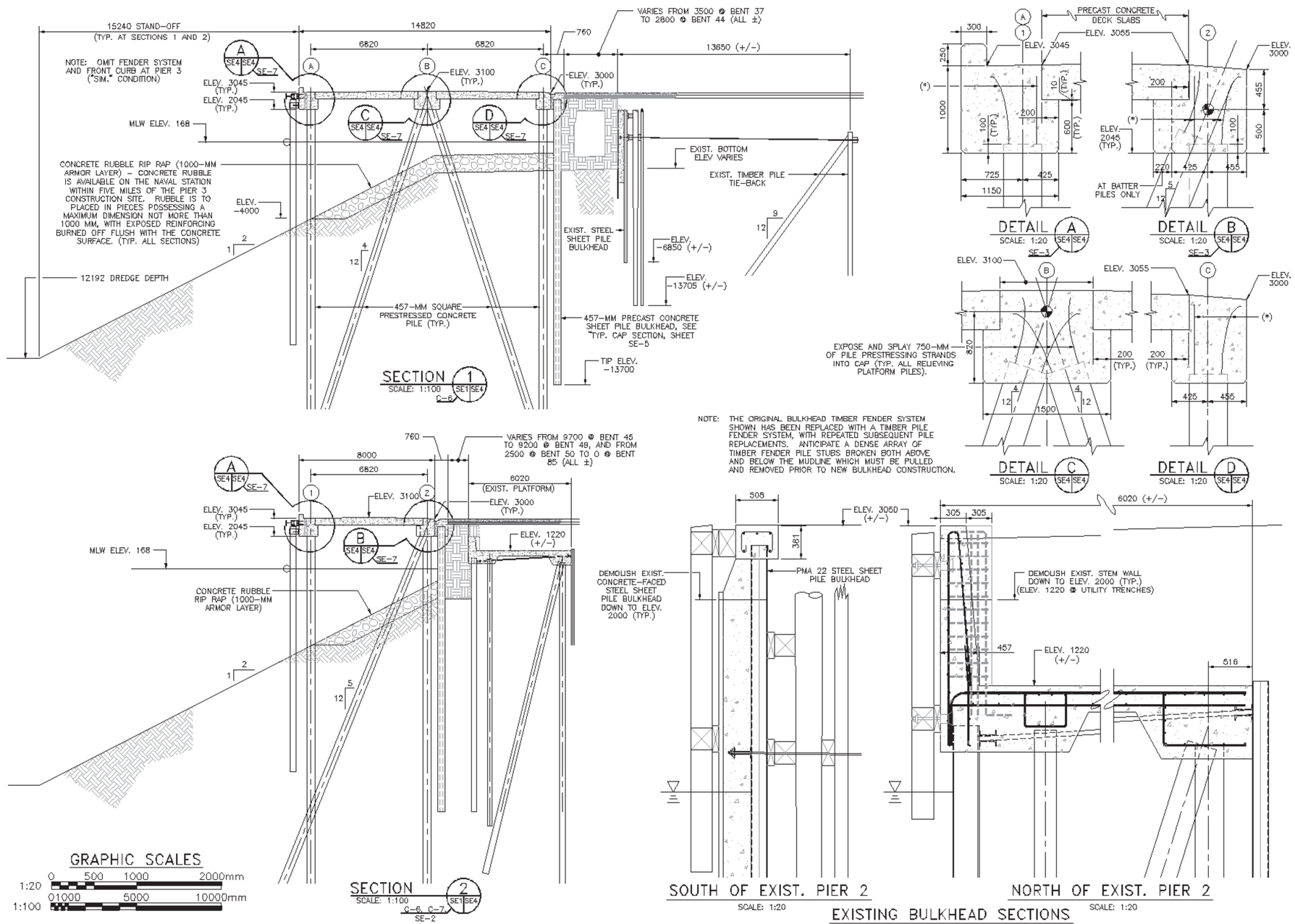

REVISIONS

SYM.	DESCRIPTION	DATE	APPROVED

DESIGNED & ENGINEERED BY LANTDIV NAVAL FACILITIES ENGINEERING COMMAND

APPROVED
ACTIVITY - SATISFACTORY TO
DATE
APPROVED
FOR EFD FOR COMMANDER NAVFAC
7/27/01
DATE

A/E	EFD
DESIGN	HK
DRAWN	HK
REVIEW	BJD
SP	
CHIEF ARCH./ ENGR.	
PROJECT MANAGER	DWB
FIRE PROTECTION	KIT
BRANCH MANAGER	VASTAR
DESIGN DIRECTOR	JARDY

DEPARTMENT OF THE NAVY
NAVAL FACILITIES ENGINEERING COMMAND
ATLANTIC DIVISION
NORFOLK, VIRGINIA
NAVAL STATION
NORFOLK, VA

PIER 3 REPLACEMENT

TYPICAL RELIEVING PLATFORM SECTIONS

CODE ID. NO. 80091 SIZE D
SCALE: NOTED
EFD NO.
STA. ASSIL NO. P-226
SPEC. NO. 05-99-9111
CONTR. CONTA NO. N62470-99-B-9111
NAVFAC DRAWING NO. 4439698
SHEET 147 OF 236

SE-4

FILENAME: 9111SE04.DWG, PLOT SCALE: 1=1, SAVED ON 08/23/01 AT 15:55, XREFS: NONE

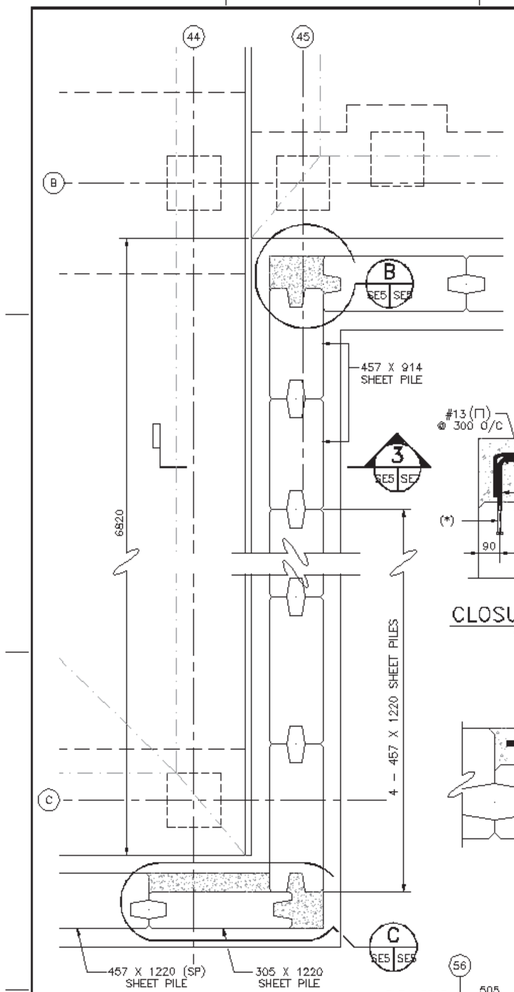

BULKHEAD CORNER PLAN DETAIL (A)
SCALE: 1:20 (SE1 | SE5)

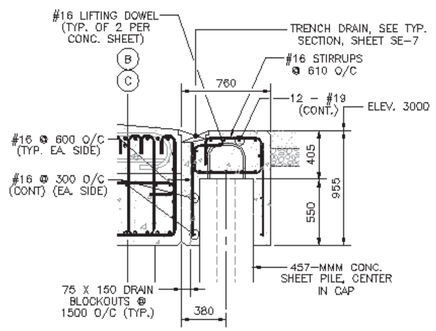

TYP. CAP SECTION
SCALE: 1:20

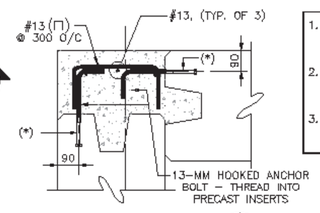

CLOSURE DETAIL (B)
SCALE: 1:10 (SE5 | SE5)

1. GALVANIZE ALL REINFORCING USED IN BULKHEAD CLOSURE WALLS.
2. TREMIE ALL CAST-IN-PLACE BULKHEAD CLOSURE WALLS TO ELEV. -2000.
3. DOWEL ALL VERTICAL CLOSURE REINFORCING INTO THE BULKHEAD CAP.

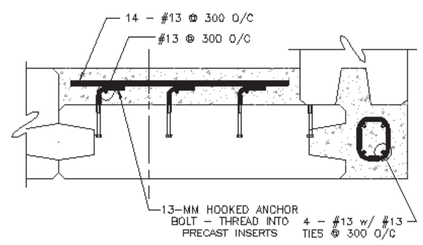

CLOSURE DETAIL (C)
SCALE: 1:10 (SE5 | SE5)

CONCRETE SHEET PILE NOTES:

1. CONCRETE SHALL HAVE A MINIMUM COMPRESSIVE STRENGTH OF 42 MPa AT 28 DAYS.
2. SHEET SECTIONS SHALL HAVE THE FOLLOWING PROPERTY VALUES PER METER OF WALL WIDTH:

FOR 457-MM SHEETS,	FOR 305-MM SHEETS,
W = 1220 mm	W = 1220 mm
A = 4572 cm2	A = 1200 cm2
I = 796411 cm4	I = 235973 cm4
S = 34839 cm3	S = 15484 cm3
ALL. MOM. = 288.2 kN-m	ALL. MOM. = 128.1 kN-m

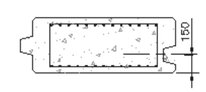

457 X 1220 (SP)
(1 REQ'D.)

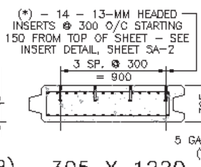

305 X 1220
(1 REQ'D.)

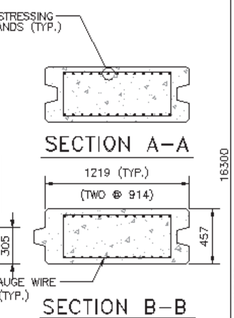

SECTION A–A

SECTION B–B

PRECAST CONCRETE SHEET PILE DETAILS
NOT TO SCALE

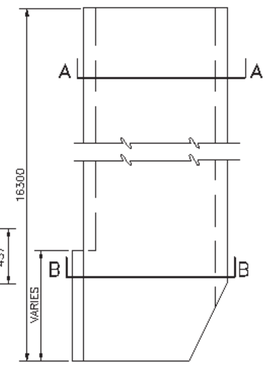

ELEVATION

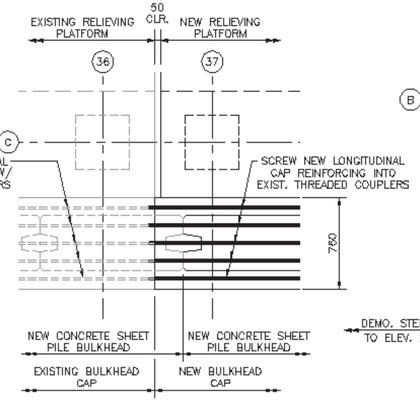

EXIST. / NEW BULKHEAD JUNCTURE DETAIL (D)
SCALE: 1:20 (SE1 | SE5)

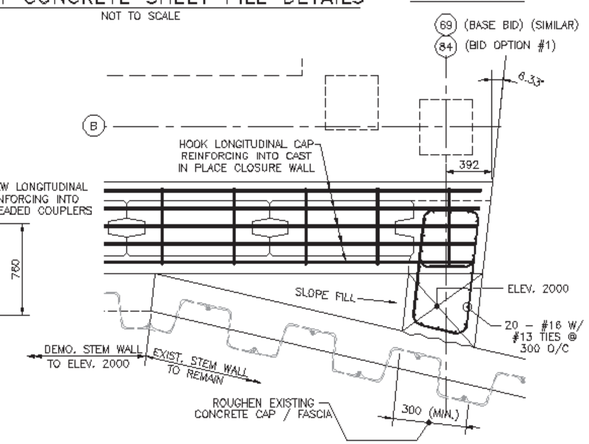

NORTH END OF NEW BULKHEAD CLOSURE DETAIL (E)
SCALE: 1:20 (SE2 | SE5)

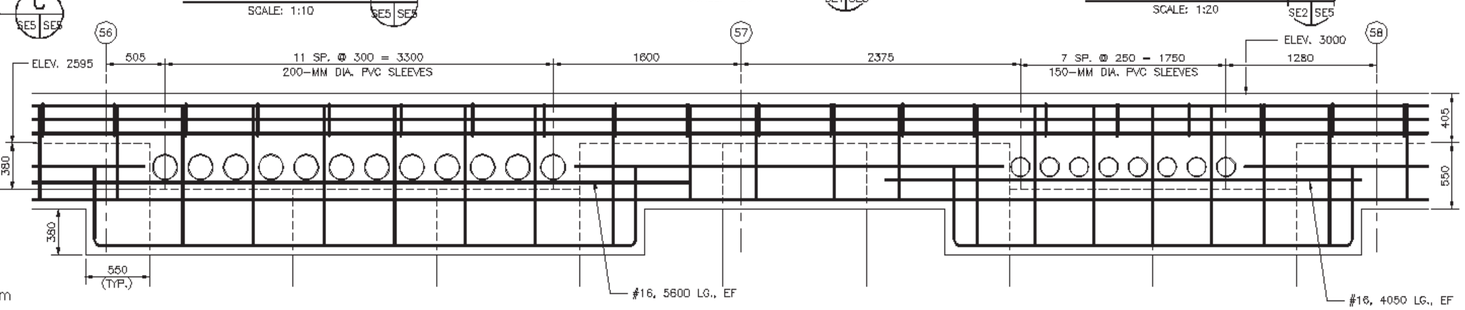

REAR BULKHEAD ELEVATION AT ELECTRICAL / COMMUNICATIONS CONDUITS
SCALE: 1:20

NOTE: SEE SECTION 2, SHEET SE-8, FOR BULKHEAD ELEVATION AT UTILITY TRENCHES

GRAPHIC SCALES

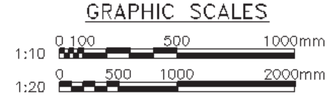

REVISIONS			
SYM.	DESCRIPTION	DATE	REVISED BY

DESIGNED & ENGINEERED BY LANTDIV NAVAL FACILITIES ENGINEERING COMMAND

APPROVED
ACTIVITY – SATISFACTORY TO
DATE
APPROVED
FOR EFD FOR COMMANDER NAVFAC
9/27/01
DATE

A/E	EFD
DESIGN	HK
DRAWN	HK
REVIEW	BJD
EO	
CHIEF ARCH./ENGR.	
PROJECT MANAGER	DWB
FIRE PROTECTION	KJT
BRANCH MANAGER	
DESIGN DIRECTOR	

DEPARTMENT OF THE NAVY — NAVAL FACILITIES ENGINEERING COMMAND
ATLANTIC DIVISION — NORFOLK, VIRGINIA
NAVAL STATION — NAVAL STATION NORFOLK, VA
PIER 3 REPLACEMENT
RELIEVING PLATFORM BULKHEAD DETAILS

CODE ID. NO. 80091 | SIZE D
SCALE: NOTED
EFD NO.
STA. FACIL. NO. P-226
SPEC. NO. 05-99-9111
CONTR. CONTS. NO. N62470-99-B-9111
NAVFAC DRAWING NO. 4439699
SHEET 148 OF 236
SE-5

FILENAME: 9111SE05.DWG, PLOT SCALE: 1=1, SAVED ON 08/23/01 AT 16:26, XREFS: 9111SE01.DWG

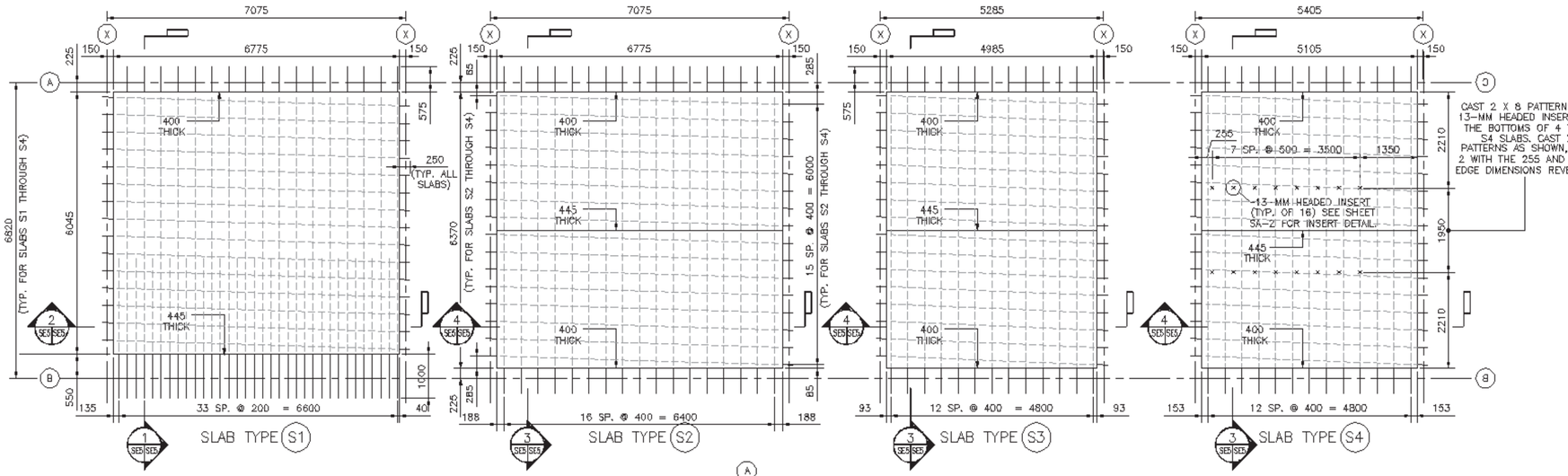

RELIEVING PLATFORM PRECAST CONCRETE SLAB PLAN DETAILS

SCALE: 1:50

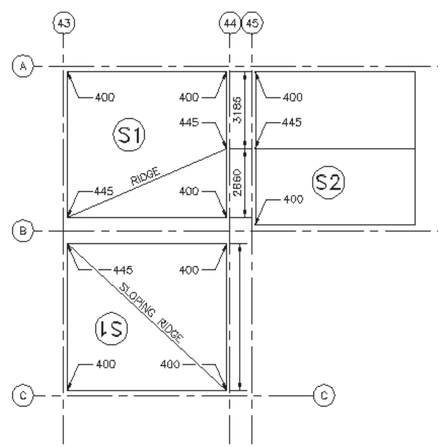

PLAN DETAIL – SPECIAL TYPE (S1) SLABS

SCALE: 1:100

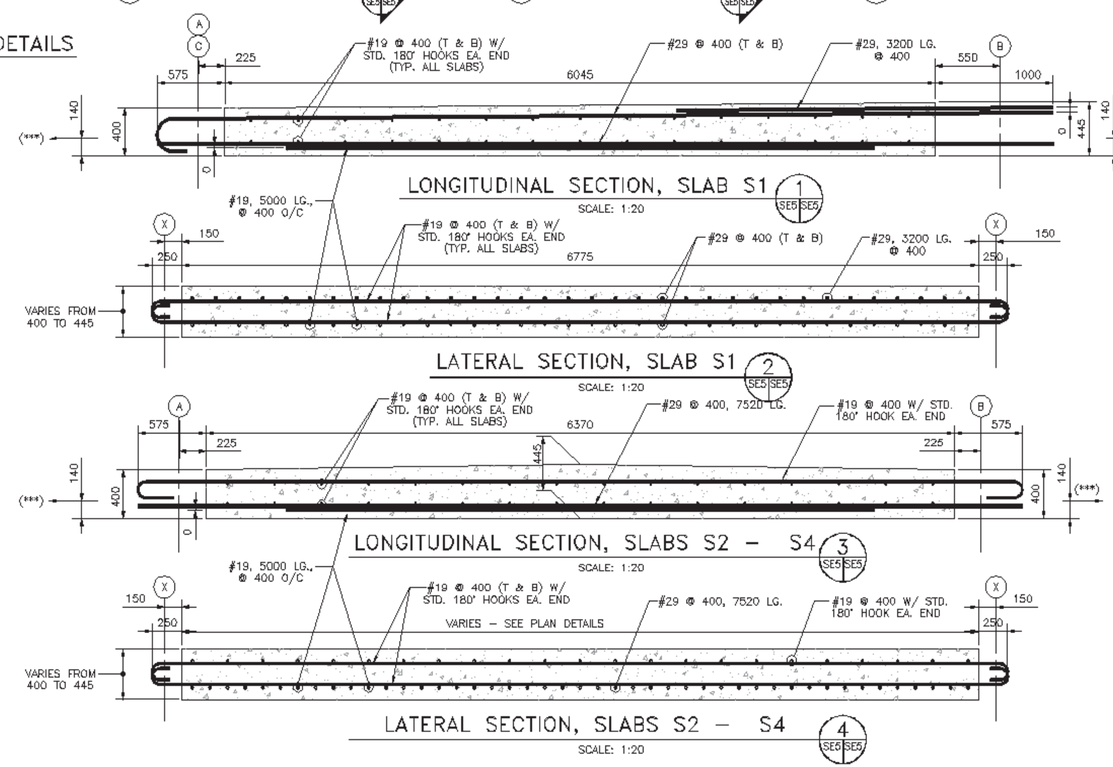

(***) – APPLY AN ECCENTRIC LONGITUDINAL PRESTRESS OF 340 KN/M (23,300 LB/FT) (NET, AFTER LOSSES), ACROSS THE WIDTH OF ALL PRECAST SLABS. ARRANGE PRESTRESSING STRANDS IN A SINGLE LAYER, 140-MM ABOVE THE BOTTOM OF ALL PRECAST SLABS.

GRAPHIC SCALES

1:20 — 0, 500, 1000, 2000mm

1:50 — 0, 1000, 3000, 5000mm

1:100 — 0, 1, 5, 10m

REVISIONS

SYM.	DESCRIPTION	DATE	APPROVED

DESIGNED & ENGINEERED BY LANTDIV NAVAL FACILITIES ENGINEERING COMMAND

APPROVED: ACTIVITY – SATISFACTORY TO

DATE

APPROVED: FOR EFD FOR COMMANDER NAVFAC 9/27/01

DATE

A/E — EFD: DESIGN HDK; DRAWN HDK; REVIEW BJD; SP; CHIEF ARCH./ENGR.; PROJECT MANAGER DWB; FIRE PROTECTION; BRANCH MANAGER; DESIGN DIRECTOR

DEPARTMENT OF THE NAVY — NAVAL FACILITIES ENGINEERING COMMAND — ATLANTIC DIVISION — NORFOLK, VIRGINIA

NAVAL STATION — NAVAL STATION NORFOLK, VA

PIER 3 REPLACEMENT

RELIEVING PLATFORM PRECAST SLAB DETAILS

CODE ID. NO. 80091 | SIZE D

SCALE: NOTED

EFD NO.

STA. PROJ. NO. P-226

SPEC. NO. 05-99-9111

CONTR. CONTR. NO. N62470-99-B-9111

NAVFAC DRAWING NO. 4439700

SHEET 149 OF 236

SE-6

FILENAME: 9111SE06.DWG, PLOT SCALE: 1=1, SAVED ON 07/02/01 AT 15:48, XREFS: NONE

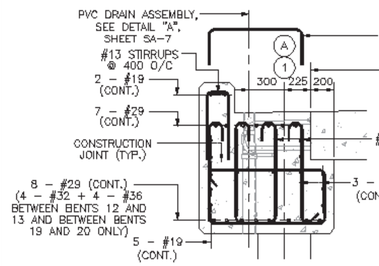

REINFORCING DETAIL A (SE4 SE7)
SCALE: 1:20

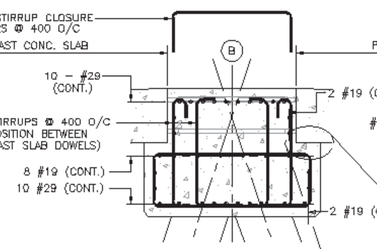

REINFORCING DETAIL B (SE4 SE7)
SCALE: 1:20

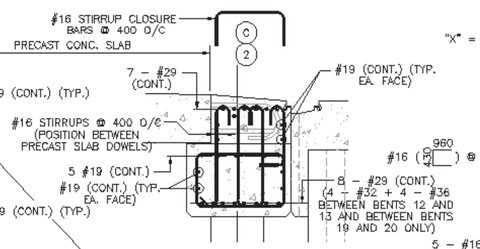

REINFORCING DETAIL C (SE4 SE7)
SCALE: 1:20

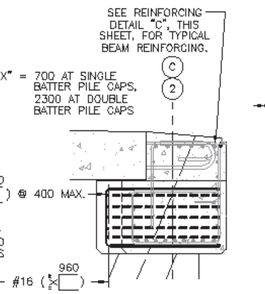

REINFORCING DETAIL D (SE4 SE7)
SCALE: 1:20

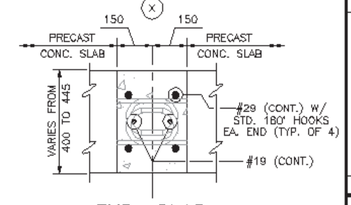

TYP. SLAB JOINT SECTION 1 (SE1 SE7)
SCALE: 1:10
SE2, SE3

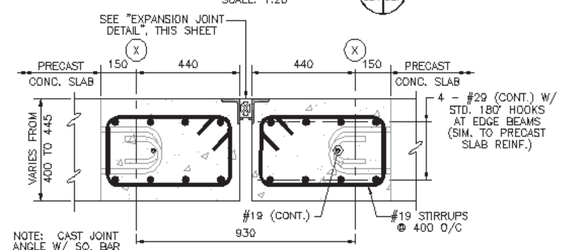

SECTION 2 (SE1 SE7)
SCALE: 1:10
SE-2, SE-3

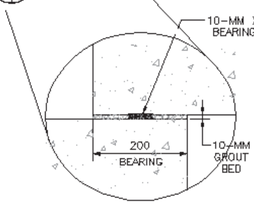

PRECAST SLAB BEARING DETAIL
NOT TO SCALE

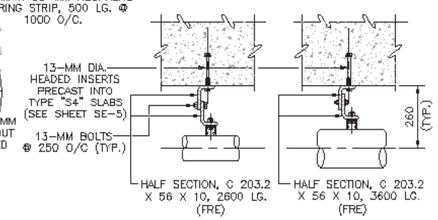

UNDER TYPE "S3" SLABS

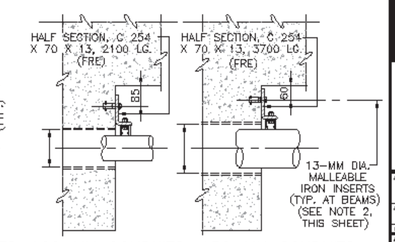

AT BEAMS

RELIEVING PLATFORM CONDUIT SUPPORT DETAILS
SCALE: 1:10

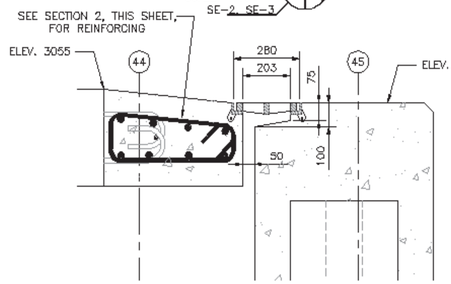

SECTION 3 (SE5 SE7)
SCALE: 1:10

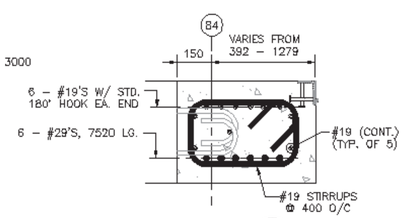

SECTION 4 (SE2 SE7)
SCALE: 1:10
SE-10

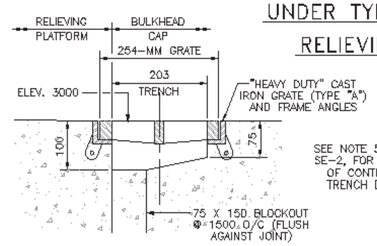

SEE NOTE 5., SHEET SE-2, FOR LENGTHS OF CONTINUOUS TRENCH DRAINS.

TYP. SECTION - CONT. TRENCH DRAIN
SCALE: 1:5

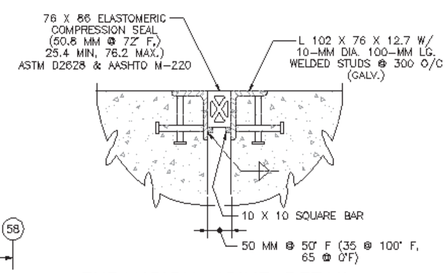

EXPANSION JOINT DETAIL
SCALE: 1:5

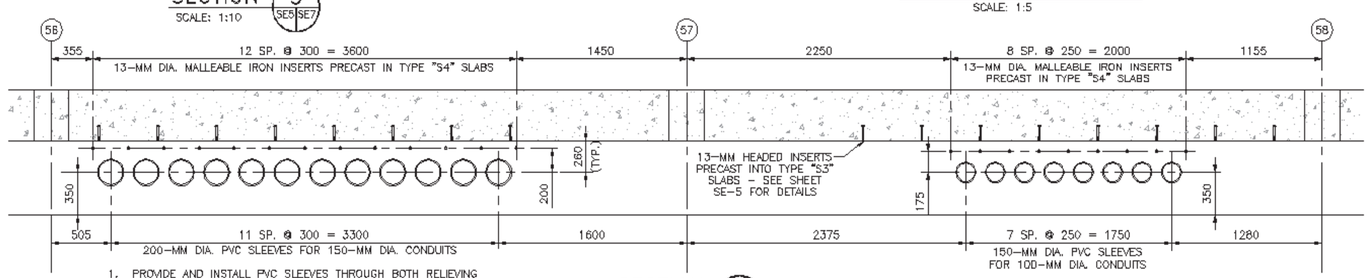

1. PROVIDE AND INSTALL PVC SLEEVES THROUGH BOTH RELIEVING PLATFORM BEAMS.
2. PROVIDE AND INSTALL 13-MM MALLEABLE IRON INSERTS ON THE EAST SIDE OF THE RELIEVING PLATFORM BEAM ALONG COLUMN LINE "A", AND ON THE WEST SIDE OF THE BEAM ALONG COLUMN LINE "B".

SECTION 5 (SE1 SE7)
SCALE: 1:20

(SEE SHEET E-33 FOR CONDUIT DETAILS)

GRAPHIC SCALES
1:5 — 0 100 300 500mm
1:10 — 0 100 500 1000mm
1:20 — 0 500 1000 2000mm

REVISIONS			
DESCRIPTION	DATE	APPROVED	

DESIGNED & ENGINEERED BY LANTDIV NAVAL FACILITIES ENGINEERING COMMAND

APPROVED
ACTIVITY - SATISFACTORY TO
DATE
APPROVED
FOR ETD FOR COMMANDER NAVFAC 9/27/01
DATE

A/E ETD
DESIGN HDK
DRAWN HDK
REVIEW
ED
CHIEF ARCH./ENGR.
PROJECT MANAGER DWB
FIRE PROTECTION KT
BRANCH MANAGER
DESIGN DIRECTOR

DEPARTMENT OF THE NAVY — NAVAL FACILITIES ENGINEERING COMMAND
ATLANTIC DIVISION — NORFOLK, VIRGINIA
NAVAL STATION — NORFOLK, VA.

PIER 3 REPLACEMENT

RELIEVING PLATFORM REINFORCING DETAILS

CODE ID. NO. 80091 SIZE D
SCALE: NOTED
ETD NO.
STA. PROJ. NO. P-226
SPEC. NO. 05-99-9111
CONTR. CONTS. NO. N62470-99-B-9111
NAVFAC DRAWING NO. 4439701
SHEET 150 OF 236

SE-7

FILENAME: 9111SE07.DWG, PLOT SCALE: 1=1, SAVED ON 08/23/01 AT 16:22, XREFS: C:\NORFOLK\PIER3\SFP111\9111SE04.DWG

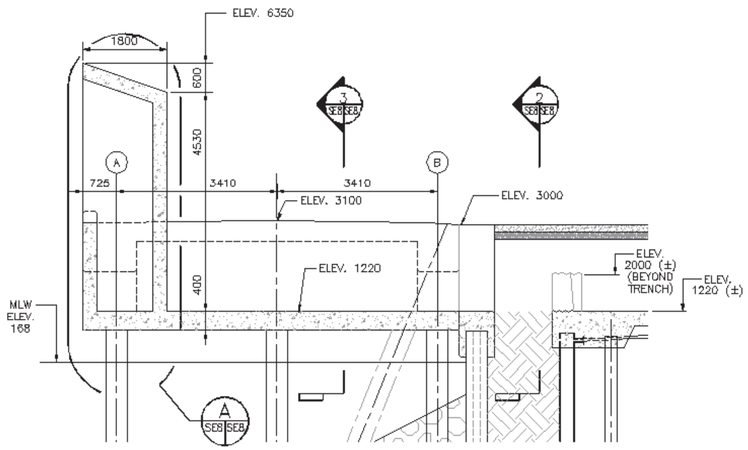

LONGITUDINAL TRENCH SECTION 1 SE1 SE8

SCALE: 1:50

UTILITY TRENCH NOTES

1. GALVANIZE ALL REINFORCING USED IN THE TRENCH FLOOR SLAB AND WALLS UP TO ELEV. 3045.
2. CONTRACTOR MAY, AT HIS OPTION, PRECAST THE TRENCH FLOOR SLAB, PROVIDING PILE POCKETS AND GROUT SLEEVES AT ALL PILE LOCATIONS.
3. EXPOSE AND SPLAY 750 MM OF PILE PRESTRESSING STRAND INTO TRENCH WALLS (TYP. ALL TRENCH-SUPPORT PILES).

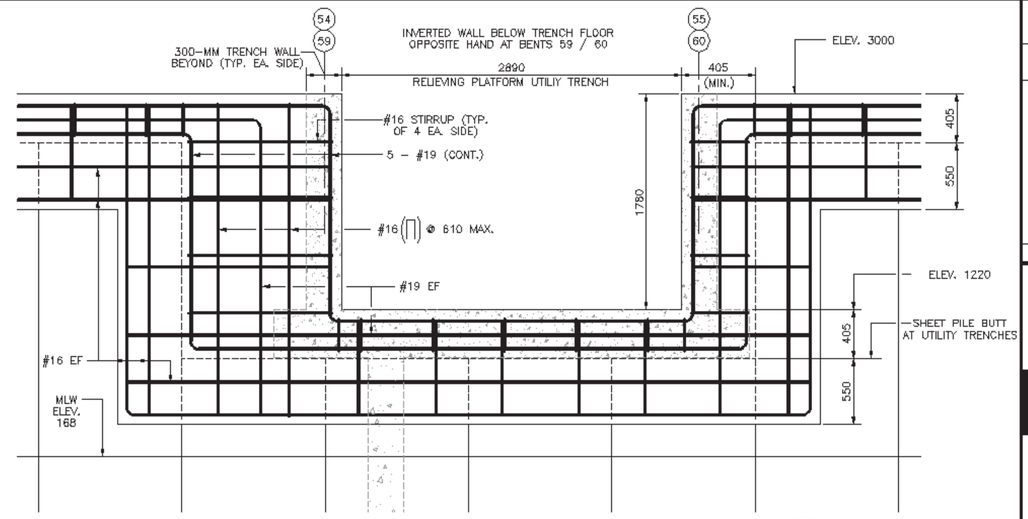

REAR BULKHEAD ELEVATION AT UTILITY TRENCHES 2 SE8 SE8

SCALE: 1:20

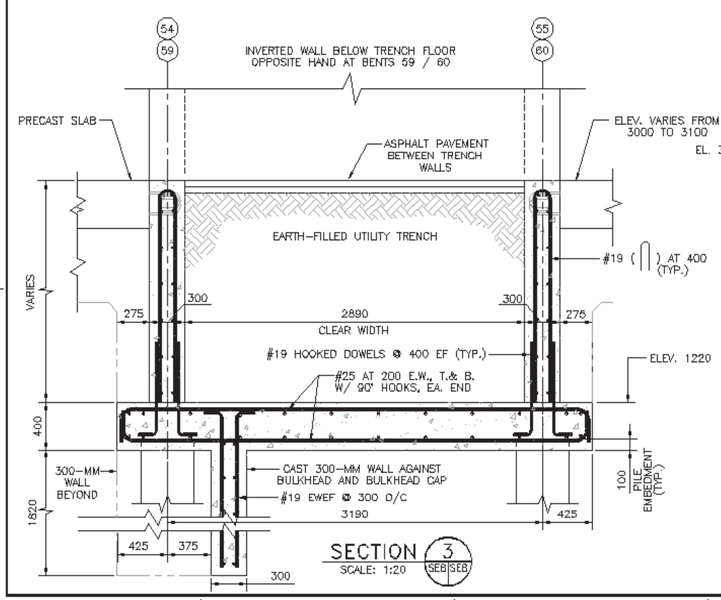

SECTION 3 SE8 SE8

SCALE: 1:20

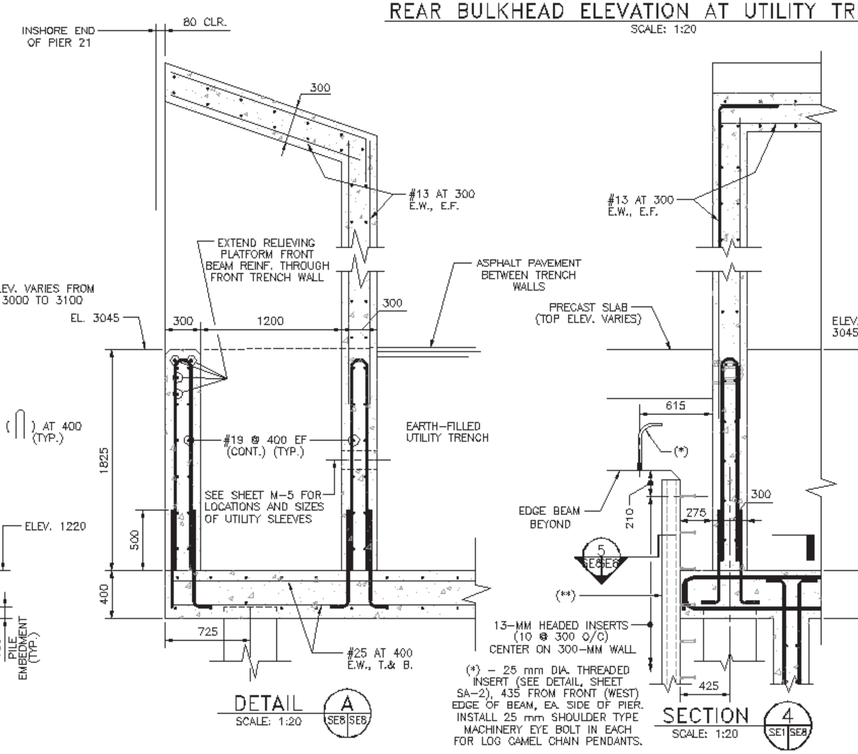

DETAIL A SE8 SE8

SCALE: 1:20

SECTION 4 SE1 SE8

SCALE: 1:20

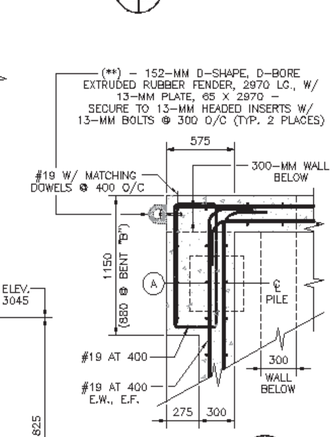

SECTION 5 SE8 SE8

SCALE: 1:20

(SIMILAR AT BENT "B")

TERMINATE ALL LONGITUDINAL RELIEVING PLATFORM BEAM REINFORCING WITH 180° HOOKS DOWELLED INTO THE TRENCH SIDE WALLS (SIMILAR TO PRECAST SLAB REINF.)

GRAPHIC SCALES

1:20 0 500 1000 2000mm

1:50 0 1000 3000 5000mm

REVISIONS			
SYM.	DESCRIPTION	DATE	APPROVED

DESIGNED & ENGINEERED BY LANTDIV NAVAL FACILITIES ENGINEERING COMMAND

SEAL

APPROVED ACTIVITY – SATISFACTORY TO

DATE

APPROVED FOR EFD FOR COMMANDER NAVFAC 9/27/01

DATE

A/E BTI

DESIGN RS/HK

DRAWN RS/HK

REVIEW BJD

SD

CHIEF ARCH / ENGR.

PROJECT MANAGER DWB

FIRE PROTECTION EJT

BRANCH MANAGER

DESIGN DIRECTOR

DEPARTMENT OF THE NAVY — NAVAL FACILITIES ENGINEERING COMMAND — ATLANTIC DIVISION — NORFOLK, VIRGINIA

NAVAL STATION NORFOLK, VA

PIER 3 REPLACEMENT

RELIEVING PLATFORM UTILITY TRENCH DETAILS

CODE ID. NO. 80091 SIZE D

SCALE: AS NOTED

EFD NO.

CON. INSTALL NO. P-226

SPEC. NO. 05-99-9111

CONTRACT CONTR. NO. N62470-99-B-9111

PROJECT DRAWING NO. 4439702

SHEET 151 OF 236

SE-8

FILENAME: 91115E08.DWG, PLOT SCALE: 1=1, SAVED ON 08/28/01 AT 15:32, XREFS: NONE

DRAWTOOL REVISION 27 JULY 98

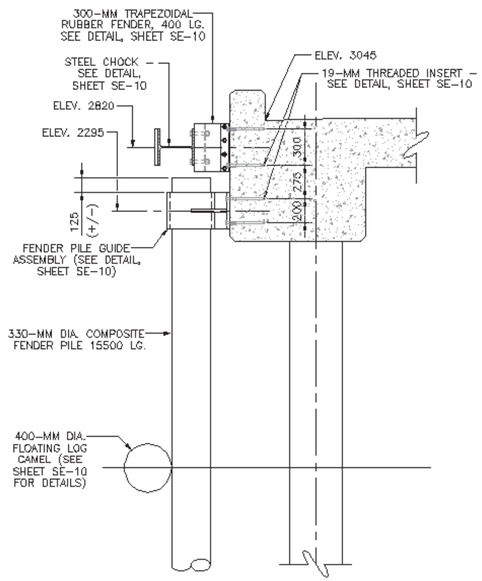

TYPICAL FENDER SECTION 1 SE8 SE8

SCALE: 1:20

(*) - PROVIDE AND INSTALL 2 CHOCK CHAIN RESTRAINTS PER STEEL CHOCK ASSEMBLY SEE "CHAIN RESTRAINT DETAIL", THIS SHEET

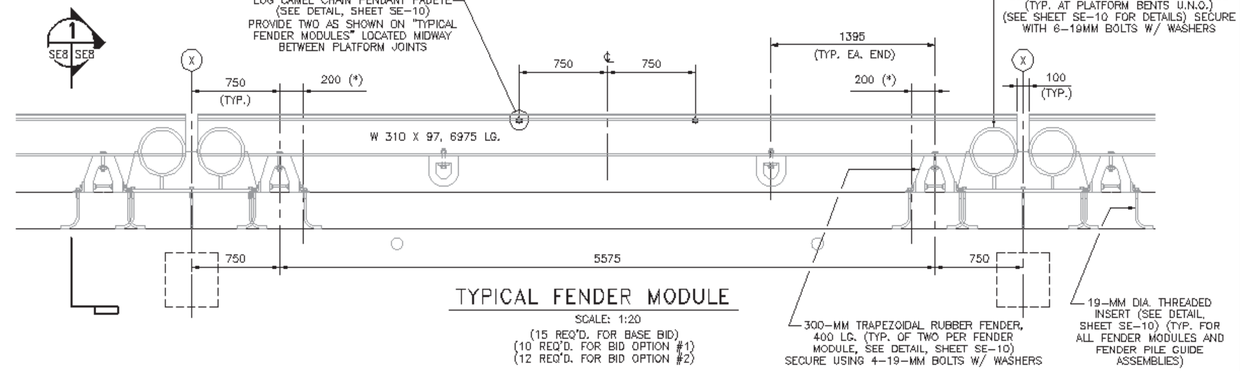

TYPICAL FENDER MODULE

SCALE: 1:20

(15 REQ'D. FOR BASE BID)
(10 REQ'D. FOR BID OPTION #1)
(12 REQ'D. FOR BID OPTION #2)

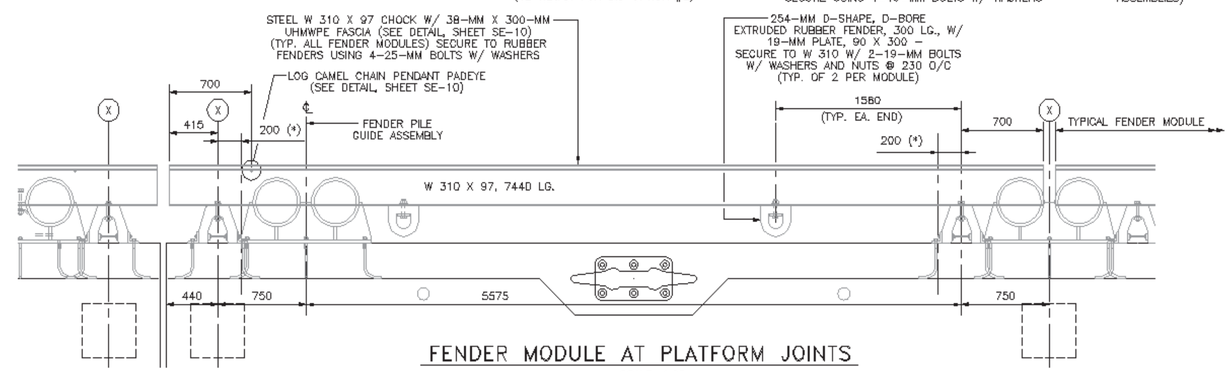

FENDER MODULE AT PLATFORM JOINTS

SCALE: 1:20

(6 REQ'D. FOR BASE BID)
(3 REQ'D. FOR BID OPTION #1)
(4 REQ'D. FOR BID OPTION #2)

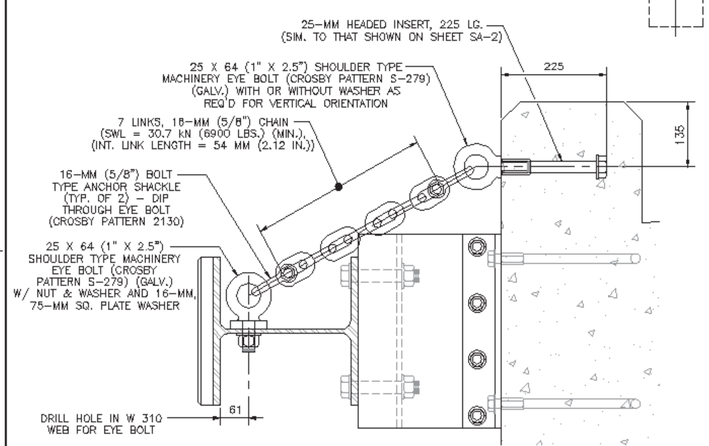

CHAIN RESTRAINT DETAIL

SCALE: 1:10

(TWO REQUIRED PER CHOCK ASSEMBLY)

GRAPHIC SCALES

1:10 0 100 500 1000mm

1:20 0 500 1000 2000mm

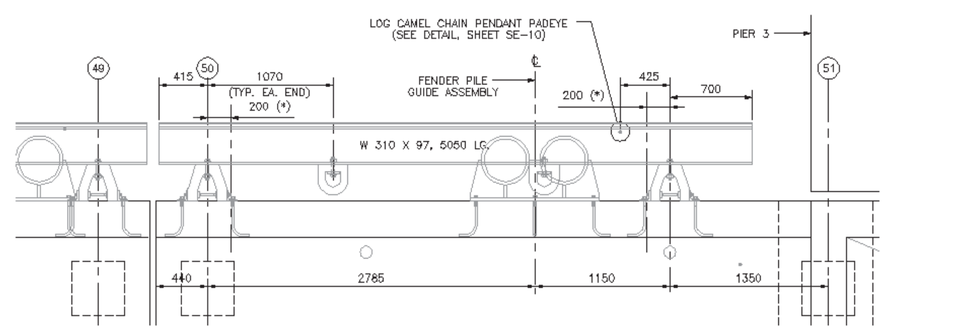

FENDER MODULE ADJACENT TO PIER 3

SCALE: 1:20

(2 REQ'D. FOR BASE BID)

REVISIONS			
SYM.	DESCRIPTION	DATE	APPROVED

DESIGNED & ENGINEERED BY LANTDIV NAVAL FACILITIES ENGINEERING COMMAND

APPROVED
ACTIVITY - SATISFACTORY TO
DATE
APPROVED
FOR CO FOR COMMANDER NAVFAC
9/27/01
DATE

A/E BTO
DESIGN HDK
DRAWN HDK
REVIEW BJD
CHIEF ARCH./ ENGR.
PROJECT MANAGER DWB
FIRE PROTECTION KJT
BRANCH MANAGER
DESIGN DIRECTOR

DEPARTMENT OF THE NAVY
NAVAL STATION
ATLANTIC DIVISION
NAVAL FACILITIES ENGINEERING COMMAND
NORFOLK, VIRGINIA
NAVAL STATION NORFOLK, VA
PIER 3 REPLACEMENT
RELIEVING PLATFORM FENDER SYSTEM DETAILS

CODE ID. NO. 80091 SIZE D
SCALE NOTED
STD NO.
STR. PROJ. NO. P-226
SPEC. NO. 05-99-9111
CONTR. CONTR. NO. N62470-99-B-9111
DRAWING DRAWING NO. 4439703
SHEET 152 OF 236
SE-9

FILENAME: 9111SE08.DWG, PLOT SCALE: 1=1, SAVED ON 08/28/01 AT 15:35, XREFS: 9111SEDI.DWG

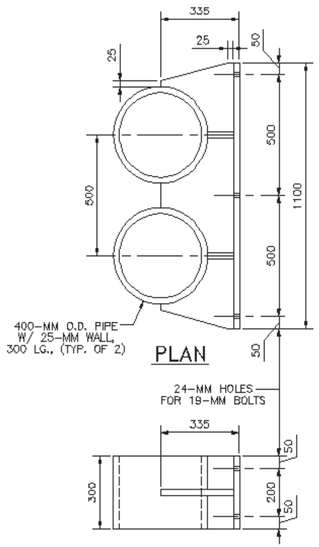

PLAN

SIDE ELEVATION

RELIEVING PLATFORM FENDER PILE GUIDE ASSEMBLY

SCALE: 1:10

FENDER PILE GUIDE FABRICATION NOTES

1. FABRICATE FENDER PILE GUIDE ASSEMBLIES USING 25-MM PLATE, ASSEMBLED WITH 19-MM CONTINUOUS FILLET WELDS, OR FULL PENETRATION SINGLE OR DOUBLE BEVEL WELDS, ALL AROUND, AS APPROPRIATE.
2. HOT - DIP GALVANIZE COMPLETED FABERICATIONS.

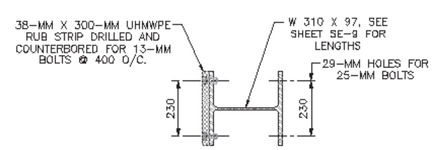

TYPICAL CHOCK SECTION

SCALE: 1:10

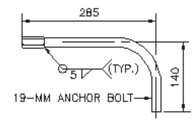

19-MM THREADED INSERT DETAIL

SCALE: 1:5

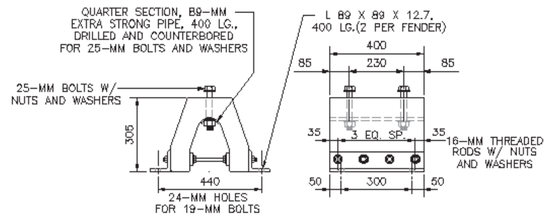

END ELEVATION SIDE ELEVATION

MIN. ENERGY ABSORPTION - 3.0 TON-METERS PER METER LENGTH @ 150-MM DEFLECTION
MAX. REACTION FORCE - 30 METRIC TONS PER METER LENGTH @ 150-MM DEFLECTION

300-MM TRAPEZOIDAL RUBBER FENDER DETAIL

SCALE: 1:10

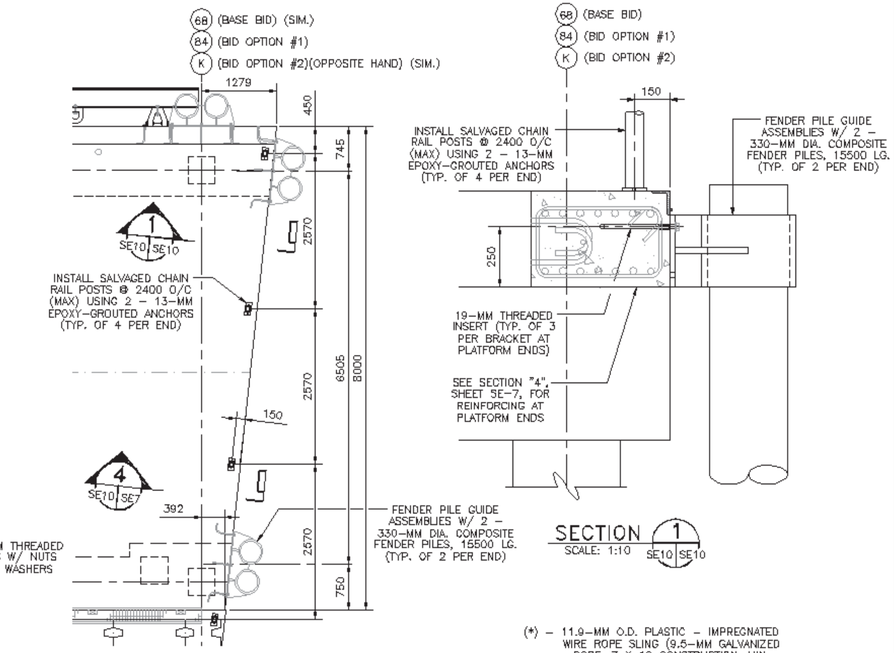

PLAN DETAIL - END OF NEW RELIEVING PLATFORM (A)

SCALE: 1:40

SECTION (1) SE10 SE10

SCALE: 1:10

(*) - 11.9-MM O.D. PLASTIC - IMPREGNATED WIRE ROPE SLING (9.5-MM GALVANIZED ROPE, 7 X 19 CONSTRUCTION, MIN. BREAK STRENGTH - 64 kN (14,400 LBS.)) W/ RESIN - POURED OPEN SOCKETS, EACH END (MACWHYTE "SPACE-LAY" MEETS THIS REQ.)

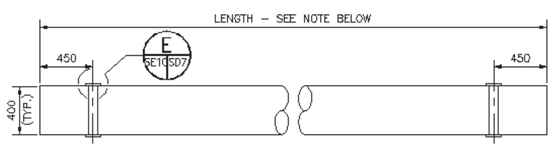

LOG CAMEL DETAIL

SCALE: 1:20

PROVIDE AND INSTALL FLOATING LOG CAMELS OF THE QUANTITIES AND LENGTHS AS FOLLOWS:

TYPICAL INSTALLATION 4 @ 24630 (BASE BID)
3 @ 24630 (BID OPTION #1)
2 @ 24630 (BID OPTION #2)
ADJACENT TO PIER 3 2 @ 29355

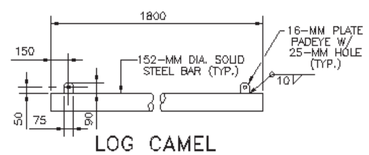

LOG CAMEL WEIGHT DETAIL

SCALE: 1:20

(5 REQ'D FOR BASE BID, 3 REQ'D FOR BID OPTION 1, 4 REQ'D FOR BID OPTION 2)

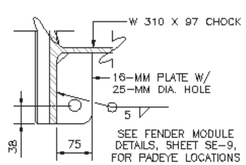

LOG CAMEL CHAIN PENDANT PADEYE DETAIL

SCALE: 1:5

CONTRACTOR MAY, AT HIS OPTION, USE PLASTIC-IMPREGNATED WIRE ROPE WITH 9.5-MM EXTRA HEAVY WIRE ROPE THIMBLES (CROSBY PATTERN SS-414) AND WIRE ROPE CLIPS EA. END PER THE WIRE ROPE MFG. RECOMMENDATIONS, WITH 16-MM BOLT-TYPE SAFETY ANCHOR SHACKLES IN LIEU OF THE RESIN-POURED SOCKETS.

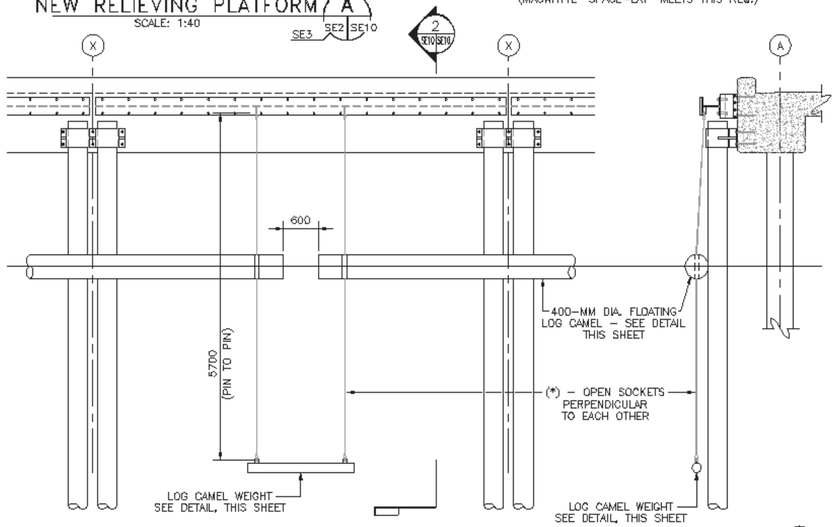

RELIEVING PLATFORM FENDER SYSTEM ELEVATION

SCALE: 1:40

SECTION (2) SE10 SE10

SCALE: 1:40

GRAPHIC SCALES

1:5 — 0, 100, 300, 500mm
1:10 — 0, 100, 500, 1000mm
1:20 — 0, 500, 1000, 2000mm
1:40 — 0, 1000, 2000, 4000mm

REVISIONS			
SYM.	DESCRIPTION	DATE	APPROVED

DESIGNED & ENGINEERED BY: LANTDIV NAVAL FACILITIES ENGINEERING COMMAND

APPROVED: ACTIVITY - SATISFACTORY TO
DATE:
APPROVED: FOR CDR FOR COMMANDER NAVFAC 9/27/01
DATE:

A/E BTD
DESIGN HDK
DRAWN HDK
REVIEW BJD
BD
CHIEF ARCH./ENGR.
PROJECT MANAGER DWB
FIRE PROTECTION KT
BRANCH MANAGER
DESIGN DIRECTOR

DEPARTMENT OF THE NAVY — NAVAL FACILITIES ENGINEERING COMMAND — ATLANTIC DIVISION — NAVAL STATION NORFOLK, VIRGINIA
NAVAL STATION
PIER 3 REPLACEMENT
RELIEVING PLATFORM FENDER SYSTEM DETAILS

CODE ID. NO. 80091 SIZE D
SCALE: NOTED
BTD NO.
STA. REQ'L NO. P-226
SPEC. NO. 05-99-9111
CONTR. CONTS NO. N62470-99-B-9111
NAVFAC DRAWING NO. 4439704
SHEET 153 OF 236
SE-10

FILENAME: 9111SE10.DWG, PLOT SCALE: 1=1, SAVED ON 08/28/01 AT 10:13, XREFS: NONE

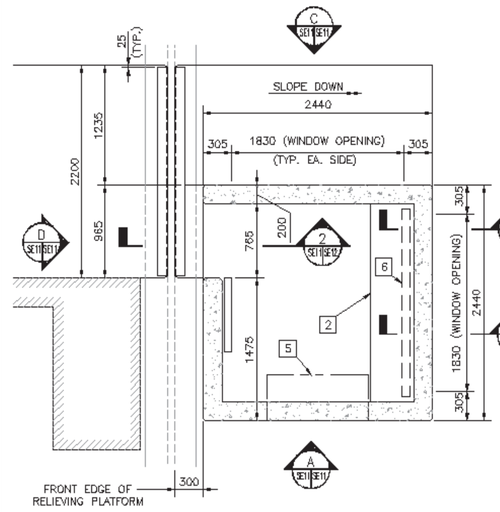

FLOOR / FOUNDATION PLAN

1 : 25

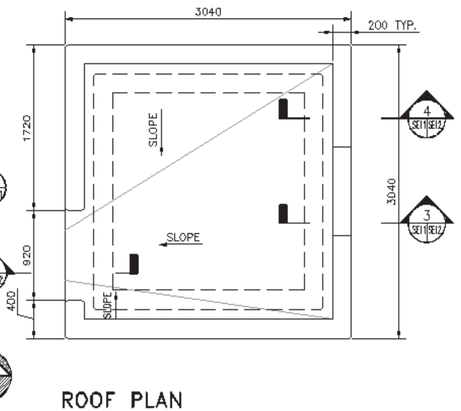

ROOF PLAN

1 : 25

KEYED NOTES

1. 16 GA. H.M. WINDOW WITH INSULATED FIXED, BRONZE TINTED GLASS. SEAL PERIMETER W/ EXTERIOR PAINTABLE CLEAR SEALANT.
2. SOLID PLASTIC COUNTERTOP, SEE DETAIL E/SE11/SE11.
3. SLIDING DOOR FLUSH, POLYSTYRENE INSULATED 18 GA. STEEL DOOR W/ HALF LITE.
4. NAVY OR ACTIVITY SEAL
5. THRU WALL PACKAGED TERMINAL HEAT PUMP. TOTAL CAPACITY OF 2696W COOLING, 2344W REV. CYCLE HEATING WITH ENTERING AIR CONDITIONS OF 24.4°C DB/18.3°C WB @ 146 L/s SUPPLY AIR. EVAPORATOR MAX. FACE VELOCITY OF 2.3m/s. 35°C CONDENSING TEMPERATURE. ELECTRIC 230/1ø/60HZ. STANDARD MANUFACTURER HEAT PUMP THERMOSTAT WITH SELECTOR SWITCH FEATURING "OFF-HEAT-AUTO-COOL" AND FAN SWITCH FEATURING "AUTO-ON". UNIT SHALL BE PROVIDED WITH AN INTEGRAL STARTING CONTACTOR.
6. ELECTRIC BASEBOARD HEATER. 1500W @ 6.25 AMPS, 240 VOLTS WITH BUILT-IN THERMOSTAT.

COLOR SCHEDULE

NOTE: MANUFACTURER'S NAMES & CATALOG NUMBERS ARE FOR REFERENCE OF DESIGN INTENT FOR PATTERN, COLOR, QUALITY AND TYPE OF MATERIAL, AND ARE NOT INTENDED TO LIMIT THE SELECTION. SIMILAR MATERIAL MAY BE SUBMITTED FOR REVIEW.

1. SOLID PLASTIC COUNTERTOP – SANTANA, POLY-MAR HD, NAVY BLUE #290 OR EQUAL
2. FRAMES & DOORS – METAL PRIMER & EXTERIOR SEMI-GLOSS ACRYLIC ENAMEL PAINT, DARK BROWN #20040

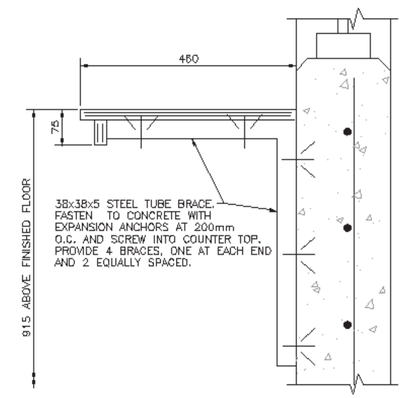

DETAIL

1 : 5

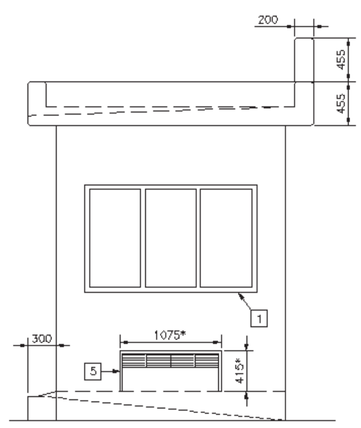

* COORDINATE ACTUAL DIMENSION WITH UNIT REQUIREMENTS.

ELEVATION

1 : 25

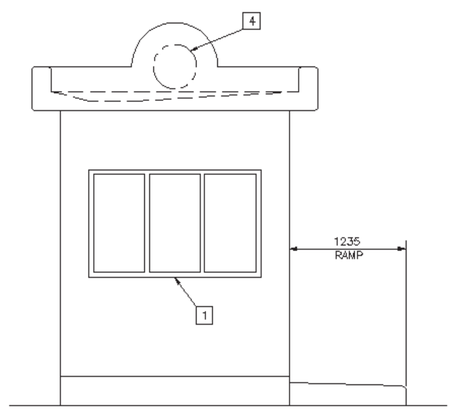

ELEVATION

1 : 25

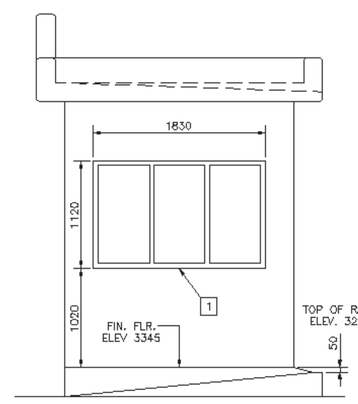

ELEVATION

1 : 25

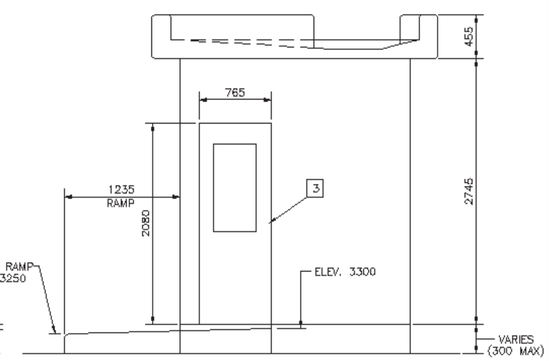

ELEVATION

1 : 25

GRAPHIC SCALES

1:25 0 500 1500 2500mm

1:5 0 100 300 500mm

REVISIONS			
SYM.	DESCRIPTION	DATE	APPROVED

DESIGNED & ENGINEERED BY LANTDIV NAVAL FACILITIES ENGINEERING COMMAND

APPROVED

ACTIVITY – SATISFACTORY TO

DATE

APPROVED

FOR CO FOR COMMANDER NAVFAC 9/07/01

DATE

A/E	CTO
DESIGN	HDK
DRAWN	BJD
REVIEW	BJD
CD	
CHIEF ARCH / ENGR.	
PROJECT MANAGER	DWB
FIRE PROTECTION	EJT
BRANCH MANAGER	
DESIGN DIRECTOR	

DEPARTMENT OF THE NAVY — NAVAL FACILITIES ENGINEERING COMMAND — ATLANTIC DIVISION — NORFOLK, VIRGINIA

NAVAL STATION

PIER 3 REPLACEMENT

GUARD SHACK PLANS, NOTES, AND ELEVATIONS

CODE ID. NO. 80091 SIZE D

SCALE: AS NOTED

CTO NO.

CON. INSTALL NO. P-226

SPEC. NO. 05-99-9111

CONTRT. CONTR. NO. N62470-99-B-9111

NAVFAC DRAWING NO. 4439705

SHEET 154 OF 236

SE-11

FILENAME: 9111SE11.DWG, PLOT SCALE: 1=1, SAVED ON 08/06/01 AT 16:06, XREFS: NONE

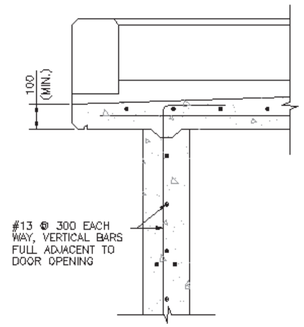

SECTION 1 (SE1/SE12)
1 : 10

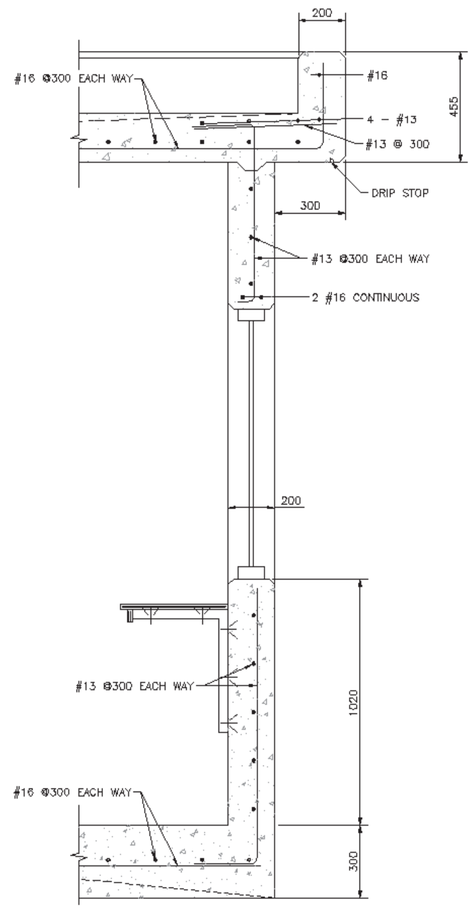

SECTION 3 (SE1/SE12)
1 : 10

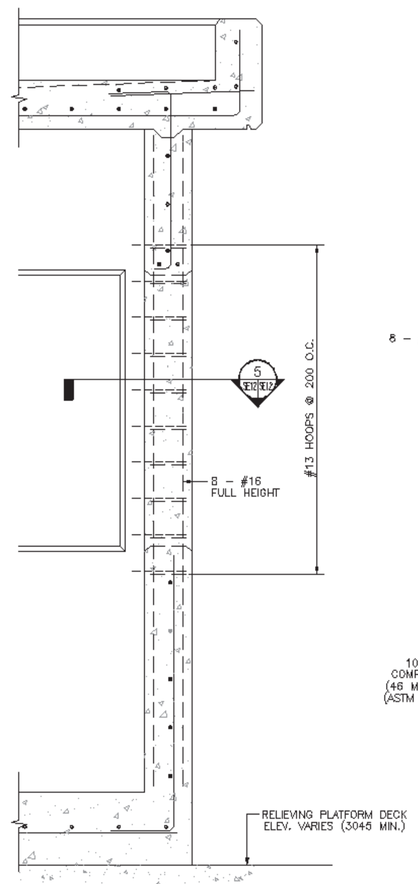

SECTION 4 (SE1/SE12)
1 : 10

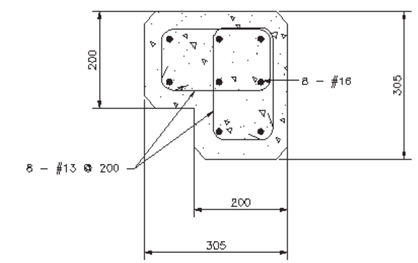

SECTION 5 (SE12/SE12)
1 : 5

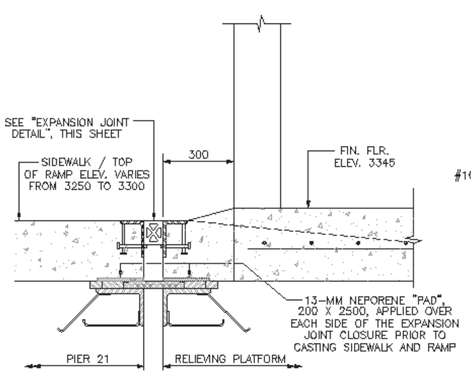

SECTION 2 (SE1/SE12)
1 : 10

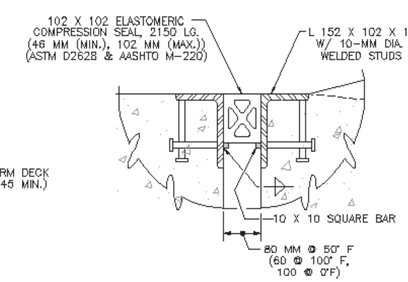

EXPANSION JOINT DETAIL
SCALE: 1:5

GRAPHIC SCALES

1:10 0 100 500 1000mm

1:5 0 100 300 500mm

REVISIONS

SYM.	DESCRIPTION	DATE	APPROVED

DESIGNED & ENGINEERED BY: LANTDIV NAVAL FACILITIES ENGINEERING COMMAND

APPROVED
ACTIVITY – SATISFACTORY TO
DATE
APPROVED
FOR CITY FOR COMMANDER NAVFAC
9/27/01
DATE

A/E BTO
DESIGN HDK
DRAWN BJD
REVIEW BJD
BD
CHIEF ARCH./ENGR.
PROJECT MANAGER DWB
FIRE PROTECTION KT
BRANCH MANAGER
DESIGN DIRECTOR

NAVAL FACILITIES ENGINEERING COMMAND
NORFOLK, VIRGINIA
ATLANTIC DIVISION
NAVAL STATION NORFOLK, VA
DEPARTMENT OF THE NAVY
NAVAL STATION
PIER 3 REPLACEMENT
GUARD SHACK DETAILS

CODE ID. NO. 80091 SIZE D
SCALE: AS NOTED
BTO NO.
STA. FASLL NO. P-226
SPEC. NO. 05-99-9111
CONTR. CONTR. NO. N62470-99-B-9111
NAVFAC DRAWING NO. 4439706
SHEET 156 OF 236
SE-12

FILENAME: 9111SE12.DWG, PLOT SCALE: 1=1, SAVED ON 07/02/01 AT 15:56, XREFS: 9111SE11.DWG