DESIGN DATA:

1. DESIGN CODES

   A. UFC 1-200-01, DESIGN: GENERAL BUILDING REQUIREMENTS
   B. MIL HANDBOOK 1025/1, PIERS AND WHARVES
   C. MIL HANDBOOK 1025/2, DOCKSIDE UTILITIES FOR SHIP SERVICE
   D. MIL HANDBOOK 1025/4, SEAWALLS, BULKHEADS, AND QUAYWALLS
   E. DESIGN MANUAL 7.01, SOIL MECHANICS
   F. DESIGN MANUAL 7.02, FOUNDATIONS AND EARTH STRUCTURES
   G. DESIGN MANUAL 26.4, FIXED MOORINGS
   H. STEEL AISC, NINTH EDITION
   I. CONCRETE, ACI 318-02
   J. WELDING, AWS D1.1

2. DESIGN LIVE LOADS

   A. VERTICAL

      1. UNIFORM – 14.36 KPa (300 PSF)
      2. TRUCK – HS20-44
      3. MOBILE CRANE OUTRIGGER
         a. OUTRIGGER ON SLAB – 334,000 N (75,000 LBS.)
         b. OUTRIGGER ON BEAMS – 668,000 N (150,000 LBS.)

   B. HORIZONTAL

      1. DECK FITTINGS
         a. 1067-MM (42-IN) CLEATS – 89,000 N (20,000 LBS.)

   C. LATERAL EARTH PRESSURES

      1. SOIL PROPERTIES FOR BULKHEAD ANALYSIS

SOIL	FROM EL.	TO EL.	ϕ	δ	γ(SUB.)	C
a.	+3100	-560	28	14	769 kg/M3	0
b.	-560	-3600	32	16	769 kg/M3	0
c.	-3600	-5400	0	0	529 kg/M3	38.3 KPa
d.	-5400	-10600	22	11	689 kg/M3	0
e.	-10600		32	16	769 kg/M3	0

      2. SURCHARGE
         a. BOAT RAMP – 2.39 KPa (50 PSF)
         b. AREA C – 4.79 KPa (100 PSF)
         c. ALL OTHER AREAS – 14.36 KPa (300 PSF)

   D. PILE DATA

      1. BEARING CAPACITY
         a. 136 MT (150 TONS) COMPRESSION
         b. 68 MT (75 TONS) TENSION
      2. EST. BID LENGTH
         a. 30.4 M (VERTICAL)
         b. 32.0 M (BATTER)
      3. DESIGN THE EFFECTIVE PRESTRESS (AFTER LOSSES) TO PREVENT NET CONCRETE TENSION AT FULL TENSILE PILE LOADING.

   E. SEE SHEET S-502 FOR FLOATING PIER AND GANGWAY LOADING CRITERIA.
   F. SEE SHEET S-601 FOR PRE-ENGINEERED BOAT SHED LOADING CRITERIA.

MATERIAL NOTES:

1. CONCRETE

   A. PRECAST, PRESTRESSED — FC = 42MPa (6000 PSI)
   B. PRECAST – FLOATING PIER — FC = 35MPa (5000 PSI)
   C. PRECAST – ALL OTHER — FC = 42MPa (6000 PSI)
   C. CAST IN PLACE — FC = 42MPa (6000 PSI)

2. STEEL

   A. REINFORCING — ASTM A615, FY = 414 MPa (60,000 PSI)
   B. GALVANIZED REINFORCING — ASTM A706, FY = 414 MPa (60,000 PSI)
   C. STRUCTURAL SHAPES — ASTM A36, FY = 248 MPa (36,000 PSI)
   D. DECK FITTINGS — ASTM A148
   E. THREADED FASTENERS — ASTM A36 / A307
   F. DECK FITTING/ FENDER RAIL FASTENERS — ASTM A449
   G. FENDER SYSTEM CHOCKS – ASTM A572, GRADE 50
   H. WELDING ELECTRODES — E70XX

GENERAL CONSTRUCTION NOTES:

1. PROVIDE AND INSTALL TRENCH DRAINS OF THE MAXIMUM CONTINUOUS LENGTHS POSSIBLE BETWEEN PLATFORM JOINTS, IN MULTIPLES OF THE NOMINAL 610-MM GRATING LENGTH AS FOLLOWS:

   BENTS BA – BE 28670
   BENTS BF – BM 44836 (*)
   BENTS BN – BT 38430
   BENTS D1 – D10 56730
   BENTS D11 – D19 58560
   BENTS DA – DB 7650 (*)
   BENTS EA – EI 56120

   (*) – REQUIRES NON-STANDARD GRATING LENGTH

PILE CONSTRUCTION NOTES:

1. ACHIEVE ANCHORAGE BY EXPOSING, SPLAYING, AND CASTING THE PILE PRESTRESSING STRAND INTO CONCRETE CAPS. THE CONTRACTOR MAY, AT HIS OPTION, SUBMIT FOR APPROVAL ALTERNATIVE MEANS FOR ACHIEVING A LIVE LOAD ANCHORAGE OF 68 METRIC TONS.
2. COAT THE TOP 7500 MM OF SQUARE CONCRETE PILES AND CONCRETE SHEET PILES WITH EP-3 PRIOR TO DRIVING.

CONCRETE CONSTRUCTION NOTES:

1. PROVIDE A 40-MM CHAMFER ON ALL OUTSIDE CONCRETE CORNERS.
2. PROVIDE 75-MM COVER OVER ALL REINFORCING IN THE SMALL BOAT BASIN.
3. HOT-DIP GALVANIZE ALL REINFORCING USED IN THE CAST-IN-PLACE CONCRETE CAPS, SLABS, AND BEAMS. PRECAST CONCRETE REINFORCEMENT IS NOT GALVANIZED.
4. INTENTIONALLY ROUGHEN AND APPLY EPOXY BONDING COMPOUND TO ALL PREVIOUSLY-CAST CONCRETE SURFACES AGAINST WHICH FRESH CONCRETE IS TO BE CAST.

STEEL CONSTRUCTION NOTES:

1. HOT-DIP GALVANIZE ALL STEEL FASTENERS, SHAPES, PIECES, AND FABRICATIONS (AFTER ASSEMBLY).

SIGNAGE:

1. SIGNS SHALL BE MADE OF ALUMINUM.
2. CONTACT THE CONTRACTING OFFICER FOR SIZE, COLORS, EXACT WORDING, LOCATION, AND PREFERRED METHOD OF MOUNTING.
2. ONE SIGN OF EACH TYPE, AS SHOWN BELOW, SHALL BE PROVIDED.

WARNING
U S NAVY
RESTRICTED AREA
KEEP OUT
USE OF FORCE AUTHORIZED

END
BOAT
RAMP

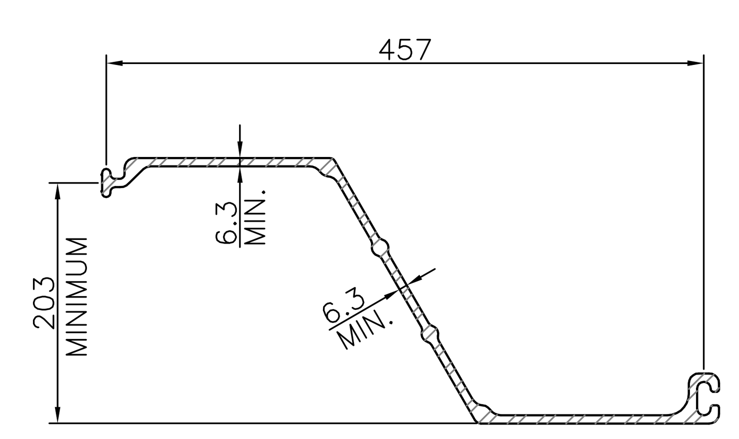

FIBER REINFORCED POLYMER (FRP) SHEET PILE SECTION PROPERTIES
NOT TO SCALE

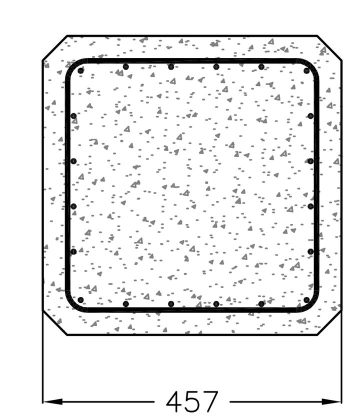

457-MM SQUARE PILE
NOT TO SCALE

SHEET SECTIONS SHALL HAVE THE FOLLOWING PROPERTY VALUES:

THICKNESS	305 mm	406 mm
WIDTH	1220 mm	1220 mm
ALLOWABLE MOMENT	128.1 kN-M/M	227.8 kN-M/M
AREA	3048 cm2/M	4064 cm2/M
SECTION MODULUS	15484 cm3/M	27527 cm3/M
MOMENT OF INERTIA	235973 cm4/M	559345 cm4/M

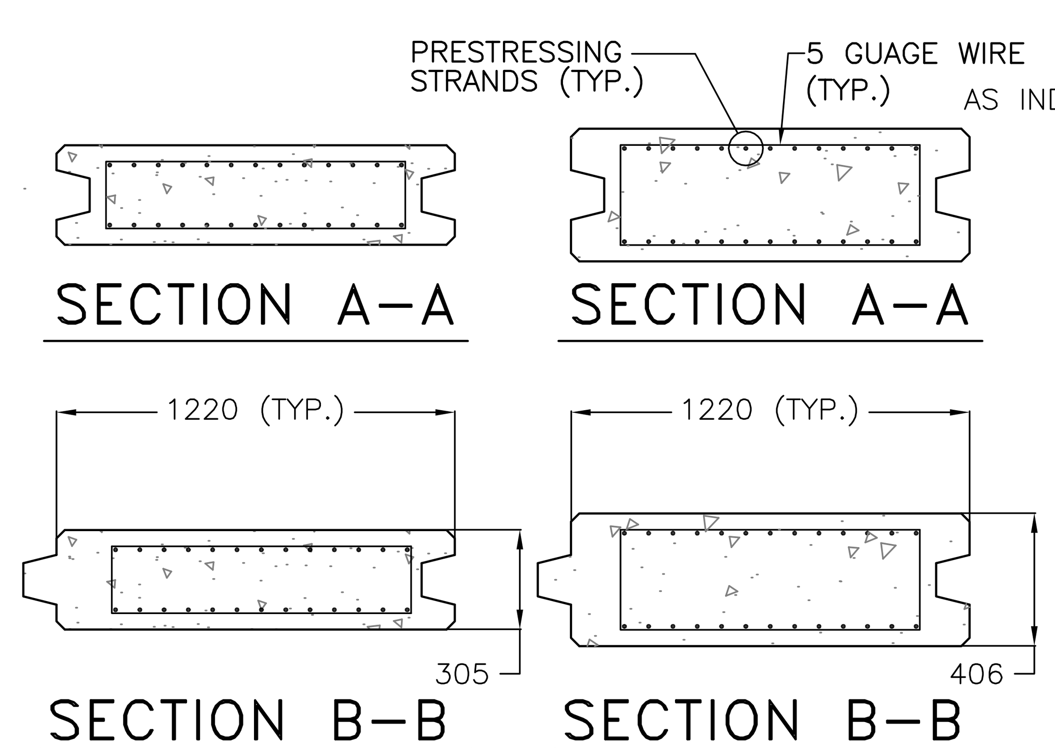

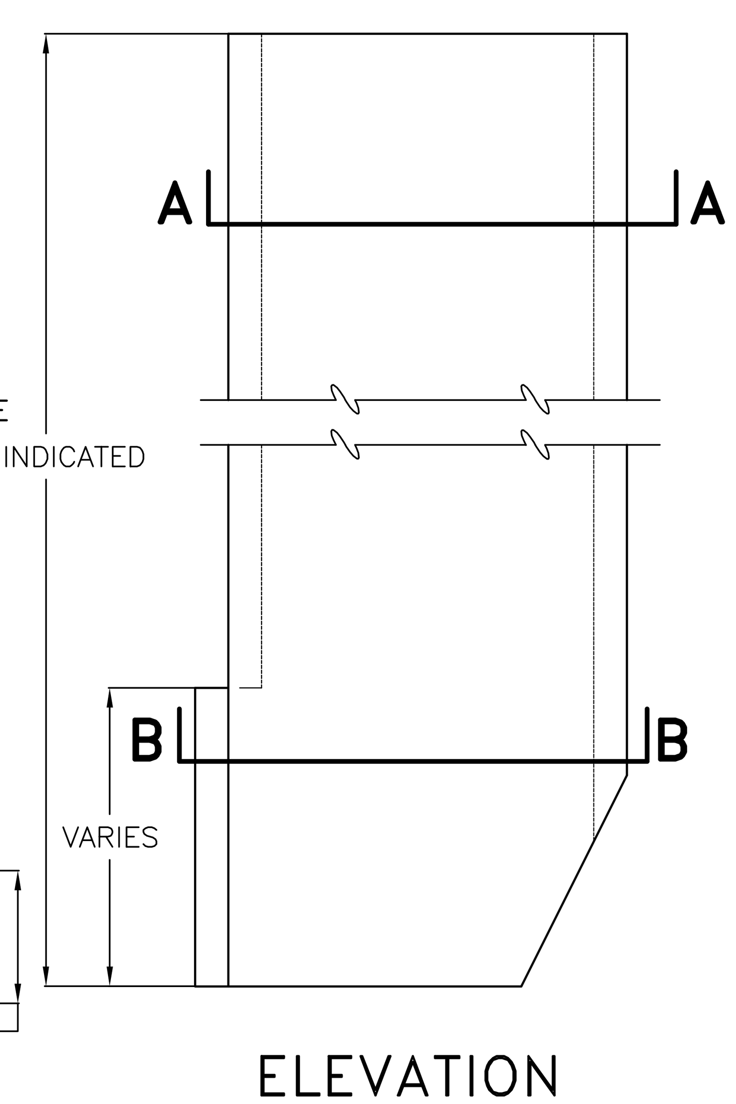

PRECAST CONCRETE SHEET PILE DETAILS
NOT TO SCALE

DESIGNED & ENGINEERED BY: LANTDIV NAVAL FACILITIES ENGINEERING COMMAND

SEAL

APPROVED
ACTIVITY – SATISFACTORY TO
DATE
APPROVED
J.P. Bowen
FOR EFD FOR COMMANDER NAVFAC
10/02/03
DATE

A/E		EFD
	DESIGN	BAE
	DRAWN	BAE
	REVIEW	RCK
	QC	
	CHIEF ARCH./ ENGR.	

PROJECT MANAGER KB
FIRE PROTECTION
BRANCH MANAGER
DESIGN DIRECTOR

DEPARTMENT OF THE NAVY
NAVAL FACILITIES ENGINEERING COMMAND
ATLANTIC DIVISION
NAVAL STATION NORFOLK, VIRGINIA
NAVAL STATION NORFOLK, VIRGINIA

SMALL CRAFT BASIN

GENERAL NOTES

CODE ID. NO. 80091 — SIZE D
SCALE: AS NOTED
EFD NO.
STA. PROJ. NO. P-094
SPEC. NO. 05-03-3066
CONSTR. CONTR. NO. N62470-03-B-3066
NAVFAC DRAWING NO. 4501296
SHEET 59 OF 123

S-101

DRAWFORM REVISION SEPT 2001

FILENAME: 5A0960-S-101.DWG, UPDATED ON 09/23/03 AT 14:24, XREFS: 0960PROJ-INFO

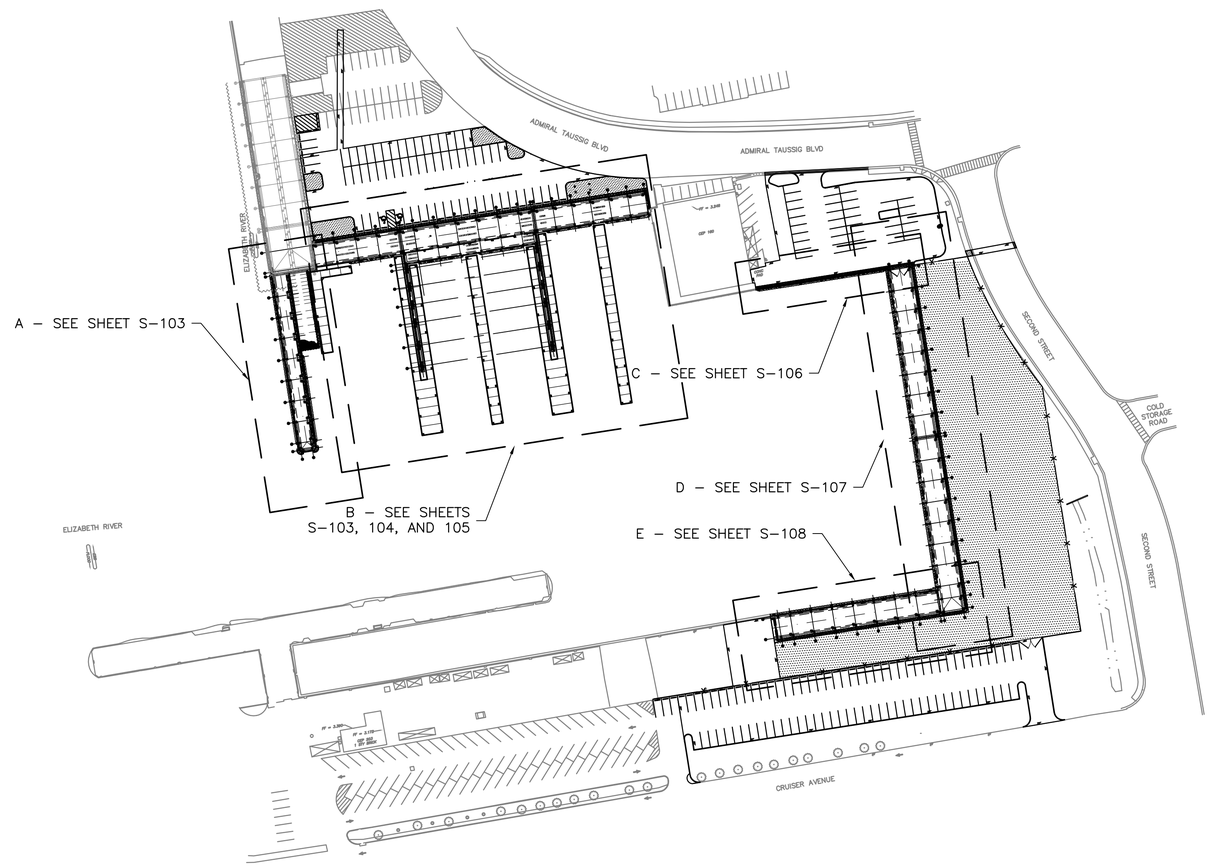

OVERALL PLAN
1 : 100

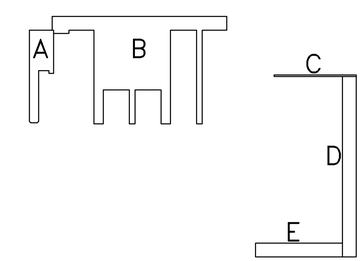

KEY PLAN
NTS

GRAPHIC SCALE
1:1000 0 50 100m

		APPR
		DATE
		DESCRIPTION
		STM.

DESIGNED & ENGINEERED BY:
LANTDIV
NAVAL FACILITIES ENGINEERING COMMAND

SEAL

APPROVED

ACTIVITY – SATISFACTORY TO

DATE

APPROVED
J P Bowen
FOR EFD FOR COMMANDER NAVFAC
10/02/03

DATE

A/E	EFD
DESIGN	BAE
DRAWN	BAE
REVIEW	RCK
QC	
CHIEF ARCH./ ENGR.	
PROJECT MANAGER	KB
FIRE PROTECTION	
BRANCH MANAGER	
DESIGN DIRECTOR	

DEPARTMENT OF THE NAVY
NAVAL FACILITIES ENGINEERING COMMAND
ATLANTIC DIVISION
NAVAL STATION NORFOLK, VIRGINIA
NAVAL STATION NORFOLK, VIRGINIA

SMALL CRAFT BASIN

OVERALL PLAN

CODE ID. NO. 80091 SIZE D

SCALE: AS NOTED

EFD NO.

STA. PROJ. NO. P–094

SPEC. NO. 05–03–3066

CONSTR. CONTR. NO.
N62470–03–B–3066

NAVFAC DRAWING NO.
4501297

SHEET 60 OF 123

S–102

DRAWFORM REVISION SEPT 2001

FILENAME: 5A0960–S–102.DWG, UPDATED ON 09/23/03 AT 14:04, XREFS: MASTER, X–NSITE5T, 0960PROJ–INFO

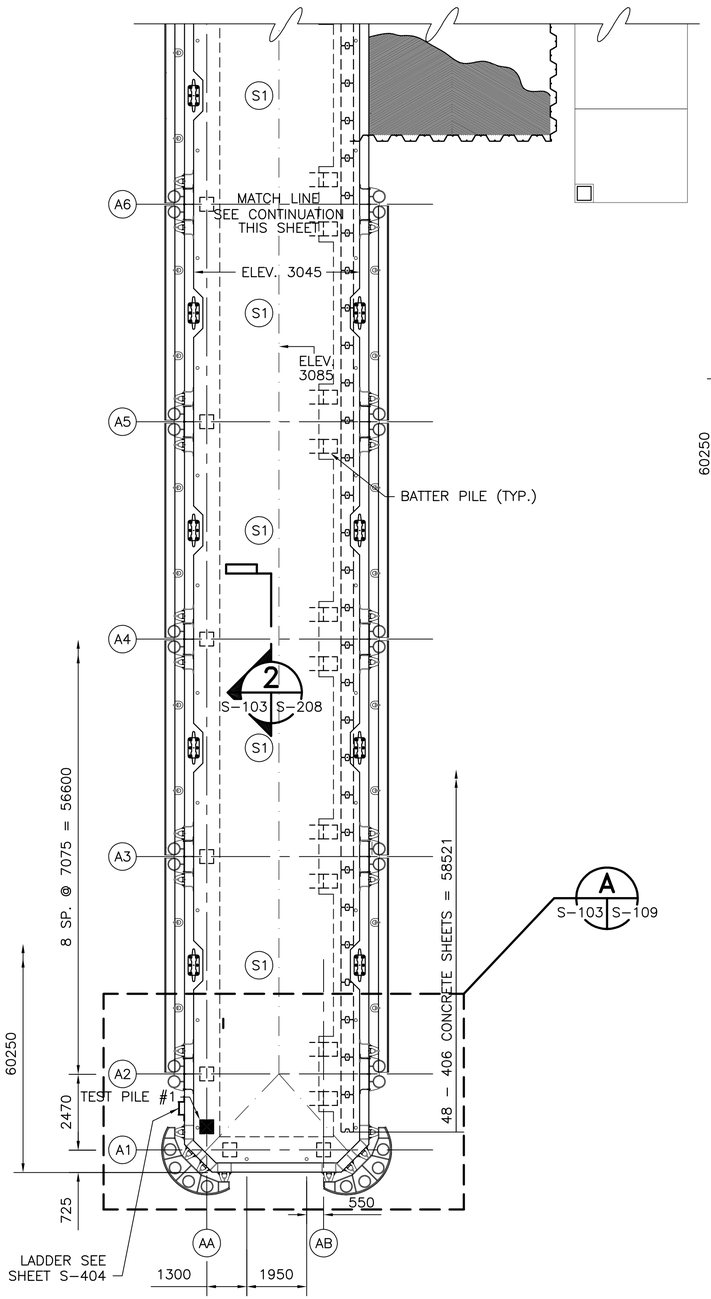

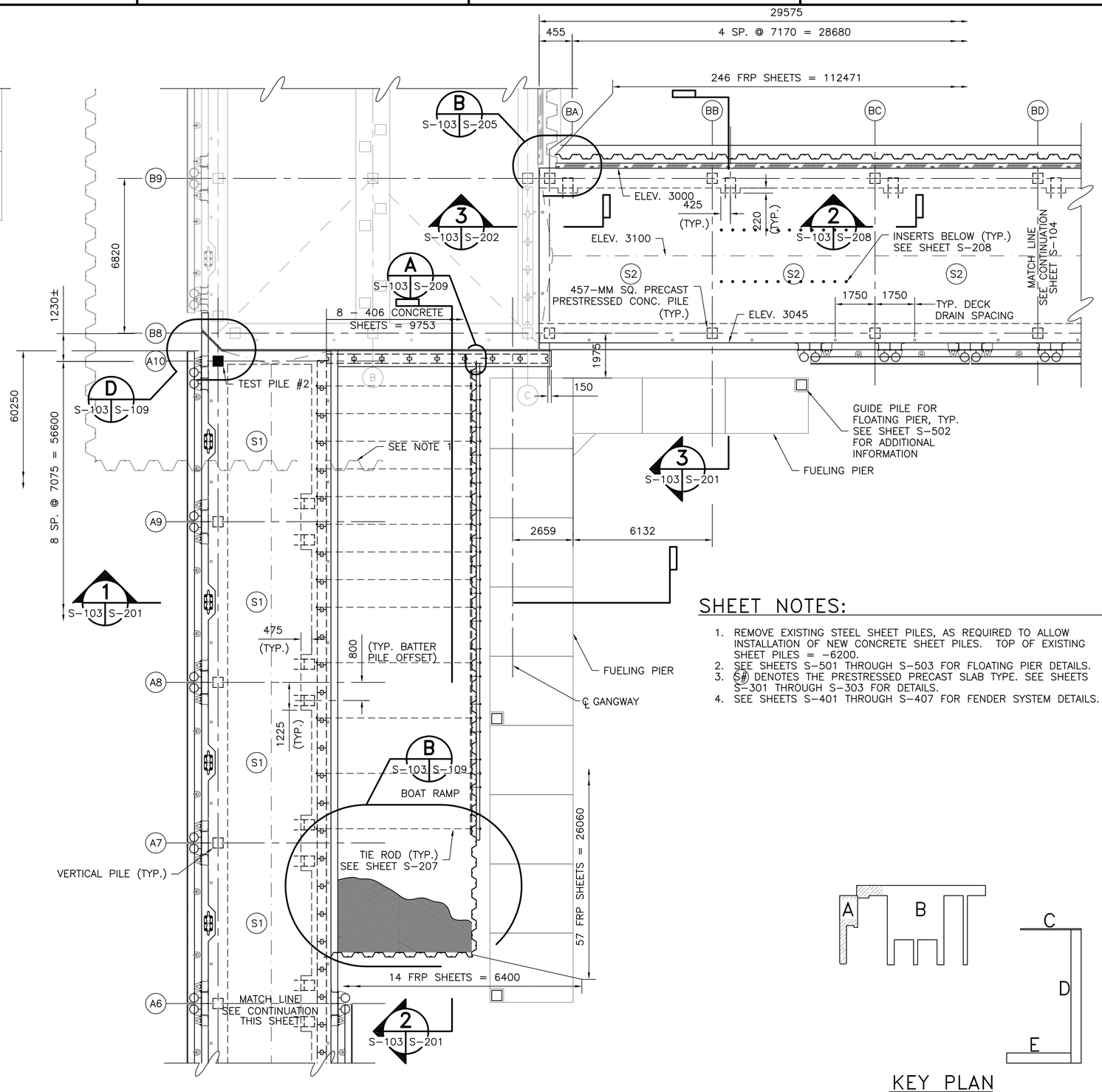

PARTIAL PLAN

1 : 100

SHEET NOTES:

1. REMOVE EXISTING STEEL SHEET PILES, AS REQUIRED TO ALLOW INSTALLATION OF NEW CONCRETE SHEET PILES. TOP OF EXISTING SHEET PILES = -6200.
2. SEE SHEETS S-501 THROUGH S-503 FOR FLOATING PIER DETAILS.
3. S# DENOTES THE PRESTRESSED PRECAST SLAB TYPE. SEE SHEETS S-301 THROUGH S-303 FOR DETAILS.
4. SEE SHEETS S-401 THROUGH S-407 FOR FENDER SYSTEM DETAILS.

KEY PLAN

NTS

GRAPHIC SCALE

1:100 0 1 5 10m

DESIGNED & ENGINEERED BY:
LANTDIV
NAVAL FACILITIES ENGINEERING COMMAND

APPROVED
ACTIVITY - SATISFACTORY TO
DATE
APPROVED
FOR EFD FOR COMMANDER NAVFAC
10/02/03
DATE

A/E	EFD
DESIGN	BAE
DRAWN	BAE
REVIEW	RCK
QC	
CHIEF ARCH./ ENGR.	
PROJECT MANAGER	KB
FIRE PROTECTION	
BRANCH MANAGER	
DESIGN DIRECTOR	

DEPARTMENT OF THE NAVY
NAVAL STATION
NAVAL STATION
NORFOLK, VIRGINIA
NAVAL FACILITIES ENGINEERING COMMAND
ATLANTIC DIVISION
NORFOLK, VIRGINIA

SMALL CRAFT BASIN

PARTIAL PLAN

CODE ID. NO. 80091 SIZE D
SCALE: AS NOTED
EFD NO.
STA. PROJ. NO. P-094
SPEC. NO. 05-03-3066
CONSTR. CONTR. NO.
N62470-03-B-3066
NAVFAC DRAWING NO.
4501298
SHEET 61 OF 123

S-103

DRAWFORM REVISION MAY 2000

FILENAME: 5A0960-S-103.DWG, UPDATED ON 09/23/03 AT 13:57, XREFS: MASTER, 0960PROJ-INFO

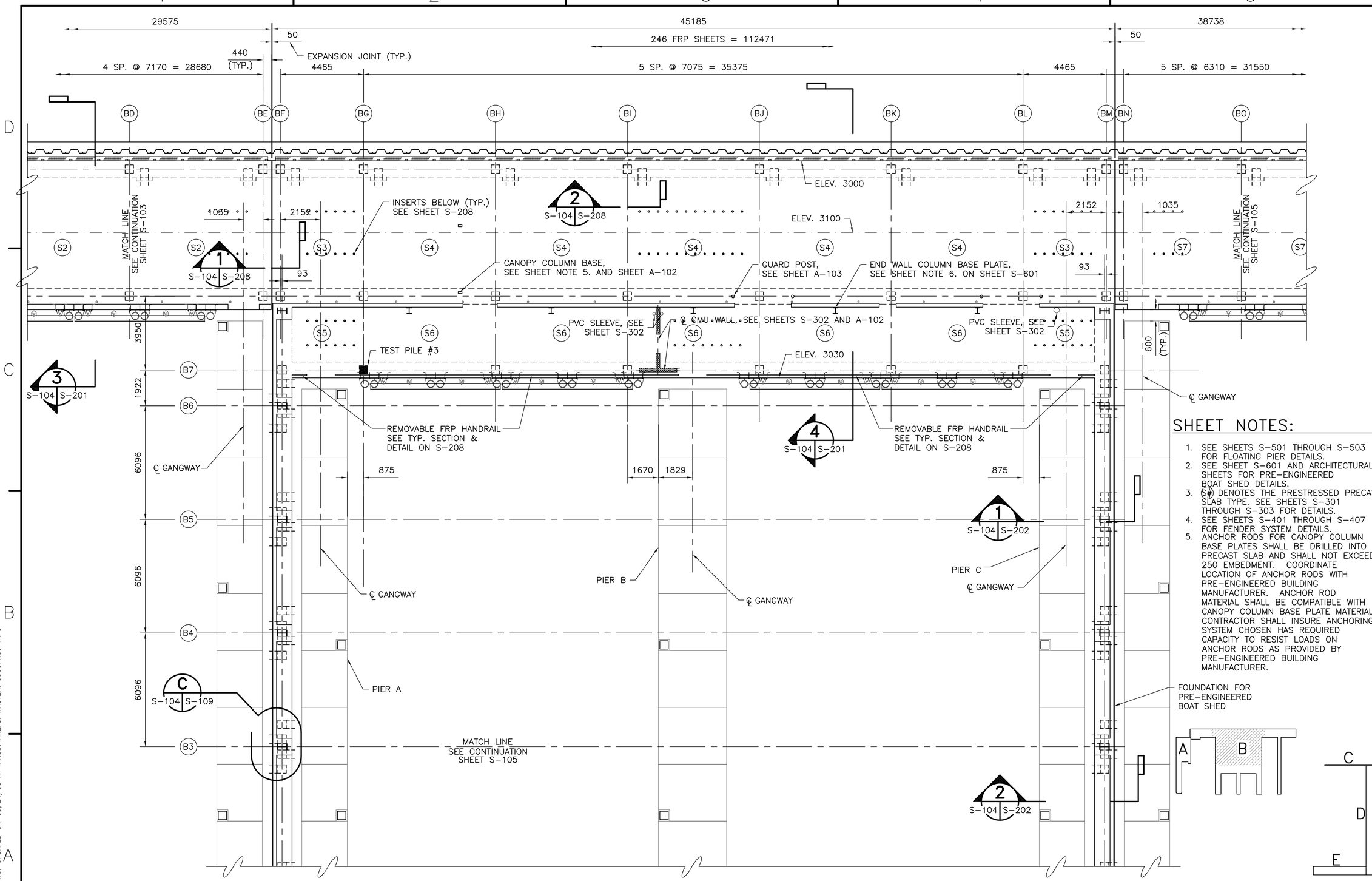

SHEET NOTES:

1. SEE SHEETS S-501 THROUGH S-503 FOR FLOATING PIER DETAILS.
2. SEE SHEET S-601 AND ARCHITECTURAL SHEETS FOR PRE-ENGINEERED BOAT SHED DETAILS.
3. S# DENOTES THE PRESTRESSED PRECAST SLAB TYPE. SEE SHEETS S-301 THROUGH S-303 FOR DETAILS.
4. SEE SHEETS S-401 THROUGH S-407 FOR FENDER SYSTEM DETAILS.
5. ANCHOR RODS FOR CANOPY COLUMN BASE PLATES SHALL BE DRILLED INTO PRECAST SLAB AND SHALL NOT EXCEED 250 EMBEDMENT. COORDINATE LOCATION OF ANCHOR RODS WITH PRE-ENGINEERED BUILDING MANUFACTURER. ANCHOR ROD MATERIAL SHALL BE COMPATIBLE WITH CANOPY COLUMN BASE PLATE MATERIAL. CONTRACTOR SHALL INSURE ANCHORING SYSTEM CHOSEN HAS REQUIRED CAPACITY TO RESIST LOADS ON ANCHOR RODS AS PROVIDED BY PRE-ENGINEERED BUILDING MANUFACTURER.

PARTIAL PLAN
1 : 100

KEY PLAN
NTS

GRAPHIC SCALE
1:100 0 1 5 10m

DATE	APPR	DESCRIPTION	STAL

DESIGNED & ENGINEERED BY: LANTDIV NAVAL FACILITIES ENGINEERING COMMAND

SEAL

APPROVED

ACTIVITY – SATISFACTORY TO

DATE

APPROVED J.P. Bowen FOR EFD FOR COMMANDER NAVFAC 10/02/03

DATE

A/E	EFD
DESIGN	BAE
DRAWN	BAE
REVIEW	RCK
QC	
CHIEF ARCH./ ENGR.	
PROJECT MANAGER	KB
FIRE PROTECTION	
BRANCH MANAGER	
DESIGN DIRECTOR	

DEPARTMENT OF THE NAVY
NAVAL STATION NORFOLK, VIRGINIA
NAVAL FACILITIES ENGINEERING COMMAND
ATLANTIC DIVISION
NAVAL STATION NORFOLK, VIRGINIA

SMALL CRAFT BASIN
PARTIAL PLAN

CODE ID. NO. 80091 SIZE D
SCALE: AS NOTED
EFD NO.
STA. PROJ. NO. P-094
SPEC. NO. 05-03-3066
CONSTR. CONTR. NO. N62470-03-B-3066
NAVFAC DRAWING NO. 4501299
SHEET 62 OF 123

S-104

DRAWFORM REVISION MAY 2000

FILENAME: 5A0960-S-104.DWG, UPDATED ON 09/24/03 AT 11:58, XREFS: MASTER, 0960PROJ-INFO

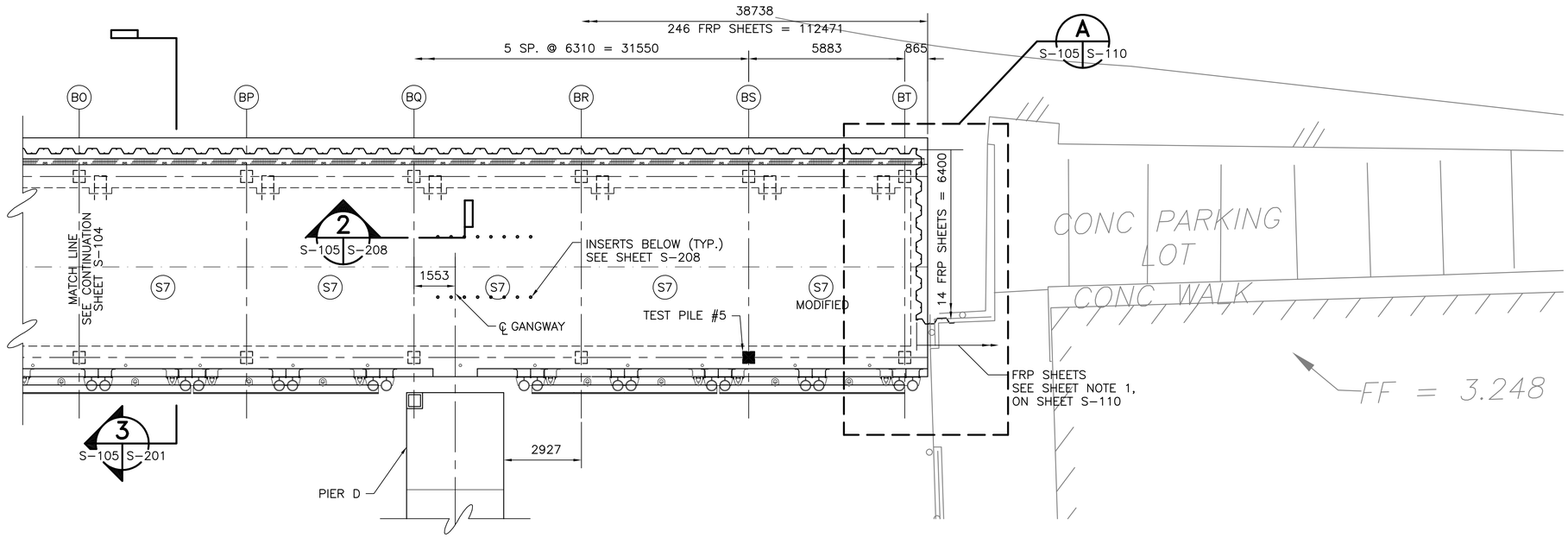

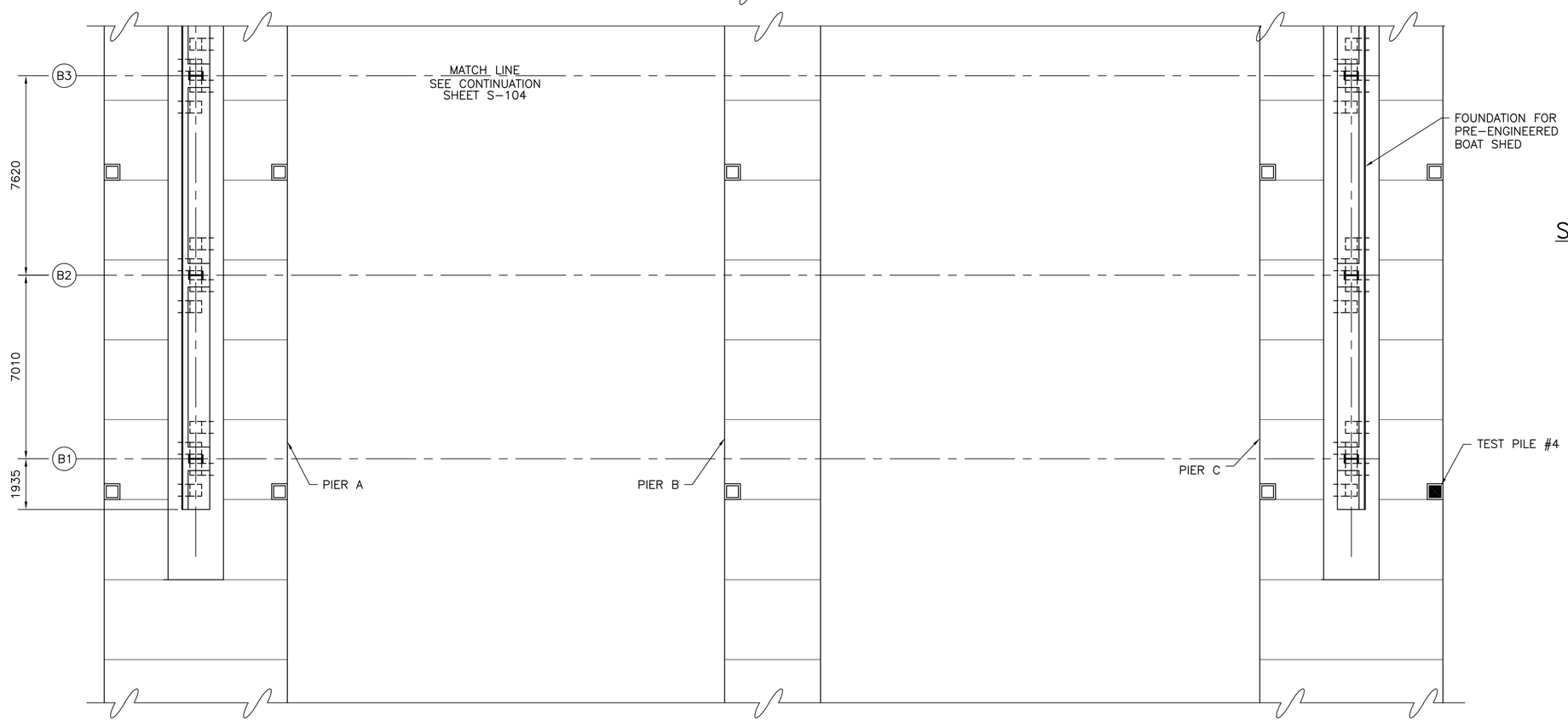

PARTIAL PLAN

1 : 100

SHEET NOTES:

1. SEE SHEETS S-501 THROUGH S-503 FOR FLOATING PIER DETAILS.
2. SEE SHEET S-601 AND ARCHITECTURAL SHEETS FOR PRE-ENGINEERED BOAT SHED DETAILS.
3. S# DENOTES THE PRESTRESSED PRECAST SLAB TYPE. SEE SHEETS S-301 THROUGH S-303 FOR DETAILS.
4. SEE SHEETS S-401 THROUGH S-407 FOR FENDER SYSTEM DETAILS.

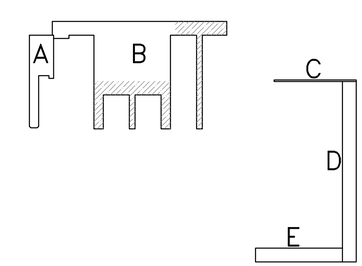

KEY PLAN

NTS

GRAPHIC SCALE

1:100 0 1 5 10m

DESIGNED & ENGINEERED BY:
LANTDIV
NAVAL FACILITIES ENGINEERING COMMAND

SHEET NOTES:

1. SEE SHEETS S–401 THROUGH S–407 FOR FENDER SYSTEM DETAILS.
2. EARTH ANCHORS, INCLUDING ANCHOR RODS AND ALL ATTACHMENTS, SHALL BE DESIGNED, STAMPED, AND SEALED BY A REGISTERED PROFESSIONAL ENGINEER. DESIGN DRAWINGS SHOWING MATERIALS, LAYOUT, AND ALL OTHER PERTINENT INFORMATION, SHALL BE SUBMITTED FOR REVIEW AND APPROVAL.
3. EARTH ANCHORS MAY BE, BUT NOT LIMITED TO, DRIVEN TIPPING PLATE ANCHORS, SCREW ANCHORS, OR DRILLED ANCHORS.
4. ANCHOR RODS SHALL HAVE A MINIMUM EMBEDMENT OF 6500 MM AND A MINIMUM DIAMETER OF 25 MM. SPACING OF ANCHOR RODS SHALL NOT EXCEED 8000 MM ON CENTER.
5. EARTH ANCHORS SHALL BE DESIGNED TO RESIST A WORKING LOAD OF 36.5 KN PER METER OF SHEET PILE WALL. EARTH ANCHORS SHALL BE PROOF TESTED TO REQUIRED WORKING LOAD OF ANCHOR. UPON REACHING THE PROOF TEST LOAD, THAT LOAD MUST BE HELD FOR A PERIOD OF 1 MINUTE DURING WHICH TIME THE MOVEMENT OF THE ANCHOR SHALL NOT EXCEED 12.5 MM. NOTIFY THE CONTRACTING OFFICER IF THE ANCHOR FAILS THE PROOF TEST. THE ANCHOR MUST ALSO MEET THE SPECIFIED MINIMUM EMBEDMENT LENGTH AFTER THE PROOF TEST.
6. A WRITTEN RECORD OF THE PROOF TEST LOADS ACHIEVED AND FINAL EMBEDMENT LENGTHS OF EACH ANCHOR SHALL BE SUBMITTED FOR APPROVAL.
7. ANCHOR RODS AND ATTACHMENT HARDWARE, SUCH AS, WASHERS, BEVELED WASHERS, STEEL PLATES AND NUTS OR EYENUTS SHALL BE COMPATIBLE AND SHALL BE HOT DIPPED GALVANIZED.

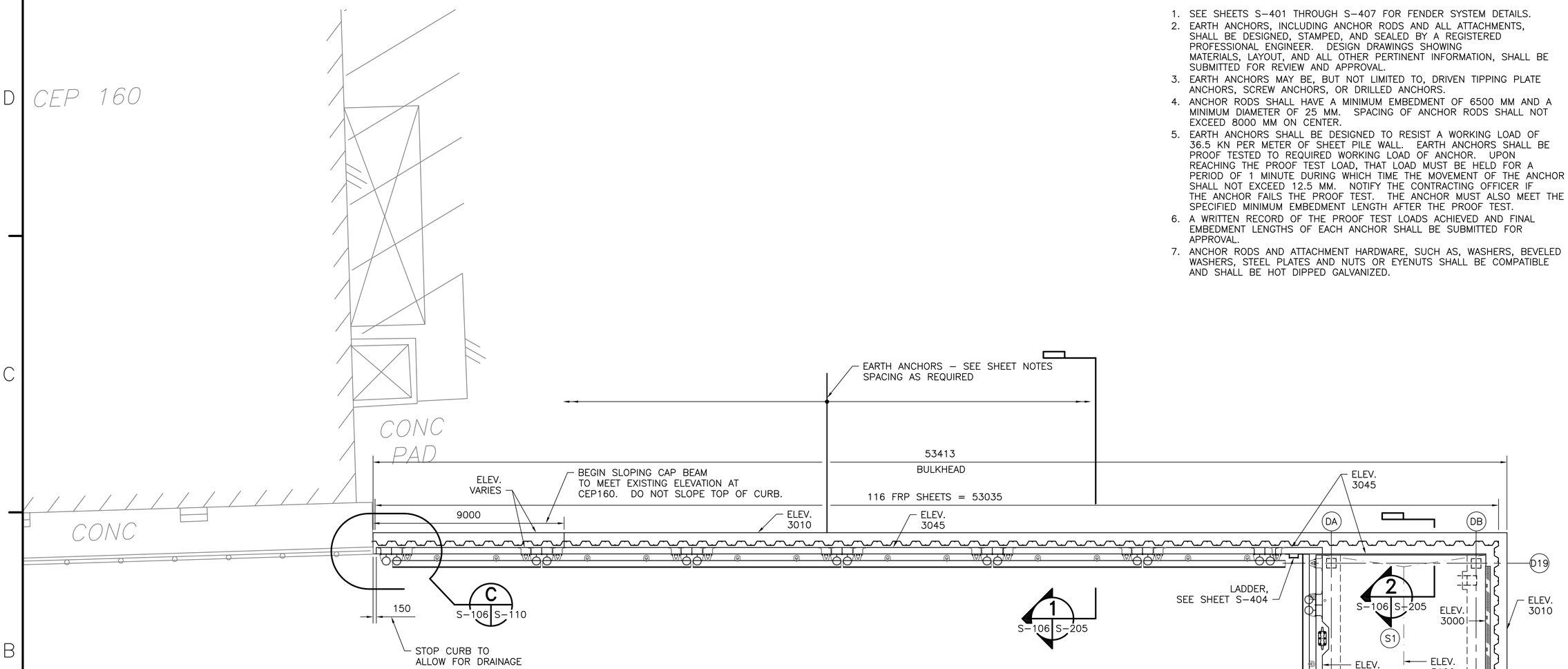

PARTIAL PLAN
1 : 100

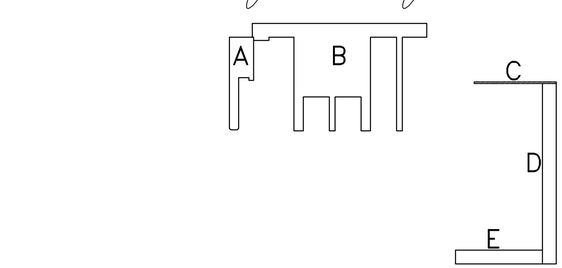

KEY PLAN
NTS

GRAPHIC SCALE
1:100 0 1 5 10m

APPR	DATE	DESCRIPTION	STAL

DESIGNED & ENGINEERED BY:
LANTDIV
NAVAL FACILITIES ENGINEERING COMMAND

SEAL

APPROVED
ACTIVITY – SATISFACTORY TO
DATE
APPROVED J P Bowen
FOR EFD FOR COMMANDER NAVFAC
10/02/03
DATE

A/E	EFD
DESIGN	BAE
DRAWN	BAE
REVIEW	RCK
QC	
CHIEF ARCH./ ENGR.	
PROJECT MANAGER	KB
FIRE PROTECTION	
BRANCH MANAGER	
DESIGN DIRECTOR	

DEPARTMENT OF THE NAVY
NAVAL STATION
NAVAL STATION
NORFOLK, VIRGINIA
NAVAL FACILITIES ENGINEERING COMMAND
ATLANTIC DIVISION
NORFOLK, VIRGINIA

SMALL CRAFT BASIN

PARTIAL PLAN

CODE ID. NO. 80091 | SIZE D
SCALE: AS NOTED
EFD NO.
STA. PROJ. NO. P–094
SPEC. NO. 05–03–3066
CONSTR. CONTR. NO.
N62470–03–B–3066
NAVFAC DRAWING NO.
4501301
SHEET 64 OF 123

S–106

DRAWFORM REVISION MAY 2000

FILENAME: 5A0960–S–106.DWG, UPDATED ON 09/23/03 AT 14:51, XREFS: MASTER, 8151–5T, 0960PROJ–INFO

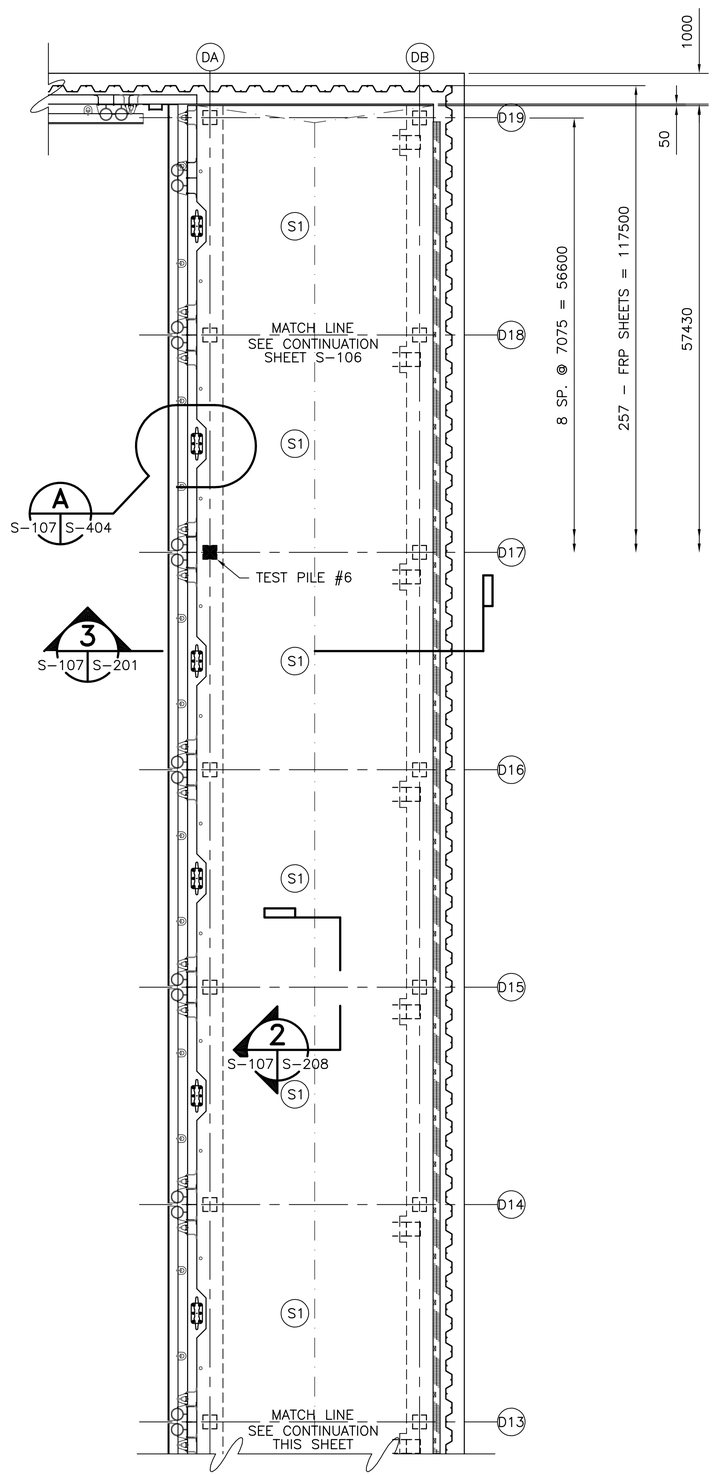

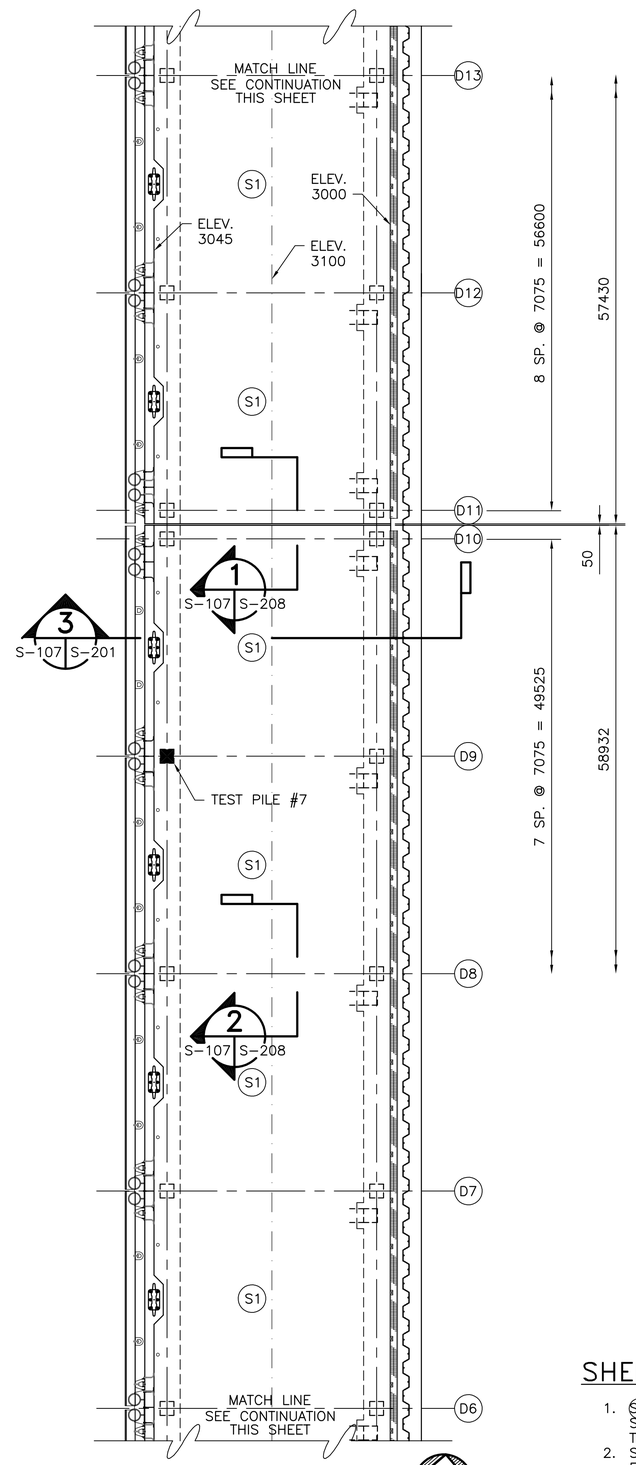

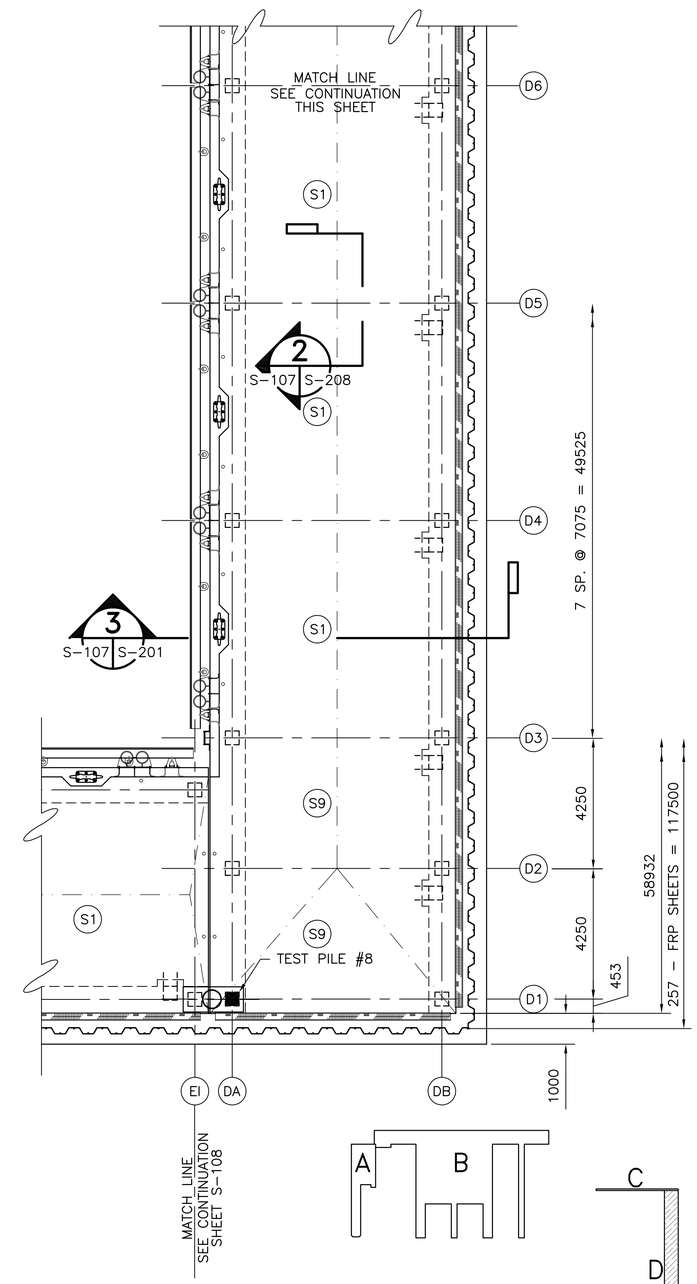

PARTIAL PLAN

1 : 100

SHEET NOTES:

1. S# DENOTES THE PRESTRESSED PRECAST SLAB TYPE. SEE SHEETS S-301 THROUGH S-303 FOR DETAILS.
2. SEE SHEETS S-401 THROUGH S-407 FOR FENDER SYSTEM DETAILS.

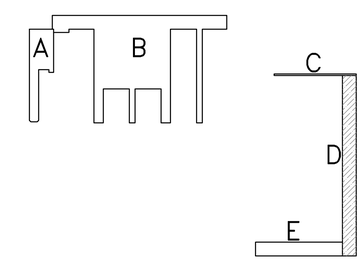

KEY PLAN

NTS

GRAPHIC SCALE

1:100 0 1 5 10m

		DATE	APPR
		DESCRIPTION	
		SYM.	

DESIGNED & ENGINEERED BY:
LANTDIV
NAVAL FACILITIES ENGINEERING COMMAND

SEAL

APPROVED

ACTIVITY – SATISFACTORY TO

DATE

APPROVED
J P Bowen
FOR EFD FOR COMMANDER NAVFAC
10/02/03

DATE

A/E	EFD
DESIGN	BAE
DRAWN	BAE
REVIEW	RCK
QC	
CHIEF ARCH./ ENGR.	
PROJECT MANAGER	KB
FIRE PROTECTION	
BRANCH MANAGER	
DESIGN DIRECTOR	

DEPARTMENT OF THE NAVY
NAVAL STATION
NAVAL STATION
NORFOLK, VIRGINIA

NAVAL FACILITIES ENGINEERING COMMAND
ATLANTIC DIVISION
NORFOLK, VIRGINIA

SMALL CRAFT BASIN

PARTIAL PLAN

CODE ID. NO. 80091	SIZE D
SCALE: AS NOTED	
EFD NO.	
STA. PROJ. NO. P-094	
SPEC. NO. 05-03-3066	
CONSTR. CONTR. NO. N62470-03-B-3066	
NAVFAC DRAWING NO. 4501302	
SHEET 65 OF 123	

S-107

DRAWFORM REVISION MAY 2000

FILENAME: 5A0960-S-107.DWG, UPDATED ON 09/23/03 AT 14:35, XREFS: MASTER, 8151-5T, 0960PROJ-INFO

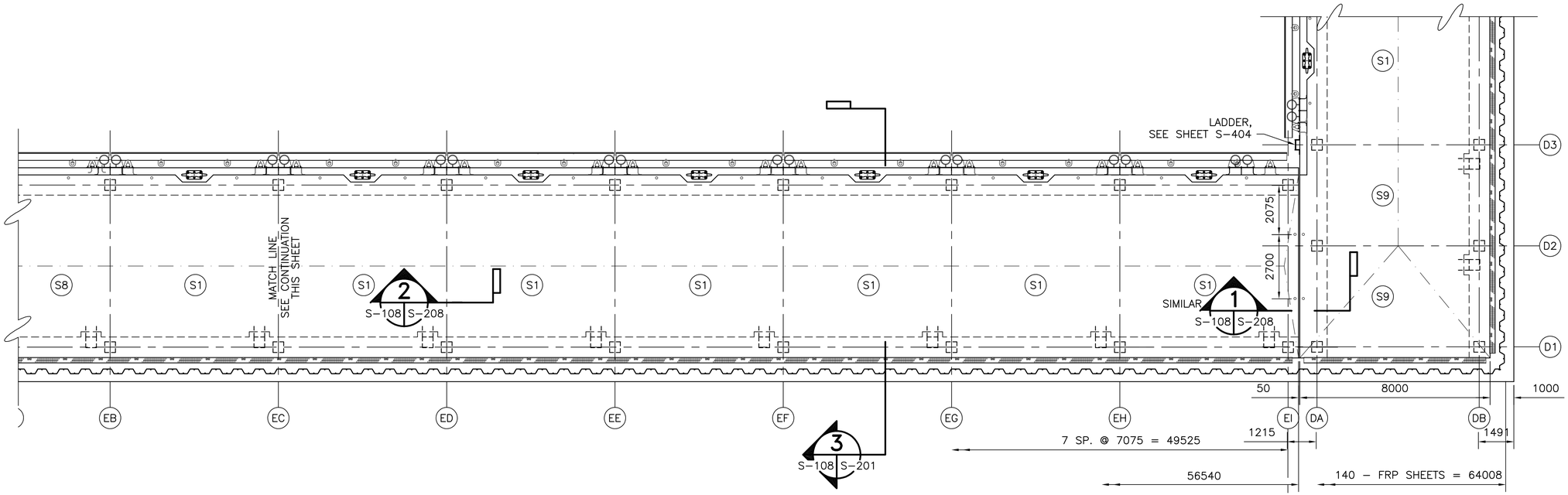

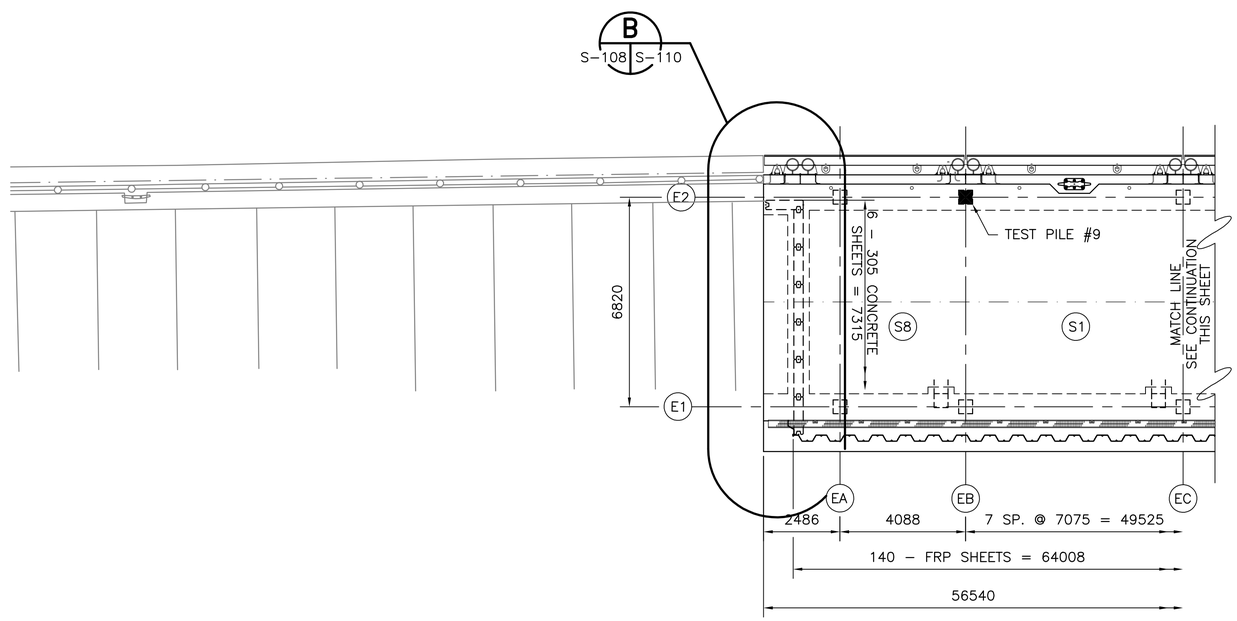

SHEET NOTES:

1. (S#) DENOTES THE PRESTRESSED PRECAST SLAB TYPE. SEE SHEETS S-301 THROUGH S-303 FOR DETAILS.
2. SEE SHEETS S-401 THROUGH S-407 FOR FENDER SYSTEM DETAILS.

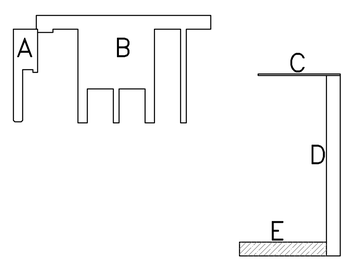

KEY PLAN
NTS

PARTIAL PLAN
1 : 100

GRAPHIC SCALE
1:100 0 1 5 10m

DESIGNED & ENGINEERED BY:
LANTDIV
NAVAL FACILITIES ENGINEERING COMMAND

SYM.	DESCRIPTION	DATE	APPR

SEAL

APPROVED
ACTIVITY – SATISFACTORY TO
DATE
APPROVED
FOR EFD FOR COMMANDER NAVFAC
10/02/03
DATE

A/E	EFD
DESIGN	BAE
DRAWN	BAE
REVIEW	RCK
QC	
CHIEF ARCH./ ENGR.	
PROJECT MANAGER	KB
FIRE PROTECTION	
BRANCH MANAGER	
DESIGN DIRECTOR	

DEPARTMENT OF THE NAVY
NAVAL FACILITIES ENGINEERING COMMAND
ATLANTIC DIVISION
NAVAL STATION NORFOLK, VIRGINIA
NAVAL STATION NORFOLK, VIRGINIA

SMALL CRAFT BASIN
PARTIAL PLAN

CODE ID. NO. 80091 | SIZE D
SCALE: AS NOTED
EFD NO.
STA. PROJ. NO. P-094
SPEC. NO. 05-03-3066
CONSTR. CONTR. NO.
N62470-03-B-3066
NAVFAC DRAWING NO.
4501303
SHEET 66 OF 123
S-108

DRAWFORM REVISION MAY 2000

FILENAME: 5A0960-S-108.DWG, UPDATED ON 09/23/03 AT 14:27, XREFS: MASTER, 8151-5T, 0960PROJ-INFO

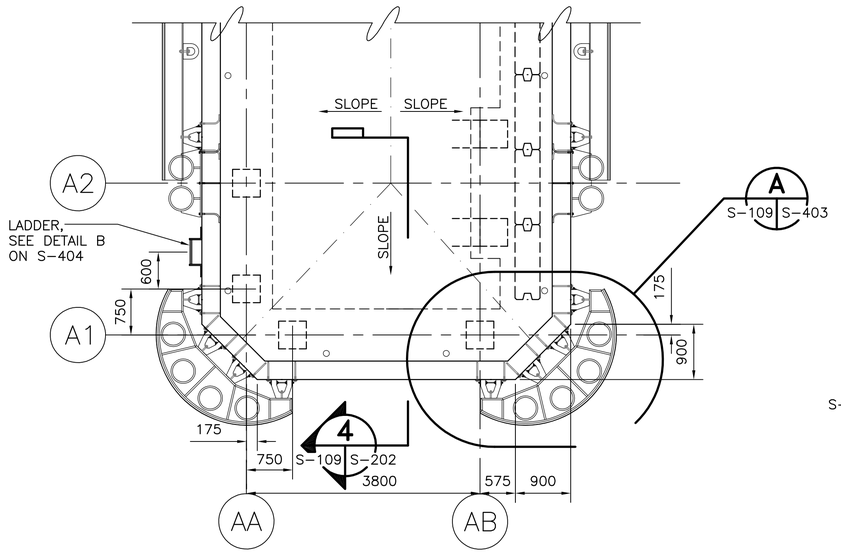

ENLARGED PLAN A
1 : 50 — S-103 | S-109

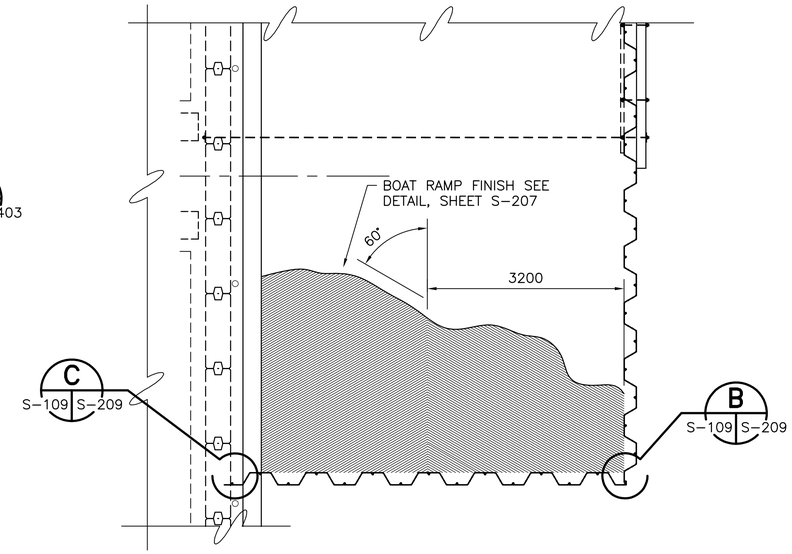

ENLARGED PLAN B
1 : 50 — S-103 | S-109

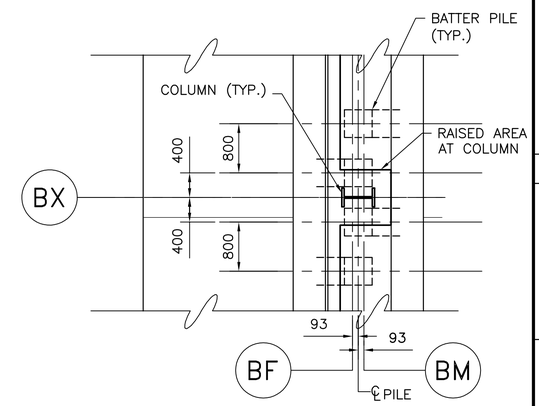

ENLARGED PLAN C
1 : 50 — S-104 | S-109

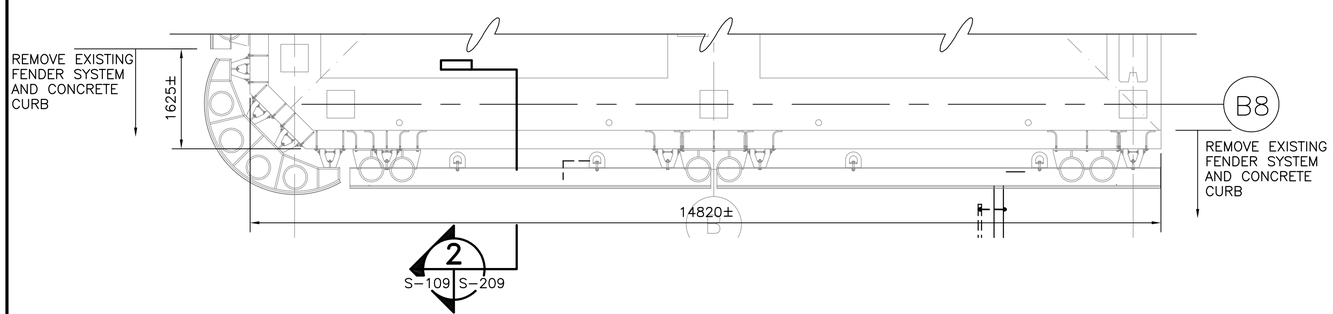

DEMOLITION NOTES:

1. SALVAGE AND REUSE COMPOSITE FENDER PILES, FENDER WELDMENTS, D-SHAPE EXTRUDED RUBBER FENDERS, LOG CAMELS, STEEL CHOCKS W/ UHMWPE FASCIA, AND TRAPEZOIDAL RUBBER FENDERS.
2. CONTRACTOR SHALL FIELD VERIFY EXISTING CONDITIONS AND INFORM THE CONTRACTING OFFICER IF DISCREPANCIES EXIST.

EXISTING CONDITION

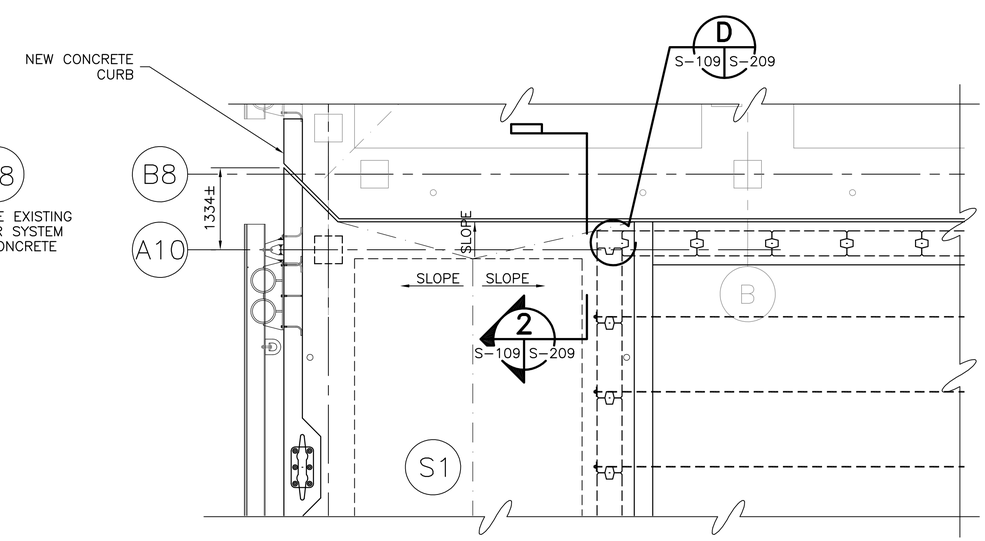

NEW CONDITION

ENLARGED PLAN D
1 : 50 — S-103 | S-109

GRAPHIC SCALES

1:50 — 0 1000 3000 5000mm

	DESIGN	BAE
	DRAWN	BAE
	REVIEW	RCK
	QC	
	CHIEF ARCH./ ENGR.	
	PROJECT MANAGER	KB
	FIRE PROTECTION	
	BRANCH MANAGER	
	DESIGN DIRECTOR	

DESIGNED & ENGINEERED BY: LANTDIV NAVAL FACILITIES ENGINEERING COMMAND

APPROVED
ACTIVITY – SATISFACTORY TO
DATE
APPROVED
FOR EFD FOR COMMANDER NAVFAC
10/02/03
DATE

NAVAL FACILITIES ENGINEERING COMMAND
ATLANTIC DIVISION
NORFOLK, VIRGINIA
DEPARTMENT OF THE NAVY
NAVAL STATION
NAVAL STATION NORFOLK, VIRGINIA
SMALL CRAFT BASIN
ENLARGED PLANS

CODE ID. NO. 80091 | SIZE D
SCALE: AS NOTED
EFD NO.
STA. PROJ. NO. P-094
SPEC. NO. 05-03-3066
CONSTR. CONTR. NO. N62470-03-B-3066
NAVFAC DRAWING NO. 4501304
SHEET 67 OF 123
S-109

DRAWFORM REVISION MAY 2000

FILENAME: 5A0960-S-109.DWG, UPDATED ON 09/23/03 AT 15:23, XREFS: MASTER, 0960PROJ-INFO

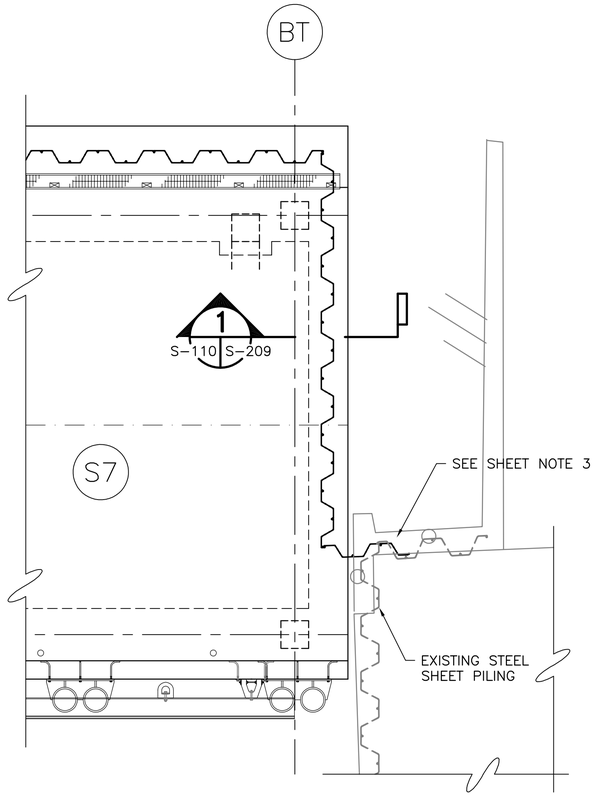

ENLARGED PLAN (A)
1 : 50
S-105 S-110

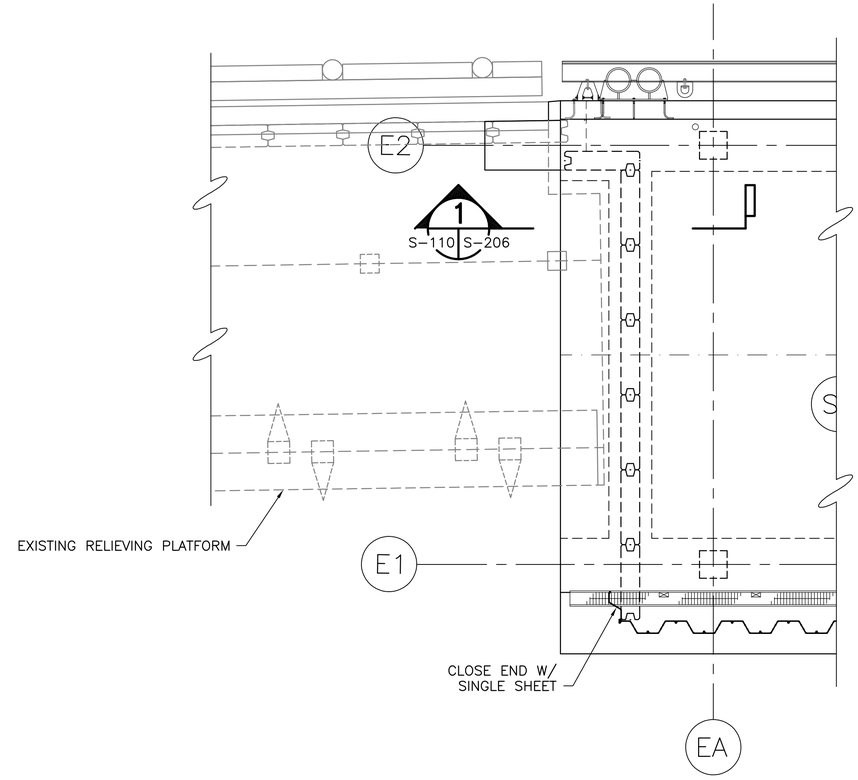

ENLARGED PLAN (B)
1 : 50
S-108 S-110

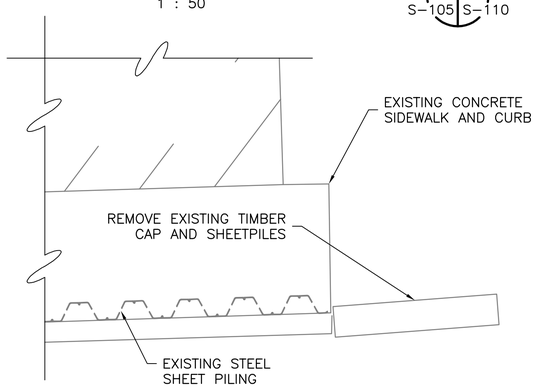

EXISTING CONDITION

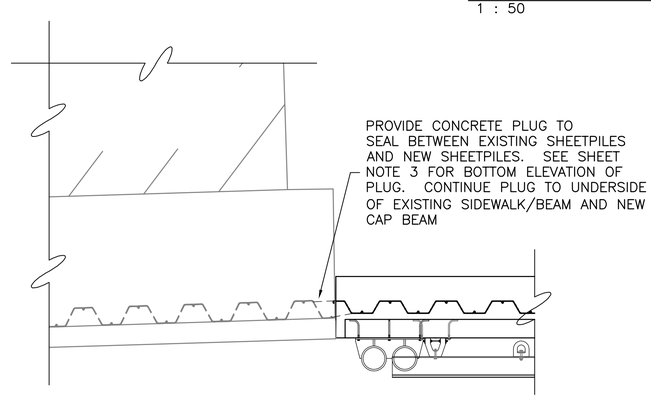

NEW CONDITION

ENLARGED PLAN (C)
1 : 50
S-106 S-110

SHEET NOTES:

1. RECORD DRAWINGS FOR THESE AREAS DO NOT EXIST. DETAILS SHOWN ARE A GENERAL INDICATION OF WORK REQUIRED. FIELD VERIFY EXISTING CONDITIONS AND COORDINATE ACTUAL CLOSURE DETAILS WITH CONTRACTING OFFICER.
2. SEE "SD" SHEETS FOR ADDITIONAL DEMOLITION INFORMATION.
3. DEMOLISH EXISTING CURB AND SLAB TO ALLOW FOR INSTALLATION OF NEW FRP SHEETS. DO NOT CUT THE EXISTING REINFORCING UNLESS PERMISSION IS OBTAINED FROM THE CONTRACTING OFFICER. REPLACE/ MATCH ANY CONCRETE REMOVED. AFTER INSTALLATION OF NEW SHEETS, IF ANY GAP EXISTS BETWEEN THE NEW AND EXISTING, TREMIE A CONCRETE PLUG TO ELEVATION -3000 TO RETAIN THE SOIL.

GRAPHIC SCALE
1:20 0 500 1000 2000mm

SYM.	DESCRIPTION	DATE	APPR

DESIGNED & ENGINEERED BY:
LANTDIV
NAVAL FACILITIES ENGINEERING COMMAND

SEAL

APPROVED
ACTIVITY - SATISFACTORY TO
DATE
APPROVED
J P Bowen
FOR EFD FOR COMMANDER NAVFAC
10/02/03
DATE

A/E		EFD
	DESIGN	BAE
	DRAWN	BAE
	REVIEW	RCK
	QC	
	CHIEF ARCH./ ENGR.	
	PROJECT MANAGER	KB
	FIRE PROTECTION	
	BRANCH MANAGER	
	DESIGN DIRECTOR	

DEPARTMENT OF THE NAVY
NAVAL FACILITIES ENGINEERING COMMAND
ATLANTIC DIVISION
NORFOLK, VIRGINIA
NAVAL STATION
NORFOLK, VIRGINIA
SMALL CRAFT BASIN
ENLARGED PLANS

CODE ID. NO. 80091 SIZE D
SCALE: AS NOTED
EFD NO.
STA. PROJ. NO. P-094
SPEC. NO. 05-03-3066
CONSTR. CONTR. NO.
N62470-03-B-3066
NAVFAC DRAWING NO.
4501305
SHEET 68 OF 123
S-110

DRAWFORM REVISION MAY 2000

FILENAME: 5A0960-S-110.DWG, UPDATED ON 09/23/03 AT 15:04, XREFS: MASTER, 0960PROJ-INFO, 8151-5T-ORIGINAL

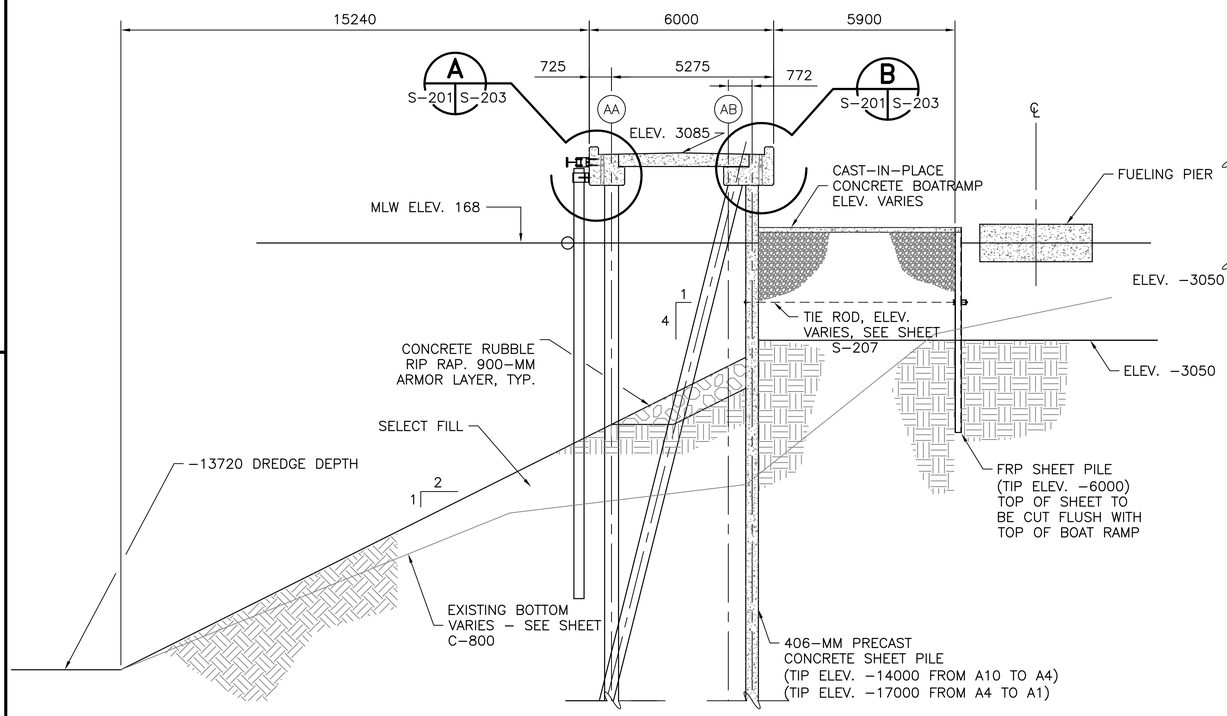

SECTION 1
1:100
S-103 S-201

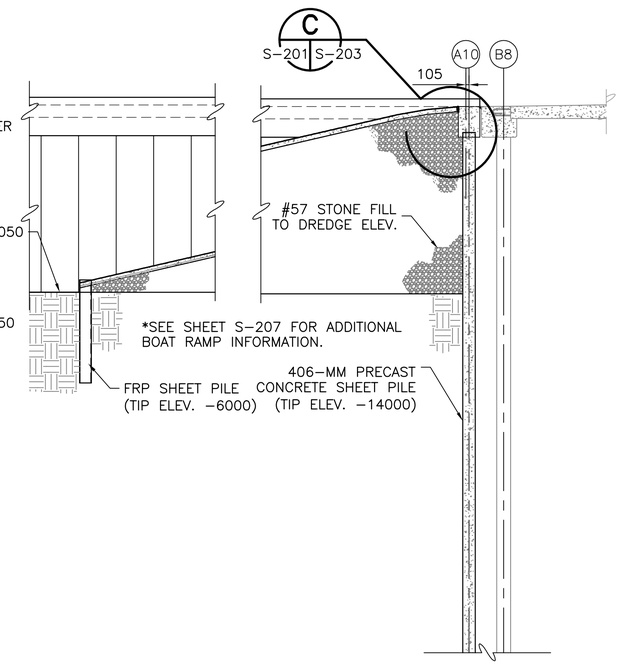

SECTION 2
1:100
S-103 S-201

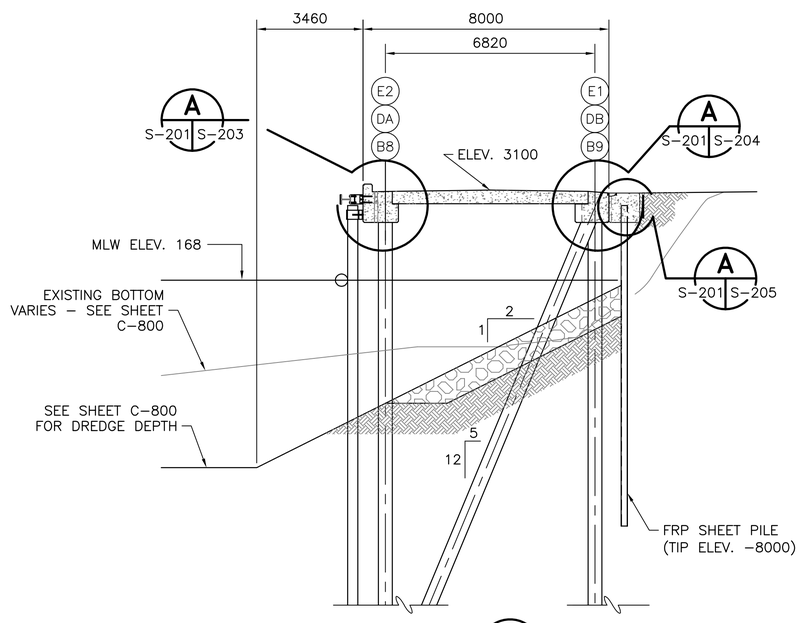

SECTION 3
1:100
S-103 S-201
S-104
S-105
S-107
S-108

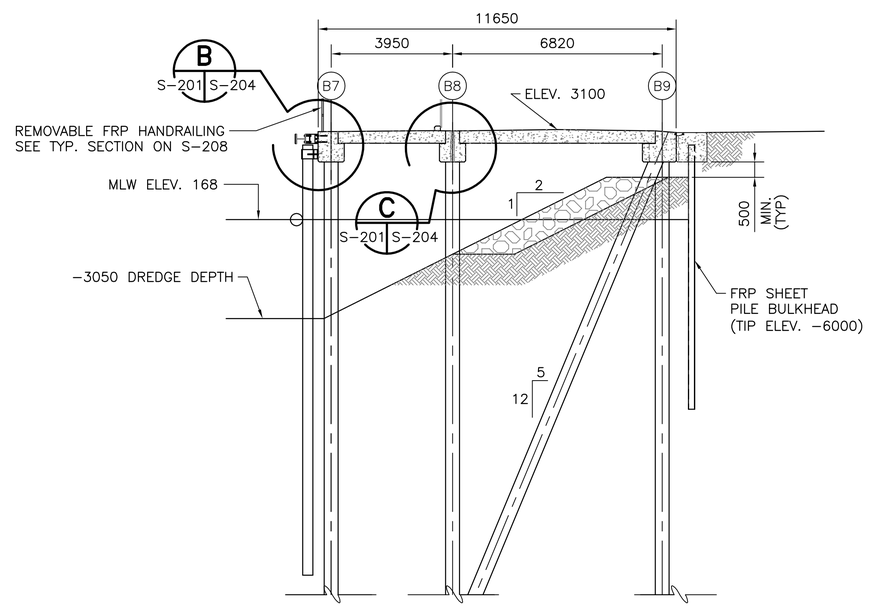

SECTION 4
1:100
S-104 S-201

SHEET NOTES:

1. SEE SHEET S-101 FOR MATERIAL AND GENERAL NOTES.
2. SEE SHEETS S-501 THROUGH S-503 FOR FLOATING PIER DETAILS
3. SEE SHEETS S-401 THROUGH S-407 FOR FENDER SYSTEM DETAILS.
4. REMOVE RIP RAP AND CONCRETE RUBBLE (UP TO 2-METER IN DIA.) AS REQUIRED TO INSTALL NEW SHEET PILE BULKHEAD AND RELIEVING PLATFORM PILES NEAR EXISTING SHORELINE. ANTICIPATE PRE-EXCAVATION TO A DEPTH OF -8000 TO REMOVE OBSTRUCTIONS.
5. EXISTING BOTTOM ELEVATIONS VARY SIGNIFICANTLY. THE SELECTED BOTTOM ELEVATIONS SHOWN IN SOME SECTIONS ARE GENERAL AND APPROXIMATE. CONTRACTOR SHALL SITE VERIFY AND COORDINATE ACTUAL BOTTOM ELEVATIONS WITH SHEET C-800.
6. STONE FILL SHALL BEAR ON FIRM SOIL. ADDITIONAL DREDGING, NOT TO EXCEED 3000, MAY BE REQUIRED. CONTRACTOR SHALL OBTAIN APPROVAL FROM THE CONTRACTING OFFICER PRIOR TO PLACING STONE FILL.

GRAPHIC SCALES

1:100 01000 5000 10000mm

SYM.	DESCRIPTION	DATE	APPR

DESIGNED & ENGINEERED BY:
LANTDIV
NAVAL FACILITIES ENGINEERING COMMAND

SEAL

APPROVED
ACTIVITY - SATISFACTORY TO
DATE
APPROVED J.P. Bowen
FOR EFD FOR COMMANDER NAVFAC 10/02/03
DATE

A/E	EFD
DESIGN	BAE
DRAWN	BAE
REVIEW	RCK
QC	
CHIEF ARCH./ ENGR.	
PROJECT MANAGER	KB
FIRE PROTECTION	
BRANCH MANAGER	
DESIGN DIRECTOR	

DEPARTMENT OF THE NAVY
NAVAL FACILITIES ENGINEERING COMMAND
ATLANTIC DIVISION
NAVAL STATION NORFOLK, VIRGINIA
NAVAL STATION NORFOLK, VIRGINIA
SMALL CRAFT BASIN
TRANSVERSE SECTIONS

CODE ID. NO. 80091 SIZE D
SCALE: AS NOTED
EFD NO.
STA. PROJ. NO. P-094
SPEC. NO. 05-03-3066
CONSTR. CONTR. NO. N62470-03-B-3066
NAVFAC DRAWING NO. 4501306
SHEET 69 OF 123
S-201

DRAWFORM REVISION SEPT 2001

FILENAME: 5A0960-S-201.DWG, UPDATED ON 09/12/03 AT 09:07, XREFS: 0960PROJ-INFO

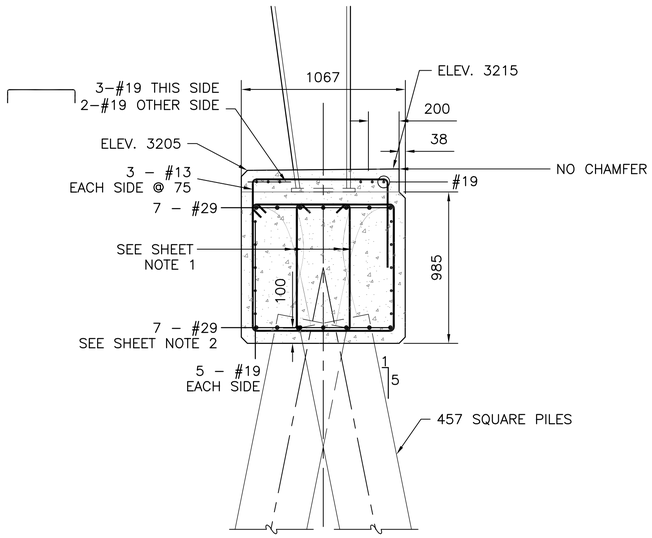

SECTION 1 (S–104 | S–202)
1:20

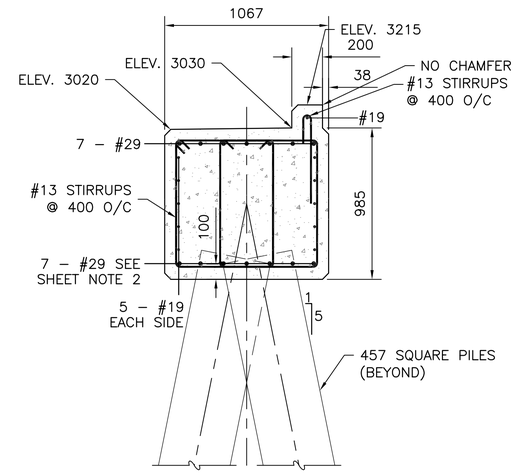

SECTION 2 (S–104 | S–202)
1:20

SHEET NOTES:

1. EXPOSE AND SPLAY 750–MM OF PILE PRESTRESSING STRANDS INTO CAP (TYP.)
2. DISCONTINUE BOTTOM BARS THAT ARE IN CONFLICT WITH PILING AT FACE OF PILING. BOTTOM BARS NOT IN CONFLICT SHALL BE RUN CONTINUOUS.

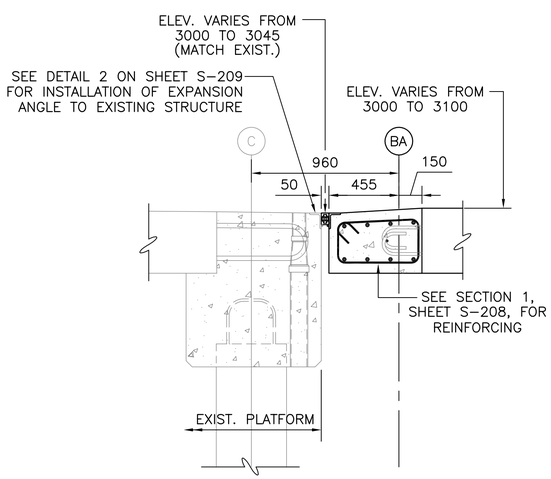

SECTION 3 (S–103 | S–202)
1:20

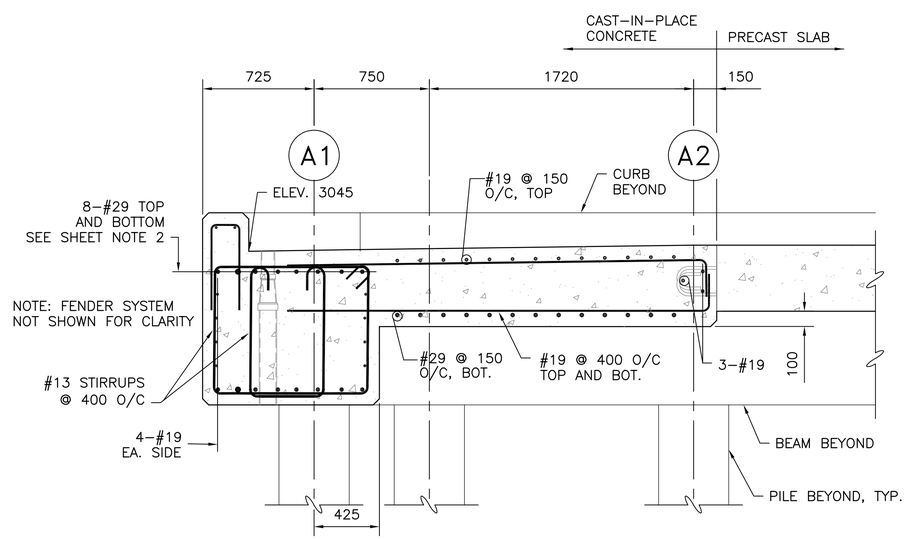

SECTION 4 (S–109 | S–202)
1:20

GRAPHIC SCALES
1:20 0 500 1000 2000mm

SYM.	DESCRIPTION	DATE	APPR

DESIGNED & ENGINEERED BY:
LANTDIV
NAVAL FACILITIES ENGINEERING COMMAND

SEAL

APPROVED
ACTIVITY – SATISFACTORY TO
DATE
APPROVED
J.P. Bowen
FOR EFD FOR COMMANDER NAVFAC
10/02/03
DATE

	A/E	EFD
DESIGN		BAE
DRAWN		ALF
REVIEW		RCK
QC		
CHIEF ARCH./ ENGR.		
PROJECT MANAGER		KB
FIRE PROTECTION		
BRANCH MANAGER		
DESIGN DIRECTOR		

DEPARTMENT OF THE NAVY
NAVAL STATION
NAVAL STATION
NORFOLK, VIRGINIA
ATLANTIC DIVISION
NAVAL FACILITIES ENGINEERING COMMAND
NORFOLK, VIRGINIA

SMALL CRAFT BASIN
SECTIONS

CODE ID. NO. 80091 | SIZE D
SCALE: AS NOTED
EFD NO.
STA. PROJ. NO. P–094
SPEC. NO. 05–03–3066
CONSTR. CONTR. NO.
N62470–03–B–3066
NAVFAC DRAWING NO.
4501307
SHEET 70 OF 123
S–202

DRAWFORM REVISION MAY 2000

FILENAME: 5A0960–S–202.DWG, UPDATED ON 09/10/03 AT 13:41, XREFS: 0960PROJ–INFO

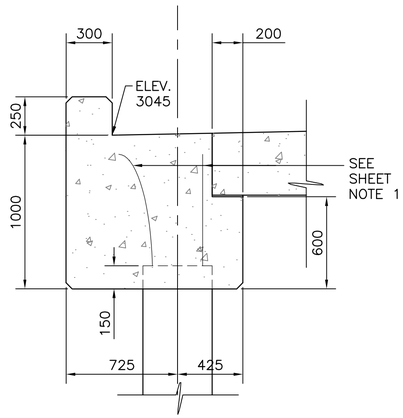

GEOMETRY

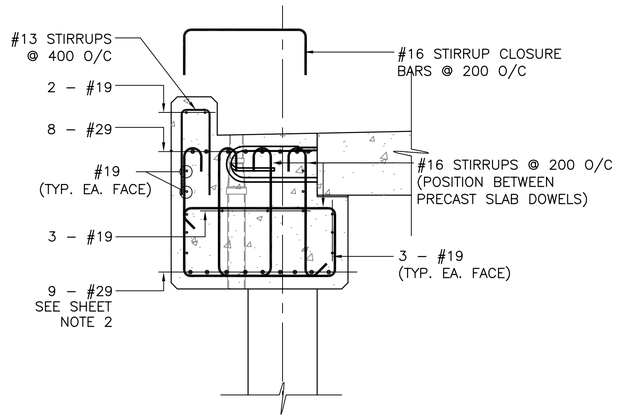

REINFORCING

DETAIL
1:20
A
S–201 S–203

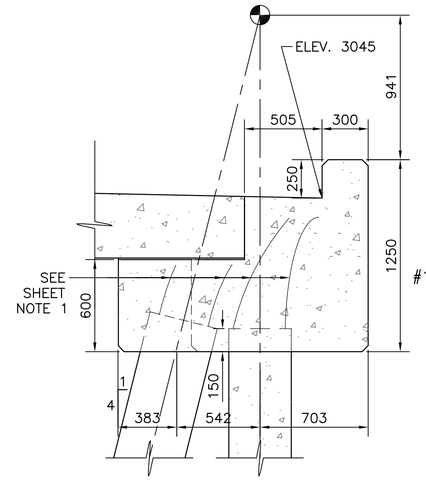

GEOMETRY

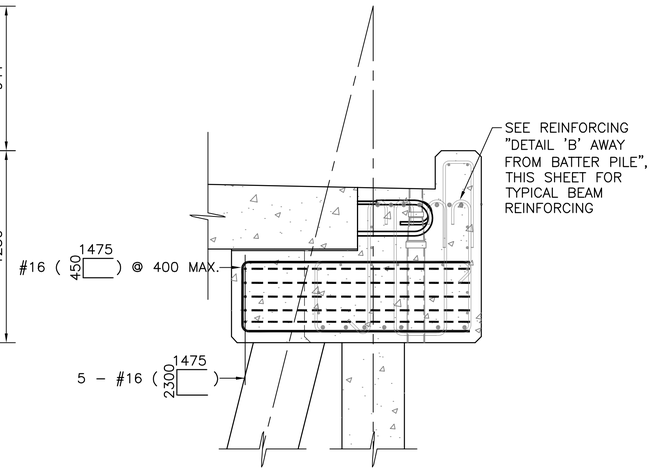

REINFORCING

DETAIL "B" AT BATTER PILE

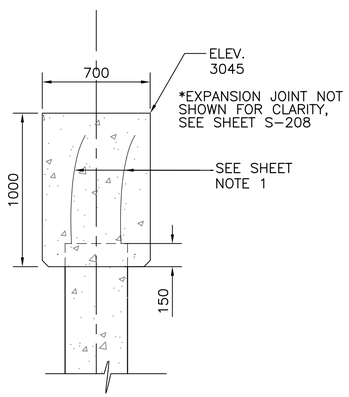

GEOMETRY

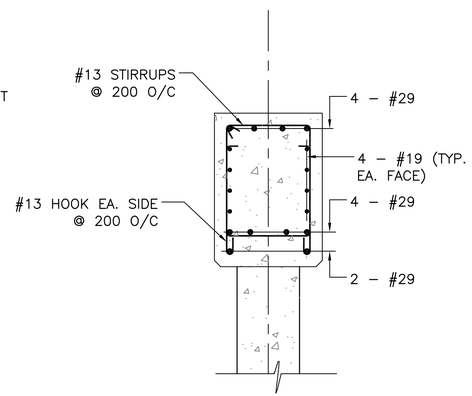

REINFORCING

DETAIL
1:20
C
S–201 S–203

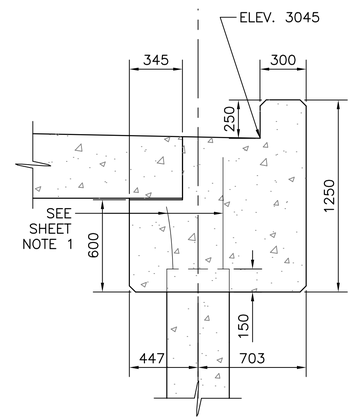

GEOMETRY

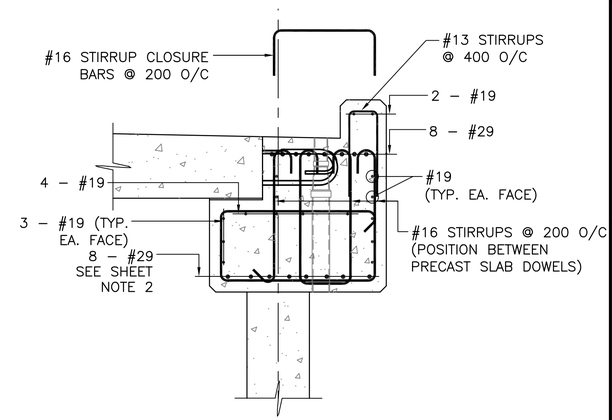

REINFORCING

DETAIL "B" AWAY FROM BATTER PILE

DETAIL
1:20
B
S–201 S–203

SHEET NOTES

1. EXPOSE AND SPLAY 750–MM OF PILE PRESTRESSING STRANDS INTO CAP (TYP.)
2. DISCONTINUE BOTTOM BARS THAT ARE IN CONFLICT WITH PILING AT FACE OF PILING. BARS NOT IN CONFLICT SHALL BE RUN CONTINUOUS.

GRAPHIC SCALES
1:20 0 500 1000 2000mm

APPR	DATE	DESCRIPTION	STM.

DESIGNED & ENGINEERED BY: LANTDIV NAVAL FACILITIES ENGINEERING COMMAND

SEAL

APPROVED
ACTIVITY – SATISFACTORY TO
DATE
APPROVED J.P. Bowen
FOR EFD FOR COMMANDER NAVFAC
10/02/03
DATE

A/E	EFD
DESIGN	BAE
DRAWN	BCD
REVIEW	RCK
QC	
CHIEF ARCH./ ENGR.	
PROJECT MANAGER	KB
FIRE PROTECTION	
BRANCH MANAGER	
DESIGN DIRECTOR	

DEPARTMENT OF THE NAVY
NAVAL FACILITIES ENGINEERING COMMAND
ATLANTIC DIVISION
NAVAL STATION
NAVAL STATION NORFOLK, VIRGINIA
NORFOLK, VIRGINIA
SMALL CRAFT BASIN
BEAM SECTIONS

CODE ID. NO. 80091 | SIZE D
SCALE:
EFD NO.
STA. PROJ. NO. P–094
SPEC. NO. 05–03–3066
CONSTR. CONTR. NO.
N62470–03–B–3066
NAVFAC DRAWING NO.
4501308
SHEET 71 OF 123
S–203

DRAWFORM REVISION SEPT 2001

FILENAME: 5A0960–S–203.DWG, UPDATED ON 09/11/03 AT 16:37, XREFS: 5A0960–S–201, 0960PROJ–INFO

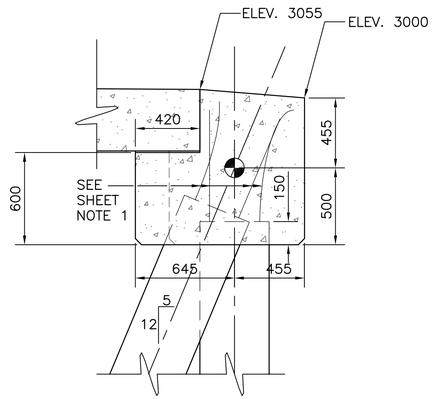

GEOMETRY

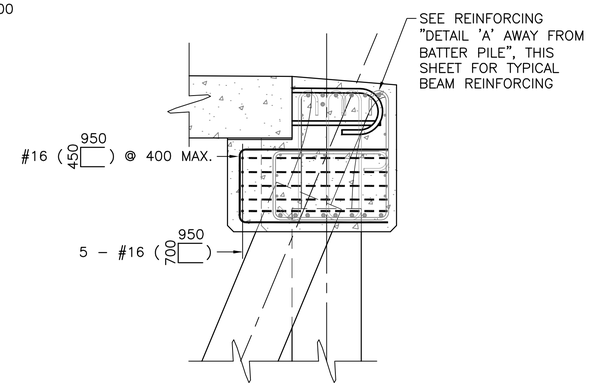

REINFORCING

DETAIL "A" AT BATTER PILE

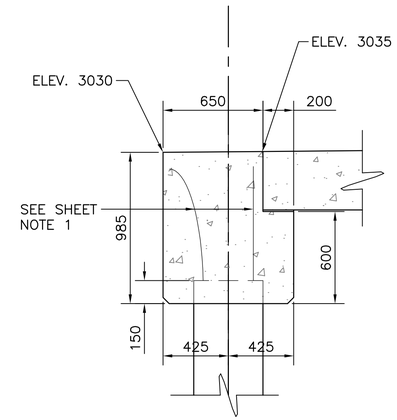

GEOMETRY

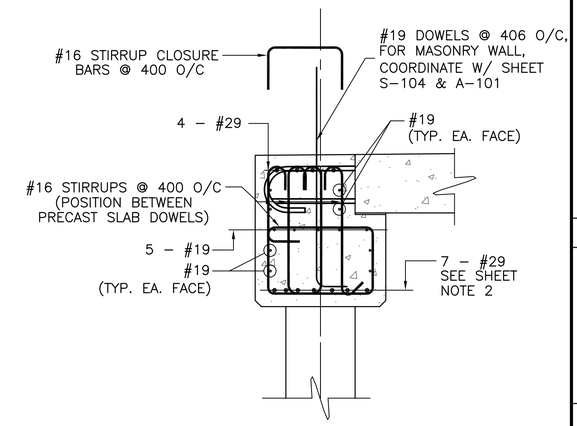

REINFORCING

DETAIL

1:20

B

S-201 S-204

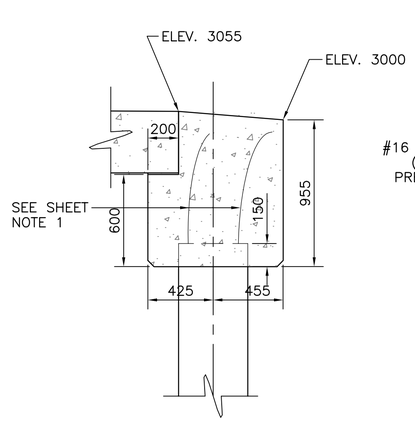

GEOMETRY

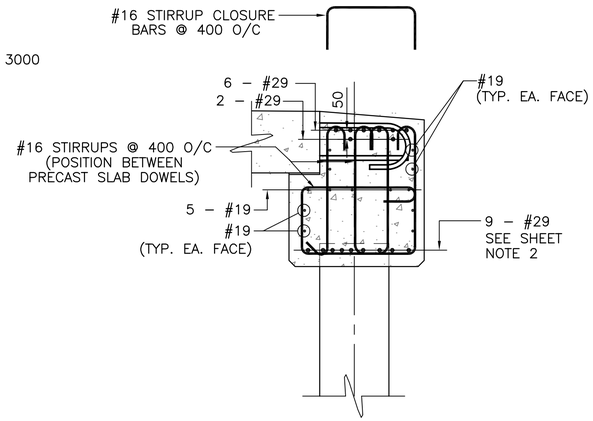

REINFORCING

DETAIL "A" AWAY FROM BATTER PILE

DETAIL

1:20

A

S-201 S-204

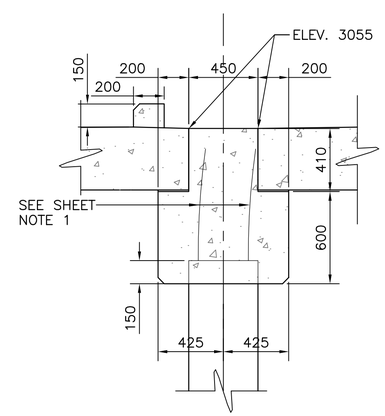

GEOMETRY

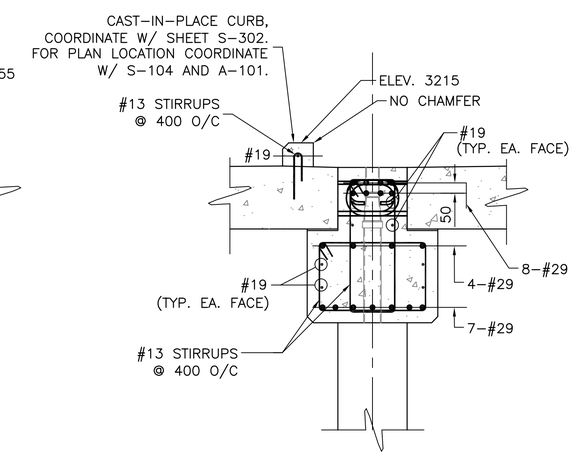

REINFORCING

DETAIL

1:20

C

S-201 S-204

SHEET NOTES:

1. EXPOSE AND SPLAY 750-MM OF PILE PRESTRESSING STRANDS INTO CAP (TYP.)
2. DISCONTINUE BOTTOM BARS THAT ARE IN CONFLICT WITH PILING AT FACE OF PILING. BOTTOM BARS NOT IN CONFLICT SHALL BE RUN CONTINUOUS.

GRAPHIC SCALES

1:20 0 500 1000 2000mm

DATE	DESCRIPTION	STM.	APPR.

DESIGNED & ENGINEERED BY: LANTDIV NAVAL FACILITIES ENGINEERING COMMAND

SEAL

APPROVED

ACTIVITY – SATISFACTORY TO

DATE

APPROVED J.P. Bowen FOR EFD FOR COMMANDER NAVFAC 10/02/03

DATE

A/E	EFD
DESIGN	BAE
DRAWN	ALF
REVIEW	RCK
QC	
CHIEF ARCH./ ENGR.	
PROJECT MANAGER	KB
FIRE PROTECTION	
BRANCH MANAGER	
DESIGN DIRECTOR	

DEPARTMENT OF THE NAVY
NAVAL FACILITIES ENGINEERING COMMAND
ATLANTIC DIVISION
NAVAL STATION NORFOLK, VIRGINIA
NAVAL STATION NORFOLK, VIRGINIA

SMALL CRAFT BASIN

SECTIONS

CODE ID. NO. 80091 | SIZE D

SCALE:

EFD NO.

STA. PROJ. NO. P-094

SPEC. NO. 05-03-3066

CONSTR. CONTR. NO. N62470-03-B-3066

NAVFAC DRAWING NO. 4501309

SHEET 72 OF 123

S-204

DRAWFORM REVISION SEPT 2001

FILENAME: 5A0960-S-204.DWG, UPDATED ON 09/10/03 AT 13:48, XREFS: 5A0960-S-201, 0960PROJ-INFO

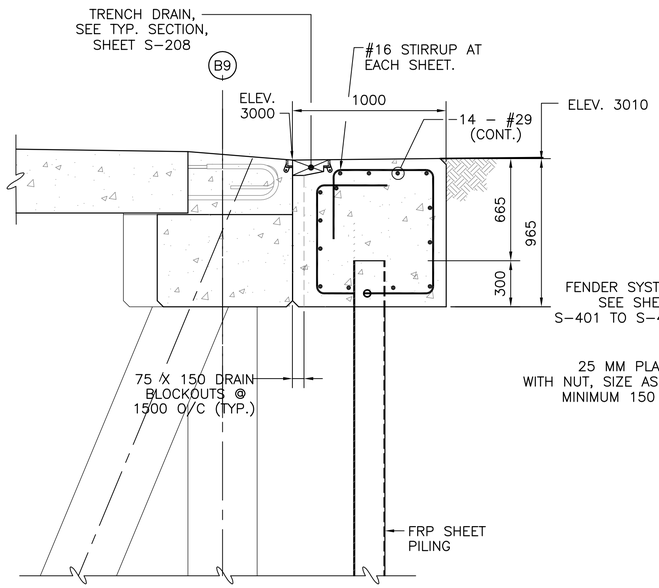

DETAIL A

1 : 20

S-201 | S-205

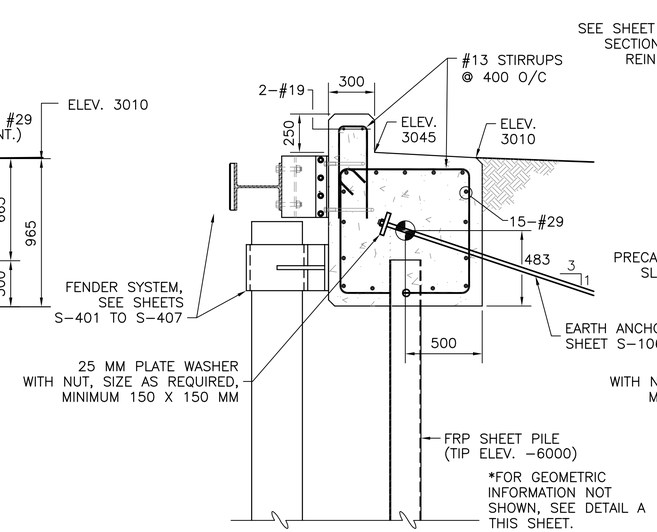

SECTION 1

1 : 20

S-106 | S-205

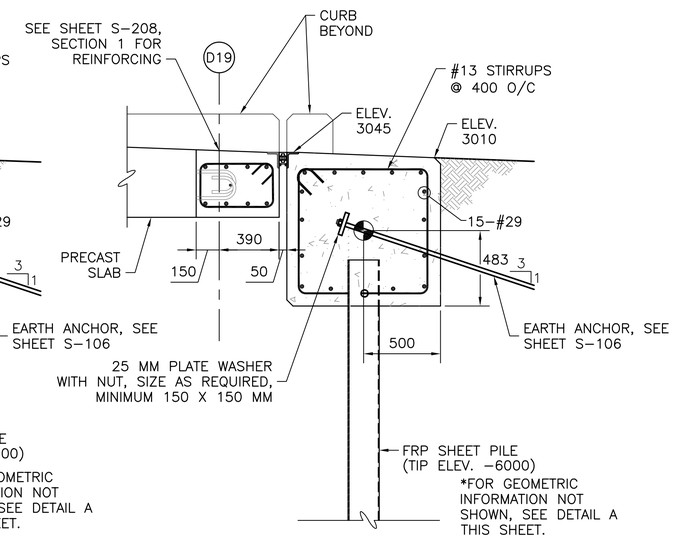

SECTION 2

1 : 20

S-106 | S-205

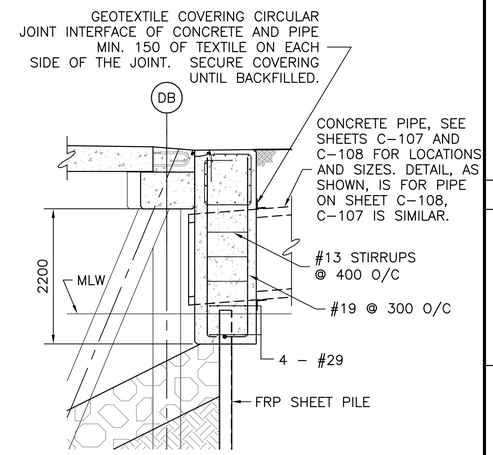

BULKHEAD PENETRATION DETAIL AT 1200-MMø STORM DRAIN

1 : 50

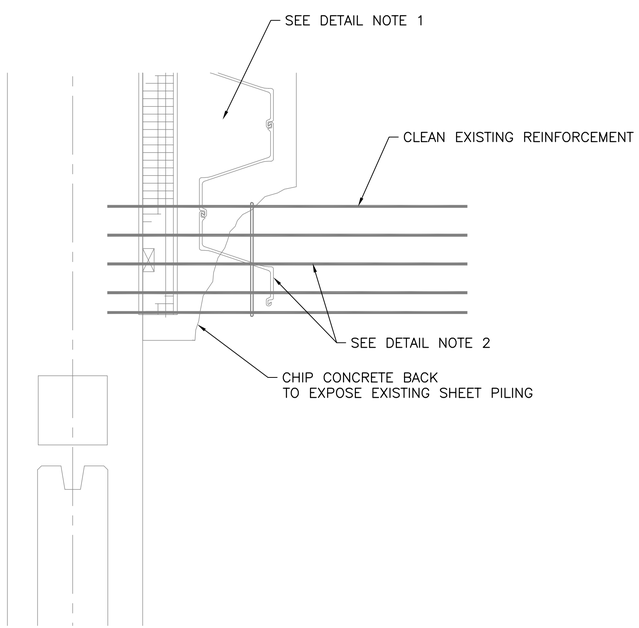

EXISTING

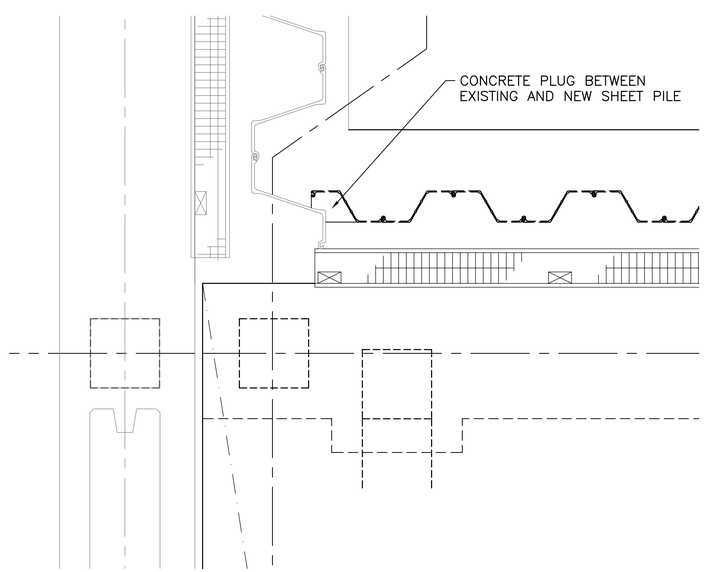

NEW

EXISTING / NEW BULKHEAD JUNCTURE DETAIL B

1 : 20

S-103 | S-205

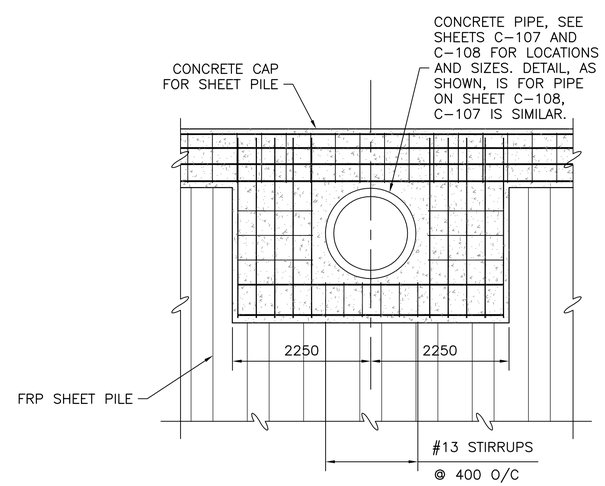

BULKHEAD PENETRATION ELEVATION AT 1200-MMø STORM DRAIN

1 : 50

DETAIL NOTE:

1. RECORD DRAWINGS FOR THESE AREAS DO NOT EXIST. DETAILS SHOWN ARE A GENERAL INDICATION OF WORK REQUIRED. FIELD VERIFY EXISTING CONDITIONS AND COORDINATE ACTUAL CLOSURE DETAILS WITH CONTRACTING OFFICER.
2. DO NOT DAMAGE EXISTING EXISTING SHEET PILING OR REINFORCEMENT DURING CONCRETE REMOVAL.

GRAPHIC SCALES

1:20 — 0, 500, 1000, 2000mm

1:50 — 0, 1000, 3000, 5000mm

APPR	DATE	DESCRIPTION	STM.

DESIGNED & ENGINEERED BY: LANTDIV NAVAL FACILITIES ENGINEERING COMMAND

SEAL

APPROVED

ACTIVITY – SATISFACTORY TO

DATE

APPROVED J.P. Bowen

FOR EFD FOR COMMANDER NAVFAC 10/02/03

DATE

A/E	EFD
DESIGN	BAE
DRAWN	BAE
REVIEW	RCK
QC	
CHIEF ARCH./ ENGR.	
PROJECT MANAGER	KB
FIRE PROTECTION	
BRANCH MANAGER	
DESIGN DIRECTOR	

DEPARTMENT OF THE NAVY — NAVAL FACILITIES ENGINEERING COMMAND — ATLANTIC DIVISION — NORFOLK, VIRGINIA

NAVAL STATION — NAVAL STATION — NORFOLK, VIRGINIA

SMALL CRAFT BASIN

BULKHEAD DETAILS / SECTIONS

CODE ID. NO. 80091 | SIZE D

SCALE: AS NOTED

EFD NO.

STA. PROJ. NO. P-094

SPEC. NO. 05-03-3066

CONSTR. CONTR. NO. N62470-03-B-3066

NAVFAC DRAWING NO. 4501310

SHEET 73 OF 123

S-205

DRAWFORM REVISION SEPT 2001

FILENAME: 5A0960-S-205.DWG, UPDATED ON 09/10/03 AT 14:01, XREFS: 0960PROJ-INFO, MASTER

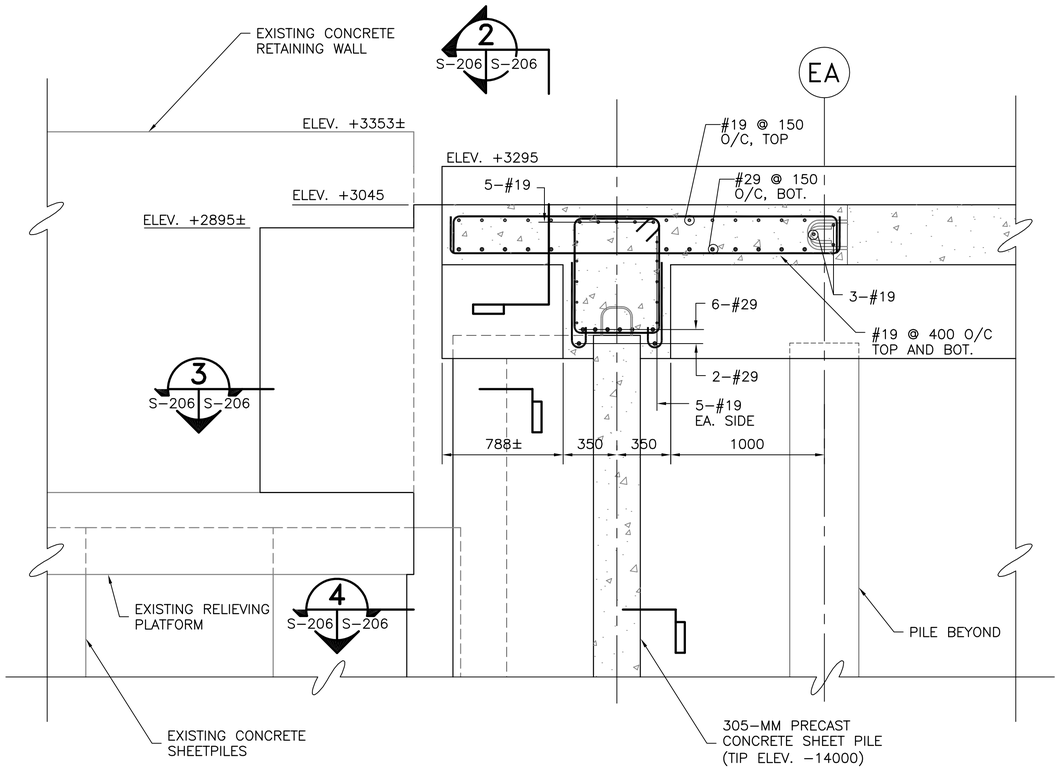

SECTION AT EXISTING SOUTH BULKHEAD

1:20 — 1 — S-110 S-206

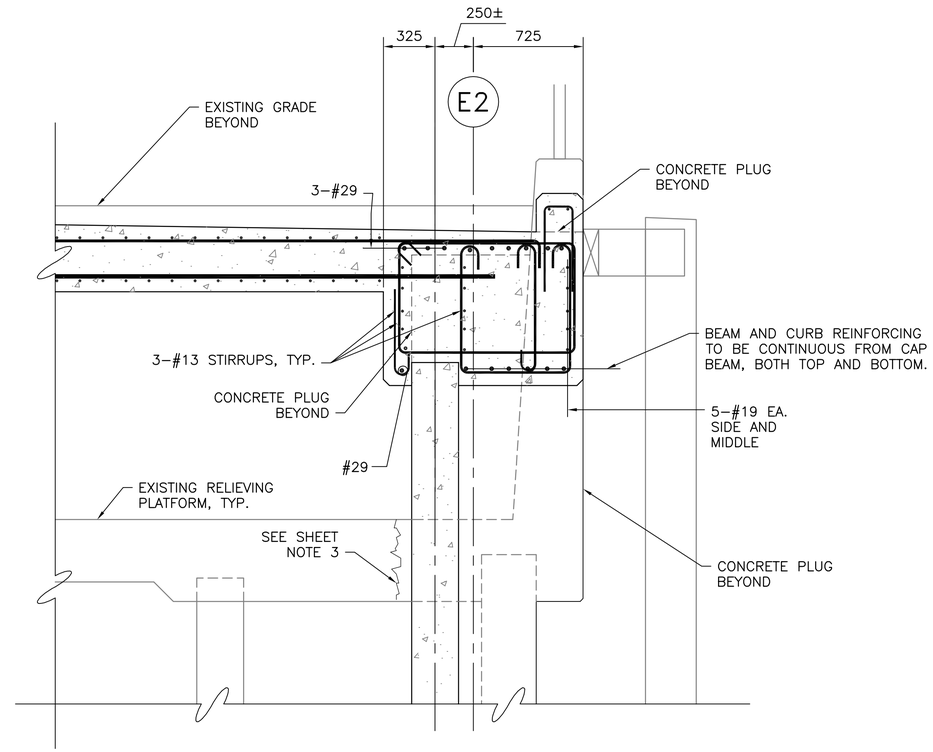

SECTION

1:20 — 2 — S-206 S-206

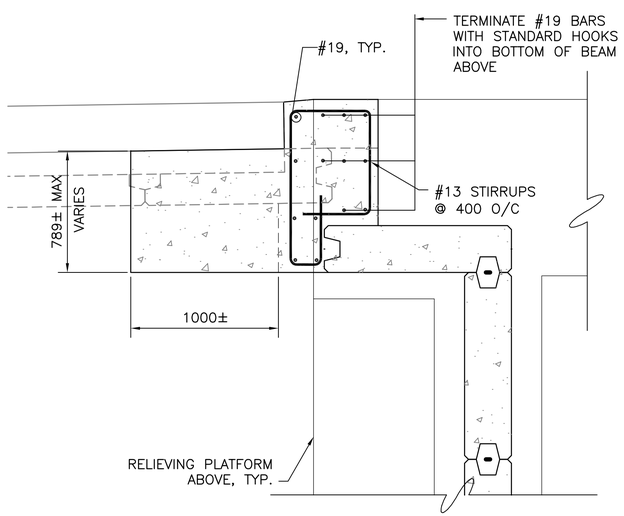

SECTION

1:20 — 3 — S-206 S-206

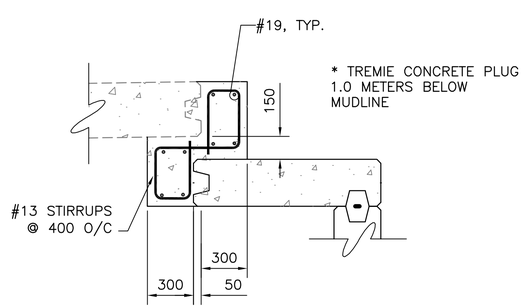

SECTION

1:20 — 4 — S-206 S-206

SHEET NOTES:

1. SEE SHEET SD-102 AND SD-112 FOR LIMITS OF DEMOLITION
2. RECORD DRAWINGS FOR THESE AREAS DO NOT EXIST. DETAILS SHOWN ARE A GENERAL INDICATION OF WORK REQUIRED. FIELD VERIFY EXISTING CONDITIONS AND COORDINATE ACTUAL CLOSURE COORDINATE ACTUAL CLOSURE DETAILS WITH CONTRACTING OFFICER.
3. DEMOLISH ENOUGH AREA OF EXISTING RELIEVING PLATFORM TO ALLOW INSTALLATION OF NEW CONCRETE SHEET PILES AND CONCRETE PLUG.

GRAPHIC SCALES

1:20 — 0 500 1000 2000mm

SYM.	DESCRIPTION	DATE	APPR

DESIGNED & ENGINEERED BY: LANTDIV NAVAL FACILITIES ENGINEERING COMMAND

SEAL

APPROVED

ACTIVITY – SATISFACTORY TO

DATE

APPROVED J.P. Bowen FOR EFD FOR COMMANDER NAVFAC 10/02/03

DATE

A/E	EFD
DESIGN	BAE
DRAWN	BAE
REVIEW	RCK
QC	
CHIEF ARCH./ ENGR.	
PROJECT MANAGER	KB
FIRE PROTECTION	
BRANCH MANAGER	
DESIGN DIRECTOR	

DEPARTMENT OF THE NAVY — NAVAL FACILITIES ENGINEERING COMMAND — ATLANTIC DIVISION

NAVAL STATION — NORFOLK, VIRGINIA

NAVAL STATION — NORFOLK, VIRGINIA

SMALL CRAFT BASIN

SECTIONS AT EXISTING SOUTH BULKHEAD

CODE ID. NO. 80091 | SIZE D

SCALE: AS NOTED

EFD NO.

STA. PROJ. NO. P-094

SPEC. NO. 05-03-3066

CONSTR. CONTR. NO. N62470-03-B-3066

NAVFAC DRAWING NO. 4501311

SHEET 74 OF 123

S-206

DRAWFORM REVISION MAY 2000

FILENAME: 5A0960-S-206.DWG, UPDATED ON 09/05/03 AT 08:55, XREFS: 0960PROJ-INFO

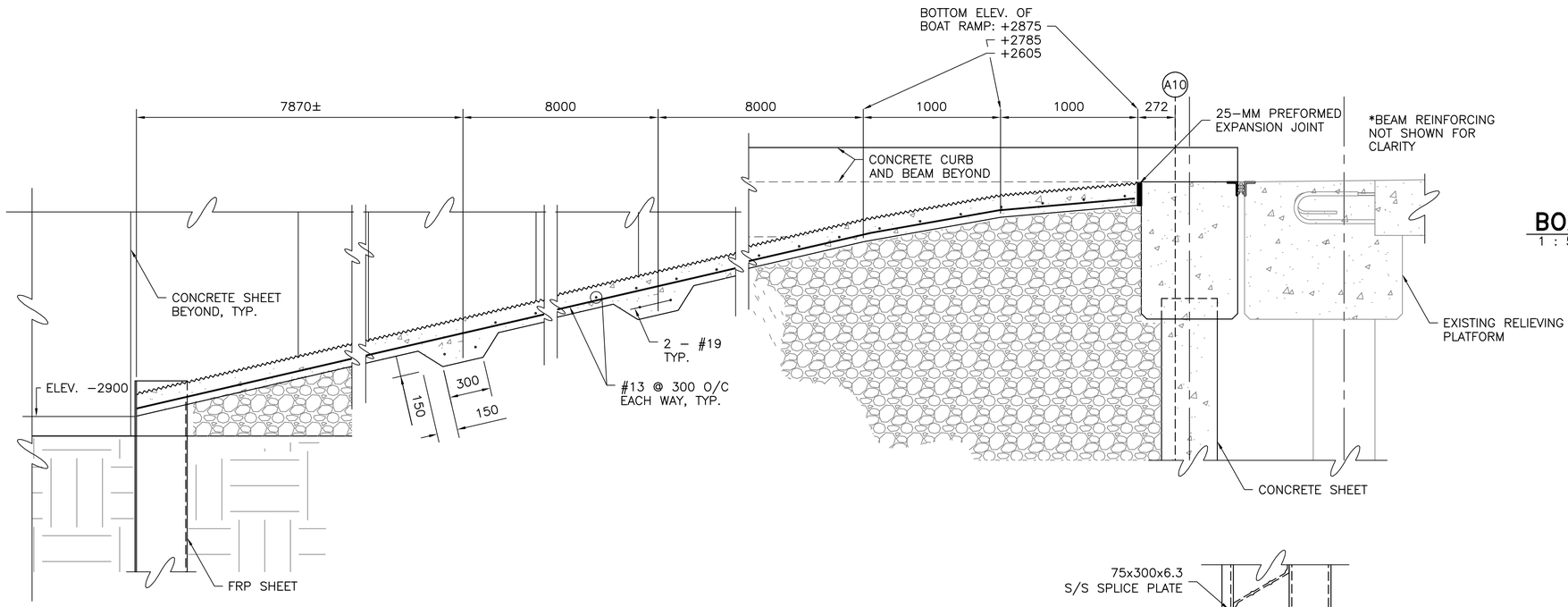

BOAT RAMP DETAIL
1:20

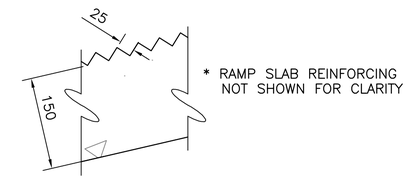

BOAT RAMP FINISH DETAIL
1 : 5

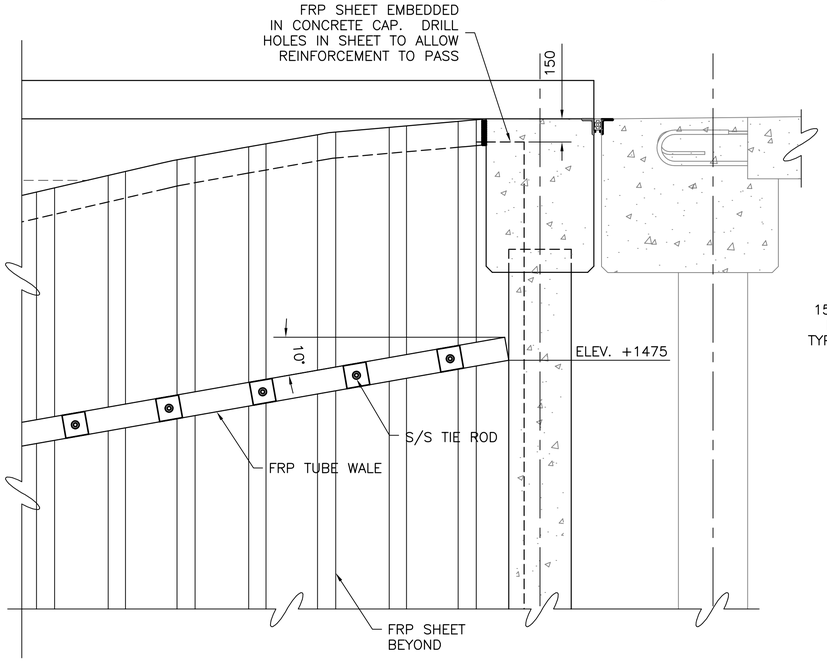

TIE-BACK WALE ELEVATION
1:20

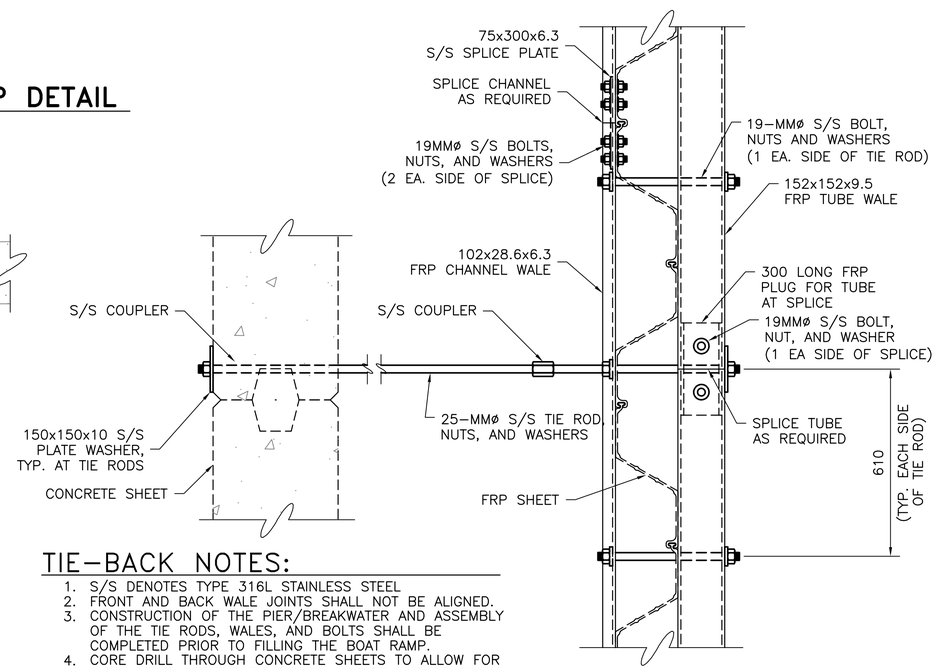

TIE-BACK PARTIAL PLAN
1:10

TIE-BACK NOTES:

1. S/S DENOTES TYPE 316L STAINLESS STEEL
2. FRONT AND BACK WALE JOINTS SHALL NOT BE ALIGNED.
3. CONSTRUCTION OF THE PIER/BREAKWATER AND ASSEMBLY OF THE TIE RODS, WALES, AND BOLTS SHALL BE COMPLETED PRIOR TO FILLING THE BOAT RAMP.
4. CORE DRILL THROUGH CONCRETE SHEETS TO ALLOW FOR INSTALLATION OF THE TIE RODS. LOCATE THE TIE ROD AT/NEAR THE CONCRETE SHEET JOINT. DO NOT CUT ANY REINFORCING STEEL IN THE CONCRETE SHEET. GROUT HOLE SOLID AFTER TIE ROD IS INSTALLED.

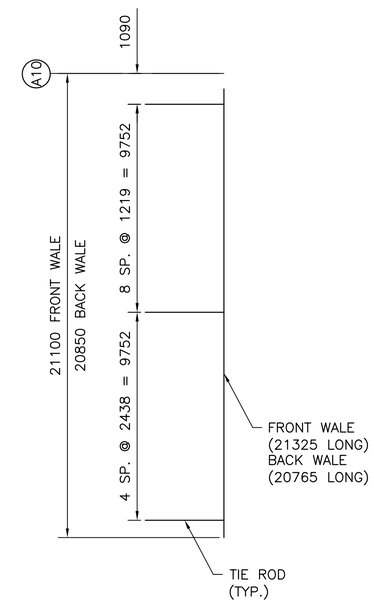

TIE-BACK OVERALL PLAN – LOCATION OF TIE RODS AND WALES
NTS

GRAPHIC SCALES

1:5 — 0 100 300 500mm

1:10 — 0 100 500 1000mm

1:20 — 0 500 1000 2000mm

			APPR
			DATE
			DESCRIPTION
			STM.

DESIGNED & ENGINEERED BY: LANTDIV NAVAL FACILITIES ENGINEERING COMMAND

SEAL

APPROVED

ACTIVITY – SATISFACTORY TO

DATE

APPROVED J.P. Bowen FOR EFD FOR COMMANDER NAVFAC 10/02/03

DATE

A/E	EFD
DESIGN	BAE
DRAWN	BAE
REVIEW	RCK
QC	
CHIEF ARCH./ ENGR.	
PROJECT MANAGER	KB
FIRE PROTECTION	
BRANCH MANAGER	
DESIGN DIRECTOR	

DEPARTMENT OF THE NAVY — NAVAL FACILITIES ENGINEERING COMMAND — ATLANTIC DIVISION — NORFOLK, VIRGINIA

NAVAL STATION — NAVAL STATION — NORFOLK, VIRGINIA

SMALL CRAFT BASIN

SECTIONS AND DETAILS

CODE ID. NO. 80091 | SIZE D

SCALE: AS NOTED

EFD NO.

STA. PROJ. NO. P-094

SPEC. NO. 05-03-3066

CONSTR. CONTR. NO. N62470-03-B-3066

NAVFAC DRAWING NO. 4501312

SHEET 75 OF 123

S-207

DRAWFORM REVISION MAY 2000

FILENAME: 5A0960-S-207.DWG, UPDATED ON 09/08/03 AT 15:20, XREFS: 0960PROJ-INFO

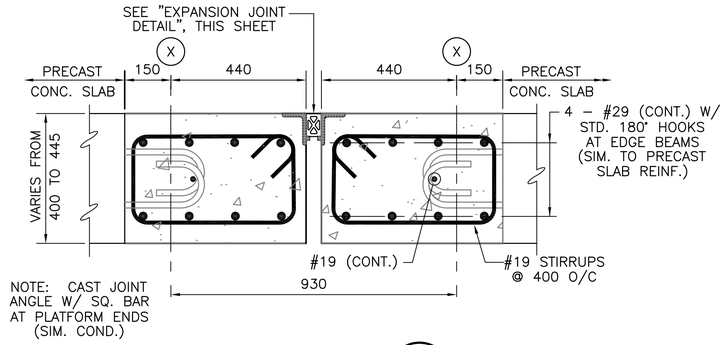

SECTION 1
1:10

S-104 S-208
S-107
S-108

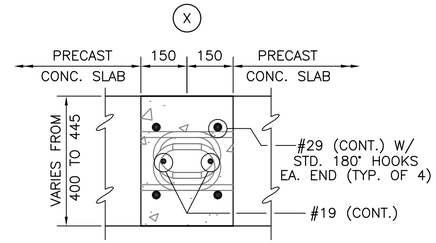

SECTION 2
1:10

S-103 S-208
S-104
S-105
S-107
S-108

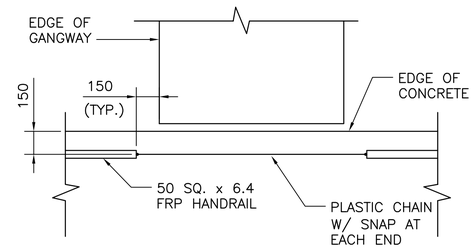

REMOVABLE HANDRAIL AT GANGWAY
NOT TO SCALE

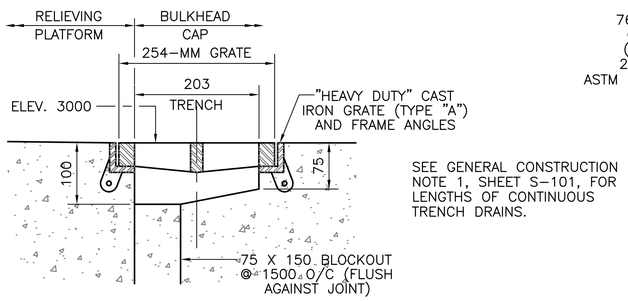

SEE GENERAL CONSTRUCTION NOTE 1, SHEET S-101, FOR LENGTHS OF CONTINUOUS TRENCH DRAINS.

TYP. SECTION – CONT. TRENCH DRAIN
1:5

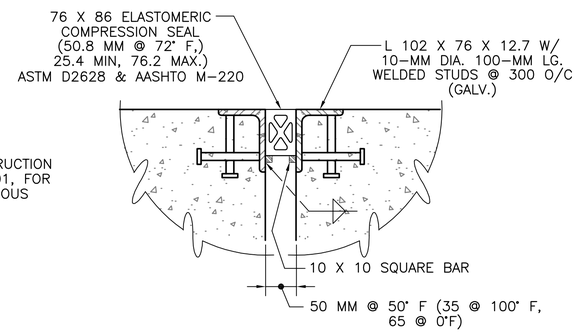

EXPANSION JOINT DETAIL
1:5

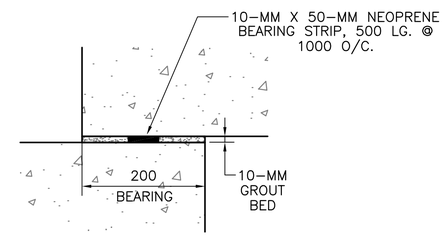

PRECAST SLAB BEARING DETAIL
NOT TO SCALE

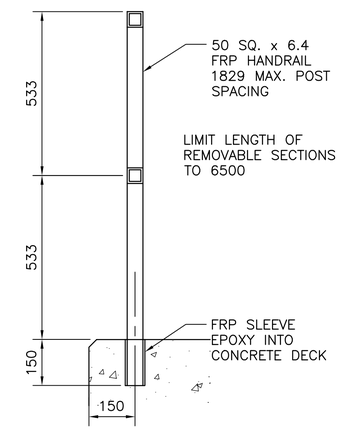

TYPICAL SECTION REMOVABLE HANDRAIL
1:10

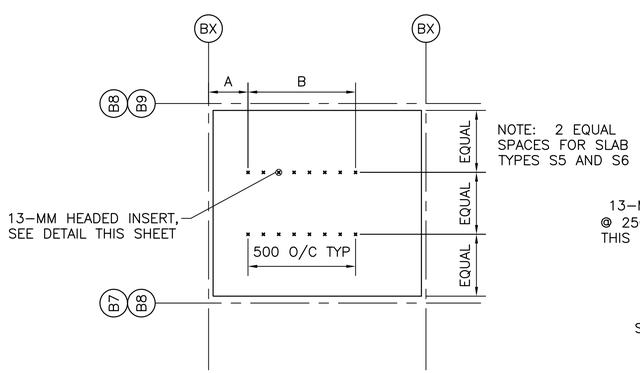

SLAB INSERT DETAIL
NOT TO SCALE

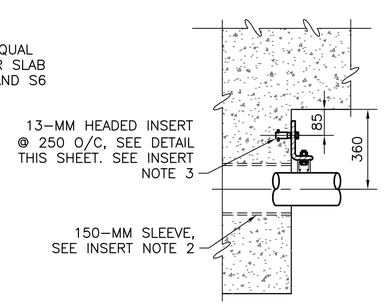

BEAM INSERT DETAIL
NOT TO SCALE

INSERT NOTES:

1. SEE SHEET E-702 FOR ADDITIONAL CONDUIT DETAILS.
2. COORDINATE REQUIRED NUMBER OF BEAM SLEEVES WITH MECHANICAL AND ELECTRICAL REQUIREMENTS.
3. PROVIDE INSERTS ON BOTH SIDES OF THE BEAMS ON COLUMN LINES B7 AND B8. PROVIDE ON SOUTH FACE BEAM ON COLUMN LINE B9. SEE "SECTION VIEW AT GANGWAYS" ON SHEET E-702 FOR ADDITIONAL INFORMATION.

SLAB TYPE	BENT	A	B
S2	BB TO BC	400	5150
S2	BD TO BE	4300	2000
S3 & S5	BF TO BG	1450	2250
S4	BI TO BJ	650	5400
S6	BI TO BJ	2550	3500
S3 & S5	BL TO BM	650	2900
S7	BN TO BO	1650	1400
S7	BQ TO BR	900	3200

INSERT SCHEDULE
NOT TO SCALE

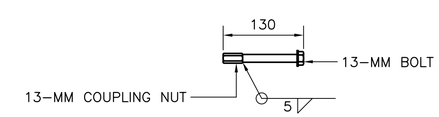

13-MM HEADED INSERT DETAIL
SCALE: 1:5

PROVIDE AND INSTALL PLASTIC THREAD SAVERS FOR ALL THREADED INSERTS

GRAPHIC SCALES

1:5 0 100 300 500mm

1:10 0 100 500 1000mm

DESIGNED & ENGINEERED BY: LANTDIV NAVAL FACILITIES ENGINEERING COMMAND

APPROVED

ACTIVITY – SATISFACTORY TO

DATE

APPROVED J.P. Bowen FOR EFD FOR COMMANDER NAVFAC 10/02/03

DATE

A/E	EFD
DESIGN	BAE
DRAWN	BAE
REVIEW	RCK
QC	
CHIEF ARCH./ ENGR.	
PROJECT MANAGER	KB
FIRE PROTECTION	
BRANCH MANAGER	
DESIGN DIRECTOR	

DEPARTMENT OF THE NAVY
NAVAL FACILITIES ENGINEERING COMMAND
ATLANTIC DIVISION
NAVAL STATION NORFOLK, VIRGINIA
NAVAL STATION NORFOLK, VIRGINIA
SMALL CRAFT BASIN
SECTIONS AND DETAILS

CODE ID. NO. 80091 SIZE D
SCALE: AS NOTED
EFD NO.
STA. PROJ. NO. P-094
SPEC. NO. 05-03-3066
CONSTR. CONTR. NO. N62470-03-B-3066
NAVFAC DRAWING NO. 4501313
SHEET 76 OF 123
S-208

DRAWFORM REVISION SEPT 2001

FILENAME: 5A0960-S-208.DWG, UPDATED ON 09/12/03 AT 11:09, XREFS: 0960PROJ-INFO

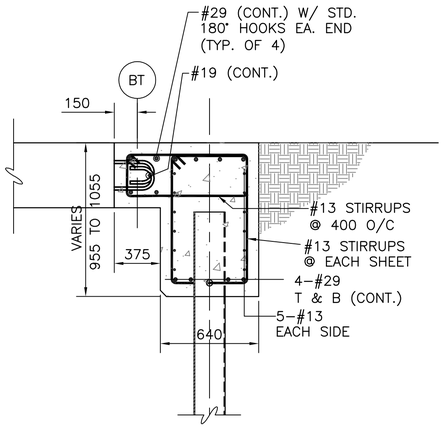

DETAIL 1 S–110 | S–209
1:20

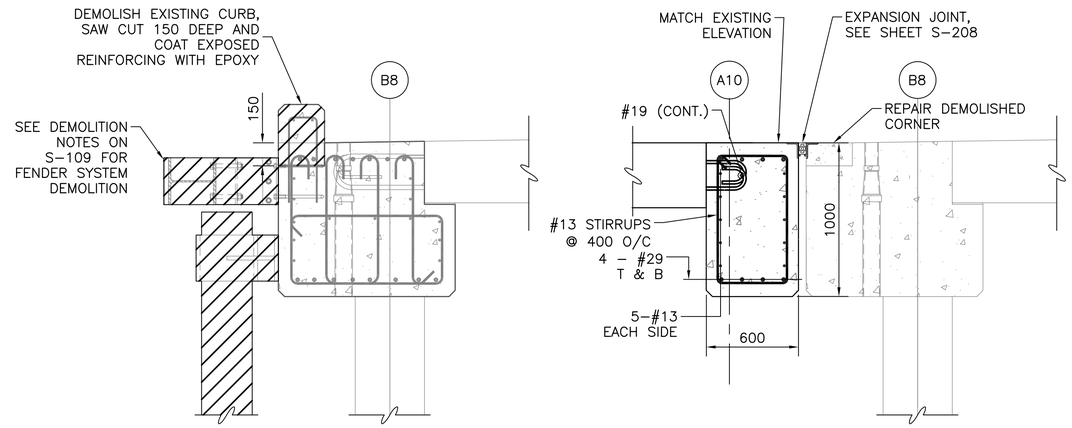

* EXISTING REINFORCING NOT SHOWN FOR CLARITY

DETAIL 2 S–109 | S–209
1:20

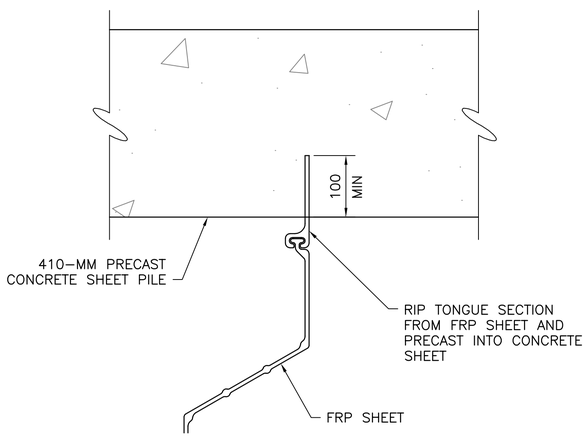

DETAIL A S–103 | S–209
1:5

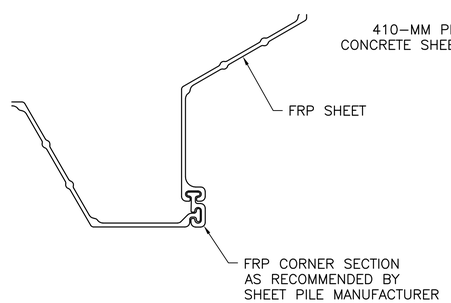

DETAIL B S–109 | S–209
1:5

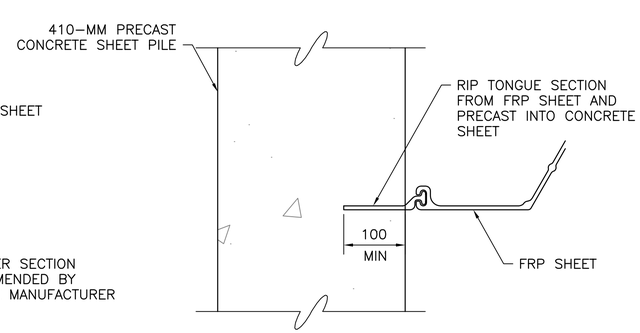

DETAIL C S–109 | S–209
1:5

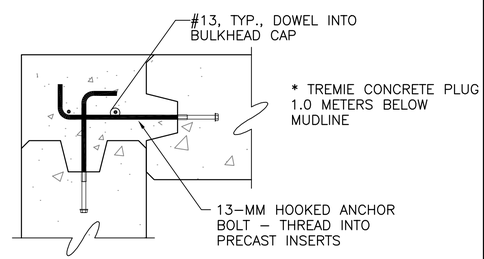

CONCRETE SHEET CLOSURE D S–109 | S–209
1:10

GRAPHIC SCALES

1:5 — 0 100 300 500mm
1:10 — 0 100 500 1000mm
1:20 — 0 500 1000 2000mm

APPR	
DATE	
DESCRIPTION	
STM.	

DESIGNED & ENGINEERED BY: LANTDIV NAVAL FACILITIES ENGINEERING COMMAND

SEAL

APPROVED
ACTIVITY – SATISFACTORY TO
DATE
APPROVED J.P. Bowen
FOR EFD FOR COMMANDER NAVFAC
10/02/03
DATE

A/E	EFD
DESIGN	BAE
DRAWN	ALF
REVIEW	RCK
QC	
CHIEF ARCH./ ENGR.	
PROJECT MANAGER	KB
FIRE PROTECTION	
BRANCH MANAGER	
DESIGN DIRECTOR	

DEPARTMENT OF THE NAVY
NAVAL FACILITIES ENGINEERING COMMAND
ATLANTIC DIVISION
NAVAL STATION NORFOLK, VIRGINIA
NAVAL STATION NORFOLK, VIRGINIA
SMALL CRAFT BASIN
SECTIONS AND DETAILS

CODE ID. NO. 80091 | SIZE D
SCALE:
EFD NO.
STA. PROJ. NO. P–094
SPEC. NO. 05–03–3066
CONSTR. CONTR. NO. N62470–03–B–3066
NAVFAC DRAWING NO. 4501314
SHEET 77 OF 123
S–209

DRAWFORM REVISION SEPT 2001

FILENAME: 5A0960–S–209.DWG, UPDATED ON 09/09/03 AT 13:06, XREFS: 5A0960–S–201, 0960PROJ–INFO

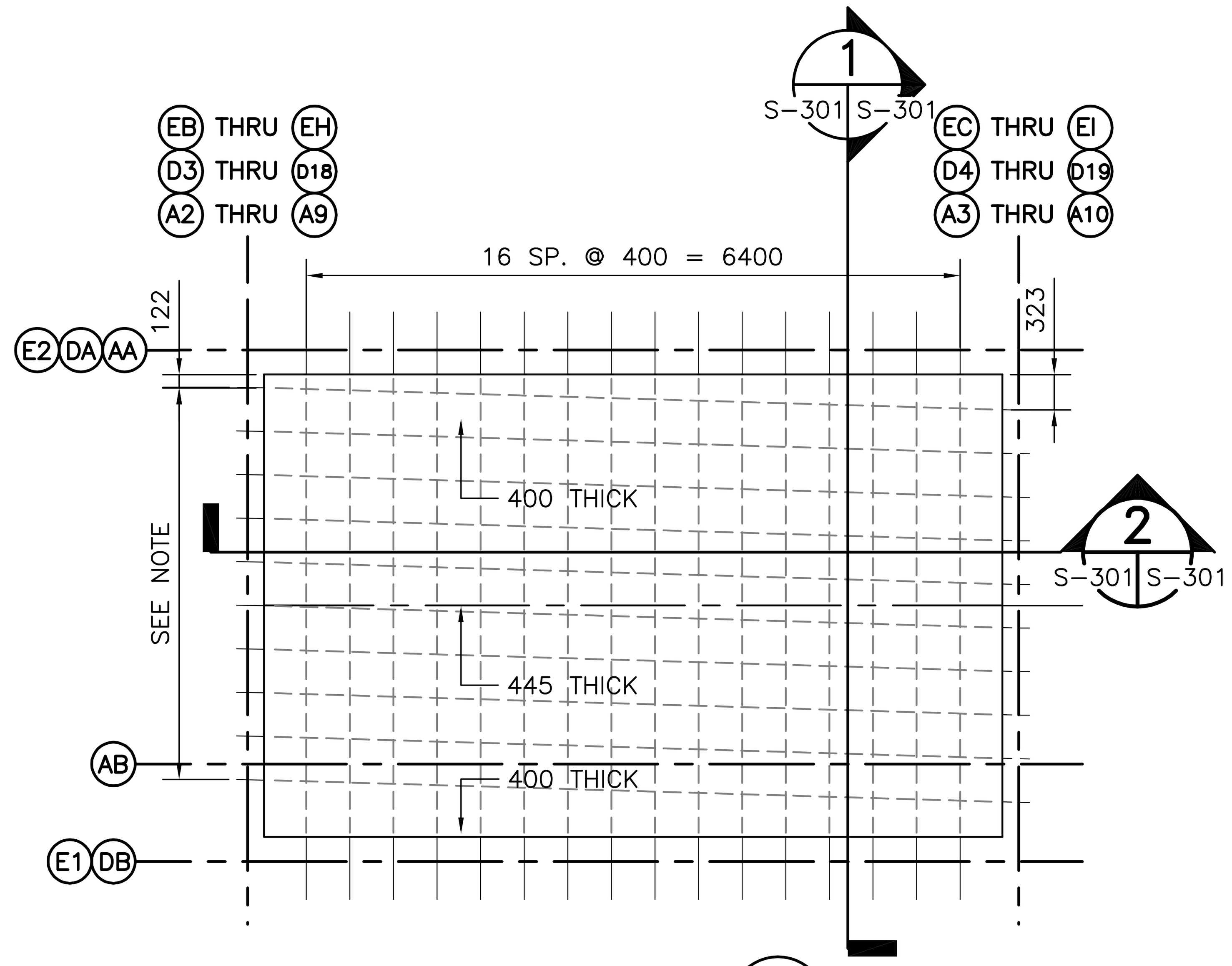

SLAB TYPE (S1)

NOTE: BENTS A2 – A10, 9 SP @ 400 = 3600
BENTS D3 – D19, 15 SP @ 400 = 6000
BENTS EB – EI, 15 SP @ 400 = 6000

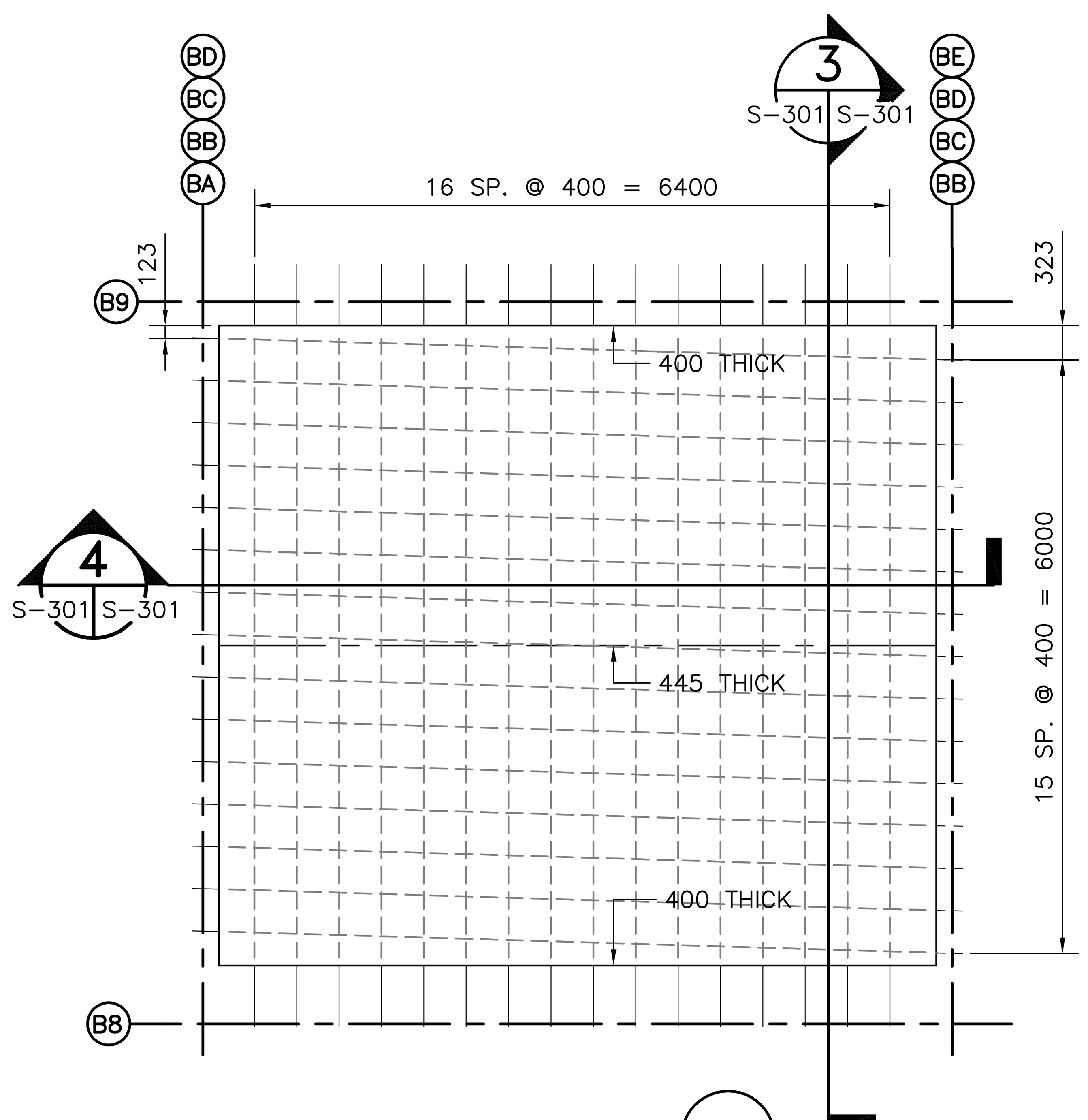

SLAB TYPE (S2)

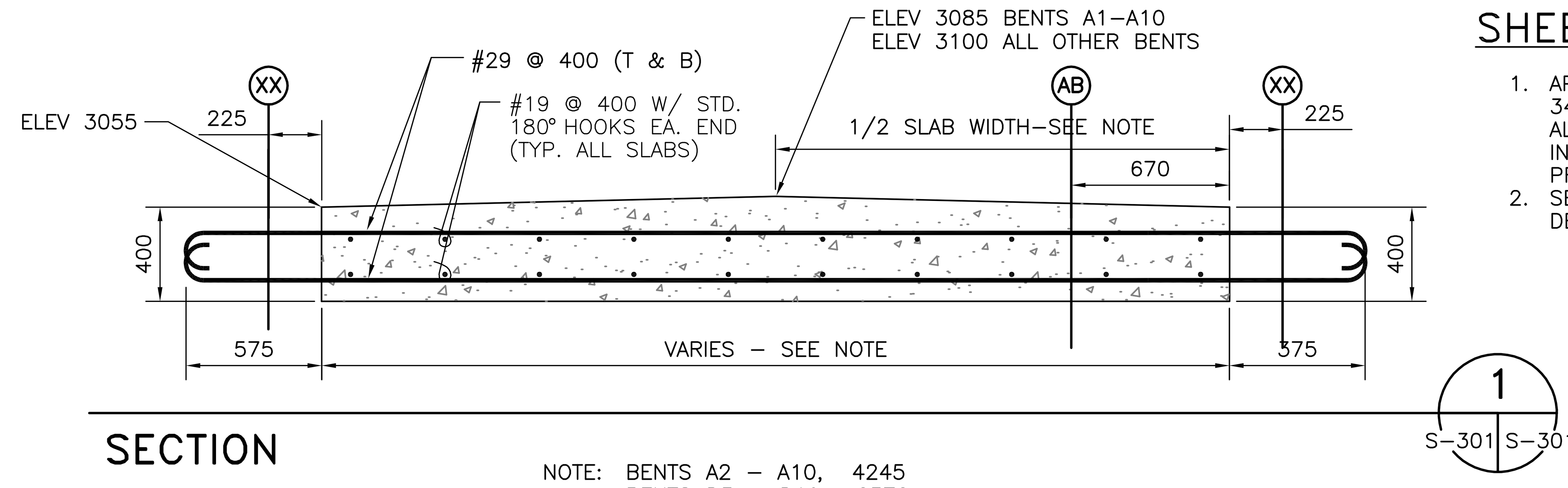

SECTION (1) S-301 S-301
1 : 20

NOTE: BENTS A2 – A10, 4245
BENTS D3 – D19, 6370
BENTS EB – EI, 6370

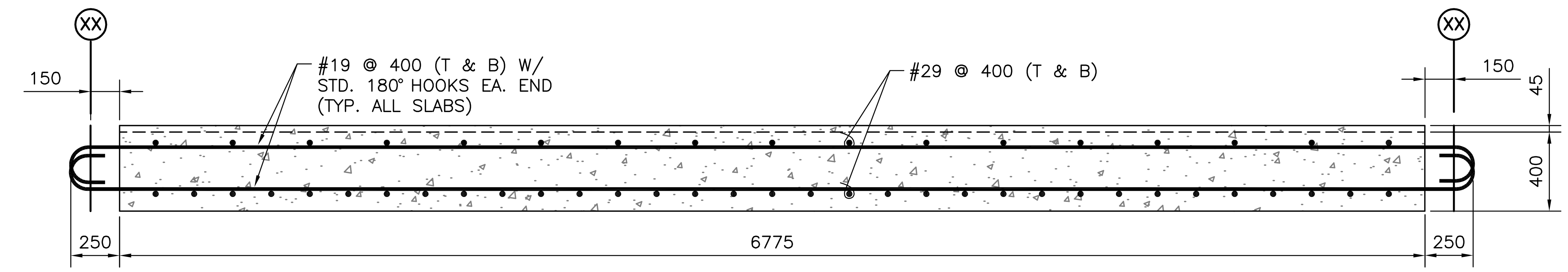

SECTION (2) S-301 S-301
1 : 20

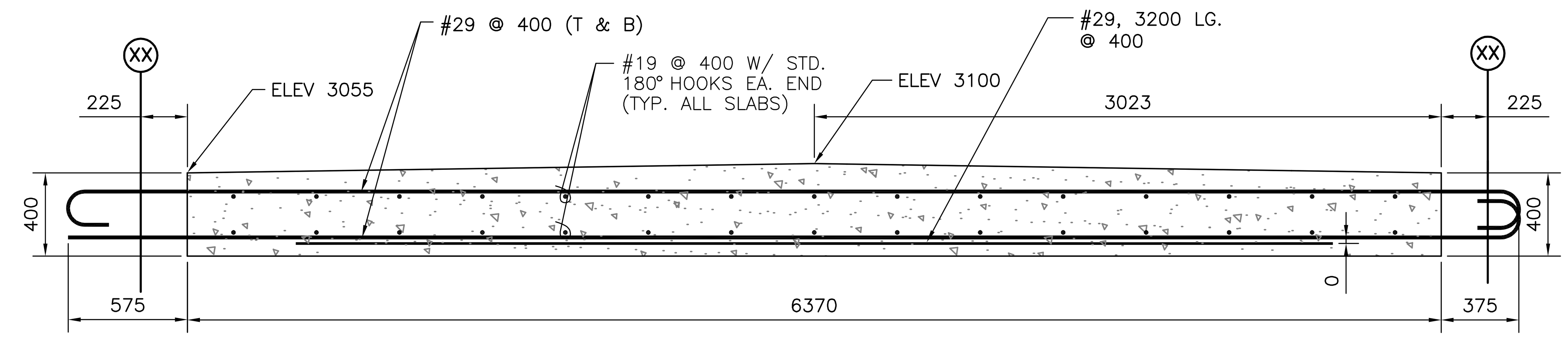

SECTION (3) S-301 S-301
1 : 20

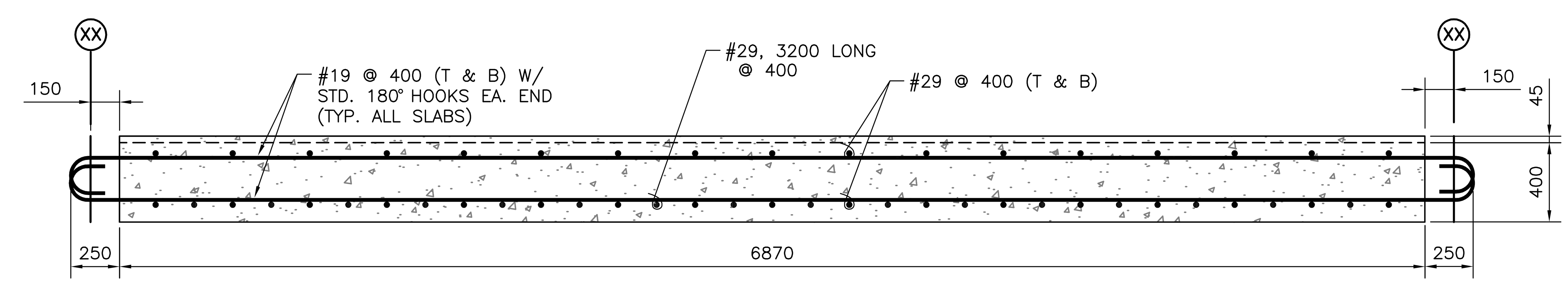

SECTION (4) S-301 S-301
1 : 20

SHEET NOTES:

1. APPLY AN ECCENTRIC LONGITUDINAL PRESTRESS OF 340 KN/M (NET, AFTER LOSSES), ACROSS THE WIDTH OF ALL PRECAST SLABS. ARRANGE PRESTRESSING STRANDS IN A SINGLE LAYER, 140–MM ABOVE THE BOTTOM OF ALL PRECAST SLABS.
2. SEE SHEET S–208 FOR SLAB INSERT LOCATIONS AND DETAILS.

RELIEVING PLATFORM PRECAST CONCRETE SLAB PLAN DETAILS

1 : 50

GRAPHIC SCALES

1:20 0 500 1000 2000mm

1:50 0 1000 3000 5000mm

DESIGNED & ENGINEERED BY: LANTDIV NAVAL FACILITIES ENGINEERING COMMAND

APPROVED
ACTIVITY – SATISFACTORY TO
DATE
APPROVED
FOR EFD FOR COMMANDER NAVFAC 10/02/03
DATE

A/E		EFD
	DESIGN	BCD
	DRAWN	BCD
	REVIEW	RCK
	QC	
	CHIEF ARCH./ ENGR.	
PROJECT MANAGER		KB
FIRE PROTECTION		
BRANCH MANAGER		
DESIGN DIRECTOR		

DEPARTMENT OF THE NAVY NAVAL FACILITIES ENGINEERING COMMAND
ATLANTIC DIVISION NORFOLK, VIRGINIA
NAVAL STATION NORFOLK, VIRGINIA

SMALL CRAFT BASIN
PRECAST PRESTRESSED CONCRETE SLABS

CODE ID. NO. 80091 SIZE D
SCALE:
EFD NO.
STA. PROJ. NO. P–094
SPEC. NO. 05–03–3066
CONSTR. CONTR. NO. N62470–03–B–3066
NAVFAC DRAWING NO. 4501315
SHEET 78 OF 123
S–301

DRAWFORM REVISION SEPT 2001

FILENAME: 5A0960–S–301.DWG, UPDATED ON 09/24/03 AT 13:09, XREFS: 0960PROJ–INFO

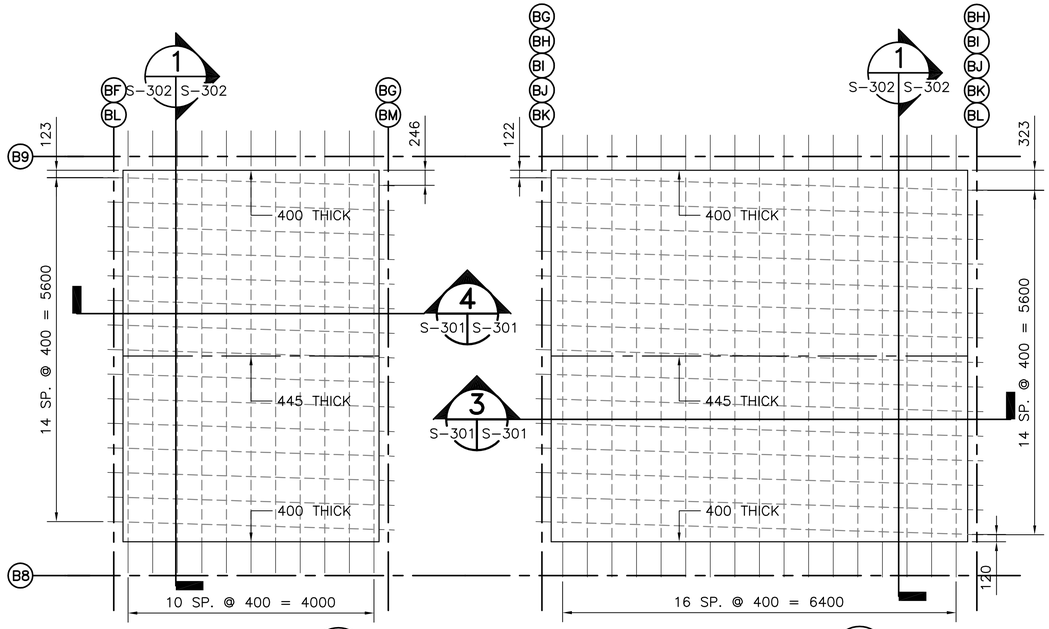

SLAB TYPE S3 SLAB TYPE S4

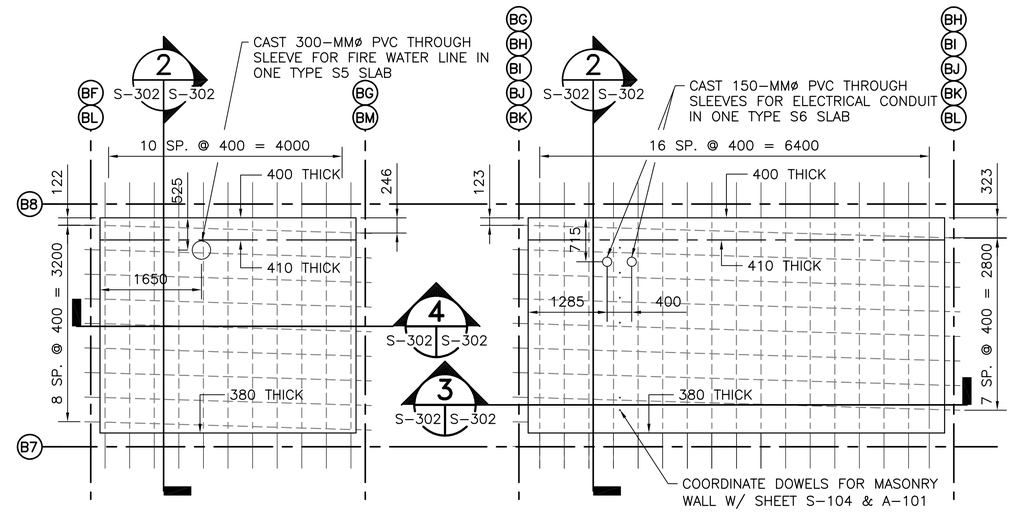

SLAB TYPE S5 SLAB TYPE S6

RELIEVING PLATFORM PRECAST CONCRETE SLAB PLAN DETAILS

1 : 50

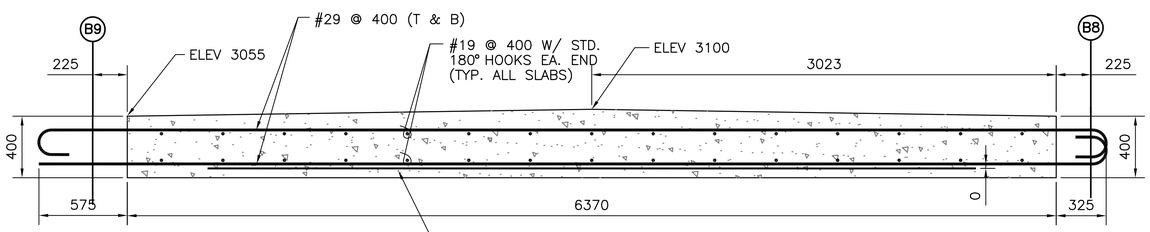

SECTION 1 S-302 S-302

1 : 20

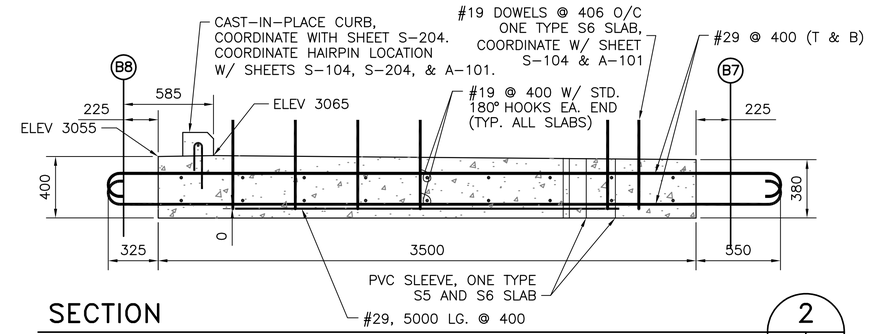

SECTION 2 S-302 S-302

1 : 20

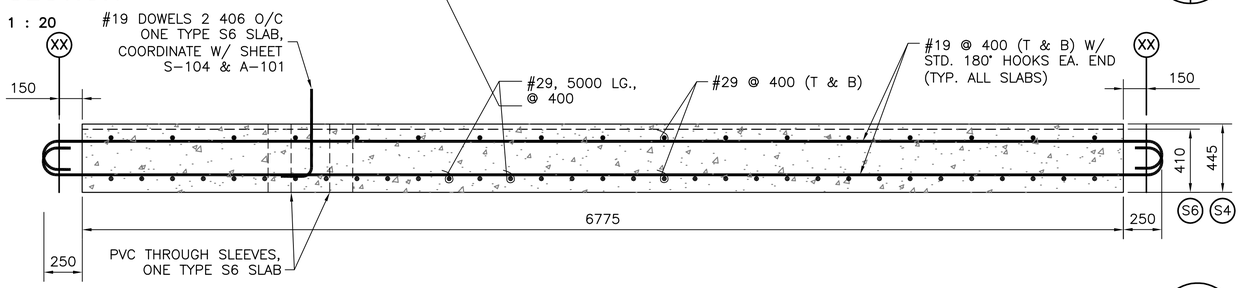

SECTION 3 S-302 S-302

1 : 20

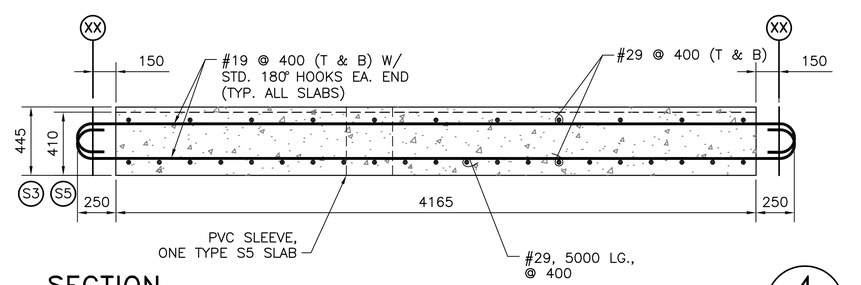

SECTION 4 S-302 S-302

1 : 20

SHEET NOTES:

1. APPLY AN ECCENTRIC LONGITUDINAL PRESTRESS OF 340 KN/M (NET, AFTER LOSSES), ACROSS THE WIDTH OF ALL PRECAST SLABS. ARRANGE PRESTRESSING STRANDS IN A SINGLE LAYER, 140-MM ABOVE THE BOTTOM OF ALL PRECAST SLABS.
2. SEE SHEET S-208 FOR SLAB INSERT LOCATIONS AND DETAILS.

GRAPHIC SCALES

1:20 0 500 1000 2000mm

1:50 0 1000 3000 5000mm

DESIGNED & ENGINEERED BY: LANTDIV NAVAL FACILITIES ENGINEERING COMMAND

APPROVED

ACTIVITY – SATISFACTORY TO

DATE

APPROVED J.P. Bowen FOR EFD FOR COMMANDER NAVFAC 10/02/03

DATE

A/E	EFD
DESIGN	BCD
DRAWN	BCD
REVIEW	RCK
QC	
CHIEF ARCH./ ENGR.	
PROJECT MANAGER	KB
FIRE PROTECTION	
BRANCH MANAGER	
DESIGN DIRECTOR	

DEPARTMENT OF THE NAVY NAVAL FACILITIES ENGINEERING COMMAND ATLANTIC DIVISION NAVAL STATION NORFOLK, VIRGINIA NAVAL STATION NORFOLK, VIRGINIA

SMALL CRAFT BASIN

PRECAST PRESTRESSED CONCRETE SLABS

CODE ID. NO. 80091 SIZE D

SCALE:

EFD NO.

STA. PROJ. NO. P-094

SPEC. NO. 05-03-3066

CONSTR. CONTR. NO. N62470-03-B-3066

NAVFAC DRAWING NO. 4501316

SHEET 79 OF 123

S-302

DRAWFORM REVISION SEPT 2001

FILENAME: 5A0960-S-302.DWG, UPDATED ON 09/24/03 AT 13:14, XREFS: 0960PROJ-INFO

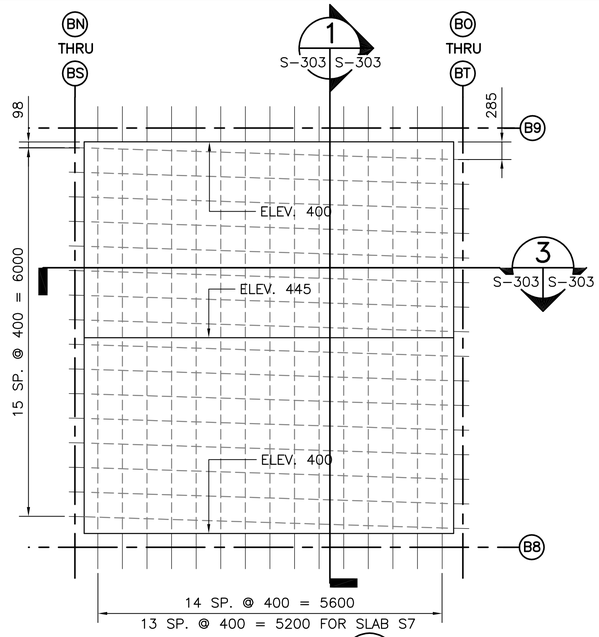

SLAB TYPE (S7)

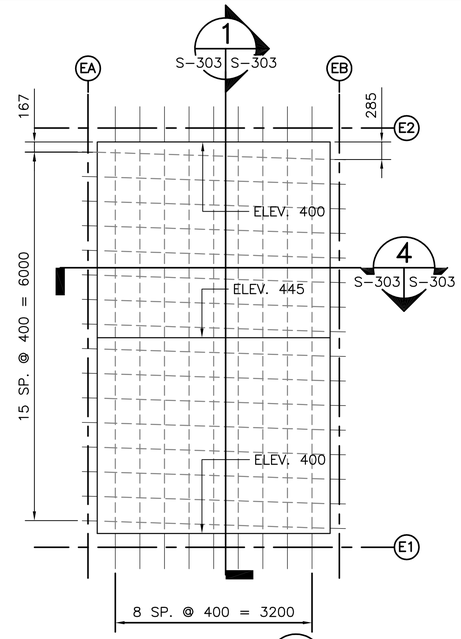

SLAB TYPE (S8)

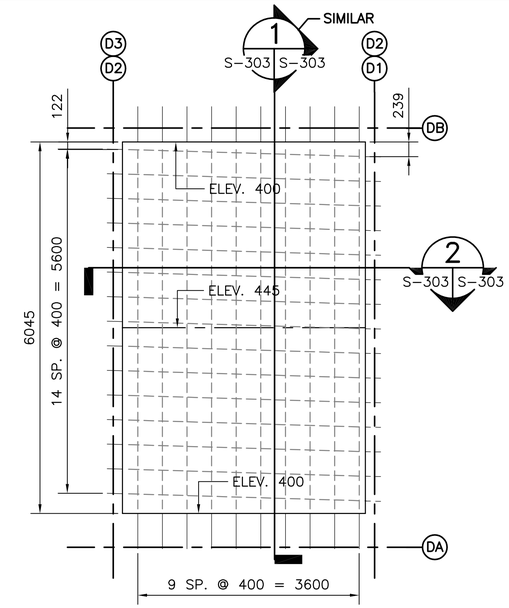

SLAB TYPE (S9)

RELIEVING PLATFORM PRECAST CONCRETE SLAB PLAN DETAILS

1 : 50

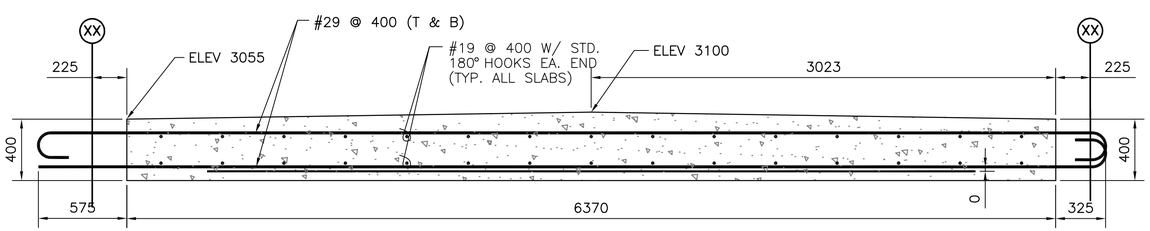

SECTION 1 (S-303 S-303)

1 : 20

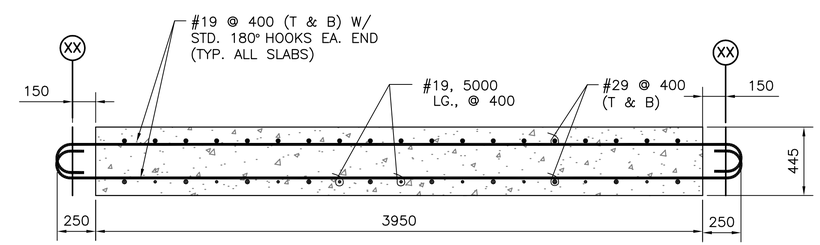

SECTION 2 (S-303 S-303)

1 : 20

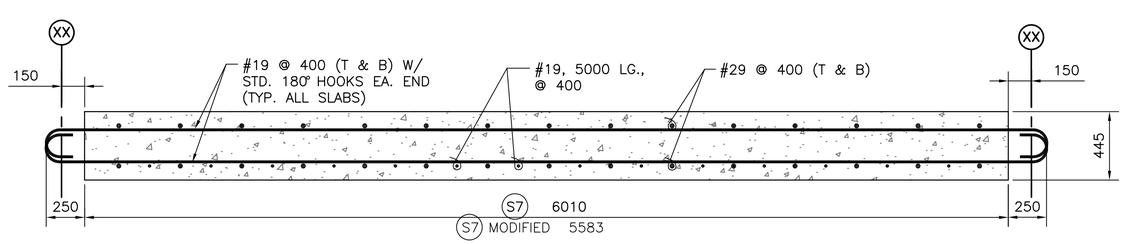

SECTION 3 (S-303 S-303)

1 : 20

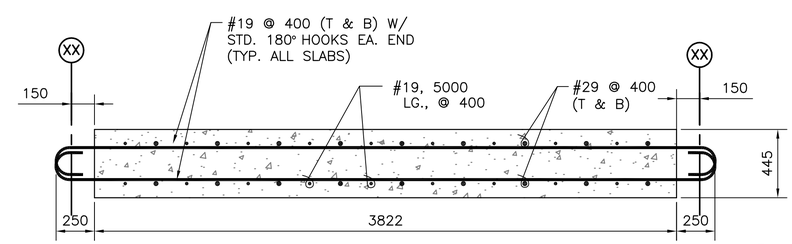

SECTION 4 (S-303 S-303)

1 : 20

SHEET NOTES:

1. APPLY AN ECCENTRIC LONGITUDINAL PRESTRESS OF 340 KN/M (NET, AFTER LOSSES), ACROSS THE WIDTH OF ALL PRECAST SLABS. ARRANGE PRESTRESSING STRANDS IN A SINGLE LAYER, 140-MM ABOVE THE BOTTOM OF ALL PRECAST SLABS.
2. SEE SHEET S-208 FOR SLAB INSERT LOCATIONS AND DETAILS.

GRAPHIC SCALES

1:50 — 0, 1000, 3000, 5000mm

1:20 — 0, 500, 1000, 2000mm

DATE	DESCRIPTION	STM.	APPR.

DESIGNED & ENGINEERED BY: LANTDIV NAVAL FACILITIES ENGINEERING COMMAND

SEAL

APPROVED

ACTIVITY – SATISFACTORY TO

DATE

APPROVED J.P. Bowen

FOR EFD FOR COMMANDER NAVFAC 10/02/03

DATE

A/E	EFD
DESIGN	BCD
DRAWN	BCD
REVIEW	RCK
QC	
CHIEF ARCH./ ENGR.	
PROJECT MANAGER	KB
FIRE PROTECTION	
BRANCH MANAGER	
DESIGN DIRECTOR	

DEPARTMENT OF THE NAVY — NAVAL FACILITIES ENGINEERING COMMAND — ATLANTIC DIVISION — NAVAL STATION NORFOLK, VIRGINIA — NAVAL STATION NORFOLK, VIRGINIA

SMALL CRAFT BASIN

PRECAST PRESTRESSED CONCRETE SLABS

CODE ID. NO. 80091 | SIZE D

SCALE:

EFD NO.

STA. PROJ. NO. P-094

SPEC. NO. 05-03-3066

CONSTR. CONTR. NO. N62470-03-B-3066

NAVFAC DRAWING NO. 4501317

SHEET 80 OF 123

S-303

DRAWFORM REVISION SEPT 2001

FILENAME: 5A0960-S-303.DWG, UPDATED ON 09/24/03 AT 13:21, XREFS: 0960PROJ-INFO

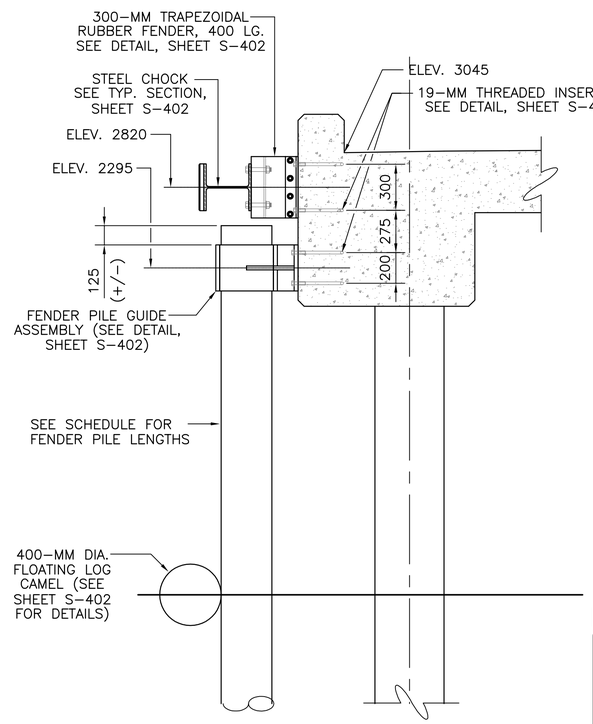

TYPICAL FENDER SECTION

1 : 20

S-401 | S-401

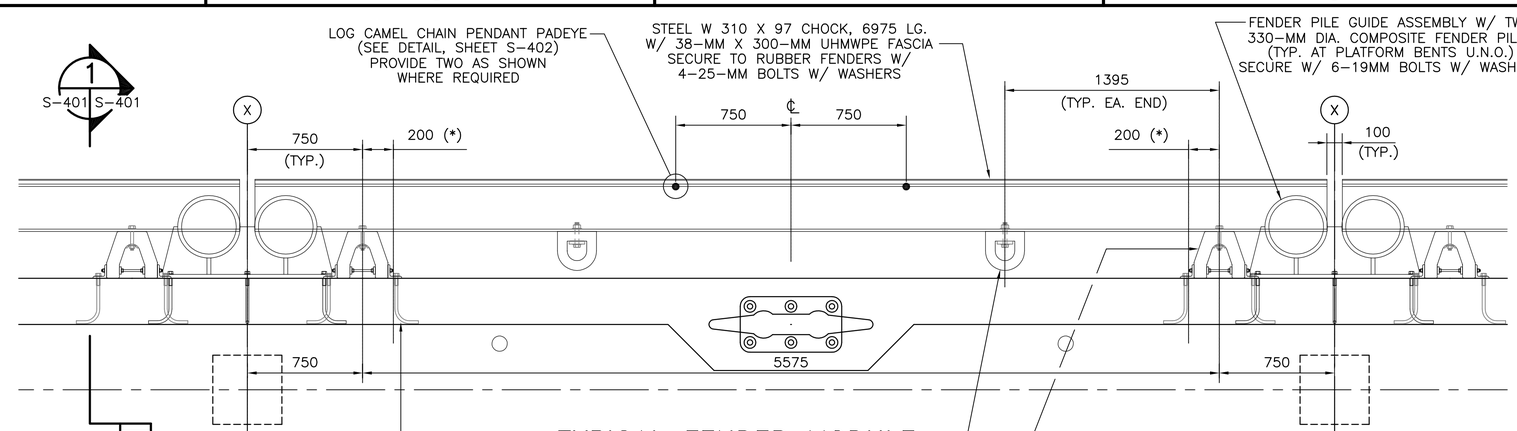

TYPICAL FENDER MODULE

1 : 20

FENDER PILE SCHEDULE

DIA.	FROM BENT	TO BENT	LENGTH
330	A1	A4 (INCL.)	19790
330	A4	A10	15225
330	BA	BT	12180
330	AREA C	AREA C	15225
330	D1	D19	15225
330	EA	EI	15225

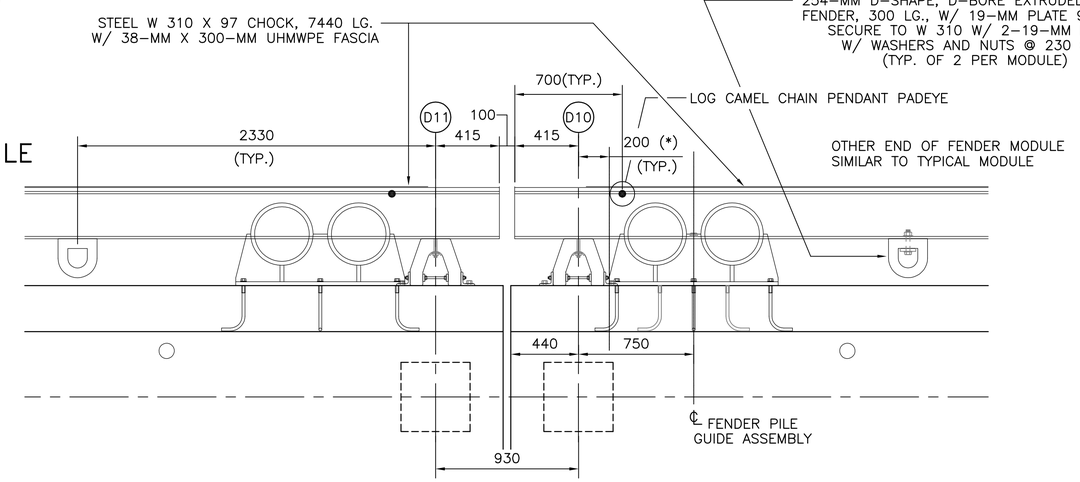

FENDER MODULES AT EXP. JOINT

1 : 20

(*) - PROVIDE AND INSTALL 2 CHOCK CHAIN RESTRAINTS PER STEEL CHOCK ASSEMBLY SEE "CHAIN RESTRAINT DETAIL", THIS SHEET

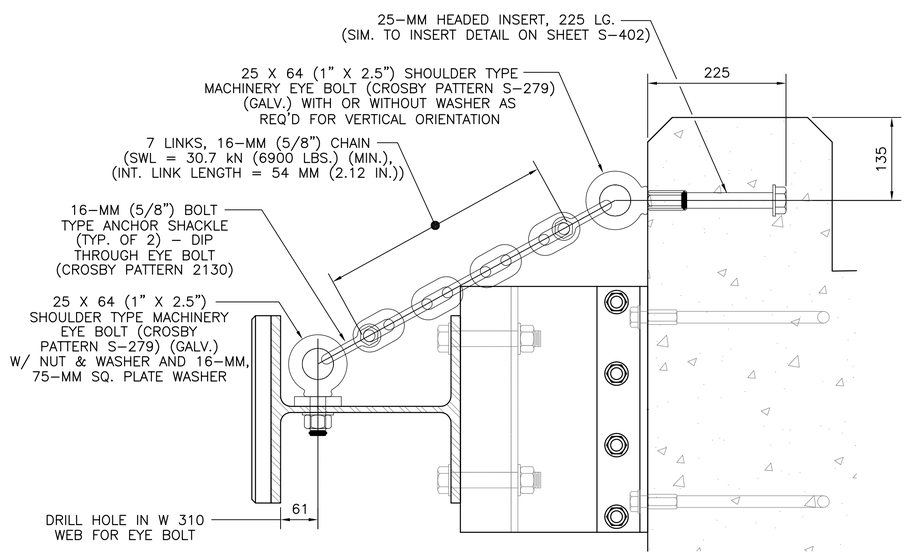

CHAIN RESTRAINT DETAIL

1 : 5

(TWO REQUIRED PER CHOCK ASSEMBLY)

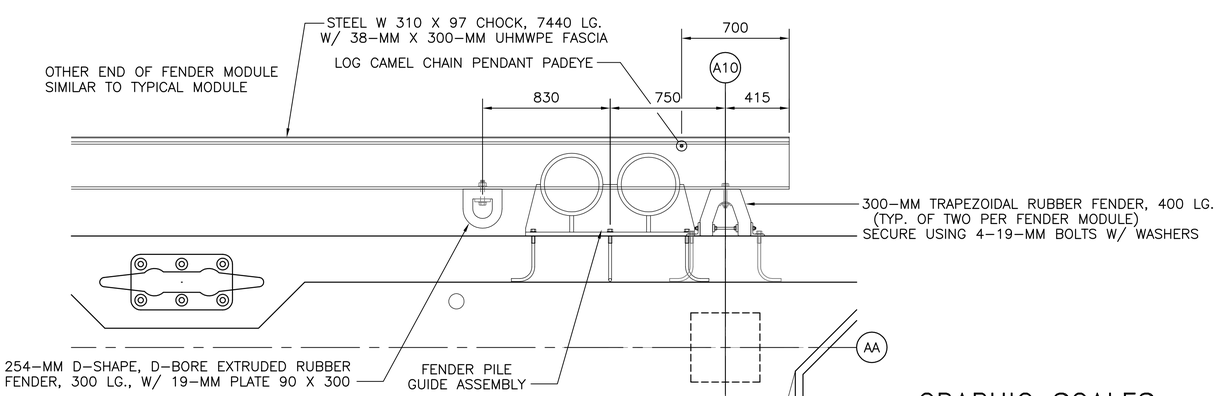

FENDER MODULE AT A10

1 : 20

GRAPHIC SCALES

1:5 — 0, 100, 300, 500mm

1:20 — 0, 500, 1000, 2000mm

APPR	DATE	DESCRIPTION	STM.

DESIGNED & ENGINEERED BY: LANTDIV NAVAL FACILITIES ENGINEERING COMMAND

SEAL

APPROVED

ACTIVITY - SATISFACTORY TO

DATE

APPROVED J P Bowen FOR EFD FOR COMMANDER NAVFAC 10/02/03

DATE

A/E	EFD
DESIGN	BAE
DRAWN	BAE
REVIEW	RCK
QC	
CHIEF ARCH./ ENGR.	
PROJECT MANAGER	KB
FIRE PROTECTION	
BRANCH MANAGER	
DESIGN DIRECTOR	

DEPARTMENT OF THE NAVY — NAVAL FACILITIES ENGINEERING COMMAND — ATLANTIC DIVISION — NORFOLK, VIRGINIA

NAVAL STATION — NAVAL STATION — NORFOLK, VIRGINIA

SMALL CRAFT BASIN

FENDER SYSTEM DETAILS

CODE ID. NO. 80091 | SIZE D

SCALE: AS NOTED

EFD NO.

STA. PROJ. NO. P-094

SPEC. NO. 05-03-3066

CONSTR. CONTR. NO. N62470-03-B-3066

NAVFAC DRAWING NO. 4501318

SHEET 81 OF 123

S-401

DRAWFORM REVISION SEPT 2001

FILENAME: 5A0960-S-401.DWG, UPDATED ON 09/24/03 AT 08:10, XREFS: MASTER, 0960PROJ-INFO

1	2	3	4	5

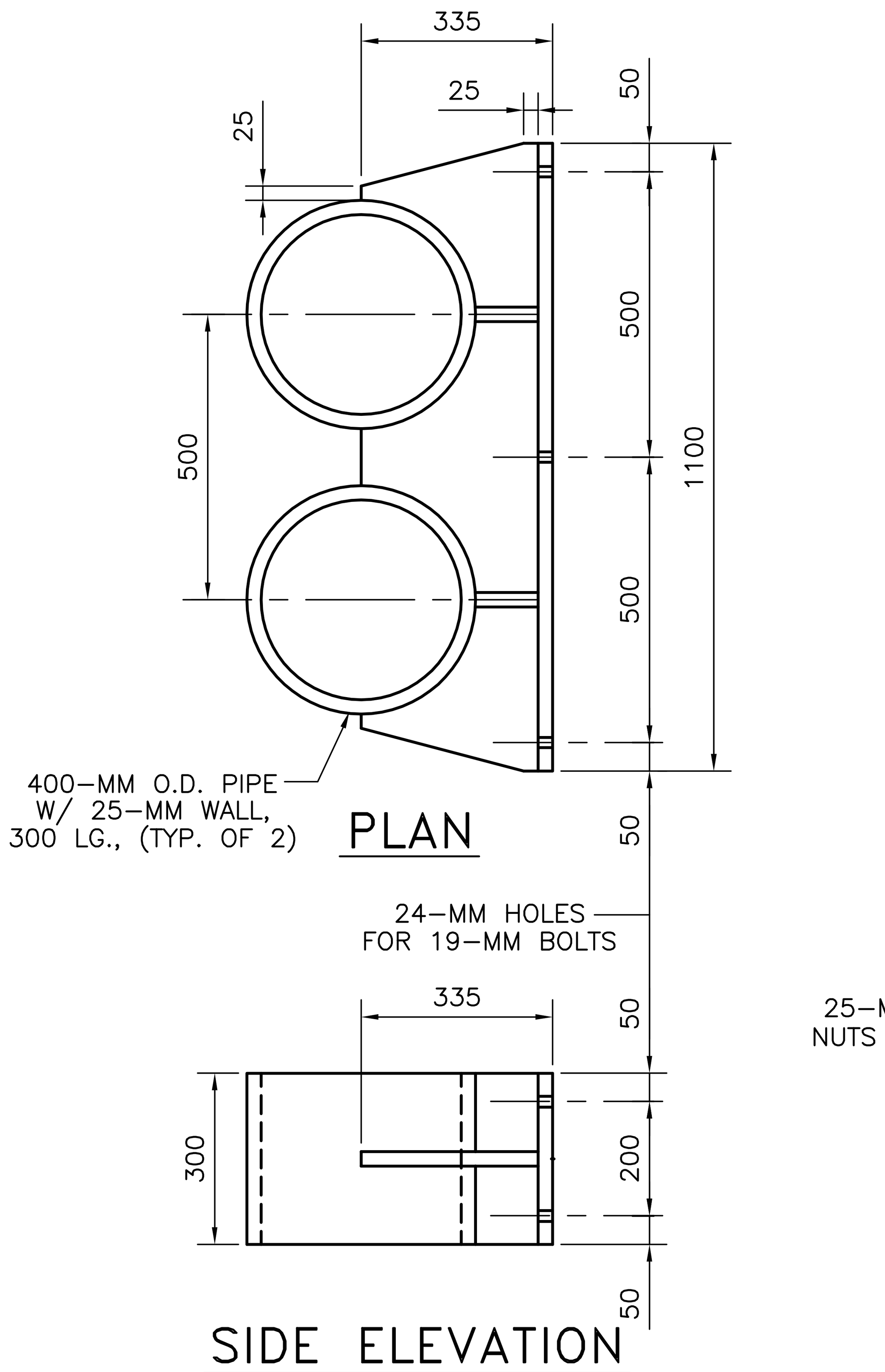

FENDER PILE GUIDE ASSEMBLY
1 : 10

FENDER PILE GUIDE FABRICATION NOTES

1. FABRICATE FENDER PILE GUIDE ASSEMBLIES USING 25–MM PLATE, ASSEMBLED WITH 19–MM CONTINUOUS FILLET WELDS, OR FULL PENETRATION SINGLE OR DOUBLE BEVEL WELDS, ALL AROUND, AS APPROPRIATE.
2. HOT – DIP GALVANIZE COMPLETED FABRICATIONS.

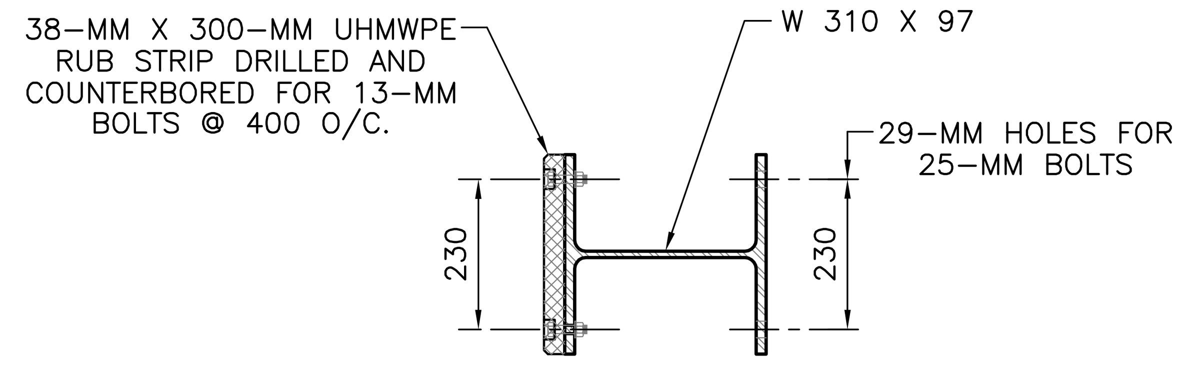

TYPICAL CHOCK SECTION
SCALE: 1:10

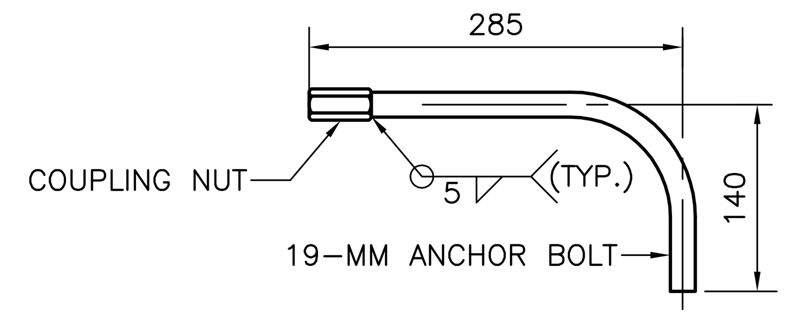

19–MM THREADED INSERT DETAIL
1 : 5

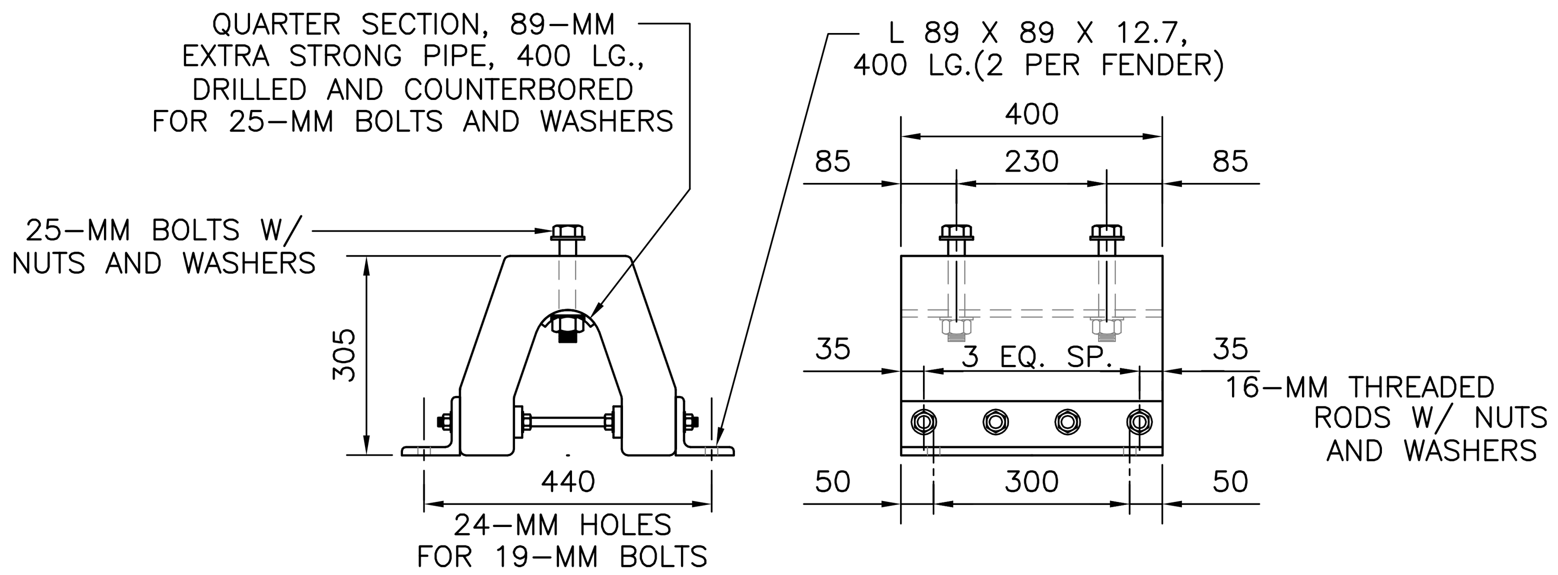

END ELEVATION SIDE ELEVATION

MIN. ENERGY ABSORPTION – 3.0 TON–METERS PER METER LENGTH @ 150–MM DEFLECTION
MAX. REACTION FORCE – 30 METRIC TONS PER METER LENGTH @ 150–MM DEFLECTION

300–MM TRAPEZOIDAL RUBBER FENDER DETAIL
1 : 10

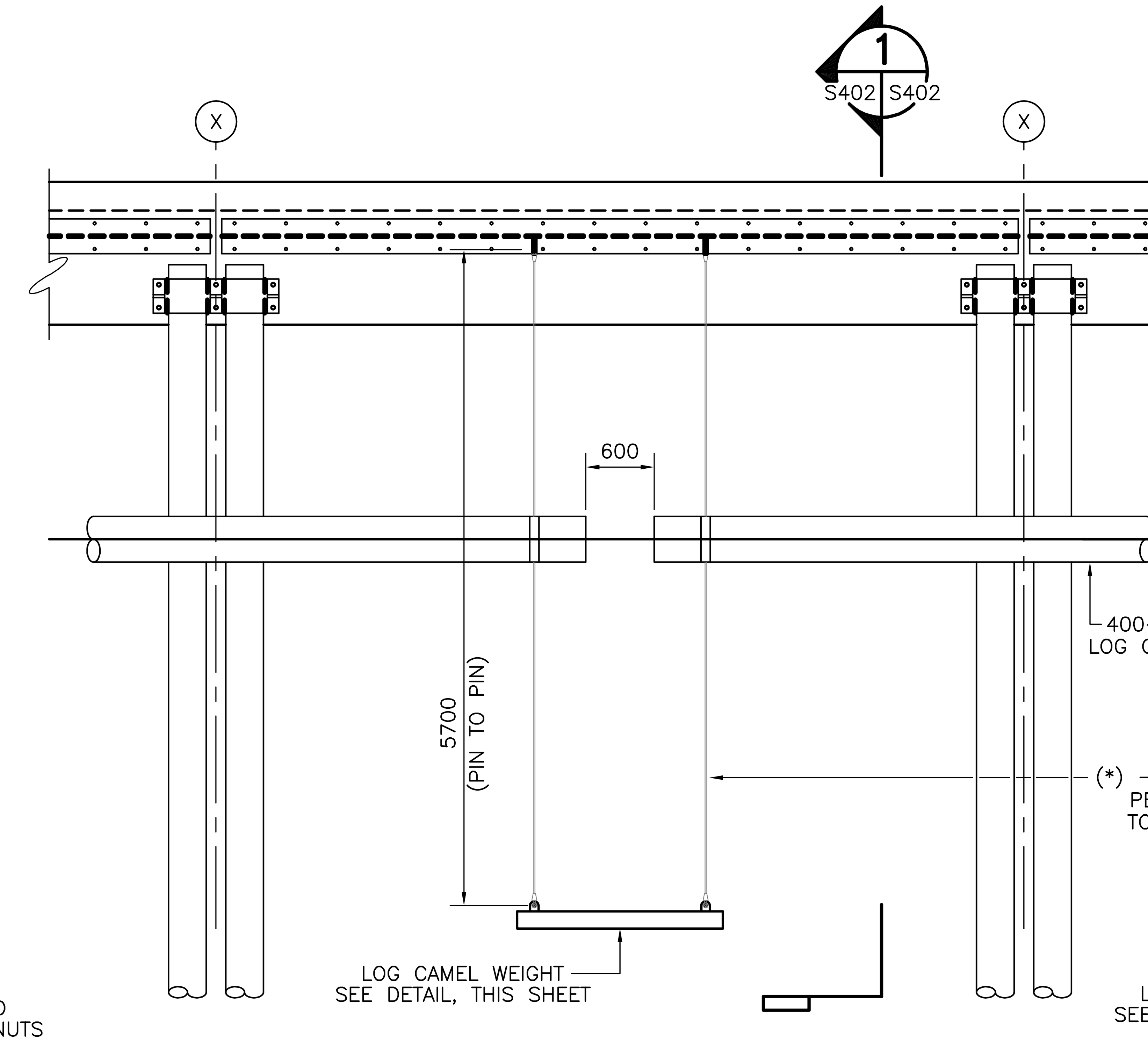

FENDER SYSTEM ELEVATION
1 : 40

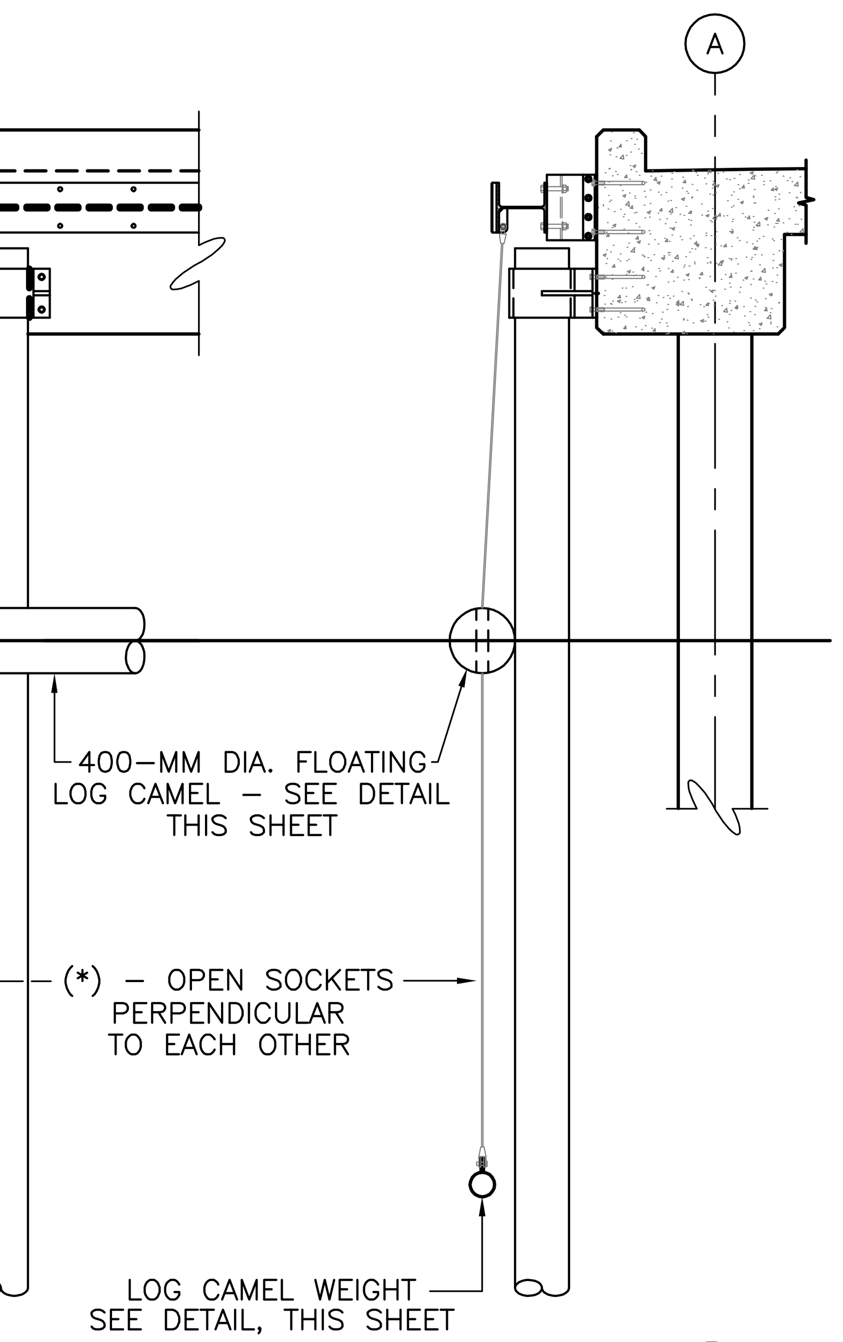

SECTION 1 S–402 S–402
1 : 40

(*) – 11.9–MM O.D. PLASTIC–IMPREGNATED WIRE ROPE SLING (9.5–MM GALVANIZED ROPE, 7 X 19 CONSTRUCTION, MIN. BREAK STRENGTH – 64 kN (14,400 LBS.)) W/ RESIN–POURED OPEN SOCKETS, EACH END (MACWHYTE "SPACE–LAY" MEETS THIS REQ.)

CONTRACTOR MAY, AT HIS OPTION, USE PLASTIC–IMPREGNATED WIRE ROPE WITH 9.5–MM EXTRA HEAVY WIRE ROPE THIMBLES (CROSBY PATTERN SS–414) AND WIRE ROPE CLIPS EA. END PER THE WIRE ROPE MFG. RECOMMENDATIONS, WITH 16–MM BOLT–TYPE SAFETY ANCHOR SHACKLES IN LIEU OF THE RESIN–POURED SOCKETS.

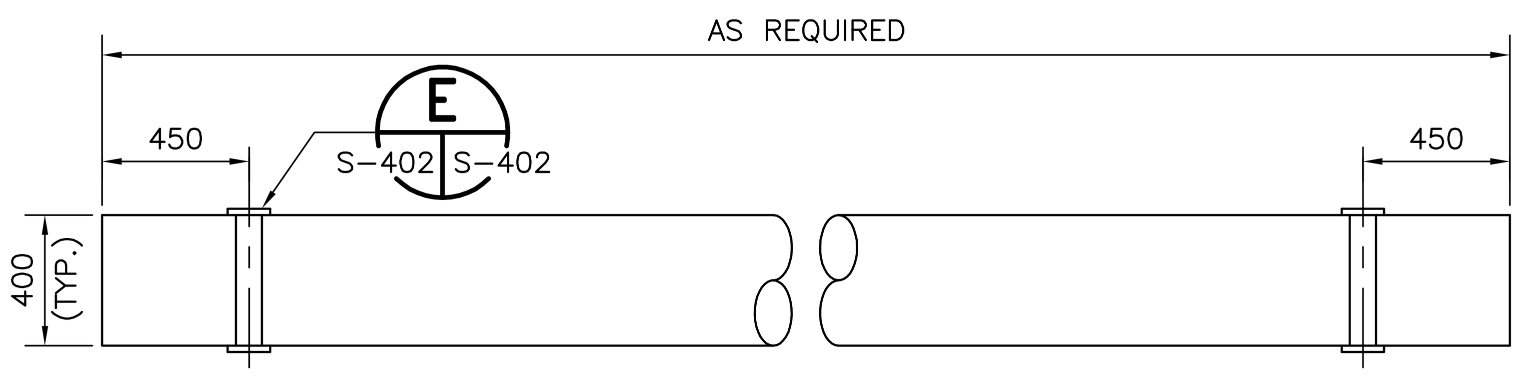

LOG CAMEL DETAIL
SCALE: 1:20

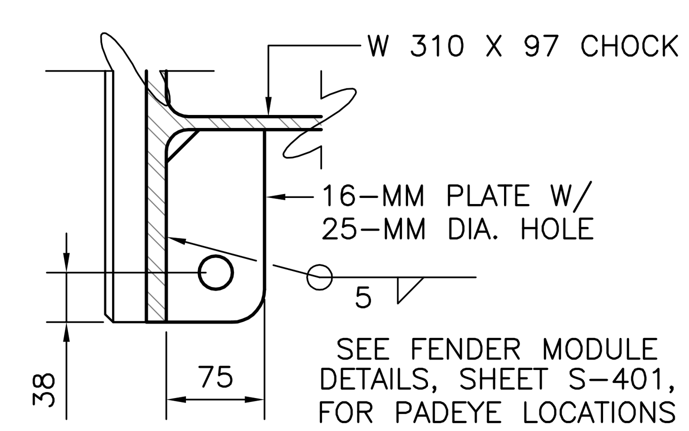

LOG CAMEL CHAIN PENDANT PADEYE DETAIL
1 : 5

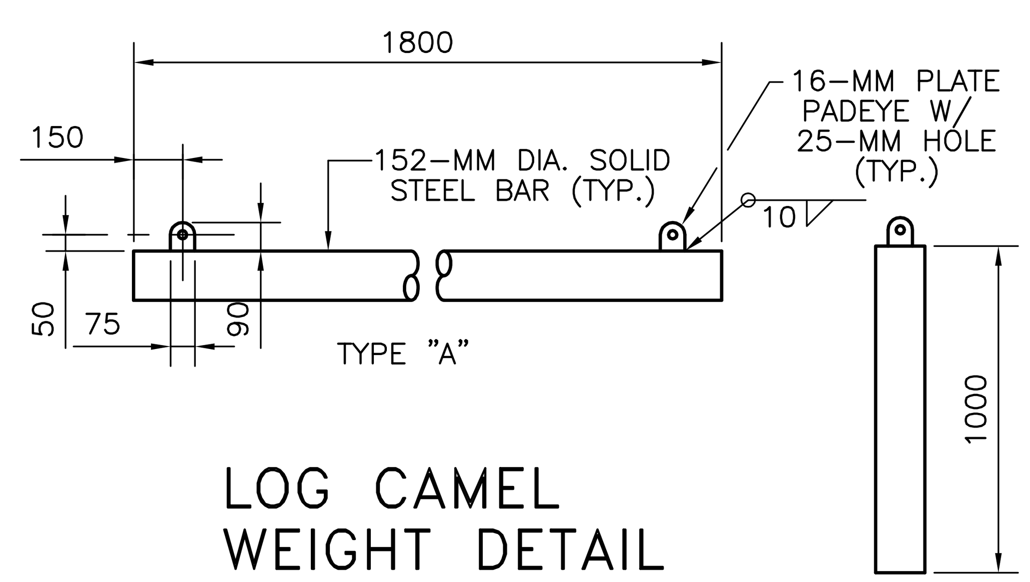

LOG CAMEL WEIGHT DETAIL
1 : 20

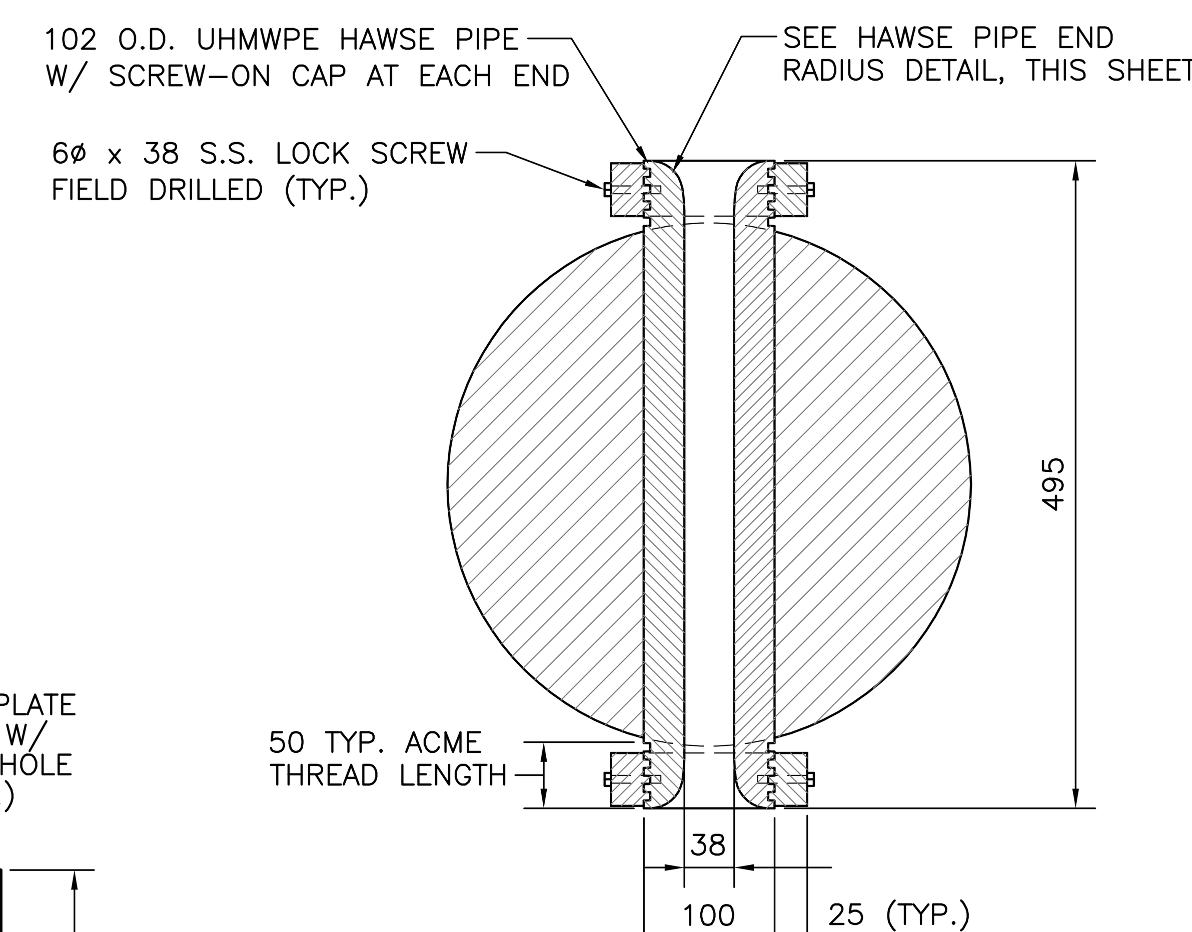

LOG CAMEL HAWSE DETAIL
1 : 5

E S–402 S–402

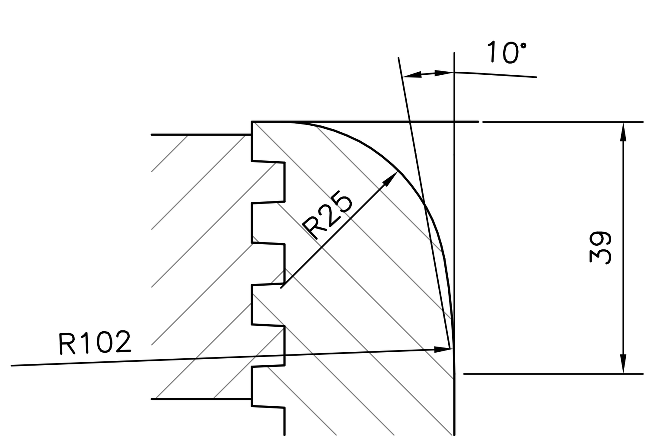

HAWSE PIPE END RADIUS DETAIL
NO SCALE

GRAPHIC SCALES

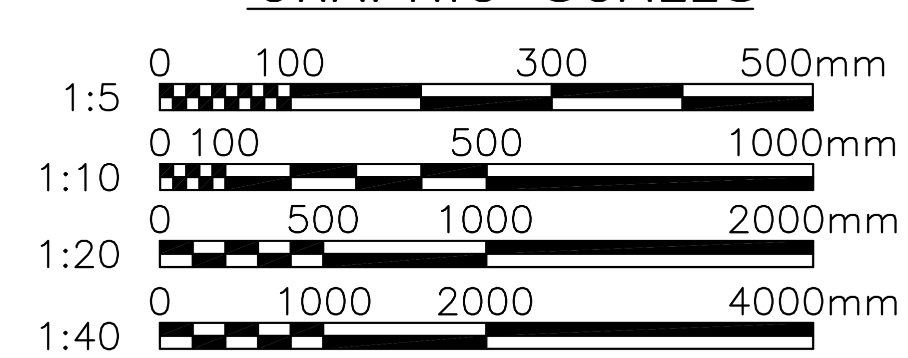

	DATE	APPR
SYM.	DESCRIPTION	

DESIGNED & ENGINEERED BY: LANTDIV
NAVAL FACILITIES ENGINEERING COMMAND

SEAL
APPROVED
ACTIVITY – SATISFACTORY TO
DATE
APPROVED JPBowen 10/02/03
FOR EFD FOR COMMANDER NAVFAC
DATE
A/E EFD
DESIGN BAE
DRAWN BAE
REVIEW RCK
QC
CHIEF ARCH./ ENGR.
PROJECT MANAGER KB
FIRE PROTECTION
BRANCH MANAGER
DESIGN DIRECTOR

DEPARTMENT OF THE NAVY
NAVAL FACILITIES ENGINEERING COMMAND
ATLANTIC DIVISION
NORFOLK, VIRGINIA
NAVAL STATION
NORFOLK, VIRGINIA
NAVAL STATION
SMALL CRAFT BASIN
FENDER SYSTEM SECTIONS AND DETAILS

CODE ID. NO. 80091 SIZE D
SCALE: AS NOTED
EFD NO.
STA. PROJ. NO. P–094
SPEC. NO. 05–03–3066
CONSTR. CONTR. NO. N62470–03–B–3066
NAVFAC DRAWING NO. 4501319
SHEET 82 OF 123
S–402
DRAWFORM REVISION SEPT 2001

FILENAME: 5A0960–S–402.DWG, UPDATED ON 08/05/03 AT 13:16, XREFS: 0960PROJ–INFO

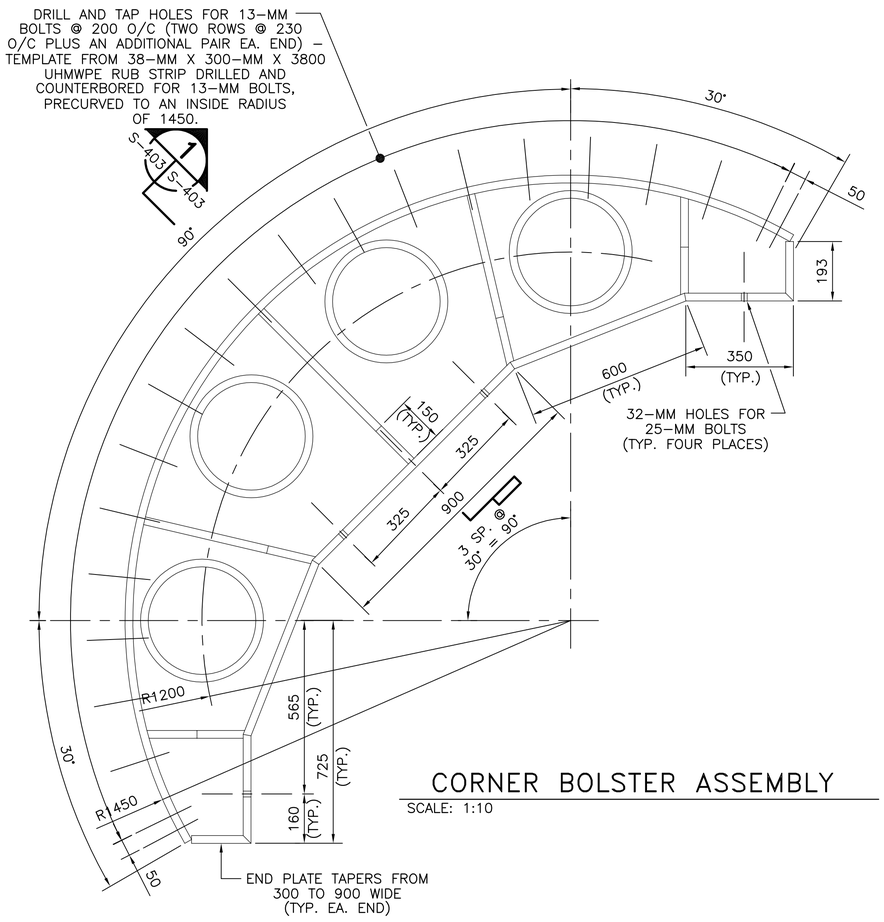

CORNER BOLSTER ASSEMBLY

SCALE: 1:10

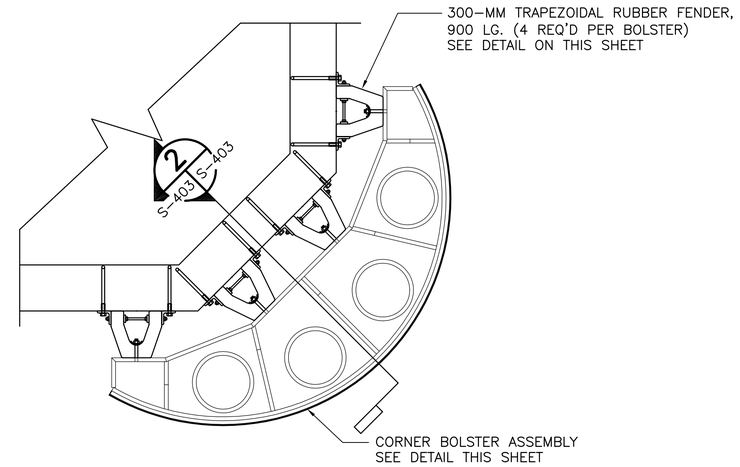

DETAIL A

SCALE: 1:20

S-109 | S-403

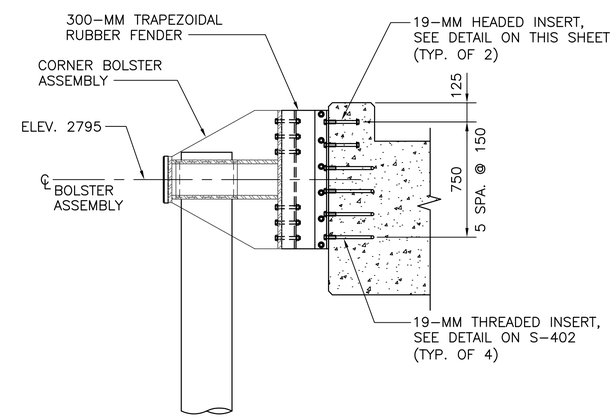

SECTION 2

SCALE: 1:20

S-403 | S-403

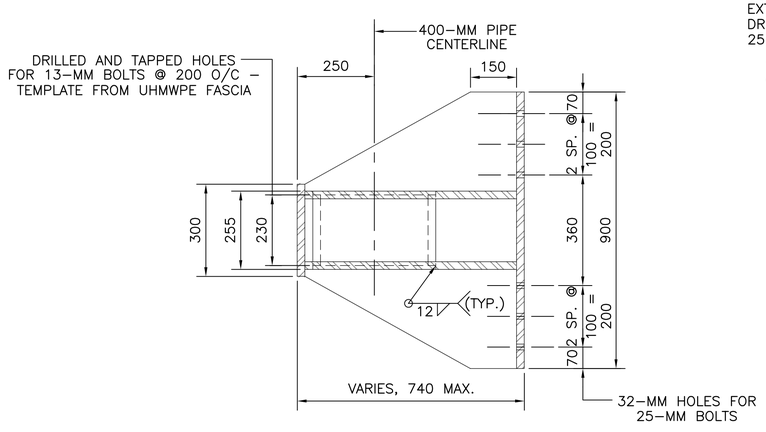

SECTION 1

SCALE: 1:10

S-403 | S-403

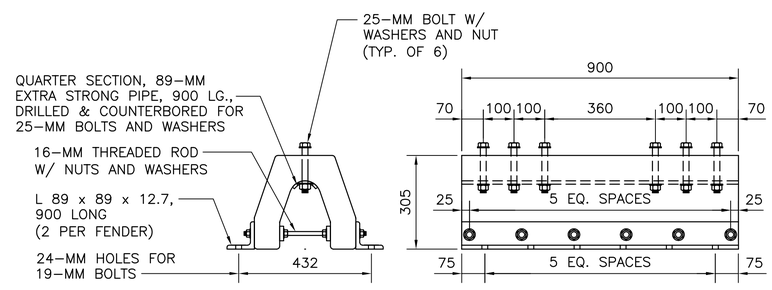

END ELEVATION

SIDE ELEVATION

300-MM TRAPEZOIDAL RUBBER FENDER

SCALE: 1:10

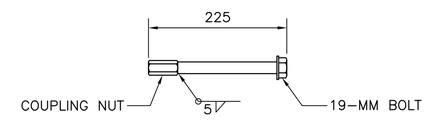

19-MM HEADED INSERT DETAIL

SCALE: 1:5

BOLSTER ASSEMBLY / FENDER PILE GUIDE FABRICATION NOTES

1. FABRICATE BOLSTERS AND FENDER PILE GUIDE ASSEMBLIES USING 25-MM PLATE, ASSEMBLED WITH 19-MM CONTINUOUS FILLET WELDS, OR FULL PENETRATION SINGLE OR DOUBLE BEVEL WELDS, ALL AROUND, AS APPROPRIATE.
2. HOT – DIP GALVANIZE COMPLETED FABRICATIONS.
3. TEMPLATE DRILLED AND TAPPED HOLES IN FRONT PLATE FROM UHMWPE RUB STRIP. SECURE UHMWPE RUB STRIP USING 13-MM BOLTS W/ WASHERS.

GRAPHIC SCALES

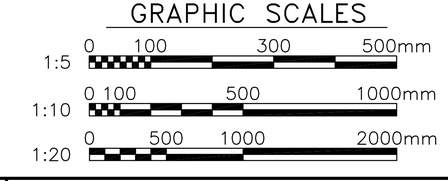

DATE	DESCRIPTION	STM.	APPR.

DESIGNED & ENGINEERED BY: LANTDIV NAVAL FACILITIES ENGINEERING COMMAND

SEAL

APPROVED

ACTIVITY – SATISFACTORY TO

DATE

APPROVED J.P. Bowen FOR EFD FOR COMMANDER NAVFAC 10/02/03

DATE

	A/E	EFD
DESIGN		BAE
DRAWN		BAE
REVIEW		RCK
QC		
CHIEF ARCH./ ENGR.		
PROJECT MANAGER		KB
FIRE PROTECTION		
BRANCH MANAGER		
DESIGN DIRECTOR		

DEPARTMENT OF THE NAVY
NAVAL FACILITIES ENGINEERING COMMAND
ATLANTIC DIVISION
NAVAL STATION
NORFOLK, VIRGINIA
NAVAL STATION NORFOLK, VIRGINIA

SMALL CRAFT BASIN

FENDER SYSTEM SECTIONS AND DETAILS

CODE ID. NO. 80091 | SIZE D

SCALE: AS NOTED

EFD NO.

STA. PROJ. NO. P-094

SPEC. NO. 05-03-3066

CONSTR. CONTR. NO. N62470-03-B-3066

NAVFAC DRAWING NO. 4501320

SHEET 83 OF 123

S-403

DRAWFORM REVISION SEPT 2001

FILENAME: 5A0960-S-403.DWG, UPDATED ON 09/09/03 AT 13:08, XREFS: 0960PROJ-INFO

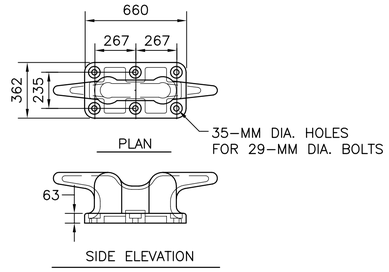

1067-MM (42 INCH) CLEAT DETAIL

1 : 20

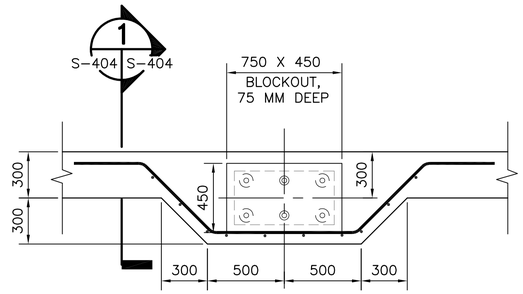

CLEAT PAD DETAIL

1 : 20

A
S-107 S-404

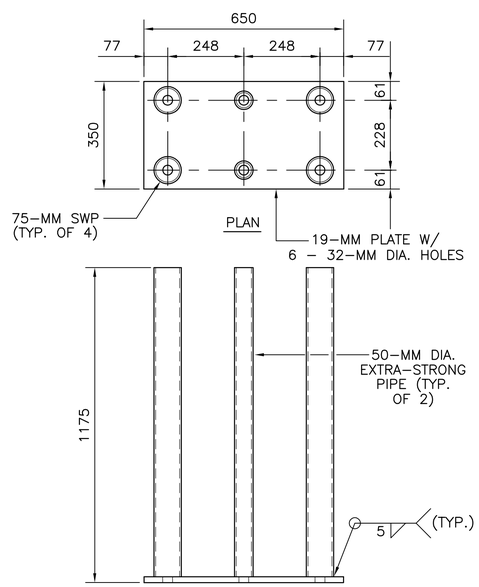

CLEAT BOLT SLEEVE ASSEMBLY

1 : 10

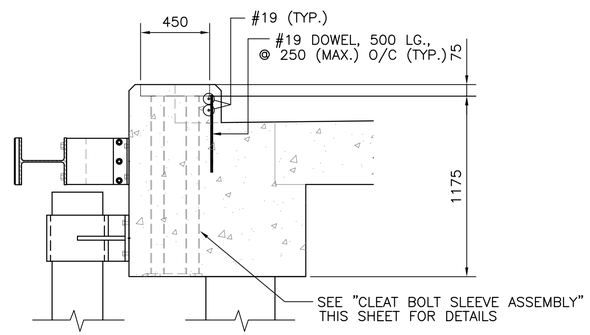

CLEAT PAD SECTION

1 : 20

1
S-404 S-404

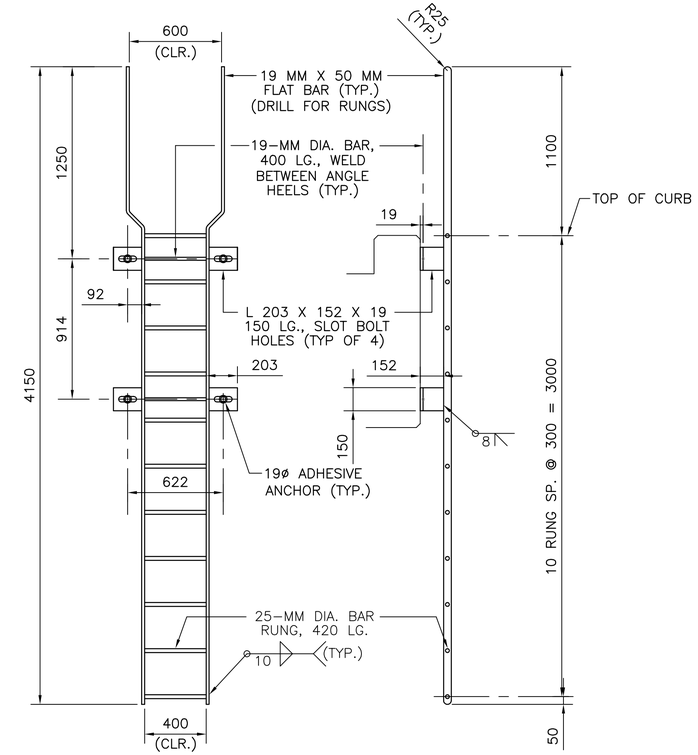

LADDER FABRICATION DETAIL

1:20

B
S-103 S-404
S-406,S-407

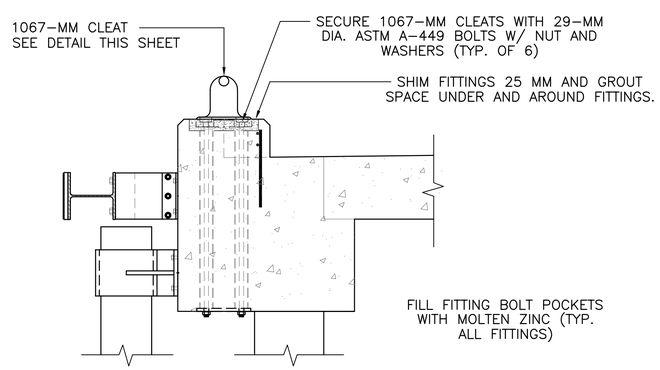

CLEAT INSTALLATION SECTION

1 : 20

GRAPHIC SCALES

1:10 0 100 500 1000mm

1:20 0 500 1000 2000mm

DATE	APPR	DESCRIPTION	STM.

DESIGNED & ENGINEERED BY:
LANTDIV
NAVAL FACILITIES ENGINEERING COMMAND

SEAL

APPROVED

ACTIVITY - SATISFACTORY TO

DATE

APPROVED
J.P. Bowen
FOR EFD FOR COMMANDER NAVFAC
10/02/03

DATE

A/E	EFD
DESIGN	BAE
DRAWN	BAE
REVIEW	RCK
QC	
CHIEF ARCH./ ENGR.	
PROJECT MANAGER	KB
FIRE PROTECTION	
BRANCH MANAGER	
DESIGN DIRECTOR	

DEPARTMENT OF THE NAVY
NAVAL FACILITIES ENGINEERING COMMAND
ATLANTIC DIVISION
NORFOLK, VIRGINIA
NAVAL STATION
NORFOLK, VIRGINIA

SMALL CRAFT BASIN

MISCELLANEOUS FABRICATIONS AND CLEATS

CODE ID. NO. 80091 SIZE D

SCALE: AS NOTED

EFD NO.

STA. PROJ. NO. P-094

SPEC. NO. 05-03-3066

CONSTR. CONTR. NO.
N62470-03-B-3066

NAVFAC DRAWING NO.
4501321

SHEET 84 OF 123

S-404

DRAWFORM REVISION SEPT 2001

FILENAME: 5A0960-S-404.DWG, UPDATED ON 08/05/03 AT 16:01, XREFS: 0960PROJ-INFO

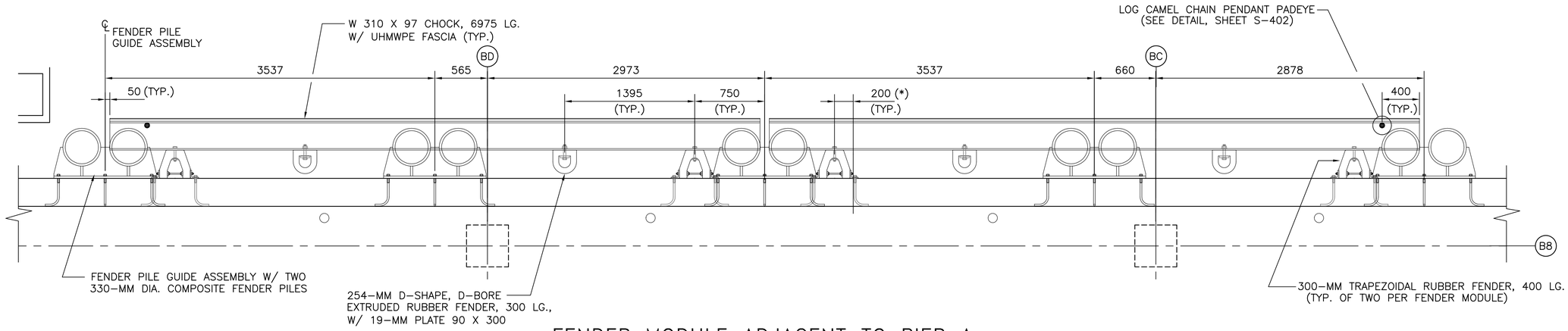

FENDER MODULE ADJACENT TO PIER A

1 : 25

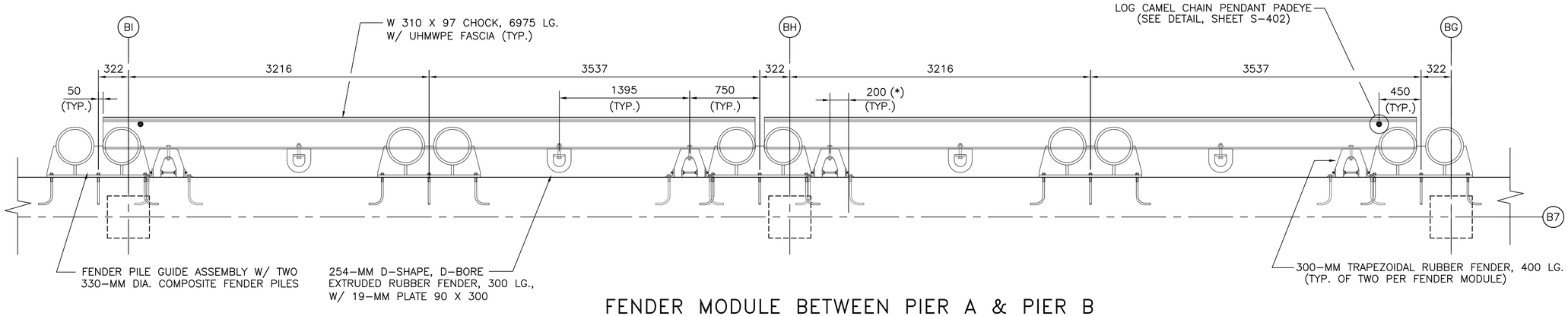

FENDER MODULE BETWEEN PIER A & PIER B

1 : 25

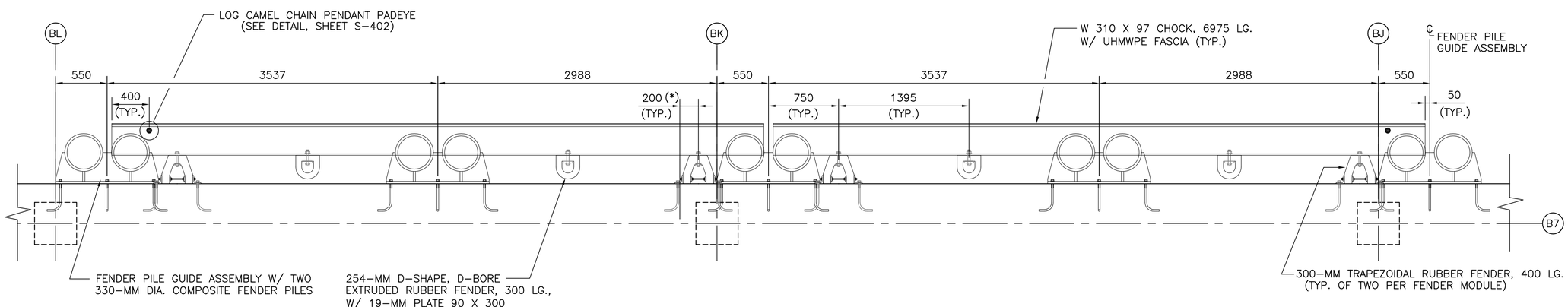

FENDER MODULE BETWEEN PIER B & PIER C

1 : 25

(*) – PROVIDE AND INSTALL 2 CHOCK CHAIN RESTRAINTS PER STEEL CHOCK ASSEMBLY. SEE "CHAIN RESTRAINT DETAIL" ON S-401.

GRAPHIC SCALE

1:25 0 500 1500 2500mm

STM.	DESCRIPTION	DATE	APPR.

DESIGNED & ENGINEERED BY: LANTDIV NAVAL FACILITIES ENGINEERING COMMAND

SEAL

APPROVED

ACTIVITY – SATISFACTORY TO

DATE

APPROVED J.P. Bowen FOR EFD FOR COMMANDER NAVFAC 10/02/03

DATE

A/E	EFD
DESIGN	BAE
DRAWN	BAE
REVIEW	RCK
QC	
CHIEF ARCH./ ENGR.	
PROJECT MANAGER	KB
FIRE PROTECTION	
BRANCH MANAGER	
DESIGN DIRECTOR	

DEPARTMENT OF THE NAVY
NAVAL FACILITIES ENGINEERING COMMAND
ATLANTIC DIVISION
NORFOLK, VIRGINIA
NAVAL STATION
NAVAL STATION NORFOLK, VIRGINIA

SMALL CRAFT BASIN

FENDER SYSTEM DETAILS

CODE ID. NO. 80091 | SIZE D

SCALE: AS NOTED

EFD NO.

STA. PROJ. NO. P-094

SPEC. NO. 05-03-3066

CONSTR. CONTR. NO. N62470-03-B-3066

NAVFAC DRAWING NO. 4501322

SHEET 85 OF 123

S-405

DRAWFORM REVISION SEPT 2001

FILENAME: 5A0960-S-405.DWG, UPDATED ON 09/15/03 AT 08:32, XREFS: MASTER, 0960PROJ-INFO

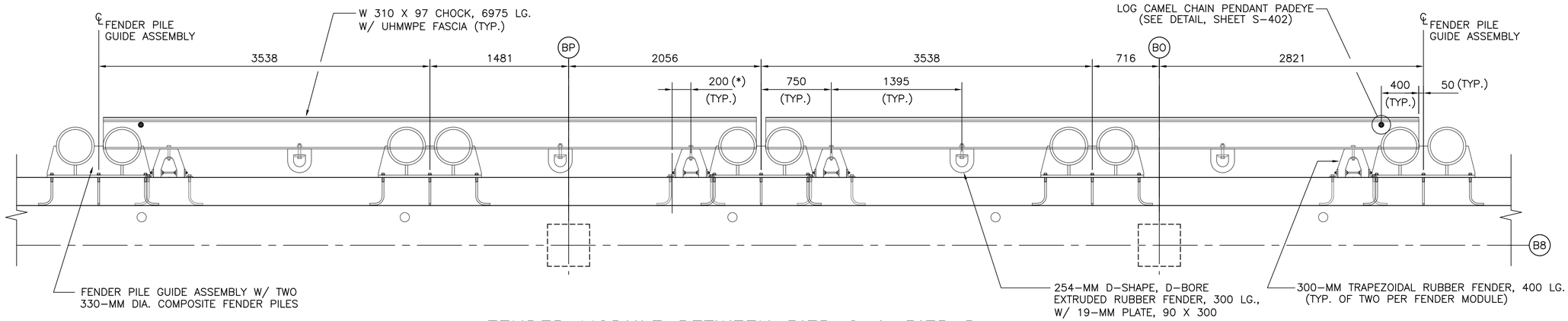

FENDER MODULE BETWEEN PIER C & PIER D

1:25

(*) – PROVIDE AND INSTALL 2 CHOCK CHAIN RESTRAINTS PER STEEL CHOCK ASSEMBLY. SEE "CHAIN RESTRAINT DETAIL" ON S-401.

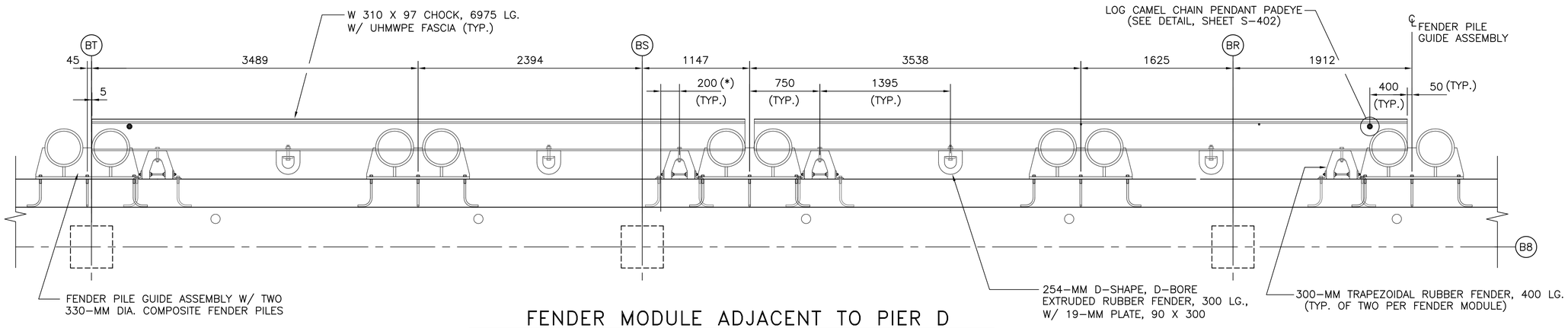

FENDER MODULE ADJACENT TO PIER D

1:25

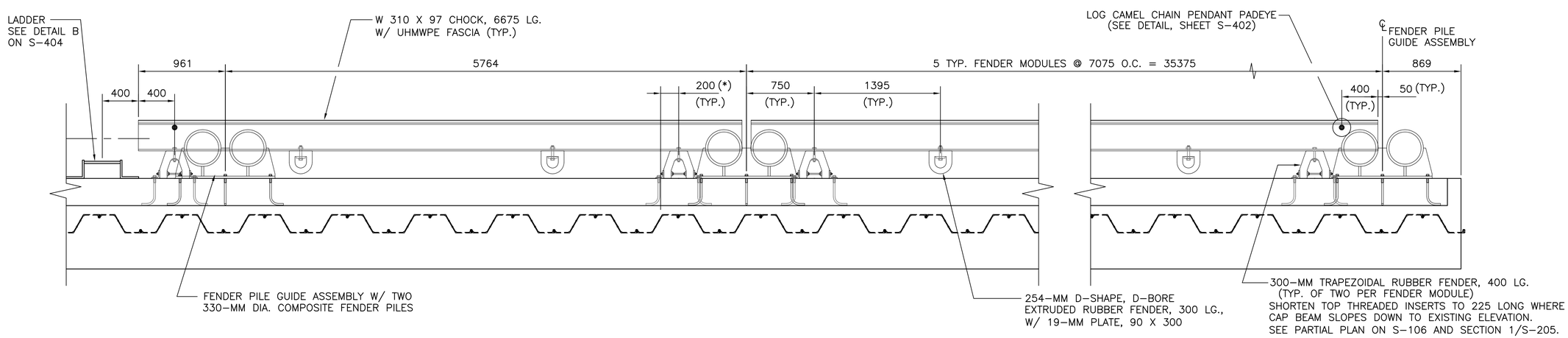

FENDER MODULES ALONG BULKHEAD AT AREA C

1:25

GRAPHIC SCALE

1:25 0 500 1500 2500mm

APPR	DATE	DESCRIPTION	STM.

DESIGNED & ENGINEERED BY: LANTDIV NAVAL FACILITIES ENGINEERING COMMAND

SEAL

APPROVED

ACTIVITY – SATISFACTORY TO

DATE

APPROVED J.P. Bowen FOR EFD FOR COMMANDER NAVFAC 10/02/03

DATE

A/E	EFD
DESIGN	BAE
DRAWN	BAE
REVIEW	RCK
QC	
CHIEF ARCH./ ENGR.	
PROJECT MANAGER	KB
FIRE PROTECTION	
BRANCH MANAGER	
DESIGN DIRECTOR	

DEPARTMENT OF THE NAVY
NAVAL FACILITIES ENGINEERING COMMAND
ATLANTIC DIVISION
NORFOLK, VIRGINIA
NAVAL STATION
NAVAL STATION NORFOLK, VIRGINIA

SMALL CRAFT BASIN

FENDER SYSTEM DETAILS

CODE ID. NO. 80091 | SIZE D

SCALE: AS NOTED

EFD NO.

STA. PROJ. NO. P-094

SPEC. NO. 05-03-3066

CONSTR. CONTR. NO. N62470-03-B-3066

NAVFAC DRAWING NO. 4501323

SHEET 86 OF 123

S-406

DRAWFORM REVISION SEPT 2001

FILENAME: 5A0960-S-406.DWG, UPDATED ON 09/24/03 AT 08:46, XREFS: MASTER, 0960PROJ-INFO

NOTES

1. SEE SHEET S-401 FOR TYPICAL FENDER MODULE.
2. PROVIDE AND INSTALL 2 CHOCK CHAIN RESTRAINTS PER STEEL CHOCK ASSEMBLY. SEE "CHAIN RESTRAINT DETAIL", ON SHEET S-401. LOCATE AS SHOWN ON TYPICAL FENDER MODULE.

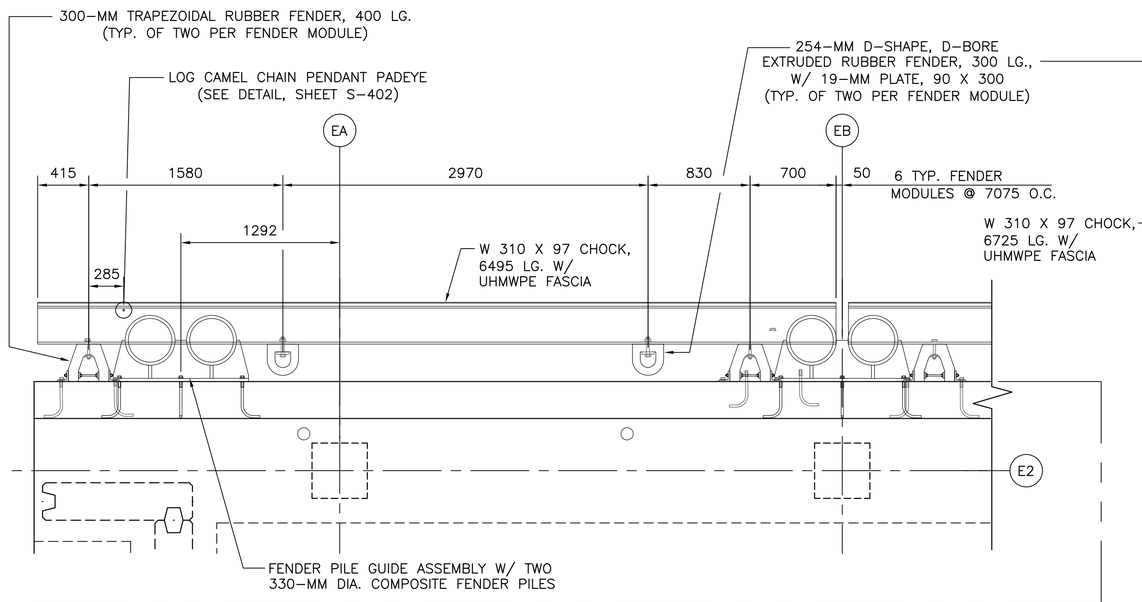

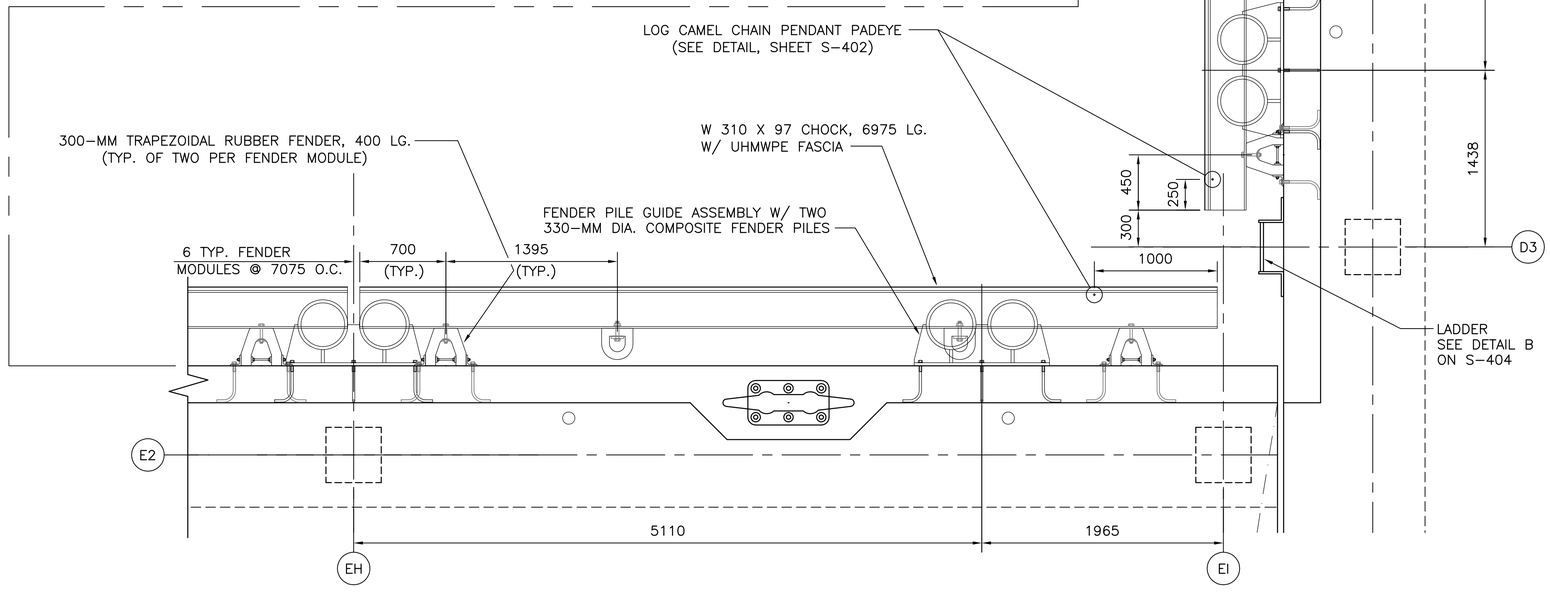

FENDER ALONG AREAS "D" & "E"
1 : 25

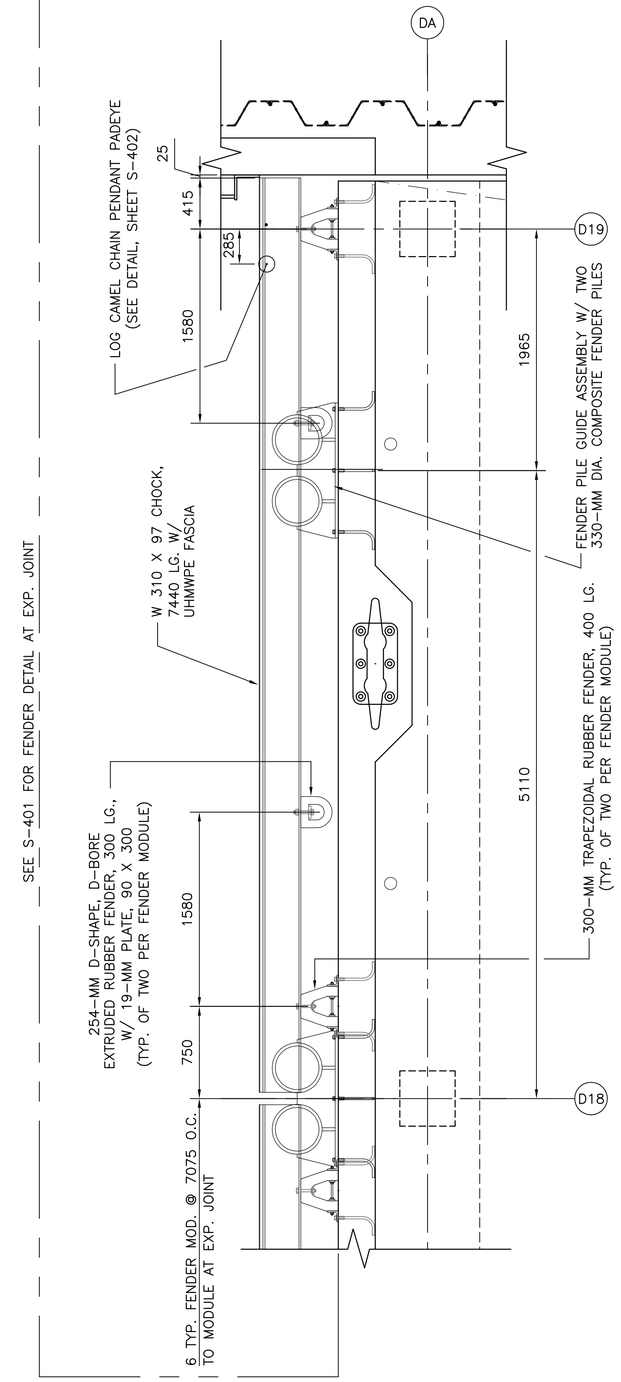

GRAPHIC SCALE
1:25 0 500 1500 2500mm

	DATE	APPR
	DESCRIPTION	
	STAL	

DESIGNED & ENGINEERED BY: LANTDIV NAVAL FACILITIES ENGINEERING COMMAND

SEAL

APPROVED

ACTIVITY – SATISFACTORY TO

DATE

APPROVED J.P. Bowen FOR EFD FOR COMMANDER NAVFAC 10/02/03

DATE

A/E	EFD
DESIGN	BAE
DRAWN	BAE
REVIEW	RCK
QC	
CHIEF ARCH./ ENGR.	
PROJECT MANAGER	KB
FIRE PROTECTION	
BRANCH MANAGER	
DESIGN DIRECTOR	

DEPARTMENT OF THE NAVY
NAVAL STATION
NAVAL FACILITIES ENGINEERING COMMAND
ATLANTIC DIVISION
NORFOLK, VIRGINIA
NORFOLK, VIRGINIA

SMALL CRAFT BASIN

FENDER SYSTEM DETAILS

CODE ID. NO. 80091 | SIZE D

SCALE: AS NOTED

EFD NO.

STA. PROJ. NO. P-094

SPEC. NO. 05-03-3066

CONSTR. CONTR. NO. N62470-03-B-3066

NAVFAC DRAWING NO. 4501324

SHEET 87 OF 123

S-407

DRAWFORM REVISION MAY 2000

FILENAME: 5A0960-S-407.DWG, UPDATED ON 09/24/03 AT 08:27, XREFS: MASTER, 8151-ST, 0960PROJ-INFO

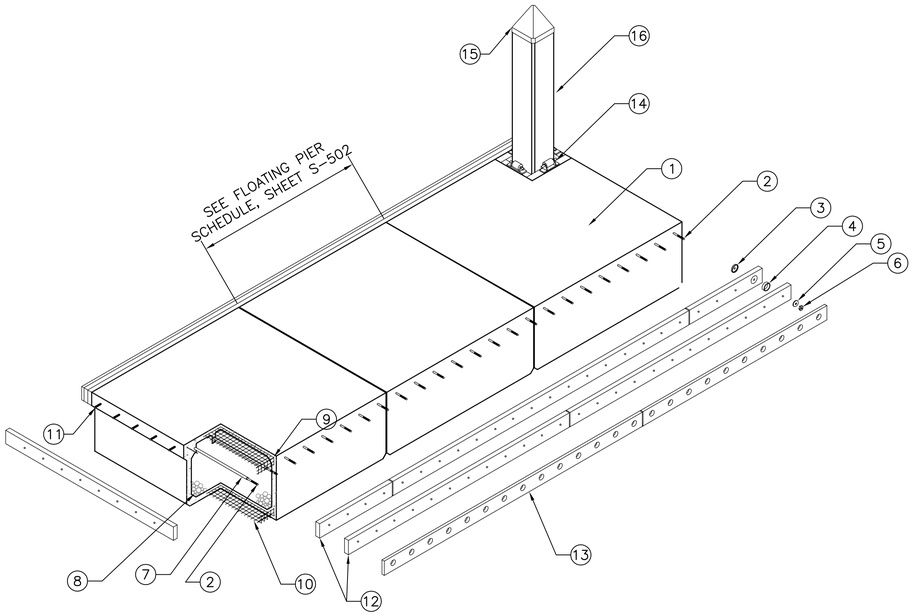

KEY NOTES:

1. CONCRETE FLOATING PIER. SEE FLOATING PIER SCHEDULE, SHEET S-502. FOR DIMENSIONS.
2. GALVANIZED STEEL THRU RODS, 19MMø, QUANTITY AS REQUIRED BY DESIGN.
3. GALVANIZED 100MM SHEAR PLATE AS REQUIRED BY DESIGN.
4. GALVANIZED 100MM SPLIT RING AS REQUIRED BY DESIGN.
5. GALVANIZED HEAVY DUTY FLAT WASHER, TYPICAL AT EACH THRU ROD.
6. GALVANIZED HEX NUT, TYPICAL AT EACH THRU ROD.
7. PVC THRU ROD TUBE.
8. SOLID POLYSTYRENE CORE.
9. GALVANIZED REBAR AS REQUIRED BY DESIGN.
10. GALVANIZED WELDED WIRE FABRIC AS REQUIRED BY DESIGN.
11. STAINLESS STEEL 19MMø STUDS W/ FERRULE LOOP INSERTS AS REQUIRED.
12. TIMBER WALER SYSTEM, SIZED BY DESIGN.
13. UHMWP RUBSTRIP.
14. GALVANIZED PILE GUIDE W/ UHMWP ROLLERS OR RUB PADS.
15. WHITE PVC PILE CAP.
16. PRECAST PRESTRESSED CONCRETE GUIDE PILE, SIZE AS REQUIRED BY DESIGN.

TYPICAL FLOATING PIER CONSTRUCTION

NTS

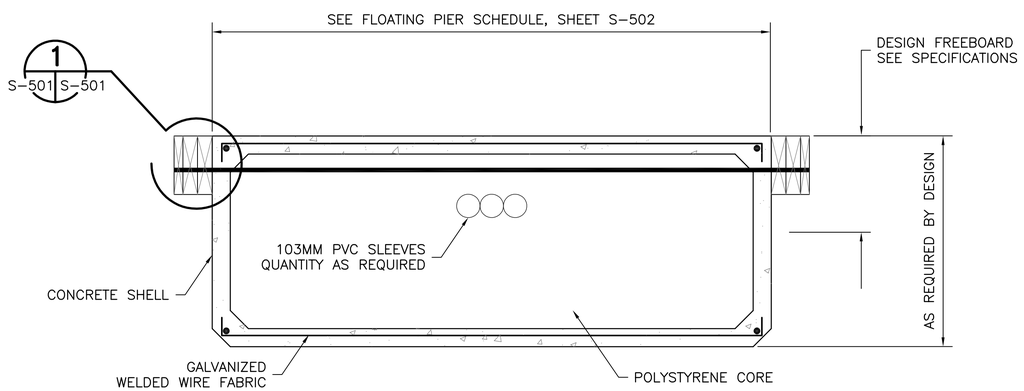

TYPICAL FLOATING PIER CROSS SECTION

NTS

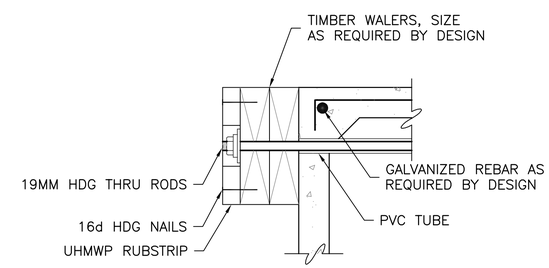

DETAIL 1

NTS

S-501 S-501

			APPR
			DATE
		DESCRIPTION	
			STAL

DESIGNED & ENGINEERED BY:
LANTDIV
NAVAL FACILITIES ENGINEERING COMMAND

SEAL

APPROVED

ACTIVITY – SATISFACTORY TO

DATE

APPROVED
J P Bowen
FOR EFD FOR COMMANDER NAVFAC
10/02/03

DATE

A/E		EFD
	DESIGN	BAE
	DRAWN	BAE
	REVIEW	RCK
	QC	
	CHIEF ARCH./ ENGR.	
PROJECT MANAGER		KB
FIRE PROTECTION		
BRANCH MANAGER		
DESIGN DIRECTOR		

DEPARTMENT OF THE NAVY
NAVAL STATION
NAVAL STATION
NORFOLK, VIRGINIA
ATLANTIC DIVISION
NAVAL FACILITIES ENGINEERING COMMAND
NORFOLK, VIRGINIA

SMALL CRAFT BASIN

FLOATING PIER SECTIONS AND DETAILS

CODE ID. NO. 80091 | SIZE D

SCALE: AS NOTED

EFD NO.

STA. PROJ. NO. P-094

SPEC. NO. 05-03-3066

CONSTR. CONTR. NO.
N62470-03-B-3066

NAVFAC DRAWING NO.
4501325

SHEET 88 OF 123

S-501

DRAWFORM REVISION MAY 2000

FILENAME: 5A0960-S-501.DWG, UPDATED ON 09/23/03 AT 13:10, XREFS: 0960PROJ-INFO

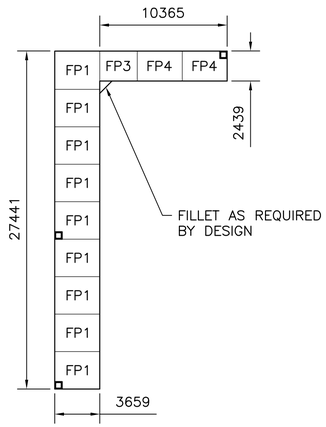

FUELING PIER
1 : 250

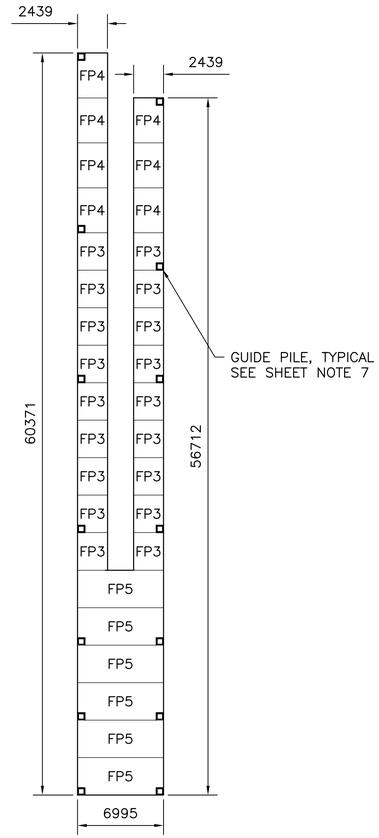

PIER A AND PIER C (OPP. HAND)
1 : 250

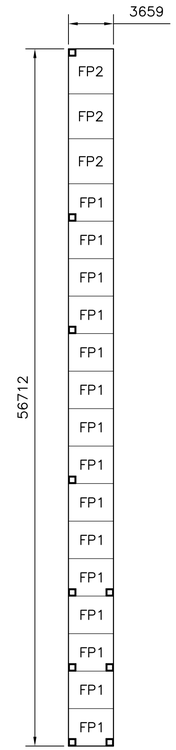

PIER B
1 : 250

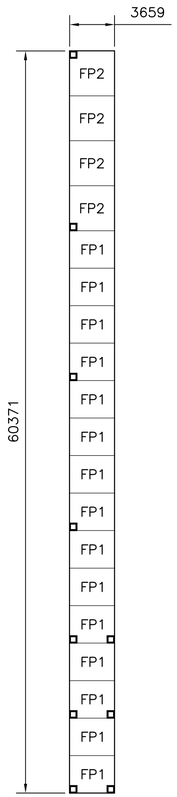

PIER D
1 : 250

MODULE MARK	WIDTH	LENGTH
FP1	3659	3049
FP2	3659	3659
FP3	2439	3049
FP4	2439	3659
FP5	6995	3049

FLOATING PIER SCHEDULE

DESIGN DATA:

1. LIVE LOAD (PIER & GANGWAY) -- 3.83 KPa (80 PSF)
2. WIND SPEED -- 49.17 M/s (110 MPH)
3. BERTHING LOAD -- 136 N/M (100 PLF)
4. MOORING LOAD -- 1.78 KN (400 LB)
5. WAVE HEIGHT -- 900 MM (3 FT)
6. DESIGN TIDES:
   A. EXTREME HIGH WATER -- 2.942 M (9.65 FT)
   B. MEAN HIGH WATER -- 0.930 M (3.05 FT)
   C. MEAN LOW WATER -- 0.167 M (0.55 FT)
   D. EXTREME LOW WATER -- 0.777 M (2.55 FT)
7. GUIDE PILES TO BE DESIGNED IN ACCORDANCE WITH SPECIFICATIONS. FOR BIDDING PURPOSES, ASSUME:
   A. GUIDE PILES ARE AT LOCATIONS AS SHOWN.
   B. AVERAGE LENGTH IS 20 METERS.
   C. 457MM PRECAST PRESTRESSED CONCRETE.

   ACTUAL SIZE AND LENGTH MAY VARY AND SHALL BE AS DETERMINED BY THE SUBMITTED AND APPROVED DESIGN. IF THE FINAL SIZES AND QUANTITIES VARY FROM THE ABOVE NOTED ASSUMPTIONS, AN ADJUSTMENT TO THE CONTRACT WILL BE MADE IN ACCORDANCE WITH THE SPECIFICATIONS.

GRAPHIC SCALE
1:250 0 5 10 15 20 25m

SYM.	DESCRIPTION	DATE	APPR

DESIGNED & ENGINEERED BY:
LANTDIV
NAVAL FACILITIES ENGINEERING COMMAND

SEAL

APPROVED
ACTIVITY – SATISFACTORY TO
DATE
APPROVED
J P Bowen
FOR EFD FOR COMMANDER NAVFAC
10/02/03
DATE

A/E	EFD
DESIGN	BAE
DRAWN	BAE
REVIEW	RCK
QC	
CHIEF ARCH./ ENGR.	
PROJECT MANAGER	KB
FIRE PROTECTION	
BRANCH MANAGER	
DESIGN DIRECTOR	

DEPARTMENT OF THE NAVY
NAVAL STATION
NAVAL STATION NORFOLK, VIRGINIA
ATLANTIC DIVISION
NAVAL FACILITIES ENGINEERING COMMAND
NORFOLK, VIRGINIA

SMALL CRAFT BASIN
FLOATING PIER LAYOUT

CODE ID. NO. 80091 | SIZE D
SCALE: AS NOTED
EFD NO.
STA. PROJ. NO. P-094
SPEC. NO. 05-03-3066
CONSTR. CONTR. NO.
N62470-03-B-3066
NAVFAC DRAWING NO.
4501326
SHEET 89 OF 123
S-502
DRAWFORM REVISION MAY 2000

FILENAME: 5A0960-S-502.DWG, UPDATED ON 09/23/03 AT 14:25, XREFS: MASTER, 0960PROJ-INFO

SHEET NOTES:

1. GANGWAY SHALL BE DESIGNED IN ACCORDANCE WITH THE SPECIFICATIONS.
2. GANGWAY ATTACHMENT TO RELIEVING PLATFORM SHALL BE DESIGNED BY THE MANUFACTURER IN ACCORDANCE WITH THE SPECIFICATIONS.

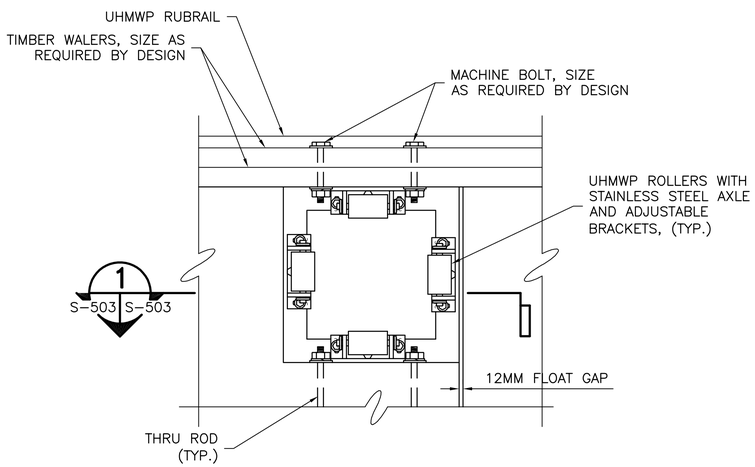

TYPICAL NOTCHED PILE GUIDE
NTS

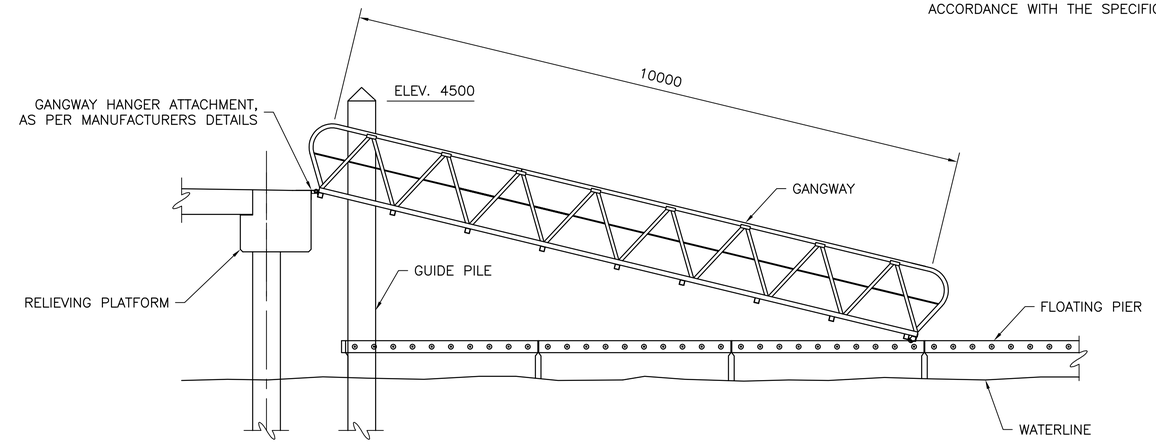

TYPICAL GANGWAY LAYOUT
NTS

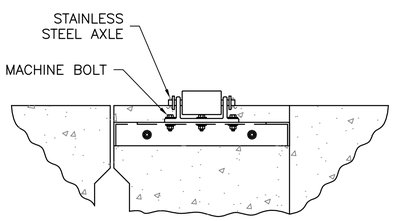

SECTION 1
NTS
S-503 S-503

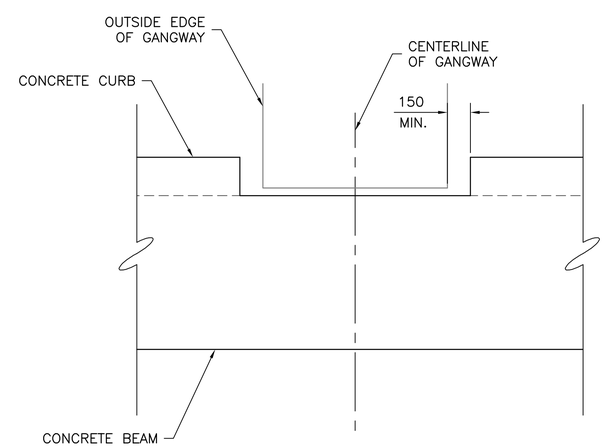

TYPICAL CURB AT GANGWAY
1 : 20

GRAPHIC SCALE
1:20 0 500 1000 2000mm

	DATE	APPR
	DESCRIPTION	
	STM.	

DESIGNED & ENGINEERED BY:
LANTDIV
NAVAL FACILITIES ENGINEERING COMMAND

SEAL

APPROVED
ACTIVITY – SATISFACTORY TO
DATE
APPROVED
J P Bowen
FOR EFD FOR COMMANDER NAVFAC
10/02/03

DATE	A/E	EFD
	DESIGN	BAE
	DRAWN	BAE
	REVIEW	RCK
	QC	
	CHIEF ARCH./ ENGR.	
	PROJECT MANAGER	KB
	FIRE PROTECTION	
	BRANCH MANAGER	
	DESIGN DIRECTOR	

DEPARTMENT OF THE NAVY
NAVAL STATION
NAVAL FACILITIES ENGINEERING COMMAND
ATLANTIC DIVISION
NORFOLK, VIRGINIA
NAVAL STATION
NORFOLK, VIRGINIA
SMALL CRAFT BASIN
PILE GUIDE AND GANGWAY DETAILS

CODE ID. NO. 80091 | SIZE D
SCALE: AS NOTED
EFD NO.
STA. PROJ. NO. P-094
SPEC. NO. 05-03-3066
CONSTR. CONTR. NO.
N62470-03-B-3066
NAVFAC DRAWING NO.
4501327
SHEET 90 OF 123
S-503

DRAWFORM REVISION MAY 2000

FILENAME: 5A0960-S-503.DWG, UPDATED ON 08/19/03 AT 13:39, XREFS: 0960PROJ-INFO

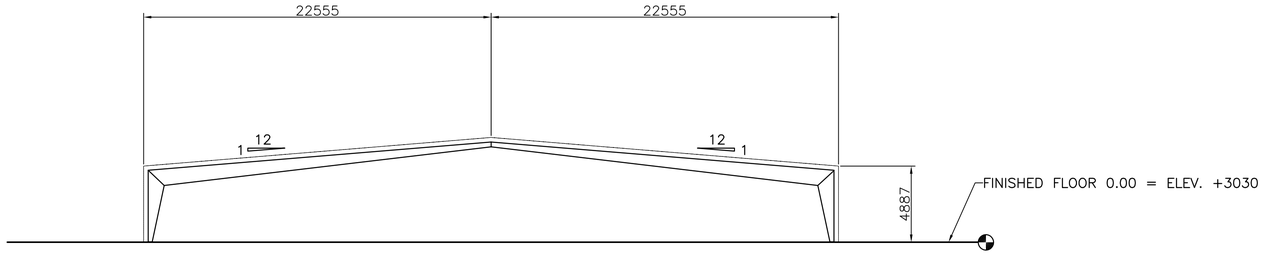

RIGID FRAME

1 : 200

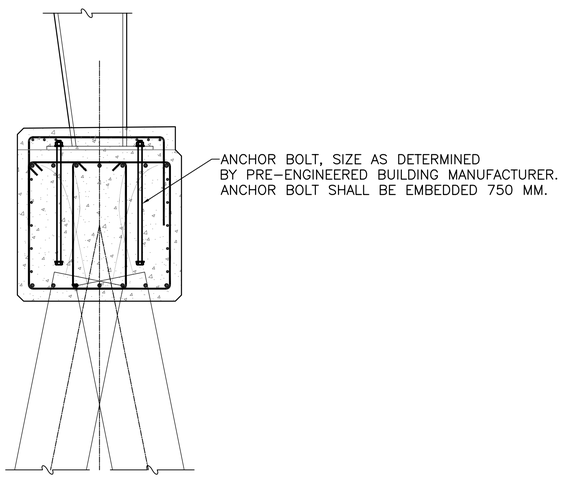

ANCHOR BOLT DETAIL

NTS

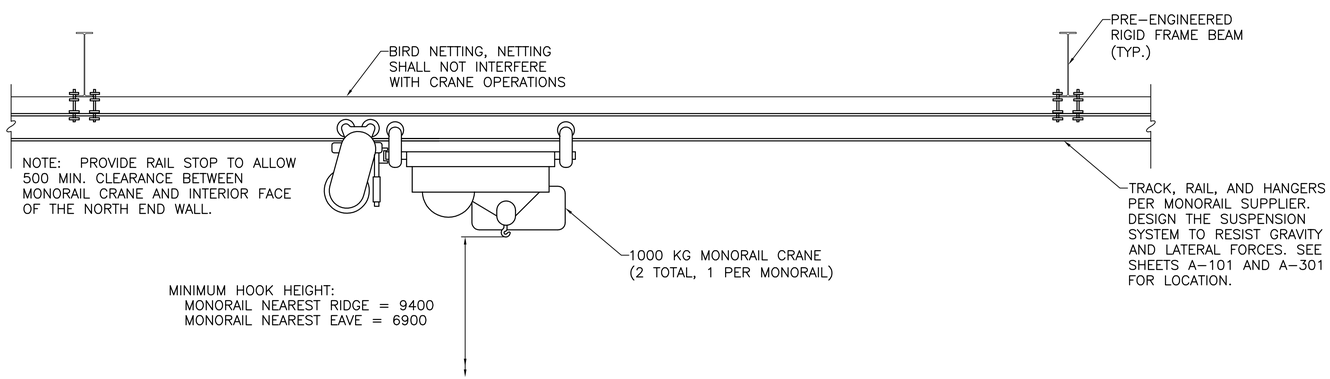

1000 KG MONORAIL DETAIL

NTS

PRE-ENGINEERED BUILDING NOTES:

1. THE CONTRACTOR SHALL SUBMIT SHOP DRAWINGS AND A COMPLETE STRUCTURAL DESIGN ANALYSIS OF THE METAL BUILDING SYSTEM, INCLUDING ANCHOR BOLT LAYOUT AND FOUNDATION REACTIONS. SHOP DRAWING SHALL BEAR THE SEAL OF A PROFESSIONAL ENGINEER. SHOP DRAWING APPROVAL SHALL BE OBTAINED PRIOR TO PLACING ANY FOUNDATIONS OR FABRICATION OF FOUNDATION REINFORCING STEEL.
2. DESIGN LOADS USED IN CONNECTION WITH THE PRE-ENGINEERED BUILDING DESIGN ARE AS FOLLOWS:

ROOF LIVE LOAD:	950 Pa
ROOF DEAD LOAD:	WEIGHT OF ALL EQUIPMENT INDICATED ON DRAWINGS, PLUS WEIGHT OF ROOF SYSTEM, PLUS
CRANE LOAD:	A COLLATERAL EQUIPMENT WEIGHT OF 240 Pa 1000 KG CAPACITY MONORAIL, GRAVITY AND LATERAL
WIND LOAD:	LOADING EFFECTS SHALL BE CONSIDERED UFC 1-200-1, 3 SECOND WIND SPEED 49 M/S,
SEISMIC LOAD:	EXPOSURE D, IMPORTANCE FACTOR 1.0 UFC 1-200-1, Ss=0.15, S1=0.06

3. THE PRE-ENGINEERED BUILDING COLUMNS SHALL HAVE PINNED BASES AND SHALL TRANSFER NO MOMENTS TO THE FOUNDATIONS. THE EDGE OF THE COLUMN BASE PLATE SHALL NOT EXTEND BEYOND THE BOUNDARIES OF THE STRUCTURAL PILE CAP.
4. THE FOUNDATIONS HAVE BEEN DESIGNED FOR THE MAXIMUM CRITICAL COLUMN REACTIONS INDICATED. IF THE REACTIONS OF THE STRUCTURE ACTUALLY PROVIDED EXCEED THE INDICATED REACTIONS BY 10% OR MORE THE CONTRACTOR SHALL OBTAIN THE SERVICES OF AN ENGINEER TO REDESIGN THE FOUNDATIONS.
5. BRACE PRE-ENGINEERED BUILDING BETWEEN COLUMN LINES B2-B3 & B5-B6.
6. ANCHOR RODS FOR END WALL COLUMN BASE PLATES SHALL BE DRILLED INTO PRECAST SLAB AND SHALL NOT EXCEED 250 EMBEDMENT. COORDINATE LOCATION OF ANCHOR RODS WITH PRE-ENGINEERED BUILDING MANUFACTURER. ANCHOR ROD MATERIAL SHALL BE COMPATIBLE WITH END WALL COLUMN BASE PLATE MATERIAL. CONTRACTOR SHALL INSURE ANCHORING SYSTEM CHOSEN HAS REQUIRED CAPACITY TO RESIST LOADS ON ANCHOR RODS AS PROVIDED BY PRE-ENGINEERED BUILDING MANUFACTURER.

MAXIMUM COLUMN REACTIONS

COLUMNS	UNFACTORED REACTION(S) (kN)
RIGID FRAME	UPLIFT = 178 LATERAL = 289 GRAVITY = 178

GRAPHIC SCALE

1:200 0 5 10 15 20m

SYM.	DESCRIPTION	DATE	APPR.

DESIGNED & ENGINEERED BY:
LANTDIV
NAVAL FACILITIES ENGINEERING COMMAND

SEAL

APPROVED

ACTIVITY – SATISFACTORY TO

DATE

APPROVED
J P Bowen
FOR EFD FOR COMMANDER NAVFAC
10/02/03

DATE

A/E	EFD
DESIGN	BAE
DRAWN	BAE
REVIEW	RCK
QC	
CHIEF ARCH./ ENGR.	
PROJECT MANAGER	KB
FIRE PROTECTION	
BRANCH MANAGER	
DESIGN DIRECTOR	

DEPARTMENT OF THE NAVY
NAVAL FACILITIES ENGINEERING COMMAND
ATLANTIC DIVISION
NAVAL STATION NORFOLK, VIRGINIA
NAVAL STATION NORFOLK, VIRGINIA

SMALL CRAFT BASIN

PREENGINEERED BOAT SHED

CODE ID. NO. 80091 SIZE D

SCALE: AS NOTED

EFD NO.

STA. PROJ. NO. P-094

SPEC. NO. 05-03-3066

CONSTR. CONTR. NO.
N62470-03-B-3066

NAVFAC DRAWING NO.
4501328

SHEET 91 OF 123

S-601

DRAWFORM REVISION SEPT 2001

FILENAME: 5A0960-S-601.DWG, UPDATED ON 09/24/03 AT 11:57, XREFS: 0960PROJ-INFO

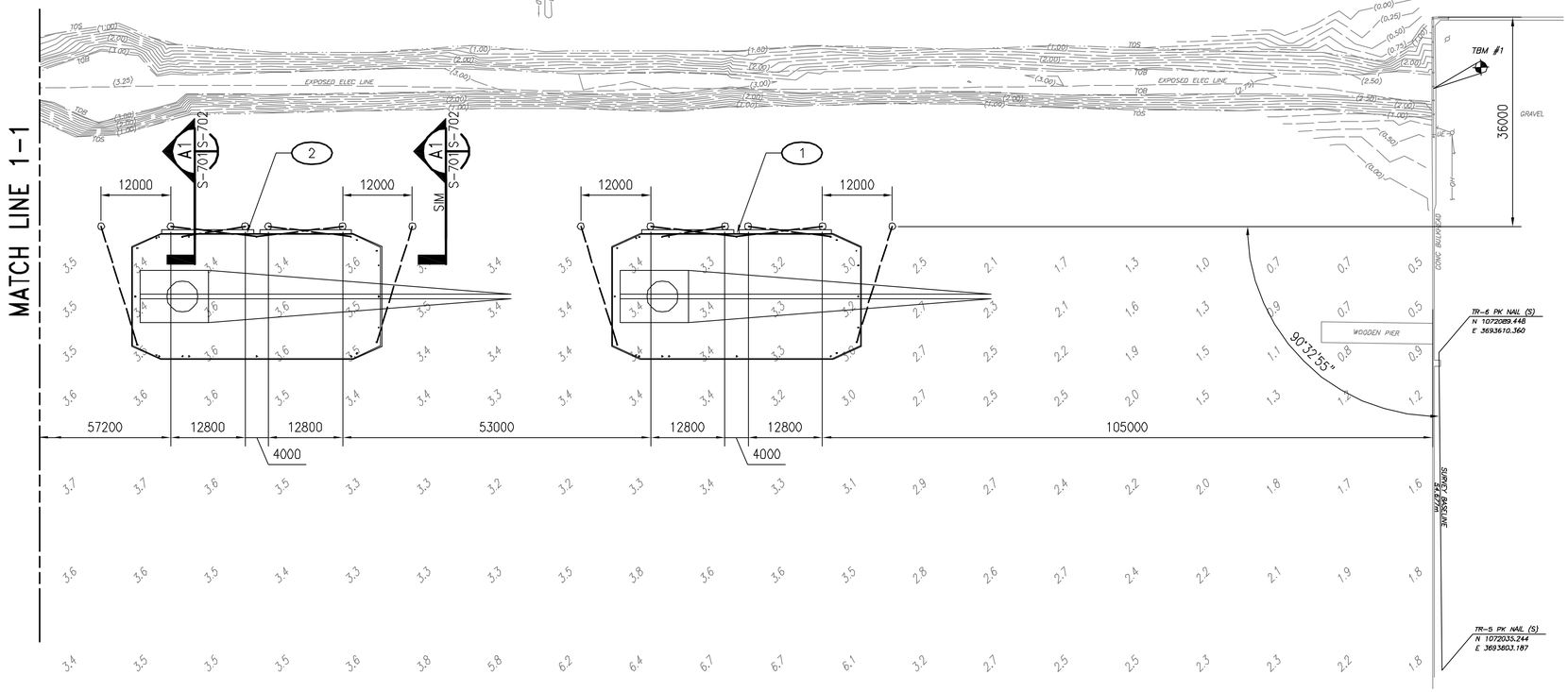

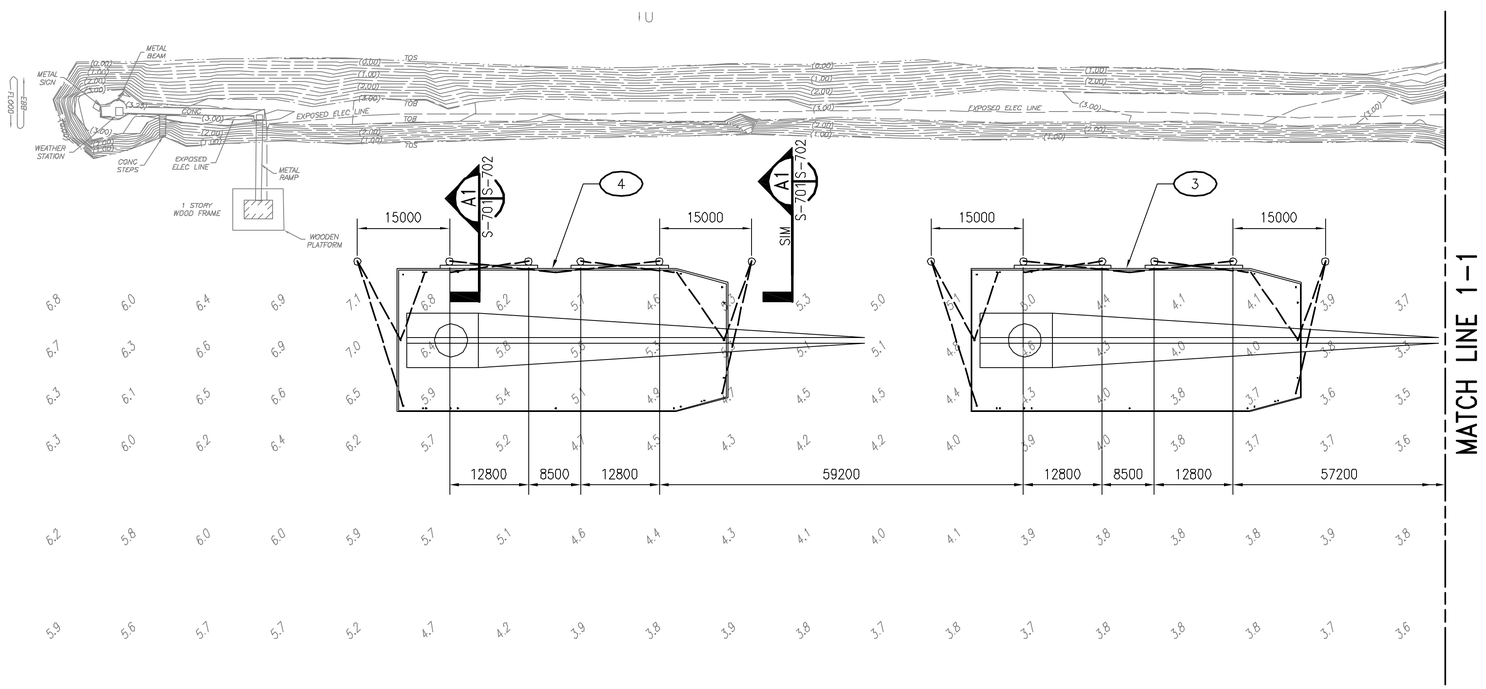

PLAN – NORTH BREAKWATER BERTHING DOLPHINS

SCALE = 1:500

NOTES

1. SOUNDINGS SHOWN ARE OF APPROXIMATE DEPTH AND LOCATION AND REFERENCE MLLW 0.00. MLLW IS 0.201 M ABOVE SLWD.

KEY NOTES

(1) **DRAVO YD-200**
LENGTH = 42.67 M
BEAM = 21.34 M
DRAFT = 1.68 M

(2) **DRAVO YD-217**
LENGTH = 42.67 M
BEAM = 21.34 M
DRAFT = 1.68 M

(3) **WESTMONT YD-249**
LENGTH = 53.34 M
BEAM = 22.86 M
DRAFT = 2.13 M

(4) **WESTMONT YD-250**
LENGTH = 53.34 M
BEAM = 22.86 M
DRAFT = 2.13 M

GRAPHIC SCALE:

1:500 0 10 20 30 40 50m

SYM.	DESCRIPTION	DATE	APPR

TRANSYSTEMS CORPORATION
Town Point Center
150 Boush Street ~ Suite 1000
Norfolk ~ Virginia ~ USA
23510-1638
Phone 757-627-1112
Fax 757-627-1113
www.transystems.com

COMMONWEALTH OF VIRGINIA
ROBERT DUKE SNYDER
No.034620
9/25/03
PROFESSIONAL ENGINEER
SEAL

APPROVED
ACTIVITY – SATISFACTORY TO
DATE
APPROVED
J P Bowen
FOR EFD FOR COMMANDER NAVFAC
10/02/03
DATE

A/E		EFD
RDS	DESIGN	
MFW	DRAWN	
JE	REVIEW	pch
RCI	QC	
WSW	CHIEF ARCH./ ENGR.	

PROJECT MANAGER
FIRE PROTECTION
BRANCH MANAGER
DESIGN DIRECTOR

DEPARTMENT OF THE NAVY
NAVAL FACILITIES ENGINEERING COMMAND
ATLANTIC DIVISION
NORFOLK, VIRGINIA
NAVAL STATION
NAVAL STATION
NORFOLK, VIRGINIA

SMALL CRAFT BASIN

PLAN – NORTH BREAKWATER BERTHING DOLPHINS

CODE ID. NO. 80091 | SIZE D
SCALE: AS NOTED
EFD NO.
STA. PROJ. NO. P-094
SPEC. NO. 05-03-3066
CONSTR. CONTR. NO.
N62470-03-B-3066
NAVFAC DRAWING NO.
4501329
SHEET 92 OF 123

S-701

DRAWFORM REVISION SEPT 2001

P307028151 UPDATED: 09/23/03

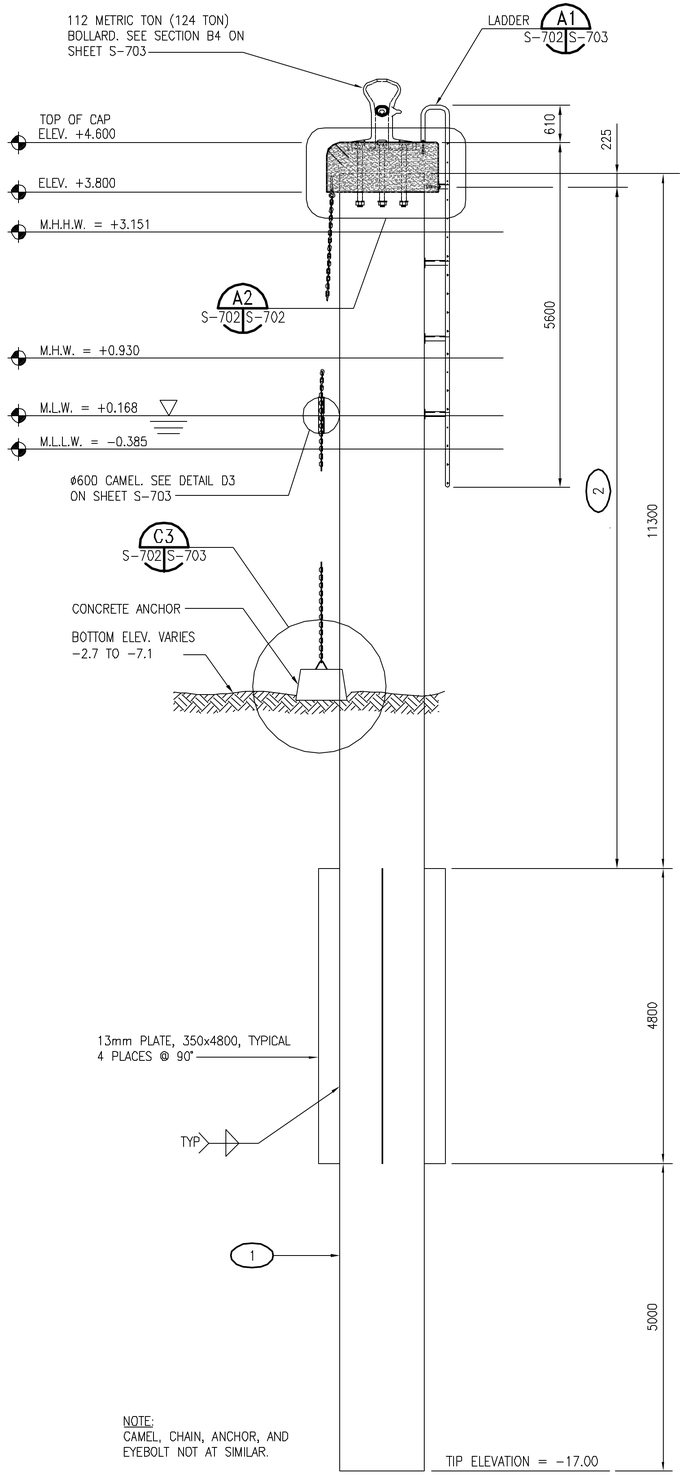

A1 S-701 S-702 S-702 **SECTION**
SCALE = 1:50

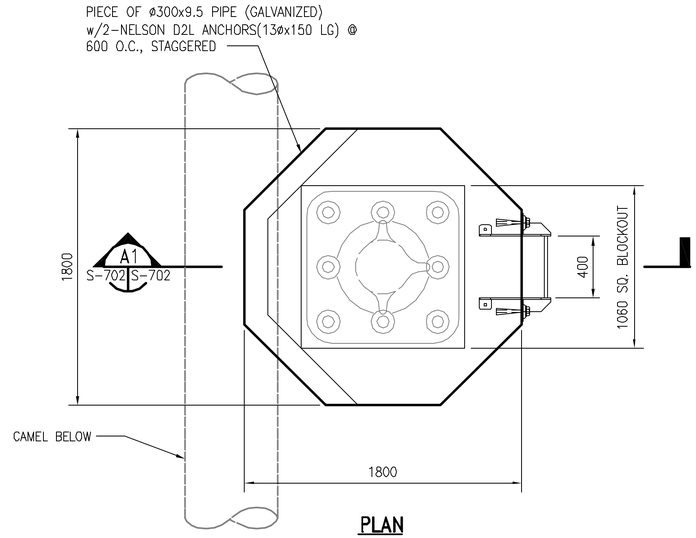

PLAN

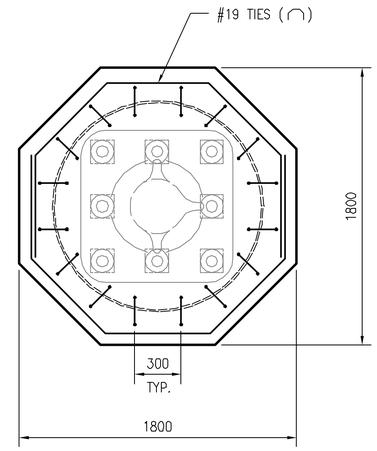

SECTION 1-1

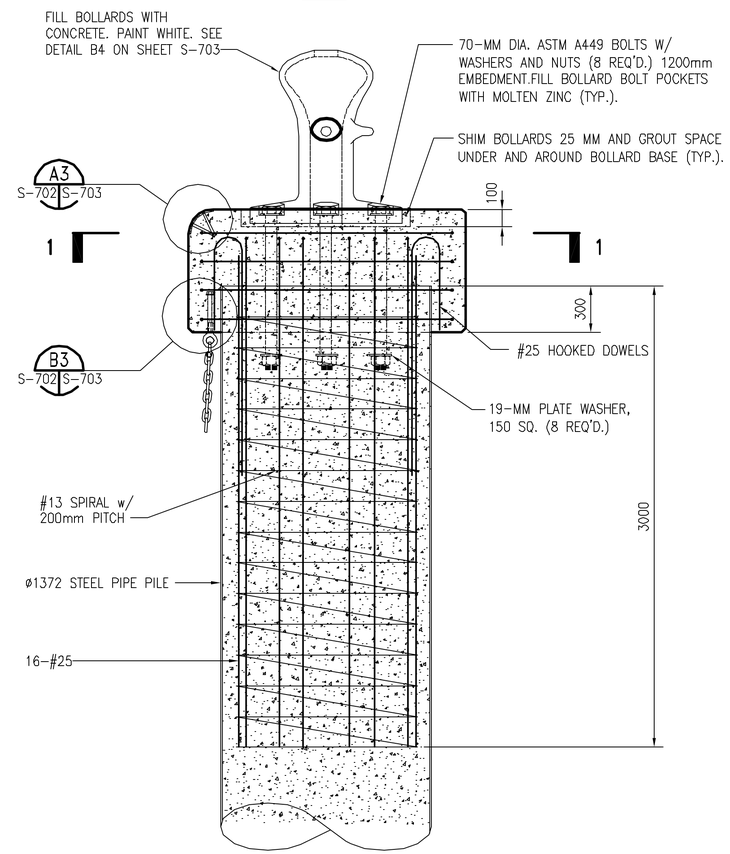

SECTION

A2 S-702 S-702 **DETAIL**
SCALE = 1:20

KEY NOTES:

1. 1372mm OUTSIDE DIAMETER, 13mm THICK, STEEL PIPE PILE.
2. COAT ALL EXTERNAL STEEL PIPE PILE SURFACES WITH 0.8mm COAL TAR EPOXY.

GRAPHIC SCALE:

1:50 — 0 500 1000 2000 5000

1:20 — 0 200 400 1000 2000

SYM.	DESCRIPTION	DATE	APPR

TRANSYSTEMS CORPORATION
Town Point Center
150 Boush Street ~ Suite 1000
Norfolk ~ Virginia ~ USA
23510-1638
Phone 757-627-1112
Fax 757-627-1113
www.transystems.com

COMMONWEALTH OF VIRGINIA — ROBERT DUKE SNYDER No.034620 — 9/25/03 — PROFESSIONAL ENGINEER — SEAL

APPROVED
ACTMTY - SATISFACTORY TO
DATE
APPROVED J.P. Bowen FOR EFD FOR COMMANDER NAVFAC 10/02/03
DATE

A/E		EFD
RDS	DESIGN	
MFW	DRAWN	
JE	REVIEW	RCI
RCI	QC	
WSW	CHIEF ARCH./ ENGR.	

PROJECT MANAGER
FIRE PROTECTION
BRANCH MANAGER
DESIGN DIRECTOR

DEPARTMENT OF THE NAVY
NAVAL FACILITIES ENGINEERING COMMAND
ATLANTIC DIVISION
NAVAL STATION NORFOLK, VIRGINIA
NAVAL STATION NORFOLK, VIRGINIA
SMALL CRAFT BASIN
DETAILS

CODE ID. NO. 80091 | SIZE D
SCALE: AS NOTED
EFD NO.
STA. PROJ. NO. P-094
SPEC. NO. 05-03-3066
CONSTR. CONTR. NO. N62470-03-B-3066
NAVFAC DRAWING NO. 4501330
SHEET 93 OF 123
S-702

DRAWFORM REVISION SEPT 2001

P307028151 UPDATED: 09/23/03

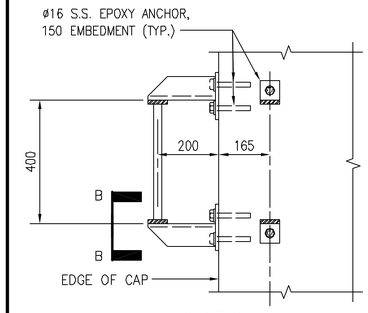

SECTION A – A
NOT TO SCALE

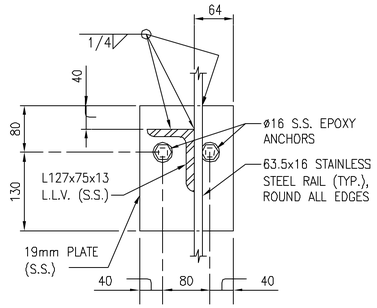

SECTION B–B
NOT TO SCALE

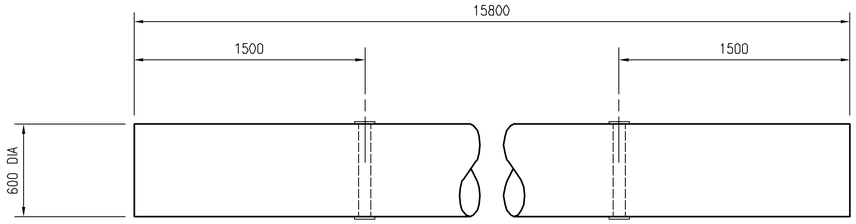

D3 S-702 S-703 **DETAIL – CAMEL**
SCALE = 1:20

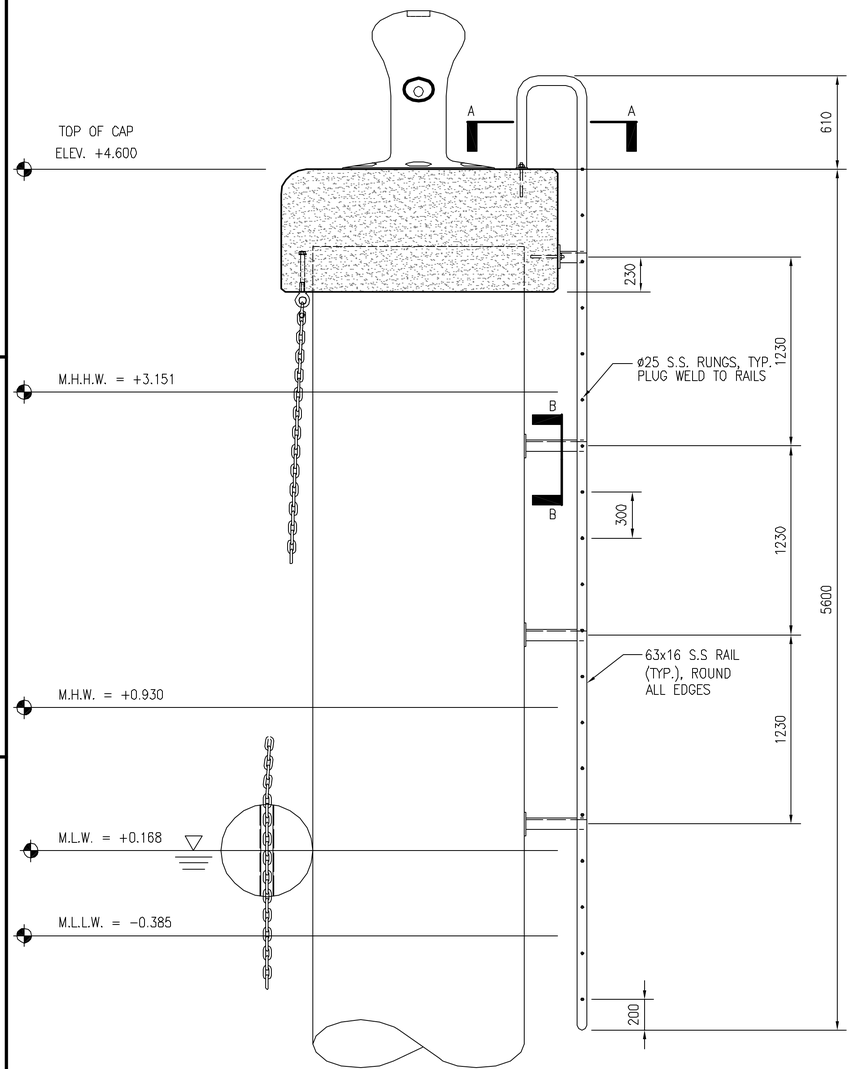

A1 S-702 S-703 **DETAIL – LADDER**
SCALE = 1:20

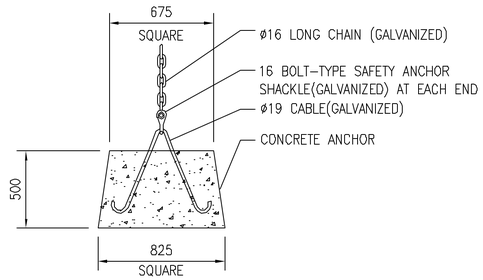

C3 S-702 S-703 **DETAIL – CAMEL WEIGHT**
SCALE = 1:20

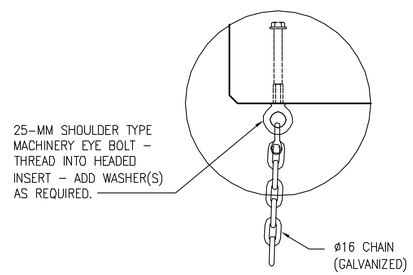

B3 S-702 S-703 **DETAIL**
SCALE = 1:10

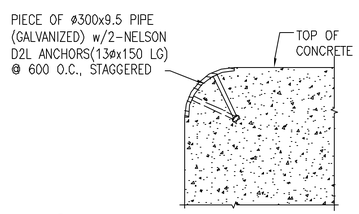

A3 S-702 S-703 **DETAIL**
SCALE = 1:5

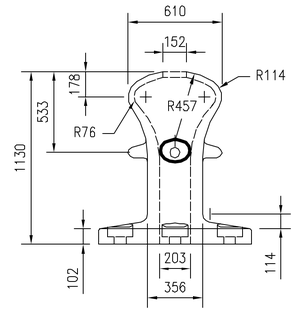

ELEVATION

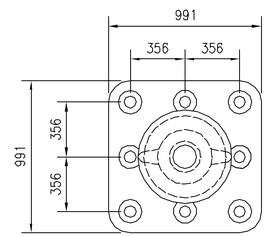

PLAN

B4 S-702 S-703 **DETAIL – 112 METRIC TON(135 TON) BOLLARD**
SCALE = 1:20

GRAPHIC SCALE:

1:20 — 0 200 1000 2000mm
1:10 — 0 100 500 1000mm
1:5 — 0 50 250 500mm

			APPR
			DATE
			DESCRIPTION
			SYM.

TRANSYSTEMS CORPORATION
Town Point Center
150 Boush Street ~ Suite 1000
Norfolk ~ Virginia ~ USA
23510-1638
Phone 757-627-1112
Fax 757-627-1113
www.transystems.com

COMMONWEALTH OF VIRGINIA
ROBERT DUKE SNYDER
No.034620
9/25/03
PROFESSIONAL ENGINEER
SEAL

APPROVED
ACTMTY – SATISFACTORY TO
DATE
APPROVED
J P Bowen
FOR EFD FOR COMMANDER NAVFAC
10/02/03
DATE

A/E		EFD
RDS	DESIGN	
MFW	DRAWN	
JE	REVIEW	pch
RCI	QC	
WSW	CHIEF ARCH./ ENGR.	

PROJECT MANAGER
FIRE PROTECTION
BRANCH MANAGER
DESIGN DIRECTOR

DEPARTMENT OF THE NAVY
NAVAL FACILITIES ENGINEERING COMMAND
ATLANTIC DIVISION
NORFOLK, VIRGINIA
NAVAL STATION
NAVAL STATION
NORFOLK, VIRGINIA
SMALL CRAFT BASIN
DETAILS

CODE ID. NO. 80091 | SIZE D
SCALE: AS NOTED
EFD NO.
STA. PROJ. NO. P-094
SPEC. NO. 05-03-3066
CONSTR. CONTR. NO.
N62470-03-B-3066
NAVFAC DRAWING NO.
4501331
SHEET 94 OF 123
S-703

DRAWFORM REVISION SEPT 2001

P307028151 UPDATED: 09/23/03

GENERAL NOTES, LEGENDS AND ABBREVIATIONS

ABBREVIATIONS

AFF	ABOVE FINISHED FLOOR	INT	INTERIOR
ALUM	ALUMINUM	MAX	MAXIMUM
CONC	CONCRETE	MECH	MECHANICAL
CONT	CONTINUOUS	MTL	METAL
DIA	DIAMETER	MIN	MINIMUM
ELEC	ELECTRICAL	O.C.	ON CENTER
ELEV	ELEVATION	OPP	OPPOSITE
GWB	GYPSUM WALLBOARD	OVHD	OVERHEAD
HM	HOLLOW METAL	REQ'D	REQUIRED
INCL	INCLUDING	SPEC	SPECIFICATION
		TYP	TYPICAL

SYMBOL LEGEND

	BUILDING ELEVATION ABOVE FINISHED FLOOR
1 / A–101 A–301	BUILDING SECTION
1 / A–101 A–301	DETAIL/SECTION
1 / A–101 A–301	ELEVATION INTERIOR/EXTERIOR
1	DOOR NUMBER
101	ROOM NUMBER
1	WINDOW NUMBER

GENERAL NOTES

1. HATCH PATTERNS INDICATED ON THIS SHEET ARE FOR ARCHITECTURAL SHEETS ONLY.
2. ADDITIONAL DISCIPLINE–SPECIFIC SYMBOLS AND ABBREVIATIONS ARE SHOWN ON THE FIRST SHEET WITHIN THAT DISCIPLINE, WHERE THEY OCCUR.
3. THROUGHOUT ARCHITECTURAL SHEETS ONLY FINISH FLOOR ELEVATION IS ASSUMED TO BE 0MM (EQUAL TO 3030 FROM MEAN LOW WATER).

HATCH PATTERNS

CONCRETE

FLOATING PIER

STEEL

NON SHRINKING GROUT

CODE BUILDING DATA

1. CODES REFERENCED:
   - INTERNATIONAL BUILDING CODE (IBC) 2000
   - NATIONAL FIRE PROTECTION ASSOC (NFPA) 101 2000
   - NFPA 13 2002
   - NFPA 72 2002
   - NFPA 90A

SECTION AND DETAIL DESIGNATION

THE STANDARD SECTION SYMBOL WILL BE AS FOLLOWS:

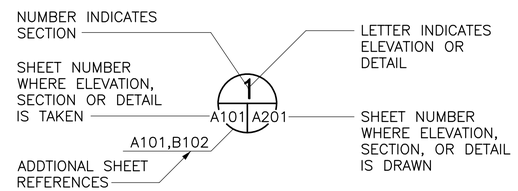

ELEVATION, SECTION, OR DETAIL SYMBOL

SYM.	DESCRIPTION	DATE	APPR.

DESIGNED & ENGINEERED BY:
LANTDIV
NAVAL FACILITIES ENGINEERING COMMAND

SEAL

APPROVED
ACTIVITY – SATISFACTORY TO
DATE

APPROVED
FOR EFD FOR COMMANDER NAVFAC
10/02/03
DATE

A/E		EFD
	DESIGN	DC
	DRAWN	DC
	REVIEW	MOA
	QC	
	CHIEF ARCH./ ENGR.	
	PROJECT MANAGER	KB
	FIRE PROTECTION	
	BRANCH MANAGER	CRB
	DESIGN DIRECTOR	

DEPARTMENT OF THE NAVY
NAVAL FACILITIES ENGINEERING COMMAND
ATLANTIC DIVISION
NAVAL STATION
NAVAL STATION NORFOLK, VIRGINIA
NORFOLK, VIRGINIA
SMALL CRAFT BASIN
GENERAL NOTES AND ABBREVIATIONS

CODE ID. NO. 80091 | SIZE D
SCALE: AS NOTED
EFD NO.
STA. PROJ. NO. P–094
SPEC. NO. 05–03–3066
CONSTR. CONTR. NO.
N62470–03–B–3066
NAVFAC DRAWING NO.
4501332
SHEET 95 OF 123
A–001

DRAWFORM REVISION SEPT 2001

FILENAME: 0960A001.DWG, UPDATED ON 08/26/03 AT 14:42, XREFS: 0960PROJ–INFO

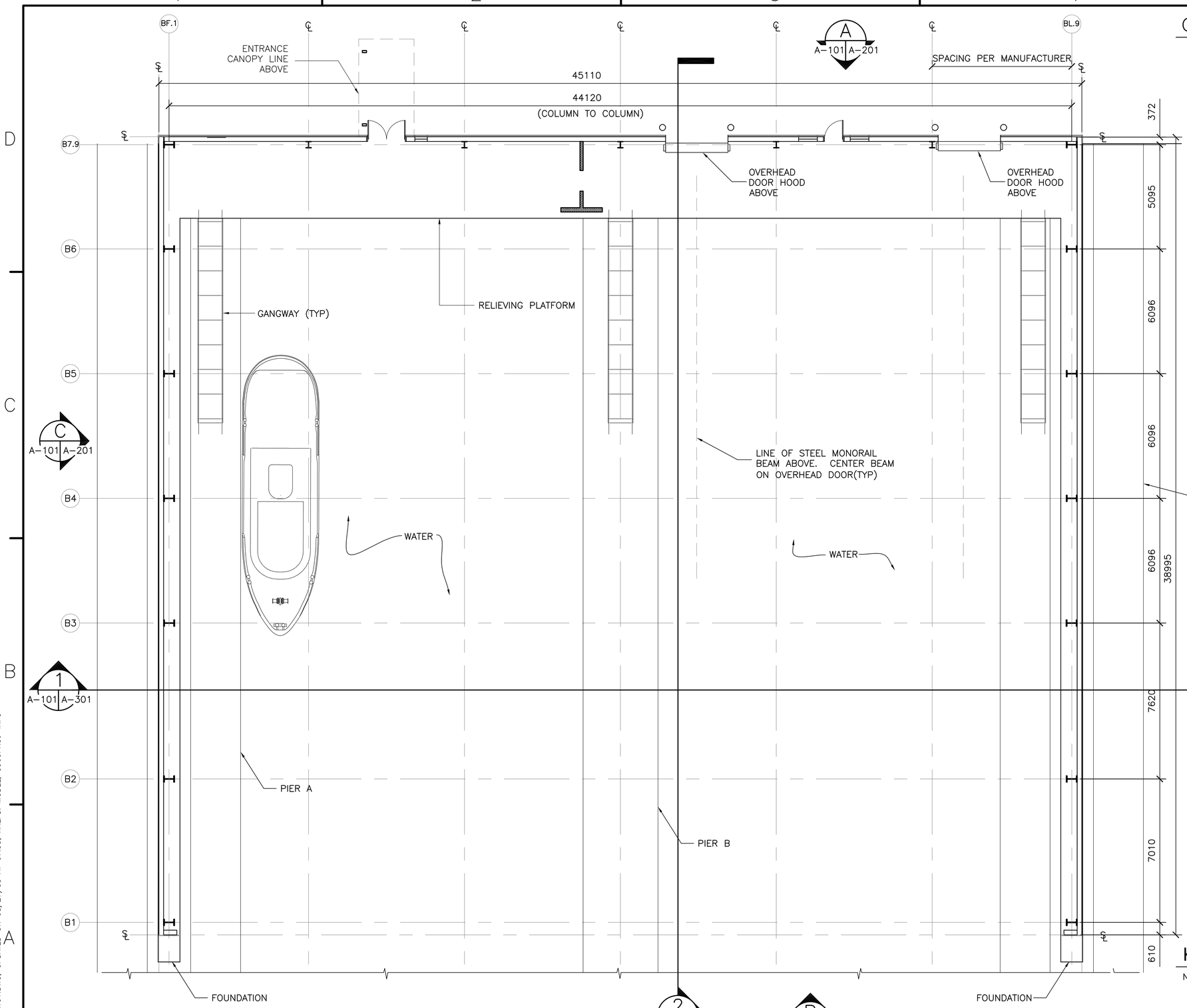

FLOORPLAN – BOAT SHED

SCALE: 1 : 100

GENERAL NOTES:

1. FOR ADDITIONAL INFORMATION, SEE ENLARGED PLANS A–102 AND A–103
2. SEE STRUCTURAL DRAWINGS FOR LOCATIONS OF ALL COLUMNS AND WALL REINFORCING DETAILS.
3. ENDWALL COLUMNS SHALL BE SPACED PER BUILDING MANUFACTURER'S REQUIREMENTS.
4. SEE SHEETS S–501 THRU S–503 FOR FLOATING PIER INFO AND DETAILS.
5. SEE SHEET S–104 FOR LOCATIONS OF GANGWAYS.
6. SEE SHEET S–601 FOR MONORAIL DETAILS.

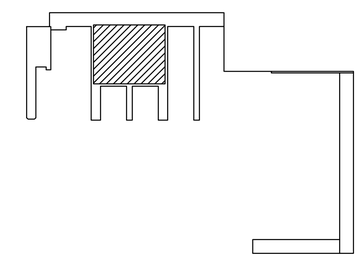

KEY PLAN – SMALL BOAT BASIN

NOT TO SCALE

GRAPHIC SCALE:

1:100 0 1 5 10m

SYM.	DESCRIPTION	DATE	APPR

DESIGNED & ENGINEERED BY: LANTDIV NAVAL FACILITIES ENGINEERING COMMAND

SEAL

APPROVED

ACTIVITY – SATISFACTORY TO

DATE

APPROVED J P Bowen FOR EFD FOR COMMANDER NAVFAC 10/02/03

DATE

A/E	EFD
DESIGN	DC
DRAWN	DC
REVIEW	MOA
QC	
CHIEF ARCH./ ENGR.	
PROJECT MANAGER	KB
FIRE PROTECTION	
BRANCH MANAGER	CRB
DESIGN DIRECTOR	

DEPARTMENT OF THE NAVY
NAVAL FACILITIES ENGINEERING COMMAND
ATLANTIC DIVISION
NAVAL STATION NORFOLK, VIRGINIA
NAVAL STATION NORFOLK, VIRGINIA

SMALL CRAFT BASIN

FLOORPLAN – BOAT SHED

CODE ID. NO. 80091 | SIZE D

SCALE: AS NOTED

EFD NO.

STA. PROJ. NO. P–094

SPEC. NO. 05–03–3066

CONSTR. CONTR. NO. N62470–03–B–3066

NAVFAC DRAWING NO. 4501333

SHEET 96 OF 123

A–101

DRAWFORM REVISION MAY 2000

FILENAME: 0960A101.DWG, UPDATED ON 08/27/03 AT 07:55, XREFS: MODEL, 0960PROJ-INFO

GENERAL NOTES:

1. SEE STRUCTURAL DRAWINGS FOR LOCATIONS OF ALL COLUMNS AND WALL REINFORCING DETAILS.

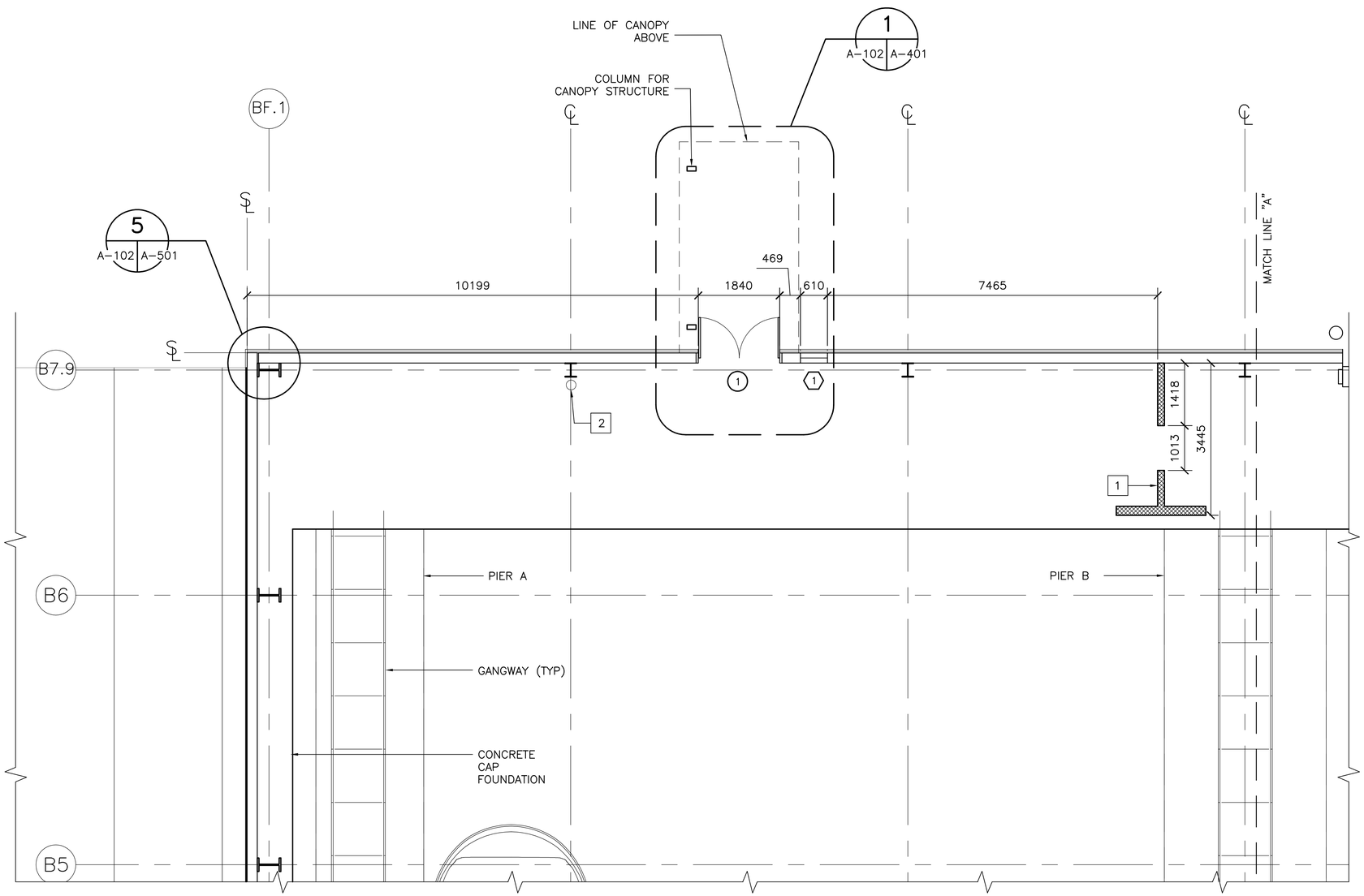

ENLARGED FLOOR PLAN

SCALE: 1 : 50

WORK NOTES

1 PROVIDE 3048MM HIGH SEPARATION WALL. WALL IS 203MM CMU 15 COURSES HIGH. SEE DETAILS 7/A-501 AND 8/A-501 FOR ADDITIONAL INFORMATION.

2 PROVIDE 18 LB FIRE EXTINGUISHER MOUNTED TO STEEL COLUMN.

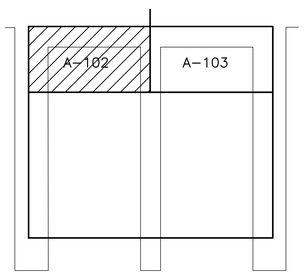

KEY PLAN – SMALL BOAT BASIN

NOT TO SCALE

GRAPHIC SCALE:

1:50 0 1000 3000 5000mm

SYM.	DESCRIPTION	DATE	APPR

DESIGNED & ENGINEERED BY: LANTDIV NAVAL FACILITIES ENGINEERING COMMAND

SEAL

APPROVED

ACTIVITY – SATISFACTORY TO

DATE

APPROVED J.P. Bowen FOR EFD FOR COMMANDER NAVFAC 10/02/03

DATE

A/E		EFD
	DESIGN	DC
	DRAWN	DC
	REVIEW	MOA
	QC	
	CHIEF ARCH./ ENGR.	
	PROJECT MANAGER	KB
	FIRE PROTECTION	
	BRANCH MANAGER	CRB
	DESIGN DIRECTOR	

DEPARTMENT OF THE NAVY
NAVAL FACILITIES ENGINEERING COMMAND
ATLANTIC DIVISION
NORFOLK, VIRGINIA
NAVAL STATION
NORFOLK, VIRGINIA

SMALL CRAFT BASIN

ENLARGED FLOOR PLANS

CODE ID. NO. 80091 SIZE D

SCALE: 1:50

EFD NO.

STA. PROJ. NO. P-094

SPEC. NO. 05-03-3066

CONSTR. CONTR. NO. N62470-03-B-3066

NAVFAC DRAWING NO. 4501334

SHEET 97 OF 123

A-102

DRAWFORM REVISION MAY 2000

FILENAME: 0960A102.DWG, UPDATED ON 08/28/03 AT 11:17, XREFS: MODEL, 0960PROJ-INFO

GENERAL NOTES:

1. SEE STRUCTURAL DRAWINGS FOR LOCATIONS OF ALL COLUMNS AND WALL REINFORCING DETAILS.

WORK NOTES

1 PROVIDE 3048 HIGH SEPARATION WALL. WALL IS 203MM CUM 15 COURSES HIGH. SEE DETAILS 7/A-501 AND 8/A-501 FOR ADDITIONAL INFORMATION.

2 PROVIDE 18 LB FIRE EXTINGUISHER MOUNTED TO STEEL COLUMN.

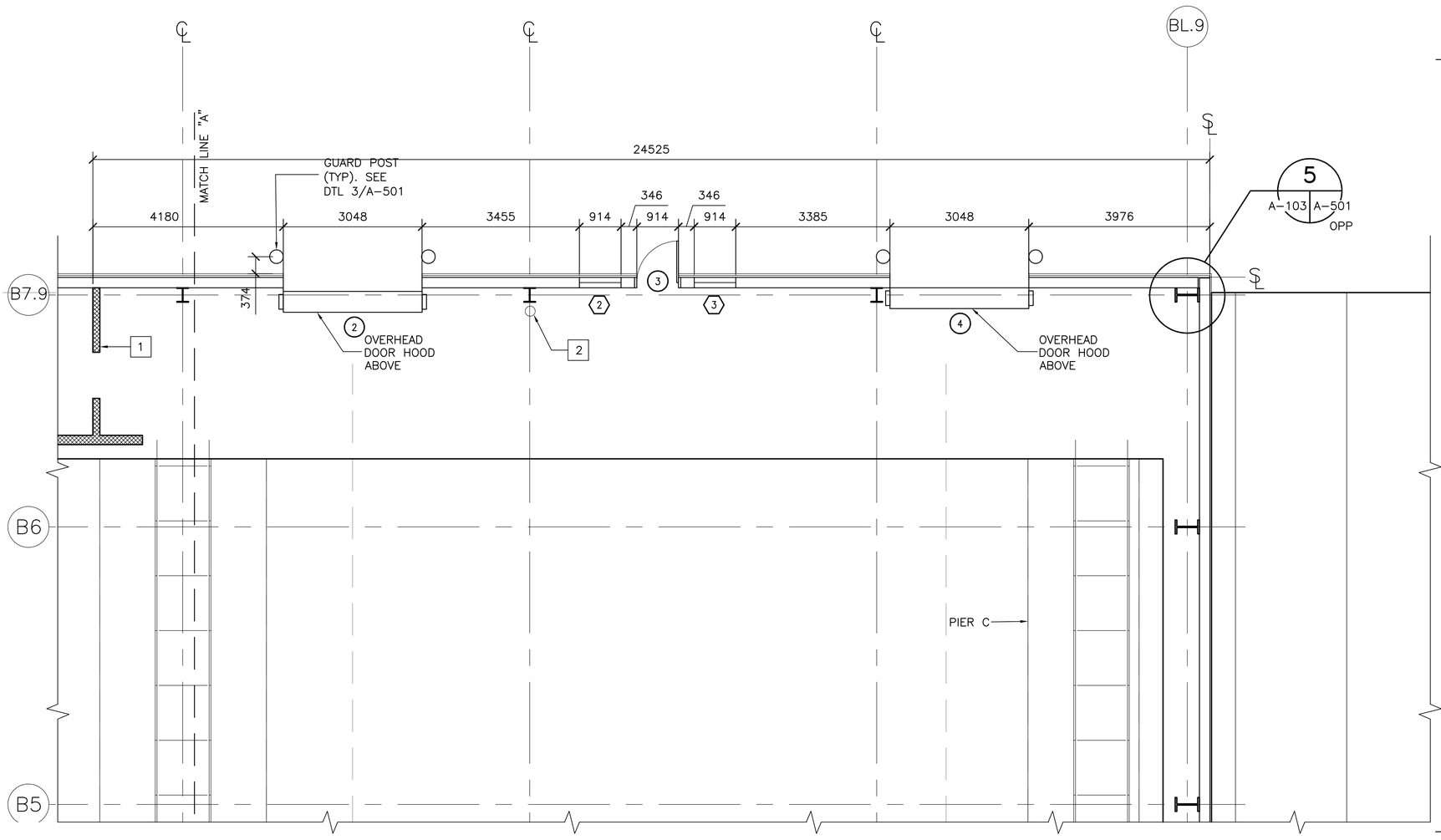

ENLARGED FLOOR PLAN

SCALE: 1 : 50

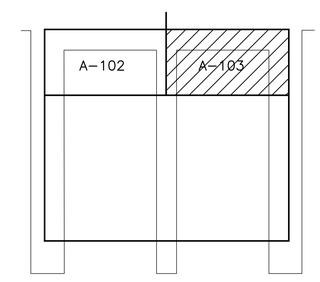

KEY PLAN – SMALL BOAT BASIN

NOT TO SCALE

GRAPHIC SCALE:

1:50 0 1000 3000 5000mm

STM.	DESCRIPTION	DATE	APPR

DESIGNED & ENGINEERED BY: LANTDIV NAVAL FACILITIES ENGINEERING COMMAND

SEAL

APPROVED

ACTIVITY – SATISFACTORY TO

DATE

APPROVED J.P. Bowen FOR EFD FOR COMMANDER NAVFAC 10/02/03

DATE

A/E	EFD
DESIGN	DC
DRAWN	DC
REVIEW	MOA
QC	
CHIEF ARCH./ ENGR.	
PROJECT MANAGER	KB
FIRE PROTECTION	
BRANCH MANAGER	CRB
DESIGN DIRECTOR	

DEPARTMENT OF THE NAVY
NAVAL FACILITIES ENGINEERING COMMAND
ATLANTIC DIVISION
NAVAL STATION NORFOLK, VIRGINIA
NAVAL STATION NORFOLK, VIRGINIA
SMALL CRAFT BASIN
ENLARGED FLOOR PLANS

CODE ID. NO. 80091 SIZE D

SCALE: 1:50

EFD NO.

STA. PROJ. NO. P-094

SPEC. NO. 05-03-3066

CONSTR. CONTR. NO. N62470-03-B-3066

NAVFAC DRAWING NO. 4501335

SHEET 98 OF 123

A-103

DRAWFORM REVISION MAY 2000

FILENAME: 0960A103.DWG, UPDATED ON 08/28/03 AT 09:24, XREFS: MODEL, 0960PROJ-INFO

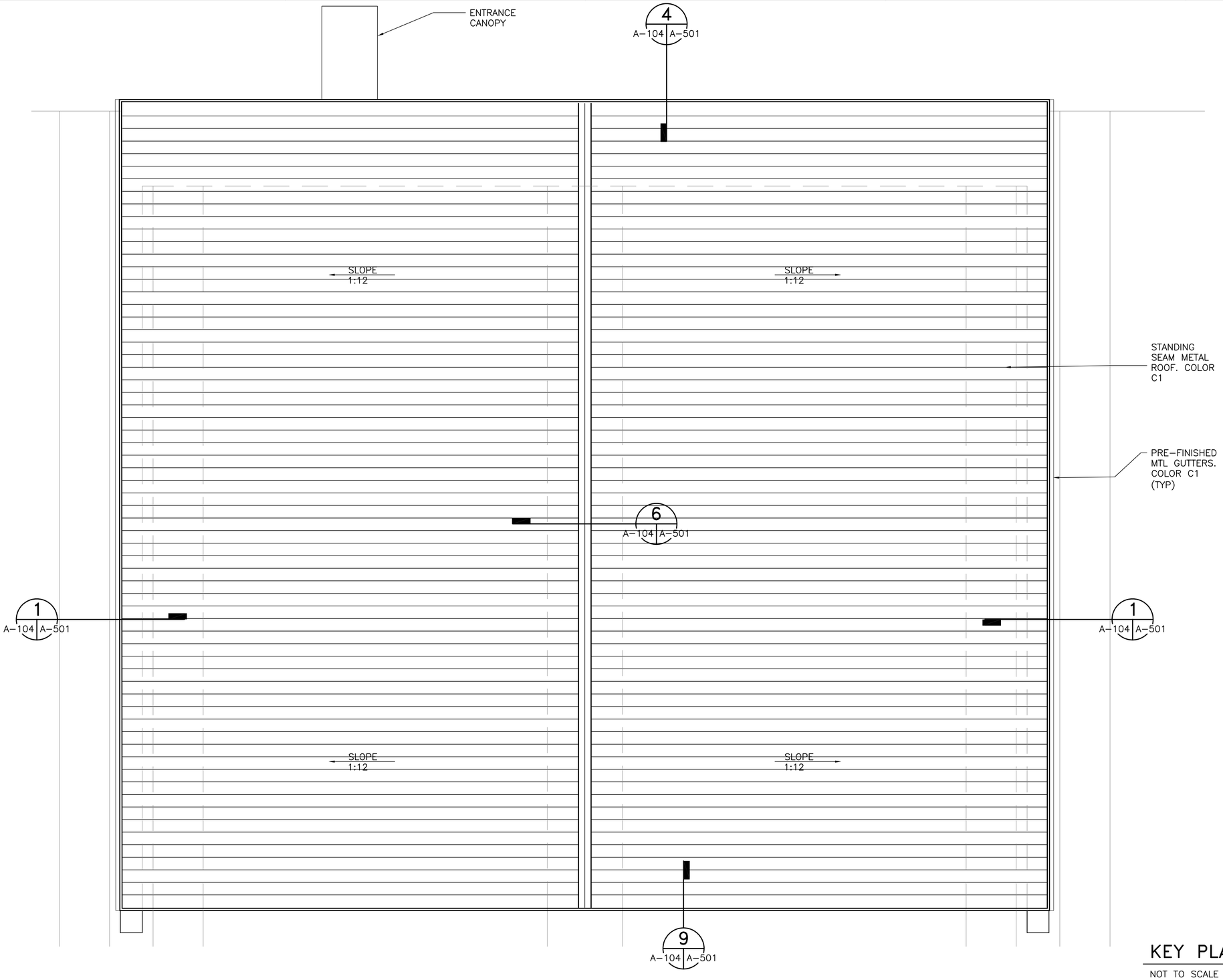

ROOF PLAN – BOAT SHED

1 : 100

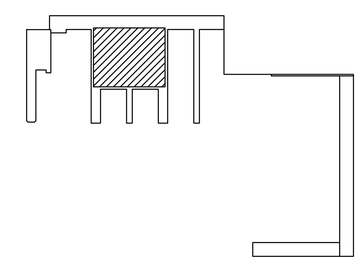

KEY PLAN – SMALL BOAT BASIN

NOT TO SCALE

GRAPHIC SCALE

1:100 0 1 5 10m

	DESIGN	DC
	DRAWN	DC
	REVIEW	MOA
	QC	
	CHIEF ARCH./ ENGR.	
	PROJECT MANAGER	KB
	FIRE PROTECTION	
	BRANCH MANAGER	CRB
	DESIGN DIRECTOR	

A/E EFD

DESIGNED & ENGINEERED BY: LANTDIV NAVAL FACILITIES ENGINEERING COMMAND

APPROVED

ACTIVITY – SATISFACTORY TO

DATE

APPROVED J P Bowen FOR EFD FOR COMMANDER NAVFAC 10/02/03

DATE

DEPARTMENT OF THE NAVY
NAVAL STATION NAVAL STATION
NAVAL FACILITIES ENGINEERING COMMAND ATLANTIC DIVISION
NORFOLK, VIRGINIA NORFOLK, VIRGINIA

SMALL CRAFT BASIN

ROOF PLAN – BOAT SHED

CODE ID. NO. 80091 SIZE D

SCALE: AS NOTED

EFD NO.

STA. PROJ. NO. P-094

SPEC. NO. 05-03-3066

CONSTR. CONTR. NO. N62470-03-B-3066

NAVFAC DRAWING NO. 4501336

SHEET 99 OF 123

A-104

DRAWFORM REVISION MAY 2000

FILENAME: 0960A104.DWG, UPDATED ON 08/27/03 AT 08:09, XREFS: MODEL, 0960PROJ-INFO

GENERAL NOTES:

1. SEE SHEETS S-501 THRU S-503 FOR FLOATING PIER INFO AND DETAILS.

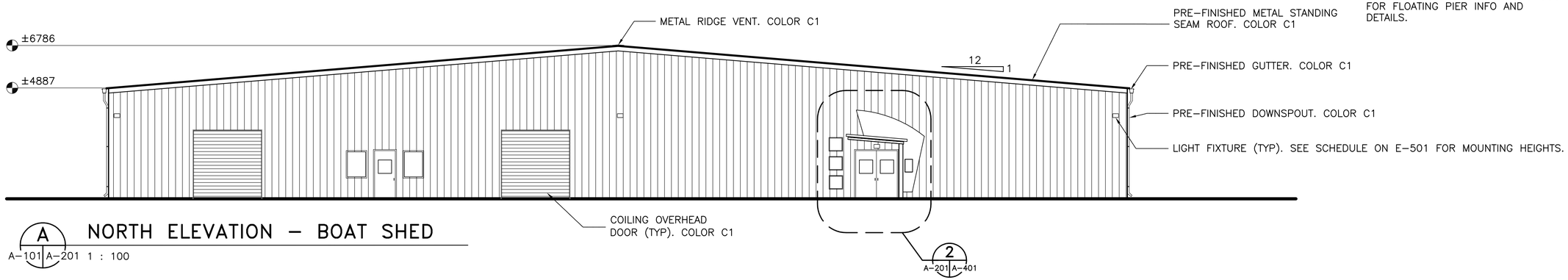

A NORTH ELEVATION – BOAT SHED

A-101 A-201 1 : 100

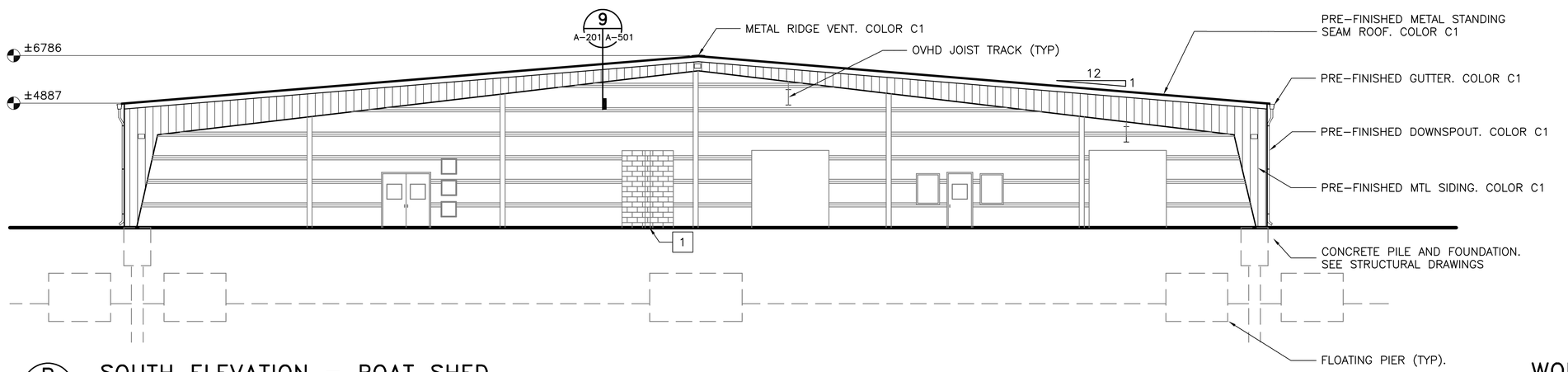

B SOUTH ELEVATION – BOAT SHED

A-101 A-201 1 : 100

WORK NOTES

1 PROVIDE 3048 MM HIGH SEPARATION WALL. WALL IS 203MM CMU 15 COURSES HIGH. SEE DETAIL 7/A-501 AND 8/A-501 FOR ADDITIONAL INFORMATION.

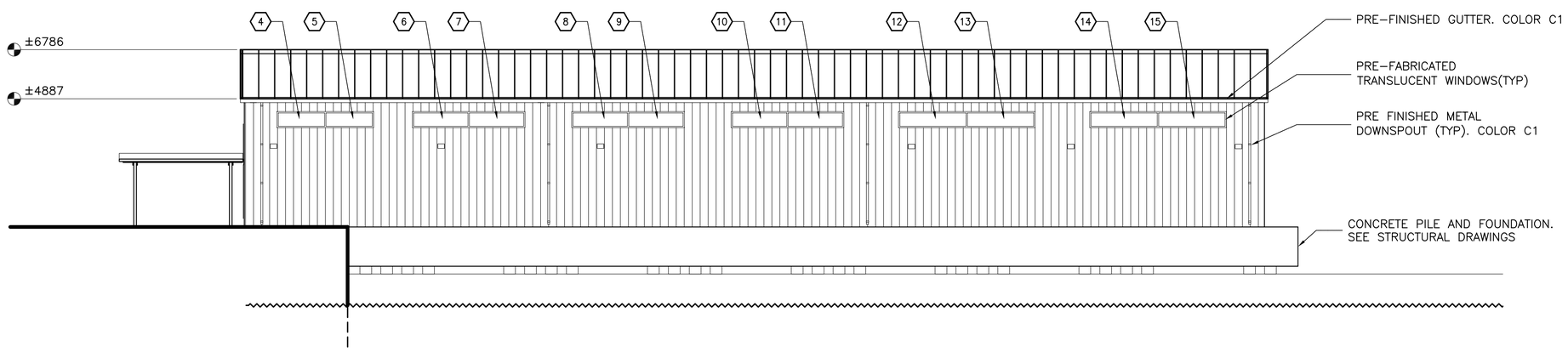

C WEST ELEVATION – BOAT SHED

A-101 A-201 1 : 100

GRAPHIC SCALE:

1:100 0 1 5 10m

APPR	DATE	DESCRIPTION	STAL

DESIGNED & ENGINEERED BY: LANTDIV NAVAL FACILITIES ENGINEERING COMMAND

SEAL

APPROVED

ACTIVITY – SATISFACTORY TO

DATE

APPROVED J.P. Bowen FOR EFD FOR COMMANDER NAVFAC 10/02/03

DATE

	A/E	EFD
DESIGN		DC
DRAWN		DC
REVIEW		MOA
QC		
CHIEF ARCH./ ENGR.		
PROJECT MANAGER		KB
FIRE PROTECTION		
BRANCH MANAGER		CRB
DESIGN DIRECTOR		

DEPARTMENT OF THE NAVY
NAVAL STATION NAVAL STATION
ATLANTIC DIVISION NAVAL FACILITIES ENGINEERING COMMAND
NORFOLK, VIRGINIA NORFOLK, VIRGINIA

SMALL CRAFT BASIN

ELEVATIONS – BOAT SHED

CODE ID. NO. 80091 SIZE D

SCALE: AS NOTED

EFD NO.

STA. PROJ. NO. P-094

SPEC. NO. 05-03-3066

CONSTR. CONTR. NO. N62470-03-B-3066

NAVFAC DRAWING NO. 4501337

SHEET 100 OF 123

A-201

DRAWFORM REVISION MAY 2000

FILENAME: 0960A201.DWG, UPDATED ON 08/27/03 AT 08:59, XREFS: MODEL, 0960PROJ-INFO

GENERAL NOTES:

1. SEE SHEETS S-501 THRU S-503 FOR FLOATING PIER INFO AND DETAILS

2. BIRD CONTROL NETTING SHOULD RUN FROM LOWER BEAM FLANGE TO LOWER BEAM FLANGE

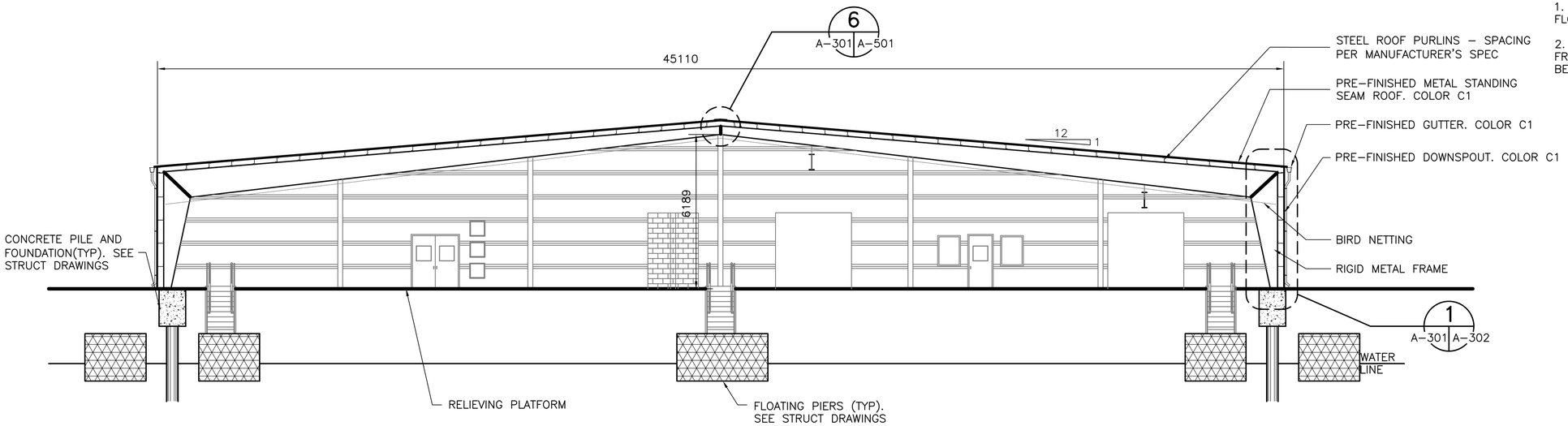

BUILDING SECTION - BOAT SHED

1 : 100

1
A-101 A-301

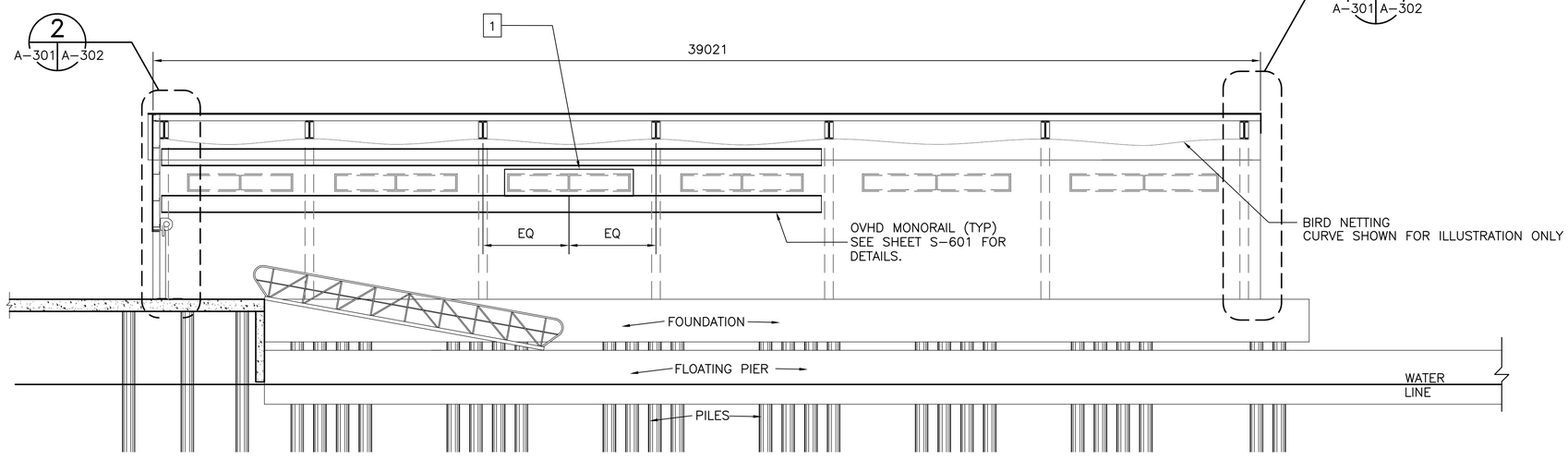

WORK NOTES: 1

1 EACH PAIR OF SIDEWALL WINDOWS SHALL BE CENTERED IN ITS RESPECTIVE "BAY."

BUILDING SECTION - BOAT SHED

1 : 100

2
A-101 A-301

GRAPHIC SCALE:

1:100 0 1 5 10m

			APPR
			DATE
			DESCRIPTION
			STAL

DESIGNED & ENGINEERED BY: LANTDIV NAVAL FACILITIES ENGINEERING COMMAND

SEAL

APPROVED

ACTIVITY - SATISFACTORY TO

DATE

APPROVED J.P. Bowen FOR EFD FOR COMMANDER NAVFAC 10/02/03

DATE

A/E	EFD
DESIGN	DC
DRAWN	DC
REVIEW	MOA
QC	
CHIEF ARCH./ ENGR.	
PROJECT MANAGER	KB
FIRE PROTECTION	
BRANCH MANAGER	CRB
DESIGN DIRECTOR	

DEPARTMENT OF THE NAVY
NAVAL STATION NORFOLK, VIRGINIA
NAVAL FACILITIES ENGINEERING COMMAND
ATLANTIC DIVISION
NORFOLK, VIRGINIA

SMALL CRAFT BASIN

SECTIONS

CODE ID. NO. 80091 | SIZE D

SCALE: 1:100

EFD NO.

STA. PROJ. NO. P-094

SPEC. NO. 05-03-3066

CONSTR. CONTR. NO. N62470-03-B-3066

NAVFAC DRAWING NO. 4501338

SHEET 101 OF 123

A-301

DRAWFORM REVISION MAY 2000

FILENAME: 0960A301.DWG, UPDATED ON 08/27/03 AT 09:08, XREFS: MODEL, 0960PROJ-INFO

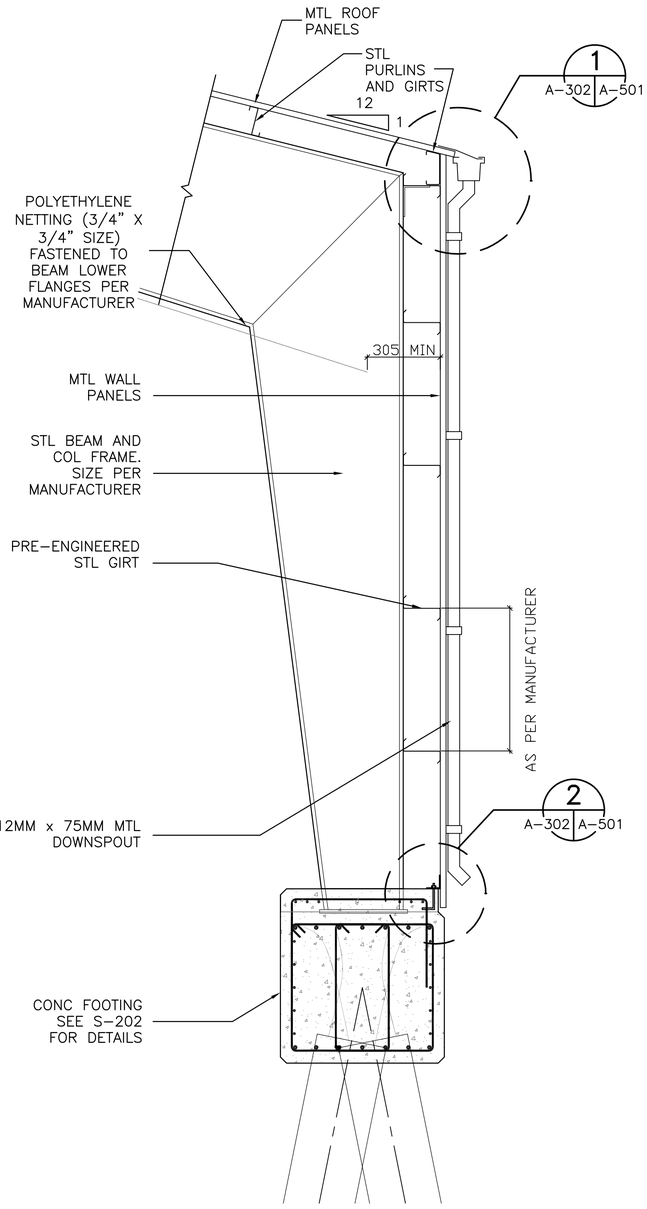

SIDEWALL SECTION 1 A-301 A-302

1:20

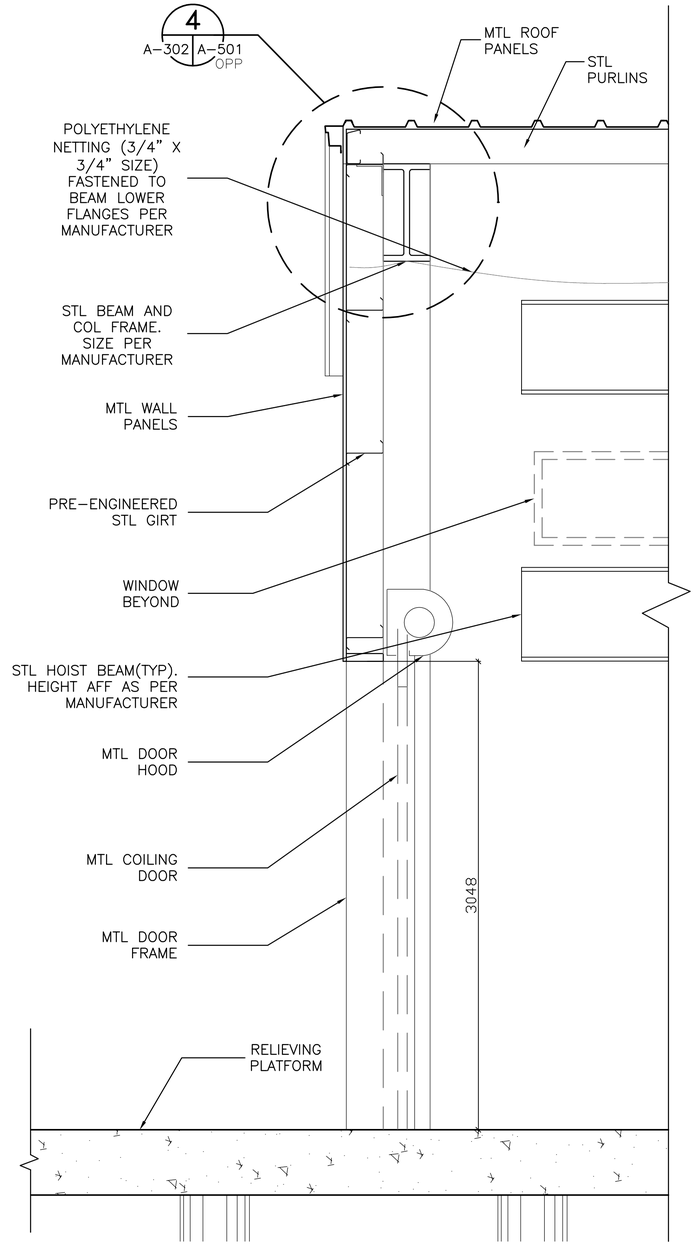

NORTH ENDWALL SECTION 2 A-301 A-302

1:20

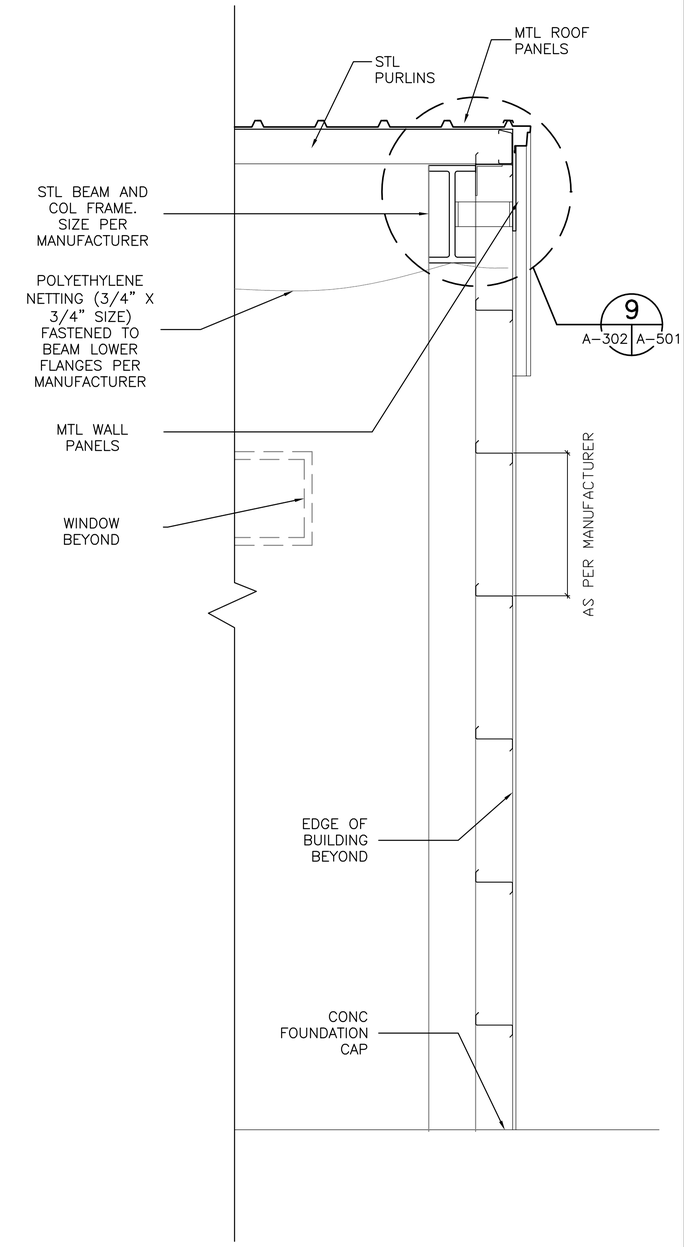

SOUTH ENDWALL SECTION 3 A-301 A-302

1:20

GRAPHIC SCALE:

1:20 0 500 1000 2000mm

		DATE	APPR
		DESCRIPTION	
		STAL	

DESIGNED & ENGINEERED BY:
LANTDIV
NAVAL FACILITIES ENGINEERING COMMAND

SEAL

APPROVED

ACTIVITY – SATISFACTORY TO

DATE

APPROVED
H.P. Bowen
FOR EFD FOR COMMANDER NAVFAC
10/02/03

DATE

A/E	EFD
DESIGN	DC
DRAWN	DC
REVIEW	MOA
QC	
CHIEF ARCH./ ENGR.	
PROJECT MANAGER	KB
FIRE PROTECTION	
BRANCH MANAGER	CRB
DESIGN DIRECTOR	

DEPARTMENT OF THE NAVY
NAVAL STATION
NAVAL STATION
NORFOLK, VIRGINIA
NAVAL FACILITIES ENGINEERING COMMAND
ATLANTIC DIVISION
NORFOLK, VIRGINIA

SMALL CRAFT BASIN

BUILDING SECTIONS – BOAT SHED

CODE ID. NO. 80091 | SIZE D

SCALE: AS NOTED

EFD NO.

STA. PROJ. NO. P-094

SPEC. NO. 05-03-3066

CONSTR. CONTR. NO.
N62470-03-B-3066

NAVFAC DRAWING NO.
4501339

SHEET 102 OF 123

A-302

DRAWFORM REVISION MAY 2000

FILENAME: 0960A302.DWG, UPDATED ON 08/28/03 AT 15:35, XREFS: MODEL, 0960PROJ-INFO

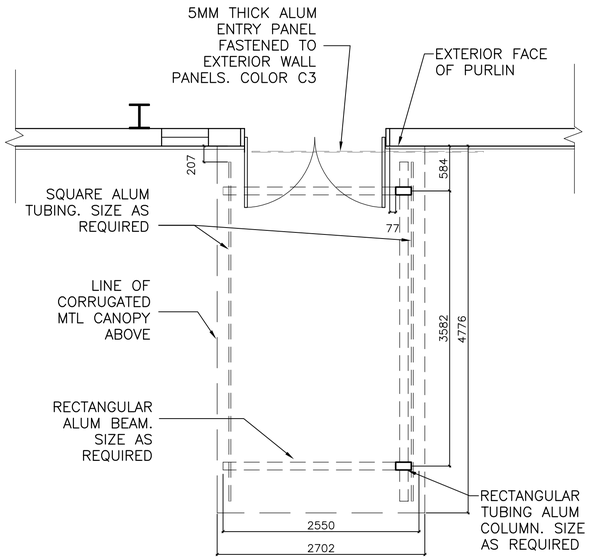

DETAIL 1 A-102 | A-401
SCALE: 1:40

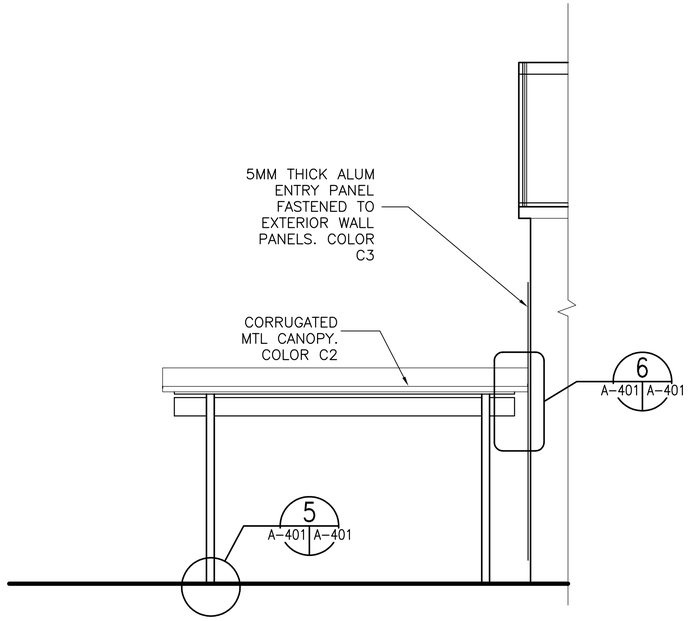

DETAIL 3 A-401 | A-401
SCALE: 1:40

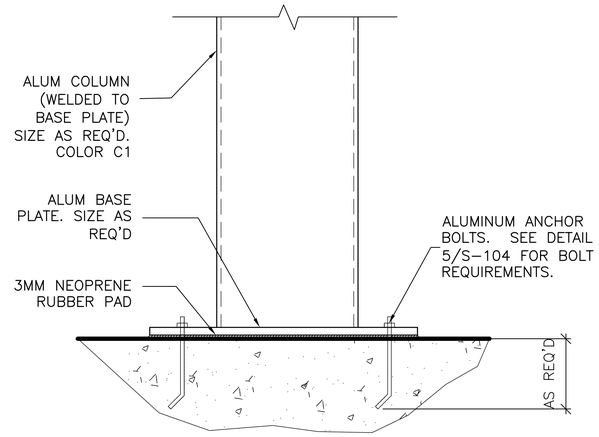

DETAIL 5 A-401 | A-401
SCALE: 1:10

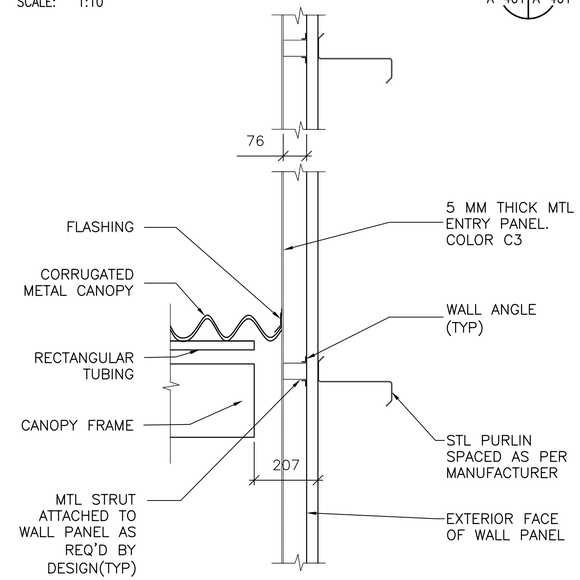

DETAIL 6 A-401 | A-401
SCALE: 1:10

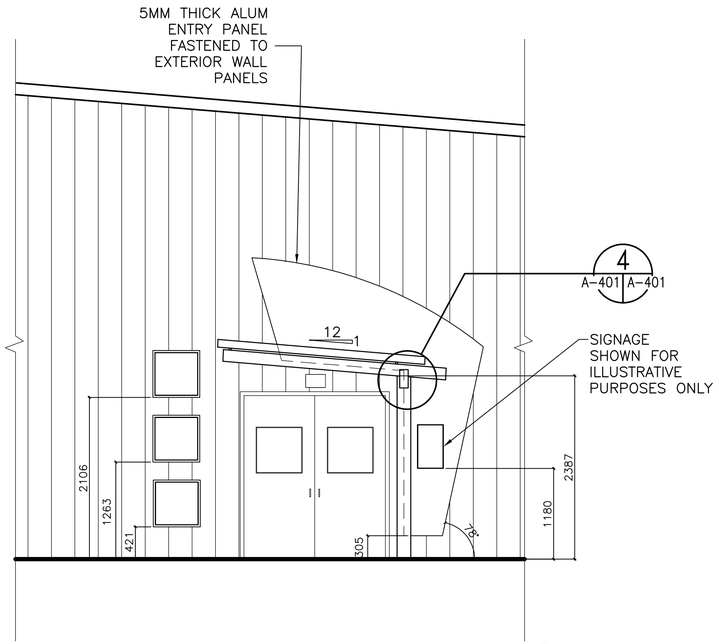

DETAIL 2 A-201 | A-401
SCALE: 1:40

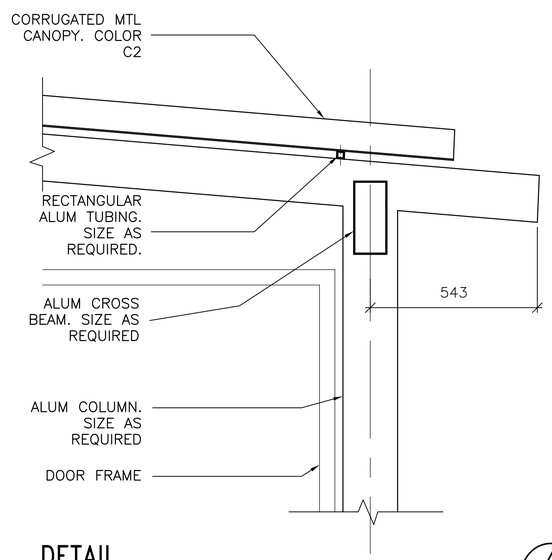

DETAIL 4 A-401 | A-401
SCALE: 1:10

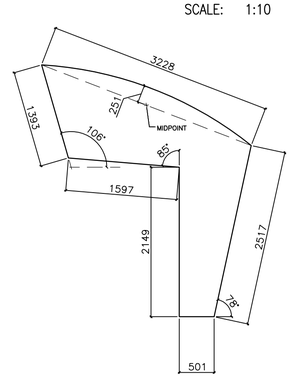

DETAIL 7 A-401 | A-401
SCALE: NO SCALE

GENERAL NOTES:

GRAPHIC SCALE

1:10 — 0 100 500 1000mm

1:40 — 0 1000 2000 4000mm

		DATE	APPR
		DESCRIPTION	
		STAL	

DESIGNED & ENGINEERED BY: LANTDIV NAVAL FACILITIES ENGINEERING COMMAND

SEAL

APPROVED

ACTIVITY – SATISFACTORY TO

DATE

APPROVED J.P. Bowen

FOR EFD FOR COMMANDER NAVFAC 10/02/03

DATE

A/E		EFD
	DESIGN	DC
	DRAWN	DC
	REVIEW	MOA
	QC	
	CHIEF ARCH./ ENGR.	
PROJECT MANAGER		KB
FIRE PROTECTION		
BRANCH MANAGER		CRB
DESIGN DIRECTOR		

NAVAL FACILITIES ENGINEERING COMMAND
ATLANTIC DIVISION
NORFOLK, VIRGINIA

DEPARTMENT OF THE NAVY
NAVAL STATION
NAVAL STATION
NORFOLK, VIRGINIA

SMALL CRAFT BASIN

ENTRY PLANS AND DETAILS

CODE ID. NO. 80091 | SIZE D

SCALE: AS NOTED

EFD NO.

STA. PROJ. NO. P-094

SPEC. NO. 05-03-3066

CONSTR. CONTR. NO. N62470-03-B-3066

NAVFAC DRAWING NO. 4501340

SHEET 103 OF 123

A-401

DRAWFORM REVISION MAY 2000

FILENAME: 0960A401.DWG, UPDATED ON 08/28/03 AT 10:48, XREFS: MODEL 0960PROJ-INFO

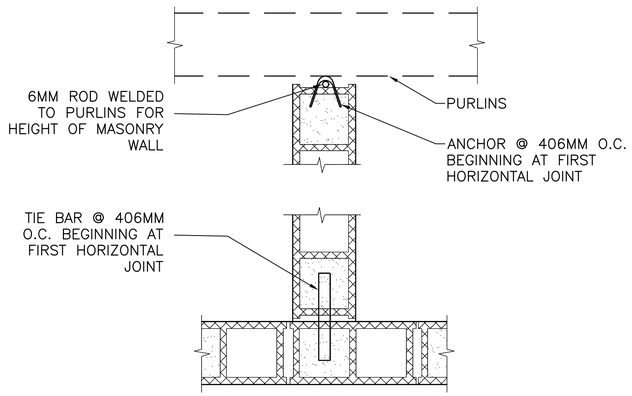

DETAIL 7

SCALE: 1:10 — A-102, A-103, A-201 | A-501

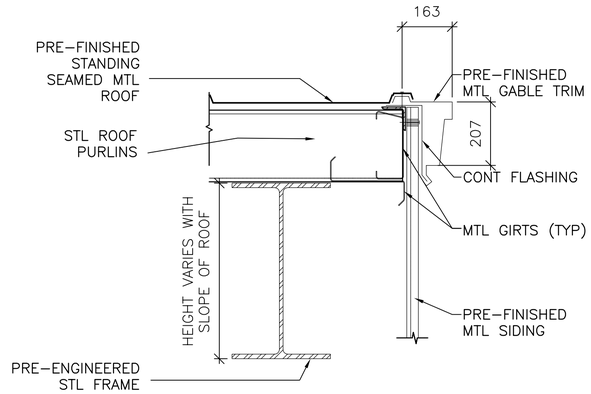

DETAIL 4

SCALE: 1:10 — A-104, A-302 | A-501

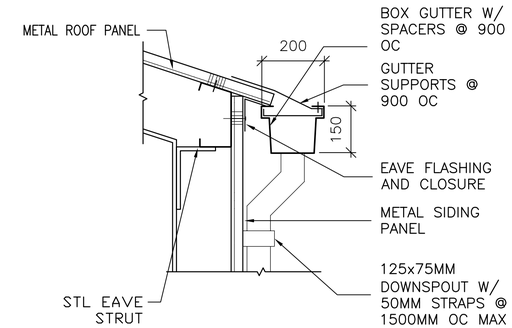

GUTTER DETAIL 1

SCALE: 1:10 — A-104, A-302 | A-501

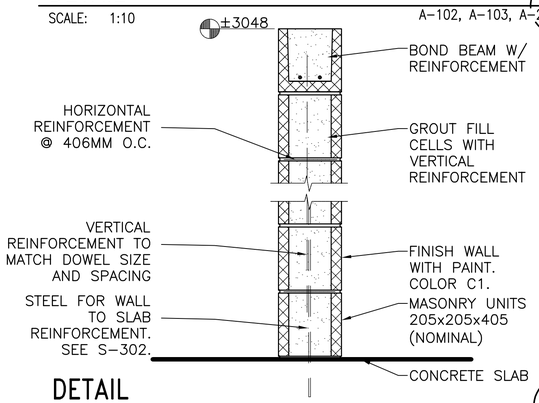

DETAIL 8

SCALE: 1:10 — A-102, A-103 | A-501

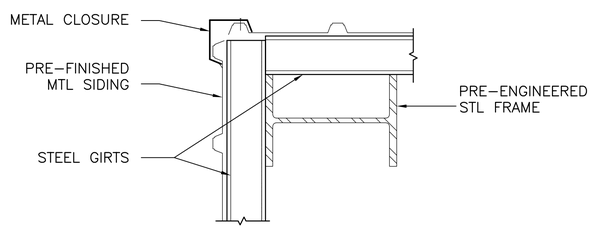

DETAIL 5

SCALE: 1:10 — A-102, A-103 | A-501

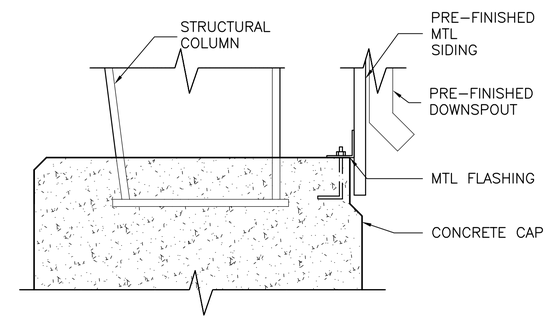

DETAIL 2

SCALE: 1:10 — A-302 | A-501

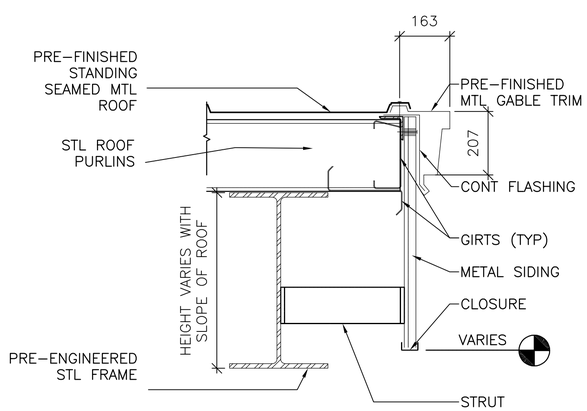

DETAIL 9

SCALE: 1:10 — A-104, A-201, A-302 | A-501

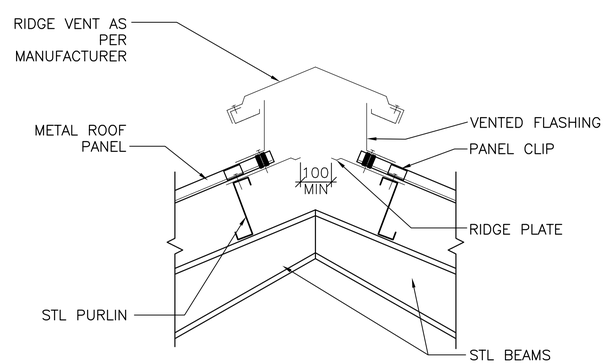

RIDGE DETAIL 6

SCALE: 1:10 — A-301 | A-501

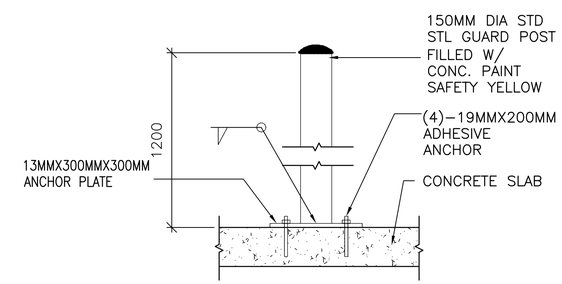

DETAIL 3

SCALE: 1:10 — A-103 | A-501

GRAPHIC SCALE:

1:10 — 0 100 500 1000mm

DATE	APPR	DESCRIPTION	STAL

DESIGNED & ENGINEERED BY: LANTDIV NAVAL FACILITIES ENGINEERING COMMAND

SEAL

APPROVED

ACTIVITY – SATISFACTORY TO

DATE

APPROVED J.P. Bowen FOR EFD FOR COMMANDER NAVFAC 10/02/03

DATE

A/E	EFD
DESIGN	DC
DRAWN	DC
REVIEW	MOA
QC	
CHIEF ARCH./ ENGR.	
PROJECT MANAGER	KB
FIRE PROTECTION	
BRANCH MANAGER	CRB
DESIGN DIRECTOR	

DEPARTMENT OF THE NAVY — NAVAL FACILITIES ENGINEERING COMMAND
NAVAL STATION NORFOLK, VIRGINIA — ATLANTIC DIVISION
NAVAL STATION NORFOLK, VIRGINIA

SMALL CRAFT BASIN

DETAILS

CODE ID. NO. 80091 | SIZE D

SCALE: AS NOTED

EFD NO.

STA. PROJ. NO. P-094

SPEC. NO. 05-03-3066

CONSTR. CONTR. NO. N62470-03-B-3066

NAVFAC DRAWING NO. 4501341

SHEET 104 OF 123

A-501

DRAWFORM REVISION MAY 2000

FILENAME: 0960A501.DWG, UPDATED ON 08/29/03 AT 08:48, XREFS: MODEL, 0960PROJ-INFO

DOOR SCHEDULE

DOOR #	DOOR WIDTH	DOOR HEIGHT	DOOR THICK	DOOR TYPE	DOOR MATERIAL	FRAME MATERIAL	DOOR HEAD	DOOR JAMB	DOOR SILL	REMARKS
1	1840	2134	45	B	HM	ALUM	1/A-601	2/A-601	3/A-601	–
2	3048	3048	–	C	STEEL	STEEL	4/A-601	5/A-601	6/A-601	–
3	914	2134	45	A	HM	ALUM	1/A-601	2/A-601	3/A-601	–
4	3048	3048	–	C	STEEL	STEEL	4/A-601	5/A-601	6/A-601	–

WINDOW SCHEDULE

WINDOW #	WINDOW WIDTH	WINDOW HEIGHT	HEIGHT AFF	WINDOW TYPE	WINDOW MATERIAL	FRAME MATERIAL	WINDOW HEAD	WINDOW JAMB	WINDOW SILL	REMARKS
1	610	2100	VARIES	A	ALUM/GL	ALUM	7/A-601	8/A-601	8/A-601	1
2	914	1219	914	A	ALUM/GL	ALUM	7/A-601	8/A-601	8/A-601	–
3	914	1219	914	A	ALUM/GL	ALUM	7/A-601	8/A-601	8/A-601	–
4	1850	610	3810	B	ALUM/TRAN	ALUM	7/A-601	8/A-601	8/A-601	–
5	1850	610	3810	B	ALUM/TRAN	ALUM	7/A-601	8/A-601	8/A-601	–
6	2155	610	3810	B	ALUM/TRAN	ALUM	7/A-601	8/A-601	8/A-601	–
7	2155	610	3810	B	ALUM/TRAN	ALUM	7/A-601	8/A-601	8/A-601	–
8	2155	610	3810	B	ALUM/TRAN	ALUM	7/A-601	8/A-601	8/A-601	–
9	2155	610	3810	B	ALUM/TRAN	ALUM	7/A-601	8/A-601	8/A-601	–
10	2155	610	3810	B	ALUM/TRAN	ALUM	7/A-601	8/A-601	8/A-601	–
11	2155	610	3810	B	ALUM/TRAN	ALUM	7/A-601	8/A-601	8/A-601	–
12	2612	610	3810	B	ALUM/TRAN	ALUM	7/A-601	8/A-601	8/A-601	–
13	2612	610	3810	B	ALUM/TRAN	ALUM	7/A-601	8/A-601	8/A-601	–
14	2612	610	3810	B	ALUM/TRAN	ALUM	7/A-601	8/A-601	8/A-601	–
15	2612	610	3810	B	ALUM/TRAN	ALUM	7/A-601	8/A-601	8/A-601	–

REMARKS:
1. ALL THREE WINDOWS ARE THE SAME WIDTH AND HEIGHT. HEIGHT AFF FOR EACH WINDOW IS ACCORDING TO DETAIL 2/A-401.

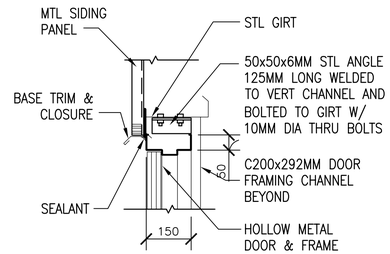

HEAD
SCALE: 1:10
1 A-601 | A-601

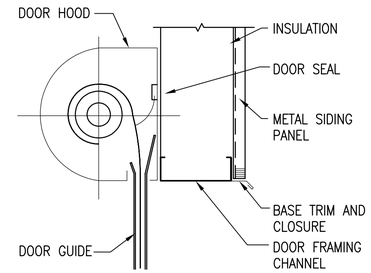

HEAD
SCALE: 1:10
4 A-601 | A-601

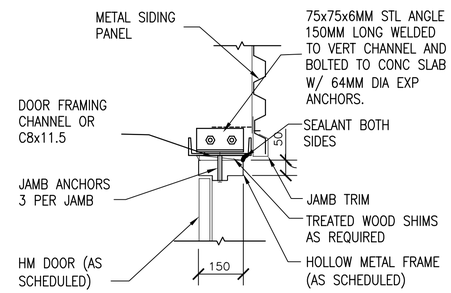

JAMB
SCALE: 1:10
2 A-601 | A-601

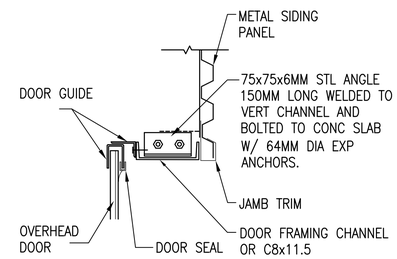

JAMB
SCALE: 1:10
5 A-601 | A-601

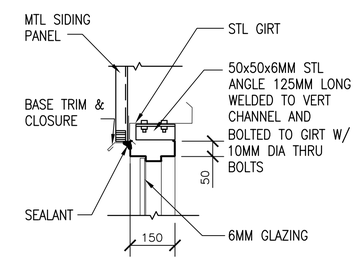

HEAD
SCALE: 1:10
7 A-601 | A-601

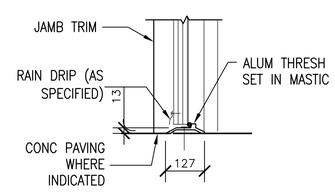

SILL
SCALE: 1:10
3 A-601 | A-601

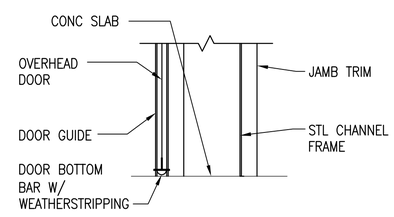

SILL
SCALE: 1:10
6 A-601 | A-601

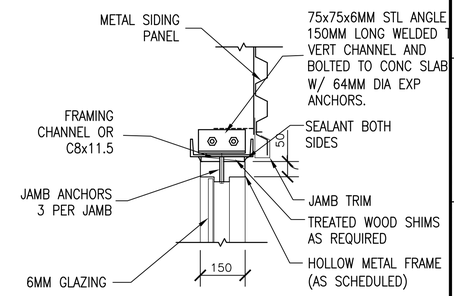

JAMB/SILL (SIM)
SCALE: 1:10
8 A-601 | A-601

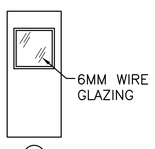

A
HOLLOW METAL DOOR W/ 600x600 WIRE GLASS VISION PANEL

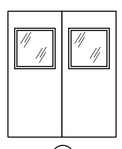

B
HOLLOW METAL DOORS W/ 600x600 WIRE GLASS VISION PANEL

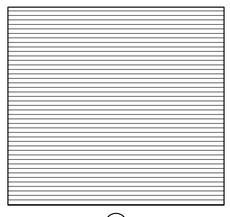

C
OVERHEAD COILING DOOR

DOOR TYPES
SCALE: NO SCALE

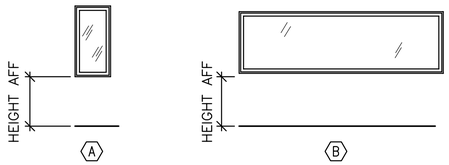

A
HOLLOW METAL FRAME W/ 6MM WIRE GLAZING (45 MIN RATED)

B
HEIGHT AFF IS MEASURED TO TOP OF CONCRETE CAP

WINDOW & LOUVER TYPES
SCALE: NO SCALE

EXTERIOR FINISH SCHEDULE

ITEMS	MATERIAL	COLOR	ITEMS	MATERIAL	COLOR
METAL WALL PANELS	STEEL	C1	GUTTERS AND DOWNSPOUTS	STEEL	C1
ROOF PANELS	STEEL	C1	CANOPY COLUMNS	STEEL	C1
DOORS	STEEL	C1	CANOPY	STEEL	C2
DOOR FRAMES	STEEL	C2	WINDOW FRAMES	ALUM	C3

COLOR LEGEND

C1 BUTLER COLOR COUNTRY WHEAT, OR MATCHING
C2 BUTLER COLOR BURGUNDY, OR MATCHING
C3 BUTLER COLOR SANDALWOOD, OR MATCHING

NOTES:
1. GUTTERS AND DOWNSPOUTS SHALL MATCH COLOR OF ADJACENT PANELS
2. SEE SHEET A-401 FOR ENTRY COLOR INFORMATION

GENERAL NOTES:

1. MANUFACTURER COLORS ARE LISTED FOR CONVENIENCE ONLY. PRODUCTS OF SIMILAR COLOR, TEXTURE, AND QUALITY FROM OTHER MANUFACTURERS IS ACCEPTABLE.

GRAPHIC SCALE:
1:10 0 100 500 1000mm

				APPR
				DATE
				DESCRIPTION
				STM.

DESIGNED & ENGINEERED BY: LANTDIV NAVAL FACILITIES ENGINEERING COMMAND

SEAL

APPROVED
ACTIVITY – SATISFACTORY TO
DATE
APPROVED
FOR EFD FOR COMMANDER NAVFAC
10/02/03
DATE

A/E	EFD
DESIGN	DC
DRAWN	DC
REVIEW	MOA
QC	
CHIEF ARCH./ ENGR.	
PROJECT MANAGER	KB
FIRE PROTECTION	
BRANCH MANAGER	CRB
DESIGN DIRECTOR	

DEPARTMENT OF THE NAVY
NAVAL FACILITIES ENGINEERING COMMAND
ATLANTIC DIVISION
NAVAL STATION
NAVAL STATION NORFOLK, VIRGINIA
NORFOLK, VIRGINIA
SMALL CRAFT BASIN
FINISH, DOOR AND WINDOW SCHEDULES

CODE ID. NO. 80091 | SIZE D
SCALE: AS NOTED
EFD NO.
STA. PROJ. NO. P-094
SPEC. NO. 05-03-3066
CONSTR. CONTR. NO. N62470-03-B-3066
NAVFAC DRAWING NO. 4501342
SHEET 105 OF 123
A-601

DRAWFORM REVISION SEPT 2001

FILENAME: 0960A601.DWG, UPDATED ON 08/29/03 AT 08:57, XREFS: 0960PROJ-INFO

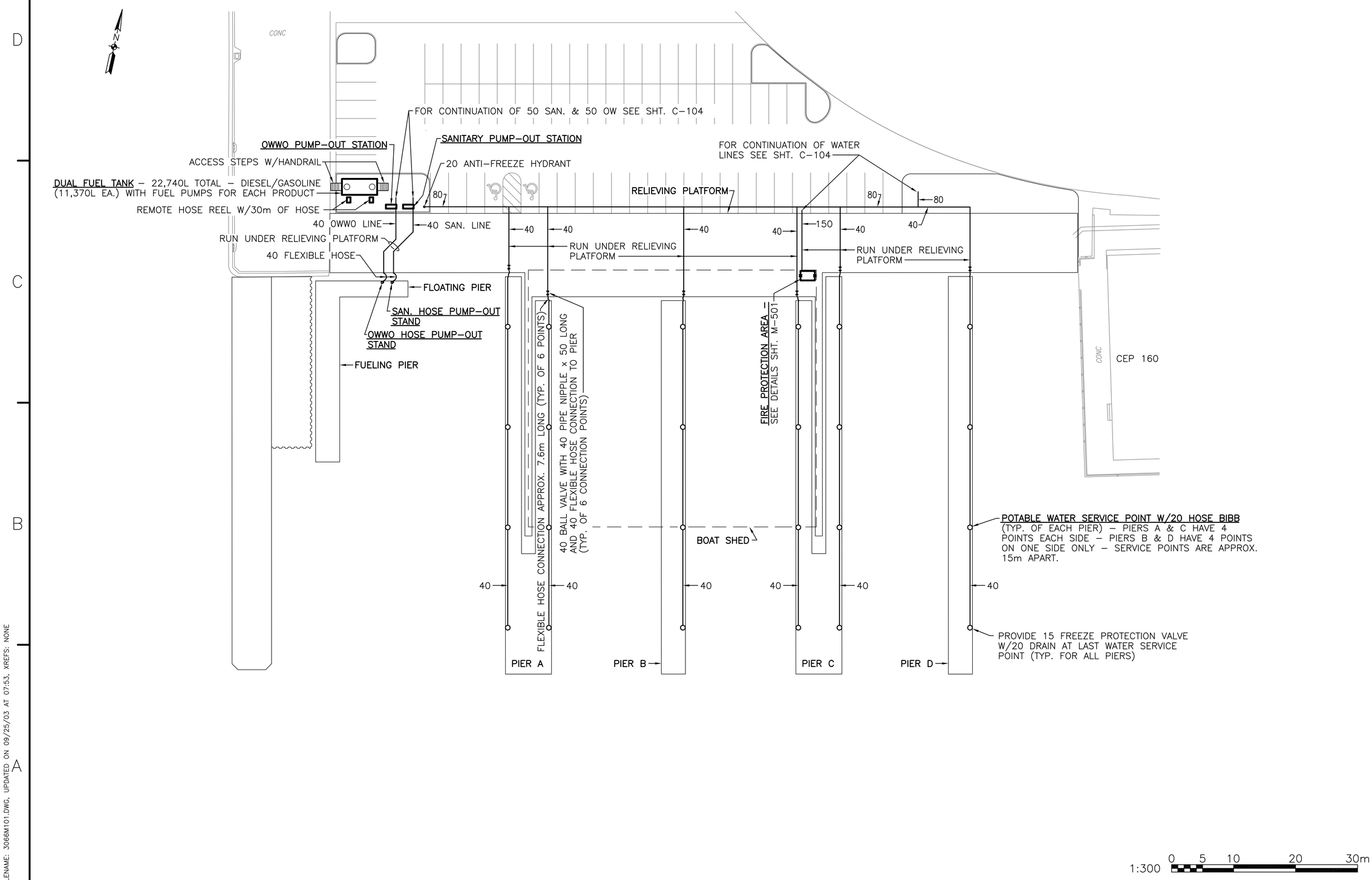

STM.	DESCRIPTION	DATE	APPR

DESIGNED & ENGINEERED BY:
LANTDIV
NAVAL FACILITIES ENGINEERING COMMAND

SEAL

APPROVED

ACTIVITY – SATISFACTORY TO

DATE

APPROVED
J P Bowen
FOR EFD FOR COMMANDER NAVFAC
10/02/03

DATE

A/E	EFD
DESIGN	WWH
DRAWN	WWH
REVIEW	RDD
QC	
CHIEF ARCH./ ENGR.	
PROJECT MANAGER	KB
FIRE PROTECTION	
BRANCH MANAGER	JTM
DESIGN DIRECTOR	

DEPARTMENT OF THE NAVY
NAVAL STATION
NAVAL STATION NORFOLK, VIRGINIA
NAVAL FACILITIES ENGINEERING COMMAND
ATLANTIC DIVISION
NORFOLK, VIRGINIA

SMALL CRAFT BASIN

MECHANICAL PLAN – SMALL BOAT BASIN

CODE ID. NO. 80091 | SIZE D

SCALE: AS NOTED

EFD NO.

STA. PROJ. NO. P-094

SPEC. NO. 05-03-3066

CONSTR. CONTR. NO.
N62470-03-B-3066

NAVFAC DRAWING NO.
4501343

SHEET 106 OF 123

M-101

DRAWFORM REVISION MAY 2000

FILENAME: 3066M101.DWG, UPDATED ON 09/25/03 AT 07:53, XREFS: NONE

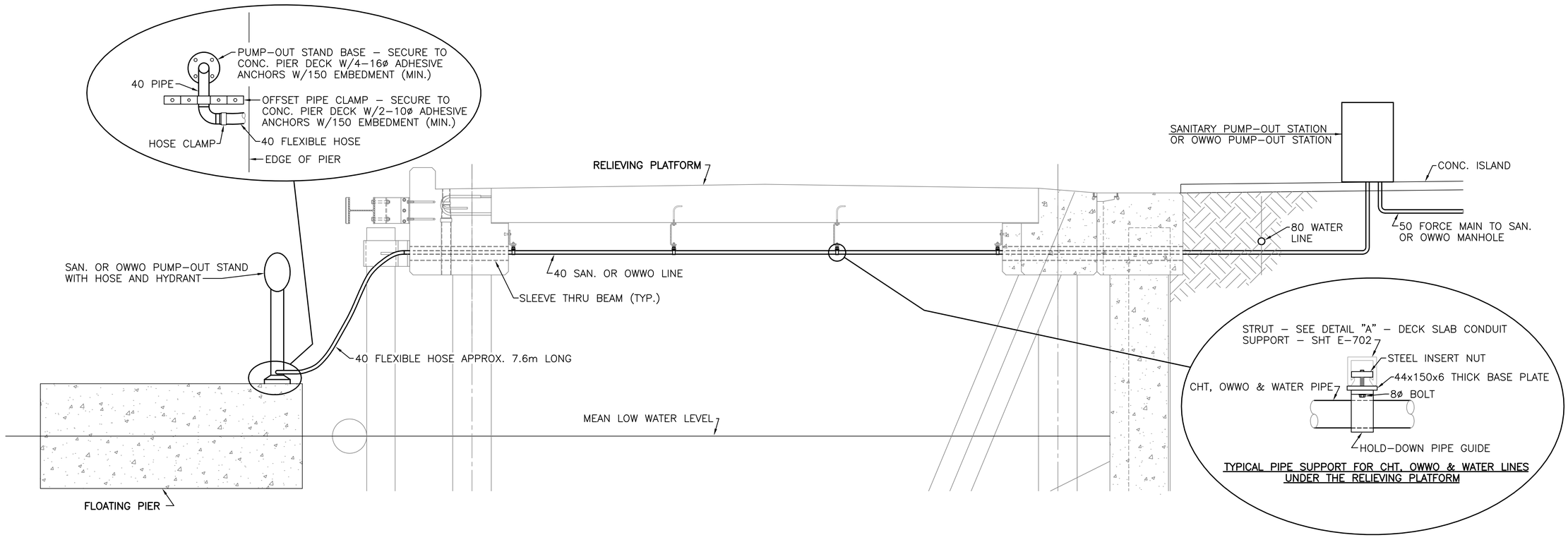

SANITARY OR OWWO PUMP-OUT STATION – ELEVATION

NO SCALE

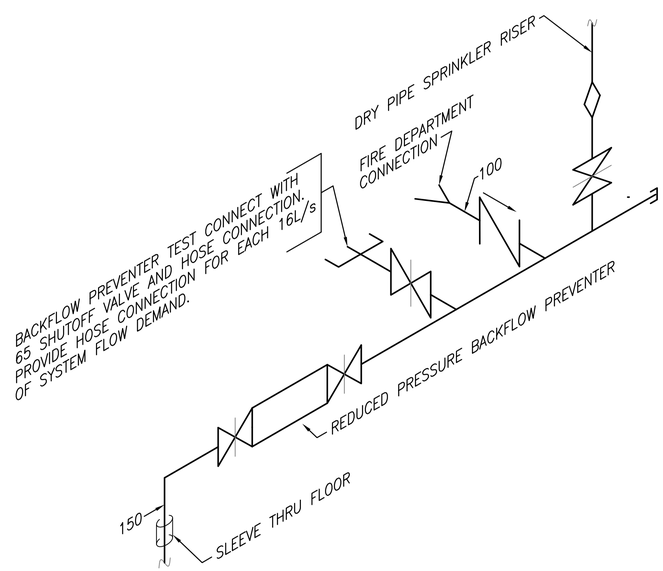

SPRINKLER RISER SCHEMATIC

NO SCALE

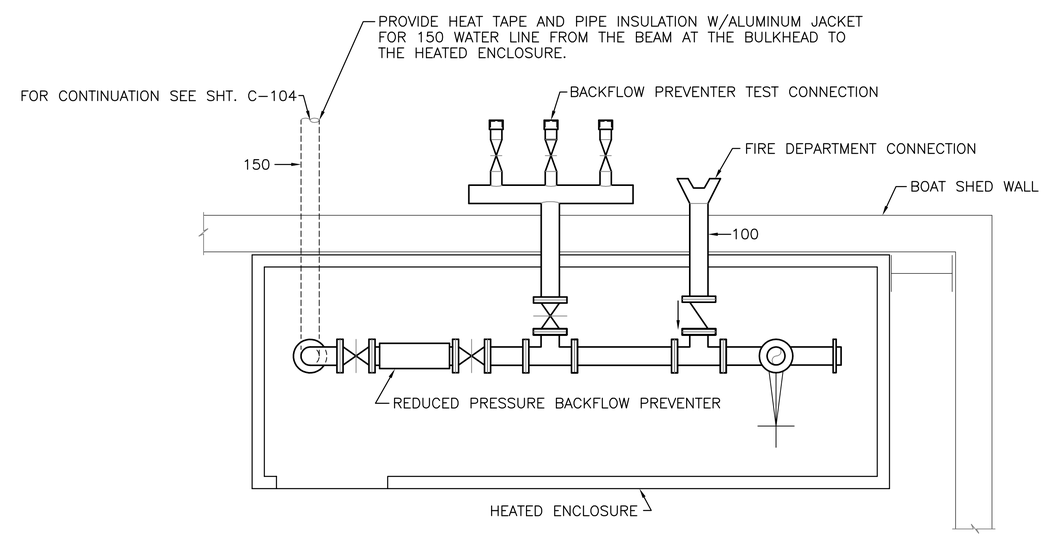

PLAN – FIRE PROTECTION SPRINKLER STANDPIPE

NO SCALE

SYM.	DESCRIPTION	DATE	APPR

DESIGNED & ENGINEERED BY: LANTDIV NAVAL FACILITIES ENGINEERING COMMAND

SEAL

APPROVED

ACTIVITY – SATISFACTORY TO

DATE

APPROVED J.P. Bowen

FOR EFD FOR COMMANDER NAVFAC 10/02/03

DATE

A/E	EFD
DESIGN	WWH
DRAWN	WWH
REVIEW	RDD
QC	
CHIEF ARCH./ ENGR.	
PROJECT MANAGER	KB
FIRE PROTECTION	
BRANCH MANAGER	JTM
DESIGN DIRECTOR	

DEPARTMENT OF THE NAVY
NAVAL STATION
NAVAL FACILITIES ENGINEERING COMMAND
ATLANTIC DIVISION
NORFOLK, VIRGINIA
NAVAL STATION
NORFOLK, VIRGINIA

SMALL CRAFT BASIN

DETAILS – SAN./OW & FIRE PROTECTION

CODE ID. NO. 80091 | SIZE D

SCALE: NONE

EFD NO.

STA. PROJ. NO. P-094

SPEC. NO. 05-03-3066

CONSTR. CONTR. NO. N62470-03-B-3066

NAVFAC DRAWING NO. 4501344

SHEET 107 OF 123

M-501

DRAWFORM REVISION MAY 2000

FILENAME: 3066M501.DWG, UPDATED ON 09/25/03 AT 15:52, XREFS: NONE

PLAN LEGEND

- UNDERGROUND DUCTBANK, CONCRETE ENCASED UON. DESCRIPTION AS INDICATED.
- EXISTING UNDERGROUND DUCTBANK, CONCRETE ENCASED UON. DESCRIPTION AS INDICATED.
- MANHOLE (TYPE 3) OR HANDHOLE (TYPE 4). SEE SHEET E-701 FOR MANHOLE AND HANDHOLE DETAILS.
- EXISTING MANHOLE.
- DUCT/CONDUIT SHALL BE 155mm UON.
- DUCTBANK SECTION LOOKING IN DIRECTION OF ARROWS.
- SPARE DUCT (TYPICAL).
- HEAVY LINE INDICATES BOTTOM OF DUCT.
- EXIST CABLE DESIGNATION (TYPICAL). DESCRIPTION PER CABLE SCHEDULE ON SHEET E-501.
- #4/0 BARE COPPER CONDUCTOR PLACED IN BOTTOM OF DUCTBANK ENCASEMENT.
- OCCUPIED DUCT, UNIDENTIFIED CABLE.
- NEW CABLE DESIGNATION (TYPICAL). DESCRIPTION PER CABLE SCHEDULE ON SHEET E-501.
- INDICATES FRONT.
- EXISTING PAD-MOUNTED TRANSFORMER.
- FLOODLIGHT H.I.D. LIGHTING FIXTURE
- WALLPACK H.I.D. LIGHTING FIXTURE
- EXIT SIGN.
- LOW BAY INDUSTRIAL H.I.D.
- FLUORESCENT LIGHTING FIXTURE
- EMERGENCY BATTERY POWERED LIGHTING UNIT.
- S — SINGLE POLE SWITCH. 20A., 120/277V.
- S_3 — THREE-WAY SWITCH. 20A., 120/277V.
- LIGHTING FIXTURE TYPE. SEE LIGHTING FIXTURE SCHEDULE ON SHEET E-501.
- OR — BRANCH CIRCUIT OR FEEDER WIRING IN CONDUIT. NO TICK MARKS INDICATE 2 #12 CONDUCTORS & 1 #12 GND. IN 16mm CONDUIT UON. TICK MARKS, WHEN SHOWN, INDICATE NUMBER OF #12 CONDUCTORS IF OTHER THAN THREE; (7) INDICATES GROUND. CONDUIT LARGER THAN 16mm & WIRE LARGER THAN #12 SHALL BE AS INDICATED. CONDUIT SHALL BE FIBERGLASS UNLESS OTHERWISE NOTED.
- A-1,3,5 — HOMERUNS TO PANEL. PANEL & CIRCUIT DESIGNATIONS AS INDICATED.
- 3P 60/40 — DISCONNECT SWITCH. 600V IN NEMA 3R ENCLOSURE UON. 3P = NO. OF POLES, 60 = SWITCH RATING, 40 = FUSE RATING (NF INDICATES NON-FUSIBLE).
- ELECTRICAL PANELBOARD (208Y/120 VOLT).
- ELECTRICAL PANELBOARD (480Y/277 VOLT).
- $_1$ — PUSHBUTTON, SUBSCRIPT "1" INDICATES FORWARD/REVERSE. SUBSCRIPT "2" INDICATES UP/DOWN. SUBSCRIPT "3" INDICATES OPEN/CLOSE/STOP.
- MAGNETIC MOTOR CONTROLLER
- GFI — DUPLEX CONVENIENCE RECEPTACLE WITH INTERNAL GROUND FAULT PROTECTION. 20A., 125 VAC.
- F — SPRINKLER FLOW SWITCH
- P — AIR SUPERVISORY SWITCH
- F — MASTER FIRE ALARM BOX
- T — TROUBLE BELL
- M 1/2 — MOTOR CONNECTION, HP INDICATED
- J — JUNCTION BOX
- E — EQUIPMENT CONNECTION AS NOTED

POWER RISER DIAGRAM LEGEND

- EXISTING OVERHEAD LINE.
- REMOVE EXISTING OVERHEAD LINE.
- EXISTING OVERHEAD LINE TAP.
- TERMINAL POLE.
- EXISTING UNDERGROUND CABLE.
- REMOVE EXISTING UNDERGROUND CABLE.
- UNDERGROUND CABLE.
- CONTINUATION
- OR 3434 — PROVIDE SPLICE. NUMBER INDICATES MANHOLE WHERE SPLICE IS PROVIDED.
- MOLDED CASE CIRCUIT BREAKER.
- XXX — EXISTING PAD-MOUNTED INTERRUPTER SWITCHGEAR. XXX INDICATES SWITCHGEAR DESIGNATION.
- EXISTING AIR SWITCH.
- FUSED SWITCH.
- GROUND CONNECTION.
- XXXX OR XXXXX — POWER TRANSFORMER. XXXX INDICATES TRANSFORMER DESIGNATION.
- A — EXISTING CABLE. SEE CABLE SCHEDULE ON SHEET E-501.
- 1 — CABLE. SEE CABLE SCHEDULE ON SHEET E-501.
- M 1/2 — MOTOR CONNECTION, HP INDICATED

ABBREVIATIONS

A	AMPERES
AFF	ABOVE FINISHED FLOOR
AFG	ABOVE FINISHED GRADE
C	CONDUIT
CKT	CIRCUIT
EXIST	EXISTING
GFI	GROUND FAULT INTERRUPTER
GND	GROUND
GS	GALVANIZED STEEL
KAIC	KILOAMPERES INTERRUPTING CAPACITY
KV	KILOVOLTS
KVA	KILOVOLT-AMPERES
MCB	MAIN CIRCUIT BREAKER
MH	MANHOLE
m	METERS
mm	MILLIMETERS
MT	MOUNT
MTD	MOUNTED
NO.	NUMBER
OW/WO	OILY WASTE/WASTE OIL
P	POLE
PMT	PAD MOUNTED TRANSFORMER
PVC	POLYVINYL CHLORIDE
RECEPT(S)	RECEPTACLE(S)
RGS	RIGID GALVANIZED STEEL
SAN	SANITARY
STR. LTS.	STREET LIGHTS
TYP	TYPICAL
UON	UNLESS OTHERWISE NOTED
V	VOLTS
W	WIRE
XFMR	TRANSFORMER

GENERAL NOTES

1. UNLESS OTHERWISE INDICATED ALL ELECTRICAL WORK AND MATERIAL IS NEW AND SHALL BE PROVIDED BY THE CONTRACTOR.
2. ALL DIMENSIONS SHOWN ARE IN MILLIMETERS (mm) UON.

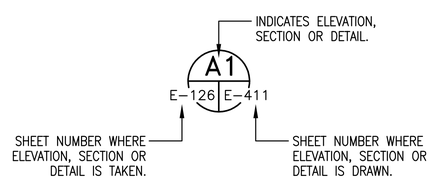

ELEVATION, SECTION OR DETAIL SYMBOL

SYM.	DESCRIPTION	DATE	APPR

DESIGNED & ENGINEERED BY: LANTDIV NAVAL FACILITIES ENGINEERING COMMAND

SEAL

APPROVED

ACTIVITY – SATISFACTORY TO

DATE

APPROVED J.P. Bowen FOR EFD FOR COMMANDER NAVFAC 10/02/03

DATE

A/E	EFD
DESIGN	DAE
DRAWN	DAE
REVIEW	HTO
QC	
CHIEF ARCH./ ENGR.	
PROJECT MANAGER	KB
FIRE PROTECTION	
BRANCH MANAGER	
DESIGN DIRECTOR	

DEPARTMENT OF THE NAVY
NAVAL STATION NORFOLK, VIRGINIA
NAVAL FACILITIES ENGINEERING COMMAND
ATLANTIC DIVISION
NORFOLK, VIRGINIA

SMALL CRAFT BASIN

LEGEND

CODE ID. NO. 80091 | SIZE D

SCALE: NONE

EFD NO.

STA. PROJ. NO. P-094

SPEC. NO. 05-03-3066

CONSTR. CONTR. NO. N62470-03-B-3066

NAVFAC DRAWING NO. 4501345

SHEET 108 OF 123

E-001

DRAWFORM REVISION MAY 2000

FILENAME: 0960E-001.DWG, UPDATED ON 09/24/03 AT 14:33, XREFS: 0960PROJ-INFO

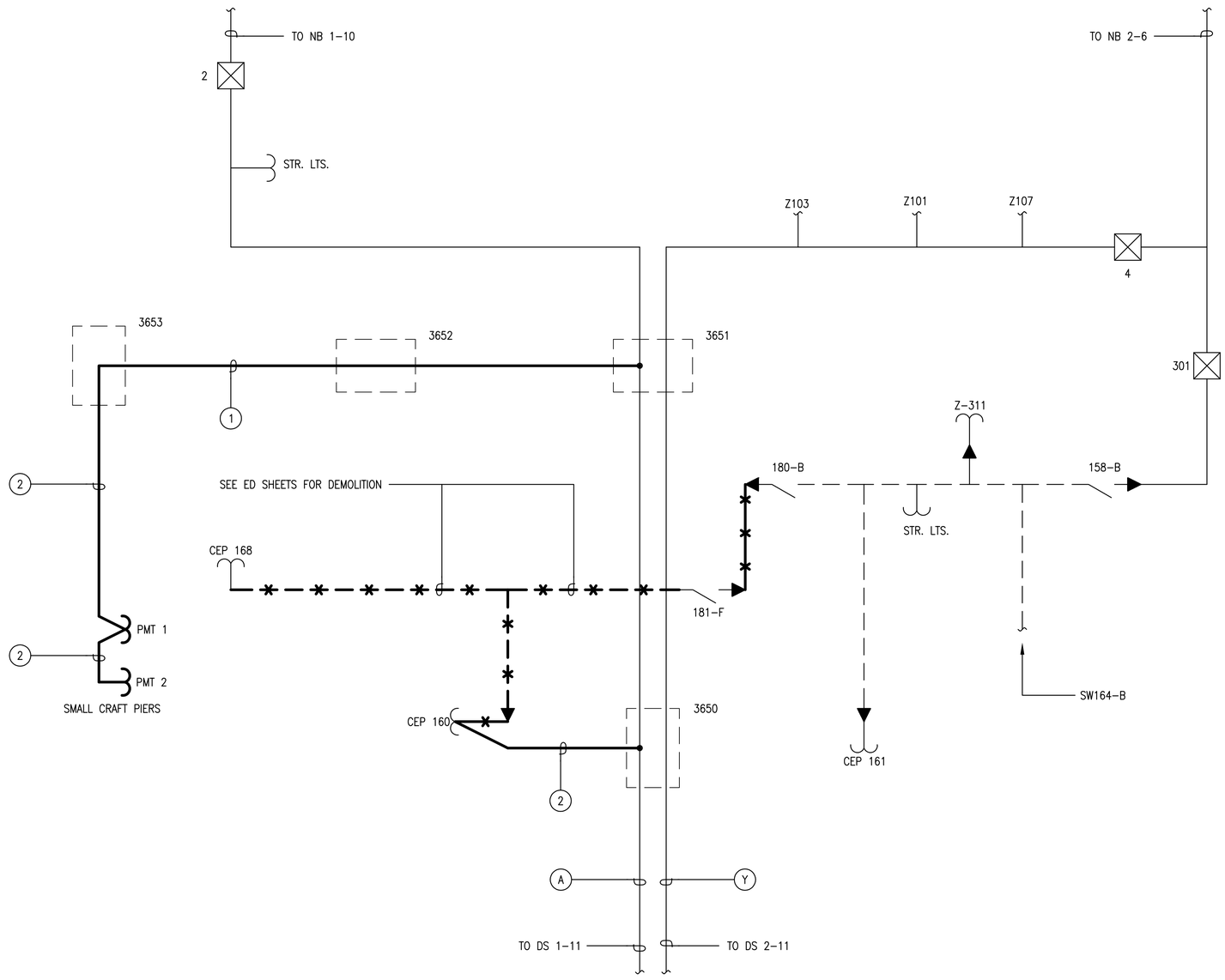

SMALL CRAFT BASIN
11.5KV POWER RISER DIAGRAM

STM.	DESCRIPTION	DATE	APPR

DESIGNED & ENGINEERED BY:
LANTDIV
NAVAL FACILITIES ENGINEERING COMMAND

SEAL

APPROVED

ACTIVITY – SATISFACTORY TO

DATE

APPROVED
J P Bowen
FOR EFD FOR COMMANDER NAVFAC
10/02/03

DATE

A/E		EFD
	DESIGN	DAE
	DRAWN	DAE
	REVIEW	HTO
	QC	
	CHIEF ARCH./ ENGR.	
PROJECT MANAGER		KB
FIRE PROTECTION		
BRANCH MANAGER		
DESIGN DIRECTOR		

DEPARTMENT OF THE NAVY
NAVAL STATION
NAVAL STATION
NORFOLK, VIRGINIA

NAVAL FACILITIES ENGINEERING COMMAND
ATLANTIC DIVISION
NORFOLK, VIRGINIA

SMALL CRAFT BASIN

11.5KV POWER RISER DIAGRAM

CODE ID. NO. 80091 | SIZE D

SCALE: NONE

EFD NO.

STA. PROJ. NO. P-094

SPEC. NO. 05-03-3066

CONSTR. CONTR. NO.
N62470-03-B-3066

NAVFAC DRAWING NO.
4501346

SHEET 109 OF 123

E-101

DRAWFORM REVISION MAY 2000

FILENAME: 0960E-101.DWG, UPDATED ON 09/24/03 AT 10:27, XREFS: 0960PROJ-INFO

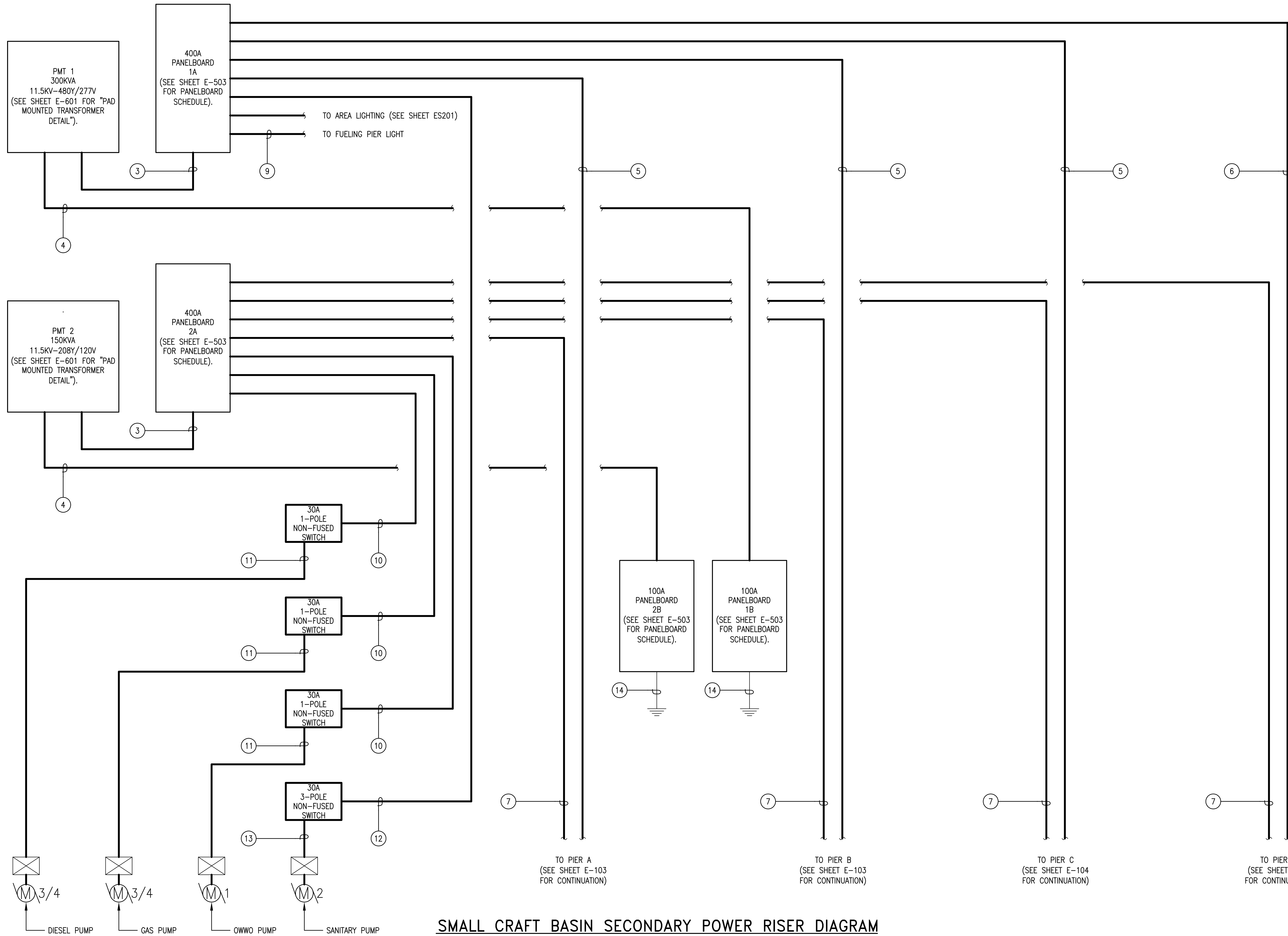

SMALL CRAFT BASIN SECONDARY POWER RISER DIAGRAM

FILENAME: 0960E-102.DWG, UPDATED ON 09/24/03 AT 10:48, XREFS: 0960PROJ-INFO

DESIGNED & ENGINEERED BY:
LANTDIV
NAVAL FACILITIES ENGINEERING COMMAND

APPROVED
ACTIVITY - SATISFACTORY TO
DATE
APPROVED
H.P. Bowen
FOR EFD FOR COMMANDER NAVFAC
10/02/03
DATE

A/E		EFD
	DESIGN	DAE
	DRAWN	DAE
	REVIEW	HTO
	QC	
	CHIEF ARCH./ ENGR.	
PROJECT MANAGER		KB
FIRE PROTECTION		
BRANCH MANAGER		
DESIGN DIRECTOR		

DEPARTMENT OF THE NAVY
NAVAL FACILITIES ENGINEERING COMMAND
ATLANTIC DIVISION
NORFOLK, VIRGINIA
NAVAL STATION
NAVAL STATION NORFOLK, VIRGINIA

SMALL CRAFT BASIN
SECONDARY POWER RISER DIAGRAM

CODE ID. NO. 80091 SIZE D
SCALE: NONE
EFD NO.
STA. PROJ. NO. P-094
SPEC. NO. 05-03-3066
CONSTR. CONTR. NO. N62470-03-B-3066
NAVFAC DRAWING NO. 4501347
SHEET 110 OF 123

E-102

DRAWFORM REVISION MAY 2000

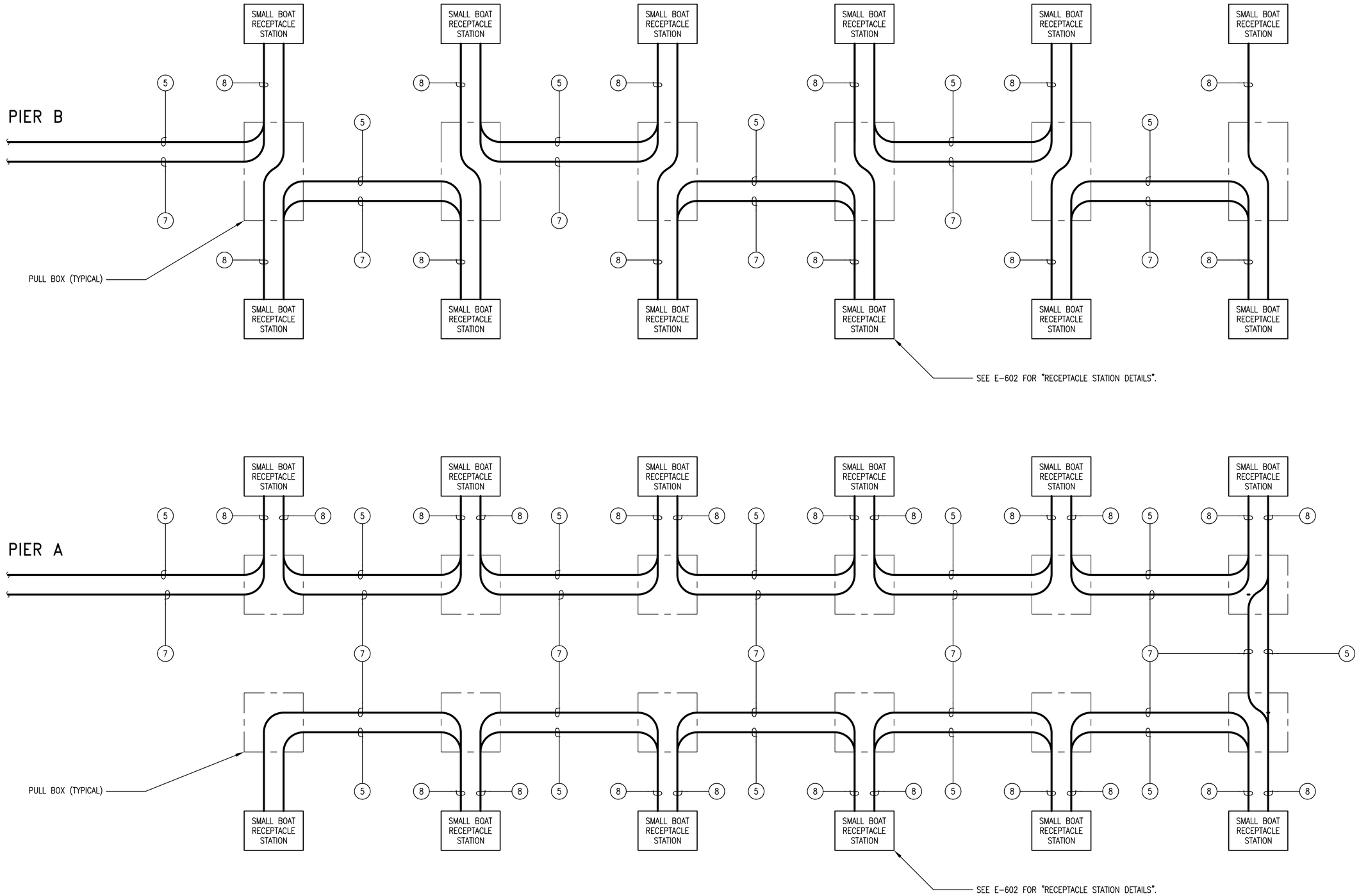

PIERS A & C POWER RISER DIAGRAMS

DESIGNED & ENGINEERED BY:	LANTDIV NAVAL FACILITIES ENGINEERING COMMAND
APPROVED	
ACTIVITY – SATISFACTORY TO	
DATE	
APPROVED	J P Bowen
FOR EFD FOR COMMANDER NAVFAC	10/02/03
DATE	
A/E	EFD
DESIGN	DAE
DRAWN	DAE
REVIEW	HTO
QC	
CHIEF ARCH./ ENGR.	
PROJECT MANAGER	KB
FIRE PROTECTION	
BRANCH MANAGER	
DESIGN DIRECTOR	

DEPARTMENT OF THE NAVY
NAVAL FACILITIES ENGINEERING COMMAND
ATLANTIC DIVISION
NAVAL STATION NORFOLK, VIRGINIA
NAVAL STATION NORFOLK, VIRGINIA
SMALL CRAFT BASIN
PIERS A & C POWER RISER DIAGRAMS

CODE ID. NO. 80091	SIZE D
SCALE: NONE	
EFD NO.	
STA. PROJ. NO. P-094	
SPEC. NO. 05-03-3066	
CONSTR. CONTR. NO. N62470-03-B-3066	
NAVFAC DRAWING NO. 4501348	
SHEET 111 OF 123	
E-103	

DRAWFORM REVISION MAY 2000

FILENAME: 0960E-103.DWG, UPDATED ON 09/24/03 AT 10:47, XREFS: 0960PROJ-INFO

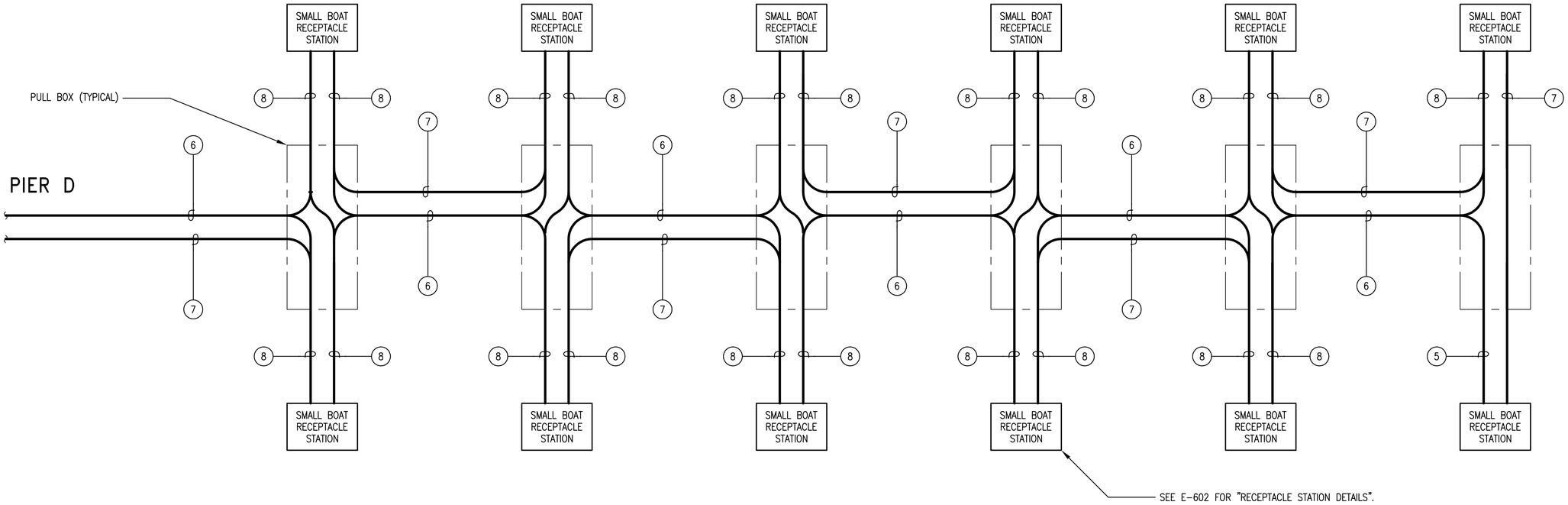

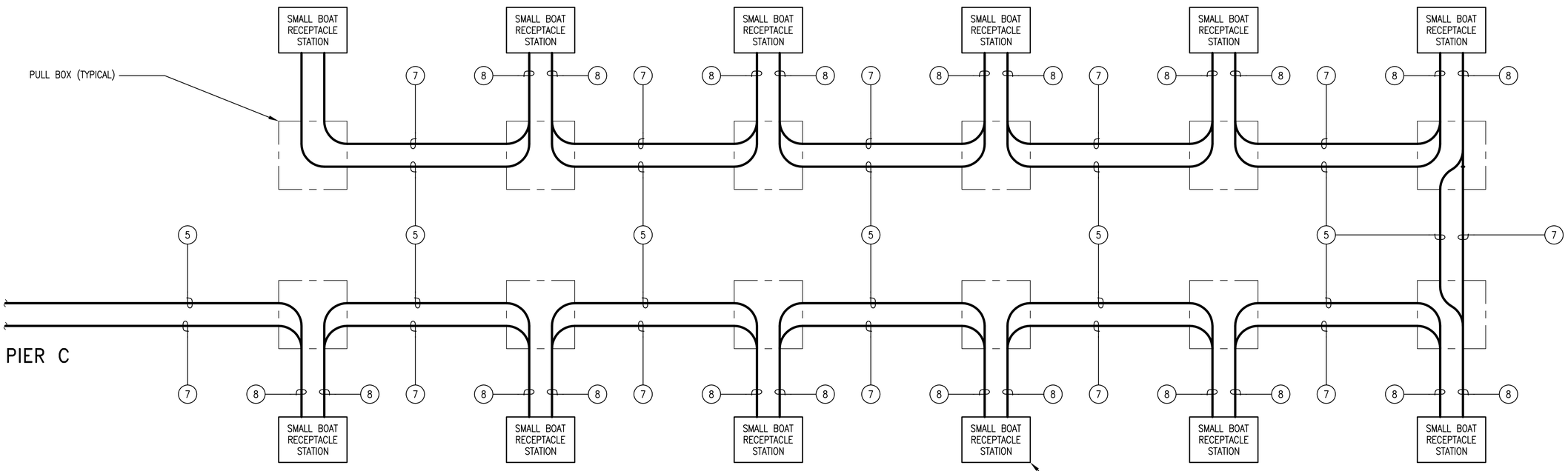

PIERS B & D POWER RISER DIAGRAMS

DESIGNED & ENGINEERED BY:	LANTDIV NAVAL FACILITIES ENGINEERING COMMAND
APPROVED	
ACTIVITY – SATISFACTORY TO	
DATE	
APPROVED	J.P. Bowen
FOR EFD FOR COMMANDER NAVFAC	10/02/03
DATE	
A/E	EFD
DESIGN	DAE
DRAWN	DAE
REVIEW	HTO
QC	
CHIEF ARCH./ ENGR.	
PROJECT MANAGER	KB
FIRE PROTECTION	
BRANCH MANAGER	
DESIGN DIRECTOR	

DEPARTMENT OF THE NAVY
NAVAL FACILITIES ENGINEERING COMMAND
ATLANTIC DIVISION
NAVAL STATION NORFOLK, VIRGINIA
NAVAL STATION NORFOLK, VIRGINIA
SMALL CRAFT BASIN
PIERS B & D POWER RISER DIAGRAMS

CODE ID. NO. 80091	SIZE D
SCALE: NONE	
EFD NO.	
STA. PROJ. NO. P-094	
SPEC. NO. 05-03-3066	
CONSTR. CONTR. NO. N62470-03-B-3066	
NAVFAC DRAWING NO. 4501349	
SHEET 112 OF 123	
E-104	

DRAWFORM REVISION MAY 2000

FILENAME: 0960E-104.DWG, UPDATED ON 09/24/03 AT 10:33, XREFS: 0960PROJ-INFO

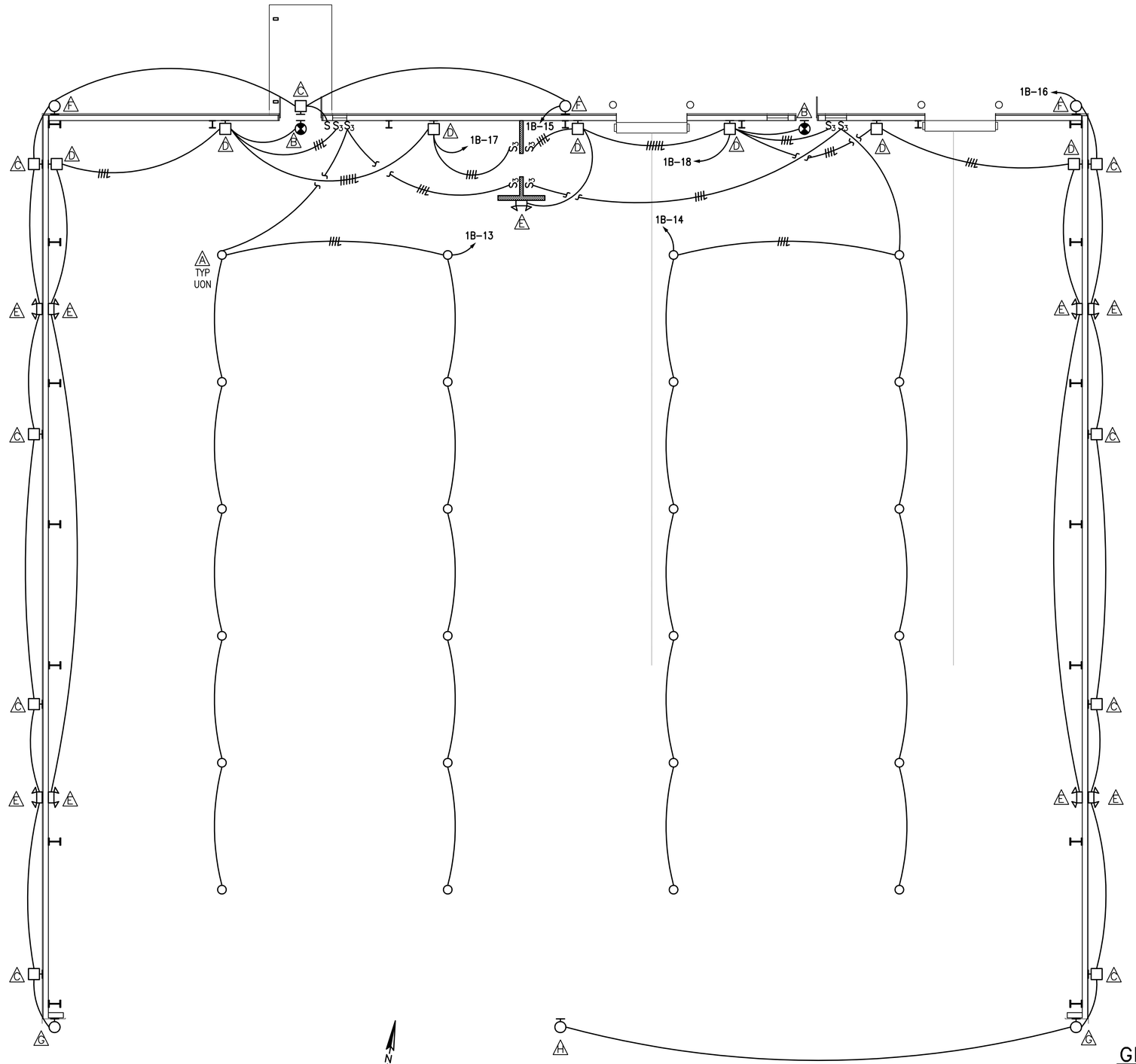

BOAT SHED LIGHTING PLAN

SCALE: 1=100

GRAPHIC SCALE

1:100 01000 5000 10000mm

DATE	APPR	DESCRIPTION	STM.

DESIGNED & ENGINEERED BY:
LANTDIV
NAVAL FACILITIES ENGINEERING COMMAND

SEAL

APPROVED

ACTIVITY – SATISFACTORY TO

DATE

APPROVED
J.P. Bowen
FOR EFD FOR COMMANDER NAVFAC
10/02/03

DATE

	A/E	EFD
DESIGN		DAM
DRAWN		DAM
REVIEW		PCH
QC		
CHIEF ARCH./ ENGR.		
PROJECT MANAGER		KB
FIRE PROTECTION		
BRANCH MANAGER		
DESIGN DIRECTOR		

DEPARTMENT OF THE NAVY
NAVAL FACILITIES ENGINEERING COMMAND
ATLANTIC DIVISION
NORFOLK, VIRGINIA
NAVAL STATION
NORFOLK, VIRGINIA

SMALL CRAFT BASIN

BOAT SHED LIGHTING PLAN

CODE ID. NO. 80091 | SIZE D

SCALE: AS NOTED

EFD NO.

STA. PROJ. NO. P-094

SPEC. NO. 05-03-3066

CONSTR. CONTR. NO.
N62470-03-B-3066

NAVFAC DRAWING NO.
4501350

SHEET 113 OF 123

E-201

DRAWFORM REVISION SEPT 2001

FILENAME: 0960E-201.DWG, UPDATED ON 09/24/03 AT 16:22. XREFS: 0960PROJ-INFO, MODEL

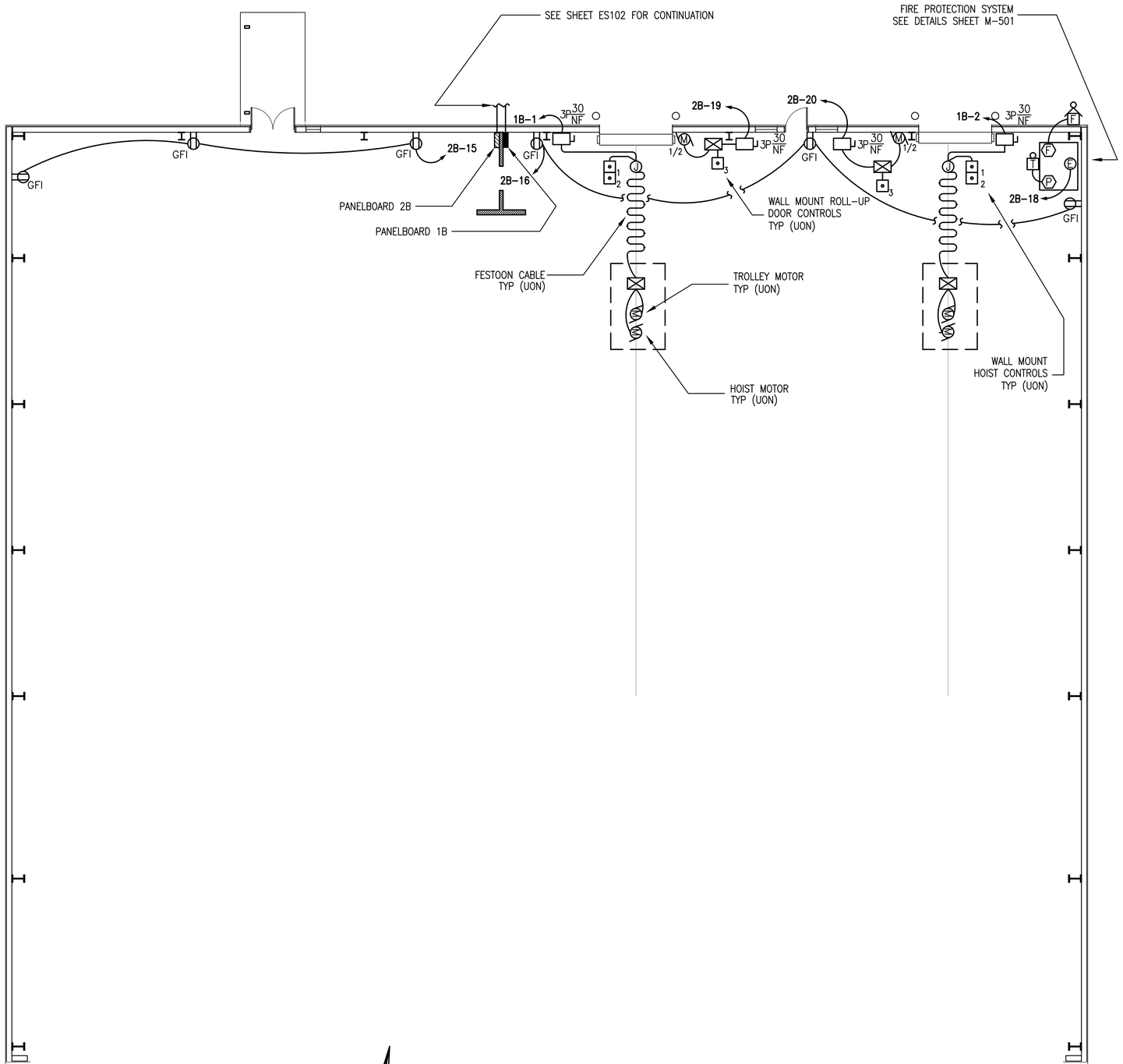

N

BOAT SHED POWER PLAN

SCALE: 1=100

GRAPHIC SCALE

1:100 01000 5000 10000mm

SYM.	DESCRIPTION	DATE	APPR.

DESIGNED & ENGINEERED BY:
LANTDIV
NAVAL FACILITIES ENGINEERING COMMAND

SEAL

APPROVED

ACTIVITY – SATISFACTORY TO

DATE

APPROVED
J P Bowen
FOR EFD FOR COMMANDER NAVFAC
10/02/03

DATE

A/E		EFD
	DESIGN	DAM
	DRAWN	DAM
	REVIEW	PCH
	QC	
	CHIEF ARCH./ ENGR.	
	PROJECT MANAGER	KB
	FIRE PROTECTION	
	BRANCH MANAGER	
	DESIGN DIRECTOR	

DEPARTMENT OF THE NAVY
NAVAL FACILITIES ENGINEERING COMMAND
ATLANTIC DIVISION
NORFOLK, VIRGINIA
NAVAL STATION
NAVAL STATION
NORFOLK, VIRGINIA

SMALL CRAFT BASIN

BOAT SHED POWER PLAN

CODE ID. NO. 80091 | SIZE D

SCALE: AS NOTED

EFD NO.

STA. PROJ. NO. P-094

SPEC. NO. 05-03-3066

CONSTR. CONTR. NO.
N62470-03-B-3066

NAVFAC DRAWING NO.
4501351

SHEET 114 OF 123

E-202

DRAWFORM REVISION SEPT 2001

FILENAME: 0960E-202.DWG, UPDATED ON 09/24/03 AT 11:15, XREFS: 0960PROJ-INFO, MODEL

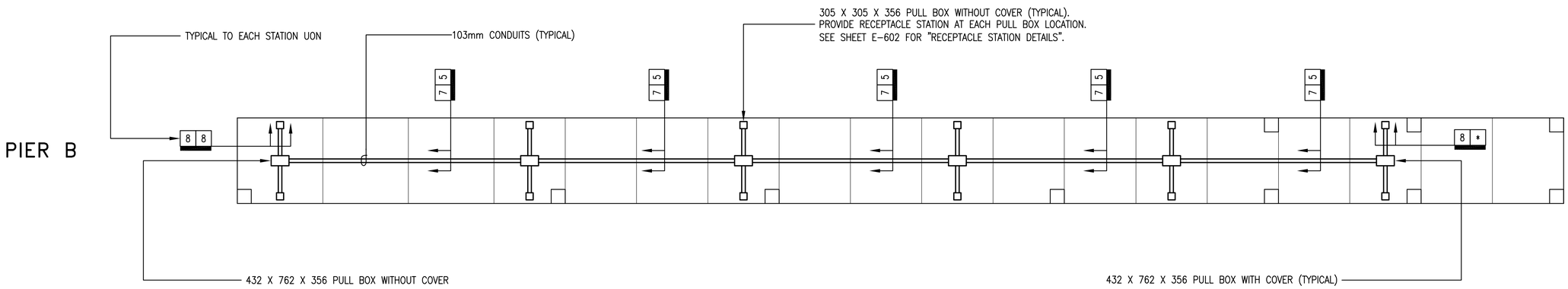

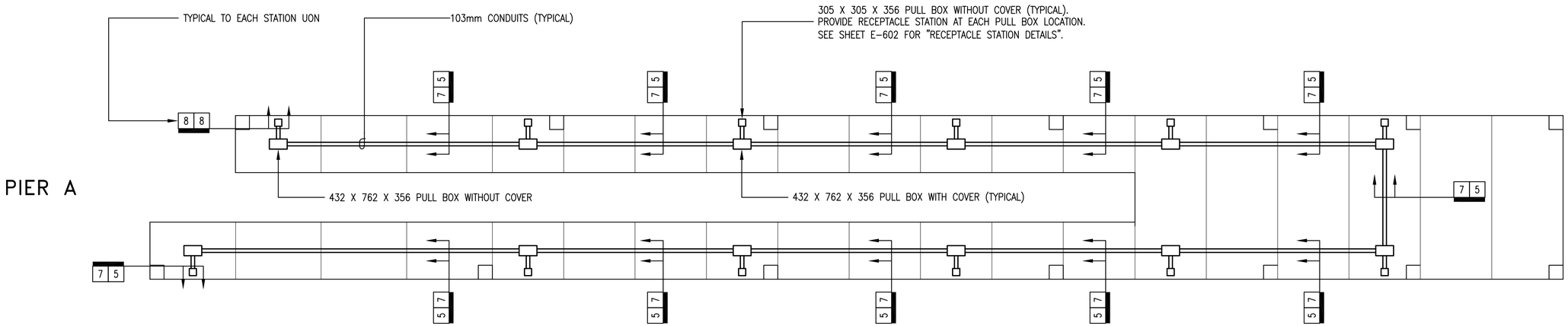

PIERS A AND B PLANS

1:100 01000 5000 10000mm

SYM.	DESCRIPTION	DATE	APPR.

DESIGNED & ENGINEERED BY:
LANTDIV
NAVAL FACILITIES ENGINEERING COMMAND

SEAL

APPROVED
ACTIVITY – SATISFACTORY TO
DATE
APPROVED
FOR EFD FOR COMMANDER NAVFAC
10/02/03
DATE

A/E		EFD
	DESIGN	DAM
	DRAWN	DAM
	REVIEW	PCH
	QC	
	CHIEF ARCH./ ENGR.	
	PROJECT MANAGER	KB
	FIRE PROTECTION	
	BRANCH MANAGER	
	DESIGN DIRECTOR	

DEPARTMENT OF THE NAVY
NAVAL STATION
NAVAL STATION
NORFOLK, VIRGINIA
NORFOLK, VIRGINIA
NAVAL FACILITIES ENGINEERING COMMAND
ATLANTIC DIVISION

SMALL CRAFT BASIN

PIERS A AND B PLANS

CODE ID. NO. 80091 SIZE D
SCALE: AS NOTED
EFD NO.
STA. PROJ. NO. P-094
SPEC. NO. 05-03-3066
CONSTR. CONTR. NO.
N62470-03-B-3066
NAVFAC DRAWING NO.
4501352
SHEET 115 OF 123
E-203

DRAWFORM REVISION SEPT 2001

FILENAME: 0960E-203.DWG, UPDATED ON 09/24/03 AT 11:22, XREFS: 0960E-BASIN ELEC, MASTER, 0960PROJ-INFO

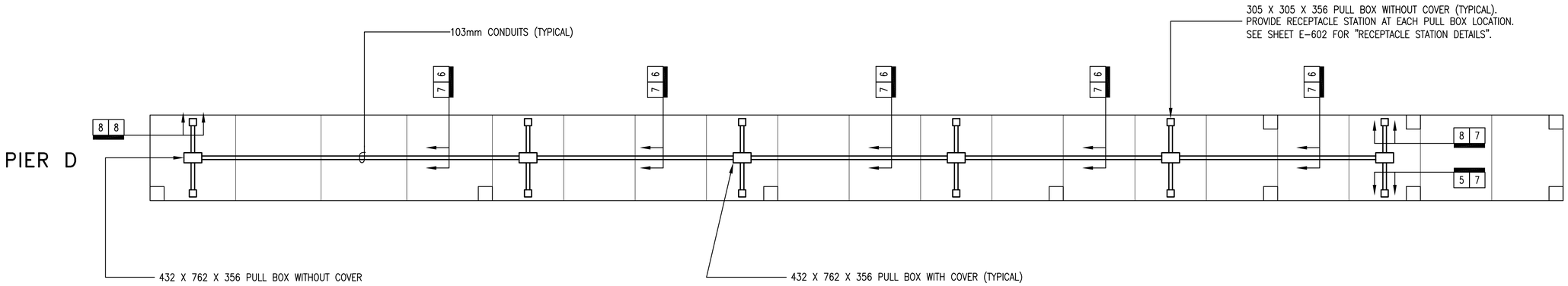

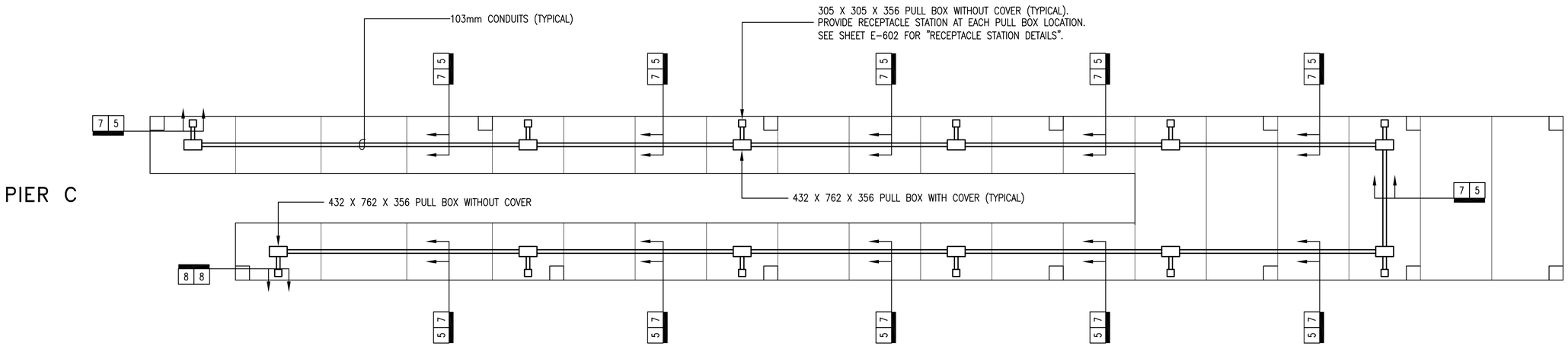

PIERS C AND D PLANS

1:100 01000 5000 10000mm

SYM.	DESCRIPTION	DATE	APPR.

DESIGNED & ENGINEERED BY:
LANTDIV
NAVAL FACILITIES ENGINEERING COMMAND

SEAL

APPROVED
ACTIVITY – SATISFACTORY TO
DATE
APPROVED
FOR EFD FOR COMMANDER NAVFAC
10/02/03
DATE

A/E		EFD
	DESIGN	DAM
	DRAWN	DAM
	REVIEW	PCH
	QC	
	CHIEF ARCH./ ENGR.	
	PROJECT MANAGER	KB
	FIRE PROTECTION	
	BRANCH MANAGER	
	DESIGN DIRECTOR	

DEPARTMENT OF THE NAVY
NAVAL FACILITIES ENGINEERING COMMAND
ATLANTIC DIVISION
NORFOLK, VIRGINIA
NAVAL STATION
NAVAL STATION
NORFOLK, VIRGINIA
SMALL CRAFT BASIN
PIERS C AND D PLANS

CODE ID. NO. 80091 | SIZE D
SCALE: AS NOTED
EFD NO.
STA. PROJ. NO. P-094
SPEC. NO. 05-03-3066
CONSTR. CONTR. NO.
N62470-03-B-3066
NAVFAC DRAWING NO.
4501353
SHEET 116 OF 123
E-204

DRAWFORM REVISION SEPT 2001

FILENAME: 0960E-204.DWG, UPDATED ON 09/24/03 AT 11:23, XREFS: 0960E-BASIN ELEC, MASTER, 0960PROJ-INFO

SMALL CRAFT BASIN CABLE SCHEDULE

CABLE IDENTIFICATION	DESCRIPTION	CONDUIT SIZE (mm)	NOTES
1	3 – 1/C 500KCMIL, 15KV		
2	1 – 3/C 4/0, 15KV		PROVIDE 200A LOAD BREAK SEPARABLE CONNECTORS FOR TERMINATION OF CONDUCTORS FOR CEP160 PAD MOUNT TRANSFORMER.
3	4 – 1/C 350KCMIL, 600V, AND 1 #2 BARE CU GROUND	103	
4	4 – 1/C #2, 600V		
5	1 – 3/C #1, 2000V WITH 1 – #6 UNINSULATED GROUNDING CONDUCTOR		CONDUCTORS SHALL BE PORTABLE POWER CABLE, TYPE G.
6	2 – 3/C #1, 2000V WITH 1 – #6 UNINSULATED GROUNDING CONDUCTOR		CONDUCTORS SHALL BE PORTABLE POWER CABLE, TYPE G.
7	1 – 2/C #1 & 1 – 3/C #1, 2000V WITH 1 – #6 UNINSULATED GROUNDING CONDUCTOR		CONDUCTORS SHALL BE PORTABLE POWER CABLE, TYPE G.
8	1 – 2/C #1 & 2 – 3/C #1, 2000V WITH 1 – #6 UNINSULATED GROUNDING CONDUCTOR		CONDUCTORS SHALL BE PORTABLE POWER CABLE, TYPE G.
9	2 #12 & 1 #12 GROUND, 600V	27	
10	2 #10 & 1 #10 GROUND, 600V	27	
11	2 #10 & 1 #10 GROUND, 600V	27	PROVIDE THREADED RIGID METAL CONDUIT. CONDUITS SHALL BE SEALED AT TERMINATION.
12	3 #12 & 1 #12 GROUND, 600V	27	
13	3 #12 & 1 #12 GROUND, 600V	27	PROVIDE THREADED RIGID METAL CONDUIT. CONDUITS SHALL BE SEALED AT TERMINATION.
14	1 #8, 600V	21	CONNECT GROUNDING ELECTRODE TO STEEL BUILDING STRUCTURE.
15	2 #8, 600V	21	SPLICE CONDUCTORS TO EXISTING BASE FIRE ALARM LOOP CIRCUIT CABLE IN PIER 6 TELCOM MANHOLE.
16			
17			
18			
19			
20			
A	3 – 1/C 500KCMIL, 15KV		
X			
Y	3 – 1/C 500KCMIL, 15KV		
Z	3 – 1/C 750KCMIL, 35KV		

LIGHTING FIXTURE SCHEDULE

FIXTURE SYMBOL	SKETCH NO. & TYPE	NUMBER AND TYPE OF LAMPS	VOLTAGE	MOUNTING	NOTES
A	NL–23, TYPE B	250W HPS	277V	PENDANT MT 5486mm AFG	MOUNT 5486mm ABOVE FLOATING PIER (3660mm ABOVE RELIEVING PLATFORM)
B		LED	277V	WALL MT 2440mm AFF	
C	NL–25, TYPE A	70W HPS	277V	WALL MT 2440mm AFF	PROVIDE WITH INTERGRAL PHOTO CELL
D	NL–25, TYPE B	100W HPS	277V	WALL MT 2440mm AFF	
E		2–20 WATT PAR–36 HALOGEN	277V	WALL MT 2440mm AFF	
F	XL–2	400W HPS	277V	TRUNNION MT 4270mm AFG	PROVIDE WITH INTERGRAL PHOTO CELL PROVIDE I.E.S. 7X5 BEAM PATTERN
G	XL–2	400W HPS	277V	TRUNNION MT 4270mm AFG	PROVIDE WITH INTERGRAL PHOTO CELL PROVIDE I.E.S. 3X5 BEAM PATTERN
H	XL–2	400W HPS	277V	TRUNNION MT 6290mm AFG	PROVIDE WITH INTERGRAL PHOTO CELL PROVIDE I.E.S. 3X5 BEAM PATTERN
I		LED	SOLAR	POLE MT 2440mm AFG	

SYM.	DESCRIPTION	DATE	APPR

DESIGNED & ENGINEERED BY:
LANTDIV
NAVAL FACILITIES ENGINEERING COMMAND

SEAL

APPROVED
ACTIVITY – SATISFACTORY TO
DATE
APPROVED
J P Bowen
FOR EFD FOR COMMANDER NAVFAC
10/02/03
DATE

A/E		EFD
	DESIGN	DAE
	DRAWN	DAE
	REVIEW	HTO
	QC	
	CHIEF ARCH./ ENGR.	
	PROJECT MANAGER	KB
	FIRE PROTECTION	
	BRANCH MANAGER	
	DESIGN DIRECTOR	

DEPARTMENT OF THE NAVY
NAVAL FACILITIES ENGINEERING COMMAND
ATLANTIC DIVISION
NORFOLK, VIRGINIA
NAVAL STATION
NORFOLK, VIRGINIA

SMALL CRAFT BASIN

CABLE & LIGHTING FIXTURE SCHEDULES

CODE ID. NO. 80091 | SIZE D
SCALE: NONE
EFD NO.
STA. PROJ. NO. P–094
SPEC. NO. 05–03–3066
CONSTR. CONTR. NO.
N62470–03–B–3066
NAVFAC DRAWING NO.
4501354
SHEET 117 OF 123

E–501

DRAWFORM REVISION MAY 2000

FILENAME: 0960E–501.DWG, UPDATED ON 09/24/03 AT 16:12, XREFS: 0960PROJ–INFO

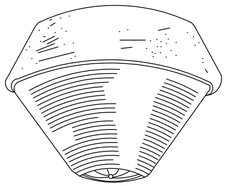

TYPE A – 100–150W HIGH PRESSURE SODIUM
TYPE B – 250–400W

TYPE C – 175W METAL HALIDE
TYPE D – 250–400W

LUMINAIRE REQUIREMENTS

1. SHEET OR CAST ALUMINUM HOUSING. FINISH WITH ENAMEL OR EPOXY. PROVIDE INTERNAL GREEN GROUNDING PROVISIONS.
2. ACRYLIC REFRACTOR OR THERMAL AND SHOCK RESISTANT GLASS LENS.
3. PROVIDE CUSHIONED FIXTURE HANGER. PROVIDE CUSHIONED POWER HOOK WHEN INDICATED.
4. PROVIDE QUARTZ AUXILIARY LAMP AND ARC SENSING RELAY WHEN INDICATED.
5. PROVIDE HIGH POWER FACTOR (≥ .9) ENCASED AND POTTED BALLAST AS SPECIFIED.
6. MINIMUM COEFFICIENT OF UTILIZATION (CU) WITH CAVITY REFLECTANCES OF 80% CEILING, 50% WALL, 20% FLOOR SHALL BE:

RCR	TYPE:	A	B	C	D
1	CU =	79	85	79	80
2		68	73	69	70
3		59	60	60	60
MIN. EFFICIENCY		80%	85%	80%	85%
MIN. SPACING CRITERIA		1.8	1.8	1.8	1.8

7. PROVIDE LAMP AS INDICATED.

LOW BAY INDUSTRIAL H.I.D.

SKETCH DATE JUNE 2002 STYLE NL–23

A

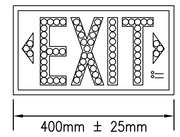

FRONT VIEW

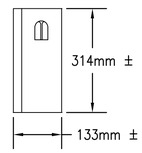

END VIEW

15. PROVIDE LED EXIT SIGNS, SUITABLE FOR USE IN WET/DAMP LOCATIONS. LISTED TO UL STANDARD 924. EXCEED NFPA 101 ILLUMINATION REQUIREMENTS

NOTES:

1. UNIT IS AVAILABLE WITH DAMP LABEL THAT MEETS UL 50 TYPE NEMA 4X STANDARDS AND EXCEEDS NFPA 101 ILLUMINATION REQUIREMENTS.

LUMINAIRE REQUIREMENTS

1. THERMOPLASTIC OR POLYCARBONATE HOUSING.
2. THERMOPLASTIC OR STENCIL WITH LETTERS 150mm TALL AND 20mm WIDE STROKES AND PUNCH–OUT FACE, FOR LED'S OR INTERNAL LED ILLUMINATION.
3. RED ILLUMINATION PROVIDED BY LIGHT EMITTING DIODES (LED). APPROXIMATELY 60 LED'S PER FACE. (THIS QUANTITY DOES NOT APPLY TO INTERNALLY ILLUMINATED SIGNS.)
4. CLEAR PROTECTIVE NON–BREAKABLE LENS TO PROTECT LED'S. (NOT REQUIRED FOR INTERNALLY ILLUMINATED SIGNS.)
5. PROVIDE POWER FAILURE, BLOWN–OUT PROTECTION AND SURGE PROTECTION.
6. PROVIDE NI–CAD BATTERY POWER AND SOLID STATE TYPE CHARGER.
7. PROVIDE UNIVERSAL ARROWS AND BLANK OFF PLATES.
8. PROVIDE SINGLE OR DOUBLE FACE AS INDICATED.
9. PROVIDE UNIVERSAL MOUNTING.
10. UNITS MOUNTED EXPOSED TO THE ELEMENTS OR IN CLASSIFIED AREAS SHALL HAVE UL LABEL AS INDICATED.
11. PROVIDE INTERNAL GREEN GROUNDING SCREW.
12. PROVIDE TEST BUTTON IN BOTTOM OF HOUSING.
13. PROVIDE INDICATOR LIGHTS IN FACE TO INDICATE WHEN UNIT IS ON NORMAL POWER OR ON BATTERY POWER.
14. UNITS MOUNTED EXPOSED TO THE ENVIRONMENT SHALL BE WATERTIGHT, RAINTIGHT, CORROSION RESISTANT, MEET UL 50 TYPE NEMA 4X LABEL AS APPROPRIATE AND SHALL NOT BE CONSTRUCTED OF STEEL.

LED EMERGENCY EXIT SIGN

SKETCH DATE SEPT 2003

B

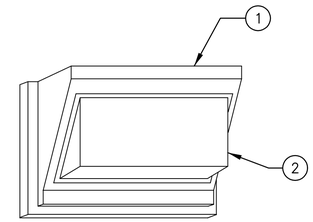

TYPE A – 70W HIGH PRESSURE SODIUM
TYPE B – 100W HIGH PRESSURE SODIUM
TYPE C – 150W HIGH PRESSURE SODIUM
TYPE D – 175W METAL HALIDE
TYPE E – 35W LOW PRESSURE SODIUM

LUMINAIRE REQUIREMENTS

1. HOUSING–DIECAST ALUMINUM, SEALED AND GASKETED. UL LISTED FOR WET LOCATIONS. PROVIDE INTERNAL GREEN GROUNDING SCREW. (DIMENSIONS: APPROXIMATELY 400mmL X 250mmH X 280mmD)
2. REFRACTOR–BOROSILICATE PRISMATIC GLASS. PROVIDE ALUMINUM REFLECTOR.
3. BALLAST–HIGH POWER FACTOR (≥ .9) ENCASED AND POTTED MULTI–VOLTAGE.
4. FINISH–DARK BRONZE, UNLESS OTHERWISE NOTED.
5. LAMP SOCKET SHALL BE ADJUSTABLE.
6. PROVIDE INTEGRAL PHOTOCELL WHEN INDICATED.

EXTERIOR COMMERCIAL WALL MOUNT H.I.D.

SKETCH DATE JUNE 2002 STYLE NL–25

C D

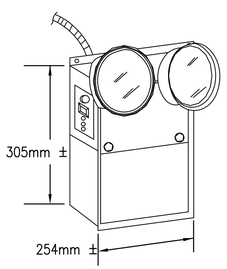

LUMINAIRE REQUIREMENTS

1. SEALED BATTERY, SPECIFICALLY DESIGN FOR EMERGENCY LIGHTING, SOLID STATE FULLY AUTOMATIC – THREE RATE CHARGER FOR NICKEL CADMIUM BATTERY AND TWO RATE HIGH/LOW CHARGER FOR LEAD CALCIUM OR LEAD ACID SEALED BATTERIES.
2. GASKETED CONSTRUCTION CORROSION RESISTANT HARDWARE CHARCOAL GREY THERMOPLASTIC CASE FINISH (GRAY) OR NONMETALLIC PLASTIC HOUSING. HINGED FULL FRONT COVER WITH STAINLESS STEEL HARDWARE
3. TEST SWITCH
4. "AC ON" PILOT LIGHT.
5. AUTOMATIC OVERLOAD PROTECTION – FUSE OR CIRCUIT BREAKER.
6. HEADS SHALL BE FULLY ADJUSTABLE VERTICALLY AND HORIZONTALLY.
7. SEALED BEAM HALOGEN PAR–36 LAMPS, MINIMUM 12 WATT OR 20 WATT AS INDICATED.
8. INPUT VOLTAGE AS INDICATED.
9. UL 924 LISTED (EMERGENCY LIGHTING) NEMA 4X
10. 3/C #16, STO CORD SET – (HARD WIRE TO CIRCUIT)
11. 90 MINUTE OPERATION, MOUNTING BRACKETS OR HOLES IN HOUSING FOR MOUNTING UNIT.
12. LOW VOLTAGE, DEEP DISCHARGE DISCONNECT.
13. PROVIDE INTERNAL GREEN GROUNDING SCREW.

EMERGENCY LIGHTING UNIT

SKETCH DATE SEPTEMBER 2003

E

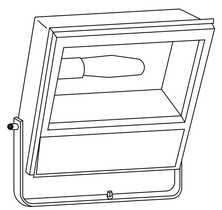

NOTE:
NEMA BEAM SPREAD CONFIGURATION SHALL BE AS INDICATED AND SHALL BE IN ACCORDANCE WITH I.E.S. DEFINITIONS.

LUMINAIRE REQUIREMENTS

1. HOUSING – DIE CAST ALUMINUM OR FORMED AND SEAM WELDED ALUMINUM, WITH BAKED ENAMEL OR POLYESTER POWDER FINISH.
2. REFLECTOR – ANODIZED ALUMINUM.
3. DOOR – HINGED ALUMINUM, WITH GASKET AND CAPTIVE SCREWS OR CAM LATCH FASTENERS.
4. INTEGRAL MULTI–TAP BALLAST.
5. STAINLESS STEEL OR NONCORROSIVE HARDWARE.
6. PORCELAIN SOCKET WITH VIBRATION–PROOF LAMP GRIP SHELL.
7. SLIPFITTER FOR 60mm TENON OR TRUNNION MOUNTING AS INDICATED.
8. PHOTOCELL WHEN INDICATED.
9. LAMP – 70 TO 1000 WATT – TYPE AND WATTAGE AS INDICATED.
10. PROVIDE 3/C #16 WEATHERPROOF CORD, MIN. 610mm LONG (TRUNNION MT. ONLY).
11. LAMP STABILIZER, 1000 WATT SIZE ONLY.
12. LENS – TEMPERED, IMPACT RESISTANT, CLEAR GLASS.
13. UL LISTED – SUITABLE FOR OUTDOOR WET LOCATIONS.
14. HOUSING COLOR SHALL BE DARK BRONZE UNLESS INDICATED OTHERWISE.

MIN. E.P.A. 0.195 SQ. M. – MAX. E.P.A. 0.51 SQ. M.

FLOODLIGHT

SKETCH DATE JUNE 2002 STYLE XL–2

F G H

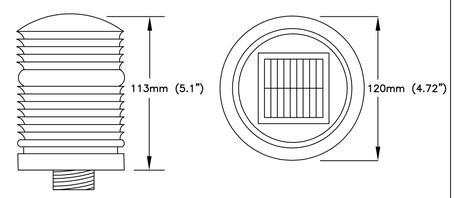

LUMINAIRE REQUIREMENTS

1. LUMINAIRE SHALL BE A RED LIGHT AND PROVIDE VISIBILITY UP TO ONE NAUTICAL MILE (1.8 KILOMETERS).
2. COMPLETELY SELF–CONTAINED AND WATERTIGHT. SUITABLE TO OPERATE RELIABLY IN THE HARSHEST OF ENVIRONMENTAL CONDITIONS.
3. LUMINAIRE SHALL BE SOLAR POWERED AND ILLUMINATED USING MULTIPLE HIGH–INTENSITY LEDs, INTEGRALLY CONTROLLED BY PHOTOCELLS.
4. MOUNT LUMINAIRE ON A 25mm X 2438mm GALVANIZED STEEL RIGID CONDUIT. PROVIDE A 19mm X 203mm x 208mm GALVANIZED STEEL MOUNTING PLATE TO WELD CONDUIT TO.

NAVIGATIONAL LIGHT

SKETCH DATE SEPTEMBER 2003

I

STM.	DESCRIPTION	DATE	APPR

DESIGNED & ENGINEERED BY:
LANTDIV
NAVAL FACILITIES ENGINEERING COMMAND

SEAL

APPROVED

ACTIVITY – SATISFACTORY TO

DATE

APPROVED
J P Bowen
FOR EFD FOR COMMANDER NAVFAC
10/02/03

DATE

A/E		EFD
	DESIGN	DAF
	DRAWN	LDS
	REVIEW	HTO
	QC	
	CHIEF ARCH./ ENGR.	
	PROJECT MANAGER	KB
	FIRE PROTECTION	
	BRANCH MANAGER	
	DESIGN DIRECTOR	

DEPARTMENT OF THE NAVY
NAVAL FACILITIES ENGINEERING COMMAND
ATLANTIC DIVISION
NAVAL STATION NORFOLK, VIRGINIA
NAVAL STATION NORFOLK, VIRGINIA

SMALL CRAFT BASIN

LIGHTING FIXTURE PLATES

CODE ID. NO. 80091 SIZE D
SCALE: NONE
EFD NO.
STA. PROJ. NO. P–094
SPEC. NO. 05–03–3066
CONSTR. CONTR. NO.
N62470–03–B–3066
NAVFAC DRAWING NO.
4501355
SHEET 118 OF 123

E–502

DRAWFORM REVISION MAY 2000

FILENAME: 0960E–502.DWG, UPDATED ON 09/24/03 AT 10:26, XREFS: 0960PROJ–INFO

PANELBOARD 1A SCHEDULE

400 A. MCB, 480Y/277 V., 3 PHASE, 4 WIRE, 14 KAIC MINIMUM, SURFACE MOUNT

LOAD SERVED	LOAD (AMPS) A	LOAD (AMPS) B	LOAD (AMPS) C	BKR. TRIP	WIRE SIZE	CKT. NO.	PHASE A B C	CKT. NO.	WIRE SIZE	BKR. TRIP	LOAD (AMPS) A	LOAD (AMPS) B	LOAD (AMPS) C	LOAD SERVED
PIER A	180			150	1	1		2	1	150	180			PIER C
		180										180		
			180										180	
PIER B	180			150	1	7		8	1	150	180			PIER D
		180										180		EAST
			180										180	
SANITARY PUMP	3.4			15	12	13		14	1	150	180			PIER D
		3.4										180		WEST
			3.4										180	
SPACE	*			150		19		20		150	*			SPARE
		*										*		
			*										*	
AREA LIGHTING	2.5			20	12	25		26	10	20	0.5			FUELING PIER LIGHT
		2.5						28		20		*		SPARE
SPACE			*	100		29		30		100			*	SPACE
SPACE	*			100		31		32		100	*			SPACE
SPACE		*		100		33		34		100		*		SPACE
SPACE			*	100		35		36		100			*	SPACE
TOTAL	*	*	*								*	*	*	TOTAL

TOTAL CONNECTED AMPS A: * B: * C: *

PANELBOARD 2A SCHEDULE

400 A. MCB, 208Y/120 V., 3 PHASE, 4 WIRE, 14 KAIC MINIMUM, SURFACE MOUNT

LOAD SERVED	LOAD (AMPS) A	LOAD (AMPS) B	LOAD (AMPS) C	BKR. TRIP	WIRE SIZE	CKT. NO.	PHASE A B C	CKT. NO.	WIRE SIZE	BKR. TRIP	LOAD (AMPS) A	LOAD (AMPS) B	LOAD (AMPS) C	LOAD SERVED
PIER A	300			150	1	1		2	1	150	300			PIER C
		300										300		
			300										300	
PIER B	300			150	1	7		8	1	150	300			PIER D
		300										300		
			300										300	
SPARE	*			150		13		14		150	*			SPARE
		*										*		
			*										*	
SPACE	*			150		19		20		150	*			SPACE
		*										*		
			*										*	
PIER A	300			150	1	25		26	1	150	300			PIER C
PIER B		300		150	1	27		28	1	150		300		PIER D
DIESEL FUEL PUMP			14	25	10	29		30	10	30			16	OWWO PUMP
GAS FUEL PUMP	14			25	10	31		32		30	*			SPARE
SPACE		*		100		33		34		100		*		SPACE
SPACE			*	100		35		36		100			*	SPACE
TOTAL	*	*	*								*	*	*	TOTAL

TOTAL CONNECTED AMPS A: * B:1 * C: *

PANELBOARD 1B SCHEDULE

100 A. MCB, 480Y/277 V., 3 PHASE, 4 WIRE, 18 KAIC MINIMUM, SURFACE MOUNT

LOAD SERVED	LOAD (AMPS) A	LOAD (AMPS) B	LOAD (AMPS) C	BKR. TRIP	WIRE SIZE	CKT. NO.	PHASE A B C	CKT. NO.	WIRE SIZE	BKR. TRIP	LOAD (AMPS) A	LOAD (AMPS) B	LOAD (AMPS) C	LOAD SERVED
HOIST WEST	10										10			HOIST EAST
		10		20	12	1		2	12	20		10		
			10										10	
SPARE	*										*			SPARE
		*		20		7		8		20		*		
			*										*	
WEST LOW BAY LIGHTING	13			20	12	13		14	12	20	13			EAST LOW BAY LIGHTING
WEST PERIMETER LIGHTING		9		20	12	15		16	12	20		7		EAST PERIMETER LIGHTING
WEST INTERIOR LIGHTING			5	20	12	17		18	12	20			5	EAST INTERIOR LIGHTING
SPARE	*			20		19		20		20	*			SPARE
SPARE		*		20		21		22		20		*		SPARE
SPACE			*			23		24					*	SPACE
SPACE	*					25		26			*			SPACE
SPACE		*				27		28				*		SPACE
SPACE			*			29		30					*	SPACE
TOTAL	26	22	18								23	17	10	TOTAL

TOTAL CONNECTED AMPS A:29 B:17 C:3

PANELBOARD 2B SCHEDULE

100 A. MCB, 208Y/120 V., 3 PHASE, 4 WIRE, 18 KAIC MINIMUM, SURFACE MOUNT

LOAD SERVED	LOAD (AMPS) A	LOAD (AMPS) B	LOAD (AMPS) C	BKR. TRIP	WIRE SIZE	CKT. NO.	PHASE A B C	CKT. NO.	WIRE SIZE	BKR. TRIP	LOAD (AMPS) A	LOAD (AMPS) B	LOAD (AMPS) C	LOAD SERVED
SPARE	*										*			SPARE
		*		20		1		2		20		*		
			*										*	
SPARE	*										*			SPARE
		*		20		7		8		20		*		
			*										*	
SPARE				20		13		14		20				SPARE
WEST WALL RECEPTACLES		4.5		20	12	15		16	12	20		6		EAST WALL RECEPTACLES
HEAT TAPE			2	20		17		18	8	50			30	SPRINKLER HOT BOX
WEST ROLL-UP DDOR	10			20	12	19		20	12	20	10			EAST ROLL-UP DOOR
SPARE		*		20		21		22		20		*		SPARE
SPACE			*			23		24					*	SPACE
SPACE	*					25		26			*			SPACE
SPACE		*				27		28				*		SPACE
SPACE			*			29		30					*	SPACE
TOTAL	6	30	2								10	4.5	6	TOTAL

TOTAL CONNECTED AMPS A:9 B:34.5 C:6

APPR	DATE	DESCRIPTION	STAL

DESIGNED & ENGINEERED BY:
LANTDIV
NAVAL FACILITIES ENGINEERING COMMAND

SEAL

APPROVED

ACTIVITY – SATISFACTORY TO

DATE

APPROVED
J P Bowen
FOR EFD FOR COMMANDER NAVFAC
10/02/03

DATE

A/E EFD
DESIGN DAE
DRAWN DAE
REVIEW HTO
QC
CHIEF ARCH./ ENGR.
PROJECT MANAGER KB
FIRE PROTECTION
BRANCH MANAGER
DESIGN DIRECTOR

DEPARTMENT OF THE NAVY
NAVAL FACILITIES ENGINEERING COMMAND
ATLANTIC DIVISION
NORFOLK, VIRGINIA
NAVAL STATION
NAVAL STATION NORFOLK, VIRGINIA
SMALL CRAFT BASIN
PANELBOARD SCHEDULES

CODE ID. NO. 80091 SIZE D
SCALE: NONE
EFD NO.
STA. PROJ. NO. P-094
SPEC. NO. 05-03-3066
CONSTR. CONTR. NO.
N62470-03-B-3066
NAVFAC DRAWING NO.
4501356
SHEET 119 OF 123
E-503

DRAWFORM REVISION MAY 2000

FILENAME: 0960E-503.DWG, UPDATED ON 09/24/03 AT 15:31, XREFS: 0960PROJ-INFO

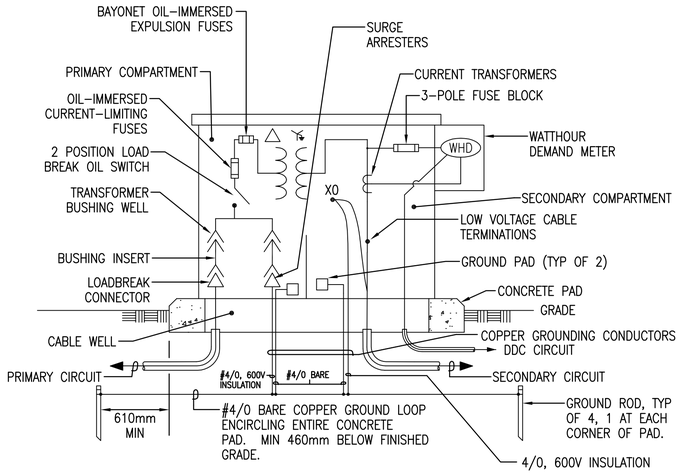

PAD-MOUNTED TRANSFORMER DETAIL - PMT 2

NOT TO SCALE

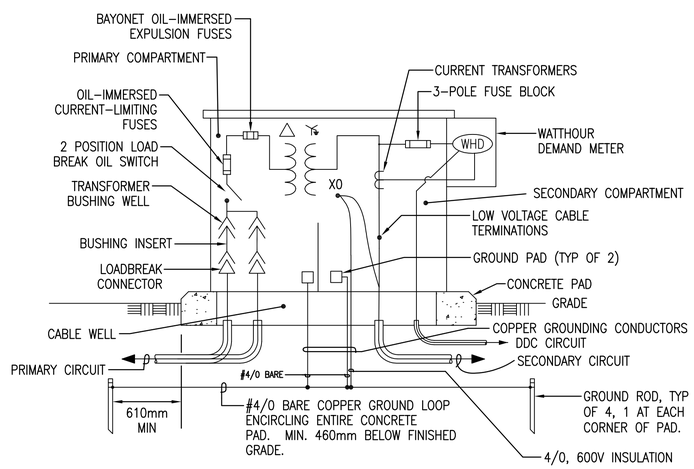

PAD-MOUNTED TRANSFORMER DETAIL - PMT 1

NOT TO SCALE

SYM.	DESCRIPTION	DATE	APPR

DESIGNED & ENGINEERED BY:
LANTDIV
NAVAL FACILITIES ENGINEERING COMMAND

SEAL

APPROVED

ACTIVITY - SATISFACTORY TO

DATE

APPROVED
J P Bowen
FOR EFD FOR COMMANDER NAVFAC
10/02/03

DATE

A/E		EFD
	DESIGN	DAE
	DRAWN	DAE
	REVIEW	HTO
	QC	
	CHIEF ARCH./ ENGR.	
	PROJECT MANAGER	KB
	FIRE PROTECTION	
	BRANCH MANAGER	
	DESIGN DIRECTOR	

DEPARTMENT OF THE NAVY
NAVAL FACILITIES ENGINEERING COMMAND
ATLANTIC DIVISION
NAVAL STATION
NAVAL STATION NORFOLK, VIRGINIA
NORFOLK, VIRGINIA

SMALL CRAFT BASIN

PAD MOUNT TRANSFORMER DETAILS

CODE ID. NO. 80091 | SIZE D

SCALE: NONE

EFD NO.

STA. PROJ. NO. P-094

SPEC. NO. 05-03-3066

CONSTR. CONTR. NO.
N62470-03-B-3066

NAVFAC DRAWING NO.
4501357

SHEET 120 OF 123

E-601

DRAWFORM REVISION MAY 2000

FILENAME: 0960E-601.DWG, UPDATED ON 09/24/03 AT 10:31, XREFS: 0960PROJ-INFO

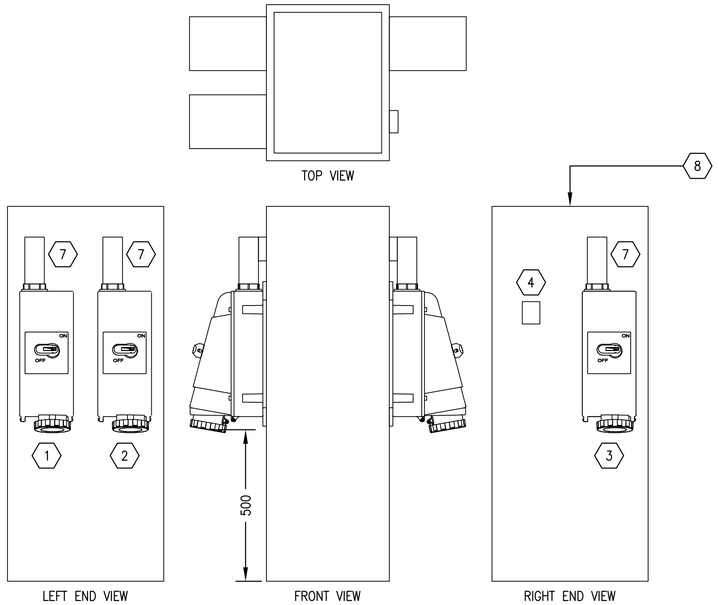

RECEPTACLE STATION ENCLOSURE DETAILS

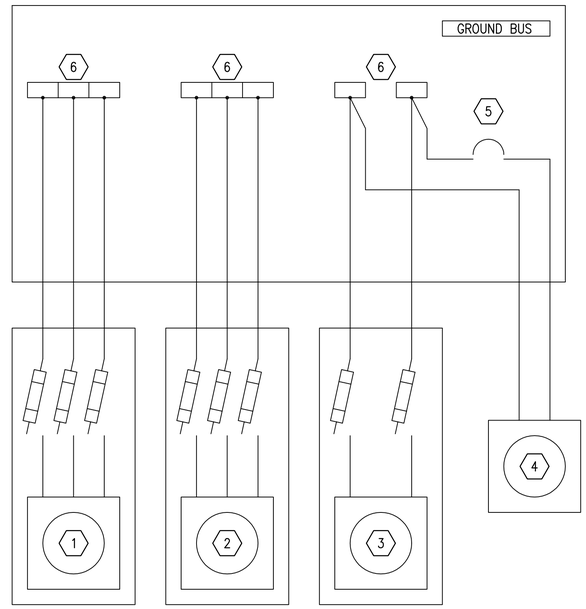

RECEPTACLE STATION WIRING DIAGRAM

RECEPTACLE STATION COMPONENTS

1. 60A, 480V, 3 POLE, 4 WIRE FUSED MECHANICAL INTERLOCK.
2. 60A, 240V, 3 POLE, 4 WIRE FUSED MECHANICAL INTERLOCK.
3. 60A, 240V, 2 POLE, 3 WIRE FUSED MECHANICAL INTERLOCK.
4. 20A, 125V, 2 POLE, 3 WIRE RECEPTACLE WITH INTERNAL GROUND FAULT PROTECTION.
5. 20A, 120V, 1 POLE, 18 KA RMS MOLDED CASE CIRCUIT BREAKER.
6. LUG ASSEMBLY, FOUR LUGS PER PHASE, CONDUCTOR RANGE 2/0–#14 AWG.
7. CONDUIT BODY, TYPE LB, RIGID NONMETALLIC.
8. 12 GUAGE, TYPE 304 STAINLESS STEEL, CLAMP COVER TYPE 4X ENCLOSURE.

SYM.	DESCRIPTION	DATE	APPR

DESIGNED & ENGINEERED BY:
LANTDIV
NAVAL FACILITIES ENGINEERING COMMAND

SEAL

APPROVED
ACTIVITY – SATISFACTORY TO
DATE
APPROVED
J P Bowen
FOR EFD FOR COMMANDER NAVFAC
10/02/03
DATE

A/E		EFD
	DESIGN	DAE
	DRAWN	DAE
	REVIEW	HTO
	QC	
	CHIEF ARCH./ ENGR.	
	PROJECT MANAGER	KB
	FIRE PROTECTION	
	BRANCH MANAGER	
	DESIGN DIRECTOR	

DEPARTMENT OF THE NAVY
ATLANTIC DIVISION
NAVAL FACILITIES ENGINEERING COMMAND
NORFOLK, VIRGINIA
NAVAL STATION
NAVAL STATION NORFOLK, VIRGINIA
SMALL CRAFT BASIN
RECEPTACLE STATION DETAILS

CODE ID. NO. 80091 | SIZE D
SCALE: NONE
EFD NO.
STA. PROJ. NO. P–094
SPEC. NO. 05–03–3066
CONSTR. CONTR. NO.
N62470–03–B–3066
NAVFAC DRAWING NO.
4501358
SHEET 121 OF 123
E–602

DRAWFORM REVISION MAY 2000

FILENAME: 0960E–602.DWG, UPDATED ON 09/24/03 AT 11:28, XREFS: 0960PROJ–INFO

NOTES

1. SEE "DUCT ENTRANCE DETAIL" AND "CABLE RACK DETAIL" THIS SHEET.
2. FOR MANHOLE GROUNDING, SEE "MANHOLE GROUNDING DETAIL" THIS SHEET.

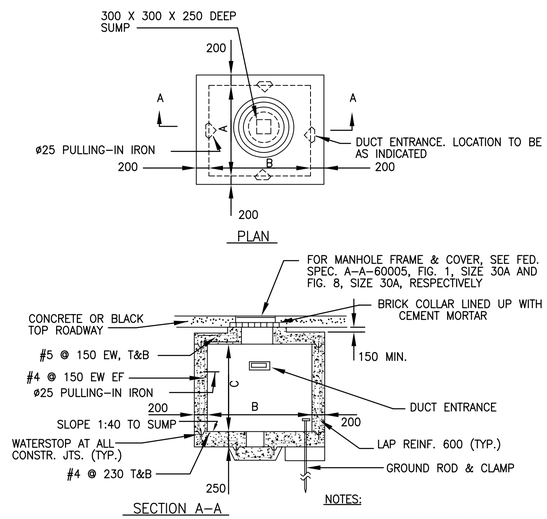

NOTES:

1. MANHOLE AND COVERS ARE DESIGNED FOR MAXIMUM WHEEL LOAD IN ACCORDANCE WITH AASHTO HS20-44.
2. FOR DETAILS OF CABLE RACKS, DUCT ENTRANCE AND PULLING-IN IRONS, SEE PLATE UG-7.
3. MINIMUM CONCRETE COMPRESSIVE STRENGTH SHALL BE 21 MPa.

MANHOLE DIMENSIONS			
TYPE	A	B	C (AT HIGH PT.)
3	1800	1800	2000
4	1800	2500	2000

STANDARD ELECTRICAL MANHOLE (TRAFFIC)
TYPES 3 & 4

SKETCH DATE JUNE 2002 | STYLE UG-2

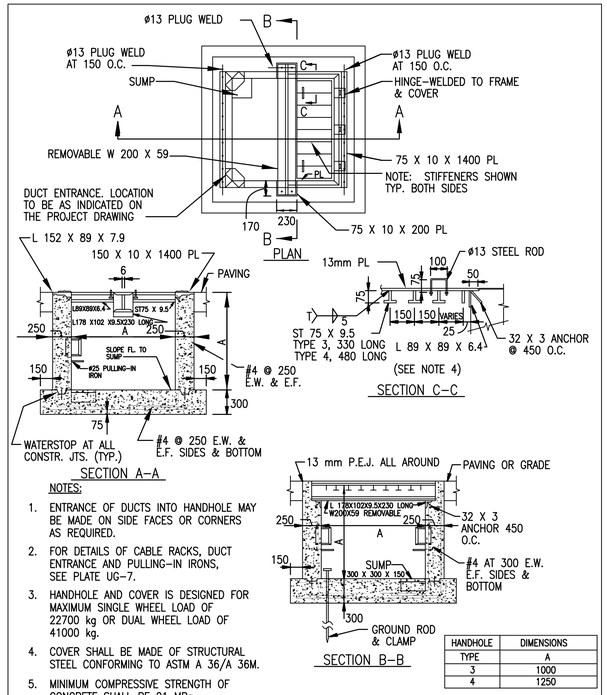

NOTES:

1. ENTRANCE OF DUCTS INTO HANDHOLE MAY BE MADE ON SIDE FACES OR CORNERS AS REQUIRED.
2. FOR DETAILS OF CABLE RACKS, DUCT ENTRANCE AND PULLING-IN IRONS, SEE PLATE UG-7.
3. HANDHOLE AND COVER IS DESIGNED FOR MAXIMUM SINGLE WHEEL LOAD OF 22700 kg OR DUAL WHEEL LOAD OF 41000 kg.
4. COVER SHALL BE MADE OF STRUCTURAL STEEL CONFORMING TO ASTM A 36/A 36M.
5. MINIMUM COMPRESSIVE STRENGTH OF CONCRETE SHALL BE 21 MPa.

HANDHOLE DIMENSIONS	
TYPE	A
3	1000
4	1250

STANDARD ELECTRICAL HANDHOLE (TRAFFIC/AIRFIELD)
TYPES 3 & 4

SKETCH DATE JUNE 2002 | STYLE UG-5

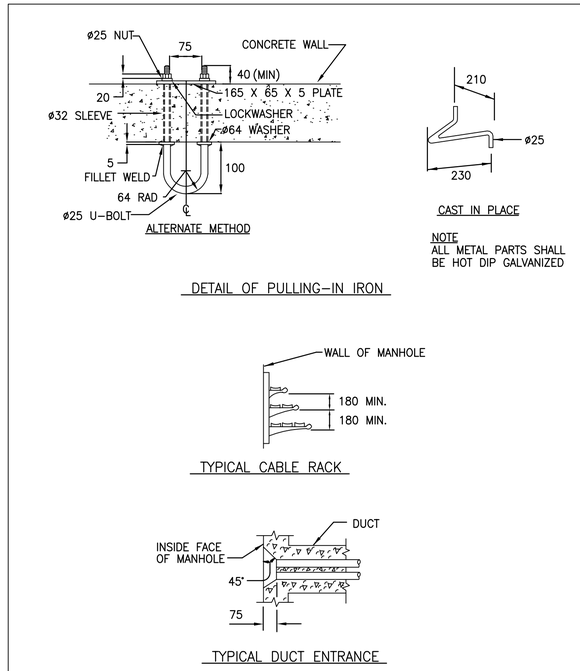

DETAILS
(PULLING-IN IRONS, CABLE RACK AND DUCT ENTRANCE)

SKETCH DATE JUNE 2002 | STYLE UG-7

			APPR
			DATE
			DESCRIPTION
			STM.

DESIGNED & ENGINEERED BY:
LANTDIV
NAVAL FACILITIES ENGINEERING COMMAND

SEAL

APPROVED

ACTIVITY – SATISFACTORY TO

DATE

APPROVED
J P Bowen
FOR EFD FOR COMMANDER NAVFAC
10/02/03

DATE

A/E	EFD
DESIGN	DAE
DRAWN	DAE
REVIEW	HTO
QC	
CHIEF ARCH./ ENGR.	
PROJECT MANAGER	KB
FIRE PROTECTION	
BRANCH MANAGER	
DESIGN DIRECTOR	

DEPARTMENT OF THE NAVY
NAVAL FACILITIES ENGINEERING COMMAND
ATLANTIC DIVISION
NORFOLK, VIRGINIA
NAVAL STATION
NAVAL STATION
NORFOLK, VIRGINIA
SMALL CRAFT BASIN
MANHOLE DETAILS

CODE ID. NO. 80091 | SIZE D
SCALE: NONE
EFD NO.
STA. PROJ. NO. P-094
SPEC. NO. 05-03-3066
CONSTR. CONTR. NO.
N62470-03-B-3066
NAVFAC DRAWING NO.
4501359
SHEET 122 OF 123

E-701

DRAWFORM REVISION MAY 2000

FILENAME: 0960E-701.DWG, UPDATED ON 09/23/03 AT 16:02, XREFS: 0960PROJ-INFO

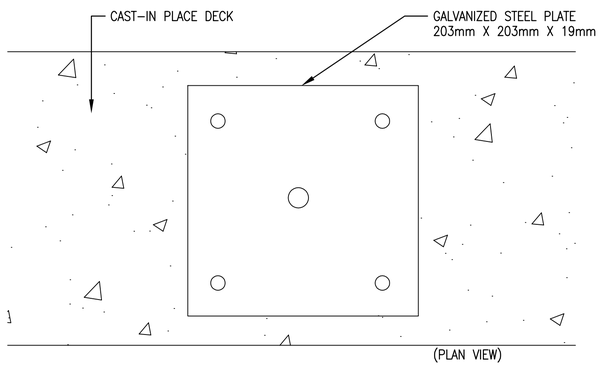

NAVIGATIONAL LIGHT MOUNTING DETAIL

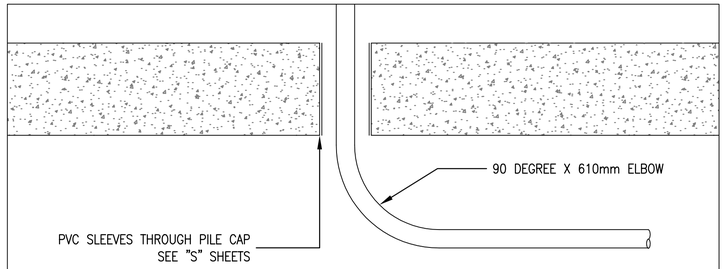

DECK SLAB CONDUIT TURN-UP DETAIL

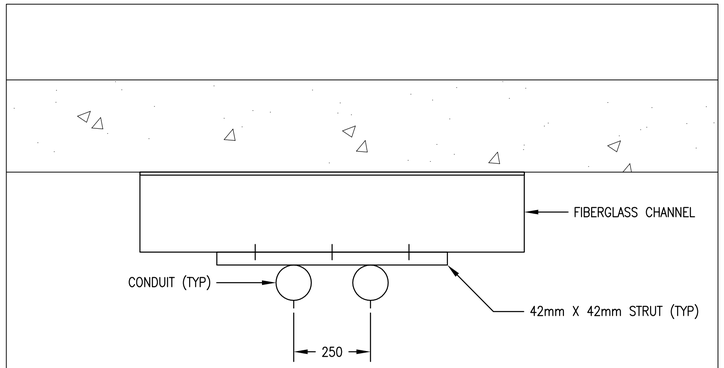

END VIEW CONDUIT SUPPORT DETAIL

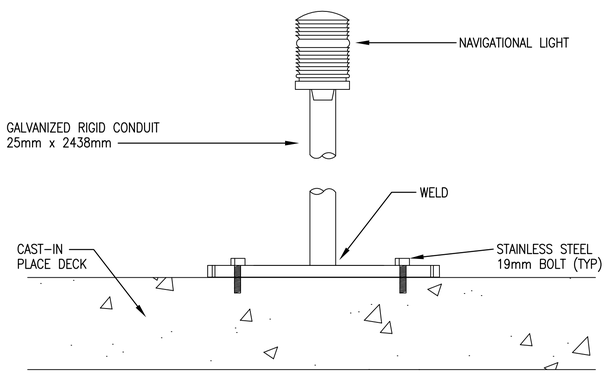

NAVIGATIONAL LIGHT MOUNTING DETAIL

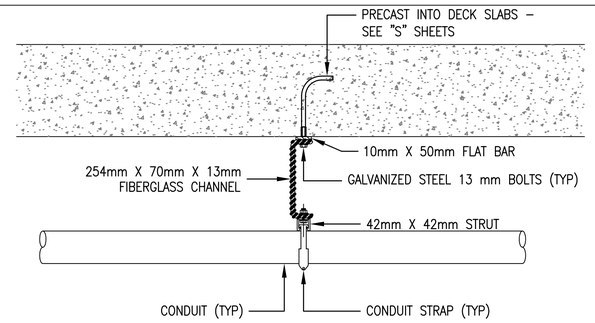

DETAIL "A" - DECK SLAB CONDUIT SUPPORT

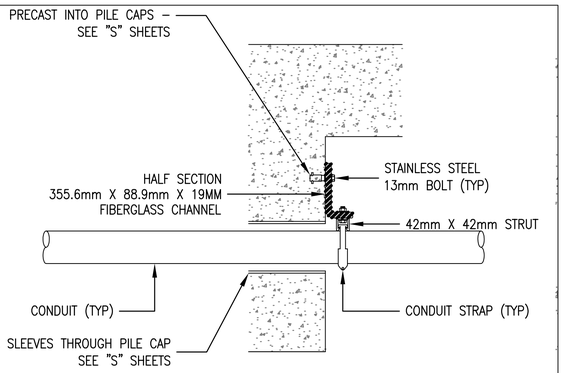

DETAIL "B" - PILE CAP CONDUIT SUPPORT

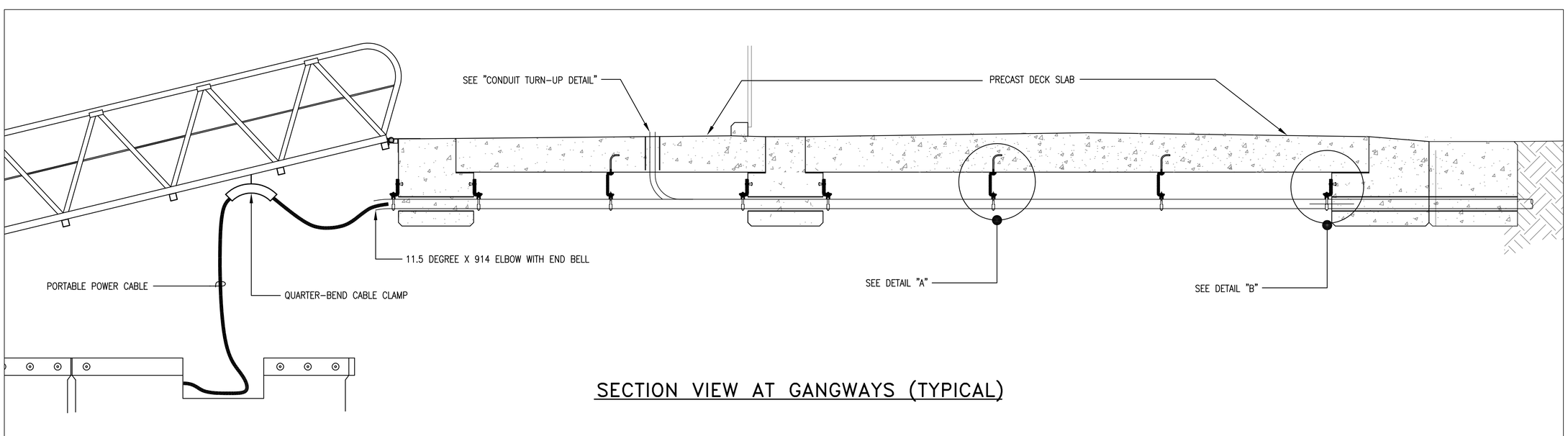

SECTION VIEW AT GANGWAYS (TYPICAL)

STM.	DESCRIPTION	DATE	APPR

DESIGNED & ENGINEERED BY:
LANTDIV
NAVAL FACILITIES ENGINEERING COMMAND

SEAL

APPROVED

ACTIVITY - SATISFACTORY TO

DATE

APPROVED
J.P. Bowen
FOR EFD FOR COMMANDER NAVFAC
10/02/03

DATE

A/E	EFD
DESIGN	DAE
DRAWN	DAE
REVIEW	HTO
QC	
CHIEF ARCH./ ENGR.	
PROJECT MANAGER	KB
FIRE PROTECTION	
BRANCH MANAGER	
DESIGN DIRECTOR	

DEPARTMENT OF THE NAVY
NAVAL STATION
NAVAL STATION
NORFOLK, VIRGINIA
NAVAL FACILITIES ENGINEERING COMMAND
ATLANTIC DIVISION
NORFOLK, VIRGINIA

SMALL CRAFT BASIN

CONDUIT ASSEMBLY DETAILS

CODE ID. NO. 80091 | SIZE D
SCALE: NONE
EFD NO.
STA. PROJ. NO. P-094
SPEC. NO. 05-03-3066
CONSTR. CONTR. NO.
N62470-03-B-3066
NAVFAC DRAWING NO.
4501360
SHEET 123 OF 123

E-702

DRAWFORM REVISION MAY 2000

FILENAME: 0960E-702.DWG, UPDATED ON 09/24/03 AT 11:31, XREFS: 0960PROJ-INFO