WORK ORDER NO. 1333825

HVAC and DDC Facility Optimization

At

NAVSTA Norfolk, Norfolk, VA

SUBMITTED BY:

CH2M HILL
2411 Dulles Corner Park, Suite 500
Herndon, VA 20171

Project Manager: Mark Pratt
Project Team: Brian Cooper
Perry Jones
Cassandra Johnson
Matt Ludwig

Volume 3 of 4

APPROVED BY:

For Commander, NAVFAC MIDLANT
Date: June 2, 2016
100 Percent RFP Submittal

AIRAGHI.MARK.JOSEPH.1046975711

Digitally signed by AIRAGHI.MARK.JOSEPH.1046975711
DN: c=US, o=U.S. Government, ou=DoD, ou=PKI, ou=USN, cn=AIRAGHI.MARK.JOSEPH.1046975711
Date: 2016.06.24 07:27:28 -04'00'

ATTACHMENT 5
MECHANICAL RECORD DRAWINGS

A-48 Record Drawings

MECHANICAL DEMOLITION NOTES

(1) REMOVE FAN COIL UNIT, CONVECTOR ENCLOSURE COVER AND PIPING BACK TO RISER.

(2) REMOVE BASEBOARD RADIATION AND PIPING BACK TO RISER.

(3) NOT USED

(4) REMOVE DUCTWORK AND GRILLE BACK TO EXHAUST SHAFT/EXHAUST RISER.

(5) REMOVE EXISTING PIPING RISER PRIOR TO ARCHITECTURAL WALL REPAIRS. (COORDINATE WITH GENERAL CONTRACTOR). WHERE PIPING RISER CHASE IS EXISTING TO REMAIN, PIPING RISERS MAY BE ABANDON IN PLACE.

(6) REMOVE EXISTING DUCTWORK. DISCONNECT EXISTING DIFFUSER/GRILLE AND SAVE FOR RELOCATION AS SHOWN ON NEW WORK PLAN.

(7) DISCONNECT AND EXTEND EXISTING DUCTWORK AS SHOWN ON NEW WORK PLAN.

(8) REMOVE EXISTING DUCTWORK AND CAP.

(9) NOT USED

(10) REMOVE EXISTING PIPING NOTED IN CRAWL SPACE.

MECHANICAL NEW WORK NOTES

[1] PROVIDE NEW DUCTWORK AS SHOWN. CONNECT TO RELOCATED DIFFUSER/GRILLE DUCT AS APPLICABLE, BALANCE FOR CFM NOTED.

[2] RELOCATE EXISTING DIFFUSER. EXTEND FLEX DUCT AS REQUIRED. BALANCE FOR CFM NOTED.

[3] PROVIDE NEW FAN COIL UNIT AND DUCTWORK AS SHOWN.

[4] BALANCE DAMPER FOR NEW AIRFLOW NOTED.

[5] PROVIDE NEW RA OPENING IN FCU PLENUM FOR RA FILTER GRILLE CONNECTION. BALANCE FOR CFM NOTED.

MECHANICAL GENERAL NOTES

1. ALL DEMOLITION WORK SHOWN (OUTSIDE OF THE MECHANICAL ROOM AND CRAWLSPACE) WILL BE PERFORMED UNDER THIS CONTRACT. DEMOLITION WORK SHOWN ON THE FLOORS WILL BE INCLUDED AS THE INDIVIDUAL WINGS ARE REMODELED.

2. NEW WORK INSTALLATION WILL BE ACCOMPLISHED IN PHASES AS OUTLINED IN THE ARCHITECTURAL DRAWINGS AND SPECIFICATIONS: WORK WILL BE PERFORMED WHILE THE BUILDING REMAINS OCCUPIED, AND WILL BE LIMITED TO ONE FLOOR AT A TIME. CONTRACTOR WILL COORDINATE WITH THE USING FACILITY TO LIMIT AFFECTED WORK AREA AND IMPACT OF REMAINING BUILDING OPERATION DURING CONSTRUCTION. WORK WILL BE PHASED AS FOLLOWS:

   PHASE 1
   a. REMOVAL OF ORIGINAL FLOOR MOUNTED FCU SYSTEM ON THE THIRD FLOOR AND MODIFICATION OF CEILING FCU SYSTEM PER FLOOR PLAN REVISIONS.
   b. REMOVAL OF ORIGINAL CRAWL SPACE PIPING.

   PHASE 2
   a. REMOVAL OF ORIGINAL FLOOR MOUNTED FCU SYSTEM ON THE FIRST FLOOR AND MODIFICATION OF CEILING FCU SYSTEM PER FLOOR PLAN REVISIONS.

   PHASE 3
   a. REMOVAL OF ORIGINAL FLOOR MOUNTED FCU SYSTEM ON THE SECOND FLOOR AND MODIFICATION OF CEILING FCU SYSTEM PER FLOOR PLAN REVISIONS.

3. ALL SUPPLY AND RETURN DUCTWORK AT FAN COIL UNITS SHALL BE INTERNALLY LINED. DIMENSIONS SHOWN ARE NET INSIDE DIMENSIONS: DUCT SIZES SHALL BE INCREASED TO PROVIDE CLEAR INSIDE DIMENSIONS NOTED.

4. WORK INCLUDES REMOVAL OF EXISTING CEILINGS AND INSTALLATION OF NEW CEILINGS AND GRID. CONTRACTOR SHALL PROVIDE TEMPORARY SUPPORT OF DIFFUSERS AND GRILLES, AND SHALL COORDINATE INSTALLATION WITH NEW GRID LAYOUT. ALL RELOCATED AIR TERMINALS AND ALL NEW WORK SHALL BE TESTED/ADJUSTED AND BALANCED PER THE SPECIFICATIONS.

LEGEND

——·——	DOMESTIC COLD WATER (C.W.)
—HS—	HEATING WATER SUPPLY
--HR--	HEATING WATER RETURN
—CS—	CHILLED WATER SUPPLY
---CR---	CHILLED WATER RETURN
—CHWS—	CHILLED/HOT WATER SUPPLY
--CHWR--	CHILLED/HOT WATER RETURN
—CD—	CONDENSATE DRAIN
———	EXISTING TO REMAIN
-X-X-X-	EXISTING TO BE REMOVED
———	NEW WORK
	GATE VALVE
	CHECK VALVE
	COMBINATION BALANCING AND SHUTOFF VALVE W/PRESSURE TAPS
	ELECTRIC 3-WAY CONTROL VALVE
	BALL VALVE
	STRAINER W/BLOWDOWN VALVE
	UNION
	DIRECTION OF PITCH
	DIRECTION OF FLOW
	PIPE TURN UP
	PIPE TURN DOWN
	CONCENTRIC REDUCER
	ECCENTRIC REDUCER
	FLEXIBLE PIPE CONNECTION
	PIPE ANCHOR (PA)
	PIPE SLEEVE
	MANUAL AIR VENT (MV)
H—P	PRESSURE TAP NEEDLE VALVE
	PRESSURE GAUGE W/PIGTAILS AND SHUTOFF VALVE
H—(T)	THERMOMETER
H—T	THERMOWELL
(T)	THERMOSTAT
(H)	HUMIDISTAT
(S)	SENSOR
	BALANCING DAMPER (MULTI-LEAF)
	ELBOW W/TURNING VANES
R	RISE IN DUCT
	FLEXIBLE CONNECTION
	FLEXIBLE DUCT

(A)100	GRILLE REGISTER OR DIFFUSER (CFM AS NOTED)
(1)	FAN COIL UNIT
ϕ	ROUND DUCT
	POINT OF CONNECTION - NEW TO EXISTING
	LIMIT OF DEMOLITION
(1)	DEMOLITION WORK NOTE
[1]	NEW WORK NOTE
AFF	ABOVE FINISHED FLOOR
AHU	AIR HANDLING UNIT
APD	AIR PRESSURE DROP
AP	ACCESS PANEL
BD	BALANCING DAMPER (MULTI-LEAF)
CFM	CUBIC FEET PER MINUTE
DN	DOWN
DB	DRY BULB
ESP	EXTERNAL STATIC PRESSURE
EDB	ENTERING DRY BULB
ETR	EXISTING TO REMAIN
EWT	ENTERING WATER TEMPERATURE
EWB	ENTERING WET BULB
FCU	FAN COIL UNIT
FC	FLEXIBLE CONNECTION
GA	GAUGE
HP	HORSEPOWER
INV	INVERT
LWT	LEAVING WATER TEMPERATURE
LDB	LEAVING DRY BULB
NIC	NOT IN CONTRACT
OA	OUTSIDE AIR
WPD	WATER PRESSURE DROP
FTWC	FEET WATER COLUMN
WPD	WATER PRESSURE DROP

SECTION NUMBER OR DETAIL LETTER
SECTION OR DETAIL SHOWN ON THIS SHEET
SECTION OR DETAIL CUT ON THIS SHEET

VANSANT & GUSLER, INC.
CONSULTING ENGINEERS
NORFOLK, VIRGINIA

REVISIONS

SYM	DESCRIPTION	DATE	APPROVED

JOB ORDER NO. 1325020
DES. MRK | DR. RED | CHK. FRA
E.I.C. G. W. CRABBE JR.
BR. MGR.
DIV. DIR
APPROVED: DATE: J.H.SALLEY,JR. 7-10-98
SATISFACTORY TO COMMANDER, NAVFAC

SUBMITTED BY:
FIRM MEMBER / PRINCIPAL
APPROVED: DATE: MS.S.I.HAWKINSON 6-18-98
SATISFACTORY TO ACTIVITY
APPROVED: DATE:
SATISFACTORY TO COMMANDER, NAVFAC

COMMONWEALTH OF VIRGINIA
7/29/98
No. 8772
PROFESSIONAL ENGINEER
SEAL

DEPT. OF THE NAVY
NAVY PUBLIC WORKS CENTER
NAGFAGENGCOM
NORFOLK, VIRGINIA
NAVAL STATION
NAVAL STATION
NORFOLK, VIRGINIA
RENOVATE OFFICE „BUILDING A-48 PART B"

MECHANICAL LEGEND AND NOTES

CODE ID. NO. 80091
DRAWING SIZE: A1
CONST. CONT. NO. N62470-96-B-7445
SPEC. 05-96-7445
NAVFAC DRAWING NO. 4,333,981
PWC DRAWING NO. 15,554AF
SHEET 33 OF 59
M-1

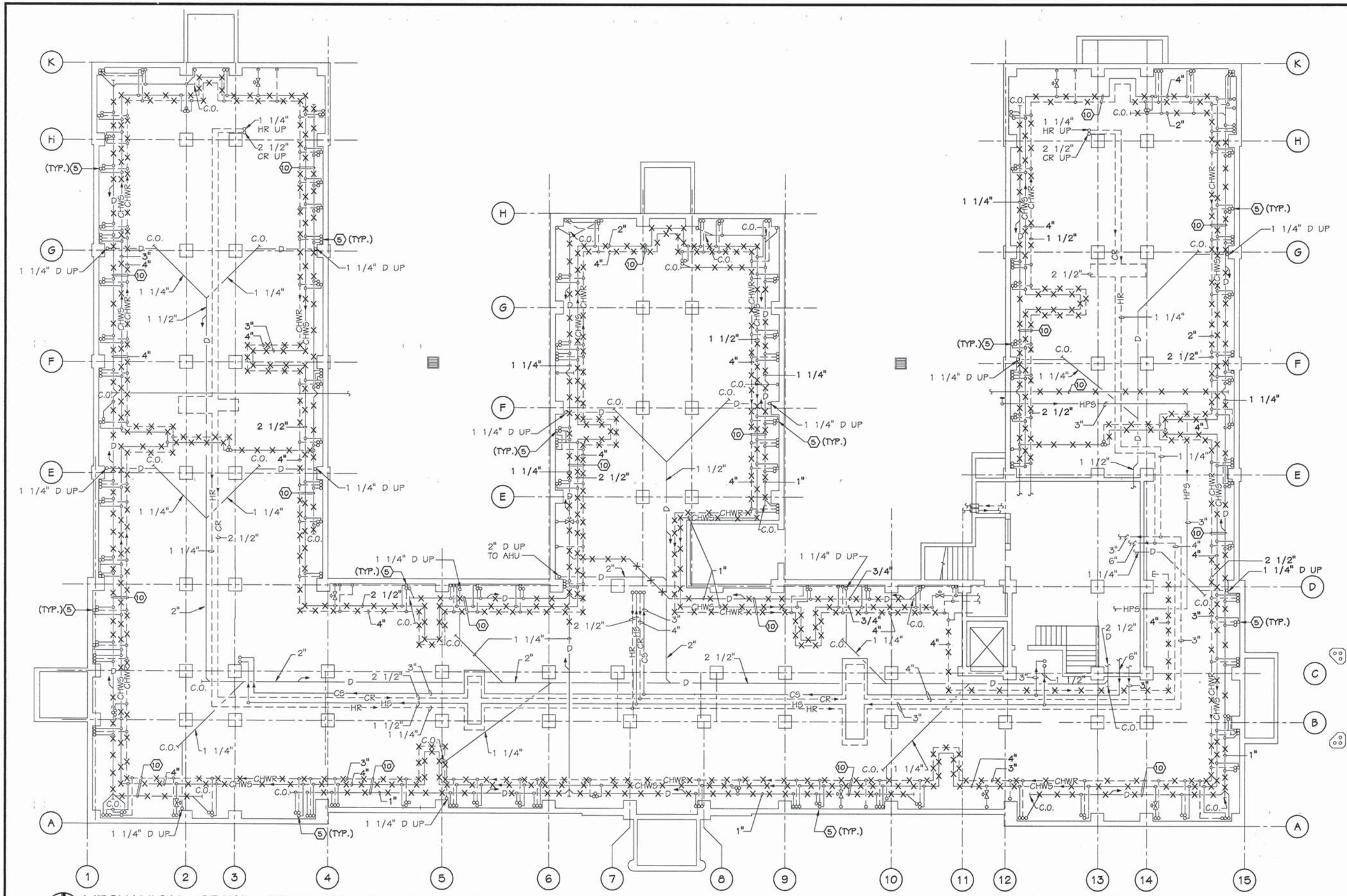

MECHANICAL CRAWL SPACE DEMOLITION PLAN
SCALE: 1/8"=1'-0"

GRAPHIC SCALE
1/8"=1'-0" 0 4' 8' 16' 24'

VANSANT & GUSLER, INC.
CONSULTING ENGINEERS
NORFOLK, VIRGINIA

SYM	DESCRIPTION	DATE	APPROVED
	REVISIONS		

JOB ORDER NO. 1325020
DES. MRK | DR. RED | CHK. FRA
E.I.C. G. W. CRABBE JR.
BR. MGR.
DIV. DIR
APPROVED: J.H.SALLEY,JR. 7-16-96 DATE:
FOR C.O. COMMANDER, NAVFAC

SUBMITTED BY:
FIRM MEMBER / PRINCIPAL
APPROVED: MS.S.L.HAWKINSON 6-18-96 DATE:
SATISFACTORY TO ACTIVITY
APPROVED: DATE:
SATISFACTORY TO COMNAVBASE

COMMONWEALTH OF VIRGINIA
7/29/96
FRANK R. ANDERSON
No. 8772
PROFESSIONAL ENGINEER
SEAL

DEPT. OF THE NAVY
NAVY PUBLIC WORKS CENTER
NAVAL STATION NORFOLK, VIRGINIA
NACFACENGCOM
NAVAL STATION NORFOLK, VIRGINIA
RENOVATE OFFICE BUILDING
A-48 PART "B"
MECHANICAL CRAWL SPACE DEMOLITION PLAN

CODE ID. NO. 80091
DRAWING SIZE: A1
CONST. CONT. NO. N62470-96-B-7445
SPEC. 05-96-7445
NAVFAC DRAWING NO. 4,333,982
PWC DRAWING NO. 15,554AG
SHEET 34 OF 59
M-2

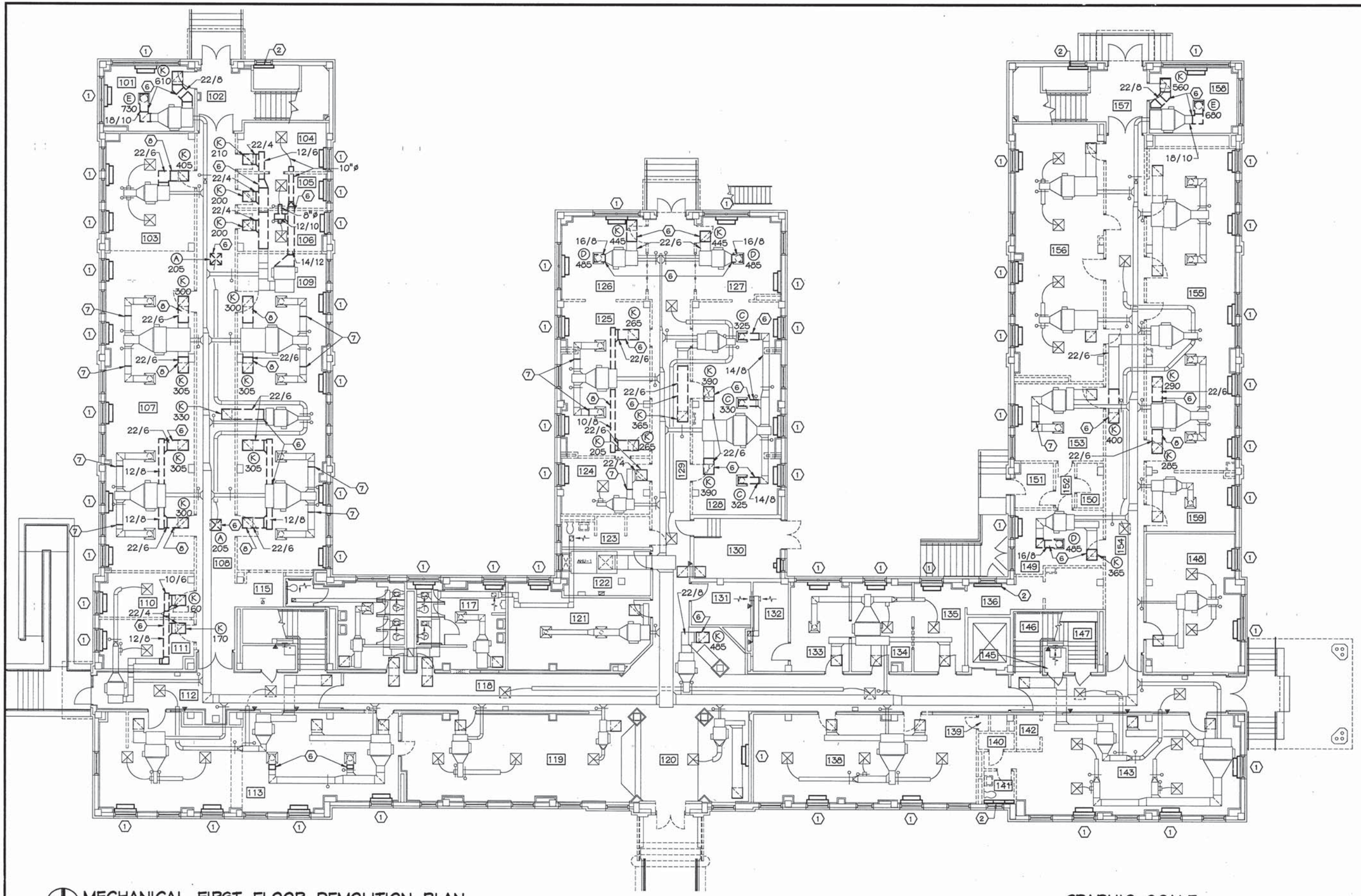

MECHANICAL FIRST FLOOR DEMOLITION PLAN

SCALE: 1/8"=1'-0"

FOR DEMOLITION WORK NOTES, SEE SHEET M-1

GRAPHIC SCALE

1/8"=1'-0" 0 4' 8' 16' 24'

VANSANT & GUSLER, INC.
CONSULTING ENGINEERS
NORFOLK, VIRGINIA

SYM	DESCRIPTION	DATE	APPROVED
	REVISIONS		

SUBMITTED BY:
FIRM MEMBER / PRINCIPAL
APPROVED: DATE:
MS.S.L.HAWKINSON 6-18-96
SATISFACTORY TO ACTIVITY
APPROVED: DATE:
J.H.SALLEY,JR. 7-16-96
SATISFACTORY TO COMNAVBASE
FOR C.O. COMMANDER, NAVFAC

JOB ORDER NO. 1325020
DES. MRK | DR. RED | CHK. FRA
E.I.C. G. W. CRABBE JR
BR. MGR.
DIV. DIR

COMMONWEALTH OF VIRGINIA
No. 8772
7/23/96
FRANK R. ANDERSON
PROFESSIONAL ENGINEER
SEAL

NACFACENGCOM
NORFOLK, VIRGINIA

DEPT. OF THE NAVY
NAVY PUBLIC WORKS CENTER
NAVAL STATION
NORFOLK, VIRGINIA
NAVAL STATION
RENOVATE OFFICE "B" BUILDING
A-48 PART

MECHANICAL FIRST FLOOR DEMOLITION PLAN

CODE ID. NO.	80091
DRAWING SIZE:	A1
CONST. CONT. NO.	N62470-96-B-7445
SPEC.	05-96-7445
NAVFAC DRAWING NO.	4,333,983
PWC DRAWING NO.	15,554AH
SHEET	35 OF 59

M-3

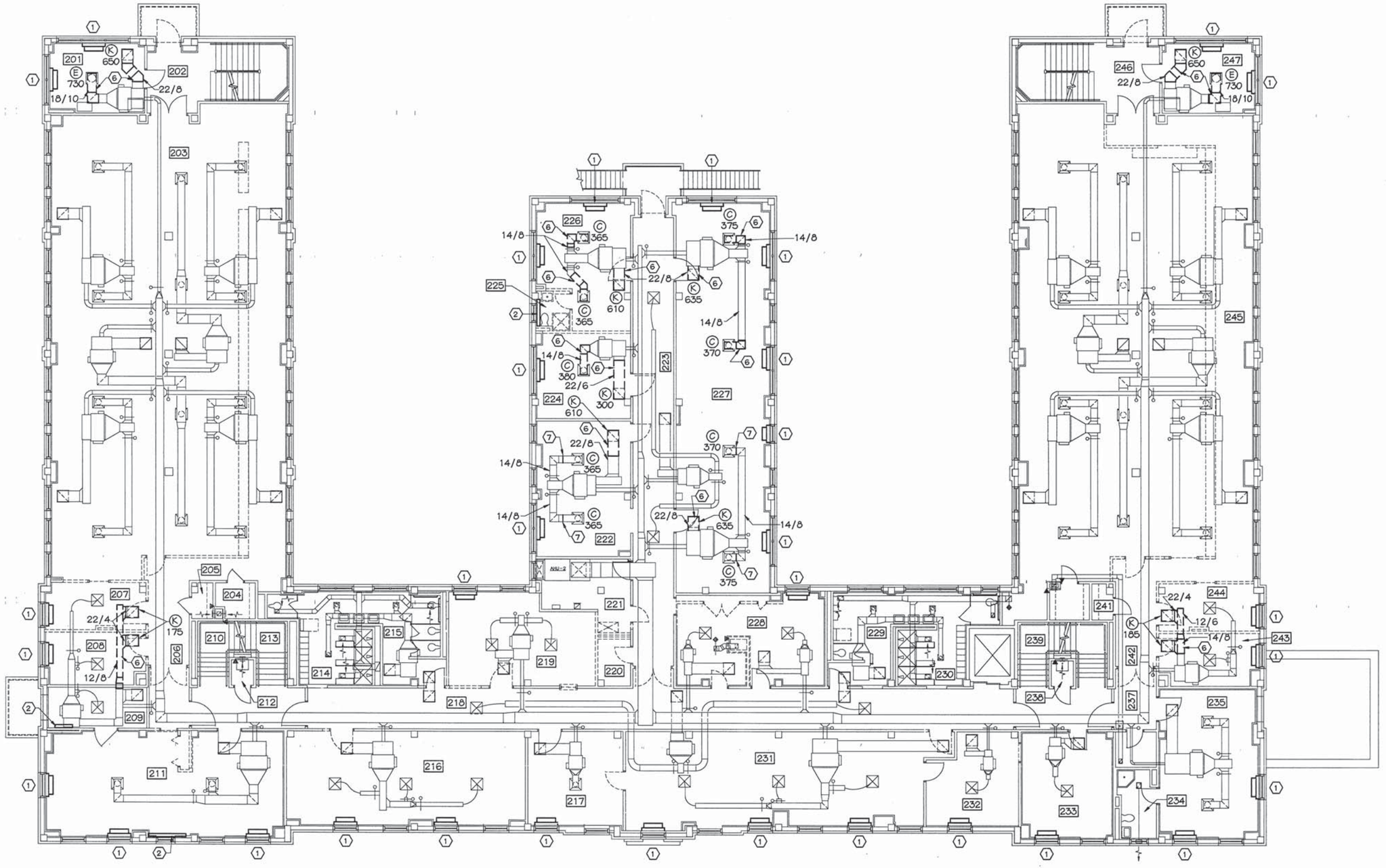

MECHANICAL SECOND FLOOR DEMOLITION PLAN

SCALE: 1/8"=1'-0"

FOR DEMOLITION WORK NOTES, SEE SHEET M-1

GRAPHIC SCALE

1/8"=1'-0" 0 4' 8' 16' 24'

VANSANT & GUSLER, INC.
CONSULTING ENGINEERS
NORFOLK, VIRGINIA

SUBMITTED BY:
FIRM MEMBER / PRINCIPAL
APPROVED: DATE:
MS.S.L.HAWKINSON 6-18-96
SATISFACTORY TO ACTIVITY
APPROVED: DATE:
SATISFACTORY TO COMNAVBASE

JOB ORDER NO. 1325020
DES. MRK DR. RED CHK. DLL
E.I.C. G. W. CRABBE JR
BR. MGR.
DIV. DIR.
APPROVED: DATE:
J.H.SALLEY,JR. 7-18-96
FOR C.O. COMMANDER, NAVFAC

REVISIONS

SYM	DESCRIPTION	DATE	APPROVED

COMMONWEALTH OF VIRGINIA
7/23/96
FRANK S. NICHOLS
No. 8772
REGISTERED PROFESSIONAL ENGINEER
SEAL

DEPT. OF THE NAVY
NAVY PUBLIC WORKS CENTER
NAVAL STATION NORFOLK, VIRGINIA
NAVAL STATION NORFOLK, VIRGINIA
RENOVATE OFFICE „B" BUILDING A-48 PART "B"
MECHANICAL SECOND FLOOR DEMOLITION PLAN
NACFACENGCOM

CODE ID. NO. 80091
DRAWING SIZE: A1
CONST. CONT. NO.
N62470-96-B-7445
SPEC. 05-96-7445
NAVFAC DRAWING NO.
4,333,984
PWC DRAWING NO.
15,554AI
SHEET 36 OF 59
M-4

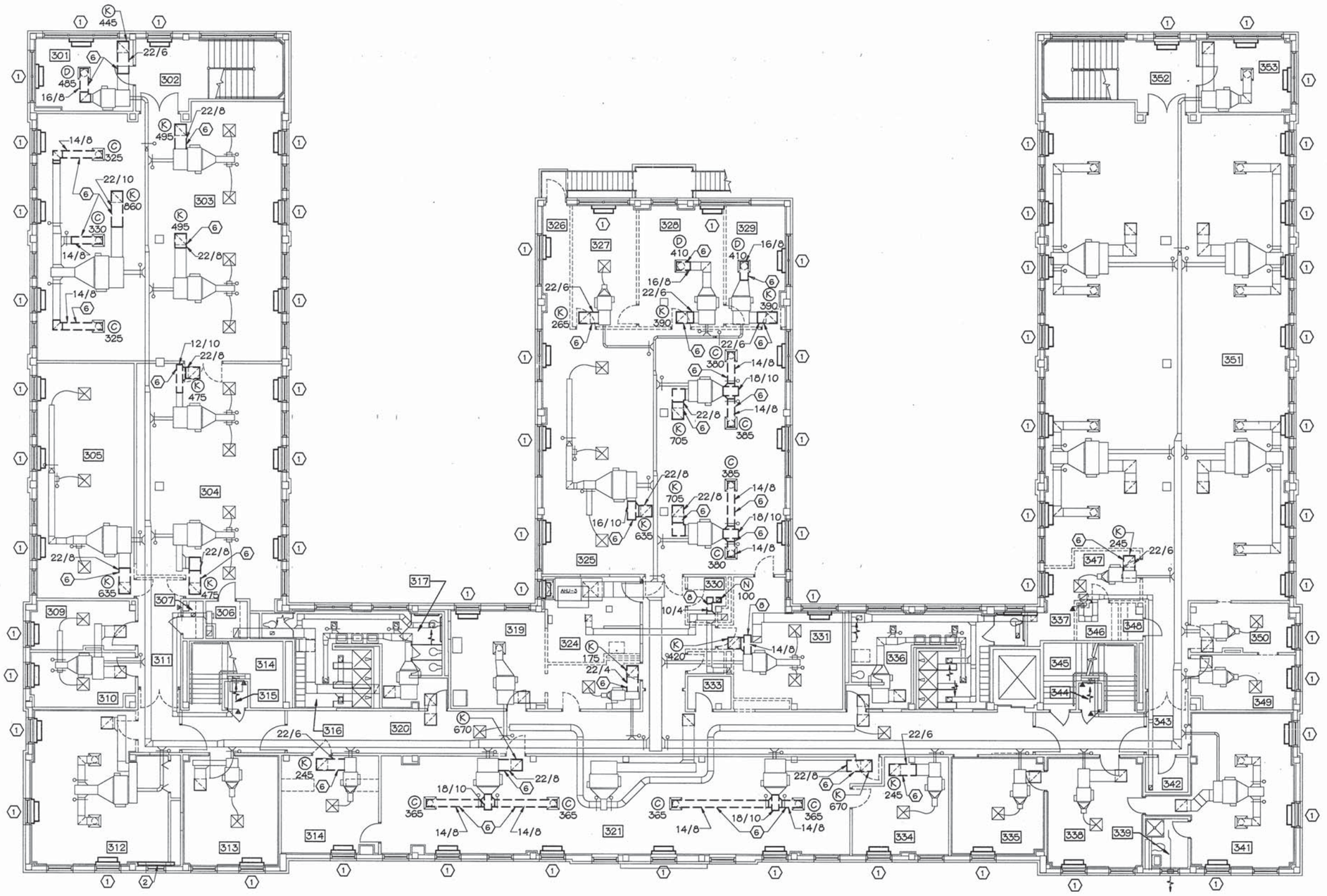

MECHANICAL THIRD FLOOR DEMOLITION PLAN

SCALE: 1/8"=1'-0"

FOR DEMOLITION WORK NOTES, SEE SHEET M-1

GRAPHIC SCALE

1/8"=1'-0" 0 4' 8' 16' 24'

VANSANT & GUSLER, INC.
CONSULTING ENGINEERS
NORFOLK, VIRGINIA

SYM	DESCRIPTION	DATE	APPROVED
	REVISIONS		

JOB ORDER NO. 1325020
DES. MRK DR. RED CHK. FRA
E.I.C. G. W. CRABBE
BR. MGR.
DIV. DIR
APPROVED: DATE:
J.H.SALLEY,JR. 7-16-96
FOR C.O. COMMANDER, NAVFAC

SUBMITTED BY:
FIRM MEMBER / PRINCIPAL
APPROVED: DATE:
MS.S.L.HAWKINSON 6-18-96
SATISFACTORY TO ACTIVITY
APPROVED: DATE:
SATISFACTORY TO COMNAVBASE

COMMONWEALTH OF VIRGINIA
7/29/96
FRANK R. MACARTHUR
No. 8772
PROFESSIONAL ENGINEER
SEAL

DEPT. OF THE NAVY
NAVY PUBLIC WORKS CENTER
NAVAL STATION NORFOLK, VIRGINIA
NACFACENGCOM
NAVAL STATION NORFOLK, VIRGINIA
RENOVATE OFFICE BUILDING
A-48 PART "B"
MECHANICAL THIRD FLOOR DEMOLITION PLAN

CODE ID. NO. 80091
DRAWING SIZE: A1
CONST. CONT. NO.
N62470-96-B-7445
SPEC. 05-95-7445
NAVFAC DRAWING NO.
4,333,985
PWC DRAWING NO.
15,554AJ
SHEET 37 OF 59
M-5

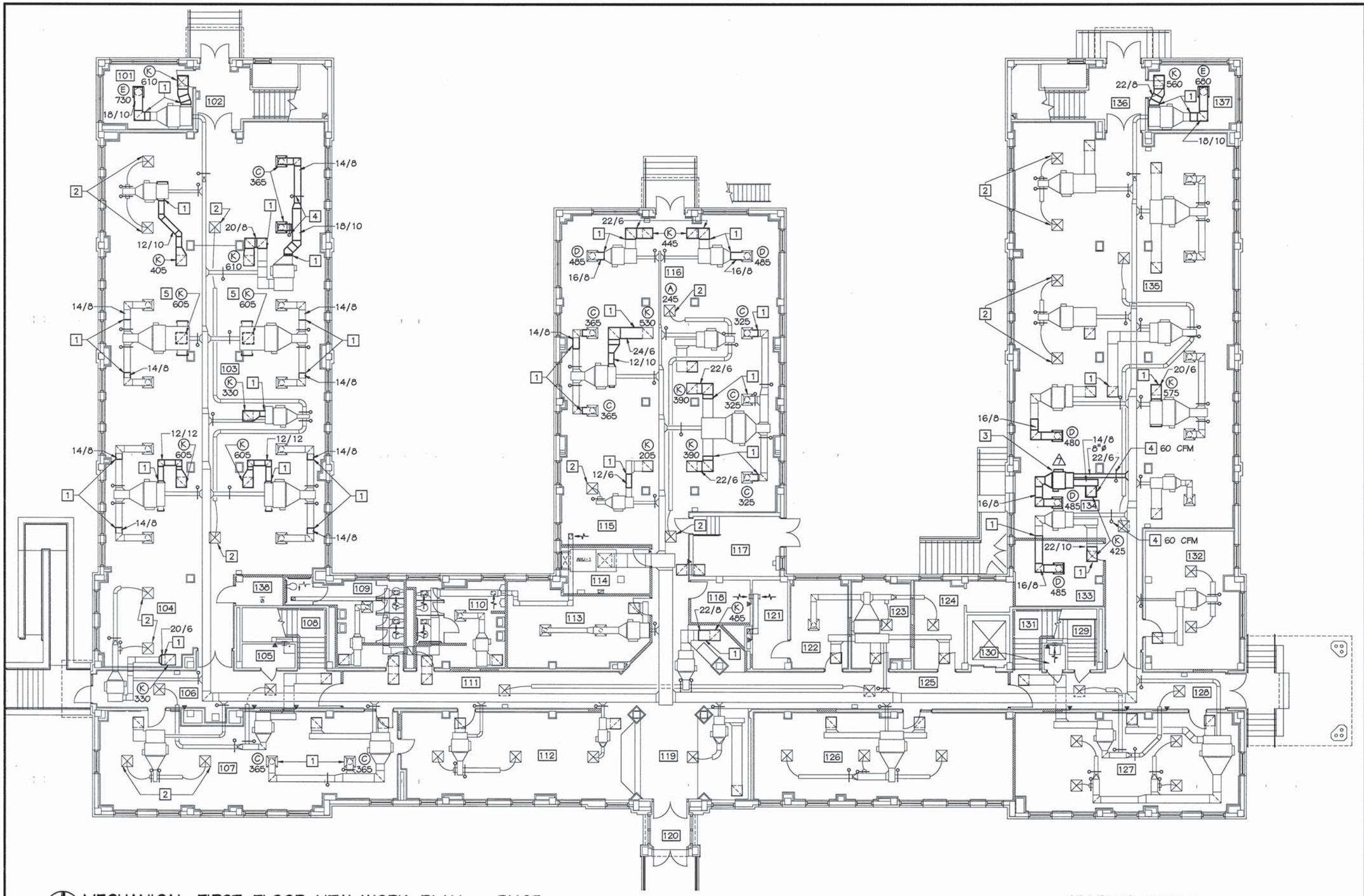

MECHANICAL FIRST FLOOR NEW WORK PLAN - DUCT

SCALE: 1/8"=1'-0"

FOR NEW WORK NOTES, SEE SHEET M-1

GRAPHIC SCALE

1/8"=1'-0" 0 4' 8' 16' 24'

VANSANT & GUSLER, INC.
CONSULTING ENGINEERS
NORFOLK, VIRGINIA

SUBMITTED BY:
FIRM MEMBER / PRINCIPAL
APPROVED:
DATE:
MS.S.L.HAWKINSON 6-18-96
SATISFACTORY TO ACTIVITY
APPROVED:
DATE:
J.H.SALLEY,JR. 7-16-96
SATISFACTORY TO COMNAVBASE

JOB ORDER NO. 1325020
DES. MRK | DR. RED | CHK. FRA
E.I.C.: G. W. CRABBE JR
BR. MGR.:
DIV. DIR.:
APPROVED:
DATE:

REVISIONS

SYM	DESCRIPTION	DATE	APPROVED

COMMONWEALTH OF VIRGINIA
FRANK E. HUDSON
No. 8772
PROFESSIONAL ENGINEER
7/23/96
SEAL

DEPT. OF THE NAVY
NAVAL STATION
NAVFACENGCOM
NORFOLK, VIRGINIA
NAVY PUBLIC WORKS CENTER
NAVAL STATION
NORFOLK, VIRGINIA
RENOVATE OFFICE "B" BUILDING A-48 PART "B"
MECH FIRST FLOOR NEW WORK PLAN-DUCT

CODE ID. NO. 80091
DRAWING SIZE: A1
CONST. CONT. NO. N62470-96-B-7445
SPEC. 05-96-7445
NAVFAC DRAWING NO. 4,333,986
PWC DRAWING NO. 15,554AK
SHEET 38 OF 59

M-6

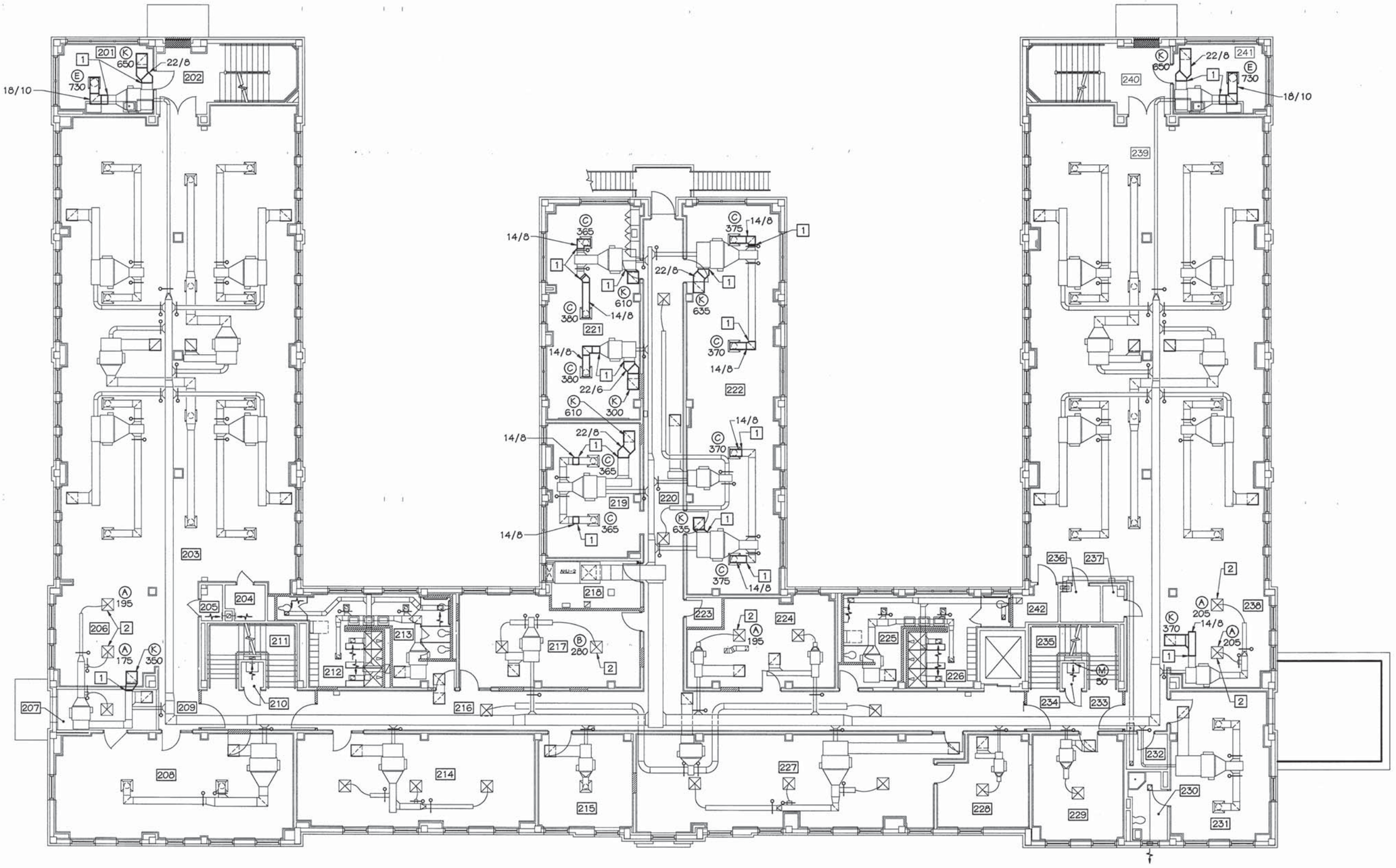

MECHANICAL SECOND FLOOR NEW WORK PLAN - DUCT

SCALE: 1/8"=1'-0"

FOR NEW WORK NOTES, SEE SHEET M-1

GRAPHIC SCALE

1/8"=1'-0" 0 4' 8' 16' 24'

VANSANT & GUSLER, INC.
CONSULTING ENGINEERS
NORFOLK, VIRGINIA

SYM	DESCRIPTION	DATE	APPROVED

REVISIONS

JOB ORDER NO. 1325020
DES. MRK | DR. RED | CHK. FRA
E.I.C. G. W. CRABBE JR
BR. MGR.
DIV. DIR
APPROVED: DATE:
J.H.SALLEY,JR. 7-18-96
FOR C.O. COMMANDER, NAVFAC

SUBMITTED BY:
FIRM MEMBER / PRINCIPAL
APPROVED: DATE:
MS.S.L.HAWKINSON 6-18-96
SATISFACTORY TO ACTIVITY
APPROVED: DATE:
SATISFACTORY TO COMNAVBASE

COMMONWEALTH OF VIRGINIA
7/29/96
FRANK R. MCARTOR
No. 8772
PROFESSIONAL ENGINEER
SEAL

DEPT. OF THE NAVY
NAVY PUBLIC WORKS CENTER
NAVAL STATION NORFOLK, VIRGINIA
NACFACENGCOM
NAVAL STATION NORFOLK, VIRGINIA
RENOVATE OFFICE BUILDING
A-48 PART "B"
MECH SECOND FLOOR NEW WORK PLAN-DUCT

CODE ID. NO. 80091
DRAWING SIZE: A1
CONST. CONT. NO.
N62470-96-B-7445
SPEC. 05-96-7445
NAVFAC DRAWING NO.
4,333,987
PWC DRAWING NO.
15,554AL
SHEET 39 OF 59
M-7

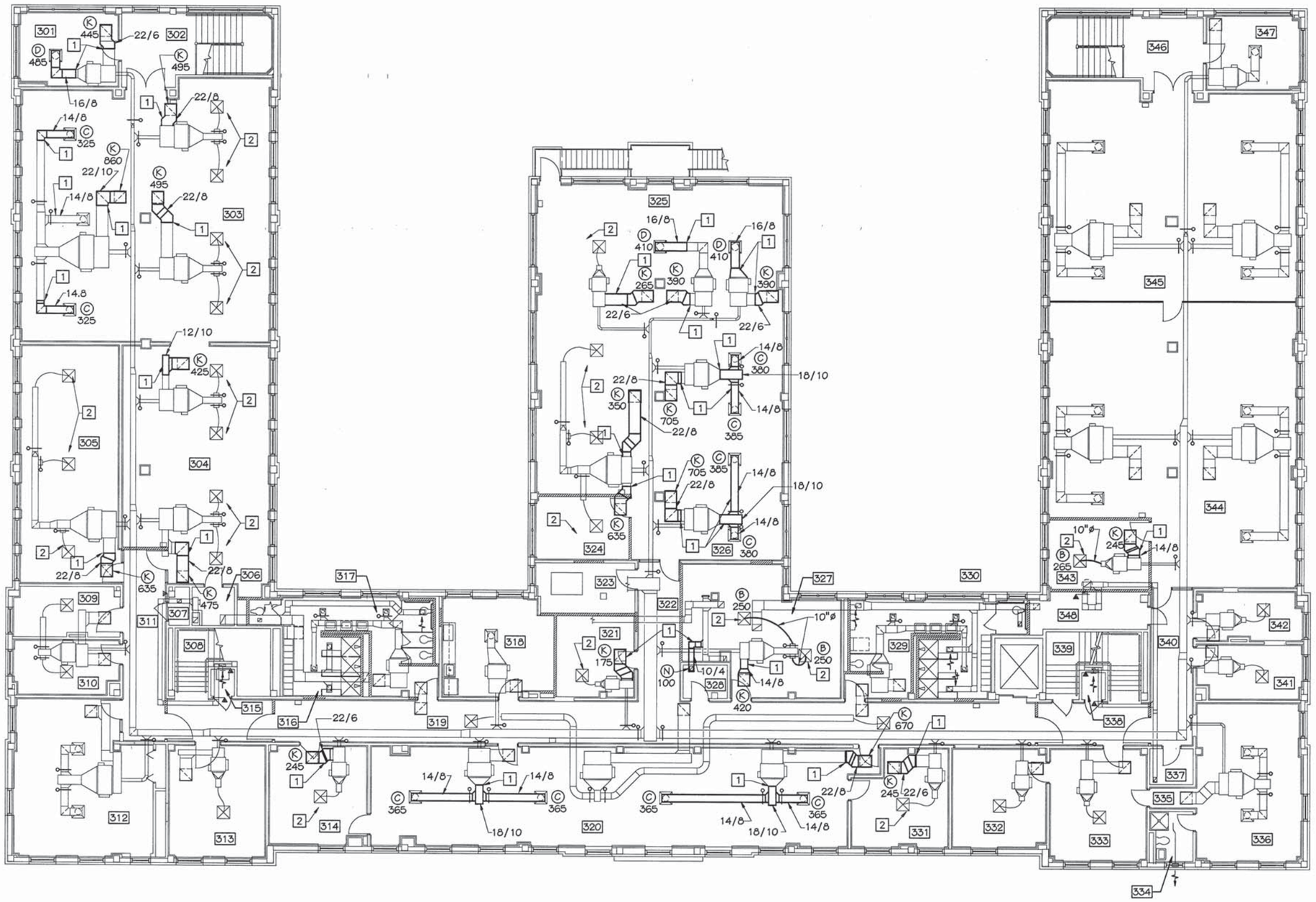

MECHANICAL THIRD FLOOR NEW WORK PLAN - DUCT

SCALE: 1/8"=1'-0"

FOR NEW WORK NOTES, SEE SHEET M-1

GRAPHIC SCALE

1/8"=1'-0" 0 4' 8' 16' 24'

VANSANT & GUSLER, INC.
CONSULTING ENGINEERS
NORFOLK, VIRGINIA

REVISIONS			
SYM	DESCRIPTION	DATE	APPROVED

JOB ORDER NO. 1325020
DES. MRK | DR. LEW3 | CHK. FRA
E.I.C. G. W. CRABBE JR
BR. MGR.
DIV. DIR.
APPROVED: DATE:
J.H.SALLEY,JR. 7-19-96
FOR C.O. COMMANDER, NAVFAC

SUBMITTED BY:
FIRM MEMBER / PRINCIPAL
APPROVED: DATE:
M.S.S.L.HAWKINSON 6-18-96
SATISFACTORY TO ACTIVITY
APPROVED: DATE:
SATISFACTORY TO COMNAVBASE

COMMONWEALTH OF VIRGINIA 8772 7/29/96 FRANK R. JOHNSON PROFESSIONAL ENGINEER SEAL

DEPT. OF THE NAVY
NAVAL STATION
NAVAL PUBLIC WORKS CENTER
NAVFACENGCOM
NORFOLK, VIRGINIA
NAVAL STATION
NORFOLK, VIRGINIA
RENOVATE OFFICE BUILDING A-48 PART "B"
MECH THIRD FLOOR NEW WORK PLAN-DUCT

CODE ID. NO.	80091
DRAWING SIZE:	A1
CONST. CONT. NO.	N62470-96-B-7445
SPEC.	05-96-7445
NAVFAC DRAWING NO.	4,333,988
PWC DRAWING NO.	15,554AM
SHEET	40 OF 59

M-8

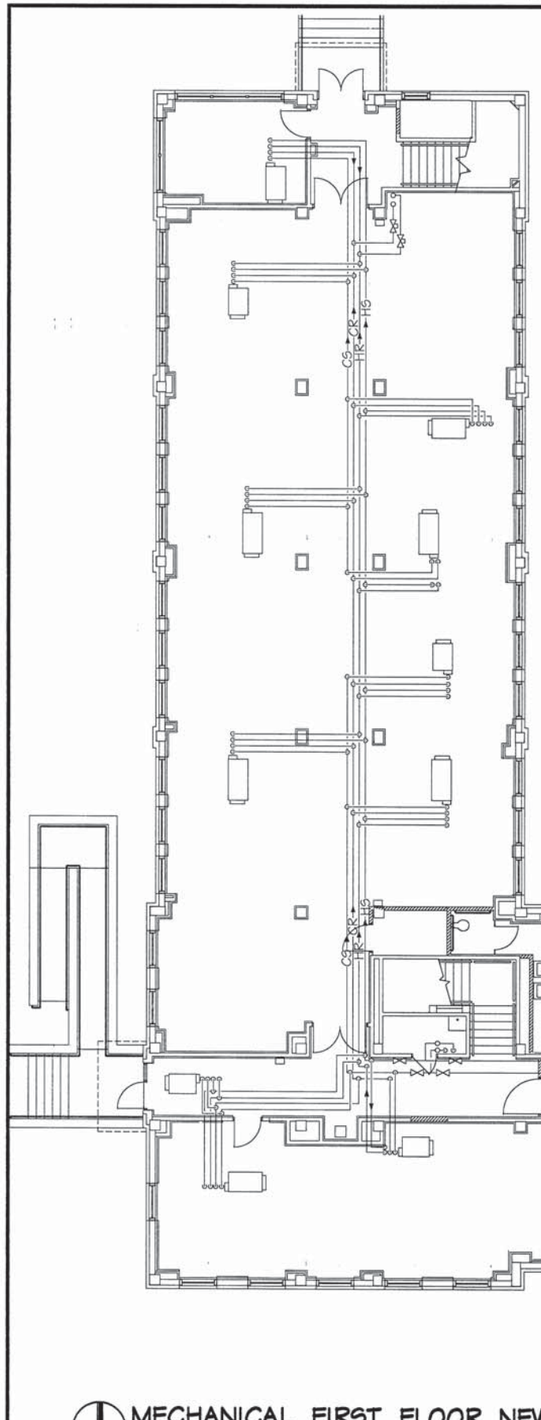

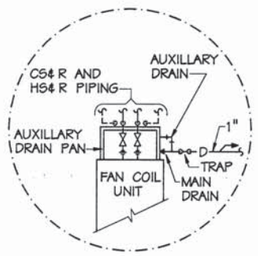

UNIT DRAIN CONNECTION DETAIL

NO SCALE

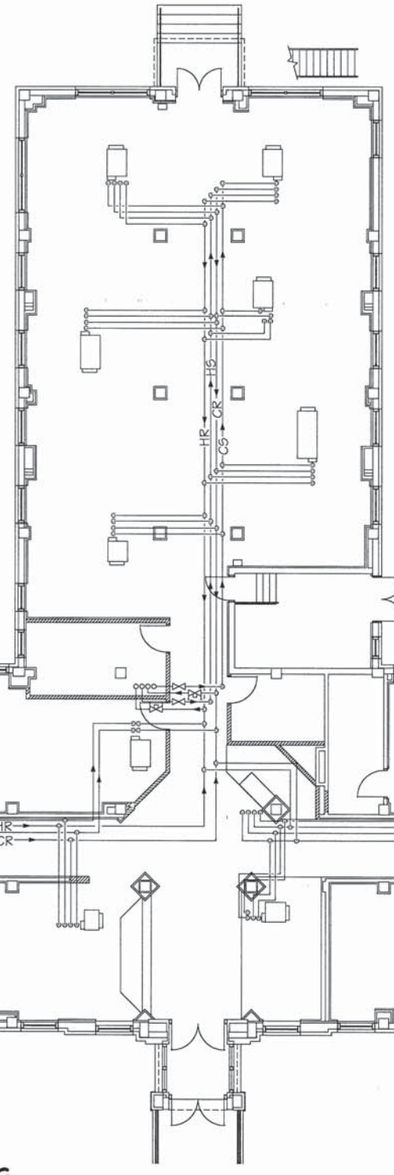

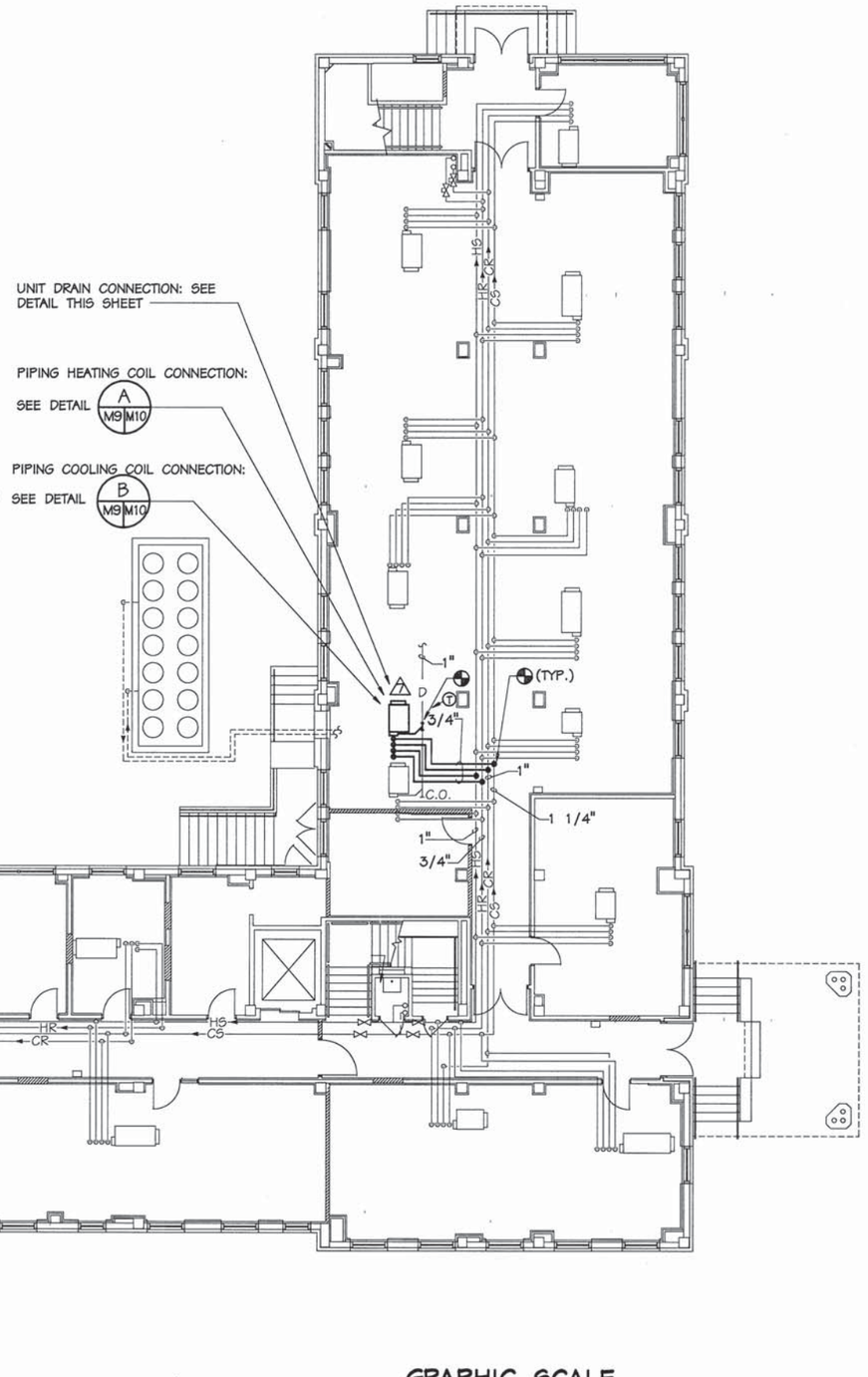

MECHANICAL FIRST FLOOR NEW WORK PLAN - PIPING

SCALE: 1/8"=1'-0"

FOR NEW WORK NOTES, SEE SHEET M-1

GRAPHIC SCALE

1/8"=1'-0" 0 4' 8' 16' 24'

VANSANT & GUSLER, INC.
CONSULTING ENGINEERS
NORFOLK, VIRGINIA

REVISIONS			
SYM	DESCRIPTION	DATE	APPROVED

SUBMITTED BY:
FIRM MEMBER / PRINCIPAL
APPROVED: DATE:
M.S.S.L. HAWKINSON 6-18-96
SATISFACTORY TO ACTIVITY
APPROVED: DATE:
J.H. SALLEY, JR. 7-16-96
SATISFACTORY TO COMNAVBASE FOR C.O. COMMANDER, NAVFAC

JOB ORDER NO. 1325020
DES. MRK DR. RED CHK. FRA
E.I.C. G. W. CRABBE JR
BR. MGR.
DIV. DIR

COMMONWEALTH OF VIRGINIA — No. 6772 — FRANK R. MORRON — 7/29/96 — PROFESSIONAL ENGINEER — SEAL

DEPT. OF THE NAVY
NAVAL STATION
NAVY PUBLIC WORKS CENTER
NAVAL STATION
NORFOLK, VIRGINIA
NACFACENGCOM
NORFOLK, VIRGINIA

RENOVATE OFFICE „BUILDING A-48 PART B"

MECH FIRST FLOOR NEW WORK PLAN-PIPE

CODE ID. NO. 80091
DRAWING SIZE: A1
CONST. CONT. NO.
N62470-96-B-7445
SPEC. 05-96-7445
NAVFAC DRAWING NO.
4,333,989
PWC DRAWING NO.
15,554AN
SHEET 41 OF 59

M-9

FAN COIL UNIT SCHEDULE

TAG	FAN DATA: AIR VOLUME (CFM)	ESP (IN WG)	MAX. MOTOR (WATTS)	VOLTS	Φ	COOLING COIL DATA: TOT. CAP. (MBH)	SENS. CAP. (MBH)	EDB (°F)	EWB (°F)	EWT (°F)	WATER FLOW (GPM)	MAX. WPD (FT WG)	CONTROL VALVE C_V	HEATING COIL DATA: CAPACITY (MBH)	EDB (°F)	EWT (°F)	WATER FLOW (GPM)	MAX. WPD (FT WG)	CONTROL VALVE C_V	REMARKS
1	195	.37	128	115	1	3.5	3.4	76.0	63.3	45	0.6	2.4	0.4	3.1	68.0	180	0.5	0.8	0.4	EXISTING
2	200	.34	130			4.8	4.2				0.9	7.0	0.6	2.6				0.8		
3	265	.32	145			5.2	5.0				1.0	1.3	0.6	4.1				0.1		
4	285	.29	145			5.9	6.6				1.1	2.4	0.7	4.3				0.1		
5	410	.26	170			7.8	7.0				1.4	3.1	0.9	5.3				0.1		
6	380	.34	170			8.6	7.8				1.6	3.8	1.0	3.7				0.1		
7	485	.52	220			9.5	8.7				1.9	5.4	1.2	6.7			0.7	1.0	0.5	NEW UNIT (1)
8	500	.39	220			9.8	9.4				1.6	4.0	1.0	6.2			0.5	0.1	0.4	EXISTING
9	565	.31	220			10.2	9.4				2.0	5.8	1.2	6.3			0.7	1.0	0.5	
10	480	.48	250			11.2	10.0				3.3	3.7	2.0	8.6			0.9	1.5	0.7	
11	680	.44	290			12.5	11.7				3.7	4.5	1.7	6.4			0.9	1.5	0.7	
12	730	.36	290			14.4	12.8				5.3	8.7	3.4	8.7			1.0	1.9	0.8	
13	725	.41	370			16.8	15.2				2.8	3.8	1.7	9.3			1.0	1.9	0.8	
14	755	.32	370			19.0	16.1				5.1	9.3	3.0	9.3			1.0	1.9	0.8	
15	980	.62	475			21.1	19.1				4.1	6.6	2.4	13.8			1.4	0.7	1.1	
16	900	.63	475			25.6	21.3				5.4	6.9	3.1	10.0			1.0	0.4	0.8	
17	555	.51	250			13.4	12.3				2.3	2.4	1.4	5.5			0.6	1.0	0.5	
18	765	.30	290			15.2	14.5				2.5	2.9	1.5	8.7			0.9	1.0	0.7	

REMARKS

(1) HORIZONTAL CONCEALED TYPE: PROVIDE WITH NEC APPROVED DISCONNECT MEANS.

REGISTER, GRILLE & DIFFUSER SCHEDULE

TAG NO.	MOUNTING	TYPE	SERVICE	MATERIAL	FINISH	NECK SIZE (IN.)	FACE SIZE (IN.)	PERFORMANCE: MAX CFM	APD	NC	REMARKS
A	LAY-IN	DIFFUSER	SUPPLY	ALUMINUM	OFF-WHITE	8"Φ	24x24	245	.05	29	
B						10"Φ		325		29	
C						12"Φ		395		28	
D						14"Φ		530	.06	30	
E						16"Φ		835	.11	35	
F	SURFACE					8"Φ		245	.05	29	
G						10"Φ		325	.05	29	
J						6"Φ	12x12	155	.04	22	
K	LAY-IN	REGISTER	RETURN			22x22	24x24	1005	.03	-	
L	SURFACE	REGISTER	RETURN			22x22	24x24	1005	.03		
M	SIDEWALL	GRILLE	EXHAUST			8x6	10x8	130	.05		35° DEFLECTION, 1/2" SPACING
N	SURFACE					8x6	10x8	130	.05		
O	SURFACE					10x8	12x10	230	.05		

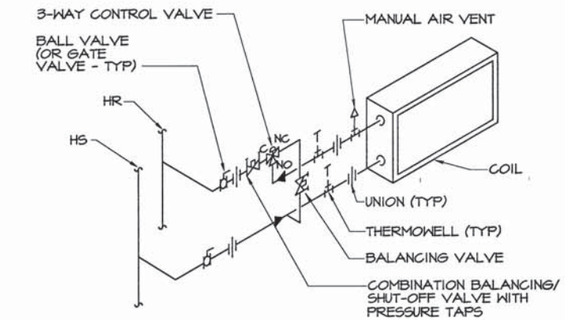

A M9 M10 **FCU HEATING COIL PIPING DETAIL**
NO SCALE

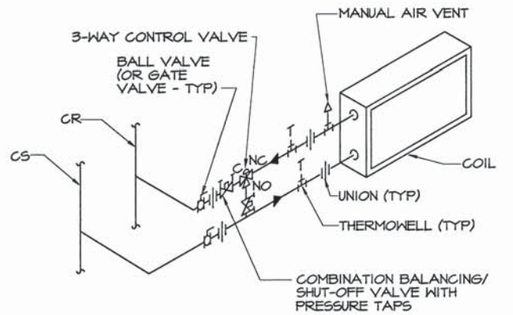

B M9 M10 **COOLING COIL PIPING DETAIL**
NO SCALE

REVISIONS

SYM	DESCRIPTION	DATE	APPROVED

JOB ORDER NO. 1325020
DES. MRK | DR. RED | CHK. FRA
E.I.C. G. W. CRABBE JR
BR. MGR.
DIV. DIR
APPROVED: DATE:
J.H.SALLEY,JR. 7-16-96
FOR C.O. COMMANDER, NAVFAC

SUBMITTED BY:
FIRM MEMBER / PRINCIPAL
APPROVED: DATE:
MS.S.L.HAWKINSON 6-18-96
SATISFACTORY TO ACTIVITY
APPROVED: DATE:
SATISFACTORY TO CONNAVBASE

COMMONWEALTH OF VIRGINIA — No. 8772 — Frank K. Monroe — 1/29/96 — PROFESSIONAL ENGINEER — SEAL

DEPT. OF THE NAVY
NAVAL STATION
NAVY PUBLIC WORKS CENTER
NORFOLK, VIRGINIA
NACFACENGCOM
NAVAL STATION NORFOLK, VIRGINIA
RENOVATE OFFICE BUILDING A-48 PART "B"
DETAILS AND SCHEDULES

CODE ID. NO. 80091
DRAWING SIZE: A1
CONST. CONT. NO. N62470-96-B-7445
SPEC. 05-96-7445
NAVFAC DRAWING NO. 4,333,990
PWC DRAWING NO. 15,554A0
SHEET 42 OF 59
M-10

VANSANT & GUSLER, INC.
CONSULTING ENGINEERS
NORFOLK, VIRGINIA

A-54 Record Drawings

REVISIONS				
SYM	DESCRIPTION	DATE	SATISFACTORY	APPROVED BY

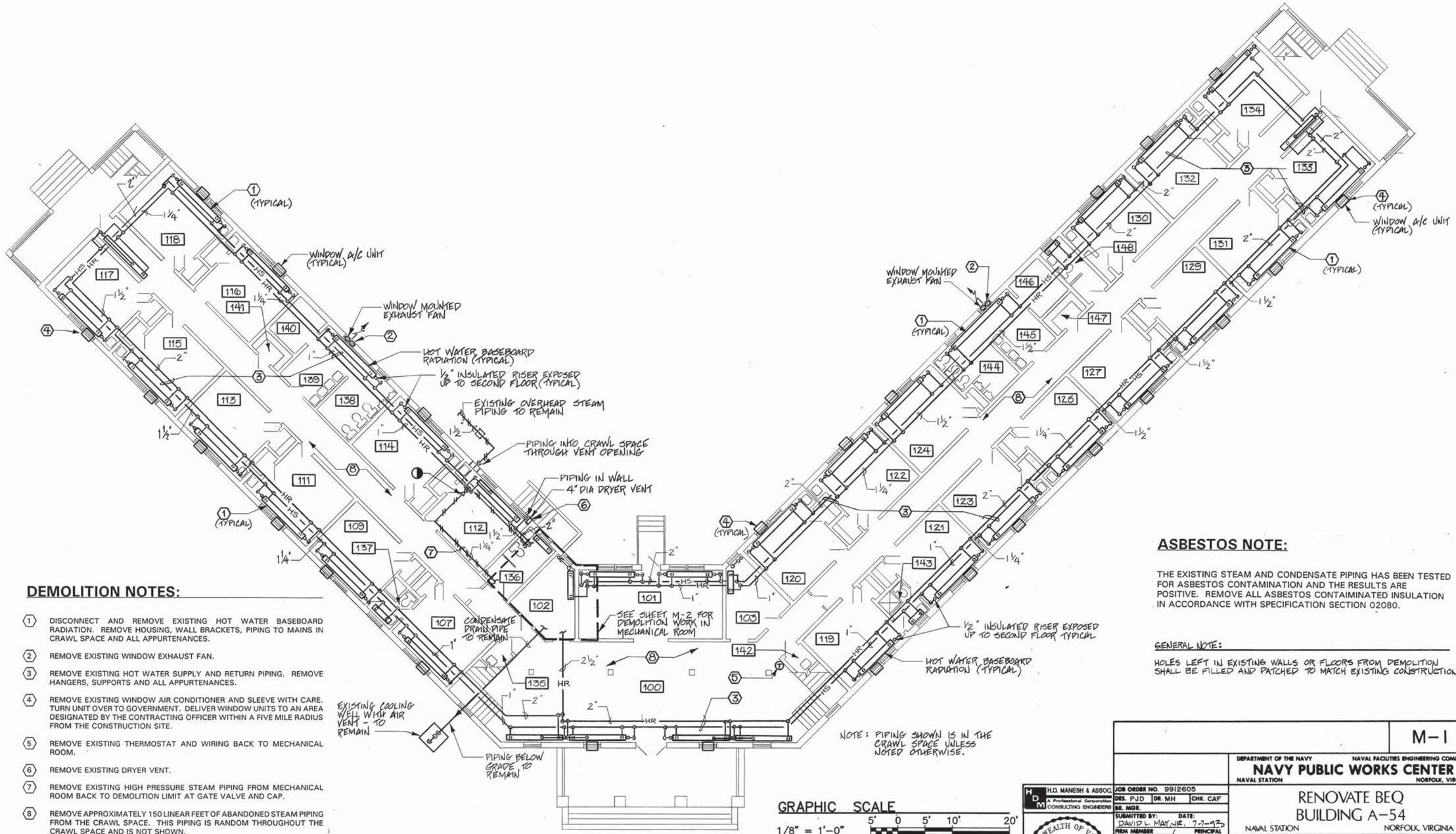

DEMOLITION NOTES:

1. DISCONNECT AND REMOVE EXISTING HOT WATER BASEBOARD RADIATION. REMOVE HOUSING, WALL BRACKETS, PIPING TO MAINS IN CRAWL SPACE AND ALL APPURTENANCES.
2. REMOVE EXISTING WINDOW EXHAUST FAN.
3. REMOVE EXISTING HOT WATER SUPPLY AND RETURN PIPING. REMOVE HANGERS, SUPPORTS AND ALL APPURTENANCES.
4. REMOVE EXISTING WINDOW AIR CONDITIONER AND SLEEVE WITH CARE. TURN UNIT OVER TO GOVERNMENT. DELIVER WINDOW UNITS TO AN AREA DESIGNATED BY THE CONTRACTING OFFICER WITHIN A FIVE MILE RADIUS FROM THE CONSTRUCTION SITE.
5. REMOVE EXISTING THERMOSTAT AND WIRING BACK TO MECHANICAL ROOM.
6. REMOVE EXISTING DRYER VENT.
7. REMOVE EXISTING HIGH PRESSURE STEAM PIPING FROM MECHANICAL ROOM BACK TO DEMOLITION LIMIT AT GATE VALVE AND CAP.
8. REMOVE APPROXIMATELY 150 LINEAR FEET OF ABANDONED STEAM PIPING FROM THE CRAWL SPACE. THIS PIPING IS RANDOM THROUGHOUT THE CRAWL SPACE AND IS NOT SHOWN.

MECHANICAL FIRST FLOOR PLAN — DEMOLITION

SCALE: 1/8" = 1'-0"

ASBESTOS NOTE:

THE EXISTING STEAM AND CONDENSATE PIPING HAS BEEN TESTED FOR ASBESTOS CONTAMINATION AND THE RESULTS ARE POSITIVE. REMOVE ALL ASBESTOS CONTAIMINATED INSULATION IN ACCORDANCE WITH SPECIFICATION SECTION 02080.

GENERAL NOTE:

HOLES LEFT IN EXISTING WALLS OR FLOORS FROM DEMOLITION SHALL BE FILLED AND PATCHED TO MATCH EXISTING CONSTRUCTION

M-1

DEPARTMENT OF THE NAVY — NAVAL FACILITIES ENGINEERING COMMAND
NAVY PUBLIC WORKS CENTER
NAVAL STATION — NORFOLK, VIRGINIA

RENOVATE BEQ
BUILDING A-54
NAVAL STATION — NORFOLK, VIRGINIA

MECHANICAL FIRST FLOOR
DEMOLITION PLAN AND NOTES

H.D. MANESH & ASSOC. A Professional Corporation CONSULTING ENGINEERS

JOB ORDER NO. 9912605
DES. PJD | DR. MH | CHK. CAF
BR. MGR.
SUBMITTED BY: DAVID L. MAYNE, 7-7-93 (FIRM MEMBER / PRINCIPAL)
RIC G.M. CRABBE P.E. NJCR
DIV. DIR. R.H. IVES
APPROVED: G. SPENCE 6-25-93 SATISFACTORY TO ACTIVITY
APPROVED: J.H. SALLEY, JR. 6-9-93 FOR C.O. FOR COMMANDER, NAVFAC

COMMONWEALTH OF VIRGINIA — CLAUDE N. FORD, JR. — 2908 — PROFESSIONAL ENGINEER

SIZE	CODE IDENT NO.	NAVFAC DRAWING NO.	PWC DRAWING NO.
D	80091	4268906	14822AK

CONSTR. CONTR. NO. N62470-B-93-2714
SCALE: GRAPHIC
SPEC. 05-93-2714
SHEET 100 OF 182

REVISIONS				
SYM	DESCRIPTION	DATE	SATISFACTORY	APPROVED BY

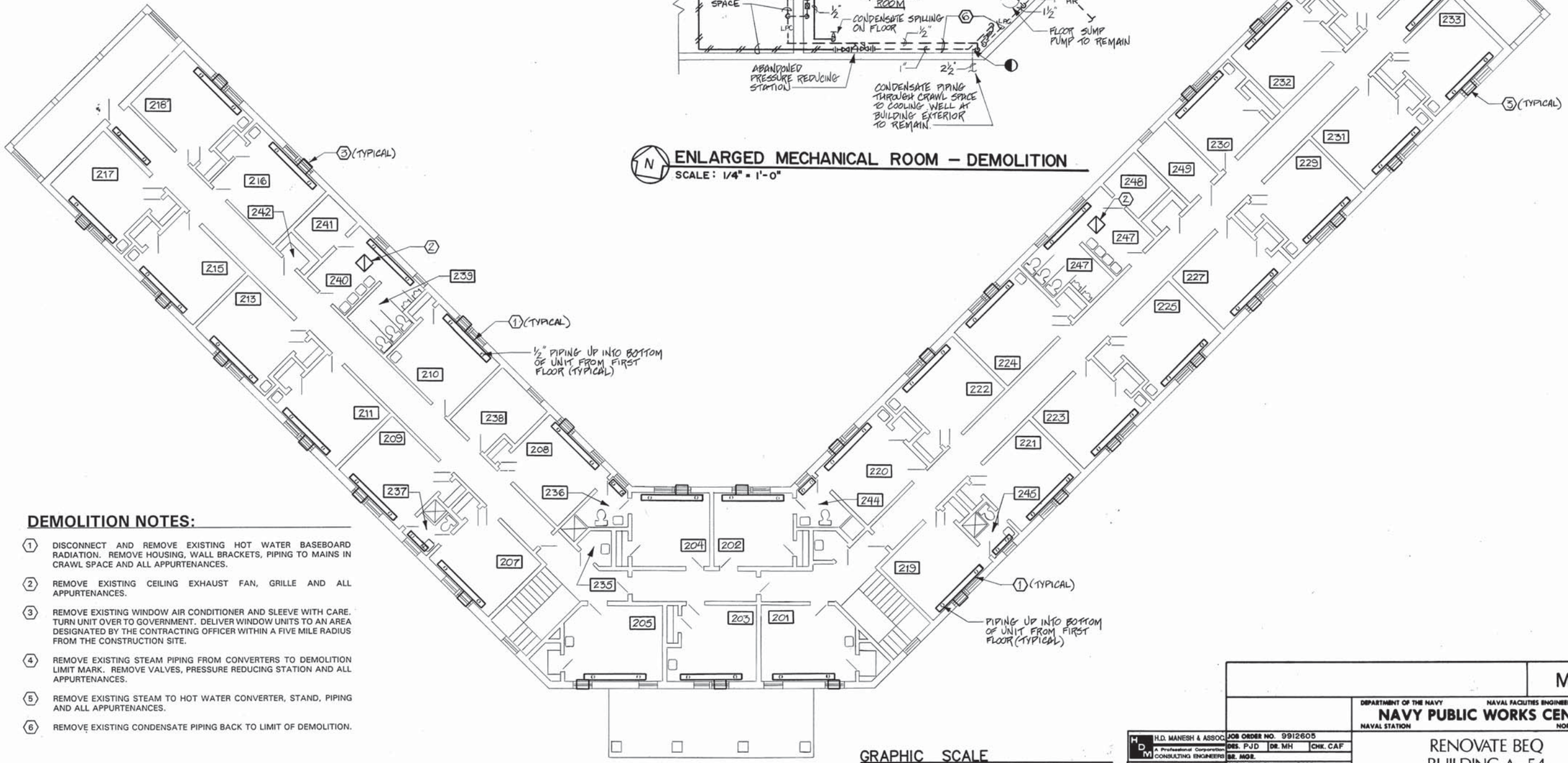

N **ENLARGED MECHANICAL ROOM — DEMOLITION**
SCALE: 1/4" = 1'-0"

DEMOLITION NOTES:

1. DISCONNECT AND REMOVE EXISTING HOT WATER BASEBOARD RADIATION. REMOVE HOUSING, WALL BRACKETS, PIPING TO MAINS IN CRAWL SPACE AND ALL APPURTENANCES.
2. REMOVE EXISTING CEILING EXHAUST FAN, GRILLE AND ALL APPURTENANCES.
3. REMOVE EXISTING WINDOW AIR CONDITIONER AND SLEEVE WITH CARE. TURN UNIT OVER TO GOVERNMENT. DELIVER WINDOW UNITS TO AN AREA DESIGNATED BY THE CONTRACTING OFFICER WITHIN A FIVE MILE RADIUS FROM THE CONSTRUCTION SITE.
4. REMOVE EXISTING STEAM PIPING FROM CONVERTERS TO DEMOLITION LIMIT MARK. REMOVE VALVES, PRESSURE REDUCING STATION AND ALL APPURTENANCES.
5. REMOVE EXISTING STEAM TO HOT WATER CONVERTER, STAND, PIPING AND ALL APPURTENANCES.
6. REMOVE EXISTING CONDENSATE PIPING BACK TO LIMIT OF DEMOLITION.

N **MECHANICAL SECOND FLOOR PLAN — DEMOLITION**
SCALE: 1/8" = 1'-0"

GRAPHIC SCALE
1/8" = 1'-0" 5' 0 5' 10' 20'
1/4" = 1'-0" 5' 0 5'

H.D. MANESH & ASSOC. A Professional Corporation CONSULTING ENGINEERS

COMMONWEALTH OF VIRGINIA — CLYDE K. FORD, JR. — 2908 — PROFESSIONAL ENGINEER

M-2

DEPARTMENT OF THE NAVY — NAVAL FACILITIES ENGINEERING COMMAND
NAVY PUBLIC WORKS CENTER
NAVAL STATION — NORFOLK, VIRGINIA

RENOVATE BEQ
BUILDING A-54
NAVAL STATION — NORFOLK, VIRGINIA

MECHANICAL SECOND FLOOR
DEMOLITION PLAN, ENLARGED PLAN AND NOTES

JOB ORDER NO.	9912605
DES. PJD / DR. MH / CHK. CAF	
BR. MGR.	
SUBMITTED BY: DAVID L. MAY, JR. 7-7-93	FIRM MEMBER / PRINCIPAL
BIC G.W. CRABBE	P.P. JOR
DIV. DIR. R.H. IVES	
APPROVED: G. SPENCE DATE: 6-25-93	SATISFACTORY TO ACTIVITY
APPROVED: J. H. SALLEY, JR. 6-9-93	FOR C.O. FOR COMMANDER, NAVFAC

SIZE	CODE IDENT NO.	NAVFAC DRAWING NO.	PWC DRAWING NO.
D	80091	4268907	14822AL

CONSTR. CONTR. NO. N62470-8-93-2714
SCALE: GRAPHIC — SPEC. 05-93-2714 — SHEET 101 OF 182

REVISIONS				
SYM	DESCRIPTION	DATE	SATISFACTORY	APPROVED BY

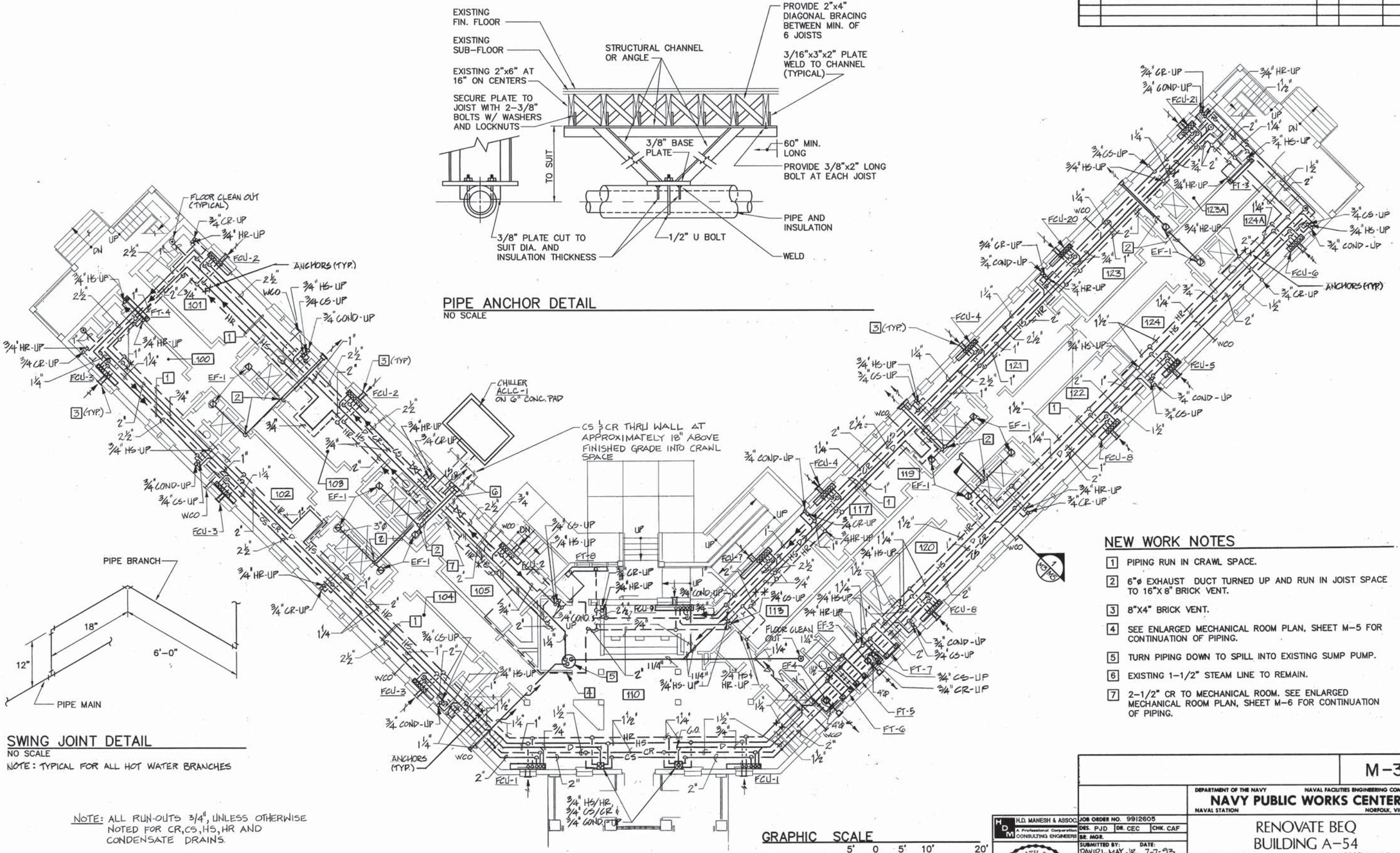

PIPE ANCHOR DETAIL
NO SCALE

SWING JOINT DETAIL
NO SCALE
NOTE: TYPICAL FOR ALL HOT WATER BRANCHES

NOTE: ALL RUN-OUTS ¾", UNLESS OTHERWISE NOTED FOR CR, CS, HS, HR AND CONDENSATE DRAINS.

MECHANICAL FIRST FLOOR PLAN – NEW WORK
SCALE: 1/8"=1'-0"

GRAPHIC SCALE
1/8" = 1'-0"
5' 0 5' 10' 20'

NEW WORK NOTES

1. PIPING RUN IN CRAWL SPACE.
2. 6"ø EXHAUST DUCT TURNED UP AND RUN IN JOIST SPACE TO 16"X 8" BRICK VENT.
3. 8"X4" BRICK VENT.
4. SEE ENLARGED MECHANICAL ROOM PLAN, SHEET M-5 FOR CONTINUATION OF PIPING.
5. TURN PIPING DOWN TO SPILL INTO EXISTING SUMP PUMP.
6. EXISTING 1-1/2" STEAM LINE TO REMAIN.
7. 2-1/2" CR TO MECHANICAL ROOM. SEE ENLARGED MECHANICAL ROOM PLAN, SHEET M-6 FOR CONTINUATION OF PIPING.

H.D. MANESH & ASSOC. A Professional Corporation CONSULTING ENGINEERS

COMMONWEALTH OF VIRGINIA CLAUDE K. FORD, JR. Certificate No. 2908 PROFESSIONAL ENGINEER

JOB ORDER NO. 9912605
DES. PJD | DR. CEC | CHK. CAF
BR. MGR.
SUBMITTED BY: DAVID L. MAY, JR. DATE: 7-7-93 FIRM MEMBER / PRINCIPAL
BIC G.W. CRABBE
DIV. DIR. R.H. IVES
APPROVED: G. SPENCE DATE: 6-25-93 SATISFACTORY TO ACTIVITY
APPROVED: J. H. SALLEY, JR. DATE: 6-9-93 FOR C.O. FOR COMMANDER, NAVFAC

M-3

DEPARTMENT OF THE NAVY — NAVAL FACILITIES ENGINEERING COMMAND
NAVY PUBLIC WORKS CENTER
NAVAL STATION — NORFOLK, VIRGINIA

RENOVATE BEQ BUILDING A-54
NAVAL STATION — NORFOLK, VIRGINIA

MECHANICAL FIRST FLOOR PLAN, NEW WORK

SIZE	CODE IDENT NO.	NAVFAC DRAWING NO.	PWC DRAWING NO.
D	80091	4268908	14822AM

CONSTR. CONTR. NO. N62470-B-93-2714
SCALE: GRAPHIC — SPEC. 05-93-2714 — SHEET 102 OF 182

REVISIONS				
SYM	DESCRIPTION	DATE	SATISFACTORY	APPROVED BY

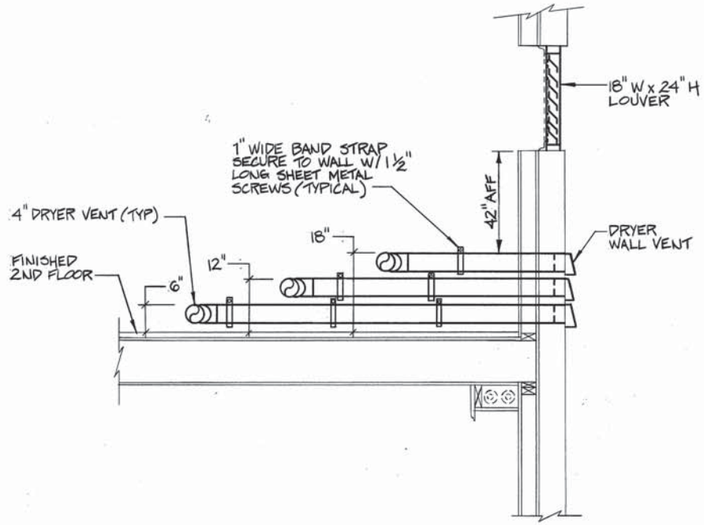

1 M4 M4 **SECTION**
SCALE: 3/4" = 1'-0"

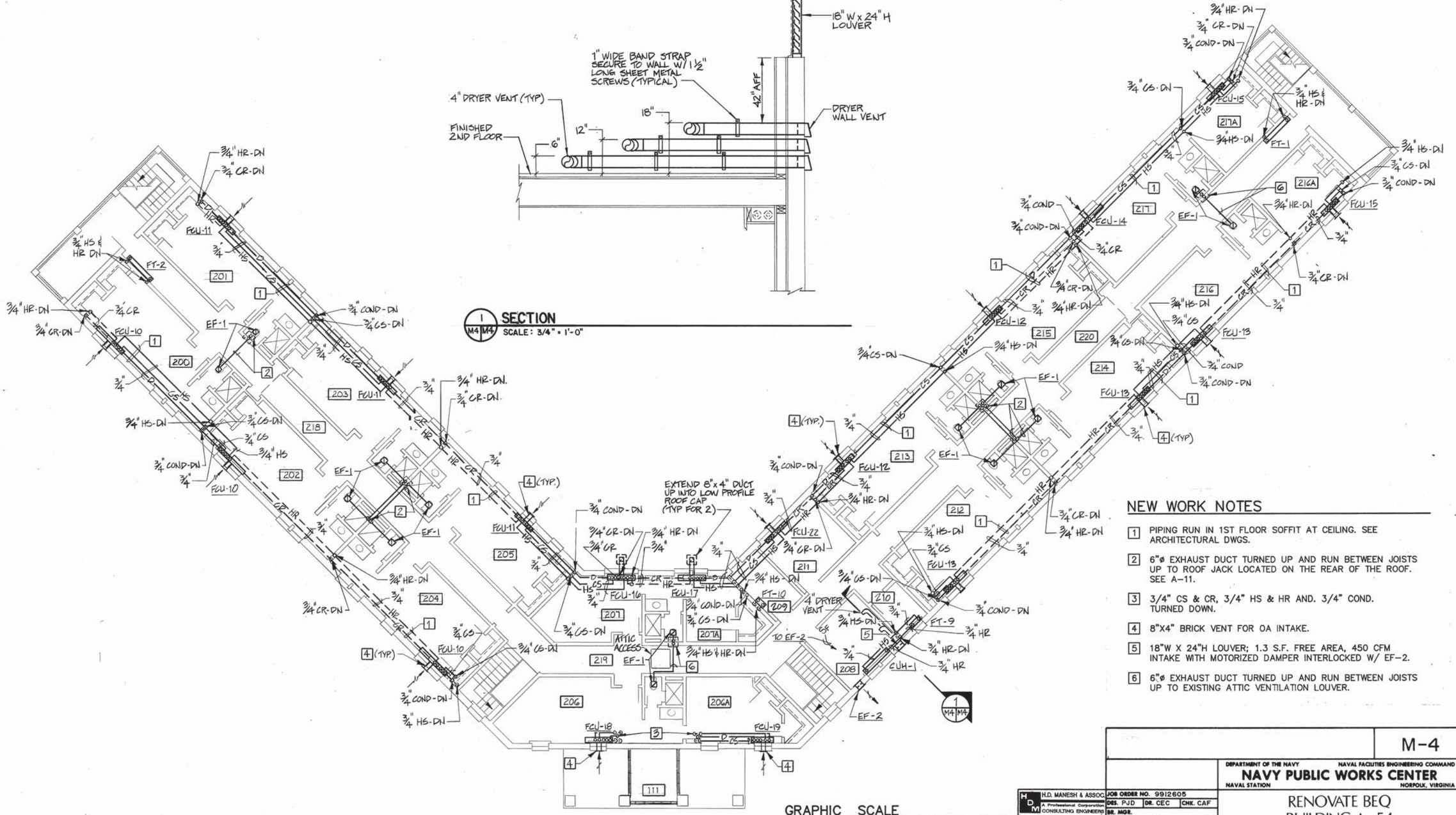

NEW WORK NOTES

1. PIPING RUN IN 1ST FLOOR SOFFIT AT CEILING. SEE ARCHITECTURAL DWGS.
2. 6"ø EXHAUST DUCT TURNED UP AND RUN BETWEEN JOISTS UP TO ROOF JACK LOCATED ON THE REAR OF THE ROOF. SEE A-11.
3. 3/4" CS & CR, 3/4" HS & HR AND. 3/4" COND. TURNED DOWN.
4. 8"X4" BRICK VENT FOR OA INTAKE.
5. 18"W X 24"H LOUVER; 1.3 S.F. FREE AREA, 450 CFM INTAKE WITH MOTORIZED DAMPER INTERLOCKED W/ EF-2.
6. 6"ø EXHAUST DUCT TURNED UP AND RUN BETWEEN JOISTS UP TO EXISTING ATTIC VENTILATION LOUVER.

GRAPHIC SCALE
1/8" = 1'-0"
5' 0 5' 10' 20'

2 **MECHANICAL SECOND FLOOR PLAN – NEW WORK**
SCALE: 1/8"=1'-0"

M-4

DEPARTMENT OF THE NAVY — NAVAL FACILITIES ENGINEERING COMMAND
NAVY PUBLIC WORKS CENTER
NAVAL STATION — NORFOLK, VIRGINIA

RENOVATE BEQ
BUILDING A-54
NAVAL STATION — NORFOLK, VIRGINIA

MECHANICAL SECOND FLOOR PLAN - NEW WORK

H.D. MANESH & ASSOC. A Professional Corporation CONSULTING ENGINEERS

COMMONWEALTH OF VIRGINIA — DAVID L. MAY — 2908 — PROFESSIONAL ENGINEER

JOB ORDER NO.	9912605
DES. PJD / DR. CEC / CHK. CAF	
BR. MGR.	
SUBMITTED BY: / PRINCIPAL	DAVID L. MAY, JR. 7-7-93
PROJ. MANAGER	G.W. CRABBE
DIV. DIR.	R.H. IVES
APPROVED: / SATISFACTORY TO ACTIVITY	S. SPENCE 6-25-93
APPROVED: / FOR C.O. FOR COMMANDER, NAVFAC	J.H. SALLEY, JR. 6-9-93
SIZE	D
CODE IDENT NO.	80091
NAVFAC DRAWING NO.	4268909
PWC DRAWING NO.	14822.AN
CONSTR. CONTR. NO.	N62470-B-93-2714
SCALE: GRAPHIC	SPEC. 05-93-2714
SHEET	103 OF 182

LEGEND

—HS—	HEATING WATER SUPPLY
--HR--	HEATING WATER RETURN
—CS—	CHILLED WATER SUPPLY
--CR--	CHILLED WATER RETURN
//-//-//	HIGH PRESSURE STEAM (HPS)
—LPS—	LOW PRESSURE STEAM
//-//-//	HIGH PRESSURE CONDENSATE (HPC)
--LPC--	LOW PRESSURE CONDENSATE
—D—	CONDENSATE DRAIN
	POINT OF DEMOLITION LIMIT
	POINT OF CONNECTION NEW TO EXISTING
	NEW PIPING, DUCT, EQUIPMENT, ETC.
	3-WAY CONTROL VALVE – PNEUMATIC OPERATOR
	PRESSURE REDUCING VALVE
	PRESSURE RELIEF VALVE
	CHECK VALVE
	GATE VALVE
	GLOBE VALVE
	COMBINATION BALANCING AND SHUTOFF VALVE WITH PRESSURE TAPS (GLOBE TYPE)
	UNION
T	STEAM TRAP
	PIPE TURNING DOWN
	PIPE TURNING UP
	DOWNWARD SLOPE
	DIRECTION OF FLOW
	FLEXIBLE PIPE CONNECTION
	STRAINER
	MANUAL AIR VENT (MV)
	PRESSURE GAUGE
	THERMOMETER
T	THERMOWELL
T	THERMOSTAT
BD	BALANCING DAMPER (MULTI-LEAF)
	ELBOW WITH TURNING VANES
	FLEXIBLE CONNECTION
	ACOUSTICAL LINING
S_F	RETURN DUCT SECTION

LEGEND ABBREVIATIONS

AFF	ABOVE FINISHED FLOOR
APD	AIR PRESSURE DROP
DB	DRY BULB
ESP	EXTERNAL STATIC PRESSURE
EDB	ENTERING DRY BULB
EF	EXHAUST FAN
EWT	ENTERING WATER TEMPERATURE
EWB	ENTERING WET BULB
FCU	FAN COOL UNIT
LWB	LEAVING WET BULB
LDB	LEAVING DRY BULB
LWT	LEAVING WATER TEMPERATURE
OA	OUTSIDE AIR
PD	PRESSURE DROP
SP	STATIC PRESSURE
TSP	TOTAL STATIC PRESSURE
WCO	WALL CLEAN OUT

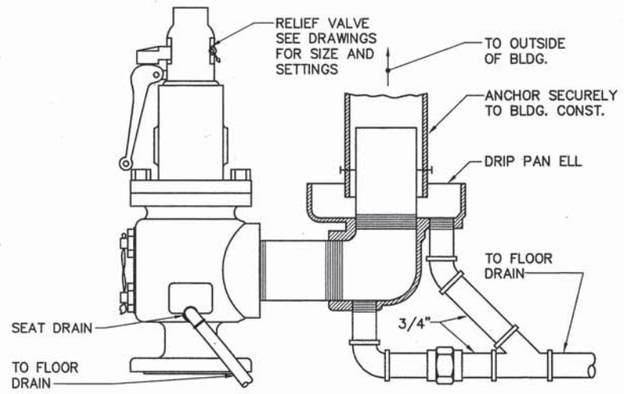

STEAM RELIEF VALVE DRIP PAN ELL
NO SCALE

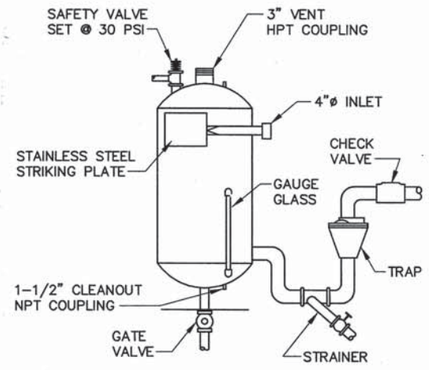

150 PSI DESIGN PRESSURE

FLASH TANK DETAIL
NO SCALE

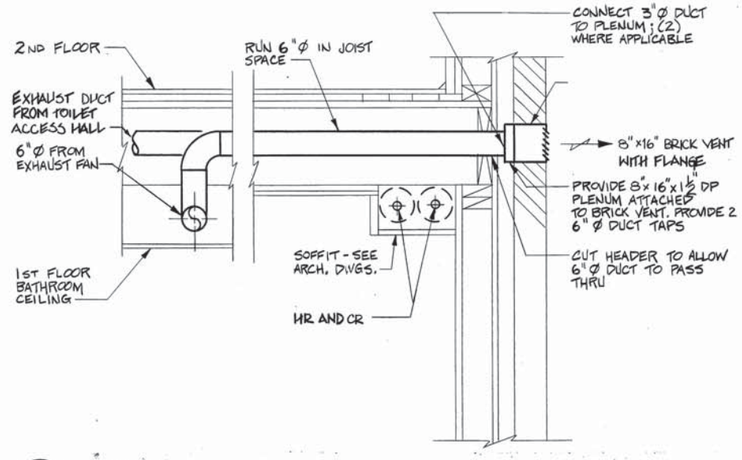

1 M3|M5 SECTION
SCALE: 1/2" = 1'-0"

GRAPHIC SCALE
1/2" = 1'-0"
2' 1' 0 1' 2' 4' 6'

REVISIONS				
SYM	DESCRIPTION	DATE	SATISFACTORY	APPROVED BY

NOTES

1. SLAB DIMENSIONS SHALL EXCEED EQUIPMENT DIMENSIONS BY 6" ON ALL SIDES.
2. REINFORCEMENT DETAILING & PLACEMENT SHALL CONFORM TO ACI 315 & ACI 318. CONCRETE SHALL CONFORM TO ASTM C94. CONCRETE WORK SHALL CONFORM TO ACI 318, PART TITLED "CONSTRUCTION REQUIREMENTS." COMPRESSIVE STRENGTH IN 28 DAYS SHALL BE 3,000 PSI. TOTAL AIR CONTENT OF EXTERIOR CONCRETE SHALL BE BETWEEN 5 & 7% BY VOLUME. SLUMP SHALL BE BETWEEN 3 & 4 INCHES. CONCRETE SHALL BE CURED FOR 7 DAYS AFTER PLACEMENT.
3. 1" CHAMFER ALL EXPOSED EDGES.

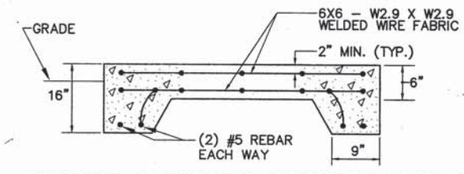

CONCRETE CHILLER SUPPORT SLAB DETAIL
NO SCALE

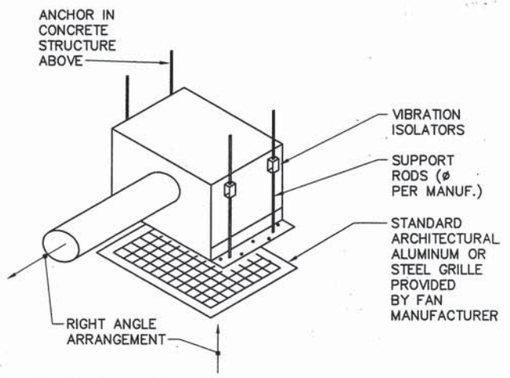

IN-LINE EXHAUST FAN
NO SCALE

H.D. MANESH & ASSOC. A Professional Corporation CONSULTING ENGINEERS

COMMONWEALTH OF VIRGINIA — CLAUDE K. FORD, JR. — Certificate No. 2908 — PROFESSIONAL ENGINEER

M-5

DEPARTMENT OF THE NAVY — NAVAL FACILITIES ENGINEERING COMMAND
NAVY PUBLIC WORKS CENTER
NAVAL STATION — NORFOLK, VIRGINIA

RENOVATE BEQ
BUILDING A-54
NAVAL STATION — NORFOLK, VIRGINIA

LEGEND AND SCHEDULE

JOB ORDER NO.	9912605
DES. PJD / DR. CEC / CHK. CAF	
BR. MGR.	
SUBMITTED BY: / DATE:	DAVID L. MAY, JR. 7-7-93
FIRM MEMBER / PRINCIPAL	
RIC	G.W. CRABBE / P.P.NOR
DIV. DIR.	R.H. IVES
APPROVED: / DATE:	G. SPENCE 6-25-93
SATISFACTORY TO ACTIVITY	
APPROVED: / DATE:	J. H. SALLEY, JR. 6-9-93
FOR C.O. FOR COMMANDER, NAVFAC	

SIZE	CODE IDENT NO.	NAVFAC DRAWING NO.	PWC DRAWING NO.
D	80091	4268910	1482240
		CONSTR. CONTR. NO.	N62470-B-93-2714
SCALE: GRAPHIC		SPEC. 05-93-2714	SHEET 104 OF 182

REVISIONS				
SYM	DESCRIPTION	DATE	SATISFACTORY	APPROVED BY

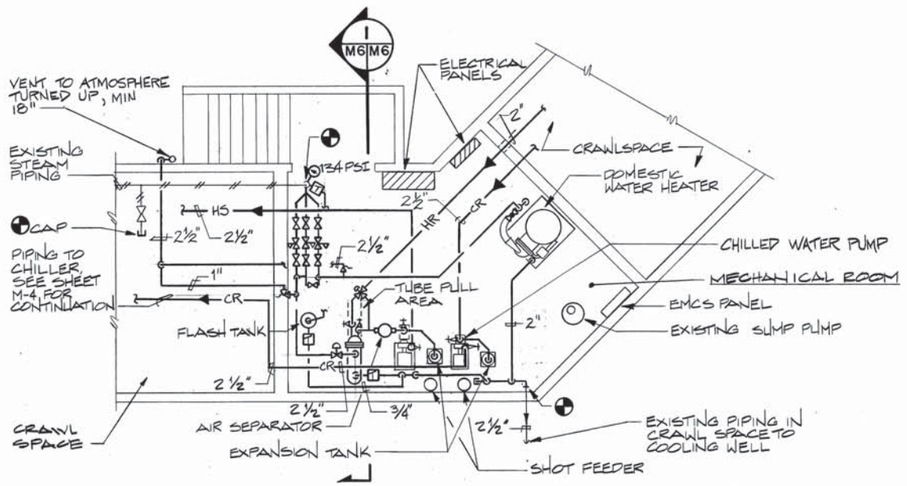

N ENLARGED MECHANICAL ROOM – NEW WORK

SCALE: 1/4" = 1'-0"

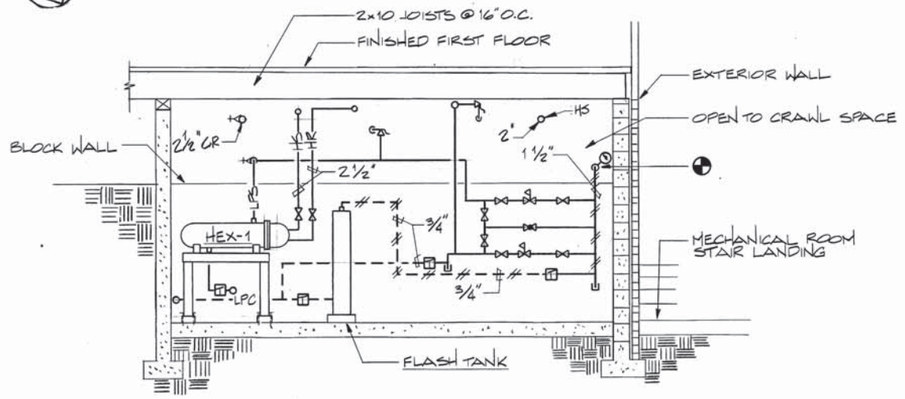

1 M6|M6 SECTION

SCALE: 1/2" = 1'-0"

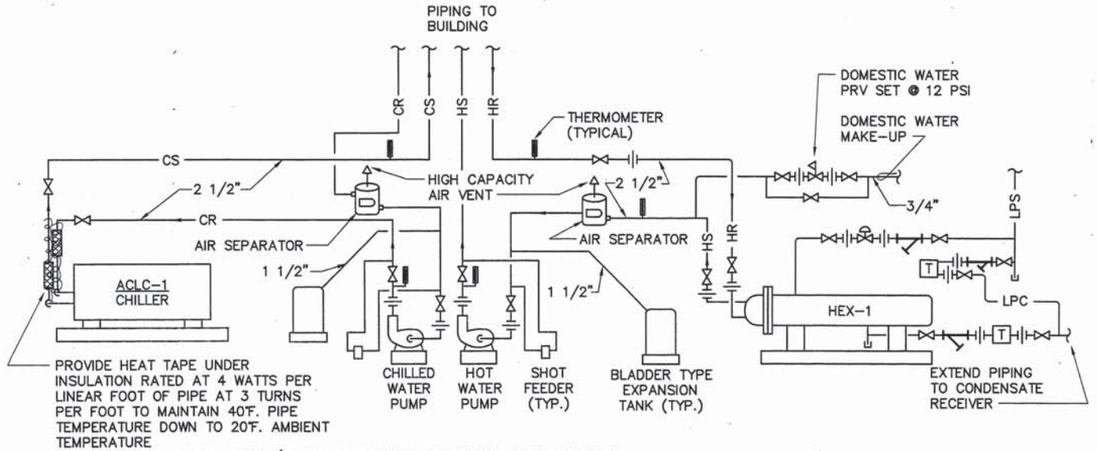

COMBINATION CHILLED/HOT WATER PIPING DIAGRAM

NOT TO SCALE

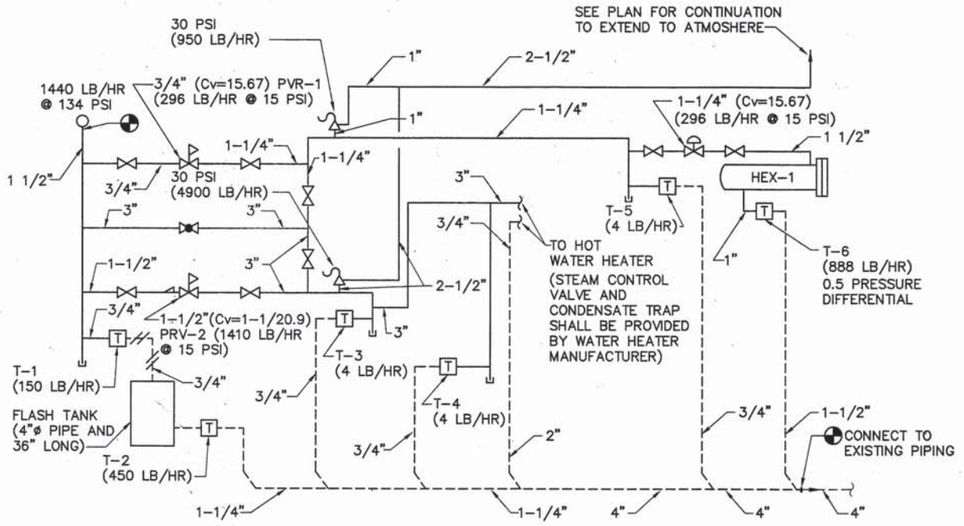

PRESSURE REDUCING STATION SCHEMATIC

NOT TO SCALE

GRAPHIC SCALE

1/4" = 1'-0" (5' 0 5' 10')

1/2" = 1'-0" (2' 1' 0 1' 2' 4' 6')

H.D. MANESH & ASSOC. A Professional Corporation CONSULTING ENGINEERS

COMMONWEALTH OF VIRGINIA — CLYDE A. FORD, JR. — Registered No. 2908 — PROFESSIONAL ENGINEER

M-6

DEPARTMENT OF THE NAVY — NAVAL FACILITIES ENGINEERING COMMAND

NAVY PUBLIC WORKS CENTER

NAVAL STATION — NORFOLK, VIRGINIA

RENOVATE BEQ BUILDING A-54

NAVAL STATION — NORFOLK, VIRGINIA

ENLARGED MECHANICAL ROOM PLAN AND PIPING DIAGRAMS

JOB ORDER NO.	9912605
DES.	PJD
DR.	CEC
CHK.	CAF
BR. MGR.	
SUBMITTED BY:	DAVID L. MAY, JR. 7-7-93
FIRM MEMBER / PRINCIPAL	
BC	G.W. CRABBE
DIV. DIR.	E.H. IVES
APPROVED:	G. SPENCE 6-25-93
SATISFACTORY TO ACTIVITY	
APPROVED:	J.H. SALLEY, JR. 6-9-93
FOR C.O. FOR COMMANDER, NAVFAC	

SIZE	CODE IDENT NO.	NAVFAC DRAWING NO.	PWC DRAWING NO.
D	80091	4268911	14822AP
SCALE: GRAPHIC		CONSTR. CONTR. NO. N62470-B-93-2714	
		SPEC. 05-93-2714	SHEET 105 OF 182

REVISIONS				
SYM	DESCRIPTION	DATE	SATISFACTORY	APPROVED BY

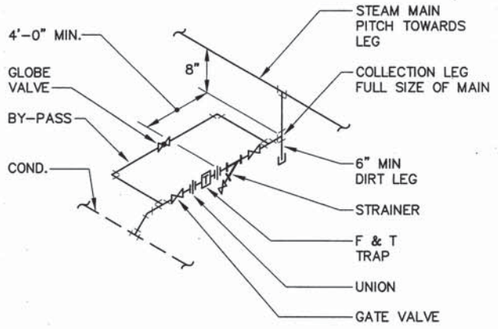

LOW PRESSURE MAIN STEAM DRIP DETAIL
NO SCALE

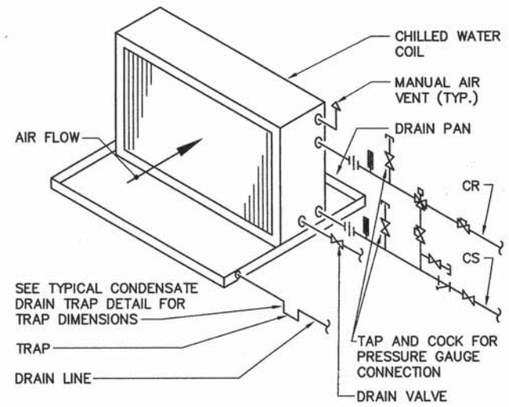

CHILLED WATER COIL PIPING DETAIL
NO SCALE

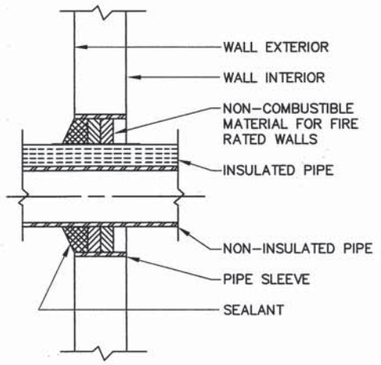

PIPE THRU WALL ABOVE GRADE DETAIL
NO SCALE

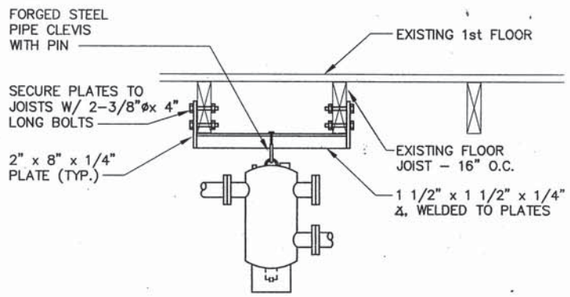

AIR SEPARATOR SUPPORT DETAIL
NO SCALE

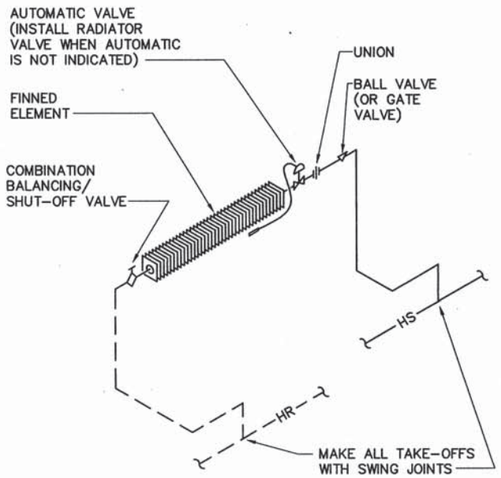

HOT WATER FINTUBE PIPING DETAIL
NO SCALE

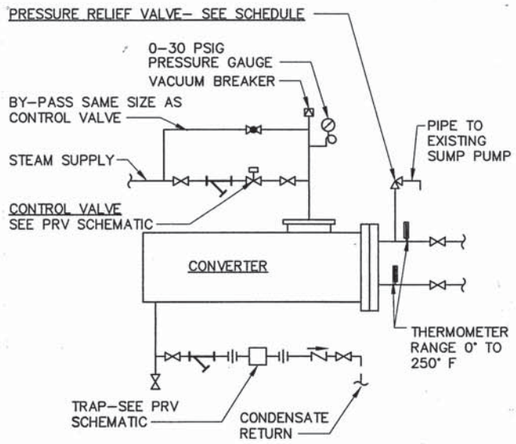

CONVERTER PIPING DETAIL
NO SCALE

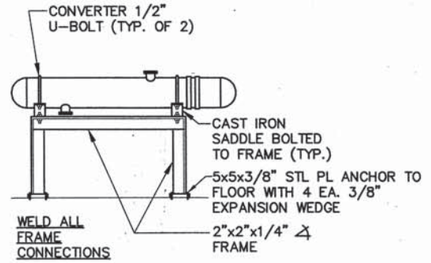

CONVERTER SUPPORT DETAIL
NO SCALE

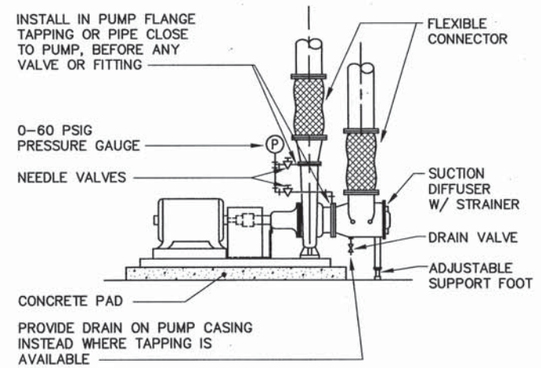

BASE MOUNTED PUMP DETAIL WITH SUCTION DIFFUSER
NO SCALE

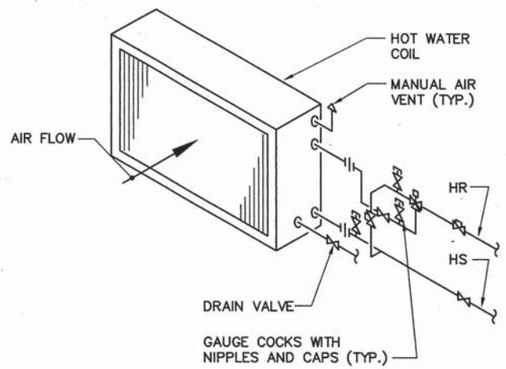

HOT WATER COIL PIPING DETAIL
NO SCALE

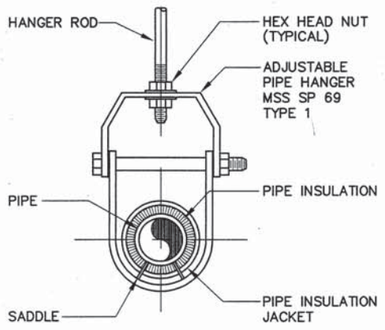

PIPE HANGER DETAIL
NO SCALE

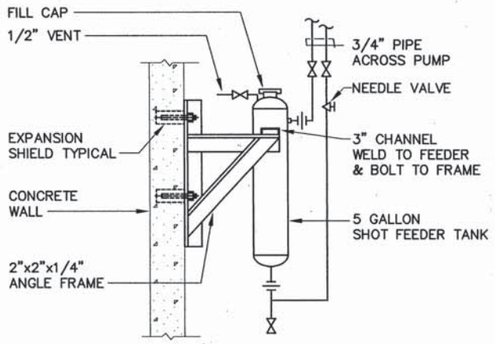

SHOT FEEDER DETAIL
NO SCALE

M-7

DEPARTMENT OF THE NAVY — NAVAL FACILITIES ENGINEERING COMMAND
NAVY PUBLIC WORKS CENTER
NAVAL STATION — NORFOLK, VIRGINIA

H.D. MANESH & ASSOC. — A Professional Corporation — CONSULTING ENGINEERS

COMMONWEALTH OF VIRGINIA — CLAUDE K. [illegible] — 2908 — PROFESSIONAL ENGINEER

JOB ORDER NO.	9912605
DES. PAS / DR. AKH / CHK. CAF	
BR. MGR	
SUBMITTED BY: / DATE:	DAVID L. MAY, JR. 7-7-93
FIRM MEMBER / PRINCIPAL	
BR. G.W. CRABBE / F.P. JOR	
DIV. DIR. R.H. IVES	
APPROVED: / DATE:	G. SPENCE 6-25-93
SATISFACTORY TO ACTIVITY	
APPROVED: / DATE:	J.H. SALLEY, JR. 6-9-93
FOR C.O. FOR COMMANDER, NAVFAC	

RENOVATE BEQ
BUILDING A-54
NAVAL STATION — NORFOLK, VIRGINIA

MECHANICAL DETAILS

SIZE	CODE IDENT NO.	NAVFAC DRAWING NO.	PWC DRAWING NO.
D	80091	4268912	14822AQ

CONSTR. CONTR. NO. N62470-B-93-2714
SCALE: GRAPHIC — SPEC. 05-93-2714 — SHEET 06 OF 182

FAN COIL UNIT SCHEDULE

TAG	CFM		COOLING CAPACITY (BTUH)				E.A.T.		HEATING CAPACITY (BTUH)				ELECTRICAL		POWER INPUT (PSC) (W)	REMARKS
	SUPPLY	O.A.	TOTAL	SENSIBLE	GPM	PD. FT.(H_2O)	FDB	FWB	MIN. (BTUH)	GPM	PD. FT.(H_2O)	HTG. E.A.T.	VOLTS	ø		
FCU-1	585	110	18213	13445	3.6	3.8	77.3	66.0	9641	1.0	1.4	59.4	120	1	265	FLOOR MOUNTED EXPOSED W/ SLOPED TOP
FCU-2	262	40	8029	6143	1.6	1.1	77.8	65.8	4759	1.0	0.8	61.0	120	1	140	FLOOR MOUNTED EXPOSED W/ SLOPED TOP
FCU-3	380	40	9747	8467	2.0	3.4	76.6	64.2	4759	1.0	0.9	63.2	120	1	140	FLOOR MOUNTED EXPOSED W/ SLOPED TOP
FCU-4	265	40	8101	6214	1.6	1.9	77.7	65.7	3552	1.0	0.9	61.6	120	1	140	FLOOR MOUNTED EXPOSED W/ SLOPED TOP
FCU-5	296	20	7150	6399	1.4	1.4	76.0	63.7	3177	1.0	0.8	64.9	120	1	140	FLOOR MOUNTED EXPOSED W/ SLOPED TOP
FCU-6	152	20	3954	3312	1.0	2.8	76.2	64.3	2591	1.0	0.8	61.9	120	1	75	FLOOR MOUNTED EXPOSED W/ SLOPED TOP
FCU-7	690	80	19425	15912	3.9	4.3	77.4	65.0	5639	1.0	1.4	62.7	120	1	265	FLOOR MOUNTED EXPOSED W/ SLOPED TOP
FCU-8	214	40	6957	5141	1.4	0.9	78.3	66.4	3552	1.0	0.8	59.4	120	1	140	FLOOR MOUNTED EXPOSED W/ SLOPED TOP
FCU-9	645	60	17391	14710	3.5	3.6	77.1	64.6	4137	1.0	1.4	63.7	120	1	265	FLOOR MOUNTED EXPOSED W/ SLOPED TOP
FCU-10	385	40	9845	8564	2.0	2.8	76.6	64.2	5671	1.0	0.9	63.2	120	1	210	FLOOR MOUNTED EXPOSED W/ SLOPED TOP
FCU-11	298	40	8839	6938	1.8	2.1	77.6	65.5	5671	1.0	0.8	61.8	120	1	140	FLOOR MOUNTED EXPOSED W/ SLOPED TOP
FCU-12	301	40	8911	7009	1.8	2.3	77.6	65.4	4463	1.0	0.9	61.9	120	1	140	FLOOR MOUNTED EXPOSED W/ SLOPED TOP
FCU-13	332	40	8835	7087	1.8	1.4	75.8	64.5	5250	1.0	0.8	62.5	120	1	180	FLOOR MOUNTED EXPOSED W/ SLOPED TOP
FCU-14	396	20	9851	8888	2.0	2.9	76.8	63.9	3938	1.0	0.9	65.7	120	1	210	FLOOR MOUNTED EXPOSED W/ SLOPED TOP
FCU-15	207	20	5662	4779	1.1	3.3	77.4	64.7	3048	1.0	0.8	63.6	120	1	110	FLOOR MOUNTED EXPOSED W/ SLOPED TOP
FCU-16	178	20	4964	4136	1.0	2.8	77.6	64.9	2477	1.0	0.8	62.8	120	1	75	FLOOR MOUNTED EXPOSED W/ SLOPED TOP
FCU-17	224	20	6052	5110	1.0	2.8	77.1	64.6	2673	1.0	0.8	63.9	120	1	110	FLOOR MOUNTED EXPOSED W/ SLOPED TOP
FCU-18	324	20	8029	7183	1.6	1.1	76.6	63.9	4155	1.0	0.8	65.1	120	1	180	FLOOR MOUNTED EXPOSED W/ SLOPED TOP
FCU-19	153	20	4206	3473	1.0	1.9	77.0	64.8	2728	1.0	0.8	62.0	120	1	80	FLOOR MOUNTED EXPOSED W/ SLOPED TOP
FCU-20	366	20	9202	8241	1.8	2.1	76.9	64.0	3177	1.0	0.8	65.5	120	1	180	FLOOR MOUNTED EXPOSED W/ SLOPED TOP
FCU-21	189	20	5209	4407	1.0	3.7	77.6	64.8	2591	1.0	0.8	63.1	120	1	75	FLOOR MOUNTED EXPOSED W/ SLOPED TOP
FCU-22	259	20	6720	5863	1.3	5.9	77.0	64.3	2344	1.0	0.8	64.4	120	1	110	FLOOR MOUNTED EXPOSED W/ SLOPED TOP

NOTE:
FAN COILS WILL BE TWO COIL UNITS FOR A FOUR PIPE SYSTEM WITH CAPACITIES BASED ON 45°F EWT (COOLING) AND 180°F EWT (HEATING). COOLING W.T.R. SHALL BE 10°F AND HEATING W.T.D. SHALL BE 20°F.

MIN. OF 1 GPM THROUGH HEATING COIL TO AVOID LAMINAR FLOW.

AIR CONTROL SCHEDULE

SYSTEM	SEPARATOR			EXPANSION TANK		REMARKS
	GPM	MPD FT	SIZE	GAL.	ACCEPTANCE VOLUME	
CHILLED WATER	67.1	0.6	3"	57	31 GALLONS	HORIZONTAL TANK
HOT WATER	48.3	0.5	2"	22	12 GALLONS	HORIZONTAL TANK

CABINET UNIT HEATER SCHEDULE

TAG	LAT	CFM	RPM	HP	MBH	GPM	MAX WPD	REMARKS
CUH-1	116	230	1050	1/10	12.8	1.3	0.52"	

NOTES:
1. UNIT ELECTRICAL CHARACTERISTICS SHALL BE 120 VOLTS, SINGLE PHASE
2. UNIT SHALL BE CONCEALED TYPE WITH END SUPPLY AND INLET DUCT CONNECTIONS
3. PROVIDE COMPLETE WITH FILTER RACK AND 1" THICK THROW-AWAY FILTER
4. BASED ON 65°F. EAT AND 180° F. EWT WATER TEMP.

AIR COOLED CHILLER SCHEDULE

TAG	TONS	GPM	EWT	LWT	WATER PD	NO COMP	EAT	KW	BLDG. SERVED
ACLC-1	22.4	67.1	53	45	9.5	2	95°	42.6	A-54

NOTES:
1. UNIT ELECTRICAL CHARACTERISTICS SHALL BE 208 VOLTS, 3 PHASE
2. UNIT SHALL HAVE MINIMUM 3 STEPS OF UNLOADING
3. PROVIDE W/COMPLETE SCREENED IN ENCLOSURE DOWN TO BASE FRAME
4. PROVIDE SEPARATE 120V, 1ø, 7AMP CONTROL CIRCUIT

HEAT EXCHANGER SCHEDULE

UNIT TAG	TYPE	SERVICE	SHELL SIDE			TUBE SIDE						REMARKS
			MEDIA	LB/HR	P.S.I.	MEDIA	GPM	EWT	LWT	FT	VEL	
HEX-1	'U'-TUBE	BLDG. HTG. SYS.	STEAM	296	12	WATER	48.1	168	180	2.0	7.11	①

① PROVIDE STAND FOR HEAT EXCHANGER (SEE DETAIL M-7).

REVISIONS				
SYM	DESCRIPTION	DATE	SATISFACTORY	APPROVED BY

DESIGN CONDITIONS

SPACE	INDOOR DESIGN		OUTDOOR DESIGN	
	°F DB	% RH	°F DB	°F WB
BERTHING (SUMMER)	76	50	91	76
BERTHING (WINTER)	68	–	22	–

PUMP SCHEDULE

TAG	TYPE	GPM	HEAD FT.	MOTOR HP	MOTOR VOLTS	MOTOR ø	RPM	REMARKS
P1	BASE MOUNTED	67.1	80.85	3	208	3	1750	
P2	BASE MOUNTED	48.3	88.9	3	208	3	1750	

FINNED TUBE RADIATION SCHEDULE

TAG	CAPAC. MBH	FINNED TUBE					ENCLOSURE			REMARKS
		LNGTH	ROWS	SIZE	EWT	LWT	LNGTH	HGT.	TYPE	
FT-1	5.5	5	2	1 1/4"	160	140	6	18"	SLOPE TOP	①②
FT-2	5.5	5	2	1 1/4"	160	140	6	18"	SLOPE TOP	①②
FT-3	5.5	5	2	1 1/4"	160	140	6	18"	SLOPE TOP	①②
FT-4	5.5	5	2	1 1/4"	160	140	6	18"	SLOPE TOP	①②
FT-5	1.2	2	2	1 1/4"	160	140	3	18"	SLOPE TOP	①②
FT-6	1.3	2	2	3/4"	160	140	3	18"	SLOPE TOP	①②
FT-7	0.6	1	2	3/4"	160	140	2	18"	SLOPE TOP	①②
FT-8	7.3	7	2	1 1/4"	160	140	8	18"	SLOPE TOP	①②
FT-9	0.6	1	2	3/4"	160	140	2	18"	SLOPE TOP	①②
FT-10	0.6	1	2	3/4"	160	140	2	18"	SLOPE TOP	①②

NOTES:
① MOUNT FIN TUBE MIN. 4" ABOVE FINISHED FLOOR.
② PROVIDE MIN. 1 GPM WATER FLOW THROUGH FINTUBE.

EXHAUST FAN SCHEDULE

TAG	TYPE	DRIVE	CFM	S.P. IN H2O	FAN R.P.M.	MAX. TIP SPD.	MOTOR DATA H.P.	MOTOR DATA R.P.M	MOTOR DATA VOLTS	REMARKS
EF-1	CEILING	DIRECT	80	.125	–	–	36W	2662	120	①
EF-2	WALL MTD. PROP.	DIRECT	225	.125	–	–	1/25	1050	120	② MOUNT @ 6'-6" A.F.F. TO BOTTOM OF FAN
EF-3	CEILING	DIRECT	85	.125	–	–	54W	1600	120	①
EF-4	CEILING	DIRECT	120	.125	–	–	1/30	1550	120	①

NOTES:
① PROVIDE CEILING CABINET FANS WITH ARCHITECTURAL STYLE GRILLE AND BACKDRAFT DAMPER.
② PROVIDE FAN WITH COMBINATION LOUVER/BACKDRAFT DAMPER TO MATCH FAN OPENING.

M-8

H.D. MANESH & ASSOC. A Professional Corporation CONSULTING ENGINEERS

COMMONWEALTH OF VIRGINIA CLAUDE V. FORD, JR. 2908 PROFESSIONAL ENGINEER

JOB ORDER NO. 9912605
DES. PAS DR. AKH CHK. CAF
BR. MGR.
SUBMITTED BY: DATE:
DAVID L. MAY, JR. 7-7-93
FIRM MEMBER / PRINCIPAL
EIC G.W. CRAGGE F.P. JOR
DIV. DIR. R.H. IVES
APPROVED: DATE:
G. SPENCE 6-25-93
SATISFACTORY TO ACTIVITY
APPROVED: DATE:
J. H. SALLEY, JR. 6-9-93
FOR C.O. FOR COMMANDER, NAVFAC

DEPARTMENT OF THE NAVY NAVAL FACILITIES ENGINEERING COMMAND
NAVY PUBLIC WORKS CENTER
NAVAL STATION NORFOLK, VIRGINIA

RENOVATE BEQ
BUILDING A-54
NAVAL STATION NORFOLK, VIRGINIA

SCHEDULES

SIZE	CODE IDENT NO.	NAVFAC DRAWING NO.	PWC DRAWING NO.
D	80091	4268913	14822AR

CONSTR. CONTR. NO. N62470-B-93-2714
SCALE: GRAPHIC SPEC. 05-93-2714 SHEET 107 OF 182

BUILDING ENERGY CONTROL SYSTEM POINT SCHEDULE

PROJECT — HARDWARE

POINT DESCRIPTION	OUTPUT (O) DIGITAL				OUTPUT (O) ANALOG				INPUT (T,D,V,C) DIGITAL						INPUT (T,D,V,C) ANALOG					
	CONTROL RELAY	MOTORIZED ACTUATOR	CONTACTOR		PNEUMATIC TRANSDUCER	ELECTRICAL TRANSDUCER	4–20MA MODULE		PRESSURE SWITCH	FLOW SWITCH	SWITCH CLOSURE	AUXILIARY CONTACT	KW	MOTION DETECTOR	TEMPERATURE	RELETIVE HUMIDITY	PSig, PSia, PSid	POSITION	FLOW	
PUMPS FLOW									●											
SPACE SENSOR														●	●					
FAN COIL SUPPLY AIR			●																	
TEMP (HS & HR)															●					
DOMESTIC HWS TEMP															●					
CHILLER TEMP (CS & CR)															●					
OUTSIDE AIR TEMPERATURE															●					
STEAM VALVE CONVERTER						●														
CHILLER	●									●										
PUMPS (HOT & CHILLED)	●																			

POINT DESCRIPTION	ALARMS DIGITAL			ALARMS ANALOG				SOFTWARE – EMCS FUNCTIONS																				
	EQUIP. STATUS	MAINTENANCE		HIGH LIMIT	LOW LIMIT	RUN TIME		SCHED. START/STOP	OPT START/STOP	DUTY CYCLING	DEMAND LIMITING	DAY/NIGHT SETBACK	ECONOMIZER	VENTILATION/RECIRCULATION	TEMPERATURE CONTROL	ENTHALPY	HOT/COLD DECK RESET	REHEAT COIL RESET	STEAM BOILER OPT.	HW BOILER OPT.	HW OA RESET	CHILLER OPT.	CHILLED WATER RESET	CONDENSER WATER RESET	CHILLER DEMAND LIMIT	VAV CONTROL	LIGHTING CONTROL	OCCUPIED/UNOCCUPIED
PUMPS FLOW															●													
SPACE SENSOR																												●
FAN COIL SUPPLY AIR																												●
TEMP (HS & HR)																												
DOMESTIC HWS TEMP																												
CHILLER TEMP (CS & CR)																												
OUTSIDE AIR TEMPERATURE																												
STEAM VALVE CONVERTER																					●							
CHILLER																						●						
PUMPS (HOT & CHILLED)																												

CHILLED WATER CONTROL SCHEMATIC

HOT WATER CONTROL SCHEMATIC

FAN COIL CONTROL SCHEMATIC

O.A. SENSOR

LOCATE SENSOR OUTSIDE MECHANICAL ROOM

3–PHASE, 1–SPEED MOTOR SCHEMATIC

CONTROL DIAGRAMS

NO SCALE

SEQUENCE OF CONTROLS

HOT AND CHILLED WATER SYSTEM

A TERMINAL CONTROL UNIT (TCU) SHALL OPERATE THE COMPONENTS OF THE CHILLED AND HOT WATER SYSTEM. THIS INCLUDES THE CHILLER, HEAT EXCHANGER, FAN COIL UNITS AND PUMPS. THE SYSTEM WILL BE OPERATED ACCORDING TO OUTDOOR AIR TEMPERATURE.

COOLING MODE

ON SIGNAL FROM THE EMCS, THE CHILLED WATER PUMP SHALL ENERGIZE WHEN OUTSIDE AIR TEMPERATURE IS ABOVE 65°F. ONCE WATER FLOW IS PROVED THROUGH THE CHILLER, THE CHILLER SHALL BE ENERGIZED. THE CHILLED WATER TEMPERATURE AND THE STAGING OF THE CHILLER COMPRESSOR WILL BE CONTROLLED BY THE CHILLER'S FACTORY CONTROLS. ON A DROP IN OUTDOOR AIR TEMPERATURE TO BELOW 60°F., THE REVERSE SHALL OCCUR.

HEATING MODE

ON A SIGNAL FROM THE EMCS, THE HOT WATER PUMP SHALL ENERGIZE. ONCE WATER FLOW IS PROVEN THROUGH THE HEAT EXCHANGER, THE STEAM CONTROL VALVE SHALL BE MODULATED OPEN TO MAINTAIN A CONSTANT LEAVING WATER TEMPERATURE ACCORDING TO THE FOLLOWING SCHEDULE:

OUTSIDE AIR TEMPERATURE	HOT WATER TEMPERATURE
50	90
30	120
22	180

ON A RISE IN OUTSIDE AIR TEMPERATURE, THE REVERSE SHALL OCCUR.

PUMPS P–1 & P–2

A HAND–OFF– AUTOMATIC SWITCH SHALL CONTROL THE PUMP. IF THE SWITCH IS IN THE ON POSITION THE PUMP SHALL OPERATE. IF THE SWITCH IS IN THE OFF POSITION THE PUMP SHALL BE DE–ENGERIZED. IF THE SWITCH IS IN THE AUTO POSITION THE TERMINAL CONTROL UNIT SHALL CONTROL THE OPERATION.

FAN COIL UNITS

A COMBINATION OF FACTORY CONTROLS AND THE INTEGRATED TERMINAL CONTROL UNIT (TCU) SHALL OPERATE THE COMPONENTS OF THE FAN COIL UNITS. THIS INCLUDES THE SUPPLY AIR FAN AND THE WATER CONTROL VALVE. THE FAN SHALL OPERATE IN ACCORDANCE WITH THE MANUAL CONTROL SWITCH. THE SPACE TEMPERATURE SHALL OPERATE IN ACCORDANCE WITH THE ROOM TEMPERATURE AND MOTION DETECTOR. IF SPACE IS OCCUPIED, THE SPACE TEMPERATURE IS CONTROLLED BY THE INTEGRAL FACTORY THERMOSTAT. IF THE SPACE IS UNOCCUPIED, THE SPACE TEMPERATURE IS CONTROLLED BY THE TERMINAL CONTROL UNIT AND IN ACCORDANCE WITH THE FOLLOWING SCHEDULE:
UNOCCUPIED
HEATING SETPOINT 65°F. (ADJUSTABLE)
COOLING SETPOINT 80°F. (ADJUSTABLE)

EXHAUST FANS:

TOILET EXHAUST FAN SHALL BE CONTROLLED BY THEIR RESPECTIVE LIGHT SWITCH.

LAUNDRY EXHAUST FANS SHALL BE CONTROLLED BY A SEPERATE WALL SWITCH.

TERMINAL CONTROL UNIT DIAGRAM

REVISIONS				
SYM	DESCRIPTION	DATE	SATISFACTORY	APPROVED BY

CONTROL DIAGRAM LEGEND

- AI — ANALOG INPUT
- AO — ANALOG OUTPUT
- DI — DIGITAL INPUT
- DO — DIGITAL OUTPUT
- T — TEMPERATURE SENSOR
- WELL FOR TEMPERATURE SENSOR
- M — MOTORIZED VALVE
- R — CONTROL RELAY
- MD — MOTION DETECTOR
- DP — DIFFERENTIAL PRESSURE TRENSDUCER
- MS — MOTOR STARTER

M–9

H.D. MANESH & ASSOC.
A Professional Corporation
CONSULTING ENGINEERS

JOB ORDER NO. 9912605
DES. RT | DR. AKH | CHK. CAF
BR. MGR.
SUBMITTED BY: DAVID L. MAY, JR. DATE: 7-7-93
FIRM MEMBER / PRINCIPAL
EIC G.W. CRABBE F.P.JOR
DIV. DIR. R.H. IVES
APPROVED: G. SPENCE DATE: 6-25-93
SATISFACTORY TO ACTIVITY
APPROVED: J. H. SALLEY, JR. DATE: 6-9-93
FOR C.O. FOR COMMANDER, NAVFAC

DEPARTMENT OF THE NAVY — NAVAL FACILITIES ENGINEERING COMMAND
NAVY PUBLIC WORKS CENTER
NAVAL STATION — NORFOLK, VIRGINIA

RENOVATE BEQ
BUILDING A–54
NAVAL STATION — NORFOLK, VIRGINIA

CONTROL DIAGRAMS

SIZE	CODE IDENT NO.	NAVFAC DRAWING NO.	PWC DRAWING NO.
D	80091	4268914	14822AS
		CONSTR. CONTR. NO. N62470–B–93–2714	
SCALE: GRAPHIC		SPEC. 05–93–2714	SHEET 108 OF 182

C-9 Record Drawings

MECHANICAL LEGEND

- REMOVE EQUIPMENT, DUCTWORK AND PIPING
- —HPS— HIGH PRESSURE STEAM PIPING
- —LPS— LOW PRESSURE STEAM PIPING
- --LPR-- LOW PRESSURE CONDENSATE RETURN PIPING
- CONDENSATE TRAP ASSEMBLY
- —HWS— HOT WATER SUPPLY PIPING
- —HWR— HOT WATER RETURN PIPING
- —CHS— CHILLED WATER SUPPLY PIPING
- —CHR— CHILLED WATER RETURN PIPING
- — RL— REFRIGERANT LIQUID PIPING
- — RS— REFRIGERANT SUCTION PIPING
- — D— CONDENSATE DRAIN PIPING
- — CW— DOMESTIC COLD WATER
- BACKFLOW PREVENTER
- BALANCING VALVE
- GATE VALVE
- CHECK VALVE
- BUTTERFLY VALVE
- SUPPLY DUCT SECTION
- RETURN OR EXHAUST DUCT SECTION
- SA SUPPLY AIR
- RA RETURN AIR
- OA OUTSIDE AIR
- CD CEILING DIFFUSER
- H&C HEATING AND COOLING THERMOSTAT, MOUNT 60" ABOVE FLOOR
- ELBOW WITH TURNING VANES
- BD MANUAL BALANCING DAMPER W/LOCKING QUADRANT
- FLEXIBLE DUCT CONNECTION
- UC UNDER CUT DOOR MIN. 1"
- STRAINER WITH BLOWDOWN VALVE
- 3-WAY AUTO CONTROL VALVE
- PRESSURE REDUCING VALVE
- 2-WAY AUTO CONTROL VALVE
- THERMOMETER
- FLEXIBLE PIPING CONNECTION
- PRESSURE GAUGE SHUT-OFF COCK
- AUTOMATIC AIR VENT
- UNION
- PIPE SLOPE (DOWN IN ARROW DIRECTION)
- FLOW CONTROL BALANCING VALVE W/PRESSURE TAPS (GPM NOTED)
- CIRCUIT SENSOR WITH PRESSURE TAPS
- RELIEF VALVE
- ECCENTRIC PIPE REDUCER
- PIPE CAP
- PIPE TURNED UP
- DIRECTION OF FLOW
- THERMOMETER WELL
- PIPE TURNED DOWN
- A PIPE ANCHOR
- A/100 GRILLE OR DIFFUSER MARK - SEE SCHEDULE OR SPECIFICATION (CFM NOTED)
- M MOTORIZED CONTROL DAMPER
- POINT OF DEMOLITION TERMINATION
- POINT OF CONNECTION-NEW TO EXISTING
- DUCT SMOKE DETECTOR
- P-1 PUMP MARK-SEE SCHEDULE
- SPIN IN CONNECTION WITH BALANCING DAMPER AND FLEX DUCT
- BASKET STRAINER

MECHANICAL ABBREVIATIONS

A/C	AIR CONDITIONING
ACC	AIR COOLED CONDENSER
ACCU	AIR COOLED CONDENSING UNIT
AFF	ABOVE FINISHED FLOOR
AFG	ABOVE FINISHED GRADE
AHU	AIR HANDLING UNIT
APD	AIR PRESSURE DROP
BD	BALANCING DAMPER
BDD	BACK DRAFT DAMPER
BTUH	BRITISH THERMAL UNITS PER POUND
CD	CEILING DIFFUSER
CFM	CUBIC FEET PER MINUTE
DN	DOWN
DPR	DAMPER
EAT	ENTERING AIR TEMPERATURE
EDB	ENTERING DRY BULB
EWT	ENTERING WATER TEMPERATURE
EWB	ENTERING WET BULB
ESP	EXTERNAL STATIC PRESSURE
EXIST	EXISTING
FF	FINISHED FLOOR
FPM	FEET PER MINUTE
HP	HORSE POWER
KW	KILOWATT
LAT	LEAVING AIR TEMPERARURE
LB/HR	POUND PER HOUR
LWB	LEAVING WET BULB
LWT	LEAVING WATER TEMPERTURE
MAX	MAXIMUM
MBH	THOUSAND BTUH
OA	OUTSIDE AIR
PD	PRESSURE DROP
PSIG	POUNDS PER SQUARE INCH GAGE
RA	RETURN AIR
SA	SUPPLY AIR
SP	STATIC PRESSURE
SR	SUPPLY REGISTER
T'STAT	THERMOSTAT
TYP	TYPICAL
"WC	INCHES WATER COLUMN
WPD	WATER PRESSURE DROP
Φ	PHASE

REVISIONS				
SYM	DESCRIPTION	DATE	SATISFACTORY	APPROVED BY

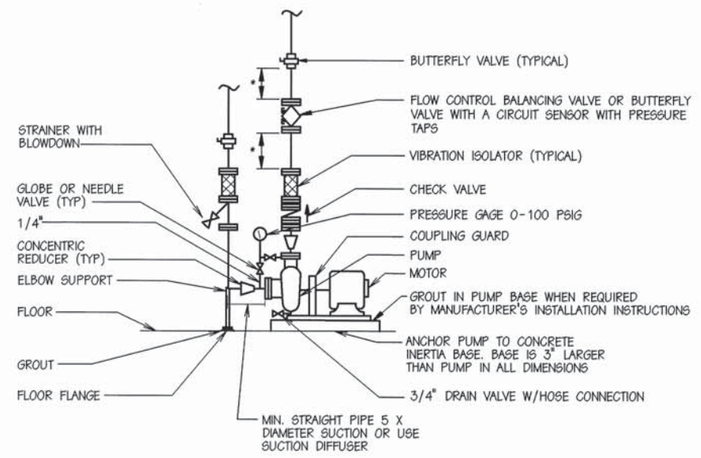

* STRAIGHT LENGTHS OF UNOBSTRRUCTED PIPE WITHOUT INLINE APPURTENANCES SHALL BE INSTALLED UP/DOWNSTREAM OF FLOW CONTROL BALANCING VALVE PER MFGR'S INSTALLATION INSTRUCTIONS

BASE MOUNTED CENTRIFUGAL PUMP

NO SCALE

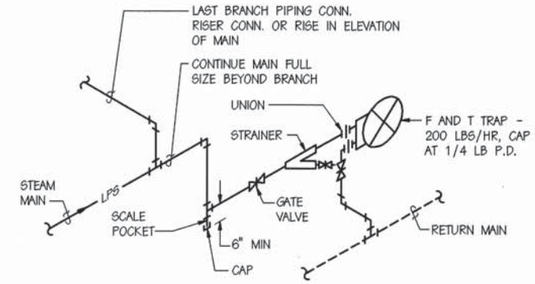

LOW PRESSURE END OF MAIN DRIP DETAIL

NO SCALE

Bowman, Foster & Associates, P.C.
Consulting Engineers
192 Ballard Court, Suite 200
Virginia Beach, VA 23462

COMMONWEALTH OF VIRGINIA — Foster — 10316 — PROFESSIONAL ENGINEER

M-1

DEPARTMENT OF THE NAVY NAVAL FACILITIES ENGINEERING COMMAND
NAVY PUBLIC WORKS CENTER
NAVAL STATION NORFOLK, VIRGINIA

NAVAL STATION, NORFOLK, VIRGINIA

RENOVATION OF HVAC SYSTEMS; BUILDING C-9

LEGEND, ABBREVIATIONS, NOTES & DETAILS

JOB ORDER NO. 1325034
DES. RMK | DR. CAD | CHK. BDW
BR. MGR. RDF
SUBMITTED BY: FIRM MEMBER / PRINCIPAL
EIC S. KATEPALLI, P.E.
DIV. DIR. R.H. IVES JR., P.E.
APPROVED: DATE: 6/28/95 SATISFACTORY TO ACTIVITY
APPROVED: DATE: 6/30/95 FOR C.O. COMMANDER, NAVFAC

SIZE	CODE ID NO.	NAVFAC DRAWING NO.	PWC DRAWING NO.
D	80091	4,306,012	15271-F
		CONSTR. CONTR. NO.	N62470-93-C-5445
SCALE: NOTED		SPEC. 05-95-2986	SHEET 7 OF 40

8 7 6 5 4 3 2 1

REVISIONS				
SYM	DESCRIPTION	DATE	SATISFACTORY	APPROVED BY

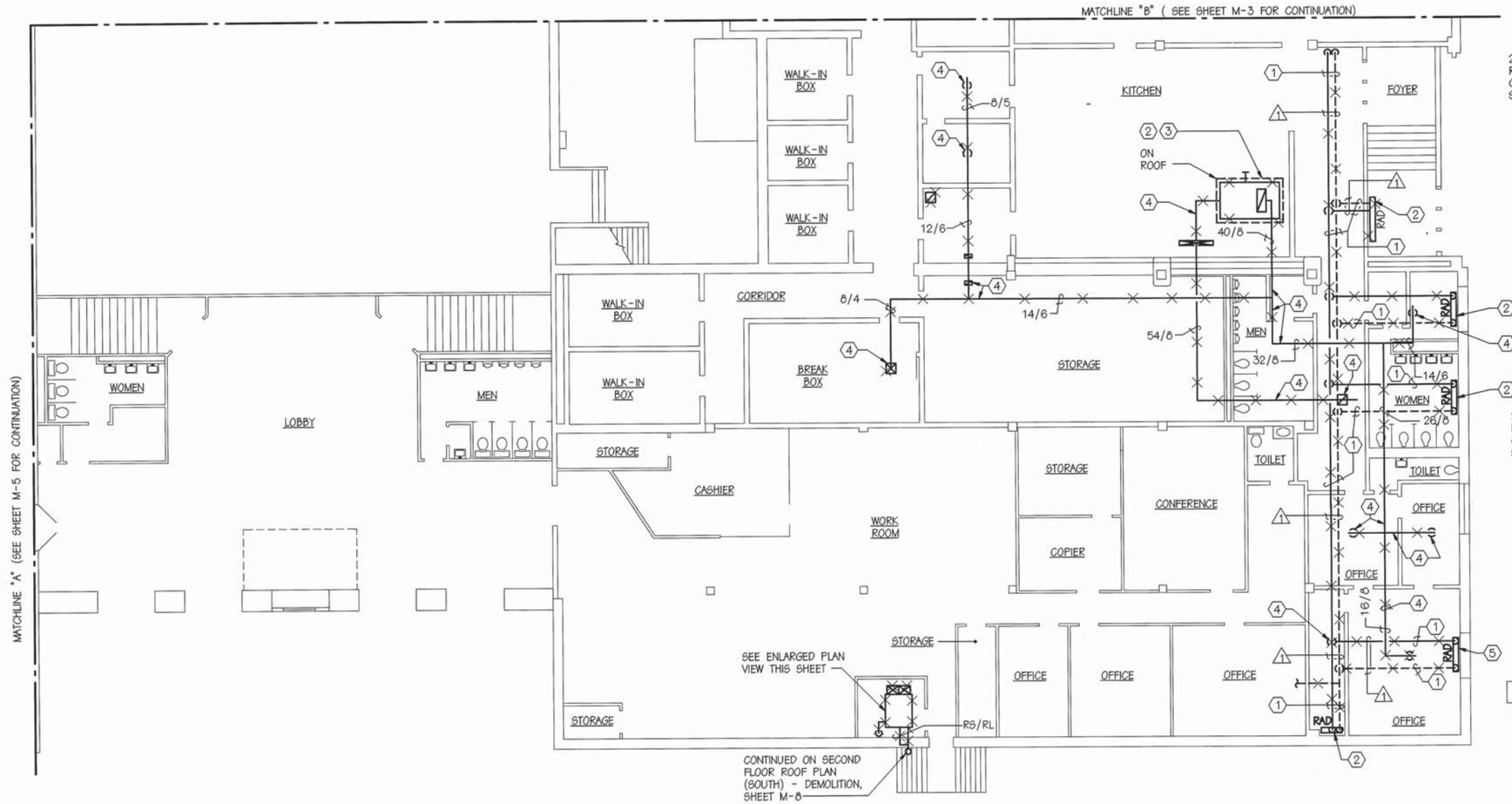

FIRST FLOOR PART PLAN - DEMOLITION

SCALE: 1/8" = 1'-0"

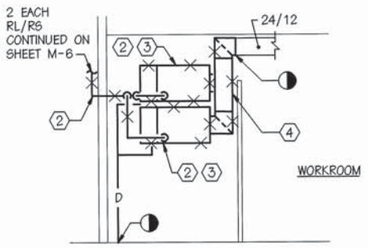

ENLARGED PLAN VIEW

SCALE: 1/4" = 1'-0"

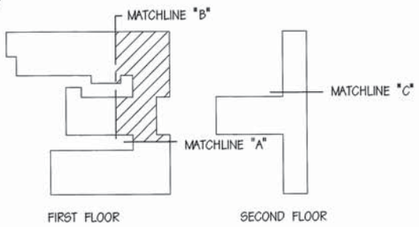

KEY PLAN

NOT TO SCALE

ASBESTOS NOTE (THIS SHEET ONLY)

⚠1 PIPE INSULATION IS CONSIDERED ASBESTOS CONTAINED MATERIAL AND SHALL UNDER GO COMPLETE ABAITMENT PER SPECIFICATION SECTION 02081 "ASBESTOS REMOVAL" PRIOR TO ANY DEMOLITION.

DEMOLITION NOTES (THIS SHEET ONLY)

(1) REMOVE STEAM AND CONDENSATE PIPING TO THE LIMITS MARKED.

(2) REMOVE HEATING AND COOLING EQUIPMENT, INCLUDING CONTROLS AND ASSOCIATED PIPING.

(3) A SAMPLE OF THE REFRIGERANT/OIL SHALL BE TAKEN FROM THE EXISTING SYSTEM AND ANALYZED. THE RESULTS OF THE ANALYSIS SHALL BE TURNED OVER TO THE GOVERNMENT. THE REFRIGERANT SHALL BE RECOVERED AND TURNED OVER TO THE GOVERNMENT.

(4) REMOVE DUCTWORK, ASSOCIATED HARDWARE AND DEVICES TO THE LIMITS MARKED.

(5) EXISTING HEATING AND COOLING EQUIPMENT TO BE ABANDONED IN PLACE, REMOVE ALL ASSOCIATED CONTROLS AND PIPING.

GRAPHIC SCALE:

1/4" = 1'-0" 5' 0' 5' 10'

1/8" = 1'-0" 10' 5' 0' 10' 20'

Bowman, Foster & Associates, P.C.
Consulting Engineers
192 Ballard Court, Suite 200
Virginia Beach, VA 23462

COMMONWEALTH OF VIRGINIA
R. D. Foster
10316
PROFESSIONAL ENGINEER

M-2

DEPARTMENT OF THE NAVY NAVAL FACILITIES ENGINEERING COMMAND
NAVY PUBLIC WORKS CENTER
NAVAL STATION NORFOLK, VIRGINIA

NAVAL STATION, NORFOLK, VIRGINIA

RENOVATION OF HVAC SYSTEMS; BUILDING C-9

FIRST FLOOR PART PLAN - DEMOLITION

JOB ORDER NO. 1325034			
DES. RMK | DR. CAD | CHK. BDW			
BR. MGR. RDF			
SUBMITTED BY: R. D. Foster			
FIRM MEMBER / PRINCIPAL			
EIC S. KATEPALLI, P.E.			
DIV. DIR. R.H. IVES JR., P.E.			
APPROVED: DATE: 12/95	SIZE	CODE ID NO.	NAVFAC DRAWING NO. / PWC DRAWING NO.
SATISFACTORY TO ACTIVITY	D	80091	4,306,013 / 15271-G
APPROVED: DATE: 12/95			CONSTR. CONTR. NO. N62470-93-C-5445
FOR C.O. COMMANDER, NAVFAC	SCALE: NOTED		SPEC. 05-95-2986 / SHEET 8 OF 40

8 7 6 5 4 3 2 1

D C B A

REVISIONS				
SYM	DESCRIPTION	DATE	SATISFACTORY	APPROVED BY

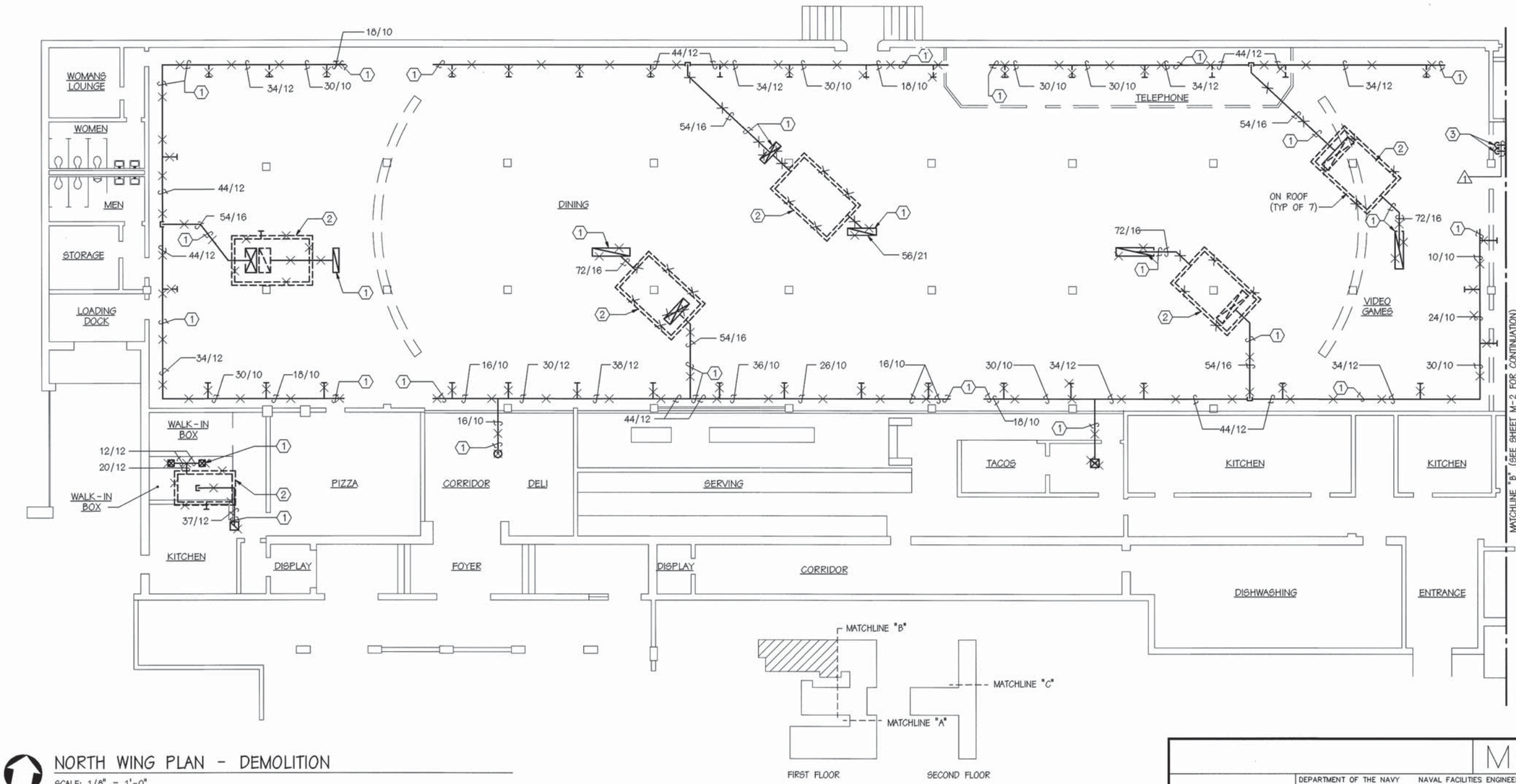

NORTH WING PLAN - DEMOLITION

SCALE: 1/8" = 1'-0"

KEY PLAN

NOT TO SCALE

GRAPHIC SCALE:

1/8" = 1'-0" 10' 5' 0' 10' 20'

ASBESTOS NOTE (THIS SHEET ONLY)

⚠1 PIPE INSULATION IS CONSIDERED ASBESTOS CONTAINED MATERIAL AND SHALL UNDER GO COMPLETE ABAITMENT PER SPECIFICATION SECTION 02061 "ASBESTOS REMOVAL" PRIOR TO ANY DEMOLITION.

DEMOLITION NOTES (THIS SHEET ONLY)

(1) REMOVE DUCTWORK, INSULATION, HANGERS AND DIVICES AS INDICATED.

(2) FOR EQUIPMENT REMOVEAL SEE SHEET M-4.

(3) REMOVE STEAM AND CONDENSATE PIPE TO FINISHED FLOOR AND CAP REMAINING PIPE.

Bowman, Foster & Associates, P.C.
Consulting Engineers
192 Ballard Court, Suite 200
Virginia Beach, VA 23462

COMMONWEALTH OF VIRGINIA R. D. Foster 10376 PROFESSIONAL ENGINEER

M-3

DEPARTMENT OF THE NAVY NAVAL FACILITIES ENGINEERING COMMAND
NAVY PUBLIC WORKS CENTER
NAVAL STATION NORFOLK, VIRGINIA

NAVAL STATION, NORFOLK, VIRGINIA

RENOVATION OF HVAC SYSTEMS; BUILDING C-9

NORTH WING PLAN - DEMOLITION

JOB ORDER NO. 1325034	
DES. RMK | DR. CAD | CHK. BDW	
BR. MGR. RDF	
SUBMITTED BY:	
FIRM MEMBER / PRINCIPAL	
EIC S. KATEPALLI, P.E.	
DIV. DIR. R.H. IVES JR., P.E.	
APPROVED: DATE:	
SATISFACTORY TO ACTIVITY	
APPROVED: DATE: 4/30/96	
FOR C.O. COMMANDER, NAVFAC	

SIZE	CODE ID NO.	NAVFAC DRAWING NO.	PWC DRAWING NO.
D	80091	4,306,016	15271-H
		CONSTR. CONTR. NO.	N62470-93-C-5445
SCALE: NOTED		SPEC. 05-95-2986	SHEET 9 OF 40

8 7 6 5 4 3 2 1

D C B A

REVISIONS				
SYM	DESCRIPTION	DATE	SATISFACTORY	APPROVED BY

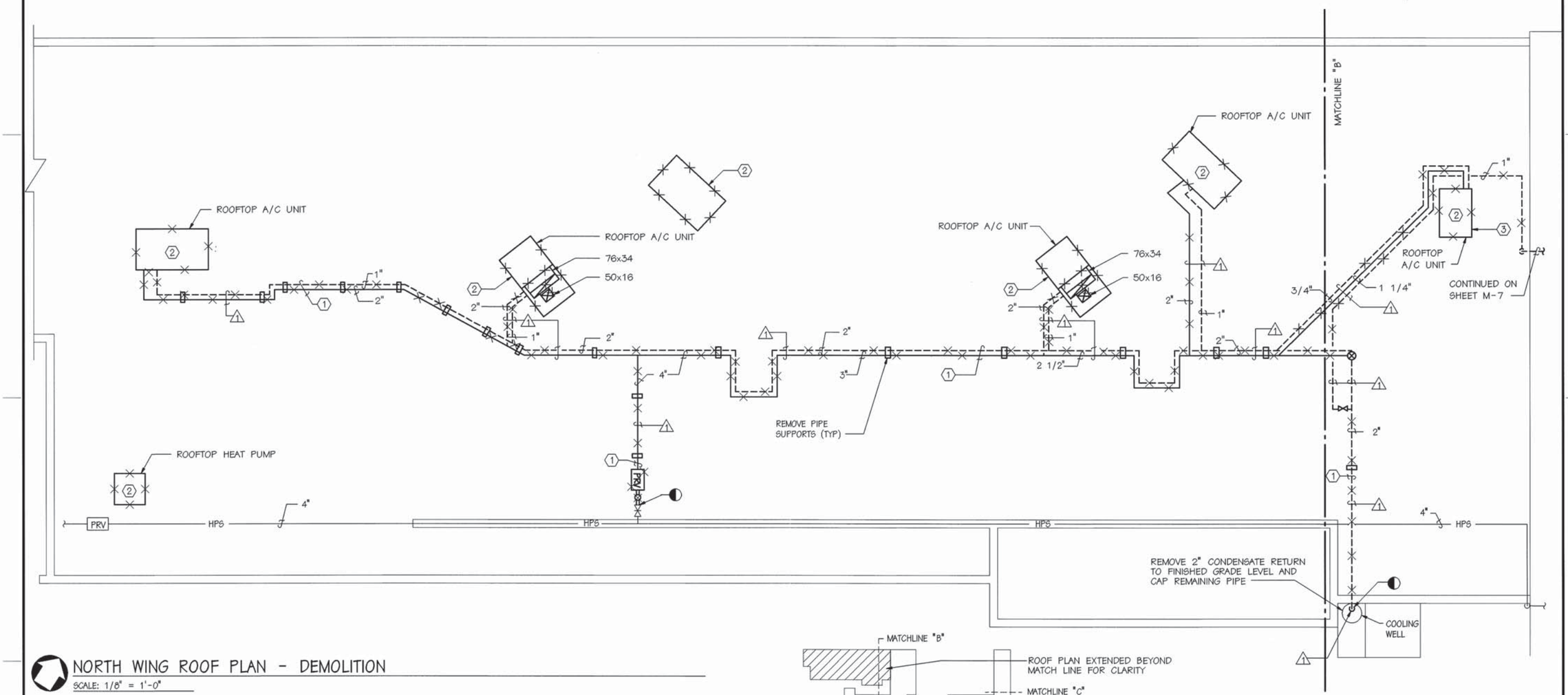

NORTH WING ROOF PLAN - DEMOLITION

SCALE: 1/8" = 1'-0"

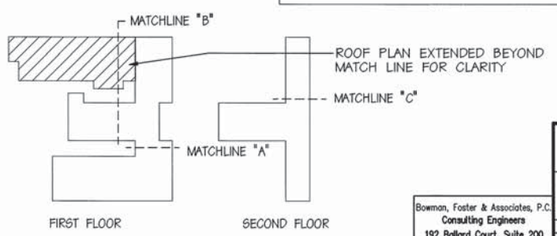

KEY PLAN

NOT TO SCALE

ASBESTOS NOTE (THIS SHEET ONLY)

⚠1 PIPE INSULATION IS CONSIDERED ASBESTOS CONTAINED MATERIAL AND SHALL UNDER GO COMPLETE ABAITMENT PER SPECIFICATION SECTION 02081 "ASBESTOS REMOVAL" PRIOR TO ANY DEMOLITION.

DEMOLTION NOTES (THIS SHEET ONLY)

(1) REMOVE STEAM AND CONDENSATE PIPING, VALVES, SUPPORTS AND CONTROLS TO THE LIMITS MARKED.

(2) REMOVE HEATING AND COOLING EQUIPMENT INCLUDING CONTROLS, DUCTWORK AND MOUNTING CURB.

(3) BLANK-OFF REMAINING ROOF OPENING.

(4) REMOVE ABANDONED ROOF CURB AND DUCTWORK.

GRAPHIC SCALE:

1/8" = 1'-0" 10' 5' 0' 10' 20'

Bowman, Foster & Associates, P.C.
Consulting Engineers
192 Ballard Court, Suite 200
Virginia Beach, VA 23462

COMMONWEALTH OF VIRGINIA
B. D. Foster
10316
PROFESSIONAL ENGINEER

M-4

DEPARTMENT OF THE NAVY NAVAL FACILITIES ENGINEERING COMMAND
NAVY PUBLIC WORKS CENTER
NAVAL STATION NORFOLK, VIRGINIA

NAVAL STATION, NORFOLK, VIRGINIA

RENOVATION OF HVAC SYSTEMS; BUILDING C-9

NORTH WING ROOF PLAN - DEMOLITION

JOB ORDER NO.	1325034
DES. RMK | DR. CAD | CHK. BDW	
BR. MGR.	RDF
SUBMITTED BY	
FIRM MEMBER / PRINCIPAL	
EIC	S. KATEPALLI, P.E.
DIV. DIR.	R.H. IVES JR., P.E.
APPROVED:	DATE: 10/25/95
SATISFACTORY TO ACTIVITY	
APPROVED:	DATE: 10/25/95
FOR C.O. COMMANDER, NAVFAC	

SIZE	CODE ID NO.	NAVFAC DRAWING NO.	PWC DRAWING NO.
D	80091	4,306,015	15271-1
		CONSTR. CONTR. NO.	N62470-93-C-5445
SCALE: NOTED		SPEC. 05-95-2986	SHEET 10 OF 40

8 7 6 5 4 3 2 1

D C B A

DEMOLITION NOTES (THIS SHEET ONLY)

1. REMOVE STEAM AND CONDENSATE PIPING TO THE LIMITS MARKED AND CAP REMAINING PIPING.
2. REMOVE HEATING AND COOLING EQUIPMENT, INCLUDING CONTROLS AND ASSOCIATED PIPING.
3. A SAMPLE OF THE REFRIGERANT/OIL SHALL BE TAKEN FROM THE EXISTING SYSTEM AND ANALYZED. THE RESULTS OF THE ANALYSIS SHALL BE TURNED OVER TO THE GOVERNMENT. THE REFRIGERANT SHALL BE RECOVERED AND TURNED OVER TO THE GOVERNMENT.
4. REMOVE HEATING & COOLING EQUIPMENT INCLUDING CONTROLS. EXERCISE CARE TO PREVENT DAMAGE TO EQUIPMENT. TURN EQUIPMENT OVER TO GOVERNMENT AS INSTRUCTED.
5. REMOVE DUCTWORK, ASSOCIATED HARDWARE AND DEVICES TO THE LIMITS MARKED.

REVISIONS				
SYM	DESCRIPTION	DATE	SATISFACTORY	APPROVED BY

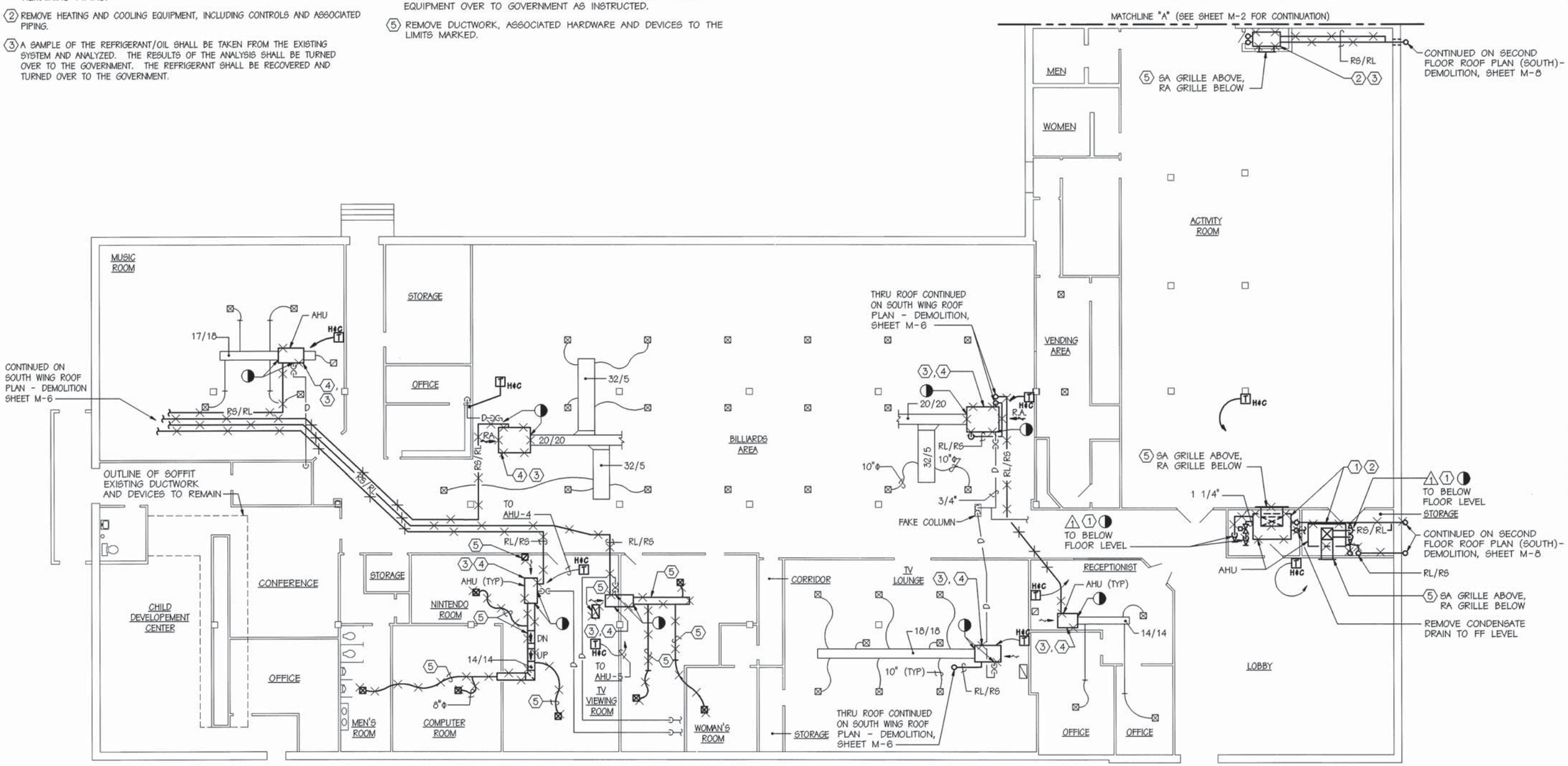

SOUTH WING PLAN - DEMOLITION
SCALE: 1/8" = 1'-0"

ASBESTOS NOTE (THIS SHEET ONLY)

⚠ PIPE INSULATION IS CONSIDERED ASBESTOS CONTAINED MATERIAL AND SHALL UNDER GO COMPLETE ABAITMENT PER SPECIFICATION SECTION 02081 "ASBESTOS REMOVAL" PRIOR TO ANY DEMOLITION.

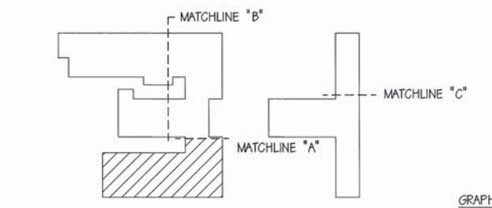

KEY PLAN
NOT TO SCALE

GRAPHIC SCALE:
1/8" = 1'-0" 10' 5' 0' 10' 20'

Bowman, Foster & Associates, P.C.
Consulting Engineers
192 Ballard Court, Suite 200
Virginia Beach, VA 23462

COMMONWEALTH OF VIRGINIA — D. P. Foster — 10316 — PROFESSIONAL ENGINEER

M-5

DEPARTMENT OF THE NAVY NAVAL FACILITIES ENGINEERING COMMAND
NAVY PUBLIC WORKS CENTER
NAVAL STATION NORFOLK, VIRGINIA

NAVAL STATION, NORFOLK, VIRGINIA

RENOVATION OF HVAC SYSTEMS; BUILDING C-9

SOUTH WING PLAN - DEMOLITION

JOB ORDER NO. 1325034		
DES. RMK	DR. CAD	CHK. BDW
BR. MGR. RDF		
SUBMITTED BY:		
FIRM MEMBER / PRINCIPAL		
EIC S. KATEPALLI, P.E.		
DIV. DIR. R.H. IVES JR., P.E.		
APPROVED:	DATE: 6/30/95	
SATISFACTORY TO ACTIVITY		
APPROVED:	DATE: 6/30/95	
FOR C.O. COMMANDER, NAVFAC		

SIZE	CODE ID NO.	NAVFAC DRAWING NO.	PWC DRAWING NO.
D	80091	4,306,016	15271-J
		CONSTR. CONTR. NO. N62470-93-C-5445	
SCALE: NOTED		SPEC. 05-95-2986	SHEET 11 OF 40

8 7 6 5 4 3 2 1

REVISIONS				
SYM	DESCRIPTION	DATE	SATISFACTORY	APPROVED BY

ASBESTOS NOTE (THIS SHEET ONLY)

⚠1 PIPE INSULATION IS CONSIDERED ASBESTOS CONTAINED MATERIAL AND SHALL UNDER GO COMPLETE ABAITMENT PER SPECIFICATION SECTION 02081 "ASBESTOS REMOVAL" PRIOR TO ANY DEMOLITION.

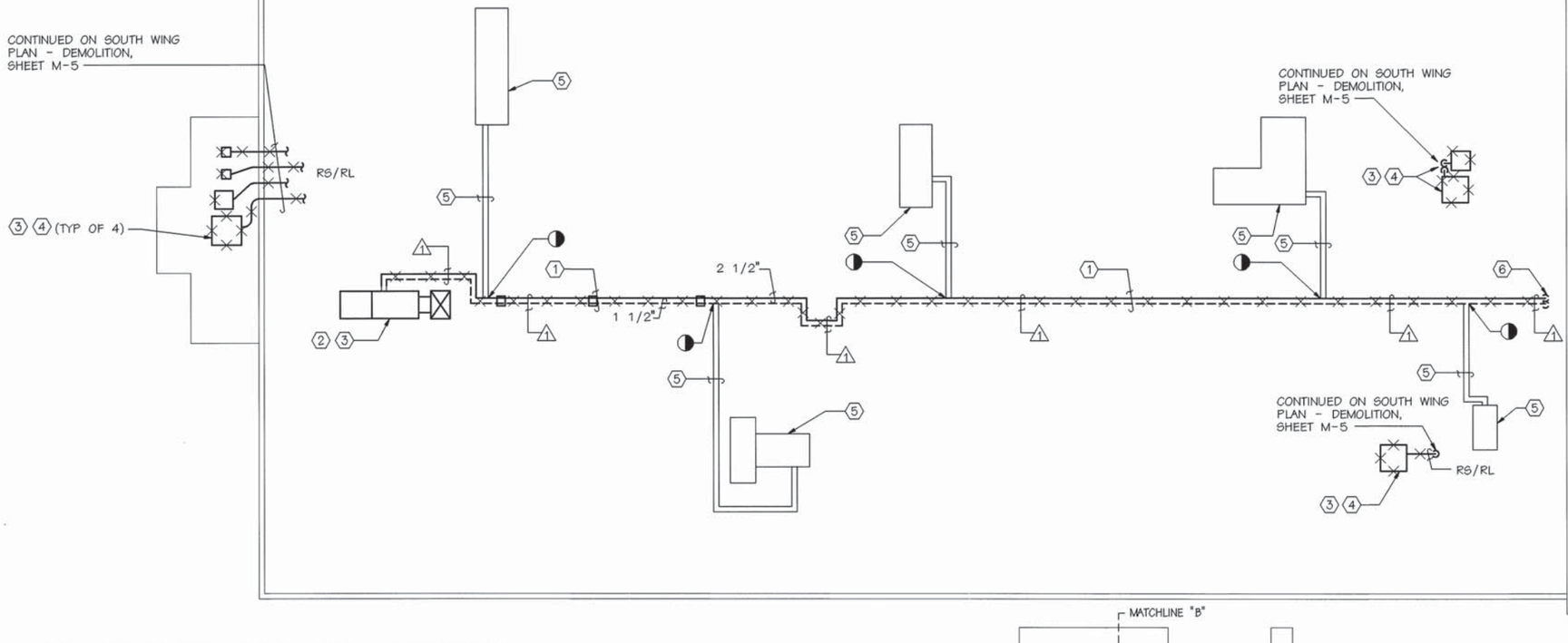

SOUTH WING ROOF PLAN - DEMOLITION

SCALE: 1/8" = 1'-0"

DEMOLITION NOTES (THIS SHEET ONLY)

1. REMOVE STEAM AND CONDENSATE PIPING, VALVES AND CONTROLS THE LIMITS MARKED.
2. REMOVE HEATING AND COOLING EQUIPMENT, INCLUDING CONTROLS AND ASSOCIATED PIPING.
3. A SAMPLE OF THE REFRIGERANT/OIL SHALL BE TAKEN FROM THE EXISTING SYSTEM AND ANALYZED. THE RESULTS OF THE ANALYSIS SHALL BE TURNED OVER TO THE GOVERNMENT. THE REFRIGERANT SHALL BE RECOVERED AND TURNED OVER TO THE GOVERNMENT.
4. REMOVE HEATING & COOLING EQUIPMENT. EXERCISE CARE TO PREVENT DAMAGE TO EQUIPMENT. TURN EQUIPMENT OVER TO GOVERNMENT AS INSTRUCTED.
5. ABANDONED EQUIPMENT, DUCTWORK & PIPING TO BE REMOVED BY ROOFING CONTRACTOR UNDER SEPARATE CONTRACT.
6. REMOVE STEAM AND CONDENSATE PIPING TO BELOW ROOF CAP REMAINING PIPING AND ABANDON IN PLACE.

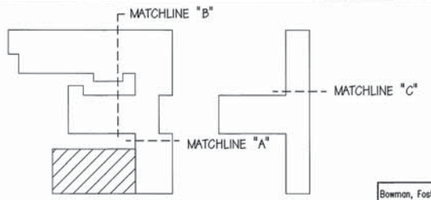

KEY PLAN

NOT TO SCALE

GRAPHIC SCALE:

1/8" = 1'-0" 10' 5' 0' 10' 20'

Bowman, Foster & Associates, P.C.
Consulting Engineers
192 Ballard Court, Suite 200
Virginia Beach, VA 23462

COMMONWEALTH OF VIRGINIA R. D. Foster 10316 PROFESSIONAL ENGINEER

M-6

DEPARTMENT OF THE NAVY NAVAL FACILITIES ENGINEERING COMMAND
NAVY PUBLIC WORKS CENTER
NAVAL STATION NORFOLK, VIRGINIA

NAVAL STATION, NORFOLK, VIRGINIA

RENOVATION OF HVAC SYSTEMS; BUILDING C-9

SOUTH WING ROOF PLAN - DEMOLITION

JOB ORDER NO. 1325034			
DES. RMK | DR. CAD | CHK. BDW			
BR. MGR. RDF			
SUBMITTED BY: FIRM MEMBER / PRINCIPAL			
EIC S. KATEPALLI, P.E.			
DIV. DIR. R.H. IVES JR., P.E.			
APPROVED: DATE: SATISFACTORY TO ACTIVITY			
APPROVED: DATE: 6/30/95 FOR C.O. COMMANDER, NAVFAC			
SIZE D	CODE ID NO. 80091	NAVFAC DRAWING NO. 4,306,017	PWC DRAWING NO. 15271-K
SCALE: NOTED	SPEC. 05-95-2986	CONSTR. CONTR. NO. N26470-93-C-5445	SHEET 12 OF 40

8 7 6 5 4 3 2 1

D C B A

REVISIONS				
SYM	DESCRIPTION	DATE	SATISFACTORY	APPROVED BY

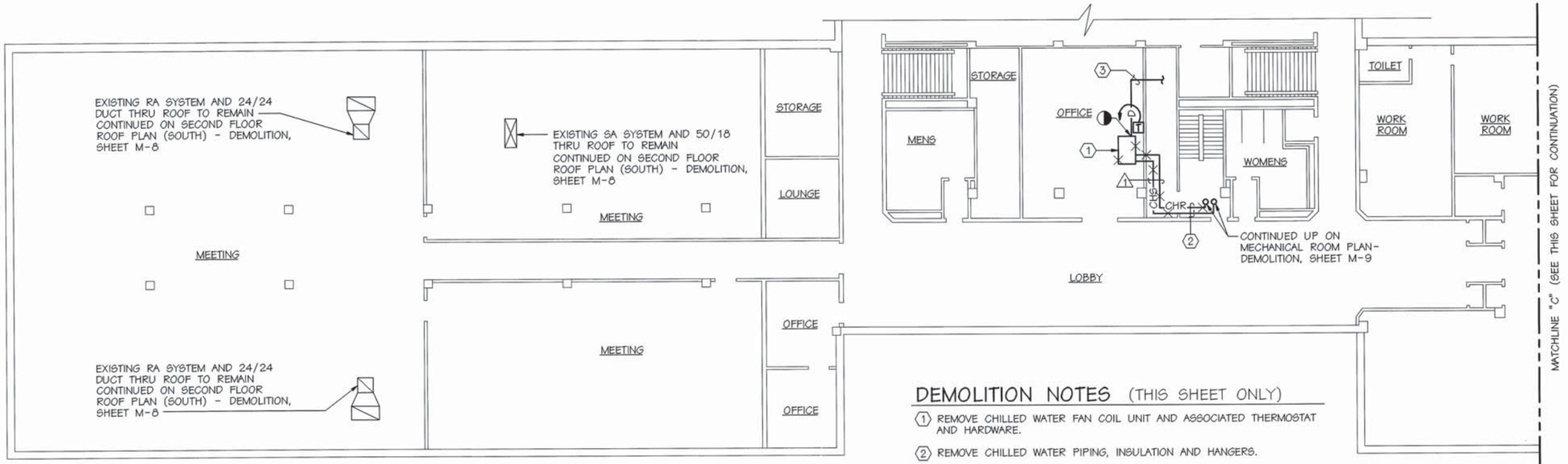

DEMOLITION NOTES (THIS SHEET ONLY)

(1) REMOVE CHILLED WATER FAN COIL UNIT AND ASSOCIATED THERMOSTAT AND HARDWARE.

(2) REMOVE CHILLED WATER PIPING, INSULATION AND HANGERS.

(3) 3/4" CONDESATE DRAIN SHALL REMAIN FOR REUSE.

SECOND FLOOR PLAN (SOUTH) - DEMOLITION

SCALE: 1/8" = 1'-0"

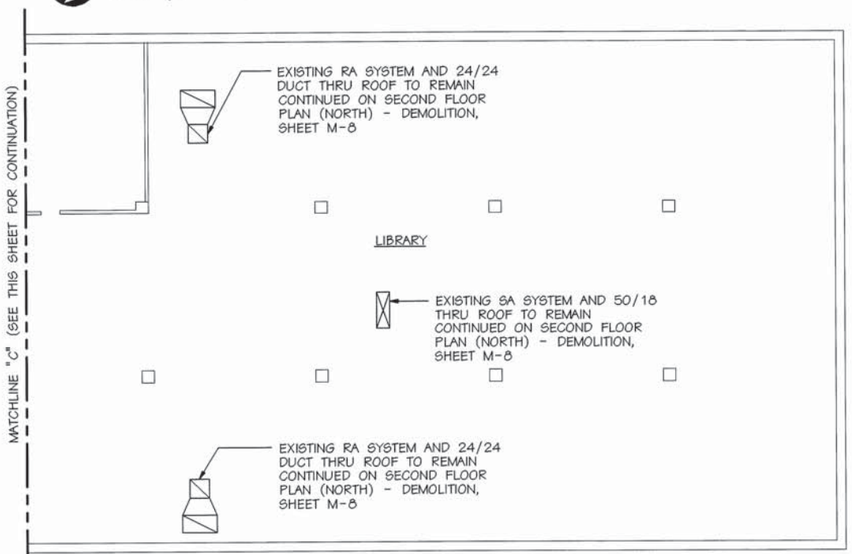

SECOND FLOOR PLAN (NORTH) - DEMOLITION

SCALE: 1/8" = 1'-0"

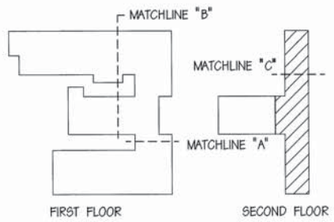

KEY PLAN

NOT TO SCALE

ASBESTOS NOTE (THIS SHEET ONLY)

(1) PIPE INSULATION IS CONSIDERED ASBESTOS CONTAINED MATERIAL AND SHALL UNDER GO COMPLETE ABATMENT PER SPECIFICATION SECTION 02081 "ASBESTOS REMOVAL" PRIOR TO ANY DEMOLITION.

GRAPHIC SCALE:

1/8" = 1'-0" 10' 5' 0' 10' 20'

Bowman, Foster & Associates, P.C.
Consulting Engineers
192 Ballard Court, Suite 200
Virginia Beach, VA 23462

COMMONWEALTH OF VIRGINIA
R. D. Foster
10316
PROFESSIONAL ENGINEER

M-7

DEPARTMENT OF THE NAVY NAVAL FACILITIES ENGINEERING COMMAND
NAVY PUBLIC WORKS CENTER
NAVAL STATION NORFOLK, VIRGINIA

NAVAL STATION, NORFOLK, VIRGINIA

RENOVATION OF HVAC SYSTEMS; BUILDING C-9

SECOND FLOOR PLAN - DEMOLITION

JOB ORDER NO.	1325034
DES. RMK | DR. CAD | CHK. BDW	
BR. MGR.	RDF
SUBMITTED BY	FIRM MEMBER / PRINCIPAL
EIC	S. KATEPALLI, P.E.
DIV. DIR.	R.H. IVES JR., P.E.
APPROVED:	DATE: 4/20/95
SATISFACTORY TO ACTIVITY	
APPROVED:	DATE: 4/20/95
FOR C.O. COMMANDER, NAVFAC	

SIZE	CODE ID NO.	NAVFAC DRAWING NO.	PWC DRAWING NO.
D	80091	4,306,018	15271-L
		CONSTR. CONTR. NO.	N26470-93-C-5445
SCALE: NOTED		SPEC. 05-95-2986	SHEET 13 OF 40

8 7 6 5 4 3 2 1

D C B A

REVISIONS				
SYM	DESCRIPTION	DATE	SATISFACTORY	APPROVED BY

ASBESTOS NOTE (THIS SHEET ONLY)

⚠1 PIPE INSULATION IS CONSIDERED ASBESTOS CONTAINED MATERIAL AND SHALL UNDER GO COMPLETE ABAITMENT PER SPECIFICATION SECTION 02081 "ASBESTOS REMOVAL" PRIOR TO ANY DEMOLITION.

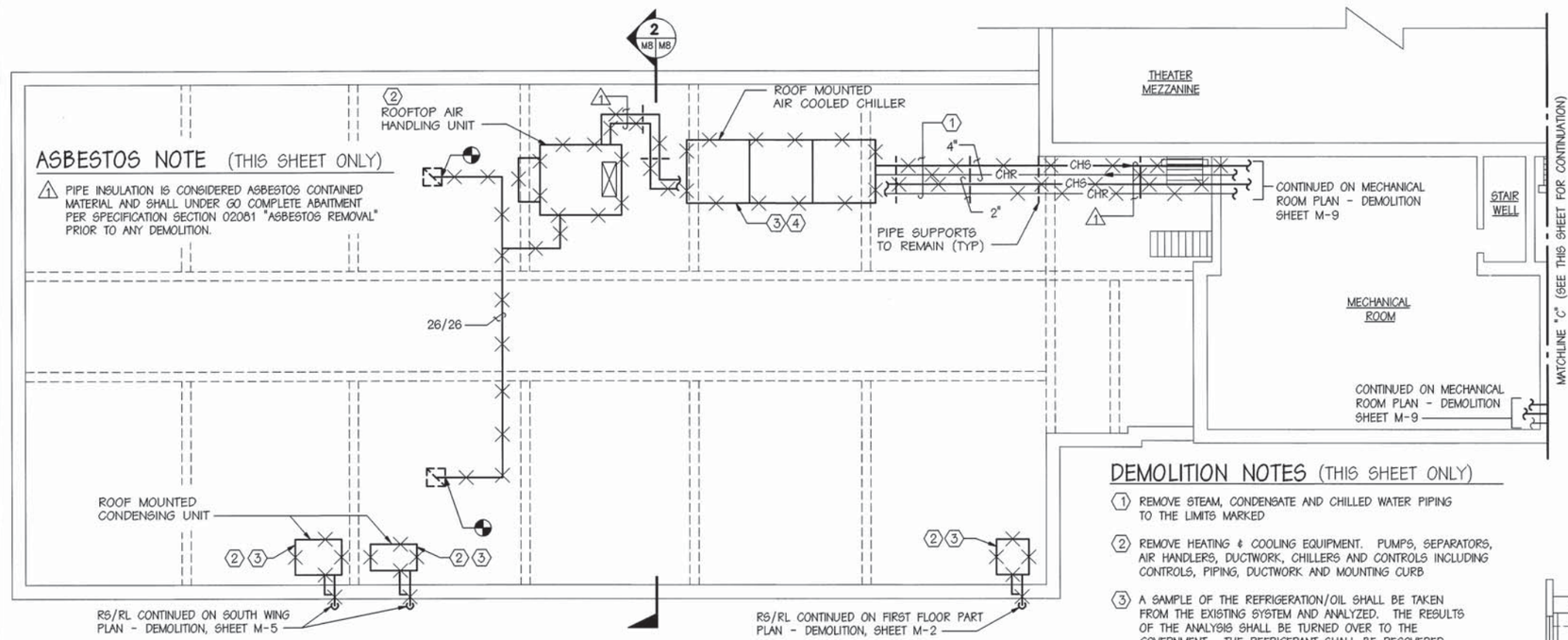

SECOND FLOOR ROOF PLAN (SOUTH) - DEMOLITION

SCALE: 1/8" = 1'-0"

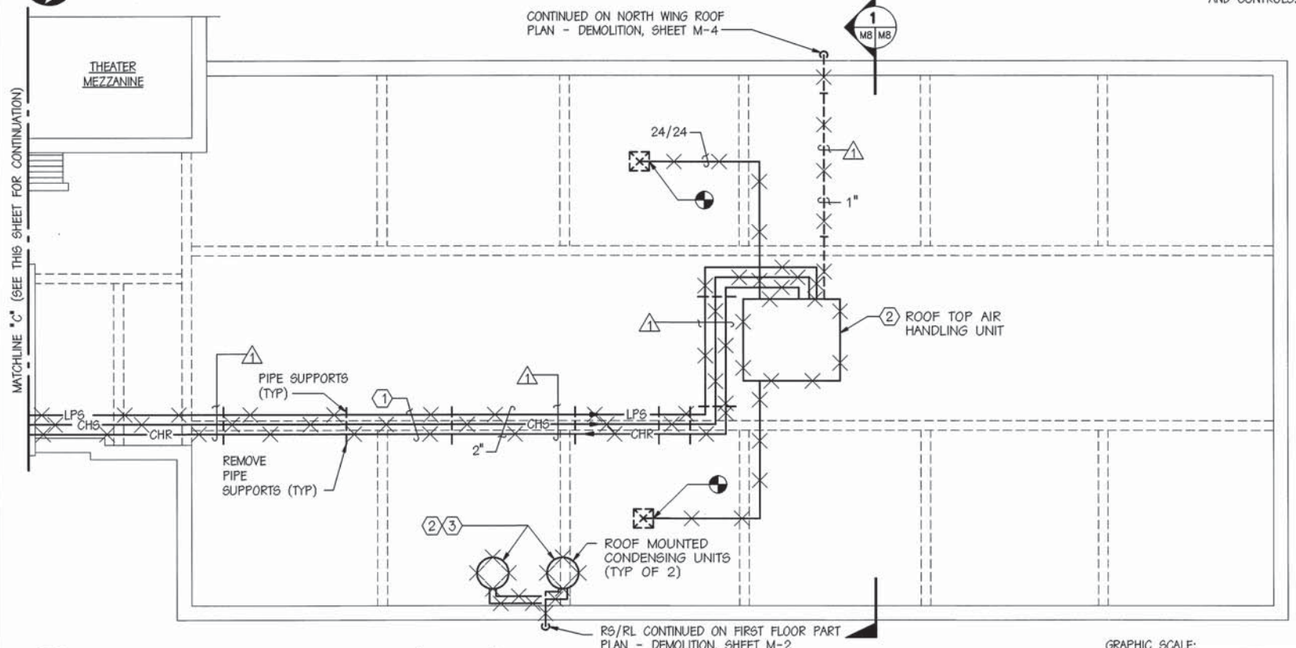

SECOND FLOOR ROOF PLAN (NORTH) - DEMOLITION

SCALE: 1/8" = 1'-0"

DEMOLITION NOTES (THIS SHEET ONLY)

1. REMOVE STEAM, CONDENSATE AND CHILLED WATER PIPING TO THE LIMITS MARKED
2. REMOVE HEATING & COOLING EQUIPMENT. PUMPS, SEPARATORS, AIR HANDLERS, DUCTWORK, CHILLERS AND CONTROLS INCLUDING CONTROLS, PIPING, DUCTWORK AND MOUNTING CURB
3. A SAMPLE OF THE REFRIGERATION/OIL SHALL BE TAKEN FROM THE EXISTING SYSTEM AND ANALYZED. THE RESULTS OF THE ANALYSIS SHALL BE TURNED OVER TO THE GOVERNMENT. THE REFRIGERANT SHALL BE RECOVERED AND TURNED OVER TO THE GOVERNMENT.
4. REMOVE AIR COOLED CHILLER AND ASSOCIATED PIPING AND CONTROLS.

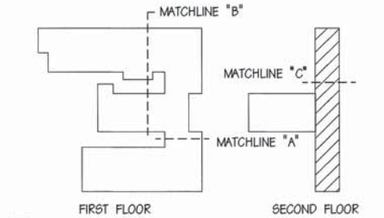

KEY PLAN

NOT TO SCALE

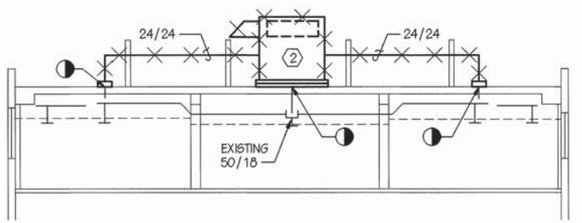

SECTION 1 M8 M8

SCALE: 1/8" = 1'-0"

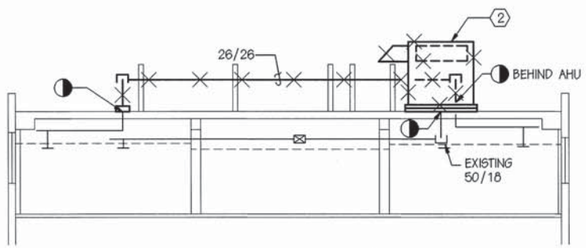

SECTION 2 M8 M8

SCALE: 1/8" = 1'-0"

GRAPHIC SCALE:

1/8" = 1'-0" 10' 5' 0' 10' 20'

Bowman, Foster & Associates, P.C.
Consulting Engineers
192 Ballard Court, Suite 200
Virginia Beach, VA 23462

COMMONWEALTH OF VIRGINIA
10316
PROFESSIONAL ENGINEER

M-8

DEPARTMENT OF THE NAVY NAVAL FACILITIES ENGINEERING COMMAND
NAVY PUBLIC WORKS CENTER
NAVAL STATION NORFOLK, VIRGINIA

NAVAL STATION, NORFOLK, VIRGINIA

RENOVATION OF HVAC SYSTEMS; BUILDING C-9

SECOND FLOOR ROOF PLAN - DEMOLITION

JOB ORDER NO.	1325034
DES. RMK | DR. CAD | CHK.	BDW
BR. MGR.	RDF
SUBMITTED BY:	
FIRM MEMBER / PRINCIPAL	
EIC	S. KATEPALLI, P.E.
DIV. DIR.	R.H. IVES JR., P.E.
APPROVED: DATE: SATISFACTORY TO ACTIVITY	
APPROVED: DATE: FOR C.O. COMMANDER, NAVFAC	

SIZE	CODE ID NO.	NAVFAC DRAWING NO.	PWC DRAWING NO.
D	80091	4,306,019	15271-M
		CONSTR. CONTR. NO.	N26470-93-C-5445
SCALE: NOTED		SPEC. 05-95-2986	SHEET 14 OF 40

8 7 6 5 4 3 2 1

D C B A

REVISIONS				
SYM	DESCRIPTION	DATE	SATISFACTORY	APPROVED BY

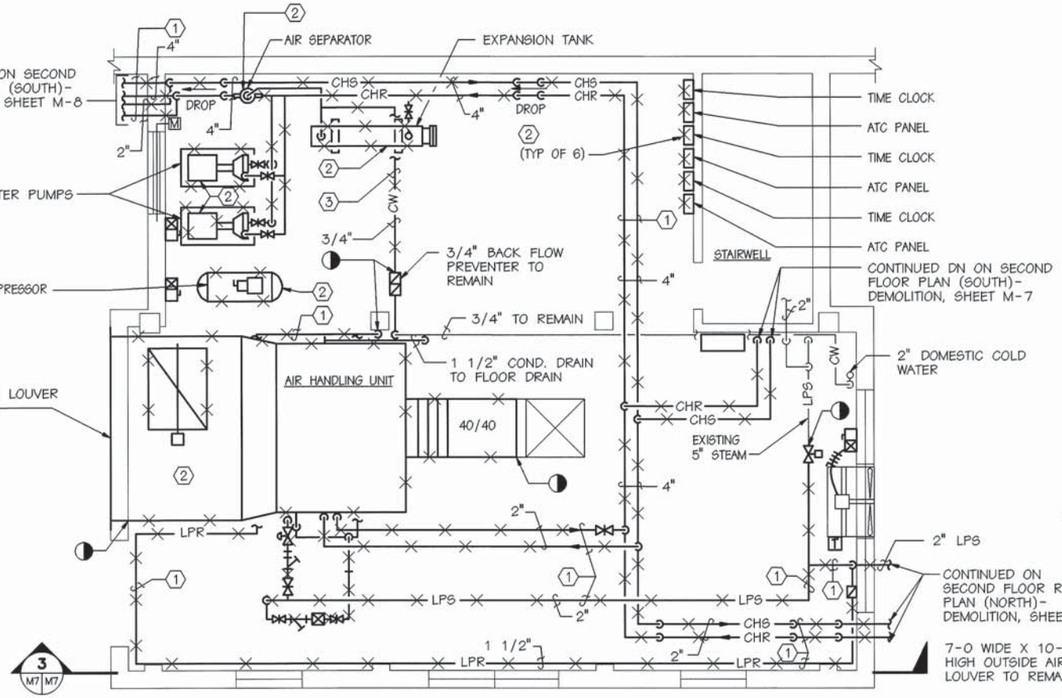

MECHANICAL ROOM PLAN - DEMOLITION

SCALE: 1/4" = 1'-0"

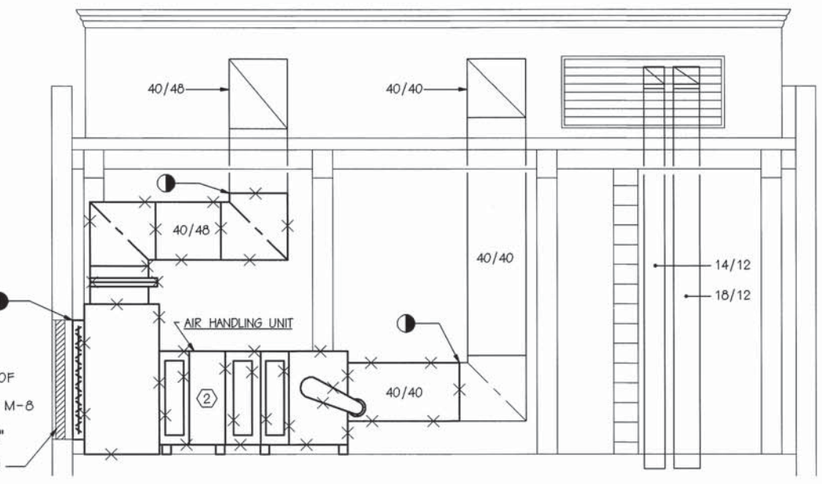

SECTION

SCALE: 1/4" = 1'-0"

3 M7 M7

DEMOLITION NOTES (THIS SHEET ONLY)

1. REMOVE STEAM, CONDENSATE AND CHILLED WATER PIPING TO THE LIMITS MARKED
2. REMOVE HEATING & COOLING EQUIPMENT. THIS INCLUDES PUMPS, SEPARATORS, TANKS, AIR HANDLERS, DUCTWORK, CHILLERS AND CONTROLS.
3. REMOVE MAKE UP WATER PIPING TO THE LIMITS MARKED.

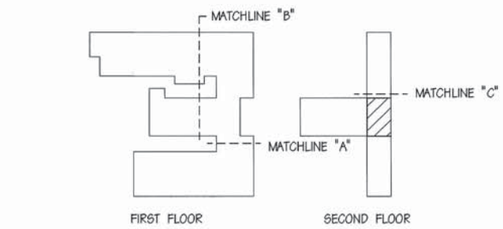

KEY PLAN

NOT TO SCALE

GRAPHIC SCALE:

1/4" = 1'-0" 5' 0' 5' 10'

Bowman, Foster & Associates, P.C.
Consulting Engineers
192 Ballard Court, Suite 200
Virginia Beach, VA 23462

COMMONWEALTH OF VIRGINIA R. D. Foster 15316 PROFESSIONAL ENGINEER

JOB ORDER NO. 1325034
DES. RMK | DR. CAD | CHK. BDW
BR. MGR. RDF
SUBMITTED BY
FIRM MEMBER / PRINCIPAL
EIC S. KATEPALLI, P.E.
DIV. DIR. R.H. IVES JR., P.E.
APPROVED: DATE:
SATISFACTORY TO ACTIVITY
APPROVED: DATE:
FOR C.O. COMMANDER/ NAVFAC

M-9

DEPARTMENT OF THE NAVY NAVAL FACILITIES ENGINEERING COMMAND
NAVY PUBLIC WORKS CENTER
NAVAL STATION NORFOLK, VIRGINIA

NAVAL STATION, NORFOLK, VIRGINIA

RENOVATION OF HVAC SYSTEMS; BUILDING C-9

MECHANICAL ROOM PLAN - DEMOLITION

SIZE	CODE ID NO.	NAVFAC DRAWING NO.	PWC DRAWING NO.
D	80091	4,306,020	15271-N
		CONSTR. CONTR. NO.	N26470-93-C-5445
SCALE: NOTED		SPEC. 05-95-2986	SHEET 15 OF 40

8 7 6 5 4 3 2 1

D C B A

REVISIONS				
SYM	DESCRIPTION	DATE	SATISFACTORY	APPROVED BY

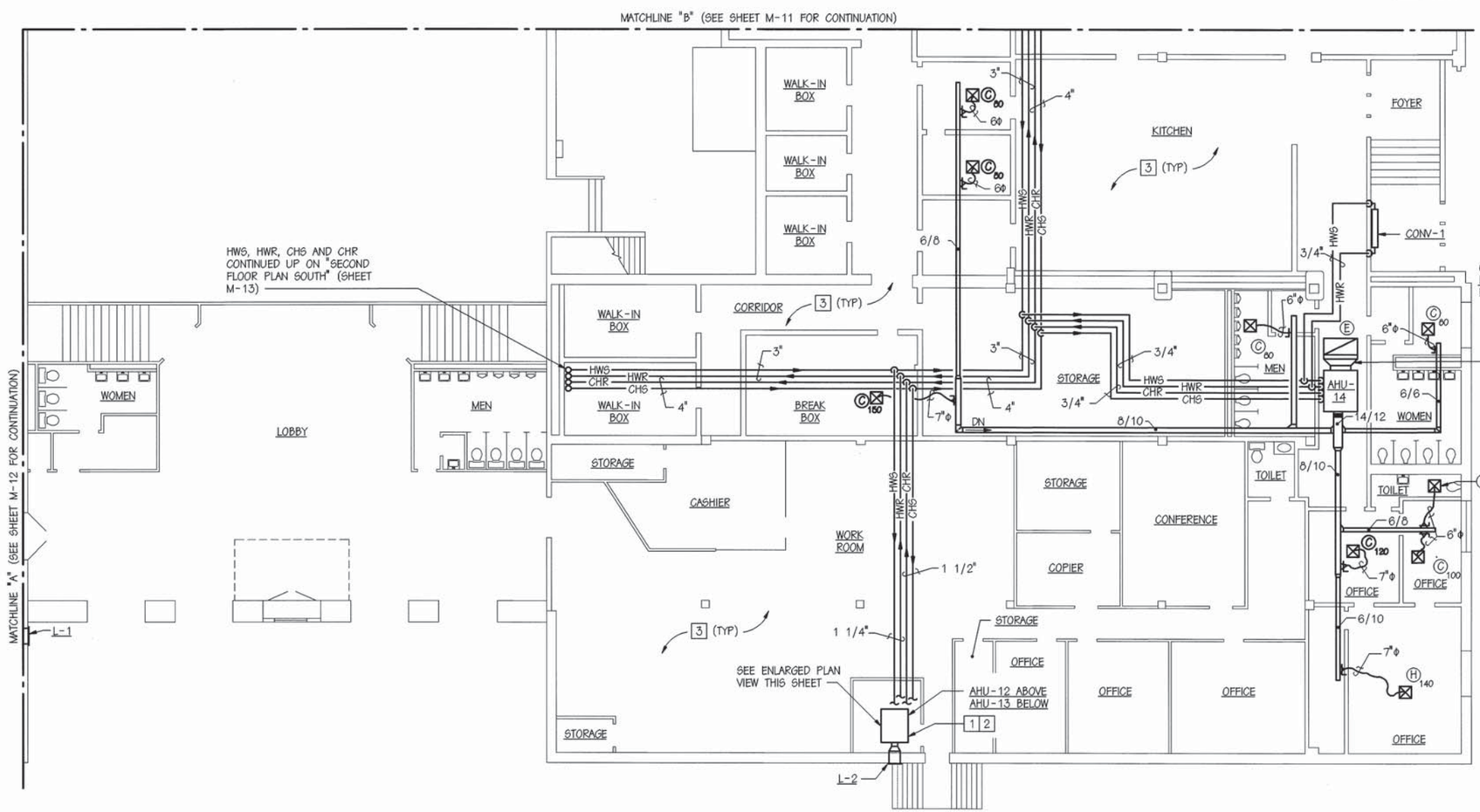

FIRST FLOOR PART PLAN - NEW WORK

SCALE: 1/8" = 1'-0"

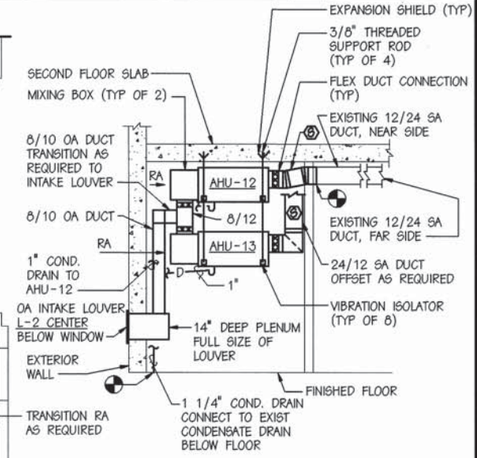

SECTION

SCALE: 1/4" = 1'-0"

A M10 M10

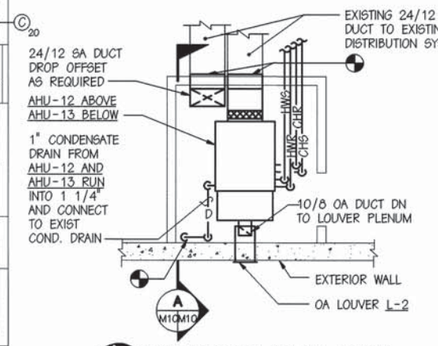

ENLARGED PLAN VIEW

SCALE: 1/4" = 1'-0"

NEW WORK NOTES (THIS SHEET ONLY)

1. CONNECXT EXISTING DUCTWORK TO NEW AIR HANDLING UNIT. PROVIDE DUCT TRANSITIONS AND FLEXIBLE CONNECTIONS AS REQUIRED.
2. CONNECT EXISTING CONDENSATE DRAIN TO NEW AIR HANDLING UNIT, EXTEND AND MODIFY PIPING AND PROVIDE P-TRAP AS REQUIRED.
3. REFER TO FIRST FLOOR PART PLAN - REFLECTED CEILING - PLAN, SHEET A-1 FOR LOCATION OF GRILLES AND DIFFUSERS

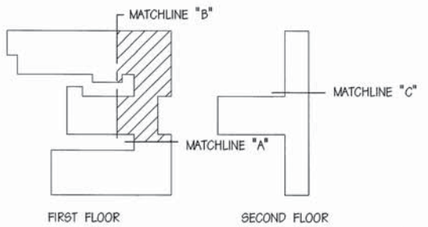

KEY PLAN

NOT TO SCALE

GRAPHIC SCALE:

1/4" = 1'-0" 5' 0' 5' 10'

1/8" = 1'-0" 10' 5' 0' 10' 20'

Bowman, Foster & Associates, P.C.
Consulting Engineers
192 Ballard Court, Suite 200
Virginia Beach, VA 23462

COMMONWEALTH OF VIRGINIA — R. D. Foster — 10376 — PROFESSIONAL ENGINEER

M-10

DEPARTMENT OF THE NAVY NAVAL FACILITIES ENGINEERING COMMAND

NAVY PUBLIC WORKS CENTER

NAVAL STATION NORFOLK, VIRGINIA

NAVAL STATION, NORFOLK, VIRGINIA

RENOVATION OF HVAC SYSTEMS; BUILDING C-9

FIRST FLOOR PART PLAN - NEW WORK

JOB ORDER NO.	1325034
DES. RMK | DR. CAD | CHK. BDW	
BR. MGR.	RDF
SUBMITTED BY	
FIRM MEMBER / PRINCIPAL	
EIC	S. KATEPALLI, P.E.
DIV. DIR.	R.H. IVES JR., P.E.
APPROVED:	DATE:
SATISFACTORY TO ACTIVITY	
APPROVED:	DATE:
FOR C.O. COMMANDER, NAVFAC	

SIZE	CODE ID NO.	NAVFAC DRAWING NO.	PWC DRAWING NO.
D	80091	4,306,021	15271-0
		CONSTR. CONTR. NO.	N26470-93-C-5445
SCALE: NOTED		SPEC. 05-95-2986	SHEET 16 OF 40

8 7 6 5 4 3 2 1

D C B A

REVISIONS				
SYM	DESCRIPTION	DATE	SATISFACTORY	APPROVED BY

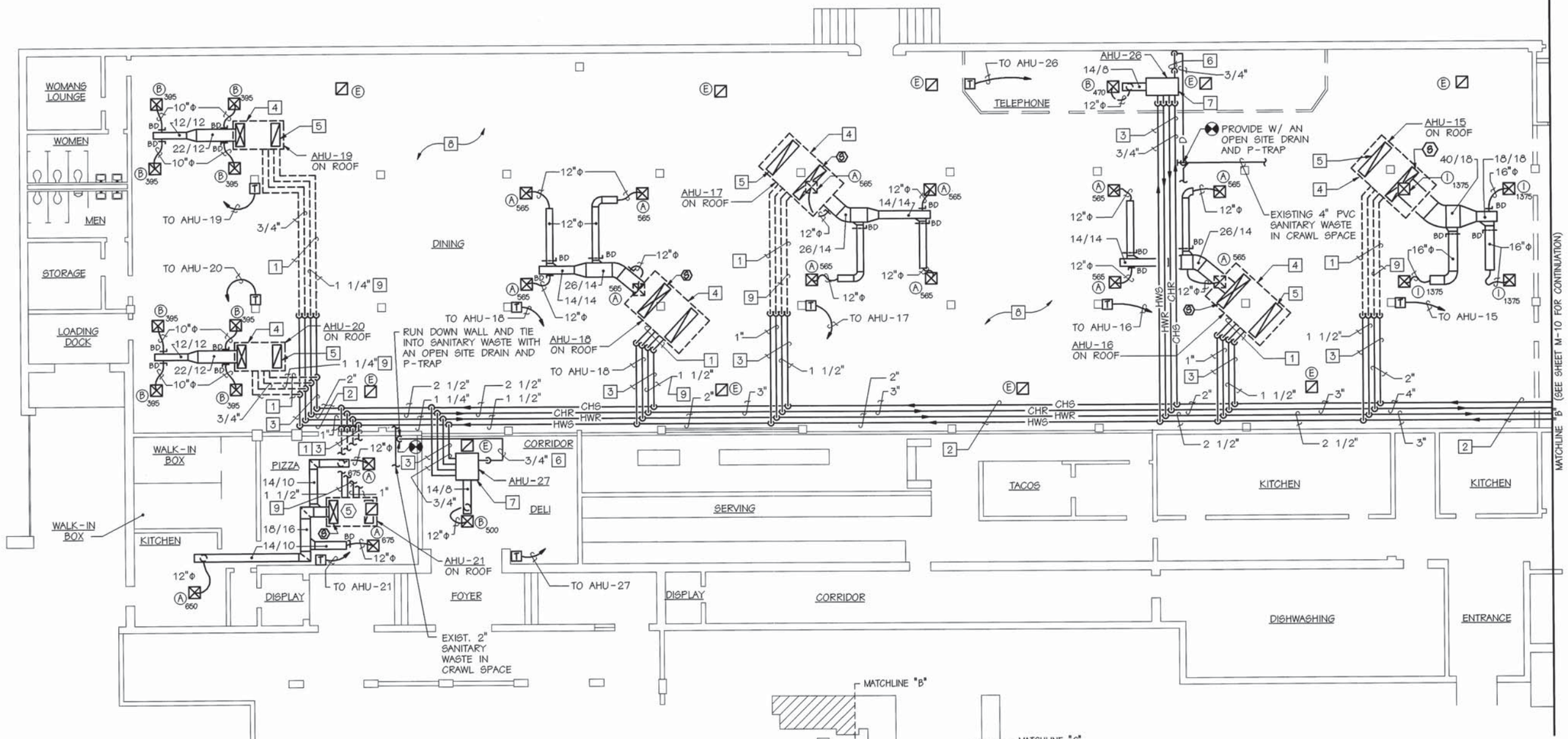

NORTH WING PLAN - NEW WORK

SCALE: 1/8" = 1'-0"

NEW WORK NOTES (THIS SHEET ONLY)

1. HWS, HWR, CHS AND CHR PIPING RUN ON ROOF
2. HWS, HWR, CHS AND CHR PIPING RUN IN SOFFIT AREA SEE ARCHITECTURAL PLANS
3. HWS, HWR, CHS AND CHR PIPIN RUN ABOVE CEILING
4. ROOF TOP AHU, RUN SUPPLY AND RETURN DUCTWORK AS REQUIRED TO CLEAR STRUCTURAL BEAMS WITHIN ROOF CURB WHERE DUCT RUNS REQUIRE A ROOF CURB LARGER THAN THE AIR HANDLING UNIT, BLANK OFF EXPOSED CURB AND COAT WITH EXTERNAL DUCT SEALING COMPOUND.
5. RETURN AIR DUCT, SAME SIZE AS UNIT OPENING EXTEND INTO PLENUM AREA
6. RUN 3/4" CONDENSATE DRAIN ABOVE CEILING TO WALL RUN DOWN WALL TO CRAWL SPACE AREA AND CONNECT TO EXISTING SANITARY DRAIN PIPING. PROVIDE WITH P-TRAP AT UNIT AND OPEN SITE DRAIN IN CRAWL SPACE.
7. AIR HANDLING UNIT SUSPENDED FROM ROOF STRUCTURE.
8. REFER TO NORTH WING - RFLECTED CEILING PLAN, SHEET A-2 FOR LOCATION OF GRILLES AND DIFFUSERS
9. WRAP ALL EXTERIOR CHS AND CHR PIPING WITH HEAT TAPE AT 1 WATT PER LIEAR FOOT AND 2 TURNS PER LINEAR FOOT OF PIPE

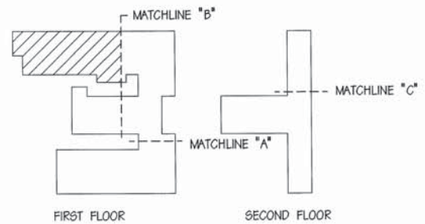

KEY PLAN

NOT TO SCALE

GRAPHIC SCALE:

1/8" = 1'-0" 10' 5' 0' 10' 20'

Bowman, Foster & Associates, P.C.
Consulting Engineers
192 Ballard Court, Suite 200
Virginia Beach, VA 23462

COMMONWEALTH OF VIRGINIA
R. D. Foster
10318
PROFESSIONAL ENGINEER

M-11

DEPARTMENT OF THE NAVY NAVAL FACILITIES ENGINEERING COMMAND
NAVY PUBLIC WORKS CENTER
NAVAL STATION NORFOLK, VIRGINIA

NAVAL STATION, NORFOLK, VIRGINIA

RENOVATION OF HVAC SYSTEMS; BUILDING C-9

NORTH WING PLAN - NEW WORK

JOB ORDER NO. 1325034			
DES. RMK | DR. CAD | CHK. BDW			
BR. MGR. RDF			
SUBMITTED BY: R.W. Foster FIRM MEMBER / PRINCIPAL			
EIC S. KATEPALLI, P.E.			
DIV. DIR. R.H. IVES JR., P.E.			
APPROVED: DATE: 6/23/95 SATISFACTORY TO ACTIVITY	SIZE D	CODE ID NO. 80091	NAVFAC DRAWING NO. 4,306,022 / PWC DRAWING NO. 15271-P
APPROVED: DATE: 6/23/95 FOR C.O. COMMANDER, NAVFAC	SCALE: NOTED	CONSTR. CONTR. NO. N62470-93-C-5445	SPEC. 05-95-2986 / SHEET 17 OF 40

8 7 6 5 4 3 2 1

D C B A

NEW WORK NOTES (THIS SHEET ONLY)

1. CONNECT EXISTING DUCTWORK TO NEW AIR HANDLING UNIT, PROVIDE DUCT TRANSITIONS AND FLEXIBLE CONNECTIONS AS REQUIRED.
2. CONNECT EXISTING CONDENSATE DRAIN TO NEW AIR HANDLING UNIT, EXTEND AND MODIFY PIPING AND PROVIDE P-TRAP AS REQUIRED.
3. AHU ON ROOF, PROVIDE WITH FACTOREY ROOF CURB. CONNECT EXISTING DUCTWORK TO NEW UNIT, PROVIDE DUCT TRANSITIONS AND FLEXIBLE CONNECTIONS AS REQUIRED.
4. HWS, HWR, CHS & CHR PIPING RUN ON ROOF.
5. REFER TO SOUTH WING - REFLECTED CEILING PLAN SHEET A-3, FOR LOCATION OF GRILLES AND DIFFUSERS.
6. WRAP ALL EXTERIOR CHS AND CHR PIPING WITH HEAT TAPE AT 1 WATT PER LINEAR FOOT AND 2 TURNS PER LINEAR FOOT OF PIPE.

REVISIONS				
SYM	DESCRIPTION	DATE	SATISFACTORY	APPROVED BY

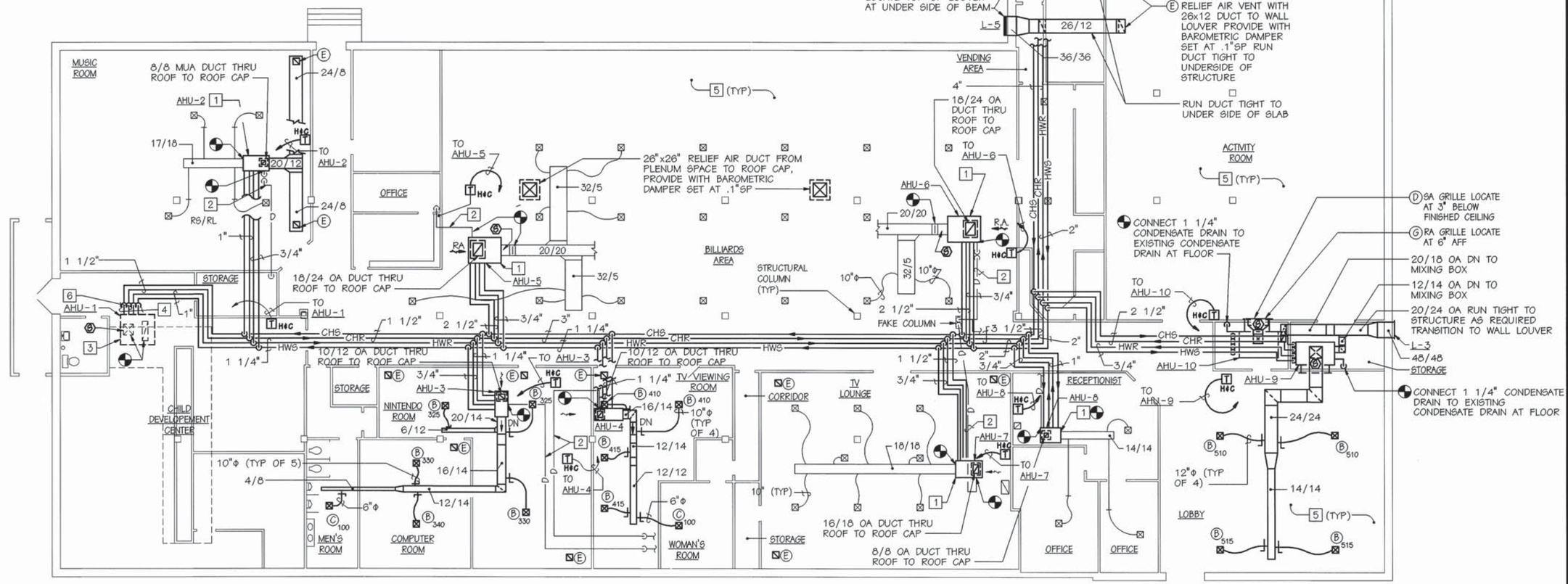

SOUTH WING PLAN - NEW WORK

SCALE: 1/8" = 1'-0"

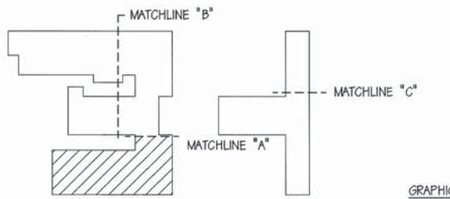

KEY PLAN

NOT TO SCALE

GRAPHIC SCALE:

1/8" = 1'-0" 10' 5' 0' 10' 20'

Bowman, Foster & Associates, P.C.
Consulting Engineers
192 Ballard Court, Suite 200
Virginia Beach, VA 23462

COMMONWEALTH OF VIRGINIA R. D. Foster 10316 PROFESSIONAL ENGINEER

M-12

DEPARTMENT OF THE NAVY NAVAL FACILITIES ENGINEERING COMMAND
NAVY PUBLIC WORKS CENTER
NAVAL STATION NORFOLK, VIRGINIA

NAVAL STATION, NORFOLK, VIRGINIA

RENOVATION OF HVAC SYSTEMS; BUILDING C-9

SOUTH WING PLAN - NEW WORK

JOB ORDER NO. 1325034
DES. RMK | DR. CAD | CHK. BDW
BR. MGR. RDF
SUBMITTED BY
FIRM MEMBER / PRINCIPAL
EIC S. KATEPALLI, P.E.
DIV. DIR. R.H. IVES JR., P.E.
APPROVED: DATE:
SATISFACTORY TO ACTIVITY
APPROVED: DATE: 6/30/95
FOR C.O. COMMANDER, NAVFAC

SIZE	CODE ID NO.	NAVFAC DRAWING NO.	PWC DRAWING NO.
D	80091	4,306,023	15271-Q
SCALE: NOTED		CONSTR. CONTR. NO. N26470-93-C-5445	
		SPEC. 05-95-2986	SHEET 18 OF 40

REVISIONS				
SYM	DESCRIPTION	DATE	SATISFACTORY	APPROVED BY

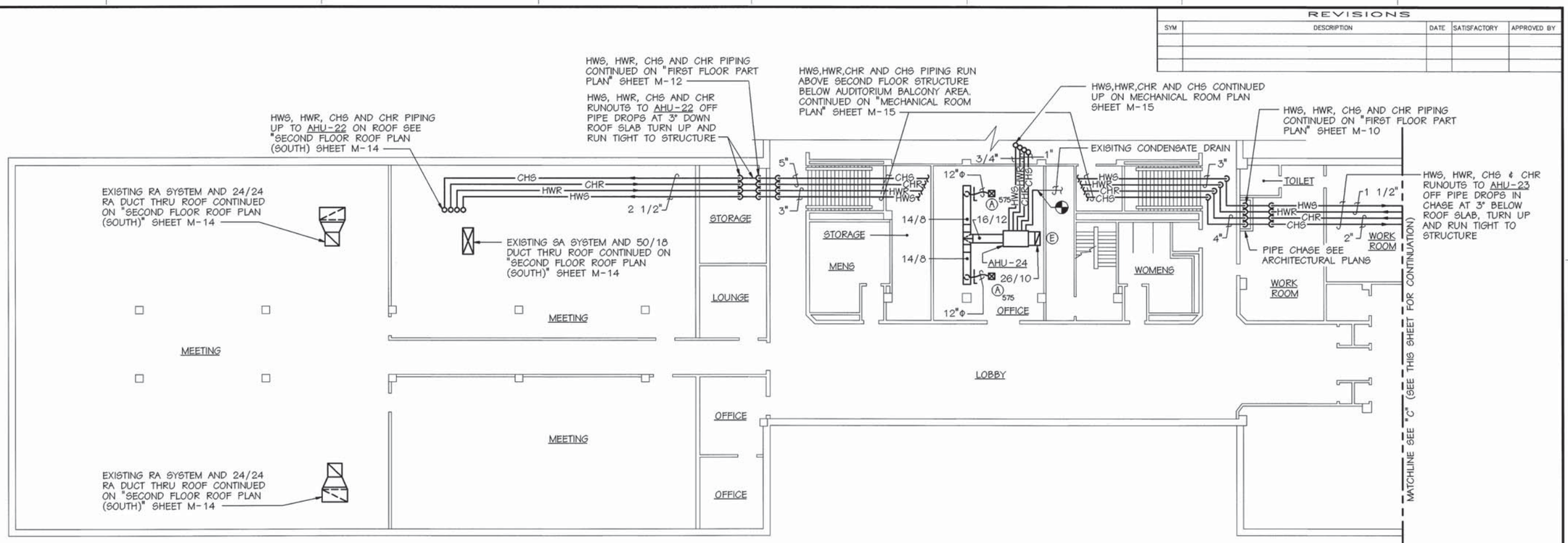

SECOND FLOOR PLAN (SOUTH) - NEW WORK
SCALE: 1/8" = 1'-0"

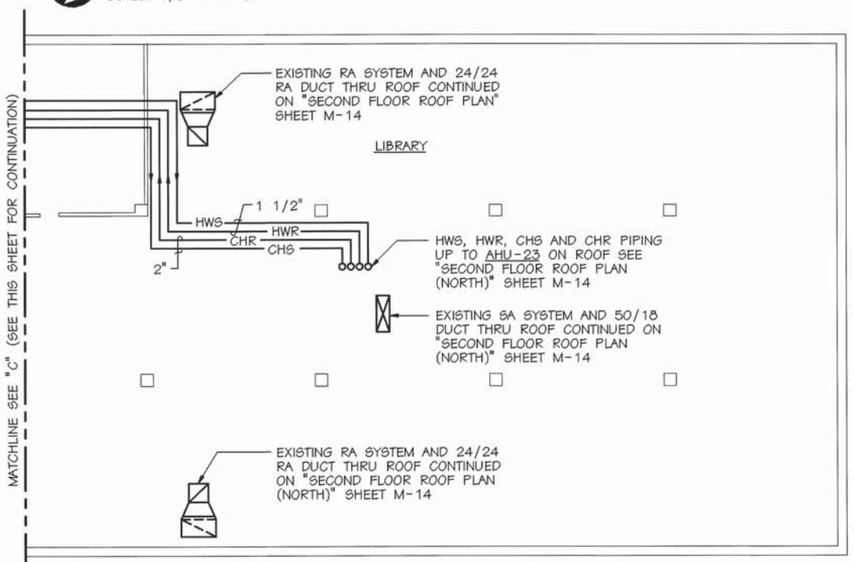

SECOND FLOOR PLAN (NORTH) - NEW WORK
SCALE: 1/8" = 1'-0"

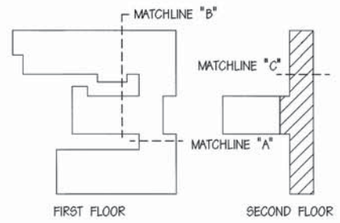

KEY PLAN
NOT TO SCALE

GRAPHIC SCALE:
1/8" = 1'-0" 10' 5' 0' 10' 20'

Bowman, Foster & Associates, P.C.
Consulting Engineers
192 Ballard Court, Suite 200
Virginia Beach, VA 23462

COMMONWEALTH OF VIRGINIA
R. D. Foster
10316
PROFESSIONAL ENGINEER

M-13

DEPARTMENT OF THE NAVY NAVAL FACILITIES ENGINEERING COMMAND
NAVY PUBLIC WORKS CENTER
NAVAL STATION NORFOLK, VIRGINIA

NAVAL STATION, NORFOLK, VIRGINIA

RENOVATION OF HVAC SYSTEMS; BUILDING C-9

SECOND FLOOR PLAN - NEW WORK

JOB ORDER NO. 1325034		
DES. RMK	DR. CAD	CHK. BDW
BR. MGR. RDF		
SUBMITTED BY: (R.D. Foster) FIRM MEMBER / PRINCIPAL		
EIC S. KATEPALLI, P.E.		
DIV. DIR. R.H. IVES JR., P.E.		
APPROVED: DATE: SATISFACTORY TO ACTIVITY		
APPROVED: DATE: FOR C.O. COMMANDER, NAVFAC		

SIZE	CODE ID NO.	NAVFAC DRAWING NO.	PWC DRAWING NO.
D	80091	4,306,024	15271-R
		CONSTR. CONTR. NO. N26470-93-C-5445	
SCALE: NOTED		SPEC. 05-95-2986	SHEET 19 OF 40

8 7 6 5 4 3 2 1
D C B A

REVISIONS				
SYM	DESCRIPTION	DATE	SATISFACTORY	APPROVED BY

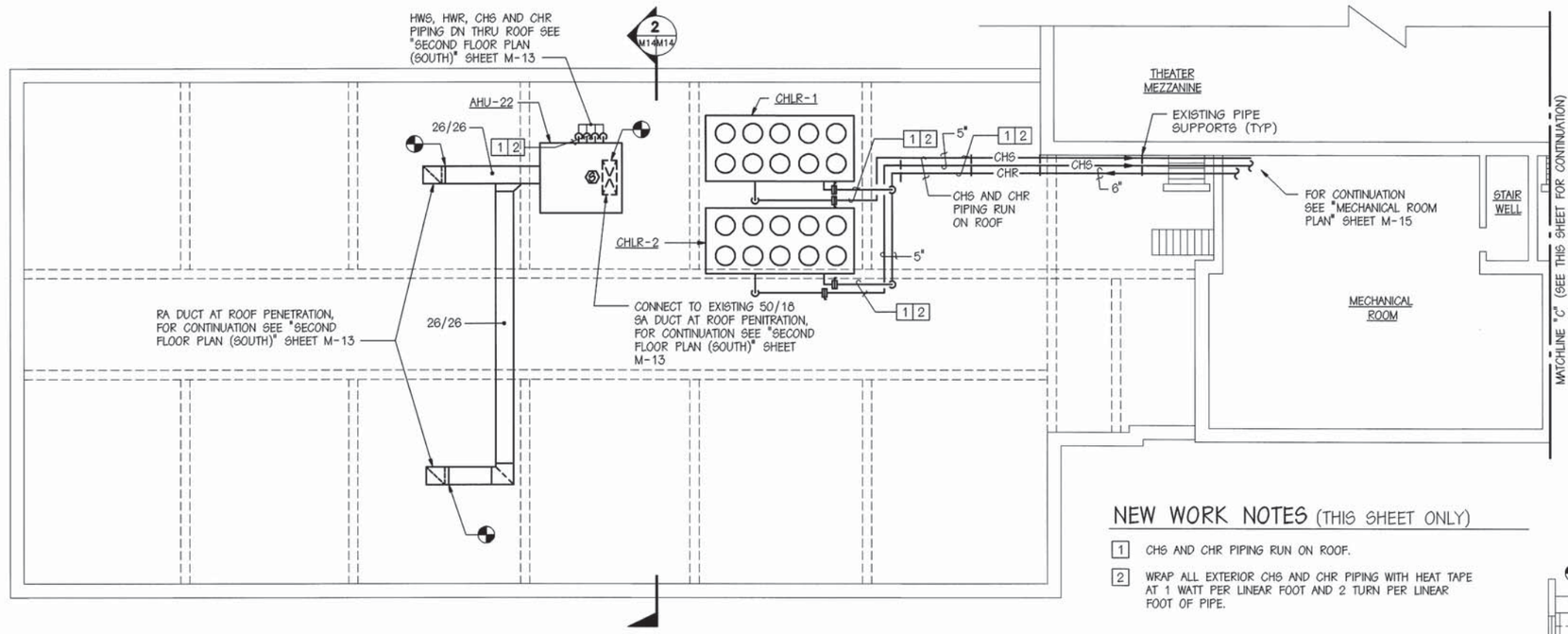

SECOND FLOOR ROOF PLAN (SOUTH) - NEW WORK

SCALE: 1/8" = 1'-0"

NEW WORK NOTES (THIS SHEET ONLY)

1. CHS AND CHR PIPING RUN ON ROOF.
2. WRAP ALL EXTERIOR CHS AND CHR PIPING WITH HEAT TAPE AT 1 WATT PER LINEAR FOOT AND 2 TURN PER LINEAR FOOT OF PIPE.

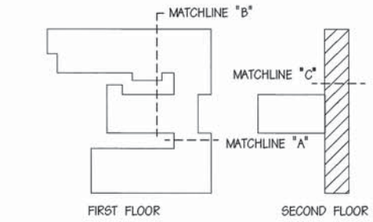

KEY PLAN

NOT TO SCALE

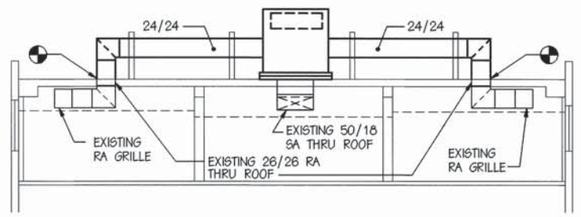

SECTION 1

SCALE: 1/8" = 1'-0"

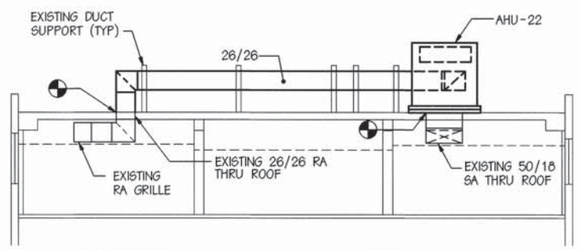

SECTION 2

SCALE: 1/8" = 1'-0"

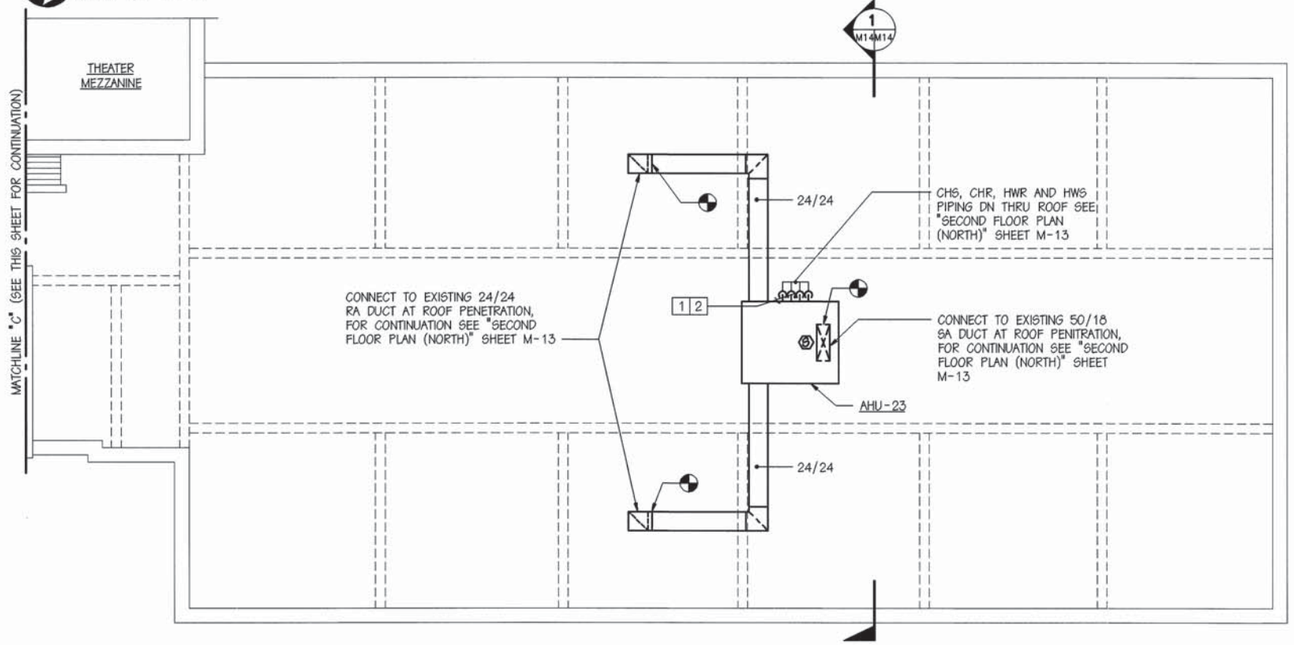

SECOND FLOOR ROOF PLAN (NORTH) - NEW WORK

SCALE: 1/8" = 1'-0"

GRAPHIC SCALE:

1/8" = 1'-0" 10' 5' 0' 10' 20'

Bowman, Foster & Associates, P.C.
Consulting Engineers
192 Ballard Court, Suite 200
Virginia Beach, VA 23462

COMMONWEALTH OF VIRGINIA — Foster — 10316 — PROFESSIONAL ENGINEER

JOB ORDER NO.	1325034
DES. RMK | DR. CAD | CHK. BDW	
BR. MGR.	RDF
SUBMITTED BY	
FIRM MEMBER / PRINCIPAL	
EIC	S. KATEPALLI, P.E.
DIV. DIR.	R.H. IVES JR., P.E.
APPROVED:	DATE: 6/30/95
SATISFACTORY TO ACTIVITY	
APPROVED: FOR C.O. COMMANDER, NAVFAC	DATE: 6/30/95

M-14

DEPARTMENT OF THE NAVY NAVAL FACILITIES ENGINEERING COMMAND
NAVY PUBLIC WORKS CENTER
NAVAL STATION NORFOLK, VIRGINIA

NAVAL STATION, NORFOLK, VIRGINIA

RENOVATION OF HVAC SYSTEMS; BUILDING C-9

SECOND FLOOR ROOF PLAN - NEW WORK

SIZE	CODE ID NO.	NAVFAC DRAWING NO.	PWC DRAWING NO.
D	80091	4,306,025	15271-S
		CONSTR. CONTR. NO.	N26470-93-C-5445
SCALE: NOTED		SPEC. 05-95-2986	SHEET 20 OF 40

8 7 6 5 4 3 2 1

D C B A

REVISIONS				
SYM	DESCRIPTION	DATE	SATISFACTORY	APPROVED BY

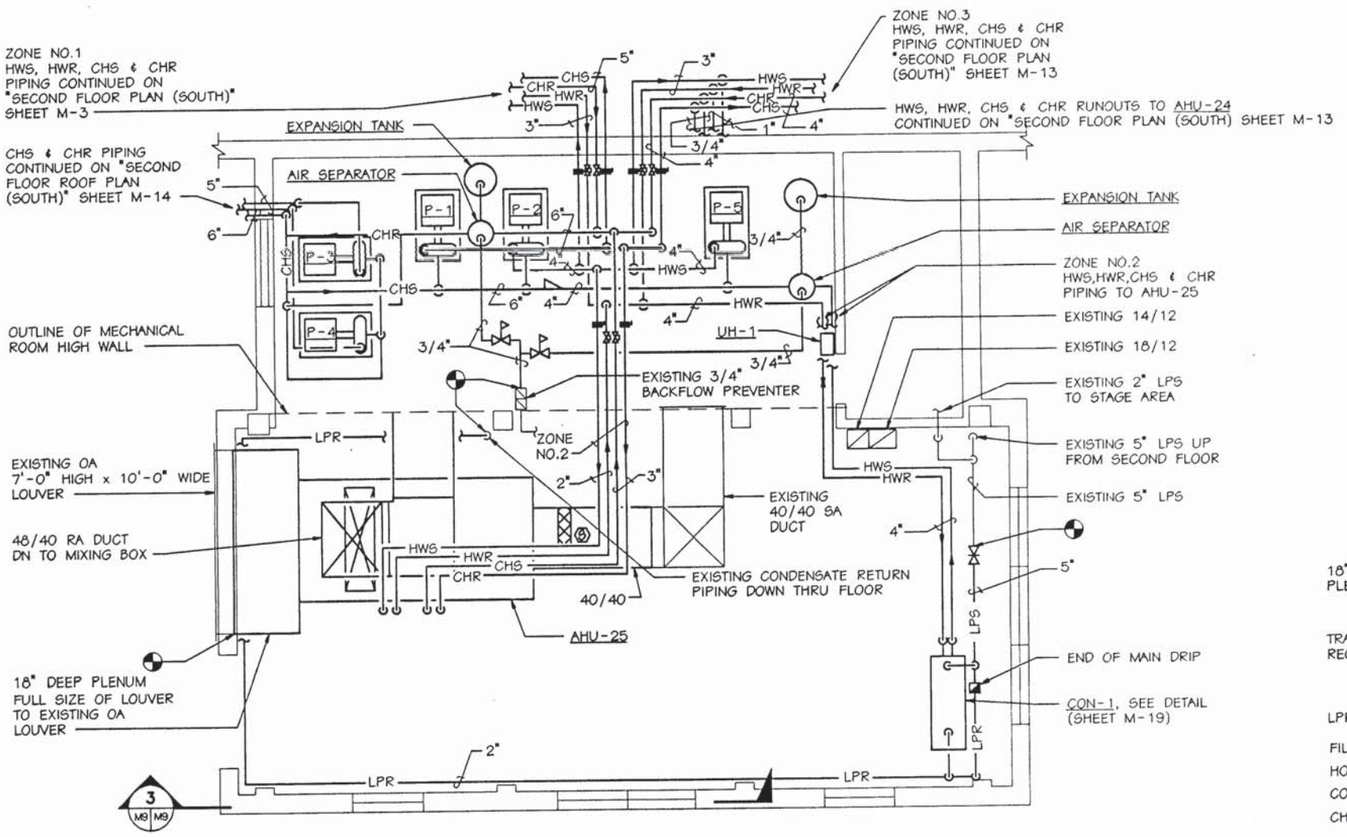

MECHANICAL ROOM PLAN

SCALE: 1/4" = 1'-0"

NOTE: SEE PIPING DIAGRAMS SHEET M-17

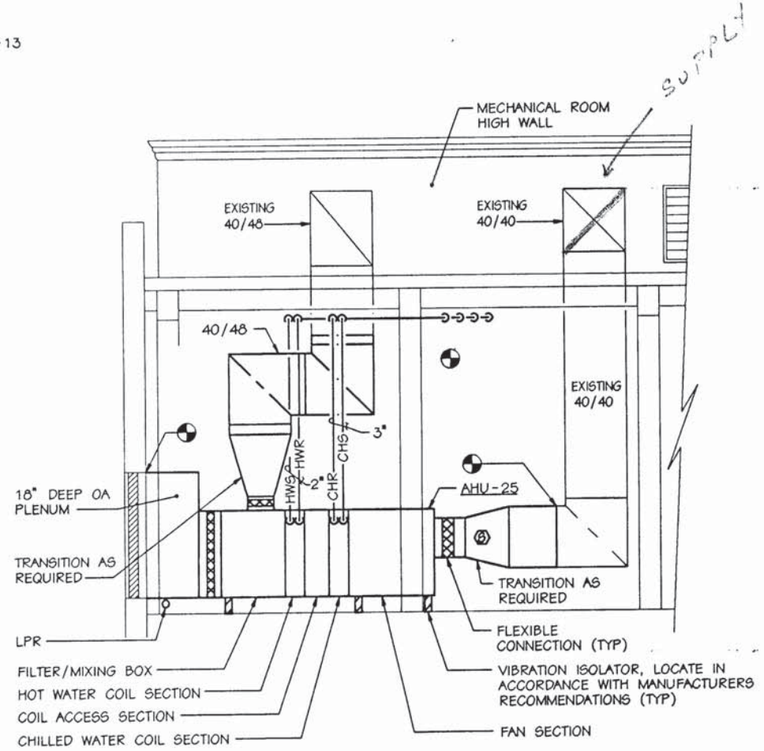

SECTION

SCALE: 1/4" = 1'-0"

3 / M7 M7

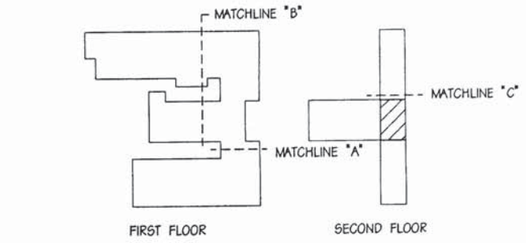

KEY PLAN

NOT TO SCALE

GRAPHIC SCALE:

1/4" = 1'-0" 5' 0' 5' 10'

Bowman, Foster & Associates, P.C.
Consulting Engineers
192 Ballard Court, Suite 200
Virginia Beach, VA 23462

COMMONWEALTH OF VIRGINIA
R. D. Foster
10376
PROFESSIONAL ENGINEER

M-15

DEPARTMENT OF THE NAVY , NAVAL FACILITIES ENGINEERING COMMAND
NAVY PUBLIC WORKS CENTER
NAVAL STATION NORFOLK, VIRGINIA

NAVAL STATION, NORFOLK, VIRGINIA

RENOVATION OF HVAC SYSTEMS; BUILDING C-9

MECHANICAL ROOM PLAN - NEW WORK

JOB ORDER NO. 1325034		
DES. RMK	DR. CAD	CHK. BDW
BR. MGR. RDF		
SUBMITTED BY: FIRM MEMBER / PRINCIPAL		
EIC S. KATEPALLI, P.E.		
DIV. DIR. R.H. IVES JR., P.E.		
APPROVED: DATE: 4/20/95 SATISFACTORY TO ACTIVITY		
APPROVED: DATE: 4/20/95 FOR C.O. COMMANDER, NAVFAC		

SIZE	CODE ID NO.	NAVFAC DRAWING NO.	PWC DRAWING NO.
D	80091	4,306,026	15271-T
		CONSTR. CONTR. NO. N26470-93-C-5445	
SCALE: NOTED		SPEC. 05-95-2986	SHEET 21 OF 40

8 7 6 5 4 3 2 1

D C B A

REVISIONS				
SYM	DESCRIPTION	DATE	SATISFACTORY	APPROVED BY

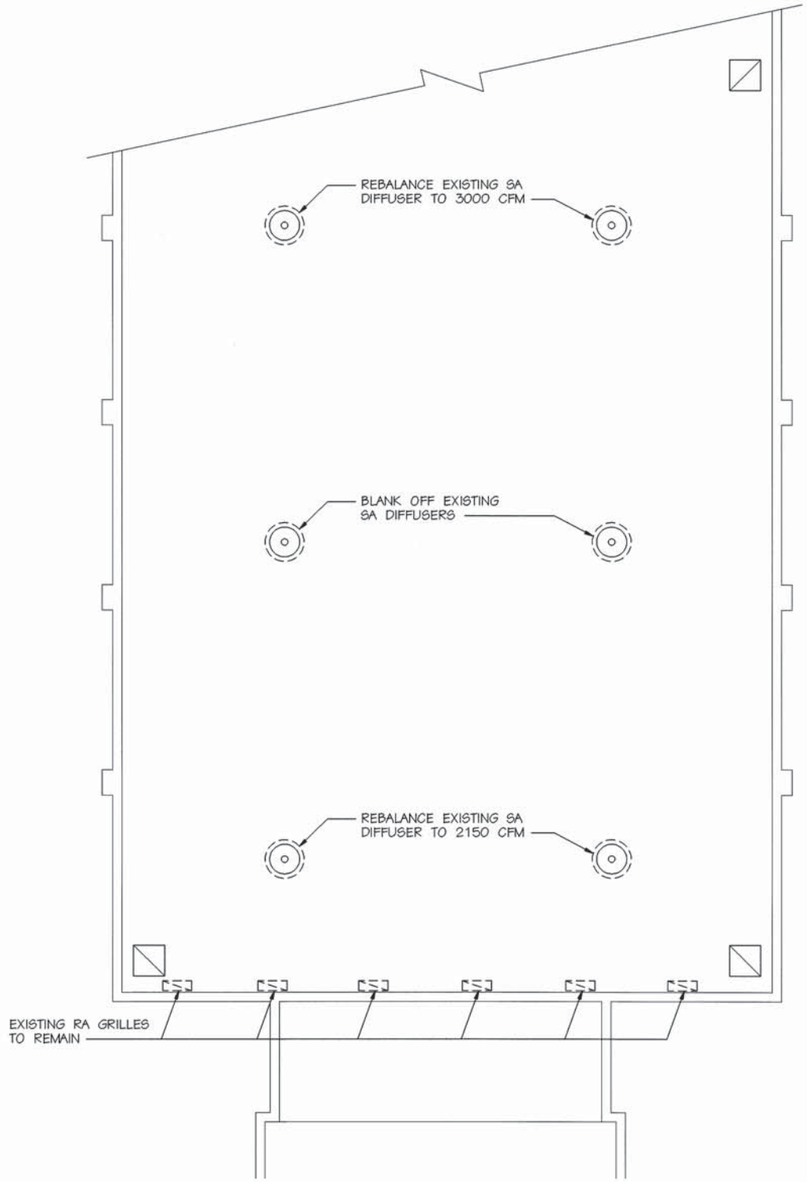

AUDITORIUM PLAN

SCALE: 1/8" = 1'-0"

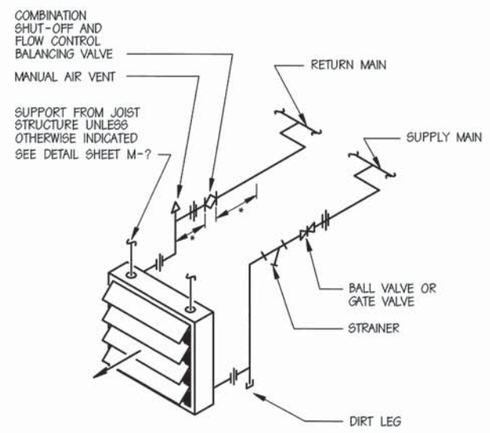

* THE FLOW CONTROL BALANCING VALVES SHALL BE INSTALLED BY THE CONTRACTOR IN CONFORMANCE WITH VALVE MFGR'S RECOMMENDED SPACING UP/DOWNSTREAM FROM PIPE CHANGES IN DIRECTION AND/OR OTHER VALVES/COMPONENTS IN THE PIPING.

HOT WATER UNIT HEATER PIPING DETAIL

NO SCALE

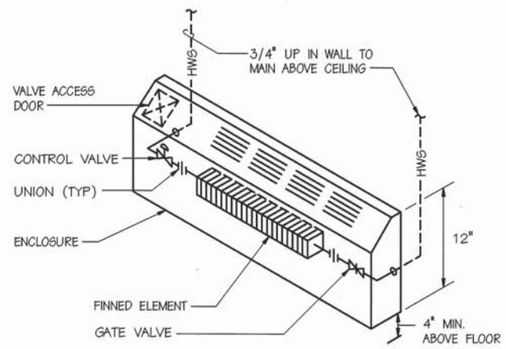

CONVECTOR DETAIL

NO SCALE

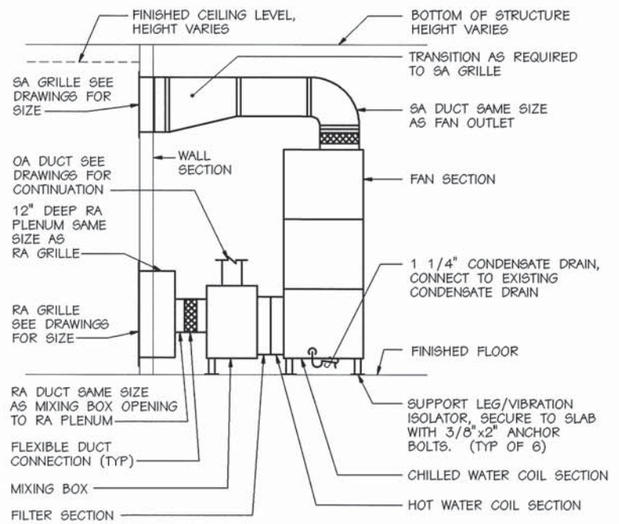

VERTICAL AHU DETAIL

NO SCALE

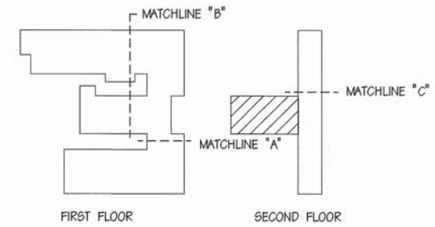

KEY PLAN

NOT TO SCALE

GRAPHIC SCALE:

1/8" = 1'-0" 10' 5' 0' 10' 20'

Bowman, Foster & Associates, P.C.
Consulting Engineers
192 Ballard Court, Suite 200
Virginia Beach, VA 23462

COMMONWEALTH OF VIRGINIA R. D. Foster 10316 PROFESSIONAL ENGINEER

JOB ORDER NO.	1325034
DES. RMK | DR. CAD | CHK. BDW	
BR. MGR.	RDF
SUBMITTED BY:	
FIRM MEMBER / PRINCIPAL	
EIC	S. KATEPALLI, P.E.
DIV. DIR.	R.H. IVES JR., P.E.
APPROVED:	DATE:
SATISFACTORY TO ACTIVITY	
APPROVED:	DATE:
FOR C.O. COMMANDER, NAVFAC	

M-16

DEPARTMENT OF THE NAVY NAVAL FACILITIES ENGINEERING COMMAND
NAVY PUBLIC WORKS CENTER
NAVAL STATION NORFOLK, VIRGINIA

NAVAL STATION, NORFOLK, VIRGINIA

RENOVATION OF HVAC SYSTEMS; BUILDING C-9

AUDITORIUM PLAN & DETAILS

SIZE	CODE ID NO.	NAVFAC DRAWING NO.	PWC DRAWING NO.
D	80091	4,306,027	15271-U
		CONSTR. CONTR. NO.	N62470-93-C-5445
SCALE: NOTED		SPEC. 05-95-2986	SHEET 22 OF 40

8 7 6 5 4 3 2 1

D C B A

REVISIONS				
SYM	DESCRIPTION	DATE	SATISFACTORY	APPROVED BY

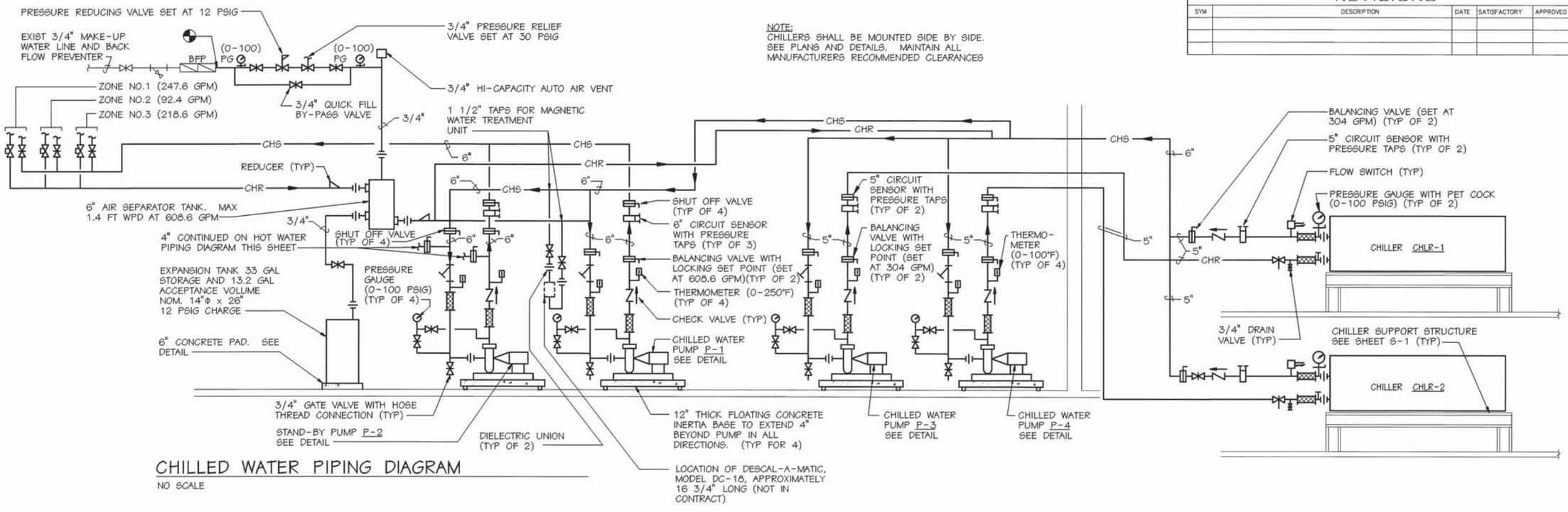

CHILLED WATER PIPING DIAGRAM

NO SCALE

NOTE:
CHILLERS SHALL BE MOUNTED SIDE BY SIDE. SEE PLANS AND DETAILS. MAINTAIN ALL MANUFACTURERS RECOMMENDED CLEARANCES

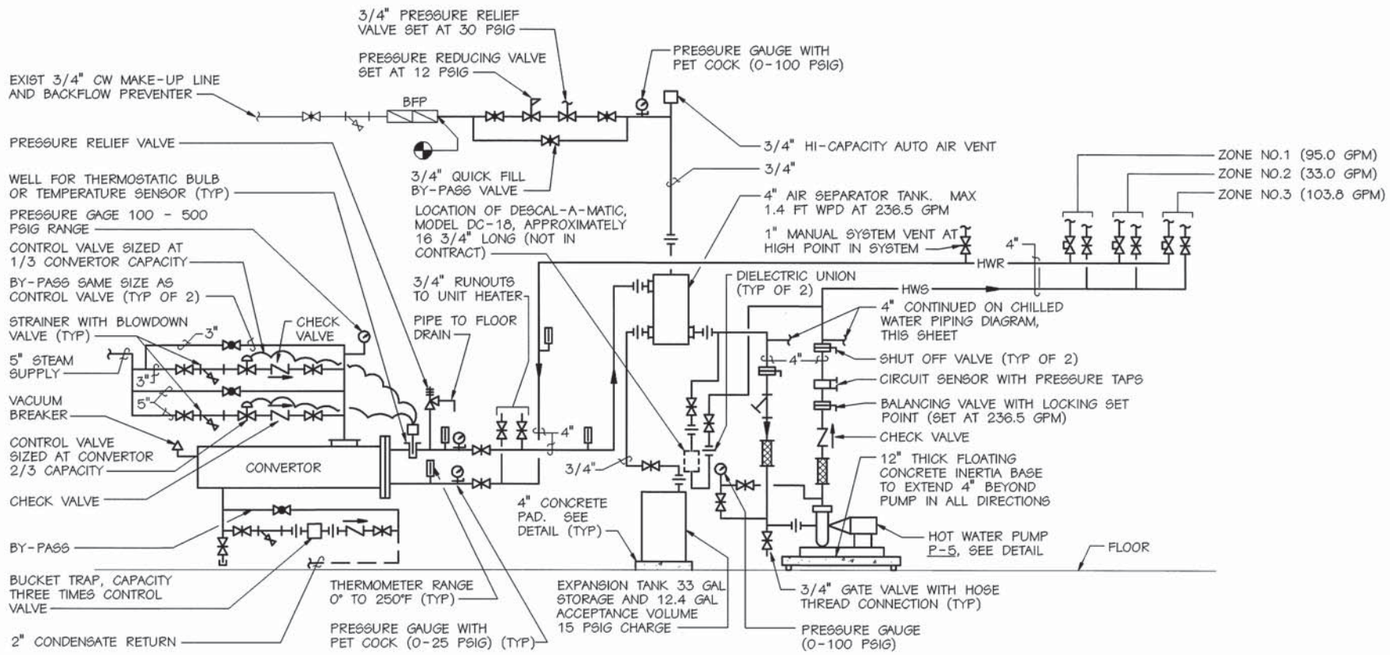

HOT WATER PIPING DIAGRAM

NO SCALE

NOTE:
CIRCUIT SENSORS BASED ON BELL & GOSSET FLOW METER-TYPE A. SIZE SENSORS TO PRODUCE A 2 TO 5 FT. OF WG. AT DESIGN FLOW.

Bowman, Foster & Associates, P.C.
Consulting Engineers
192 Ballard Court, Suite 200
Virginia Beach, VA 23462

COMMONWEALTH OF VIRGINIA
R. D. Foster
10316
PROFESSIONAL ENGINEER

M-17

DEPARTMENT OF THE NAVY NAVAL FACILITIES ENGINEERING COMMAND
NAVY PUBLIC WORKS CENTER
NAVAL STATION NORFOLK, VIRGINIA

NAVAL STATION, NORFOLK, VIRGINIA

RENOVATION OF HVAC SYSTEMS; BUILDING C-9

PIPING DIAGRAMS

JOB ORDER NO. 1325034			
DES. RMK | DR. CAD | CHK. BDW			
BR. MGR. RDF			
SUBMITTED BY: FIRM MEMBER / PRINCIPAL			
EIC S. KATEPALLI, P.E.			
DIV. DIR. R.H. IVES JR., P.E.			
APPROVED: DATE: 6/23/95 SATISFACTORY TO ACTIVITY	SIZE D	CODE ID NO. 80091	NAVFAC DRAWING NO. 4,306,028 / PWC DRAWING NO. 15271-V
APPROVED: DATE: 6/28/95 FOR C.O. COMMANDER, NAVFAC	SCALE: NOTED	CONSTR. CONTR. NO. N62470-93-C-5445	SPEC. 05-95-2986 / SHEET 23 OF 40

8 7 6 5 4 3 2 1

D C B A

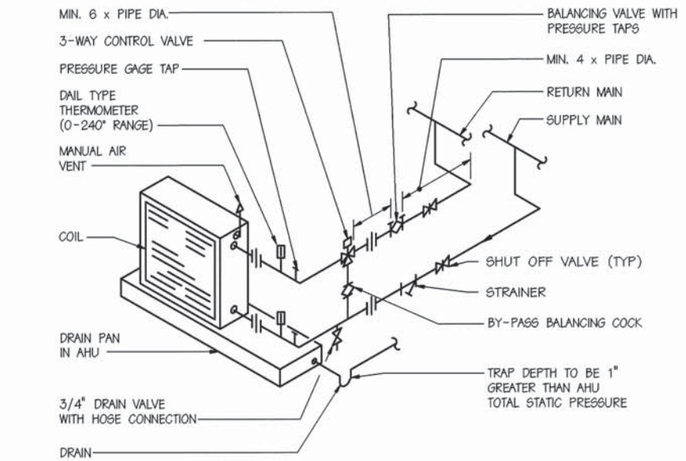

AHU COIL PIPING DETAIL (TYP FOR HW AND CW COILS)

NO SCALE

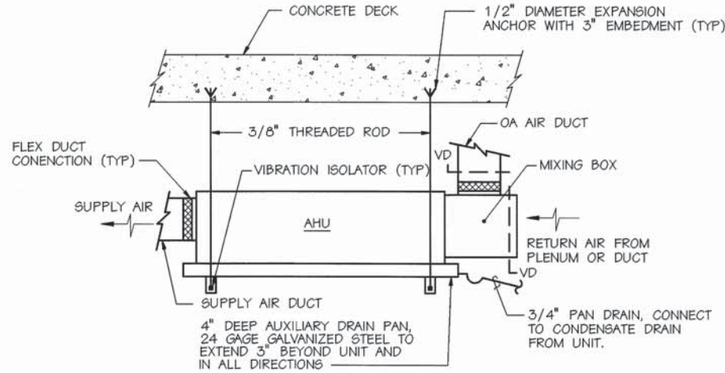

AHU INSTALLATION DETAIL

NO SCALE

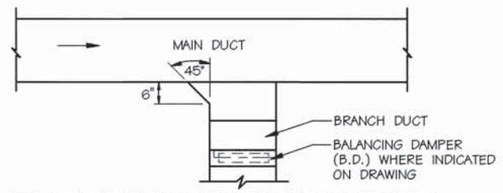

USE ONLY AT LAST TAKE-OFF BEFORE OUTLET & THEN ONLY WHERE RECTANGULAR RUNOUTS ARE INDICATED ON DRAWINGS.

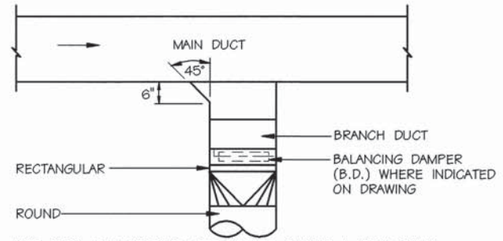

USE ONLY AT LAST TAKE-OFF BEFORE OUTLET & THEN ONLY WHERE RECTANGULAR RUNOUTS ARE INDICATED ON DRAWINGS.

TYPICAL BRANCH CONNECTION

NO SCALE

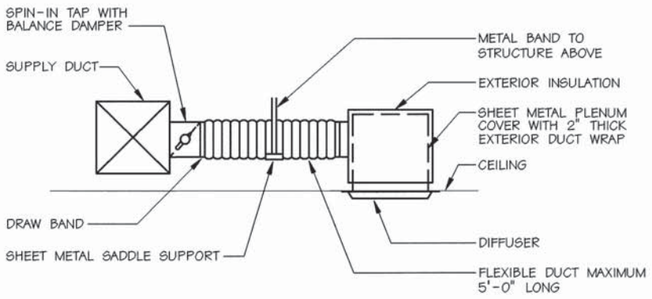

FLEXIBLE DUCTWORK / DIFFUSER DETAIL

NO SCALE

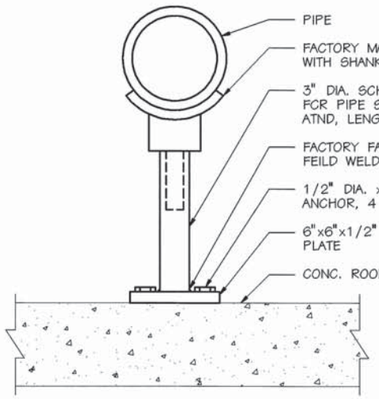

TYPICAL PIPE SUPPORT STAND DETAIL

NO SCALE

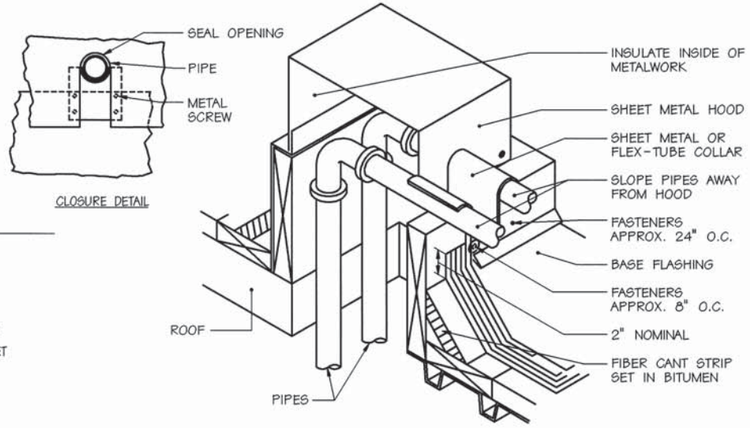

THRU ROOF PIPING DETAIL

NO SCALE

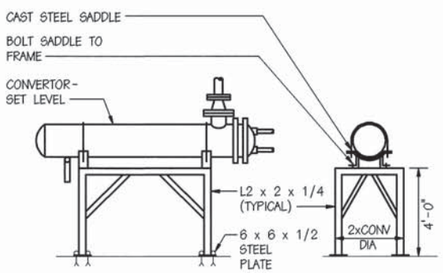

CONVERTOR SUPPORT DETAIL

NO SCALE

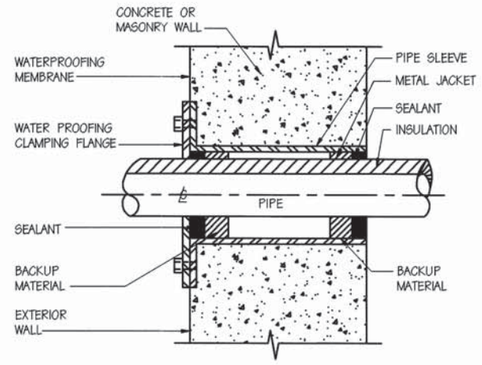

PIPE SLEEVE THRU EXTERIOR WALL

NO SCALE

REVISIONS				
SYM	DESCRIPTION	DATE	SATISFACTORY	APPROVED BY

Bowman, Foster & Associates, P.C.
Consulting Engineers
192 Ballard Court, Suite 200
Virginia Beach, VA 23462

COMMONWEALTH OF VIRGINIA — R. D. Foster — 10316 — PROFESSIONAL ENGINEER

M-18

DEPARTMENT OF THE NAVY — NAVAL FACILITIES ENGINEERING COMMAND
NAVY PUBLIC WORKS CENTER
NAVAL STATION — NORFOLK, VIRGINIA

NAVAL STATION, NORFOLK, VIRGINIA

RENOVATION OF HVAC SYSTEMS; BUILDING C-9

DETAILS

JOB ORDER NO. 1325034			
DES. RMK | DR. CAD | CHK. BDW			
BR. MGR. RDF			
SUPERVISED BY FIRM MEMBER / PRINCIPAL			
EIC S. KATEPALLI, P.E.			
DIV. DIR. R.H. IVES JR., P.E.			
APPROVED: DATE: SATISFACTORY TO ACTIVITY	SIZE D	CODE ID NO. 80091	NAVFAC DRAWING NO. 4,306,029 / PWC DRAWING NO. 15271-W
APPROVED: DATE: FOR C.O. COMMANDER, NAVFAC	CONSTR. CONTR. NO. N26470-93-C-5445		
SCALE: NONE	SPEC. 05-95-2986		SHEET 24 OF 40

D C B A

8 7 6 5 4 3 2 1

AIR HANDLING UNIT SCHEDULE

AHU NO.	FAN DATA					COOLING COIL DATA-CHILLED WATER (45°F EWT)									HEATING COIL DATA-HOT WATER (180°F EWT)						O.A. CFM	REMARKS
	C.F.M.	E.S.P.	MOTOR H.P.	FAN R.P.M.	VOLTAGE/ PHASE	SENS. M.B.H.	TOTAL M.B.H.	ENT. AIR TEMP. °FDB	ENT. AIR TEMP. °FWB	LVG. AIR TEMP. °FDB	LVG. AIR TEMP. °FWB	GPM	WPD	APD	CAPACITY M.B.H.	ENT. AIR °DB	LVG. AIR °DB	GPM	WPD	APD		
1	2200	.65	1	750	208/3	53.0	78.5	78.1	66.0	56.5	54.6	16.6	6.0	.15	78.5	58.2	90.0	7.0	2.4	.06	600	①
2	1350	.50	3/4	1428	208/3	34.6	42.0	80.5	64.9	56.5	57.7	6.5	3.2	.55	45.4	59.8	90.0	2.1	4.2	.08	200	③
3	1750	.50	3/4	962	208/3	42.0	61.8	79.6	66.6	56.4	55.4	9.9	4.0	.52	64.3	57.2	90.0	3.0	10.8	.07	500	③
4	1750	.50	3/4	962	208/3	42.0	61.8	79.6	66.6	56.4	55.4	9.9	4.0	.52	64.3	57.2	90.0	3.0	10.8	.07	500	③
5	2950	.58	2	1090	208/3	93.5	158.6	82.7	70.0	53.5	52.7	40.0	35.5	.60	141.0	46.8	90.0	3.8	.5	.15	2500	③
6	2950	.58	2	1090	208/3	93.5	158.6	82.7	70.0	53.5	52.7	40.0	35.5	.60	141.0	46.8	90.0	3.8	.5	.15	2500	③
7	1750	.54	1/2	793	208/3	41.4	89.4	82.9	71.3	53.5	52.7	18.7	6.5	.17	85.0	46.4	90.0	3.4	21.3	.03	1700	③
8	1050	.50	3/4	1598	208/3	23.3	32.3	77.5	65.1	56.5	54.9	7.8	3.4	.84	33.3	61.2	90.0	2.1	3.0	.12	200	③
9	2050	.65	1 1/2	1157	208/3	47.7	78.1	75.0	65.4	53.5	52.7	21.9	16.5	.72	53.2	68.0	91.4	1.8	4.4	.09	740	⑤
10	3700	.70	3	1323	208/3	83.3	142.7	75.0	67.3	53.5	52.7	27.9	18.5	.87	112.0	68.0	95.0	3.0	.3	.22	1870	⑤
11	3700	.70	3	1323	208/3	83.3	142.7	75.0	67.3	53.5	52.7	27.9	18.5	.87	112.0	68.0	95.0	3.0	.3	.22	1870	⑤
12	2100	.75	1	820	208/3	52.3	59.2	76.3	62.4	56.5	54.0	11.9	4.5	.74	67.0	65.1	90.0	5.0	.12	.33	280	④
13	2100	.75	1	820	208/3	52.3	59.2	76.3	62.4	56.5	54.0	11.9	4.5	.74	67.0	65.1	90.0	5.0	.12	.33	140	④
14	850	.65	1/2	1466	208/3	20.1	25.9	77.8	64.4	55.8	54.5	5.8	2.0	.56	26.8	62.1	90.1	1.3	1.3	.08	160	③
15	5500	.85	5	750	208/3	153.9	249.7	79.2	67.5	53.5	52.7	38.0	10.2	.34	216.4	54.6	90.0	17.3	3.1	.07	2250	① ②
16	2260	.80	1	780	208/3	69.9	119.2	81.6	70.0	53.5	52.7	19.7	10.1	.22	102.0	49.1	90.0	7.8	2.7	.06	1560	① ②
17	2260	.80	1	780	208/3	69.9	119.2	81.6	70.0	53.5	52.7	19.7	10.1	.22	102.0	49.1	90.0	7.8	2.7	.06	1560	① ②
18	2260	.80	1	780	208/3	69.9	119.2	81.6	70.0	53.5	52.7	19.7	10.1	.22	102.7	49.1	90.0	7.8	2.7	.06	1560	① ②
19	1580	.85	1	1000	208/3	47.1	78.9	80.8	68.8	53.5	52.7	14.9	14.2	.25	69.0	25.7	90.0	4.5	1.4	.09	900	① ②
20	1580	.85	1	1000	208/3	47.1	78.9	80.0	68.8	53.5	52.7	14.9	14.2	.25	69.0	25.7	90.0	4.5	1.4	.09	900	① ②
21	2000	.75	1	735	208/3	45.1	47.5	88.0	75.4	55.3	54.6	18.1	8.8	.18	52.4	66.7	90.0	6.0	2.0	.05	60	①
22	7800	.80	7 1/2	880	208/3	241.2	423.6	81.6	70.3	53.5	52.7	48.0	10.9	.40	365.1	48.0	90.0	48.0	11.0	.39	6000	①
23	6600	.80	7 1/2	1175	208/3	145.2	174.9	76.6	63.0	56.5	54.1	31.1	7.3	.50	189.9	64.3	90.0	14.0	3.2	.15	585	①
24	1150	.70	1/4	950	208/1	25.2	29.4	76.3	63.2	56.5	54.8	7.5	3.1	.29	32.3	65.0	90.0	1.0	1.2	.06	80	⑤
25	11250	.80	10	909	208/3	271.1	461.9	79.6	69.3	57.9	56.8	92.4	11.4	.78	459.3	53.4	90.0	33.0	.17	.81	1500	⑥
26	470	.35	1/4	1095	208/1	11.8	16.6	78.3	65.7	55.6	54.2	3.4	6.2	.16	16.4	58.6	90.0	.6	.03	.3	75	⑤
27	500	.45	1/4	1102	208/1	10.4	11.9	75.0	62.0	56.5	54.0	2.0	2.4	.15	12.4	68.0	90.0	.4	.03	.1	0	③

① ROOF TOP AIR HANDLING UNIT. PROVIDE WITH FACTORY ROOF CURB.

② EXTEND SUPPLY AND RETURN DUCTWORK OVER STRUCTURAL BEAMS WITHIN ROOF CURB, PROVIDE CURB AS REQUIRED AND BLANK OFF PORTION OF CURB NOT COVERED BY UNIT.

③ HORIZONTAL CONFIGURATION FOR INSTALLATION ABOVE CEILING GRID.

④ HORIZONTAL CONFIGURATION.

⑤ VERTICAL CONFIGURATION.

⑥ BUILT-UP CENTRAL STATION AIR HANDLING UNIT.

AIR COOLED CHILLER SCHEDULE

MARK	CAPACITY (TONS)	FLOW RATE (GPM)	EWT (°F)	LWT (°F)	W.P.D. (FT)	O.A. TEMP. (°F)	UNLOADING STEPS (%)	VOLTAGE/ PHASE	MINIMUM CIRCUIT AMPS	COMPRESSORS NO.	COMPRESSORS RLA	CONDENSER FANS NO.	CONDENSER FANS FLA	CONDENSER FANS KW	REMARKS
CHLR-1	120	304.3	52	42	15	95	VARIABLE	208/3	576	2	233	10	5.1	1.0	ROTARY LIQUID CHILLER
CHLR-2	120	304.3	52	42	15	95	VARIABLE	208/3	576	2	233	10	5.1	1.0	ROTARY LIQUID CHILLER

GRILLE, REGISTER & DIFFUSER SCHEDULE

MARK	TYPE	SERVICE	NECK SIZE	P.D. IN H2O	REMARKS
Ⓐ	LOUVERED FACE	CEILING SUPPLY	15x15	.09"	FOR 24x24 LAY-IN CEILING
Ⓑ	LOUVERED FACE	CEILING SUPPLY	12x12	.09"	FOR 24x24 LAY-IN CEILING
Ⓒ	LOUVERED FACE	CEILING SUPPLY	6x6	.09"	FOR 24x24 LAY-IN CEILING
Ⓓ	DOUBLE DEFLECTION	WALL SUPPLY	36x18	.09"	0° FIN ANGLE UPWARD
Ⓔ	LOUVERED FACE	CEILING RETURN	24x24	.04"	FOR 24x24 LAY-IN CEILING
Ⓕ	LOUVERED FACE	WALL RETURN	48x18	.03"	45° FIN ANGLE DOWNWARD
Ⓖ	LOUVERED FACE	WALL RETURN	48x36	.03"	45° FIN ANGLE DOWNWARD
Ⓗ	LOUVERED FACE	CEILING SUPPLY	9x9	.09"	FOR 24x24 LAY-IN CEILING
Ⓘ	LOUVERED FACE	CEILING SUPPLY	18x18	.03"	FOR 24x24 LAY-IN CEILING

CIRCULATING PUMP SCHEDULE

MARK	TYPE	GPM	HEAD FEET	MOTOR HP	MOTOR VOLT	MOTOR Φ	RPM	EFF.	NEMA STARTER SIZE	NEMA STARTER TYPE	REMARKS
P-1	BASE MOUNTED	608.6	82.6	20	208	3	1750	80	2	1	CHILLED WATER
P-2	BASE MOUNTED	608.6	82.6	20	208	3	1750	70	2	1	STAND-BY
P-3	BASE MOUNTED	304.3	36.2	5	208	3	1750	70	1	1	CHILLER
P-4	BASE MOUNTED	304.3	36.2	5	208	3	1750	70	1	1	CHILLER
P-5	BASE MOUNTED	236.5	51.1	5	208	3	1750	70			HOT WATER

REVISIONS				
SYM	DESCRIPTION	DATE	SATISFACTORY	APPROVED BY

HOT WATER CONVERTOR SCHEDULE

MARK	WATER SIDE WATER FLOW GPM	WATER SIDE EWT °F	WATER SIDE LWT °F	WATER SIDE CAPACITY BTUH	WATER SIDE MAX PD FT	STEAM SIDE PSIG	STEAM SIDE FLOW LBS/HR	STEAM SIDE TRAP CAPACITY LBS/HR
CON-1	236.5	162.2	180.0		1.0	5	3042.6	9128

INTAKE AIR LOUVER SCHEDULE

MARK	SIZE W x H	CFM AIR FLOW	STATIC "WC	MOTORIZED DAMPER	LOCATION	REMARKS
L-1	18x30	1870	0.10	NO	WALL	4" DEEP, 20°∠ BLADES
L-2	18x18	280	0.04	NO	WALL	4" DEEP, 45°∠ BLADES
L-3	48x48	2610	0.04	NO	WALL	4" DEEP, 45°∠ BLADES
L-4	36x30	1680	0.07	NO	WALL	4" DEEP, 45°∠ BLADES
L-5	36x30	1680	0.07	NO	WALL	4" DEEP, 45°∠ BLADES

HOT WATER UNIT HEATER SCHEDULE

UNIT NO.	FAN CFM	RPM	H.P.	COIL CAPACITY MBH	COIL CAPACITY EAT	COIL CAPACITY LAT.	COIL CAPACITY GPM	COIL CAPACITY EWT	COIL CAPACITY LWT	COIL CAPACITY WPD-FT.	MIN. AIR THROW FT.	MTG. HGT.	VOLTAGE	REMARKS
UH-1	730	1550	1/12	30	50	106	4.7	180	161.7	.7	36	6-0	120	PROVIDE W/ WALL MOUNTING BRACKET

CONVECTOR HEATER SCHEDULE

MARK	ENTERING AIR °F	ENTERING WATER °F	OUTPUT BTU	FLOW RATE GPM	DIMENSIONS L x D x H	REMARKS
CONV-1	68	180	12,700	1.3	8x6x16	MOUNT AT 6" AFF

Bowman, Foster & Associates, P.C.
Consulting Engineers
192 Ballard Court, Suite 200
Virginia Beach, VA 23462

COMMONWEALTH OF VIRGINIA
R. D. Foster
10976
PROFESSIONAL ENGINEER

M-19

DEPARTMENT OF THE NAVY NAVAL FACILITIES ENGINEERING COMMAND
NAVY PUBLIC WORKS CENTER
NAVAL STATION NORFOLK, VIRGINIA

NAVAL STATION, NORFOLK, VIRGINIA

RENOVATION OF HVAC SYSTEMS; BUILDING C-9

SCHEDULES

JOB ORDER NO. 1325034
DES. RMK | DR. CAD | CHK. BDW
BR. MGR. RDF
SUBMITTED BY
FIRM MEMBER / PRINCIPAL
EIC S. KATEPALLI, P.E.
DIV. DIR. R.H. IVES JR., P.E.
APPROVED: DATE: 6/20/95
SATISFACTORY TO ACTIVITY
APPROVED: DATE: 6/30/95
FOR C.O. COMMANDER, NAVFAC

SIZE	CODE ID NO.	NAVFAC DRAWING NO.	PWC DRAWING NO.
D	80091	4,306,030	15271-X
		CONSTR. CONTR. NO. N62470-93-C-5445	
SCALE: NONE		SPEC. 05-95-2986	SHEET 25 OF 40

8 7 6 5 4 3 2 1

D C B A

REVISIONS				
SYM	DESCRIPTION	DATE	SATISFACTORY	APPROVED BY

SEQUENCE OF OPERATION

AIR HANDLING UNIT CONTROL
The DDC Controller shall energize the unit through its Optimization Program for morning warmup. During morning warmup, the minimum outside air damper shall be fully closed and the hot water valve shall be fully open to the coil.

During the occupied mode, the minimum outside air damper shall two-position fully open.

On a rise in space temperature to the heating setpoint (adjustable) of the DDC Controller, the DDC Controller shall modulate the hot water valve closed to the coil. On a continued rise in space temperature to the cooling setpoint (adjustable) of the DDC Controller, the DDC Controller shall modulate the chilled water valve open to the coil. On a fall in space temperature the reverse sequence shall occur.

On detection of products of combustion, the smoke detector shall deenergize the supply air fan and close the outside air damper and sound an alarm bell in a normally occupied area located as directed.

During the unoccupied mode, the Air Handling Unit shall be cycled at a reduced setpoint.

Theater Air Handling Unit Control Only: During the occupied mode, the DDC Controller shall modulate the outside air damper to maintain CO2 level at setpoint (adjustable) of the DDC Controller, as sensed by the CO2 sensor located in the return air.

HOT WATER SYSTEM CONTROL
Whenever the outside air temperature falls below an adjustable setpoint of the DDC Controller, the DDC Controller shall enable the hot water converter and energize the main hot water pump. On a fall in hot water supply temperature, the DDC Controller shall modulate the steam valves open to the heat exchanger. The hot water supply setpoint of the DDC Controller shall be inversely reset by outside air temperature.

During the occupied mode, the main hot water pump shall run continuously provided that the outside air temperature is below 60 degrees fahrenheit (adjustable). During the unoccupied mode, the main hot water pump shall be cycled from any zone requiring heat or whenever the outside air temperature falls below 35 degrees fahrenheit.

CHILLED WATER SYSTEM CONTROL
The DDC Controller shall energize the chiller system including: chilled water pump, chiller pump and chiller based upon an Eight day (7 plus holiday) time-of-day scheduling provided the outside air temperature is above setpoint and a space sensor has a demand for cooling.

The DDC Controller shall monitor Chiller Current Draw, Evaporator Refrigeration Temperature, and Condenser Refrigeration Temperature. Whenever the any of the above three variables reach setpoint, the DDC Controller shall generate an alarm and reset the chiller chilled water supply temperature setpoint which shall unload the compressor and, if necessary, deenergize the chiller circuit. PID Control shall be utilized for the above sequence.

The DDC Controller shall Lead/Lag the chillers to obtain maximum efficiencies out of each chiller as per the unit manufacturers instructions.

UNIT HEATER CONTROL
On a fall in space temperature to the setpoint of the thermostat, the thermostat shall cycle the unit heater to maintain setpoint.

CONVECTOR CONTROL
The self-contained valve shall modulate to maintain space temperature at setpoint.

STAND-BY PUMP
The stand-by pump shall be manually valved and actuated.

SYSTEM POINT LIST

SYSTEM POINT DESCRIPTION	ANALOG INPUT: GRAPHIC	TEMPERATURE	PRESSURE	PH	KW	GPM	CFM	CO2	PERCENT	PERCENT RLA	AMPS	ANALOG OUTPUT: DDC	SETPOINT ADJ.	BINARY INPUT: OVERRIDE	STATUS ON/OFF	FILTER STATUS	STATUS OPEN/CLOSED	STATUS	BINARY OUTPUT: ALARM	OPEN/CLOSE	LOCK OUT	ENABLE/DISABLE	SYSTEMS FEATURES ALARMS: HIGH ANALOG	LOW ANALOG	PROOF	SENSOR FAIL	FLOW FAIL	COMM. FAIL	DIAGNOSTICS	PROGRAMS: TIME SCHEDULING	OPT. START/STOP	DEMAND LIMITING	RESET	EVENT PROGRAM	DDC	ALARM INSTRUCT	MAINT. MK. ORD.	RUN TIME	EXP. MESSAGE	SET BACK/SET UP	NIGHT PURGE	TENANT BILLING	CHILLER SEQUENCING	TOTALIZING	TIMED OVERRIDE	NOTES
AHU'S 1 THRU 27																																													
SPACE	X									X				X									X	X		X				X								X						
MIXED AIR	X																						X	X		X																		
SUPPLY AIR	X																						X	X		X				X								X						
SUPPLY FAN														X				X									X																		
HW VALVE									X																																				
CW VALVE									X																																				
MIN OA																			X																									NOTE: 1
SMOKE DET																X									X																			
RETURN AIR				X																			X			X																	AHU-22 C-25

GENERAL NOTES: NOTE: 1) AHU-22 C-25 SHALL HAVE A MODULATING ECONOMIZER

SYSTEM POINT LIST

SYSTEM POINT DESCRIPTION	ANALOG INPUT: GRAPHIC	TEMPERATURE	PRESSURE	PH	KW	GPM	CFM	CO2	PERCENT	PERCENT RLA	AMPS	ANALOG OUTPUT: DDC	SETPOINT ADJ.	BINARY INPUT: PNEU. TRANSDUCER	STATUS ON/OFF	FILTER STATUS	STATUS OPEN/CLOSED	STATUS	BINARY OUTPUT: OFF/ON	OPEN/CLOSE	LOCK OUT	ENABLE/DISABLE	SYSTEMS FEATURES ALARMS: HIGH ANALOG	LOW ANALOG	PROOF	SENSOR FAIL	FLOW FAIL	COMM. FAIL	DIAGNOSTICS	PROGRAMS: TIME SCHEDULING	OPT. START/STOP	DEMAND LIMITING	RESET	EVENT PROGRAM	DDC	ALARM INSTRUCT	MAINT. MK. ORD.	RUN TIME	EXP. MESSAGE	SET BACK/SET UP	NIGHT PURGE	TENANT BILLING	CHILLER SEQUENCING	TOTALIZING	TIMED OVERRIDE	NOTES
CW SYSTEM																																												
CW PUMP P-1															X					X								X																
CW PUMP P-3															X					X								X																
CW PUMP P-4															X					X								X																
STANDBY P-2															X					X								X																
SYSTEM CWS		X																						X	X		X																
SYSTEM CWR		X																						X	X		X																
DECOUPLING		X																						X	X		X																
CHILLERS CWS		X																						X	X		X																

GENERAL NOTES:

SYSTEM POINT LIST

SYSTEM POINT DESCRIPTION	ANALOG INPUT: GRAPHIC	TEMPERATURE	PRESSURE	PH	KW	GPM	CFM	CO2	PERCENT	PERCENT RLA	AMPS	ANALOG OUTPUT: DDC	SETPOINT ADJ.	BINARY INPUT: PNEU. TRANSDUCER	STATUS ON/OFF	FILTER STATUS	STATUS OPEN/CLOSED	STATUS	BINARY OUTPUT: OFF/ON	OPEN/CLOSE	LOCK OUT	ENABLE/DISABLE	SYSTEMS FEATURES ALARMS: HIGH ANALOG	LOW ANALOG	PROOF	SENSOR FAIL	FLOW FAIL	COMM. FAIL	DIAGNOSTICS	PROGRAMS: TIME SCHEDULING	OPT. START/STOP	DEMAND LIMITING	RESET	EVENT PROGRAM	DDC	ALARM INSTRUCT	MAINT. MK. ORD.	RUN TIME	EXP. MESSAGE	SET BACK/SET UP	NIGHT PURGE	TENANT BILLING	CHILLER SEQUENCING	TOTALIZING	TIMED OVERRIDE	NOTES
HW SYSTEM																																												
HWS	X	X																	X				X	X		X																		
HWR	X	X																	X				X	X		X																		
HW PUMP P-1	X								X									X								X																		
BOILER #1	X	X																		X			X	X		X																		
BOILER #2	X	X																		X			X	X		X																		
HW RESET VLV	X								X																				X															
OUTDOOR AIR	X	X																								X																		

GENERAL NOTES: HWSYS1.DWG

SYSTEM POINT LIST

SYSTEM POINT DESCRIPTION	ANALOG INPUT: GRAPHIC	TEMPERATURE	PRESSURE	PH	KW	GPM	CFM	CO2	PERCENT	PERCENT RLA	VOLTS	AMPS	ANALOG OUTPUT: DDC	SETPOINT ADJ.	BINARY INPUT: PNEU. TRANSDUCER	STATUS ON/OFF	FILTER STATUS	STATUS OPEN/CLOSED	STATUS	BINARY OUTPUT: OFF/ON	OPEN/CLOSE	LOCK OUT	ENABLE/DISABLE	SYSTEMS FEATURES ALARMS: HIGH ANALOG	LOW ANALOG	PROOF	SENSOR FAIL	FLOW FAIL	COMM. FAIL	DIAGNOSTICS	PROGRAMS: TIME SCHEDULING	OPT. START/STOP	DEMAND LIMITING	RESET	EVENT PROGRAM	DDC	ALARM INSTRUCT	MAINT. MK. ORD.	RUN TIME	EXP. MESSAGE	SET BACK/SET UP	NIGHT PURGE	TENANT BILLING	CHILLER SEQUENCING	TOTALIZING	TIMED OVERRIDE	NOTES
CHILLER TYP OF 2																																												
CWS	X																							X	X		X																		
CWR	X																							X	X		X																		
UNIT CURRENT											X													X			X																		
UNIT VOLTAGE										X														X	X		X																		
COND REFRIG	X																							X			X																		EACH CKT
EVAP REFRIG	X																							X			X																		EACH CKT
CHILLER																					X																								
CWS SETPOINT														X	X																														
CURRENT LIMIT														X	X																														
CHILLER ALARM																				X								X																		

GENERAL NOTES:

Bowman, Foster & Associates, P.C.
Consulting Engineers
192 Ballard Court, Suite 200
Virginia Beach, VA 23462

COMMONWEALTH OF VIRGINIA
R. D. Foster
10318
PROFESSIONAL ENGINEER

M-20

DEPARTMENT OF THE NAVY NAVAL FACILITIES ENGINEERING COMMAND
NAVY PUBLIC WORKS CENTER
NAVAL STATION NORFOLK, VIRGINIA

NAVAL STATION, NORFOLK, VIRGINIA

RENOVATION OF HVAC SYSTEMS; BUILDING C-9

CONTROLS

JOB ORDER NO. 1325034
DES. RMK | DR. CAD | CHK. BDW
BR. MGR. RDF
SUBMITTED BY: R.D. Foster
FIRM MEMBER / PRINCIPAL
EIC S. KATEPALLI, P.E.
DIV. DIR. R.H. IVES JR., P.E.
APPROVED: DATE:
SATISFACTORY TO ACTIVITY
APPROVED: DATE: 4/30/96
FOR C.O. COMMANDER, NAVFAC

SIZE	CODE ID NO.	NAVFAC DRAWING NO.	PWC DRAWING NO.
D	80091	4,306,031	15271-Y
		CONSTR. CONTR. NO.	N62470-93-C-5445
SCALE: NOTED		SPEC. 05-95-2986	SHEET 26 OF 40

8 7 6 5 4 3 2 1

REVISIONS				
SYM	DESCRIPTION	DATE	SATISFACTORY	APPROVED BY

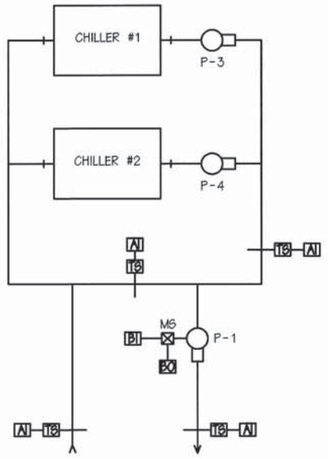

CHILLER PIPING CONTROLS

NO SCALE

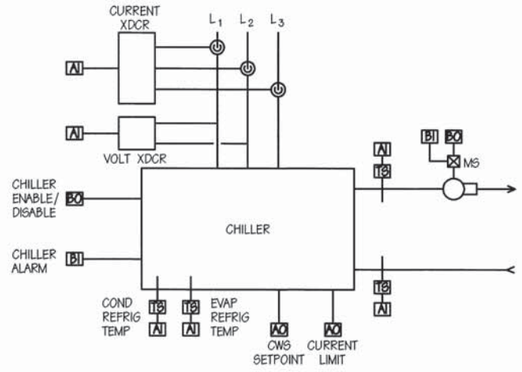

CHILLER CONTROLS (TYP OF 2)

NO SCALE

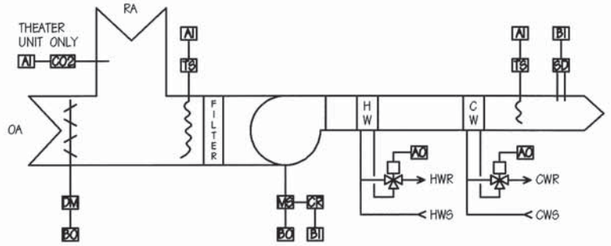

SPACE SENSOR WITH SETPOINT & PB FOR OUR

AI
BI

NOTE:
AHU-22 & 25 UNIT SHALL HAVE A MODULATING ECONOMIZER

AHU CONTROLS

NO SCALE

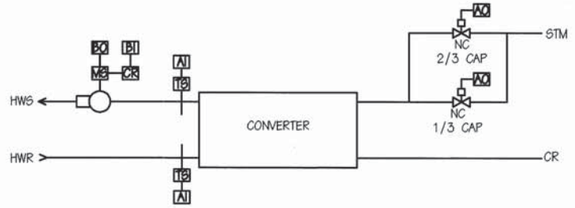

CONVERTER CONTROLS

NO SCALE

EMCS LEGEND

- EMCS — SIGNAL TRANSMITTED TO EMCS
- EMCS — SIGNAL RECIEVED FROM EMCS
- A — ALARM CONTACT SIGNAL
- P — PRESSURE INDICATION
- LV — LEVEL INDICATION
- O — ON-OFF STATUS SIGNAL
- DP — DIFFERENTIAL PRESSURE SWITCH
- R — CONTROLLER RESET INTERFACE
- S — START-STOP INTERFACE
- T — TEMPERATURE INDICATION
- W — HUMIDITY INDICATION
- PS — POSITION
- TC — TEMPERATIRE CONTROLLER
- STR — MOTOR STARTER
- SENSOR INSTALLED IN THERMOMETER WELL
- SENSOR INSTALLED IN DUCT OR PIPE
- SA — SUPPLY AIR
- RA — RETURN AIR
- OA — OUTSIDE AIR
- MA — MIXED AIR
- OAD — OUTSIDE AIR DAMPER

Bowman, Foster & Associates, P.C.
Consulting Engineers
192 Ballard Court, Suite 200
Virginia Beach, VA 23462

COMMONWEALTH OF VIRGINIA
B. D. Foster
10316
PROFESSIONAL ENGINEER

M-21

DEPARTMENT OF THE NAVY NAVAL FACILITIES ENGINEERING COMMAND
NAVY PUBLIC WORKS CENTER
NAVAL STATION NORFOLK, VIRGINIA

NAVAL STATION, NORFOLK, VIRGINIA

RENOVATION OF HVAC SYSTEMS; BUILDING C-9

CONTROLS

JOB ORDER NO.	1325034
DES. RMK | DR. CAD | CHK. BDW	
BR. MGR.	RDF
SUBMITTED BY	
FIRM MEMBER / PRINCIPAL	
EIC	S. KATEPALLI, P.E.
DIV. DIR.	R.H. IVES JR., P.E.
APPROVED: DATE:	
SATISFACTORY TO ACTIVITY	
APPROVED: DATE: 6/30/95	
FOR C.O. COMMANDER, NAVFAC	

SIZE	CODE ID NO.	NAVFAC DRAWING NO.	PWC DRAWING NO.
D	80091	4,306,032	15271-Z
		CONSTR. CONTR. NO.	N62470-93-C-5445
SCALE: NOTED		SPEC. 05-95-2986	SHEET 27 OF 40

8 7 6 5 4 3 2 1

D C B A