J-50 Record Drawings

DEMOLITION WORK NOTES

1. REMOVE EXISTING FINNED TUBE CONVECTOR, PIPING, INSULATION AND SUPPORTS.
2. REMOVE EXISTING STEAM UNIT HEATER, PIPING, INSULATION AND SUPPORTS.
3. REMOVE EXISTING WALL EXHAUST FAN AND GRILLE. SEE ARCHITECTURAL DRAWINGS FOR PATCHING OF WALL.
4. REMOVE EXISTING FLOOR DRAIN, TRAP & SANITARY PIPING.
5. REMOVE EXISTING LAVATORY, FAUCET, SANITARY PIPING, DOMESTIC WATER PIPING AND SUPPORTS. SEE PHOTOS ON SHEET M-44 FOR LIMITS OF DEMOLITION.
6. REMOVE EXISTING WATER CLOSET AND STORE FOR REINSTALLATION AFTER NEW FLOOR COVERING IS INSTALLED.
7. REMOVE EXISTING ELECTRIC WATER COOLER.
8. REMOVE EXISTING EXHAUST GRILLE AND DUCTWORK.
9. REMOVE EXISTING THRU-WALL AIR CONDITIONING UNIT, SUPPORTS AND CONDENSATE DRAIN PIPING. SEE ARCHITECTURAL DRAWINGS FOR PATCHING OF WALL. THRU-WALL UNIT SHALL REMAIN THE PROPERTY OF THE GOVERNMENT AND SHALL BE DELIVERED TO GOVERNMENT STORAGE WITHIN A 1-MILE RADIUS OF THE PROJECT SITE.
10. REMOVE EXISTING STEAM AND (OR) CONDENSATE PIPING, INSULATION AND SUPPORTS.
11. REMOVE EXISTING FLOOR MOUNTED URINAL, FLUSH VALVE, SANITARY PIPING, VENT PIPING AND C.W. PIPING.
12. REMOVE EXISTING WALL MOUNTED AIR HANDLING UNIT, DUCTWORK AND SUPPORTS.
13. EXISTING SANITARY PIPE TO REMAIN.
14. REMOVE EXISTING FLOOR DRAIN & TRAP.
15. REMOVE EXISTING SHOWER HEAD & MIXING VALVE. REMOVE HOT WATER & COLD WATER UP TO SHUTOFF VALVES (3FT±).
16. REMOVE EXISTING WINDOW AIR CONDITIONING UNIT, SUPPORTS AND CONDENSATE DRAIN PIPING. SEE ARCHITECTURAL DRAWINGS FOR PATCHING OF WALL.
17. EXISTING FINNED TUBE CONVECTOR, PIPING, INSULATION AND SUPPORTS TO REMAIN.
18. EXISTING STEAM UNIT HEATER, PIPING, INSULATION AND SUPPORTS TO REMAIN.
19. EXISTING WALL EXHAUST FAN AND GRILLE SHALL REMAIN.
20. EXISTING LAVATORY, FAUCET, SANITARY PIPING, DOMESTIC WATER PIPING AND SUPPORTS.
21. EXISTING WATER CLOSET AND FLUSH VALVE TO REMAIN.
22. EXISTING ELECTRIC WATER COOLER TO REMAIN.
23. EXISTING EXHAUST GRILLE AND DUCTWORK TO REMAIN.
24. EXISTING AIR HANDLING UNIT, DUCTWORK, DIFFUSERS, AND INSULATION TO REMAIN.
25. EXISTING FLOOR MOUNTED URINAL, FLUSH VALVE, SANITARY PIPING, VENT PIPING AND C.W. PIPING.
26. EXISTING FAN COIL UNIT TO REMAIN.
27. EXISTING CONDENSATE PIPING (BELOW GRADE) TO REMAIN.
28. EXISTING COOLING WELL TO REMAIN.
29. REMOVE EXISTING STEAM AND (OR) CONDENSATE PIPING, INSULATION, SUPPORTS AND STEAM TRAPS.
30. EXISTING STEAM PIPING (LOCATED BELOW GRADE) TO REMAIN.
31. CAP PIPING BELOW FINISHED FLOOR AND PATCH FLOOR TO MATCH EXISTING ADJACENT FLOOR SURFACE.
32. EXISTING 4" LPS RISER TO "B" WING TO REMAIN.
33. CAP EXISTING CONDENSATE PIPE BELOW FINISHED FLOOR. PATCH FLOOR TO MATCH EXISTING ADJACENT SURFACE. (TYPICAL FOR ALL CONDENSATE RISER IN "B" WING.)
34. EXISTING CONDENSATE PIPING TO REMAIN. (TYPICAL FOR ALL CONDENSATE RISER IN "B" WING.)
35. REMOVE EXISTING EXPOSED CONDENSATE PIPING ON EXTERIOR OF BUILDING. CAP 12" BELOW GRADE.
36. REMOVE EXISTING ROOF MOUNTED EXHAUST FAN AND CURB.
37. EXISTING FINNED TUBE RADIATION UNIT TO REMAIN. SEE "2ND FLOOR A & B CENTER WING TYPICAL STEAM FINNED TUBE RADIATION UNIT DEMOLITION DETAIL", ON SHEET M-43.
38. REMOVE EXISTING EXHAUST GRILLE. BLANK OFF EXISTING DUCT AND PATCH WALL.
39. EXISTING DUCTWORK TO REMAIN.
40. REMOVE EXISTING EXHAUST GRILLE.
41. REMOVE EXISTING FINNED TUBE RADIATION UNIT. REMOVE LPC DOWN TO 2ND FLOOR UNIT. SEE "2ND FLOOR A & B CENTER WING TYPICAL STEAM FINNED TUBE RADIATION UNIT DEMOLITION DETAIL", ON SHEET M-43 FOR LIMITS OF DEMOLITION.
42. EXISTING LPS TO REMAIN.
43. EXISTING EXHAUST FAN TO REMAIN.

NOTE:
MATERIALS IN THIS BUILDING HAVE BEEN TESTED AND FOUND TO BE ASEBESTOS CONTAINING MATERIALS AND LEAD BASED PAINT. THESE MATERIALS SHALL BE REMOVED AND DISPOSED OF ACCORDING TO SPECIFICATIONS AND DRAWINGS IN SPECIFICATION SECTIONS 02080 AND 02090.

NEW WORK NOTES

1. PROVIDE COUNTER TOP LAVATORY P-2 AND FAUCET (TYPICAL FOR 13). RUN H.W., C.W., SANITARY AND VENT PIPING CONCEALED UNDER COUNTER TOP. SEE M-34 & M-35 FOR RISER DIAGRAMS.
2. REINSTALL EXISTING WATER CLOSET AND FLUSH VALVE AFTER NEW FLOORING IS INSTALLED. (TYPICAL FOR 12). ADJUST HEIGHT OF EXISTING SANITARY PIPING AND CW CONNECTIONS TO ACCOMMODATE NEW FINISHED FLOOR ELEVATION.
3. PROVIDE FLOOR DRAIN FD-1 & SANITARY PIPING. INSTALL TRAP AND SANITARY PIPING AS HIGH AS POSSIBLE TO AVOID CONFLICT WITH NEW CEILING.
4. PROVIDE URINAL P-2, FLUSH VALVE, C.W., SANITARY AND VENT PIPING. (TYPICAL FOR 7) RUN ALL PIPING CONCEALED IN CHASE. SEE M-34 & M-35 FOR RISER DIAGRAMS.
5. PROVIDE SANITARY AND VENT STACK FOR URINALS. SEE M-34 FOR RISER DIAGRAMS.
6. PROVIDE H.W., C.W., SANITARY AND VENT RISERS FOR LAVATORIES. SEE SHEET M-34 & M-35 FOR RISER DIAGRAMS.
7. PROVIDE SHOWER HEAD AND MIXING VALVE. SEE SHEET M-35 FOR RISER DIAGRAM.
8. PROVIDE C.W. RISER FOR URINALS. SEE SHEET M-35 FOR RISER DIAGRAMS.
9. HWS AND HWR RISERS IN CHASE FOR C-1.
10. PROVIDE EXHAUST DUCT IN CHASE UP TO EXHAUST FAN EF-1 ON ROOF.
11. HWS AND HWR RISER UP AND DOWN FOR UH-1.
12. PROVIDE EXHAUST DUCT IN CHASE UP TO EXHAUST FAN EF-2 ON ROOF.
13. UNIT HEATER UH-1. SEE DETAIL, SHEET M-1.
14. PROVIDE EXHAUST DUCT IN CHASE UP TO EXHAUST FAN EF-3 ON ROOF.
15. RUN ABOVE NEW CEILING.
16. PROVIDE FD-1 AND TRAP. INSTALL TRAP AS HIGH AS POSSIBLE TO AVOID CONFLICT WITH NEW CEILING.
17. PROVIDE P-1 ELECTRIC WATER COOLER. CONNECT SANITARY AND COLD WATER PIPING TO SANITARY AND COLD WATER PIPING UNDER LAVATORIES. SEE SHEET M-34 & M-35 FOR RISER DIAGRAMS.
18. PROVIDE SHOWER FLOOR DRAIN FD-2 AND SANITARY PIPING. INSTALL TRAP AND SANITARY PIPING AS HIGH AS POSSIBLE TO AVOID CONFLICT WITH NEW CEILING.
19. CHS AND CHR UP AND DOWN.
20. PROVIDE COUNTER TOP LAVATORY P-2 AND FAUCET (TYPICAL FOR 13). RUN H.W., C.W., SANITARY AND VENT PIPING CONCEALED UNDER COUNTER TOP.
21. PROVIDE FLOOR DRAIN FD-1 & TRAP. INSTALL TRAP AND SANITARY PIPING AS HIGH AS POSSIBLE TO AVOID CONFLICT WITH NEW CEILING.
22. H.W., C.W., SANITARY & VENT IN CHASE FOR LAVATORIES.
23. HWS IN CHASE FOR C-1.
24. HWR IN CHASE FOR C-1.
25. PROVIDE SHOWER HEAD & MIXING VALVE.
26. EXISTING VENT STACK.
27. PROVIDE WASHING MACHINE HOOK UP BOX WITH CONNECTIONS FOR WORKING MACHINE .
28. PROVIDE 4"Ø DRYER EXHAUST DUCT & WALL CAP. RUN DUCT ABOVE NEW CEILING.
29. PROVIDE SANITARY & VENT STACK.
30. PROVIDE C.W., CONNECT TO EXISTING C.W.

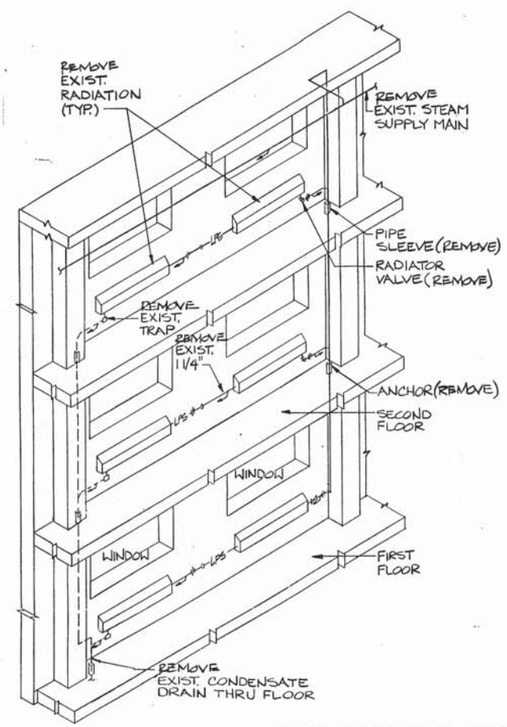

TYPICAL STEAM RADIATOR DEMOLITION DETAIL
NO SCALE

GENERAL DEMOLITION NOTES

1. CONTRACTOR SHALL VERIFY ALL DIMENSIONS AND PIPE SIZES IN THE FIELD.
2. ALL MATERIALS NOTED ARE NEW UNLESS SPECIFICALLY NOTED AS EXISTING. ALL MATERIALS NOTED AS EXISTING SHALL REMAIN UNLESS SPECIFICALLY NOTED TO BE REMOVED.
3. ALL EXISTING MATERIALS TO REMAIN WHICH ARE DAMAGED OR OTHERWISE DISTURBED BY THE CONTRACTOR'S OPERATIONS SHALL BE PATCHED AND/OR REPAIRED TO MATCH ADJACENT MATERIAL AND TO MAKE REPAIR IMPERCEPTIBLE.
4. PATCH OPENINGS IN EXISTING FLOORS, WALLS OR CEILINGS, LEFT VACANT AFTER DEMOLITION OF EXISTING PIPING, EQUIPMENT AND/OR DUCTWORK TO MATCH ADJACENT MATERIALS. REMOVE ALL HANGERS AND SUPPORTS. RE-USE OF EXISTING AND/OR CONCRETE INSERTS IS PROHIBITED.

MECHANICAL ABBREVIATIONS

BLDG	BUILDING
CFM	CUBIC FEET PER MINUTE
CHR	CHILLED/HOT RETURN
CHS	CHILLED/HOT SUPPLY
CONC	CONCRETE
COND	CONDENSATE
CWR	CHILLED WATER RETURN
CWS	CHILLED WATER SUPUPLY
DB	DRY BULB
DIA.	DIAMETER
EAT	ENTERING AIR TEMPERATURE
E.F.	EXHAUST FAN
ESP	EXTERNAL STATIC PRESSURE
EWC	ELECTRIC WATER COOLER
E.W.T.	ENTERING WATER TEMPERATURE
EXIST.	EXISTING
F	DEGREES FAHRENHEIT
FT.	FEET
F. VEL	FACE VELOCITY
GPM	GALLONS PER MINUTE
H.P.	HORSE POWER
HR	HOUR
IN	INCHES
KW	KILOWATTS
LAT	LEAVING AIR TEMPERATURE
LB	POUNDS
LWT	LEAVING WATER TEMPERATURE
LRA	LOCKED ROTOR AMPS
MAX	MAXIMUM
MECH	MECHANICAL
MIN.	MINIMUM
O.C.	ON CENTER
PD	PRESSURE DROP
PHWS	PROCESSED HOT WATER SUPPLY
PSI	POUNDS PER SQUARE INCH
QTY	QUANTITY
RPM	REVOLUTIONS PER MINUTE
SAN	SANITARY
SEN	SENSIBLE
S.P.	STATIC PRESSURE
TDH	TOTAL DYNAMIC HEAD
TEMP.	TEMPERATURE
TYP.	TYPICAL
V	VOLTS
WB	WET BULB
WC	WATER COLUMN

REVISIONS

SYM	DESCRIPTION	DATE	SATISFACTORY	APPROVED BY

MECHANICAL LEGEND

	REMOVAL LIMIT
	CONNECT NEW TO EXISTING
	UNION
	GATE VALVE
	CHECK VALVE
	GLOBE VALVE
	STRAINER
	BUTTERFLY VALVE
LPC	LOW PRESSURE CONDENSATE
LPS	LOW PRESSURE STEAM (5 PSI)
HPS	HIGH PRESSURE STEAM (125 PSI)
CHR	CHILLED/HOT WATER RETURN
CHS	CHILLED/HOT WATER SUPPLY
CWR	CHILLED WATER RETURN
CWS	CHILLED WATER SUPPLY
HWS	HOT WATER SUPPLY
HWR	HOT WATER RETURN
PHWS	PRIMARY HOT WATER SUPPLY
MAU-1	MAKE-UP AIR HANDLING UNIT DESIGNATION
HX-1	HEAT EXCHANGER DESIGNATION
C-1	CONVECTOR DESIGNATION
EF-1	EXHAUST FAN DESIGNATION
P-1	PLUMBING FIXTURE DESIGNATION
T	THERMOSTAT
CP-1	CIRCULATING PUMP DESIGNATION
CH-1	CHILLER DESIGNATION
UH-1	UNIT HEATER DESIGNATION
SWH-1	STEAM WATER HEATER DESIGNATION
	DOOR LOUVER
	THREE WAY CONTROL VALVE
	PRESSURE REDUCING VALVE
A 250	DIFFUSER, REGISTER OR GRILLE DESIGNATION WITH CFM NOTED
	DOMESTIC COLD WATER(CW)
	DOMESTIC HOT WATER(HW)
	FLEXIBLE CONNECTION
	PRESSURE GAUGE
	TEMPERATURE INDICATOR
	CIRCUIT SENSOR
FCU-1	FAN COIL UNIT DESIGNATION
AHU-1	AIR HANDLING UNIT DESIGNATION
	DUCTWORK ELBOW WITH TURNING VANES
	SPLITTER DAMPER
	OPPOSED BLADE BALANCING DAMPER
	FLEXIBLE CONNECTION
	VOLUME DAMPER
FD	FIRE DAMPER
P-6 M-46	PHOTO DETAIL P-6 LOCATED ON SHEET M-46

M-1

HANBURY EVANS NEWILL VLATTAS
120 ATLANTIC STREET
NORFOLK, VIRGINIA 23510

MARABLE STRIFFLER & ASSOCIATES, P.C.
440 VIKING DR. SUITE 100
VA. BEACH VA. 23452
(804) 340-4441

COMMONWEALTH OF VIRGINIA
PETER C. STRIFFLER
No. 10465
PROFESSIONAL ENGINEER
#92005

JOB ORDER NO. 1250554
DES. PCS DR. JES CHK. GJM
BR. MGR.
SUBMITTED BY: DATE: 8/3/92
FIRM MEMBER / PRINCIPAL
BC D. RIGGS
DIV. DIR. R. IVES
APPROVED: DATE: 7/14/92
SATISFACTORY TO ACTIVITY
APPROVED: DATE: 7/24/92
FOR C.O. BY COMMANDER, NAVFAC

DEPARTMENT OF THE NAVY — NAVAL FACILITIES ENGINEERING COMMAND
NAVY PUBLIC WORKS CENTER
NAVAL STATION — NORFOLK, VIRGINIA

NAVAL STATION
NORFOLK VIRGINIA

INTERIOR AND EXTERIOR REPAIRS TO J-50

LEGEND, DETAILS AND NOTES

SIZE	CODE IDENT NO.	NAVFAC DRAWING NO.	PWC DRAWING NO.
D	80091	4,251,694	14335BG
		CONSTR. CONTR. NO. N62470-91-B-0243	
SCALE: GRAPHIC		SPEC. 05-91-0243	SHEET 60 OF 126

REVISIONS				
SYM	DESCRIPTION	DATE	SATISFACTORY	APPROVED BY

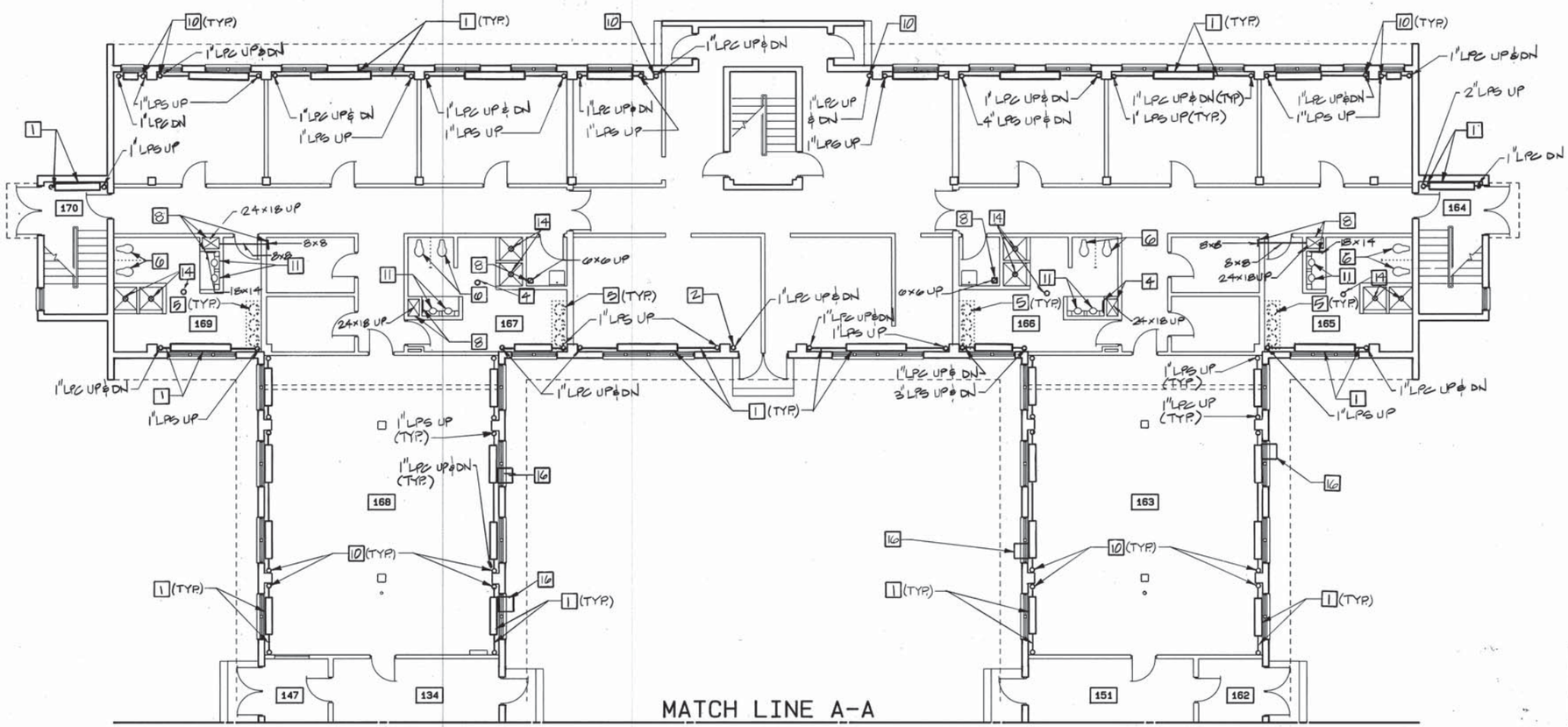

FIRST FLOOR PLAN - WING E MECHANICAL

SCALE : 1/8" = 1'- 0"

NOTE:

MATERIALS IN THIS BUILDING HAVE BEEN TESTED AND FOUND TO BE ASEBESTOS CONTAINING MATERIALS AND LEAD BASED PAINT. THESE MATERIALS SHALL BE REMOVED AND DISPOSED OF ACCORDING TO SPECIFICATIONS AND DRAWINGS IN SPECIFICATION SECTIONS 02080 AND 02090.

N

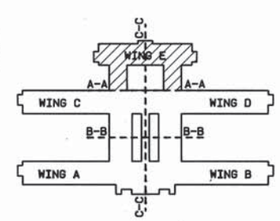

KEY PLAN

NOT TO SCALE

GRAPHIC SCALES:

SCALE: 1/8"

0 2 4 8 16 24

NOTES THIS SHEET

1. SEE SHEET M-1 FOR "DEMOLITION WORK NOTES."
2. SEE SHEET M-1 FOR "NEW WORK NOTES."

M-6

HANBURY EVANS NEWILL VLATTAS
120 ATLANTIC STREET
NORFOLK, VIRGINIA 23510

MARABLE STRIFFLER & ASSOCIATES, P.C.
440 VIKING DR. SUITE 100
VA. BEACH VA. 23452
(804) 340-4441

COMMONWEALTH OF VIRGINIA
PETER C. STRIFFLER
No. 10463
PROFESSIONAL ENGINEER
3/3/92
492005

JOB ORDER NO. 1250554
DES. PCS DR. JES CHK. GJM
BR. MGR.
SUBMITTED BY: DATE: 3/3/92
FIRM MEMBER / PRINCIPAL
EIC D. RIGGS F.P. 918
DIV.DIR. R. IVES
APPROVED: DATE: 07/14/92
SATISFACTORY TO ACTIVITY
APPROVED: DATE: 7/24/92
FOR C.O. FOR COMMANDER, NAVFAC

DEPARTMENT OF THE NAVY — NAVAL FACILITIES ENGINEERING COMMAND
NAVY PUBLIC WORKS CENTER
NAVAL STATION — NORFOLK, VIRGINIA

NAVAL STATION
NORFOLK VIRGINIA

INTERIOR AND EXTERIOR REPAIRS TO J-50

FIRST FLOOR PLAN - WING E - MECHANICAL DEMOLITION

SIZE	CODE IDENT NO.	NAVFAC DRAWING NO.	PWC DRAWING NO.
D	80091	4,251,699	14335BL
		CONSTR. CONTR. NO. N62470-91-B-0243	
SCALE: GRAPHIC		SPEC. 05-91-0243	SHEET 65 OF 126

REVISIONS				
SYM	DESCRIPTION	DATE	SATISFACTORY	APPROVED BY

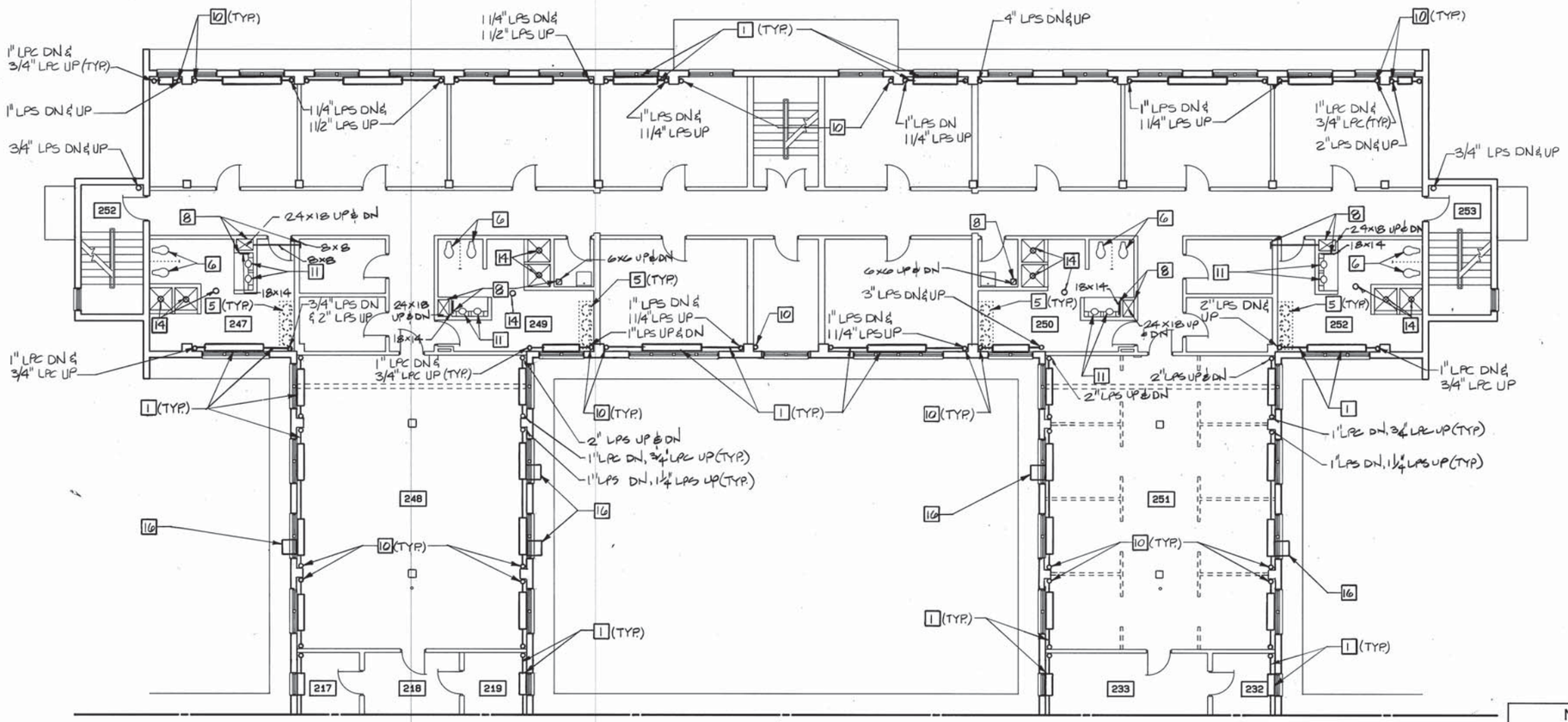

MATCH LINE A-A

NOTES THIS SHEET
1. SEE SHEET M-1 FOR "DEMOLITION WORK NOTES."
2. SEE SHEET M-1 FOR "NEW WORK NOTES."

SECOND FLOOR PLAN - WING E MECHANICAL

SCALE : 1/8" = 1'- 0"

N

NOTE:

MATERIALS IN THIS BUILDING HAVE BEEN TESTED AND FOUND TO BE ASEBESTOS CONTAINING MATERIALS AND LEAD BASED PAINT. THESE MATERIALS SHALL BE REMOVED AND DISPOSED OF ACCORDING TO SPECIFICATIONS AND DRAWINGS IN SPECIFICATION SECTIONS 02080 AND 02090.

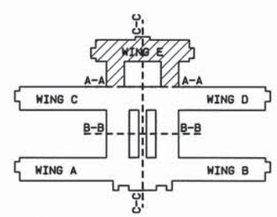

KEY PLAN

NOT TO SCALE

GRAPHIC SCALES:

SCALE: 1/8" 0 2 4 8 16 24

MARABLE STRIFFLER & ASSOCIATES, P.C.
440 VIKING DR. SUITE 100
VA. BEACH, VA. 23452
(804) 340-4441

COMMONWEALTH OF VIRGINIA
PETER C. STRIFFLER
No. 10463
PROFESSIONAL ENGINEER
#92005

HANBURY EVANS NEWILL VLATTAS
120 ATLANTIC STREET
NORFOLK, VIRGINIA 23510

JOB ORDER NO. 1250554
DES. PCS DR. JES CHK. GJM
BR. MGR.
SUBMITTED BY: DATE: 8/3/92
FIRM MEMBER / PRINCIPAL
EIC D. RIGGS F.P. 90%
DIV. DIR. R. IVES
APPROVED: DATE: 07/14/92
SATISFACTORY TO ACTIVITY
APPROVED: DATE: 7/29/92
FOR C.O. FOR COMMANDER, NAVFAC

DEPARTMENT OF THE NAVY — NAVAL FACILITIES ENGINEERING COMMAND
NAVY PUBLIC WORKS CENTER
NAVAL STATION — NORFOLK, VIRGINIA

NAVAL STATION
NORFOLK VIRGINIA

INTERIOR AND EXTERIOR REPAIRS TO J-50

SECOND FLOOR PLAN - WING E - MECHANICAL DEMOLITION

SIZE	CODE IDENT NO.	NAVFAC DRAWING NO.	PWC DRAWING NO.
D	80091	4,253,904	14335BQ
		CONSTR. CONTR. NO. N62470-91-B-0243	
SCALE: GRAPHIC		SPEC. 05-91-0243	SHEET 70 OF 126

M-11

REVISIONS				
SYM	DESCRIPTION	DATE	SATISFACTORY	APPROVED BY

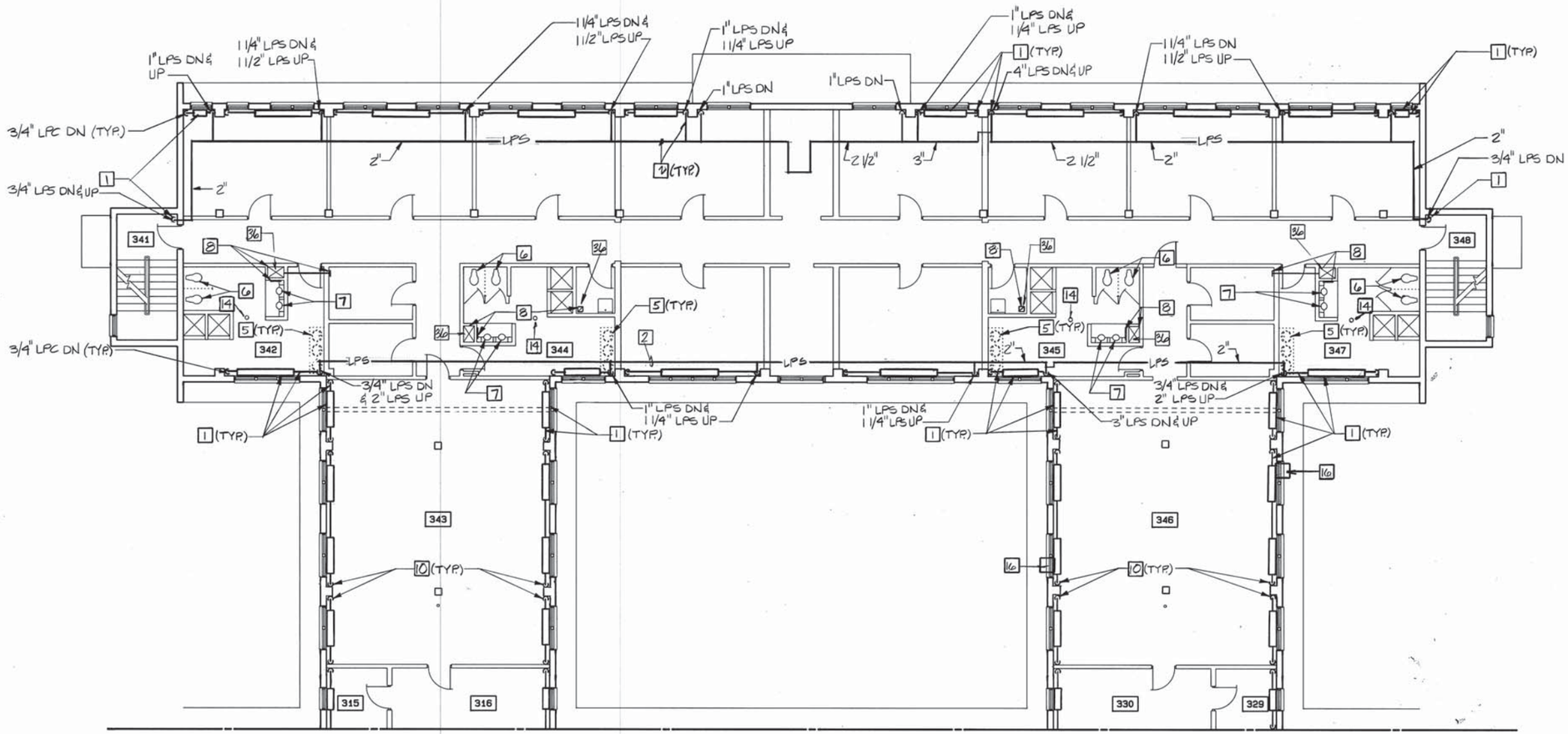

MATCH LINE A-A

NOTES THIS SHEET
1. SEE SHEET M-1 FOR "DEMOLITION WORK NOTES."
2. SEE SHEET M-1 FOR "NEW WORK NOTES."

THIRD FLOOR PLAN - WING E MECHANICAL

SCALE : 1/8" = 1'- 0"

N

NOTE:

MATERIALS IN THIS BUILDING HAVE BEEN TESTED AND FOUND TO BE ASEBESTOS CONTAINING MATERIALS AND LEAD BASED PAINT. THESE MATERIALS SHALL BE REMOVED AND DISPOSED OF ACCORDING TO SPECIFICATIONS AND DRAWINGS IN SPECIFICATION SECTIONS 02080 AND 02090.

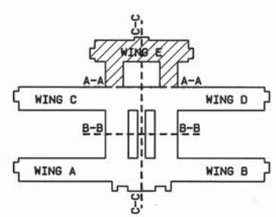

KEY PLAN

NOT TO SCALE

GRAPHIC SCALES:

SCALE: 1/8"

0 2 4 8 16 24

MARABLE STRIFFLER & ASSOCIATES, P.C.
440 VIKING DR. SUITE 100
VA. BEACH VA. 23452
(804) 340-4441

COMMONWEALTH OF VIRGINIA
PETER G. STRIFFLER
No. 10465
PROFESSIONAL ENGINEER
492005

HANBURY EVANS NEWILL VLATTAS
120 ATLANTIC STREET
NORFOLK, VIRGINIA 23510

JOB ORDER NO. 1250554
DES. RCS DR. JES CHK. GJM
BR. MGR.
SUBMITTED BY: DATE: 8/2/92
FIRM MEMBER PRINCIPAL
EIC D. RIGGS F.P.
DIV.DIR. R. IVES
APPROVED: DATE: 8/14/92
SATISFACTORY TO ACTIVITY
APPROVED: DATE: 9/24/92
FOR C.O. FOR COMMANDER, NAVFAC

DEPARTMENT OF THE NAVY NAVAL FACILITIES ENGINEERING COMMAND
NAVY PUBLIC WORKS CENTER
NAVAL STATION NORFOLK, VIRGINIA

NAVAL STATION
NORFOLK VIRGINIA

INTERIOR AND EXTERIOR REPAIRS TO J-50

THIRD FLOOR PLAN - WING E - MECHANICAL DEMOLITION

SIZE	CODE IDENT NO.	NAVFAC DRAWING NO.	PWC DRAWING NO.
D	80091	4,253,909	14335BV
		CONSTR. CONTR. NO. N62470-91-B-0243	
SCALE: GRAPHIC		SPEC. 05-91-0243	SHEET 75 OF 126

M-16

REVISIONS				
SYM	DESCRIPTION	DATE	SATISFACTORY	APPROVED BY

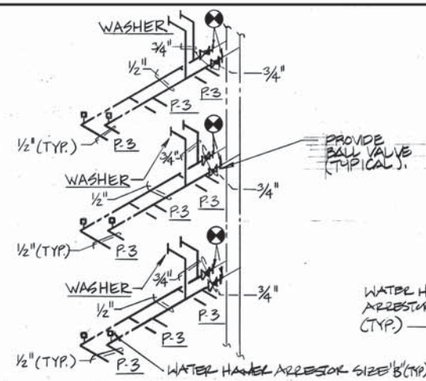

LAVATORIES & WASHERS

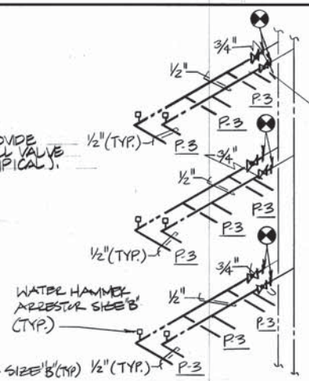

LAVATORIES

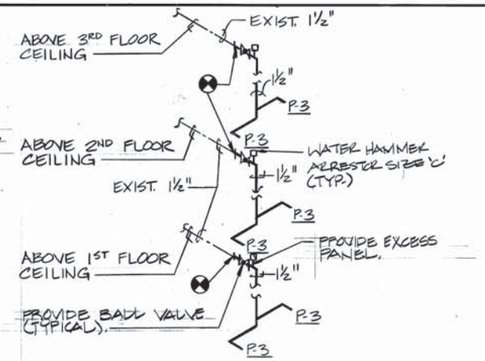

URINALS

H.W. & C.W. RISER DIAGRAMS

NO SCALE (WING E)

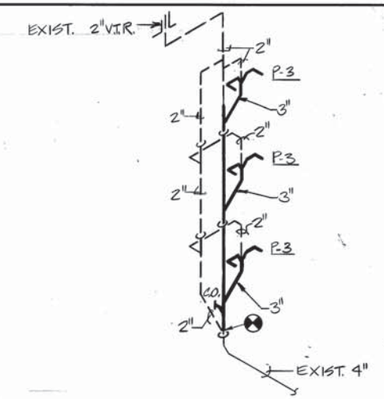

SANITARY RISER DIAGRAM - URINALS

NO SCALE (WING E)

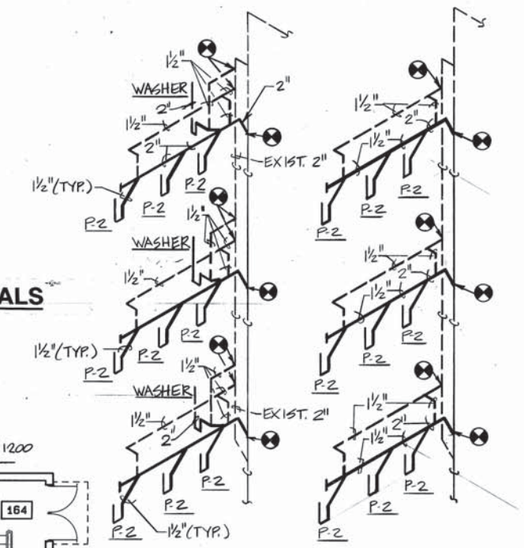

LAVATORIES & WASHERS

LAVATORIES

SANITARY RISER DIAGRAMS

NO SCALE (WING E)

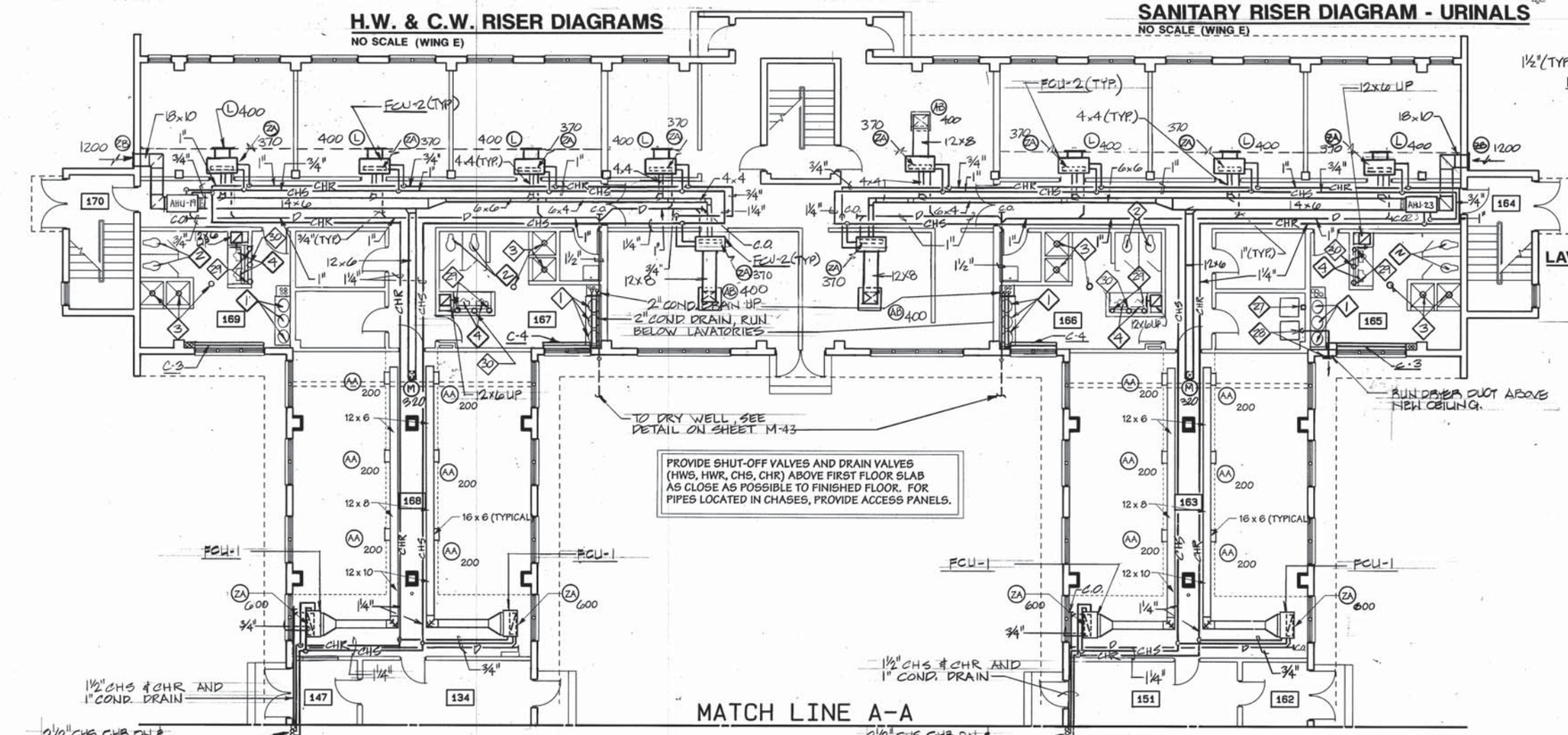

FIRST FLOOR PLAN - WING E MECHANICAL

SCALE : 1/8" = 1'- 0"

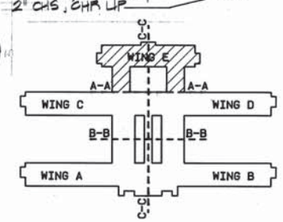

KEY PLAN

NOT TO SCALE

GRAPHIC SCALES:

SCALE: 1/8"

0 2 4 8 16 24

NOTES THIS SHEET

1. SEE SHEET M-1 FOR "DEMOLITION WORK NOTES."
2. SEE SHEET M-1 FOR "NEW WORK NOTES."

M-22

HANBURY EVANS NEWILL VLATTAS
120 ATLANTIC STREET
NORFOLK, VIRGINIA 23510

MARABLE STRIFFLER & ASSOCIATES, P.C.
440 VIKING DR. SUITE 100
VA. BEACH VA. 23452
(804) 340-4441

COMMONWEALTH OF VIRGINIA
PETER C. STRIFFLER
No. 10465
PROFESSIONAL ENGINEER
#92005

JOB ORDER NO. 1250554
DES. PCS DR. JES CHK. GJM
BR. MGR.
SUBMITTED BY: DATE: 8/3/92
FIRM MEMBER PRINCIPAL
EIC D. RIGGS F.P. 9/18
DIV. DIR. R. IVES
APPROVED: DATE: 8/14/92
SATISFACTORY TO ACTIVITY
APPROVED: DATE: 7/24/92
FOR C.O. FOR COMMANDER, NAVFAC

DEPARTMENT OF THE NAVY — NAVAL FACILITIES ENGINEERING COMMAND
NAVY PUBLIC WORKS CENTER
NAVAL STATION — NORFOLK, VIRGINIA
NAVAL STATION
NORFOLK VIRGINIA

INTERIOR AND EXTERIOR REPAIRS TO J-50

FIRST FLOOR PLAN - WING E - MECHANICAL

SIZE	CODE IDENT NO.	NAVFAC DRAWING NO.	PWC DRAWING NO.
D	80091	4,253,915	14335CB

CONSTR. CONTR. NO. N62470-91-B-0243

SCALE: GRAPHIC — SPEC. 05-91-0243 — SHEET 83 OF 126

REVISIONS				
SYM	DESCRIPTION	DATE	SATISFACTORY	APPROVED BY

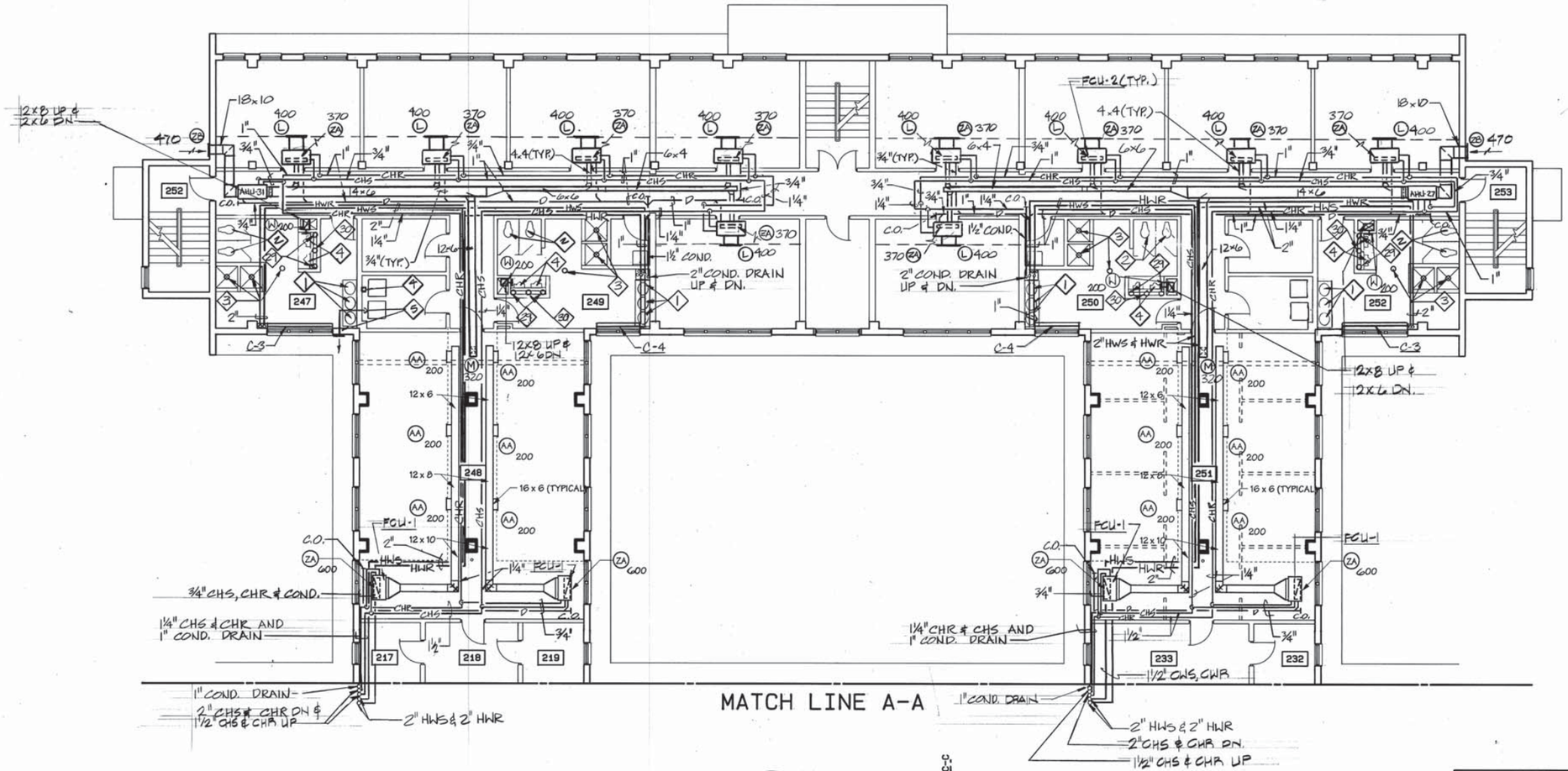

SECOND FLOOR PLAN - WING E MECHANICAL

SCALE : 1/8" = 1'- 0"

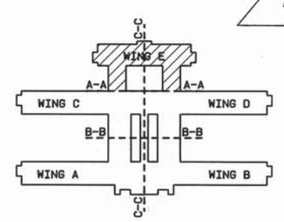

KEY PLAN

NOT TO SCALE

GRAPHIC SCALES:

SCALE: 1/8"

0 2 4 8 16 24

NOTES THIS SHEET
1. SEE SHEET M-1 FOR "DEMOLITION WORK NOTES."
2. SEE SHEET M-1 FOR "NEW WORK NOTES."

M-27

HANBURY EVANS NEWILL VLATTAS
120 ATLANTIC STREET
NORFOLK, VIRGINIA 23510

MARABLE STRIFFLER & ASSOCIATES, P.C.
440 VIKING DR. SUITE 100
VA. BEACH VA. 23452
(804) 340-4441

JOB ORDER NO. 1250554
DES. PCS DR. JES CHK. GJM
BR. MGR.
SUBMITTED BY: DATE: 8/3/92
FIRM MEMBER PRINCIPAL
EIC D. RIGGS F.P. 9CR
DIV.DIR. R. IVES
APPROVED: DATE: 07/14/92
SATISFACTORY TO ACTIVITY
APPROVED: DATE: 9/24/92
FOR C.O. FOR COMMANDER, NAVFAC

COMMONWEALTH OF VIRGINIA
PETER C. STRIFFLER
No. 10465
5/3/92
PROF. ENGINEER

DEPARTMENT OF THE NAVY — NAVAL FACILITIES ENGINEERING COMMAND
NAVY PUBLIC WORKS CENTER
NAVAL STATION — NORFOLK, VIRGINIA

NORFOLK NAVAL STATION VIRGINIA

INTERIOR AND EXTERIOR REPAIRS TO J-50

SECOND FLOOR PLAN - WING E - MECHANICAL

SIZE	CODE IDENT NO.	NAVFAC DRAWING NO.	PWC DRAWING NO.
D	80091	4,253,920	14335CG

CONSTR. CONTR. NO. N62470-91-B-0243

SCALE: GRAPHIC SPEC. 05-91-0243 SHEET 86 OF 126

REVISIONS				
SYM	DESCRIPTION	DATE	SATISFACTORY	APPROVED BY

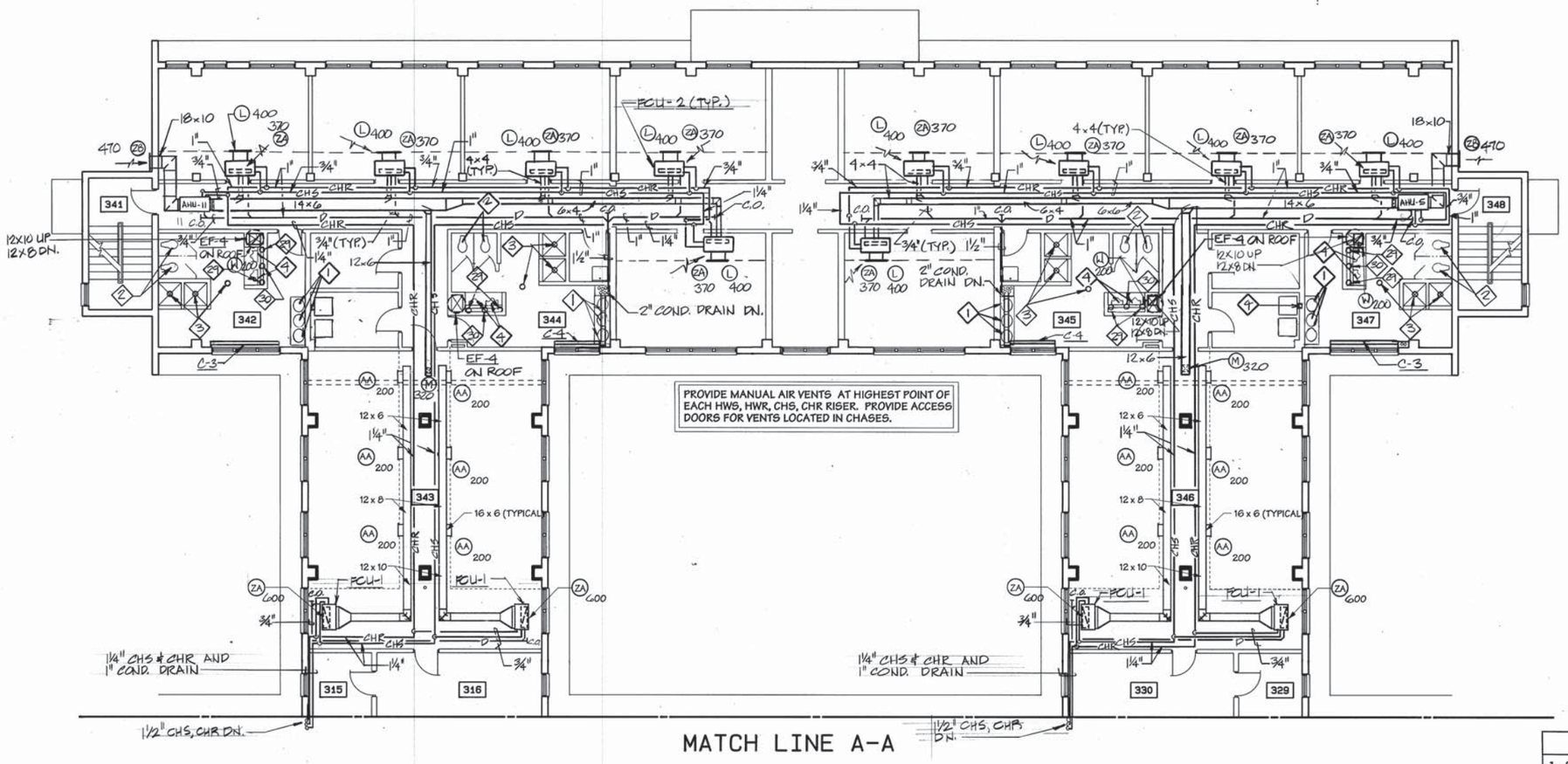

THIRD FLOOR PLAN - WING E MECHANICAL

SCALE : 1/8" = 1'- 0"

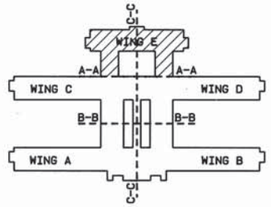

KEY PLAN

NOT TO SCALE

GRAPHIC SCALES:

SCALE: 1/8"

0 2 4 8 16 24

NOTES THIS SHEET

1. SEE SHEET M-1 FOR "DEMOLITION WORK NOTES."
2. SEE SHEET M-1 FOR "NEW WORK NOTES."

M-32

HANBURY EVANS NEWILL VLATTAS
120 ATLANTIC STREET
NORFOLK, VIRGINIA 23510

MARABLE STRIFFLER & ASSOCIATES, P.C.
440 VIKING DR. SUITE 100
VA. BEACH VA. 23452
(804) 340-4441

COMMONWEALTH OF VIRGINIA
PETER E. STRIFFLER
No. 10465
PROFESSIONAL ENGINEER

JOB ORDER NO. 1250554
DES. PCS DR. JES CHK. GJM
BR. MGR.
SUBMITTED BY: DATE: 8/3/92
FIRM MEMBER / PRINCIPAL
EIC D. RIGGS F.P.
DIV.DIR. R. IVES
APPROVED: DATE: 8/14/92
SATISFACTORY TO ACTIVITY
APPROVED: DATE: 9/24/92
FOR C.O. FOR COMMANDER, NAVFAC

DEPARTMENT OF THE NAVY — NAVAL FACILITIES ENGINEERING COMMAND
NAVY PUBLIC WORKS CENTER
NAVAL STATION — NORFOLK, VIRGINIA

NAVAL STATION
NORFOLK VIRGINIA

INTERIOR AND EXTERIOR REPAIRS TO J-50

THIRD FLOOR PLAN - WING E - MECHANICAL

SIZE	CODE IDENT NO.	NAVFAC DRAWING NO.	PWC DRAWING NO.
D	80091	4,253,925	14335CL

CONSTR. CONTR. NO. N62470-91-B-0243

SCALE: GRAPHIC — SPEC. 05-91-0243 — SHEET 91 OF 126

AIR DISTRIBUTION SCHEDULE

MARK	NECK SIZE	S.P.	THROW	REMARKS
A	10" X 8"	.02"	13'	SW,DD,AB,OBD
B	14" X 8"	.03"	13'	SW,DD,AB,OBD
C	10" X 4"	.03"	7'	SW,DD,AB,OBD
D	10" X 4"	.02"	9'	SW,DD,AB,OBD
E	22" X 10"	.02"	10'	SW,DD,AB,OBD
F	12" X 8"	.02"	10'	SW,DD,AB,OBD
G	16" X 10"	.02"	10'	SW,DD,AB,OBD
H	12" X 12"	.05"	8'	4 WAY, CD,OBD
I	9" X 9"	.09"	8'	4 WAY, CD,OBD
J	6" X 6"	.16"	8'	4 WAY, CD,OBD
K	9" X 9"	.04"	8'	4 WAY, CD,OBD
L	26" X 6"	.04"	10'	SW,DD,AB,OBD
M	18" X 18"	.04"	3'	4 WAY, CD,OBD
AA	16" X 16"	.04"	10'	SW,DD,AB,OBD
AB	12" X 12"	.01"	6'	4 WAY, CD,OBD
AC	6" X 6"	.01"	4'	3 WAY, CD, OBD
N	8" X 6"	.03"	---	RG,OBD
P	10" X 6"	.03"	---	RG,OBD
Q	12" X 12"	.08"	---	RG,OBD
R	10" X 6"	.012"	---	TG,OBD
S	36" X 12"	.035"	---	FRESH AIR INTAKE LOUVER
T	12" X 8"	.06"	---	EG
U	18" X 12"	.08"	---	EG
V	8" X 4"	.08"	---	TG,OBD
W	10" X 8"	.08"	---	TG,OBD
X	8" X 4"	.02"	---	TG,OBD
Y	48" X 24"	.09"	---	RR,OBD
Z	70" X 18"	.06"	---	O.A LOUVER
ZA	42" X 10"	.06"	---	RR,FG
ZB	24" X 12"	.06"	---	O.A. LOUVER
ZC	12" X 12"	.08"	---	RG,OBD
ZD	36" X 30"	.08"	---	EXHAUST LOUVER
ZE	22" X 10"	.08"	---	RG,OBD
ZF	12" X 12"	.03"	---	RR,OBD
ZG	8" X 6"	.08"	---	RG,OBD
ZH	24" X 24"	.02"	---	RR,OBD
ZI	70" X 18"	.1"	---	EXHAUST LOUVER
ZJ	24" X 24"	.08"	---	EG/OBD

ABBREVIATIONS:

RG	RETURN GRILLE	FG	FILTER GRILLE
SW	SIDE WALL	DD	DOUBLE DEFLECTION
TG	TRANSFER GRILLE	AB	ADJUSTABLE BAR
RR	RETURN REGISTER	CD	CEILING DIFFUSER
EG	EXHAUST GRILLE	OBD	OPPOSED BLADE DAMPER

FAN COIL UNIT SCHEDULE

MARK	S.A.	OA CFM	COOLING CAPACITIES							HEATING CAPACITIES				ELECTRICAL			REMARKS
			TOTAL MBH	SENS. MBH	ENT.AIR FDB	ENT.AIR FWB	E.W.T. (F)	GPM	P.D.	TOTAL MBH	E.A.T. (F)	E.W.T. (F)	GPM	FLA	VOLTS	PHASE	
FCU-1	600	160	14.8	13.8	78°	65°	45°	3.4	13.7	15.2	70°	180°	3.4	0.8	120	1	
FCU-2	400	30	9.9	9.5	78°	65°	45°	4.1	11.2	10.4	70°	180°	4.1	1.3	120	1	
FCU-3	200	30	5.8	4.3	78°	65°	45°	2.3	3.2	---	---	---	---	0.5	120	1	
FCU-4	400	30	12.8	9.4	78°	65°	45°	7.7	13.7	---	---	---	---	0.8	120	1	

SELECTIONS BASED ON WATER TEMPERATURE RISE OF 10° F. SELECTION BASED ON HIGH FAN SPEED

CHILLER SCHEDULE

MARK	CH-1	CH-2	CH-3	CH-4	CH-5(EXISTING)
TYPE	RECIP. CHILLER	RECIP. CHILLER	RECIP. CHILLER	RECIP. CHILLER	RECIP. CHILLER
COOLING CAPACITY(MBH)	55.8	81.3	55.8	66.7	47
ENTERING WATER TEMPERATURE (°F)	55	55	55	55	55
LEAVING WATER TEMPERATURE	45	45	45	45	45
WATER FLOW (GPM)	204.2	195	134	160	125
MAX. WATER P.D. (FT.)	134	10	6.9	5.5	12
STD AMBIENT TEMPERATURE	6.9	95¡F	95¡F	95¡F	95
NUMBER OF COMPRESSORS	2	2	2	2	---
CAPACITY REDUCTION %	100-75-50-25	100-75-50-25	100-75-50-25	100-75-50-25	100-75-50-25
NUMBER OF STEPS	4	4	4	4	4
MINIMUM UNLOADING	25%	25%	25%	25%	25%
MINIMUM CIRCUIT AMPACITY	172	141	141	141	---
VOLTS/PHASE/HZ	460/3/60	460/3/60	460/3/60	460/3/60	208/3/60

NOTE:
PROVIDE SINGLE POINT ELECTRICAL CONNECTION.

CONVECTOR SCHEDULE

MARK	TOT BTUH	GPM	CABINET HEIGHT	ELEMENT LENGTH	EWT	EAT	REMARKS
C-1	9300	1	32"	5'-0"	180	65	
C-2	7200	1	32"	3'-8"	180	65	
C-3	10300	1	32"	5'-4"	180	65	
C-4	4200	1	32"	2'-8"	180	65	

STEAM TO HOT WATER CONVERTOR SCHEDULE

MARK	TYPE	PERFORMANCE - SHELL			PERFORMANCE-TUBE			SERVICE
		BTU/HR	INCOMING PRESSURE (PSIG)	PRESSURE DROP (PSIG)	GPM	ENTERING/LEAVING (F)	PRESSURE DROP (FT)	
HX-1	STEAM-TO-H.W.	6,363,000	5	1.8	655	160/180	1.00	HOT WATER HEATING

DOMESTIC HOT WATER HEATER SCHEDULE

MARK	TYPE	GPH	INCOMING PRESSURE (PSIG)	PRESSURE DROP (PSIG)	LB/HR	C.W.	H.W.	SERVICE
SWH-1	STEAM-TO-H.W.	2,224	5	0.88	1500	1 1/2"	1 1/2"	DOMESTIC HOT WATER HEATING (50°F TO 120°F)
SWH-2	STEAM-TO-H.W.	2,224	5	0.88	1500	1 1/2"	1 1/2"	DOMESTIC HOT WATER HEATING (50°F TO 120°F)

REVISIONS				
SYM	DESCRIPTION	DATE	SATISFACTORY	APPROVED BY

PUMP SCHEDULE

MARK	GPM	FT.HD.	HP	RPM	VOLTS	PHASE	TYPE	SERVICE
CP-1	134	80	5	1750	480	3	BASE MOUNTED CENTRIFUGAL	DUAL TEMPERATURE END SUCT.
CP-2	195	115	10	1750	480	3	BASE MOUNTED CENTRIFUGAL	DUAL TEMPERATURE END SUCT.
CP-3	134	70	5	1750	480	3	BASE MOUNTED CENTRIFUGAL	DUAL TEMPERATURE END SUCT.
CP-4	160	120	10	1750	480	3	BASE MOUNTED CENTRIFUGAL	DUAL TEMPERATURE END SUCT.
CP-5	655	65	15	1750	480	3	BASE MOUNTED CENTRIFUGAL	PRIMARY HOT WATER PUMP
CP-6	655	65	15	1750	480	3	BASE MOUNTED CENTRIFUGAL	PRIMARY HOT WATER PUMP
CP-7	37	50	1/12	3500	208	1	IN LINE	DOMESTIC HW RECIRC PUMP
CP-8	37	50	1/12	3500	208	1	IN LINE	DOMESTIC HW RECIRC PUMP
CP-9	37	3.4	1/2	3500	208	3	CONDENSATE RECIEVER & PUMP	SEE NOTE 1 BELOW
CP-10	125	67	7 1/2	1750	208	3	BASE MOUNTED CENTRIFUGAL	SEE NOTE 2.
SP-1	70	25	1	3500	208	3	SUBMERSIBLE SUMP PUMP	

NOTES:
1. 37,992 SF EDR, 36 GAL RECEIVER
2. EXISTING CIRCULATION PUMP FOR EXISTING CH-5

STEAM TRAP SCHEDULE

MARK	PIPE SIZE INCHES	PRESSURE RANGE PSIG	RATED CAPACITY LB/HR @ 1 PSI PRESSURE DIFFERENTIAL	TYPE	REMARKS
T #1	2"	15	10,000	FLOAT & THERMOSTATIC	STEAM TO H.W. COMVERTOR
T #2	2"	125	13,500	FLOAT & THERMOSTATIC	HPS PRY STATION
T #3	1"	15	3,000	FLOAT & THERMOSTATIC	SWH-1
T #4	1"	15	3,000	FLOAT & THERMOSTATIC	SWH-2
T #5	3/4"	15	200	FLOAT & THERMOSTATIC	FLASH TANK

M-38

MARABLE STRIFFLER & ASSOCIATES, P.C.
440 VIKING DR. SUITE 100
VA. BEACH VA. 23452
(804) 340-4441

COMMONWEALTH OF VIRGINIA
PETER C. STRIFFLER
No. 10465
PROFESSIONAL ENGINEER
#92005

HANBURY EVANS NEWILL VLATTAS
120 ATLANTIC STREET
NORFOLK, VIRGINIA 23510

JOB ORDER NO. 1250554
DES. PCS DR. JES CHK. GJM
BR. MGR.
SUBMITTED BY: DATE: 8/3/92
FIRM MEMBER / PRINCIPAL
BC D. RIGGS F.P. 98R
DIV. DIR. R. IVES
APPROVED: DATE: 07/14/92
SATISFACTORY TO ACTIVITY
APPROVED: DATE: 9/24/92
FOR C.O. FOR COMMANDER, NAVFAC

DEPARTMENT OF THE NAVY — NAVAL FACILITIES ENGINEERING COMMAND
NAVY PUBLIC WORKS CENTER
NAVAL STATION — NORFOLK, VIRGINIA

NAVAL STATION
NORFOLK VIRGINIA

INTERIOR AND EXTERIOR REPAIRS TO J-50

EQUIPMENT SCHEDULES

SIZE	CODE IDENT NO.	NAVFAC DRAWING NO.	PWC DRAWING NO.
D	80091	4,253,931	14335CR

CONSTR. CONTR. NO. N62470-91-B-0243
SCALE: GRAPHIC — SPEC. 05-91-0243 — SHEET 97 OF 126

REVISIONS				
SYM	DESCRIPTION	DATE	SATISFACTORY	APPROVED BY

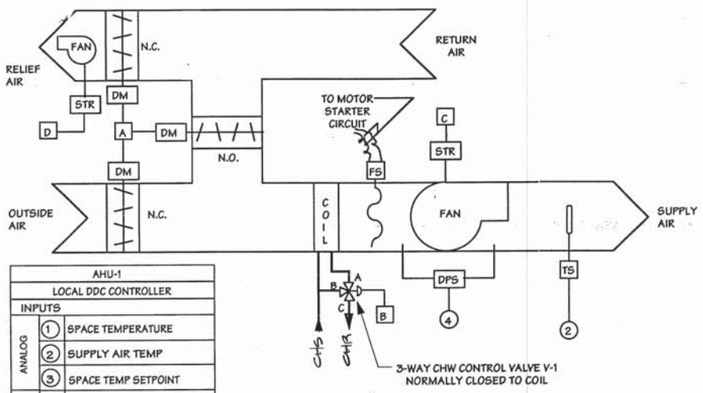

AHU-1		
LOCAL DDC CONTROLLER		
INPUTS		
ANALOG	1	SPACE TEMPERATURE
	2	SUPPLY AIR TEMP
	3	SPACE TEMP SETPOINT
DIGITAL	4	SUPPLY FAN STATUS
OUTPUTS		
ANALOG	A	DAMPERS
	B	3-WAY VALVE
DIGITAL	C	SUPPLY FAN STARTER
	D	RELIEF FAN STARTER

WALL MOUNTED ROOM TEMPERATURE SENSOR WITH CONCEALED SETPOINT ADJUSTMENT

TS

1 3

AIR HANDLING WITH ECONOMIZER

NO SCALE

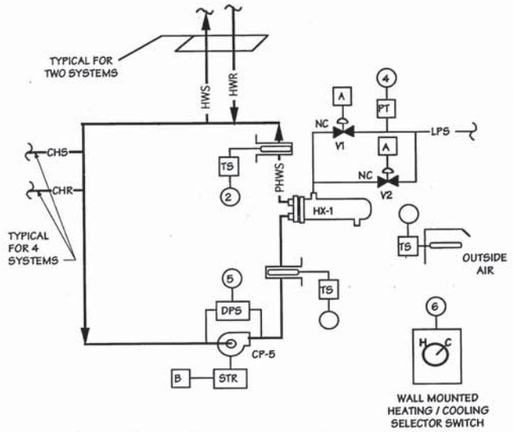

PRIMARY HOT WATER LOOP		
LOCAL DDC CONTROLLER		
OUTPUT		
ANALOG	A	STEAM VALVES V1/V2
DIGITAL	B	PUMP START
INPUT		
ANALOG	1	OA TEMP
	2	PHWS TEMP
	3	PHWR TEMP
	4	LPS PRESSURE
DIGITAL	5	PUMP STATUS
	6	CHANGEOVER SELECTOR

PRIMARY HOT WATER LOOP CONTROL

NO SCALE

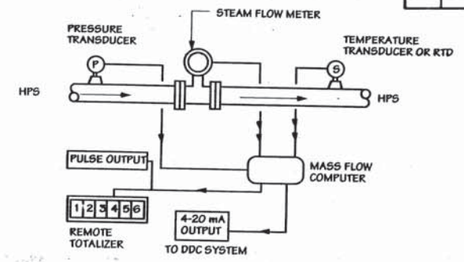

STEAM METER DIAGRAM

NO SCALE

CONTROL LEGEND

STR	MOTOR STARTER
DPS	DIFFERENTIAL PRESSURE SWITCH
DPT	DIFFERENTIAL PRESSURE TRANSMITTER
VFD	VARIABLE FREQUENCY DRIVE
DM	DAMPER MOTOR
SPT	STATIC PRESSURE TRANSMITTER
T	THERMOSTAT
TS	TEMPERATURE SENSOR
PT	PRESSURE TRANSMITTER
FS	FREEZESTAT
SD	SMOKE DETECTOR
M	MOTOR
R	RELAY
N.C	NORMALLY CLOSED
N.O	NORMALLY OPEN
LP	LOW PRESSURE STEAM
PCWS	PRIMARY CHILLED WATER SUPPLY
PCWR	PRIMARY CHILLED WATER RETURN
CHWS	CHILLED/HOT WATER SUPPLY
CHWR	CHILLED/HOT WATER RETURN
PHWS	PRIMARY HOT WATER SUPPLY
PHWR	PRIMARY HOT WATER RETURN
CHW	CHILLED/HOT WATER
HWS	HOT WATER SUPPLY
HWR	HOT WATER RETURN
CWS	CHILLED WATER SUPPLY
CWR	CHILLED WATER RETURN
DCW	DOMESTIC COLD WATER
DHW	DOMESTIC HOT WATER
OL	OVERLOAD
HOA	HAND/OFF/AUTOMATIC
PRV	PRESSURE REDUCING VALVE
2 POS	TWO POSITION
MOD	MODULATING
CLG	COOLING
HTG	HEATING
DO	DIGITAL OUTPUT
DI	DIGITAL INPUT
AO	ANALOG OUTPUT
AI	ANALOG INPUT

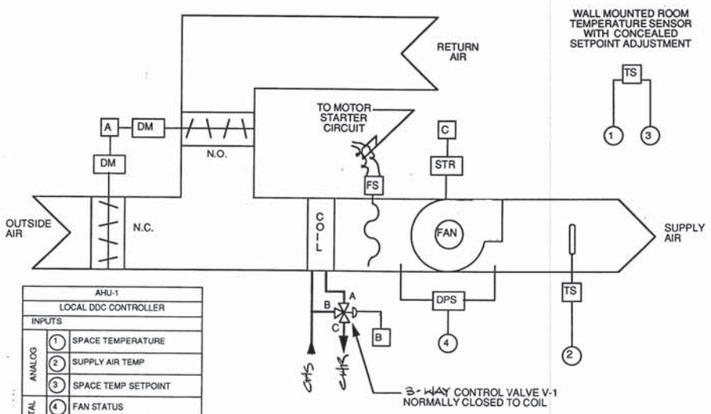

WALL MOUNTED ROOM TEMPERATURE SENSOR WITH CONCEALED SETPOINT ADJUSTMENT

TS

1 3

AHU-1		
LOCAL DDC CONTROLLER		
INPUTS		
ANALOG	1	SPACE TEMPERATURE
	2	SUPPLY AIR TEMP
	3	SPACE TEMP SETPOINT
DIGITAL	4	FAN STATUS
OUTPUTS		
ANALOG	A	DAMPERS
	B	3-WAY VALVE
DIGITAL	C	FAN STARTER

AIR HANDLING UNIT (AHU-1) CONTROL

NO SCALE

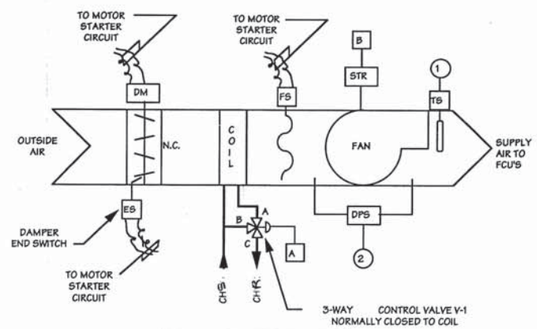

AHU-36 THRU AHU-42		
LOCAL DDC CONTROLLER		
INPUTS		
ANALOG	1	SUPPLY AIR TEMP
DIGITAL	2	FAN STATUS
OUTPUTS		
ANALOG	A	3-WAY CHW VALVE
DIGITAL	B	FAN STARTER

O.A. AIR HANDLING UNIT (AHU-36) AHU-37 THRU AHU-42 SIMILAR

NO SCALE

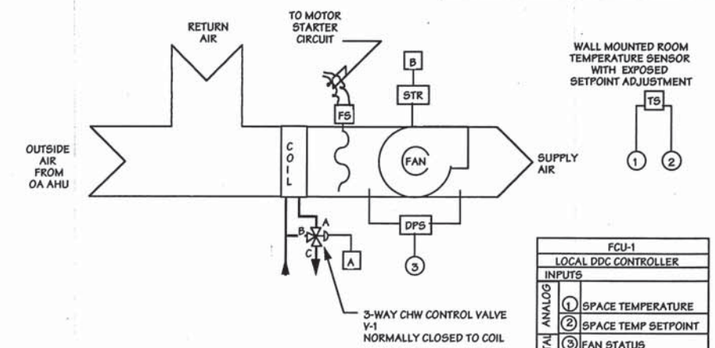

FCU-1		
LOCAL DDC CONTROLLER		
INPUTS		
ANALOG	1	SPACE TEMPERATURE
	2	SPACE TEMP SETPOINT
DIGITAL	3	FAN STATUS
OUTPUTS		
ANALOG	A	3-WAY CHW VALVE
DIGITAL	B	FAN STARTER

FAN COIL UNIT (FCU-1 & 2) CONTROL FCU-3 & 4 SIMILAR

NO SCALE

M-40

HANSBURY EVANS NEWILL VLATTAS
120 ATLANTIC STREET
NORFOLK, VIRGINIA 23510

MARABLE STRIFFLER & ASSOCIATES, P.C.
440 VIKING DR. SUITE 100
VA. BEACH VA. 23452
(804) 340-4441

COMMONWEALTH OF VIRGINIA
PETER C. STRIFFLER
No. 10465
PROFESSIONAL ENGINEER
#92005

JOB ORDER NO. 1250554
DES. PCS | DR. JES | CHK. GJM
BR. MGR.
SUBMITTED BY: DATE: 8/3/92
FIRM MEMBER / PRINCIPAL
BIC D. RIGGS | F.P. GOR
DIV. DIR. R. IVES
APPROVED: DATE: 8/14/92
SATISFACTORY TO ACTIVITY
APPROVED: DATE: 9/24/92
FOR CO, FOR COMMANDER, NAVFAC

DEPARTMENT OF THE NAVY — NAVAL FACILITIES ENGINEERING COMMAND
NAVY PUBLIC WORKS CENTER
NAVAL STATION — NORFOLK, VIRGINIA

NORFOLK — NAVAL STATION — VIRGINIA

INTERIOR AND EXTERIOR REPAIRS TO J-50

CONTROL DIAGRAMS

SIZE	CODE IDENT NO.	NAVFAC DRAWING NO.	PWC DRAWING NO.
D	80091	4,253,933	14335CT

CONSTR. CONTR. NO. N62470-91-B-0243

SCALE: GRAPHIC | SPEC. 05-91-0243 | SHEET 99 OF 126

SEQUENCE OF OPERATION

SYSTEM CHANGE - OVER CONTROL

SYSTEM CHANGE-OVER FROM HEATING TO COOLING SHALL BE ACCOMPLISHED BY A WALL MOUNTED MANUAL SELECTOR SWITCH.

WITH THE SELECTOR SWITCH IN THE HEATING POSITION, THE DIRECT DIGITAL CONTROLLERS (DDC) FOR ALL AIR HANDLING UNITS (AHU), O.A. AIR HANDLING UNITS (OAAHU), FAN COIL UNITS (FCU), PUMPS AND VALVES SHALL BE INDEXED FOR HEATING. CHANGEOVER VALVE V-4 SHALL BE DE-ENERGIZED CAUSING THE CHR FLOW TO BYPASS THE CHILLER. CHILLER #1 SHALL BE DISABLED. THE DDC SHALL MODULATE VALVE V-3 TO MAINTAIN THE CHS HOT WATER TEMPERATURE SETPOINT.

WITH THE SELECTOR SWITCH IS IN THE COOLING POSITION, THE DDC CONTROLS FOR ALL AIR HANDLING UNITS (AHU), O.A. AIR HANDLING UNITS (OAAHU), FAN COIL UNITS (FCU), PUMPS AND VALVES SHALL BE INDEXED FOR COOLING. VALVE V-3 SHALL BE ENERGIZED CAUSING CHR FLOW TO BYPASS THE PRIMARY HOT WATER LOOP. CHANGEOVER VALVE V-4 AND CHILLER #1 SHALL BE CONTROLLED BY THE DDC AS DESCRIBED UNDER CHILLER CONTROL.

CHILLER #1 CONTROL (TYPICAL FOR 5 CHILLERS)

THE CHILLER SHALL BE OPERABLE ONLY IN THE COOLING MODE AS DETERMINED BY THE CHANGEOVER SELECTOR SWITCH. CHILLER #1 SHALL BE FURNISHED WITH SELF-CONTAINED CONTROLS WHICH SHALL START THE UNIT ON A DEMAND FOR COOLING. INTEGRAL CAPACITY CONTROLS SHALL MAINTAIN THE INDICATED CHILLED WATER TEMPERATURE SETPOINT. A FLOW SWITCH SHALL PREVENT THE CHILLER FROM STARTING UNLESS THERE IS ADEQUATE FLOW THROUGH THE CHILLER. VALVE V-4 SHALL BE CLOSED TO THE CHILLER AND OPEN TO THE CHILLER BYPASS PIPING AT ANY TIME THAT THE CHR TEMPERATURE EXCEEDS 95 DEGREES F. AT CHR TEMPERATURES BELOW 95 DEGREES F VALVE V-4 SHALL BE OPEN TO THE CHILLER ALLOWING FULL CHR FLOW THROUGH THEW CHILLER. THE CHILLER SHALL BE DISABLED BY THE DDC AT ANY TIME THAT CHW PUMP CP-1 IS DISABLED,VALVE V-4 IS CLOSED TO THE CHILLER, OR OUTSIDE AIR TEMPERATURE IS BELOW 60 DEGREES F. OBSERVE THE CHILLER MANUFACTURER S MINIMUM ON AND OFF TIMES.

CHILLED/HOT WATER SUPPLY PUMP (TYPICAL FOR 4 CHW PUMPS)

PUMP SHALL BE CONTROLLED BY A "HAND-OFF-AUTO" (HOA) SWITCH. IN THE AUTO POSITION PUMP SHALL RUN CONTINUOUSLY.

PRIMARY HOT WATER LOOP PUMP (CP-2)(TYPICAL FOR CP-5)

PUMP CP-1 SHALL BE CONTROLLED BY A "HAND-OFF-AUTO" (HOA) SWITCH. WHEN THE SELECTOR SWITCH IS IN THE HEATING POSITION AND THE HOA SWITCH IS IN THE "AUTO" POSITION, CP-1 SHALL BE ENERGIZED BY THE DDC AND OPERATE CONTINUOUSLY. IN THE "HAND" POSITION, CP-1 SHALL RUN CONTINUOUSLY. WHEN THE SELECTOR SWITCH IS IN THE "COOLING" POSITION CP-4 SHALL BE DISABLED.

HOT WATER CONVERTER (HX-1) CONTROL

WHEN THE SELECTOR SWITCH IS IN THE "HEATING" POSITION, THE DDC SHALL MODULATE NORMALLY CLOSED CONVERTOR CONTROL VALVES V-1 AND V-2 TO MAINTAIN THE PRIMARY HOT WATER SUPPLY TEMPERATURE SETPOINT OF 180 DEGREES F. VALVES V-1 AND V-2 SHALL BE SIZED TO ACCOMMODATE 1/3 AND 2/3 OF MAXIMUM FLOW RESPECTIVELY. VALVES V-1 AND V-2 SHALL BE CLOSED WHEN THE OUTSIDE TEMPERATURE IS ABOVE 60 F. ON A FALL IN PHWS TEMPERATURE, V-1 SHALL MODULATE OPEN TO HX-1 TO MAINTAIN ITS SET POINT. ON A CONTINUED FALL IN PHWS TEMPERATURE VALVE V-2 SHALL MODULATE IN SEQUENCE WITH V-1 TO MAINTAIN THE PHWS SETPOINT. ON A RISE IN PHWS TEMPERATURE, THE REVERSE SHALL OCCUR. WHEN THE SELECTOR SWITCH IS IN THE "COOLING " POSITION V-1 AND V-2 SHALL REMAIN CLOSED. AT ANY TIME THAT PRIMARY HOT WATER LOOP PUMP CP-4 OR CP-5 IS DISABLED VALVES V-1 AND V-2 SHALL BE CLOSED.

AIR HANDLING UNIT (WITH ECONOMIZER)

EACH AHU SUPPLY FAN SHALL BE ENERGIZED BY A HOA SWITCH LOCATED IN ITS EQUIPMENT ROOM. WITH THE HOA SWITCH IN THE "ON" POSITION, THE AHU SUPPLY FAN SHALL RUN CONTINUOUSLY. WITH THE HOA IN THE "AUTO" POSITION A DDC SHALL CONTROL THE AHU SUPPLY FAN TO RUN CONTINUOUSLY. THE DDC SHALL MODULATE CHW COIL CONTROL VALVE V-1 TO MAINTAIN THE SPACE TEMPERATURE SET POINT.

WITH THE CHANGEOVER SELECTOR IN THE COOLING POSITION, ON A RISE IN SPACE TEMPERATURE ABOVE THE SPACE TEMPERATURE SETPOINT THE OUTSIDE AND RELIEF AIR DAMPERS SHALL MODULATE OPEN AND THE RETURN DAMPER SHALL CLOSE PROPORTIONALLY. ON A CONTINUED RISE IN SPACE TEMPERATURE, THE DDC SHALL MODULATE THE CHW COIL CONTROL VALVE IN SEQUENCE TO MAINTAIN THE SPACE COOLING TEMPERATURE SETPOINT. ON A FALL IN SPACE TEMPERATURE THE REVERSE SHALL OCCUR WITH THE OUTSIDE AIR DAMPER CLOSING TO AN ADJUSTABLE MINIMUM POSITION. ON A RISE IN OUTSIDE AIR TEMPERATURE ABOVE 68 DEGREES F THE OUTSIDE AND RELIEF AIR DAMPERS SHALL CLOSE TO THEIR ADJUSTABLE MINIMUM POSITIONS AND THE RETURN AIR DAMPER SHALL OPEN PROPORTIONALLY. AT ANY TIME THAT THE RELIEF AIR DAMPER IS MORE THAN 25% OPEN TO FULL RELIEF THE RELIEF FAN SHALL BE ENERGIZED. AT ANY TIME THAT THE RELIEF AIR DAMPER IS LESS THAN 25% OPEN TO FULL RELIEF THE EXHAUST FAN SHALL BE DEENERGIZED.

SPACE TEMPERATURE SETPOINTS SHALL BE ADJUSTABLE FROM THE CONCEALED SENSOR SETPOINT THUMBWHEEL ONLY WHEN AUTHORIZED BY OPERATOR COMMAND. OPERATOR COMMAND MAY ALSO RESTRICT MAXIMUM AND MINIMUM SETPOINTS OR DETERMINE THE EXACT HEATING AND COOLING SETPOINTS. INITIAL SPACE TEMPERATURE SETPOINTS SHALL BE HEATING 70 DEGREES F AND COOLING 76 DEGREES F.

WHEN IN THE "HEATING" OCCUPIED MODE AS DETERMINED BY THE SELECTOR SWITCH AND ON A FALL IN SPACE TEMPERATURE THE COIL CONTROL VALVE SHALL MODULATE TO MAINTAIN THE SPACE HEATING TEMPERATURE SETPOINT. THE OUTSIDE AND RELIEF AIR DAMPERS SHALL CLOSE TO THEIR ADJUSTABLE MINIMUM POSITIONS AND THE RETURN AIR DAMPER SHALL OPEN PROPORTIONALLY. ON A RISE IN SPACE TEMPERATURE ABOVE THE SPACE HEATING TEMPERATURE SETPOINT THE COIL CONTROL VALVE SHALL CLOSE TO THE COIL AND THE OUTSIDE AND RELIEF AIR DAMPERS SHALL MODULATE OPEN AND THE RETURN DAMPER SHALL CLOSE PROPORTIONALLY TO MAINTAIN THE SPACE HEATING TEMPERATURE SETPOINT.

A FREEZESTAT SHALL BE LOCATED IN THE CHW COIL DISCHARGE . WHEN THE SUPPLY AIR TEMPERATURE FALLS BELOW 38 F. THE AHU FAN SHALL BE DISABLED AND THE OUTSIDE AND RELIEF AIR DAMPERS SHALL CLOSE.

AIR HANDLING UNIT (WITHOUT ECONOMIZER)

EACH AHU SHALL BE ENERGIZED BY A HOA SWITCH LOCATED IN ITS EQUIPMENT ROOM. WITH THE HOA SWITCH IN THE "ON" POSITION, THE AHU FAN SHALL RUN CONTINUOUSLY. WITH THE HOA IN THE "AUTO" POSITION A DDC SHALL CONTROL THE AHU FAN TO RUN CONTINUOUSLY. THE DDC SHALL MODULATE CHW COIL CONTROL VALVE V-1 TO MAINTAIN THE SPACE TEMPERATURE SET POINT ("COOLING" OR "HEATING").

THE OUTSIDE AIR AND RETURN AIR DAMPER SHALL BE MODULATED IN SEQUENCE WITH THE CHW COIL VALVE TO MAINTAIN THE SPACE TEMPERATURE SETPOINT. ON A RISE IN SPACE TEMPERATURE THE OUTSIDE AIR DAMPER SHALL MODULATE OPEN TO MAINTAIN THE SPACE TEMPERATURE SETPOINT AND THE RETURN DAMPER SHALL CLOSE PROPORTIONALLY. ON A CONTINUED RISE IN TEMPERATURE AND AFTER THE OUTSIDE AIR DAMPER IS FULLY OPEN THE DDC SHALL MODULATE THE CHW COIL CONTROL VALVE TO MAINTAIN THE SPACE TEMPERATURE SETPOINT. ON A FALL IN SPACE TEMPERATURE THE REVERSE SHALL OCCUR. ON A RISE IN OUTSIDE AIR TEMPERATURE ABOVE 68 DEGREES THE OUTSIDE AIR DAMPER SHALL CLOSE TO ITS ADJUSTABLE MINIMUM POSITION AND THE RETURN AIR DAMPER SHALL OPEN PROPORTIONALLY.

SPACE TEMPERATURE SETPOINTS SHALL BE ADJUSTABLE FROM THE CONCEALED SENSOR SETPOINT THUMBWHEEL ONLY WHEN AUTHORIZED BY OPERATOR COMMAND. OPERATOR COMMAND MAY ALSO RESTRICT MAXIMUM AND MINIMUM SETPOINTS OR DETERMINE THE EXACT HEATING AND COOLING SETPOINTS.

WHEN IN THE "HEATING" MODE, AS DETERMINED BY THE SELECTOR SWITCH, AND THE ON A FALL IN SPACE TEMPERATURE, THE COIL CONTROL VALVE SHALL MODULATE OPEN TO MAINTAIN THE SPACE TEMPERATURE SETPOINT. ON A RISE IN SPACE TEMPERATURE THE REVERSE SHALL OCCUR . WHEN IN THE "COOLING" MODE, ON RISE IN SPACE TEMPERATURE, THE COIL CONTROL VALVE SHALL MODULATE OPEN TO MAINTAIN THE SPACE TEMPERATURE SETPOINT. ON A FALL IN SPACE TEMPERATURE, THE REVERSE SHALL OCCUR.

A FREEZESTAT SHALL BE LOCATED IN THE CHW COIL DISCHARGE . WHEN THE SUPPLY AIR TEMPERATURE FALLS BELOW 38 F. THE AHU FAN SHALL BE DISABLED AND THE OA DAMPER SHALL CLOSE.

OA AIR HANDLING UNIT CONTROL

THE AHU SHALL BE ENERGIZED BY A HOA SWITCH. WITH THE HOA SWITCH IN THE "ON" POSITION, THE AHU FAN SHALL RUN CONTINUOUSLY. WITH THE HOA IN THE "AUTO" POSITION A DDC SHALL CONTROL THE AHU FAN TO RUN CONTINUOUSLY AND POSITION THE OUTSIDE AIR DAMPER (OAD) FULLY OPEN. THE SUPPLY FAN SHALL NOT START UNTIL THE DAMPER END SWITCH VERIFIES THAT THE DAMPER IS FULLY OPEN. THE DDC SHALL CONTROL THE CHW COIL CONTROL VALVE TO MAINTAIN THE SUPPLY AIR TEMPERATURE AT 56 DEGREES.

WHEN IN THE "HEATING" MODE, AS DETERMINED BY THE SELECTOR SWITCH, AND ON A FALL IN THE SUPLY AIR TEMPERATURE, THE COIL CONTROL VALVE SHALL MODULATE OPEN TO MAINTAIN A SUPPLY AIR TEMPERATURE SET POINT OF 56 DEGREES F. ON A RISE IN SUPLPY AIR TEMPERATURE THE REVERSE SHALL OCCUR.

WHEN IN THE "COOLING" MODE, ON RISE IN SUPPLY AIR TEMPERATURE, THE COIL CONTROL VALVE SHALL MODULATE OPEN TO THE COIL TO MAINTAIN A SET POINT OF 56 DEGREES. ON A FALL IN SUPPLY AIR TEMPERATURE, THE REVERSE SHALL OCCUR.

A FREEZESTAT SHALL BE LOCATED IN THE CHW COIL DISCHARGE. WHEN THE SUPPLY AIR TEMPERATURE FALLS BELOW ITS SET POINT OF 38 F., THE AHU FAN SHALL BE DISABLED AND THE OA DAMPER SHALL CLOSE.

FAN COIL UNIT(FCU) CONTROL

EACH FCU SHALL BE CONTROLLED BY A UNIT MOUNTED DDC. WHEN THE FCU IS ENABLED BY ITS ASSOCIATED WALL MOUNTED "OFF-LOW-MED.-HIGH" (OLMH) SWITCH BY SELECTING "LOW", "MED.", OR "HIGH", THE FCU FAN SHALL RUN CONTINUOUSLY AT THE SELECTED SPEED. WHEN IN THE "HEATING" MODE AS DETERMINED BY THE SELECTOR SWITCH, ON A FALL IN SPACE TEMPERATURE THE COIL VALVE SHALL MODULATE OPEN TO MAINTAIN THE SPACE TEMPERATURE SETPOINT. ON A RISE IN SPACE TEMPERATURE THE REVERSE SHALL OCCUR. IN THE "COOLING" MODE, ON A RISE IN SPACE TEMPERATURE THE COIL VALVE SHALL MODULATE OPEN TO MAINTAIN THE SPACE TEMPERATURE SETPOINT. ON A FALL IN SPACE TEMPERATURE THE REVERSE SHALL OCCUR.

SPACE TEMPERATURE SETPOINTS SHALL BE ADJUSTABLE FROM THE EXPOSED SENSOR SETPOINT THUMBWHEEL ONLY WHEN AUTHORIZED BY OPERATOR COMMAND. OPERATOR COMMAND MAY ALSO RESTRICT MAXIMUM AND MINIMUM SETPOINTS OR DETERMINE THE EXACT HEATING AND COOLING SETPOINTS. INITIAL SPACE TEMPERATURE SETPOINTS SHALL BE HEATING 70°F AND COOLING 76°F.

FINNED TUBE RADIATION CONTROL

THE FINNED TUBE RADIATION UNITS SHALL BE CONTROLLED BY A SELF CONTAINED THERMOSTATIC CONTROL VALVE. ON A FALL IN SPACE TEMPERATURE, THE VALVE SHALL MODULATE OPEN TO THE FINNED TUBE. ON A RISE IN SPACE TEMPERATURE, THE REVERSE SHALL OCCUR.

EXHAUST FAN (EF) CONTROL

SPACE EXHAUST FANS SHALL OPERATE CONTINUOUSLY.

REVISIONS				
SYM	DESCRIPTION	DATE	SATISFACTORY	APPROVED BY

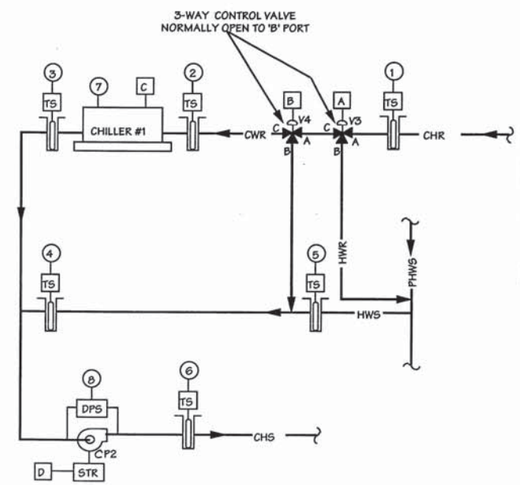

HEATING MODE CHWS TEMPERATURE SETPOINT RESET SCHEDULE	
O.A. TEMP	HWS TEMP
60	100
20	180

CHW LOOP CONTROL - WING A					
LOCAL DDC CONTROLLER					
OUTPUTS			INPUTS		
ANALOG	A	V3 CHANGEOVER	ANALOG	1	CHS TEMP
				2	CHR TEMP
DIGITAL	B	V4 CHANGEOVER		3	CWS TEMP
	C	PUMP START		4	CWR TEMP
	D	CHILLER #1 START		5	HWS TEMP
				6	BYPASS TEMP
			DIGITAL	7	CHILLER STATUS
				8	PUMP STATUS

CHW ZONE LOOP CONTROL - WING A

WINGS C,D,E SIMILAR

NO SCALE

M-41

HANBURY EVANS NEWILL VLATTAS
120 ATLANTIC STREET
NORFOLK, VIRGINIA 23510

MARABLE STRIFFLER & ASSOCIATES, P.C.
440 VIKING DR. SUITE 100
VA. BEACH VA. 23452
(804) 340-4441

COMMONWEALTH OF VIRGINIA
PETER C. STRIFFLER
No. 10465
PROFESSIONAL ENGINEER
#92005

JOB ORDER NO. 1250554
DES. PCS DR. JES CHK. GJM
BR. MGR.
SUBMITTED BY: DATE: 8/3/92
FIRM MEMBER / PRINCIPAL
BC D. RIGGS F.P. JOR
DIV. DIR. R. IVES
APPROVED: DATE: 07/9/92
SATISFACTORY TO ACTIVITY
APPROVED: DATE: 9/24/92
FOR CO FOR COMMANDER, NAVFAC

DEPARTMENT OF THE NAVY — NAVAL FACILITIES ENGINEERING COMMAND
NAVY PUBLIC WORKS CENTER
NAVAL STATION — NORFOLK, VIRGINIA

NAVAL STATION
NORFOLK VIRGINIA

INTERIOR AND EXTERIOR REPAIRS TO J-50

CONTROL DIAGRAMS

SIZE	CODE IDENT NO.	NAVFAC DRAWING NO.	PWC DRAWING NO.
D	80091	4,253,934	14335CU

CONSTR. CONTR. NO. N62470-91-B-0243
SCALE: GRAPHIC — SPEC. 05-91-0243 — SHEET 100 OF 126

LF-59 Record Drawings

LEGEND AND ABBREVIATIONS:

- PIPE TURNING UP
- PIPE TURNING DOWN
- HWS — HEATING WATER SUPPLY
- HWR — HEATING WATER RETURN
- LWS — LOOP WATER SUPPLY
- LWR — LOOP WATER RETURN
- D — CONDENSATE DRAIN LINE (AIR CONDITIONING)
- LPS — LOW PRESSURE STEAM (<15 PSIG)
- GATE VALVE
- BALL VALVE
- GLOBE VALVE
- BUTTERFLY VALVE
- CHECK VALVE
- STRAINER
- CALIBRATED BALANCING VALVE
- DV — DRAIN VALVE
- UNION
- RELIEF VALVE
- PRESSURE GAGE (WATER SERVICE)
- THERMOMETER
- FLEXIBLE PIPE CONNECTION
- DIRECTION OF FLOW
- DIRECTION OF PITCH DOWNWARD
- AAV — AUTOMATIC AIR VENT (AAV), MANUAL AIR VENT (MAV)
- CO — CLEANOUT

- DUCTWORK
- DUCT TURNING UP
- DUCT TURNING DOWN
- HIGH POINT — DROP OR RISE IN DUCT
- FLEXIBLE DUCT CONNECTION
- AD — DAMPER – AD (MOTOR OPERATED), FD (FIRE DAMPER), MD (MANUAL), BDD (BACK DRAFT)
- SUPPLY AIR (SA) DUCT IN SECTION
- RETURN AIR (RA)/EXHAUST AIR (EA) OR TRANSFER AIR (TA) DUCT IN SECTION
- OUTSIDE AIR DUCT (OA) IN SECTION
- ROUND DUCT IN SECTION
- DIFFUSER WITH BLOW PATTERN, AIR QUANTITY AND SIZE AS INDICATED
- SQUARE VANED ELBOW
- UNIT HEATER
- POINT OF CONNECTION
- H T — THERMOSTAT, HEATING ONLY
- C T — THERMOSTAT, COOLING ONLY
- H — WALL MOUNTED HUMIDISTAT
- S — WALL MOUNTED TEMPERATURE SENSOR
- 1 — DEMOLITION NOTE
- 1 — NEW WORK NOTE
- D1 150 — ASSOCIATED AIR QUANTITY (CFM)
  - 150 — AIR QUANTITY
  - D1 — DIFFUSER, REGISTER, OR GRILLE SIZE DESIGNATION WITH SEE DIFFUSER SCHEDULE FOR CORRESPONDING SIZE

- NEW WORK
- EXISTING TO REMAIN
- EXISTING TO BE REMOVED
- EG — EXHAUST GRILLE
- RG — RETURN FILTER GRILLE
- TG — TRANSFER GRILLE

AAV	AUTOMATIC AIR VENT
ACCU	AIR COOLED CONDENSING UNIT
AFF	ABOVE FINISHED FLOOR
AS	AIR SEPARATOR
AD	AUTOMATIC DAMPER
B.E.	BOTTOM ELEVATION
BTUH	BRITISH THERMAL UNIT PER HOUR
CENT.	CENTRIFUGAL
CFM	CUBIC FEET PER MINUTE
CUH	CABINET UNIT HEATER
ø	DIAMETER
ΔP	DIFFERENTIAL PRESSURE
DB	DRY BULB
DN	DOWN
ϕ	ELECTRICAL PHASE
EA	EXHAUST AIR
E.A.T.	ENTERING AIR TEMPERATURE
EF	EXHAUST FAN
E.S.P.	EXTERNAL STATIC PRESSURE
E.U.H.	ELECTRIC UNIT HEATER
E.W.T.	ENTERING WATER TEMPERATURE
FOB	FLAT ON BOTTOM
FOT	FLAT ON TOP
FPM	FEET PER MINUTE
GPM	GALLONS PER MINUTE
HORIZ.	HORIZONTAL
HGRH	HOT GAS REHEAT
HP	HORSEPOWER
IN. H_2O	INCHES OF WATER
KW	KILOWATT
L.A.T.	LEAVING AIR TEMPERATURE
L.W.T.	LEAVING WATER TEMPERATURE
MAV	MANUAL AIR VENT
MD	MANUAL DAMPER
MAX.	MAXIMUM
MIN.	MINIMUM
MOD	MODULATING
NO.	NUMBER
NOM	NOMINAL
OA	OUTSIDE AIR
PSIG	POUNDS PER SQUARE INCH – GAGE
PWSHP	PACKAGED WATER SOURCE HEAT PUMP
RA	RETURN AIR
RAFG	RETURN AIR FILTER GRILLE
RPM	REVOLUTIONS PER MINUTE
SA	SUPPLY AIR
SP	STATIC PRESSURE
TA	TRANSFER AIR
T.E.	TOP ELEVATION
TEMP.	TEMPERATURE
THRU	THROUGH
TYP.	TYPICAL
UH	UNIT HEATER
WB	WET BULB
WSHP	WATER SOURCE HEAT PUMP

GENERAL NOTES:

(APPLY TO ALL "M" SHEETS)

A. ALL DUCT DIMENSIONS ARE INSIDE CLEAR.

B. ALL DUCTWORK SHALL BE FLAT ON BOTTOM UNLESS NOTED OR SHOWN OTHERWISE.

C. ALL DUCTWORK SHALL BE ROUTED ABOVE CEILINGS OR IN CHASES UNLESS NOTED OR SHOWN OTHERWISE.

D. REFER TO ARCHITECTURAL REFLECTED CEILING PLANS FOR EXACT LOCATION OF ALL CEILING MOUNTED DIFFUSERS AND GRILLES.

E. CONTRACTOR SHALL COORDINATE HIS WORK WITH THE WORK OF ALL OTHER TRADES.

F. PROVIDE ALL MATERIALS AND EQUIPMENT AND PERFORM ALL LABOR REQUIRED TO INSTALL COMPLETE AND OPERABLE MECHANICAL SYSTEMS AS INDICATED ON DRAWINGS, AS SPECIFIED, AND AS REQUIRED BY CODE.

G. INSTALL ALL MECHANICAL EQUIPMENT AND APPURTENANCES IN ACCORDANCE WITH MANUFACTURER'S RECOMMENDATIONS, CONTRACT DOCUMENTS, AND APPLICABLE CODES AND REGULATIONS.

H. PROVIDE VIBRATION ISOLATION FOR ALL MECHANICAL EQUIPMENT TO PREVENT TRANSMISSION OF VIBRATION TO BUILDING STRUCTURE.

I. PROVIDE 1" AIR GAP BETWEEN AIR-CONDITIONING CONDENSATE DRAIN PIPING AND FLOOR DRAINS.

J. PROVIDE MANUAL AIR VENTS AT ALL HIGH POINTS IN THE LOOP WATER PIPING AND HEATING WATER PIPING SYSTEMS AND WHERE INDICATED, OUTSIDE OF THE MECHANICAL EQUIPMENT ROOM. PROVIDE AUTOMATIC AIR VENTS AT ALL HIGH POINTS IN THE LOOP WATER PIPING AND HEATING WATER PIPING SYSTEMS, AND WHERE INDICATED, WITHIN THE MECHANICAL EQUIPMENT ROOM. PROVIDE AIR VENT PIPING FROM AUTOMATIC AIR VENTS DOWN TO NEAREST FLOOR DRAIN. PROVIDE TWO FEET OF AIR VENT PIPING FROM MANUAL AIR VENTS, TURN PIPE DOWN.

K. PROVIDE DRAIN VALVES AT ALL LOW POINTS IN THE LOOP WATER PIPING AND HEATING WATER PIPING SYSTEMS.

L. ALL MECHANICAL PENETRATIONS THROUGH FIRE RATED ASSEMBLIES SHALL MEET OR EXCEED THE RATING OF THE ASSEMBLY BEING PENETRATED. PENETRATIONS THROUGH FIRE RATED ASSEMBLIES SHALL BE IN ACCORDANCE WITH THE UNDERWRITERS LABORATORIES (UL) AND THE IBC.

M. CHAMFER ALL EDGES OF NEW MECHANICAL EQUIPMENT PADS.

N. FIRE DAMPERS SHALL BE INSTALLED PER THE MANUFACTURER'S INSTALLATION INSTRUCTIONS.

O. AUTOMATED LOGIC SHALL TAG AND "MAKE SAFE" ALL BAS CONTROL PANELS, COMPONENTS, AND COMMUNICATIONS TO BE SAVED AND NOT DEMOLISHED PRIOR TO GENERAL DEMOLITION WORK COMMENCEMENT.

NO.	DESCRIPTION	DATE	APVD

NAVFAC

COMMONWEALTH OF VIRGINIA
DONALD M. GAY
Lic. No. 16234
PROFESSIONAL ENGINEER
SEAL

MMM DESIGN GROUP
ARCHITECTS • ENGINEERS • PLANNERS
300 EAST MAIN STREET
NORFOLK, VIRGINIA 23510
757-623-1641

TST
Turner-Strategic Technologies

APPROVED
FOR COMMANDER NAVFAC
ACTIVITY
SATISFACTORY TO DATE

DES	MTF	DRW	WFC	CHK	DMG

PROJECT MANAGER –
BRANCH MANAGER
CHIEF ENG/ARCH
DATE: MAY 11, 2012

DEPARTMENT OF THE NAVY
NAVAL FACILITIES ENGINEERING COMMAND
HAMPTON ROADS IPT
NAVAL FACILITIES ENGINEERING COMMAND ~ MID-ATLANTIC
NORFOLK, VIRGINIA
NAVAL STATION NORFOLK
NORFOLK, VIRGINIA
LF-59 HANGAR BAY FACILITY
HVAC LEGEND, ABBREVIATIONS AND GENERAL NOTES

SCALE: AS NOTED
EPROJECT NO.: 1038784
CONSTR. CONTR. NO. N40085-11-D-6589 0004-01
NAVFAC DRAWING NO. 12615717
SHEET 41 OF X

M-001

DRAWFORM REVISION: 10 MARCH 2009

REV/DATE: FILE NAME: K:\1161200\Working Drawings\Hangar Bay NSN – AutoCAD\Sheets\Construction\M-MECHANICAL\BLDGLF59-1038784-M-001.dwg LAYOUT NAME: M-001 HVAC LEGEND ABBREVIATIONS AND GENERAL NOTES PLOTTED: Friday, May 11, 2012 – 12:27pm

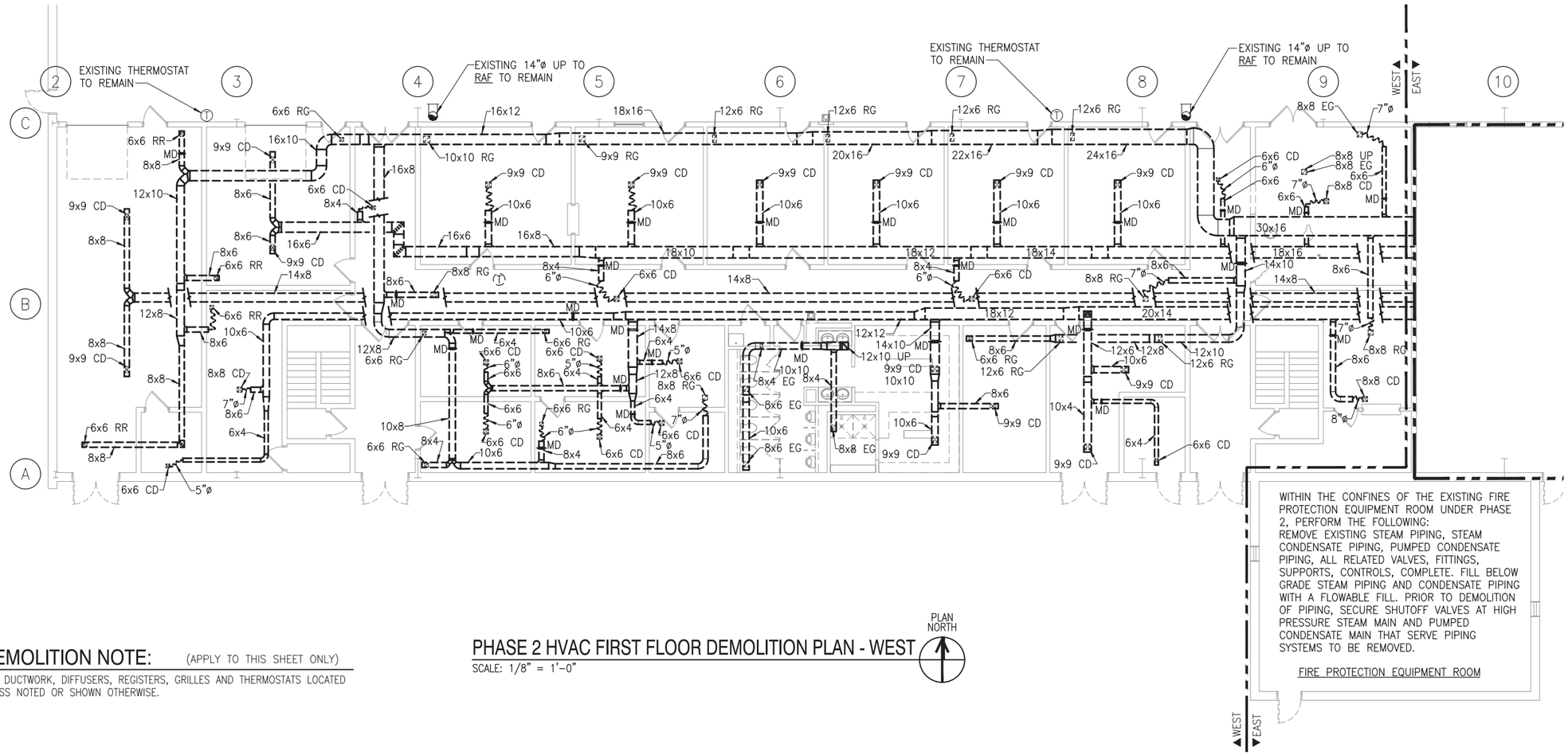

GENERAL DEMOLITION NOTE: (APPLY TO THIS SHEET ONLY)

REMOVE ALL EXISTING DUCTWORK, DIFFUSERS, REGISTERS, GRILLES AND THERMOSTATS LOCATED ON THIS FLOOR UNLESS NOTED OR SHOWN OTHERWISE.

PHASE 2 HVAC FIRST FLOOR DEMOLITION PLAN - WEST

SCALE: 1/8" = 1'-0"

PLAN NORTH

GRAPHIC SCALE:

1/8" = 1'-0" 5' 0 5' 10' 15'

SYM	DESCRIPTION	DATE	APVD

NAVFAC

COMMONWEALTH OF VIRGINIA
DONALD M. GAY
Lic. No. 16234
PROFESSIONAL ENGINEER
SEAL

MMM DESIGN GROUP
ARCHITECTS•ENGINEERS•PLANNERS
300 EAST MAIN STREET
NORFOLK, VIRGINIA 23510
757-623-1641

TST Turner-Strategic Technologies

APPROVED
FOR COMMANDER NAVFAC
ACTIVITY
SATISFACTORY TO DATE

DES	MTF	DRW	WFC	CHK	DMG

PROJECT MANAGER –
BRANCH MANAGER
CHIEF ENG/ARCH
DATE: MAY 11, 2012

DEPARTMENT OF THE NAVY
NAVAL FACILITIES ENGINEERING COMMAND
HAMPTON ROADS IPT
NAVAL FACILITIES ENGINEERING COMMAND – MID-ATLANTIC
NORFOLK, VIRGINIA
NAVAL STATION NORFOLK
NORFOLK, VIRGINIA
LF-59 HANGAR BAY FACILITY
PHASE 2 HVAC FIRST FLOOR DEMOLITION PLAN – WEST

SCALE: AS NOTED
EPROJECT NO.: 1038784
CONSTR. CONTR. NO. N40085-11-D-6589 0004-01
NAVFAC DRAWING NO. 12615718
SHEET 42 OF X

MD101

DRAWFORM REVISION: 10 MARCH 2009

REVDATE: FILE NAME: R:\1161200\Working Drawings\Hanger Bay, NSN – AutoCAD\Sheets\Construction\M-MECHANICAL\BLDG2LF59-1038784-MD101.dwg LAYOUT NAME: MD101 PHASE 2 HVAC FIRST FLOOR DEMOLITION PLAN – WEST PLOTTED: Friday, May 11, 2012 – 12:27pm

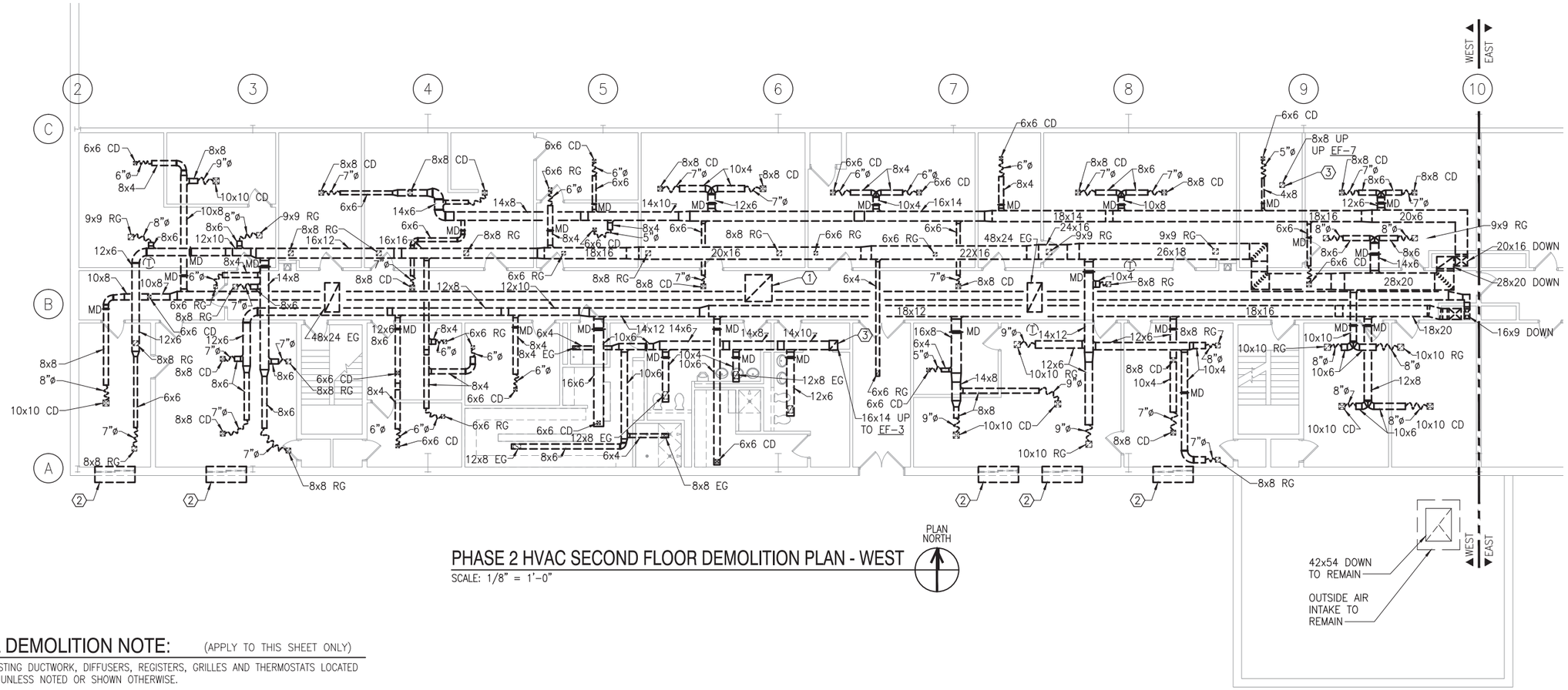

PHASE 2 HVAC SECOND FLOOR DEMOLITION PLAN - WEST

SCALE: 1/8" = 1'-0"

PLAN NORTH

GENERAL DEMOLITION NOTE: (APPLY TO THIS SHEET ONLY)

REMOVE ALL EXISTING DUCTWORK, DIFFUSERS, REGISTERS, GRILLES AND THERMOSTATS LOCATED ON THIS FLOOR UNLESS NOTED OR SHOWN OTHERWISE.

DEMOLITION NOTES: ⬡ (APPLY TO THIS SHEET ONLY)

1. REMOVE EXISTING 44x44 DUCT UP THROUGH ROOF, CURB, AND ROOF MOUNTED RELIEF AIR VENT.
2. REMOVE EXISTING WINDOW AIR-CONDITIONING UNIT. TURN OVER TO CONTRACTING OFFICER.
3. REMOVE EXISTING EF, CURB, AND CONTROLS IN THEIR ENTIRETY.

GRAPHIC SCALE:

1/8" = 1'-0" 5' 0 5' 10' 15'

SYM	DESCRIPTION	DATE	APPR

NAVFAC

COMMONWEALTH OF VIRGINIA
DONALD M. GAY
Lic. No. 16234
PROFESSIONAL ENGINEER
SEAL

MMM DESIGN GROUP
ARCHITECTS•ENGINEERS•PLANNERS
300 EAST MAIN STREET
NORFOLK, VIRGINIA 23510
757-623-1641

TST Turner-Strategic Technologies

APPROVED
FOR COMMANDER NAVFAC
ACTIVITY
SATISFACTORY TO DATE

DES	MTF	DRW	WFC	CHK	DMG

PROJECT MANAGER –
BRANCH MANAGER
CHIEF ENG/ARCH
DATE: MAY 11, 2012

DEPARTMENT OF THE NAVY
NAVAL FACILITIES ENGINEERING COMMAND
HAMPTON ROADS IPT
NAVAL FACILITIES ENGINEERING COMMAND ~ MID-ATLANTIC
NORFOLK, VIRGINIA
NAVAL STATION NORFOLK
NORFOLK, VIRGINIA
LF-59 HANGAR BAY FACILITY
PHASE 2 HVAC SECOND FLOOR DEMOLITION PLAN – WEST

SCALE: AS NOTED
EPROJECT NO.: 1038784
CONSTR. CONTR. NO. N40085-11-D-6589 0004-01
NAVFAC DRAWING NO. 12615719
SHEET 43 OF X

MD102

DRAWFORM REVISION: 10 MARCH 2009

REV/DATE: FILE NAME: K:\1161200\Working Drawings\Hangar Bay NSN – AutoCAD\Sheets\Construction\M-MECHANICAL\BLDQLF59-1038784-MD102.dwg LAYOUT NAME: MD102 PHASE 2 HVAC SECOND FLOOR DEMOLITION PLAN – WEST PLOTTED: Friday, May 11, 2012 – 12:27pm

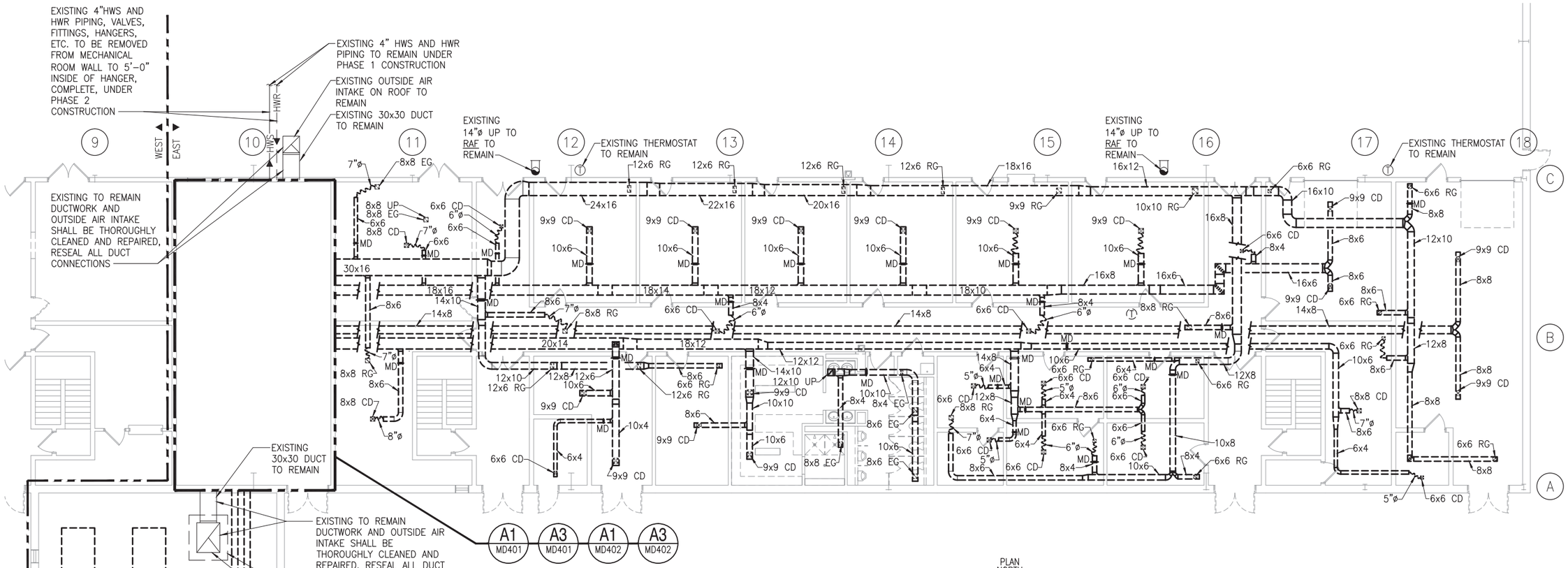

PHASE 1 HVAC FIRST FLOOR DEMOLITION PLAN - EAST

SCALE: 1/8" = 1'-0"

GENERAL DEMOLITION NOTE: (APPLY TO THIS SHEET ONLY)

REMOVE ALL EXISTING DUCTWORK, DIFFUSERS, REGISTERS, GRILLES AND THERMOSTATS LOCATED ON THIS FLOOR UNLESS NOTED OR SHOWN OTHERWISE.

GRAPHIC SCALE:

1/8" = 1'-0" 5' 0 5' 10' 15'

SYM	DESCRIPTION	DATE	APVR

NAVFAC

COMMONWEALTH OF VIRGINIA
DONALD M. GAY
Lic. No. 16234
PROFESSIONAL ENGINEER
SEAL

MMM DESIGN GROUP
ARCHITECTS•ENGINEERS•PLANNERS
300 EAST MAIN STREET
NORFOLK, VIRGINIA 23510
757-623-1641

TST Turner-Strategic Technologies

APPROVED
FOR COMMANDER NAVFAC
ACTIVITY
SATISFACTORY TO DATE

DES	MTF	DRW	WFC	CHK	DMC

PROJECT MANAGER –
BRANCH MANAGER
CHIEF ENG/ARCH
DATE: MAY 11, 2012

DEPARTMENT OF THE NAVY
NAVAL FACILITIES ENGINEERING COMMAND
HAMPTON ROADS IPT
NAVAL FACILITIES ENGINEERING COMMAND ~ MID-ATLANTIC
NORFOLK, VIRGINIA
NAVAL STATION NORFOLK
NORFOLK, VIRGINIA
LF-59 HANGAR BAY FACILITY
PHASE 1 HVAC FIRST FLOOR DEMOLITION PLAN – EAST

SCALE: AS NOTED
EPROJECT NO.: 1038784
CONSTR. CONTR. NO. N40085-11-D-6589 0004-01
NAVFAC DRAWING NO. 12615720
SHEET 44 OF X

MD103

DRAWFORM REVISION: 10 MARCH 2009

REV/DATE: FILE NAME: K:\1161200\Working Drawings\Hangar Bay NSN – AutoCAD\Sheets\Construction\M-MECHANICAL\BLDGLF59-1038784-MD103.dwg LAYOUT NAME: MD103 PHASE 1 HVAC FIRST FLOOR DEMOLITION PLAN – EAST PLOTTED: Friday, May 11, 2012 – 12:27pm

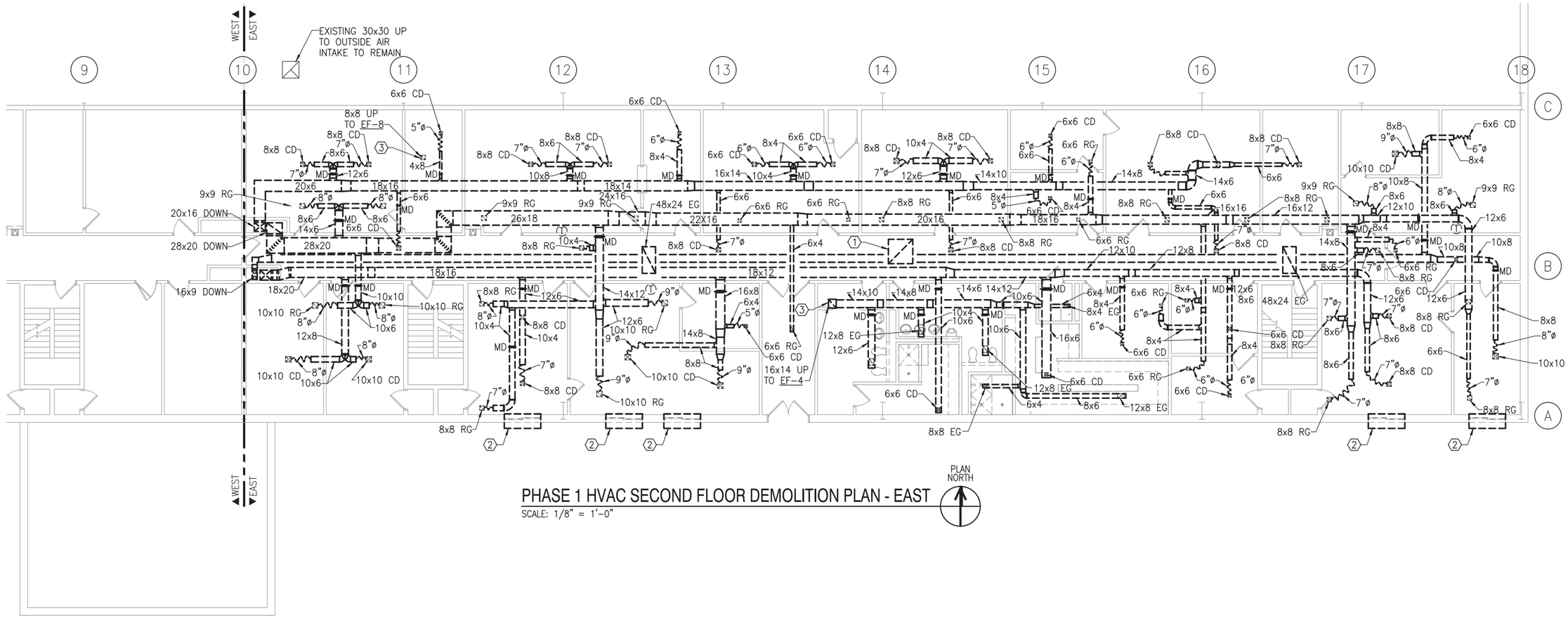

PHASE 1 HVAC SECOND FLOOR DEMOLITION PLAN - EAST

SCALE: 1/8" = 1'-0"

PLAN NORTH

GENERAL DEMOLITION NOTE: (APPLY TO THIS SHEET ONLY)

REMOVE ALL EXISTING DUCTWORK, DIFFUSERS, REGISTERS, GRILLES AND THERMOSTATS LOCATED ON THIS FLOOR UNLESS NOTED OR SHOWN OTHERWISE.

DEMOLITION NOTES: ⬡ (APPLY TO THIS SHEET ONLY)

1. REMOVE EXISTING 44x44 DUCT UP THROUGH ROOF, CURB, AND ROOF MOUNTED RELIEF AIR VENT.
2. REMOVE EXISTING WINDOW AIR-CONDITIONING UNIT. TURN UNIT OVER TO CONTRACTING OFFICER.
3. REMOVE EXISTING EF, CURB, AND CONTROLS IN THEIR ENTIRETY.

GRAPHIC SCALE:

1/8" = 1'-0" 5' 0 5' 10' 15'

SYM	DESCRIPTION	DATE	APVD

NAVFAC

COMMONWEALTH OF VIRGINIA
DONALD M. GAY
Lic. No. 16234
PROFESSIONAL ENGINEER
SEAL

MMM DESIGN GROUP
ARCHITECTS • ENGINEERS • PLANNERS
300 EAST MAIN STREET
NORFOLK, VIRGINIA 23510
757-623-1641

TST Turner-Strategic Technologies

APPROVED
FOR COMMANDER NAVFAC
ACTIVITY
SATISFACTORY TO DATE

DES	MTF	DRW	WFC	CHK	DMG

PROJECT MANAGER –
BRANCH MANAGER
CHIEF ENG/ARCH
DATE: MAY 11, 2012

DEPARTMENT OF THE NAVY
NAVAL FACILITIES ENGINEERING COMMAND
HAMPTON ROADS IPT
NAVAL FACILITIES ENGINEERING COMMAND ~ MID-ATLANTIC
NORFOLK, VIRGINIA
NAVAL STATION NORFOLK
NORFOLK, VIRGINIA
LF-59 HANGAR BAY FACILITY
PHASE 1 HVAC SECOND FLOOR DEMOLITION PLAN – EAST

SCALE: AS NOTED
EPROJECT NO.: 1038784
CONSTR. CONTR. NO. N40085-11-D-6589 0004-01
NAVFAC DRAWING NO. 12615721
SHEET 45 OF X

MD104

DRAWFORM REVISION: 10 MARCH 2009

REV/DATE: FILE NAME: K:\1161200\Working Drawings\Hangar Bay NSN – AutoCAD\Sheets\Construction\M-MECHANICAL\BLDQLF59-1038784-MD104.dwg LAYOUT NAME: MD104 PHASE 1 HVAC SECOND FLOOR DEMOLITION PLAN – EAST PLOTTED: Friday, May 11, 2012 – 12:27pm

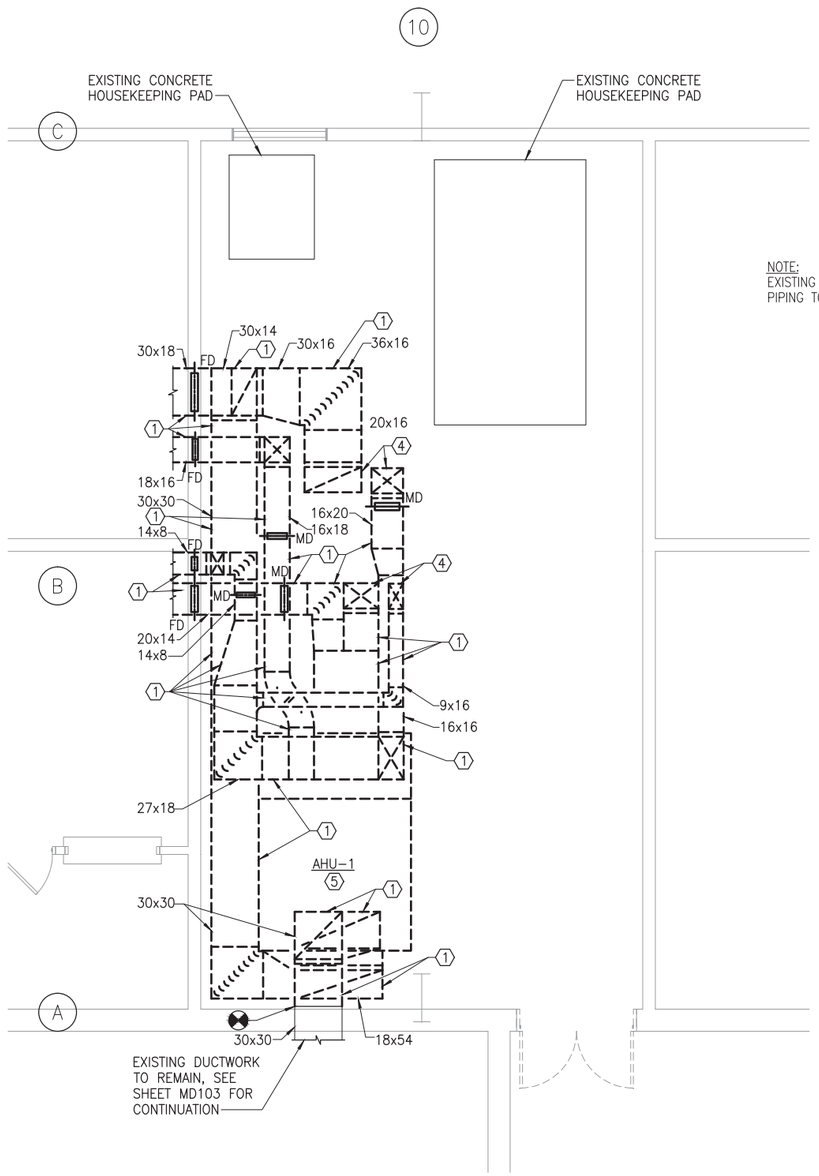

NOTE:
EXISTING FOAM SPRINKLER PIPING TO REMAIN

PHASE 2 HVAC MECHANICAL ROOM ENLARGED DEMOLITION DUCTWORK PLAN

SCALE: 1/4" = 1'-0"

MD103 A1

PLAN NORTH

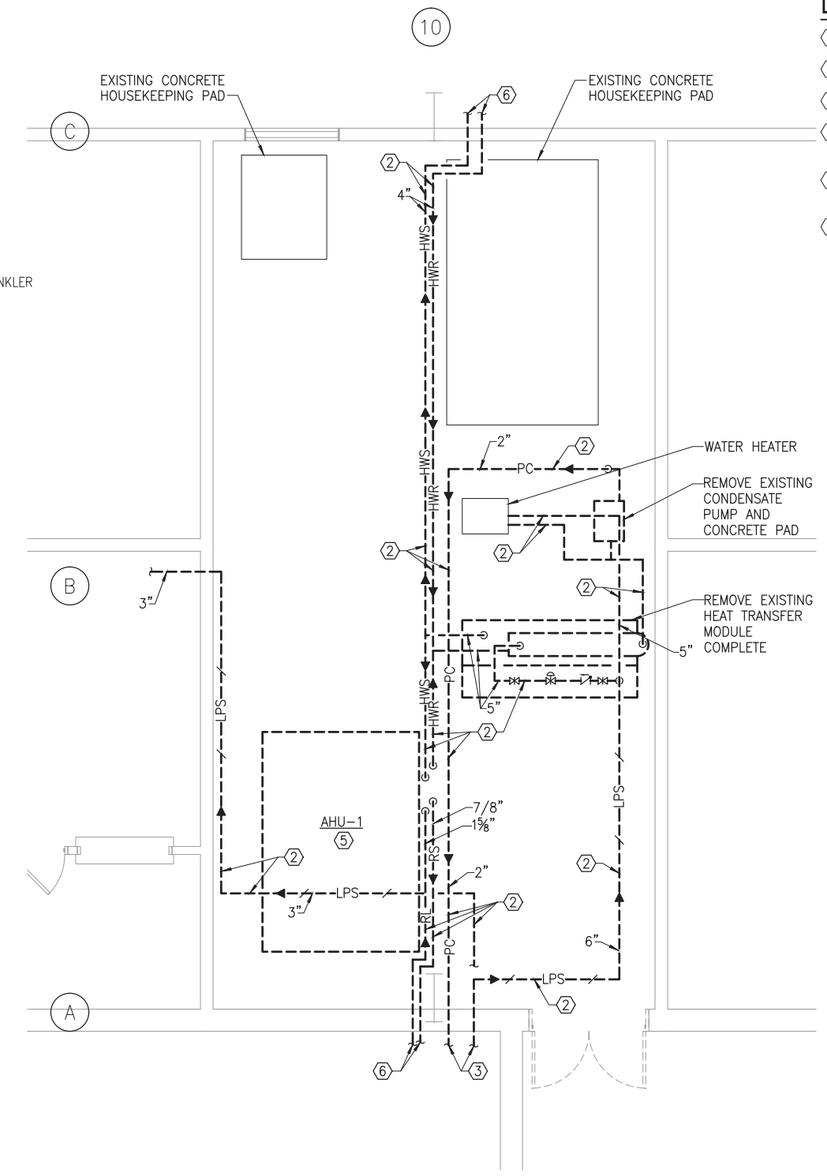

PHASE 2 HVAC MECHANICAL ROOM ENLARGED DEMOLITION PIPING PLAN

SCALE: 1/4" = 1'-0"

MD103 A3

PLAN NORTH

DEMOLITION NOTES: (APPLY TO THIS SHEET ONLY)

1. REMOVE EXISTING DUCTWORK, HANGERS, ETC.
2. REMOVE EXISTING PIPING, VALVES, FITTINGS, HANGERS, SUPPORTS, ETC.
3. SEE NOTE IN FIRE PROTECTION EQUIPMENT ROOM ON SHEET MD101.
4. REMOVE EXISTING VERTICAL DUCTWORK AND SUPPORTS UP TO THE SECOND FLOOR. SEE SHEET MD102 FOR CONTINUATION.
5. REMOVE EXISTING AHU-1, INCLUDING VIBRATION ISOLATORS. EXISTING CONCRETE PAD TO REMAIN.
6. FOR CONTINUATION SEE SHEET MD103.

GRAPHIC SCALE:

1/4" = 1'-0" 5' 0 5'

SYM	DESCRIPTION	DATE	APVR

NAVFAC

COMMONWEALTH OF VIRGINIA
DONALD M. GAY
Lic. No. 16234
PROFESSIONAL ENGINEER
SEAL

MMM DESIGN GROUP
ARCHITECTS+ENGINEERS+PLANNERS
300 EAST MAIN STREET
NORFOLK, VIRGINIA 23510
757-623-1641

TST Turner-Strategic Technologies

APPROVED
FOR COMMANDER NAVFAC
ACTIVITY
SATISFACTORY TO DATE

DES MTF DRW WFC CHK DMC
PROJECT MANAGER –
BRANCH MANAGER
CHIEF ENG/ARCH
DATE: MAY 11, 2012

DEPARTMENT OF THE NAVY
NAVAL FACILITIES ENGINEERING COMMAND
NAVAL FACILITIES ENGINEERING COMMAND ~ MID-ATLANTIC
HAMPTON ROADS IPT
NORFOLK, VIRGINIA
NAVAL STATION NORFOLK
NORFOLK, VIRGINIA
LF-59 HANGAR BAY FACILITY
PHASE 2 HVAC MECHANICAL ROOM ENLARGED DEMOLITION PLANS

SCALE: AS NOTED
EPROJECT NO.: 1038784
CONSTR. CONTR. NO. N40085-11-D-6589 0004-01
NAVFAC DRAWING NO. 12615722
SHEET 46 OF X

MD401

DRAWFORM REVISION: 10 MARCH 2009

REV/DATE: FILE NAME: K:\1161200\Working Drawings\Hangar Bay NSN – AutoCAD\Sheets\Construction\M-MECHANICAL\BLDG1F59-1038784-MD401.dwg LAYOUT NAME: MD401 PHASE 2 HVAC MECHANICAL ROOM ENLARGED DEMOLITION PLANS PLOTTED: Friday, May 11, 2012 – 12:27pm

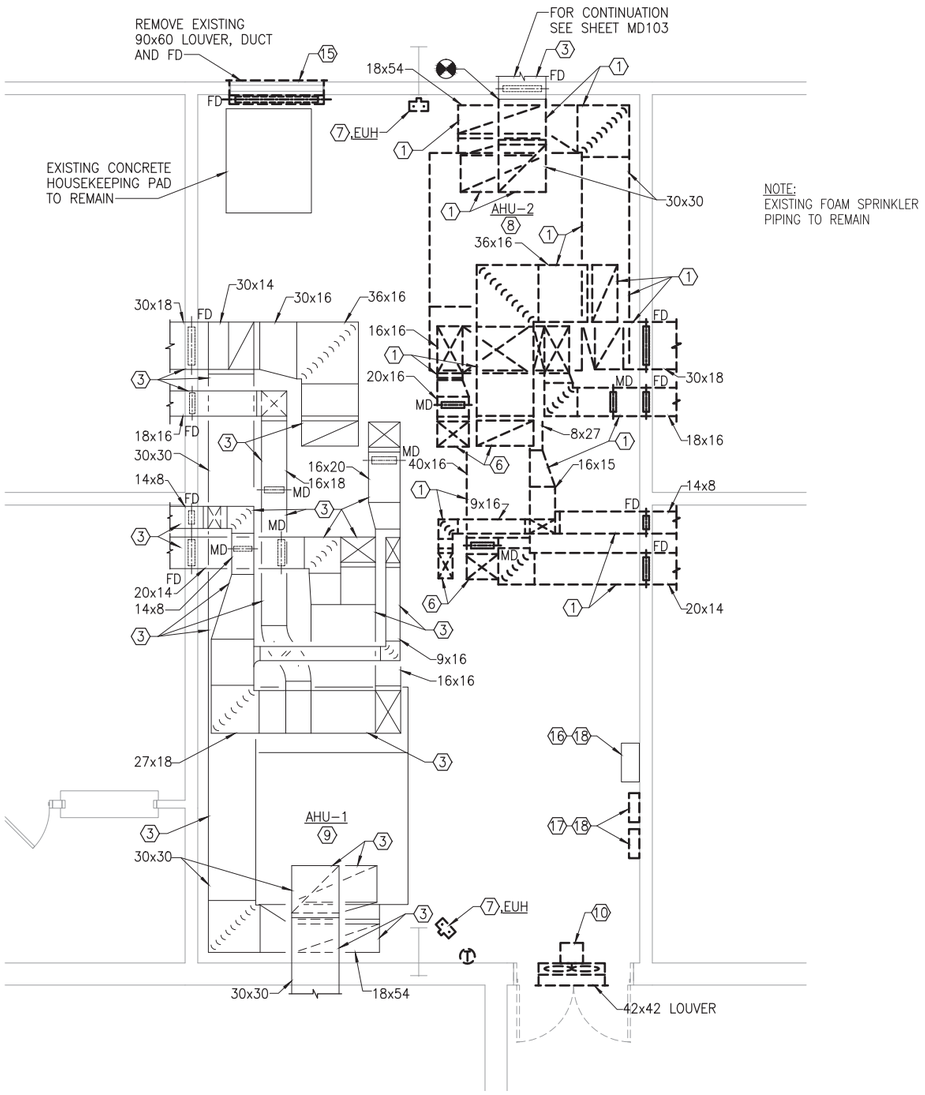

NOTE:
EXISTING FOAM SPRINKLER PIPING TO REMAIN

PHASE 1 HVAC MECHANICAL ROOM ENLARGED DEMOLITION DUCTWORK PLAN

SCALE: 1/4" = 1'-0"

MD103 A1

PLAN NORTH

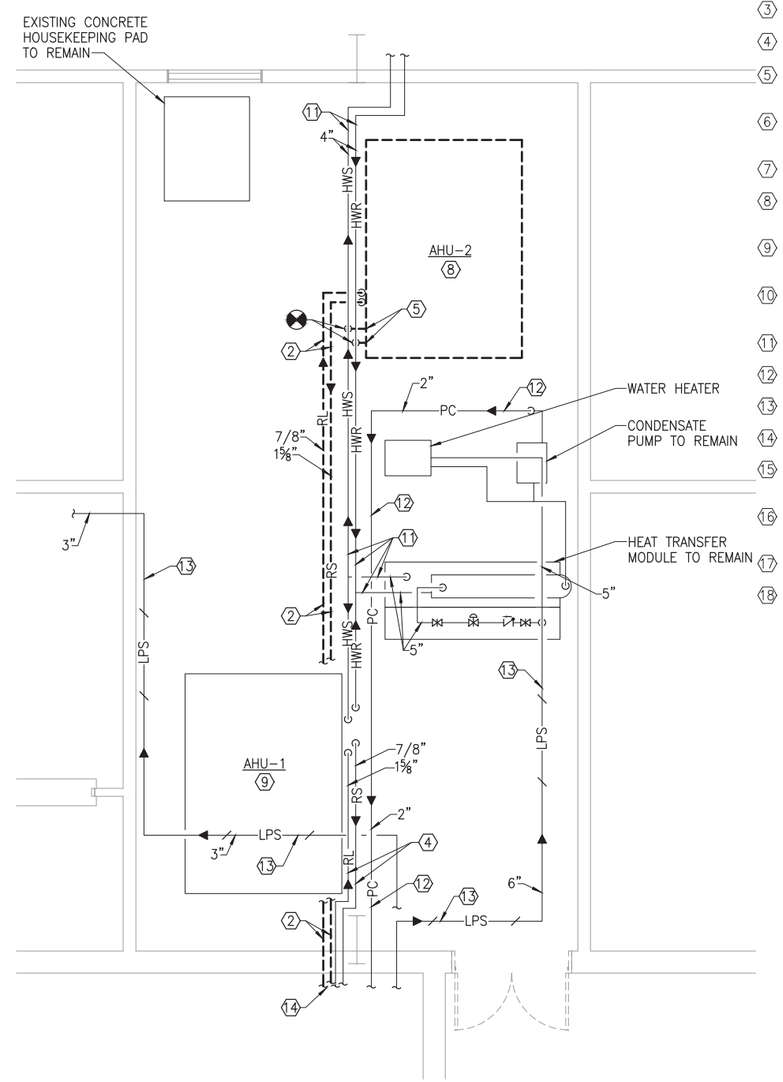

PHASE 1 HVAC MECHANICAL ROOM ENLARGED DEMOLITION PIPING PLAN

SCALE: 1/4" = 1'-0"

MD103 A3

PLAN NORTH

DEMOLITION NOTES: ⬡ (APPLY TO THIS SHEET ONLY)

1. REMOVE EXISTING DUCTWORK, HANGERS, ETC.
2. REMOVE EXISTING REFRIGERANT PIPING, HANGERS, ETC.
3. EXISTING DUCTWORK TO REMAIN.
4. EXISTING REFRIGERANT PIPING TO REMAIN.
5. REMOVE EXISTING 1½"HWS AND HWR PIPING FROM AHU-2 TO THE ISOLATION VALVE.
6. REMOVE EXISTING VERTICAL DUCTWORK AND SUPPORTS UP TO SECOND FLOOR. SEE SHEET MD104 FOR CONTINUATION.
7. REMOVE EXISTING EUH COMPLETE, INCLUDING ALL CONTROLS AND HANGERS.
8. REMOVE EXISTING AHU-2, INCLUDING VIBRATION ISOLATORS. EXISTING CONCRETE PAD TO REMAIN.
9. EXISTING AHU-1 TO REMAIN, INCLUDING ALL CONTROLS, DUCTWORK AND PIPING. UNIT SHALL REMAIN FULLY FUNCTIONAL.
10. REMOVE EXISTING EXHAUST FAN COMPLETE, INCLUDING ALL CONTROLS AND SUPPORTS.
11. EXISTING HEATING WATER PIPING TO REMAIN.
12. EXISTING PUMPED CONDENSATE PIPING TO REMAIN.
13. EXISTING LOW PRESSURE STEAM PIPING TO REMAIN.
14. FOR CONTINUATION SEE SHEET MD103.
15. CAREFULLY REMOVE EXISTING LOUVER AND FIRE SHUTTER AND HOLD FOR REUSE.
16. DDC CABINET TO BE REUSED. CONTROLS CONTRACTOR SHALL REUSE AND SALVAGE COMPONENTS.
17. REMOVE EXISTING CABINETS WITH TERMINAL STRIPS.
18. CONTROLS CONTRACTOR SHALL VERIFY WHAT CAN BE REMOVED AND WHAT HAS TO REMAIN DURING THE PHASES OF CONSTRUCTION.

GRAPHIC SCALE:

1/4" = 1'-0" 5' 0 5'

NO.	DESCRIPTION	DATE	APVD

NAVFAC

COMMONWEALTH OF VIRGINIA
DONALD M. GAY
Lic. No. 16234
PROFESSIONAL ENGINEER
SEAL

MMM DESIGN GROUP
ARCHITECTS•ENGINEERS•PLANNERS
300 EAST MAIN STREET
NORFOLK, VIRGINIA 23510
757-623-1641

TST Turner-Strategic Technologies

APPROVED

FOR COMMANDER NAVFAC

ACTIVITY

SATISFACTORY TO DATE

DES	MTF	DRW	WFC	CHK	DMG

PROJECT MANAGER –

BRANCH MANAGER

CHIEF ENG/ARCH

DATE: MAY 11, 2012

DEPARTMENT OF THE NAVY
NAVAL FACILITIES ENGINEERING COMMAND
HAMPTON ROADS IPT
NAVAL FACILITIES ENGINEERING COMMAND ~ MID-ATLANTIC
NORFOLK, VIRGINIA
NAVAL STATION NORFOLK
NORFOLK, VIRGINIA

LF-59 HANGAR BAY FACILITY

PHASE 1 HVAC MECHANICAL ROOM ENLARGED DEMOLITION PLANS

SCALE: AS NOTED

EPROJECT NO.: 1038784

CONSTR. CONTR. NO. N40085-11-D-6589 0004-01

NAVFAC DRAWING NO. 12615723

SHEET 47 OF X

MD402

DRAWFORM REVISION: 10 MARCH 2009

REV/DATE: FILE NAME: K:\1161200\Working Drawings\Hangar Bay, NSN – AutoCAD\Sheets\Construction\M-MECHANICAL\BLDGLF59-1038784-MD402.dwg LAYOUT NAME: MD402 PHASE 1 HVAC MECHANICAL ROOM ENLARGED DEMOLITION PLANS PLOTTED: Friday, May 11, 2012 – 12:28pm

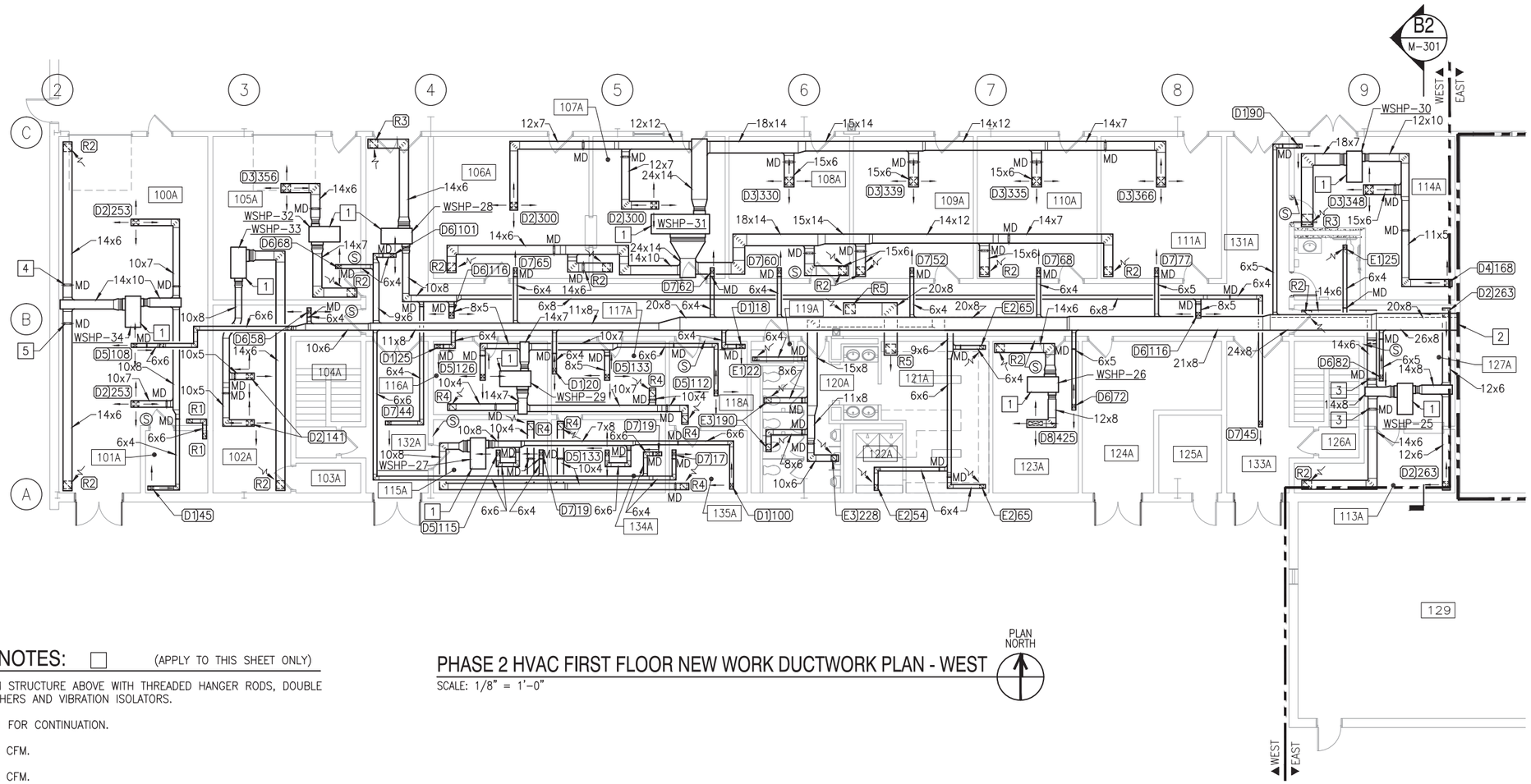

NEW WORK NOTES: ☐ (APPLY TO THIS SHEET ONLY)

1. UNIT HUNG FROM STRUCTURE ABOVE WITH THREADED HANGER RODS, DOUBLE LOCK NUTS, WASHERS AND VIBRATION ISOLATORS.
2. SEE SHEET M401 FOR CONTINUATION.
3. BALANCE TO 263 CFM.
4. BALANCE TO 275 CFM.
5. BALANCE TO 276 CFM.

GENERAL NEW WORK NOTE: (APPLY TO THIS SHEET ONLY)

COORDINATE ROUTING OF NEW DUCTWORK, NEW PIPING, AND LOCATION OF NEW WSHP'S WITH EXISTING ELECTRICAL CONDUIT, SIGNAL CABLING, AND FIRE PROTECTION PIPING TO REMAIN. CONTRACTOR SHALL FIELD VERIFY LOCATION OF EXISTING TO REMAIN EQUIPMENT, PIPING, CONDUIT, ETC.

PHASE 2 HVAC FIRST FLOOR NEW WORK DUCTWORK PLAN - WEST

SCALE: 1/8" = 1'-0"

PLAN NORTH

GRAPHIC SCALE:

1/8" = 1'-0" 5' 0 5' 10' 15'

SYM	DESCRIPTION	DATE	APPR

NAVFAC

COMMONWEALTH OF VIRGINIA
DONALD M. GAY
Lic. No. 16234
PROFESSIONAL ENGINEER
SEAL

MMM DESIGN GROUP
ARCHITECTS•ENGINEERS•PLANNERS
300 EAST MAIN STREET
NORFOLK, VIRGINIA 23510
757-623-1641

TST Turner-Strategic Technologies

APPROVED

FOR COMMANDER NAVFAC

ACTIVITY

SATISFACTORY TO DATE

DES MTF | DRW WFC | CHK DMG

PROJECT MANAGER –

BRANCH MANAGER

CHIEF ENG/ARCH

DATE: MAY 11, 2012

DEPARTMENT OF THE NAVY
NAVAL FACILITIES ENGINEERING COMMAND
HAMPTON ROADS IPT
NAVAL FACILITIES ENGINEERING COMMAND ~ MID-ATLANTIC
NORFOLK, VIRGINIA
NAVAL STATION NORFOLK
NORFOLK, VIRGINIA
LF-59 HANGAR BAY FACILITY
PHASE 2 HVAC FIRST FLOOR NEW WORK DUCTWORK PLAN - WEST

SCALE: AS NOTED
EPROJECT NO.: 1038784
CONSTR. CONTR. NO. N40085-11-D-6589 0004-01
NAVFAC DRAWING NO. 12615724
SHEET 48 OF X

M-101

DRAWFORM REVISION: 10 MARCH 2009

REV/DATE: FILE NAME: K:\1161200\Working Drawings\Hanger Bay NSN - AutoCAD\Sheets\Construction\M-MECHANICAL\BLDGLF59-1038784-M-101.dwg LAYOUT NAME: M-101 PHASE 2 HVAC FIRST FLOOR NEW WORK DUCTWORK PLAN - WEST PLOTTED: Friday, May 11, 2012 - 12:28pm

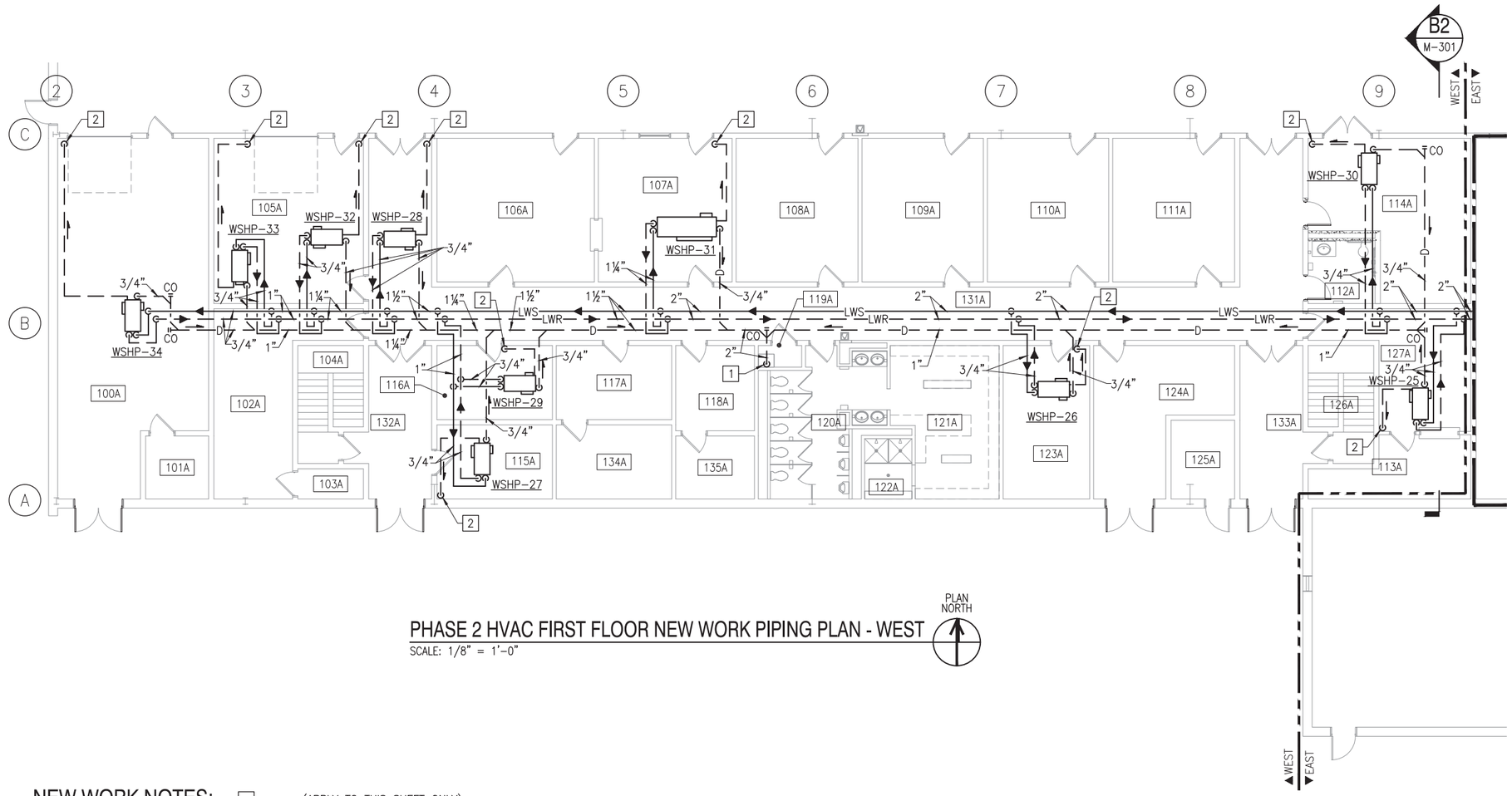

PHASE 2 HVAC FIRST FLOOR NEW WORK PIPING PLAN - WEST

SCALE: 1/8" = 1'-0"

NEW WORK NOTES: ☐ (APPLY TO THIS SHEET ONLY)

1. 2" CONDENSATE DRAIN DOWN TO 6" ABOVE SINK RIM.
2. TURN 3/4" EMERGENCY DRIP PAN DRAIN LINE 1½" DOWN TO BELOW CEILING, PROVIDE ESCUTCHEON PLATE.

GENERAL NEW WORK NOTE: (APPLY TO THIS SHEET ONLY)

COORDINATE ROUTING OF NEW DUCTWORK, NEW PIPING, AND LOCATION OF NEW WSHP'S WITH EXISTING ELECTRICAL CONDUIT, SIGNAL CABLING, AND FIRE PROTECTION PIPING TO REMAIN. CONTRACTOR SHALL FIELD VERIFY LOCATION OF EXISTING TO REMAIN EQUIPMENT, PIPING, CONDUIT, ETC.

GRAPHIC SCALE:

1/8" = 1'-0" 5' 0 5' 10' 15'

SYM	DESCRIPTION	DATE	APVD

NAVFAC

COMMONWEALTH OF VIRGINIA
DONALD M. GAY
Lic. No. 16234
PROFESSIONAL ENGINEER
SEAL

MMM DESIGN GROUP
ARCHITECTS•ENGINEERS•PLANNERS
300 EAST MAIN STREET
NORFOLK, VIRGINIA 23510
757-623-1641

TST Turner-Strategic Technologies

APPROVED
FOR COMMANDER NAVFAC
ACTIVITY
SATISFACTORY TO DATE

DES MTF	DRW WFC	CHK DMG

PROJECT MANAGER –
BRANCH MANAGER
CHIEF ENG/ARCH
DATE: MAY 11, 2012

DEPARTMENT OF THE NAVY
NAVAL FACILITIES ENGINEERING COMMAND
HAMPTON ROADS IPT
NAVAL FACILITIES ENGINEERING COMMAND ~ MID-ATLANTIC
NORFOLK, VIRGINIA
NAVAL STATION NORFOLK
NORFOLK, VIRGINIA
LF-59 HANGAR BAY FACILITY
PHASE 2 HVAC FIRST FLOOR NEW WORK PIPING PLAN – WEST

SCALE: AS NOTED
EPROJECT NO.: 1038784
CONSTR. CONTR. NO. N40085-11-D-6589 0004-01
NAVFAC DRAWING NO. 12615725
SHEET 49 OF X

M-102

DRAWFORM REVISION: 10 MARCH 2009

REVDATE: FILE NAME: K:\1161200\Working Drawings\Hangar Bay NSN - AutoCAD\Sheets\Construction\M-MECHANICAL\BLDG2LF59-1038784-M-102.dwg LAYOUT NAME: M-102 PHASE 2 HVAC FIRST FLOOR NEW WORK PIPING PLAN - WEST PLOTTED: Friday, May 11, 2012 - 12:28pm

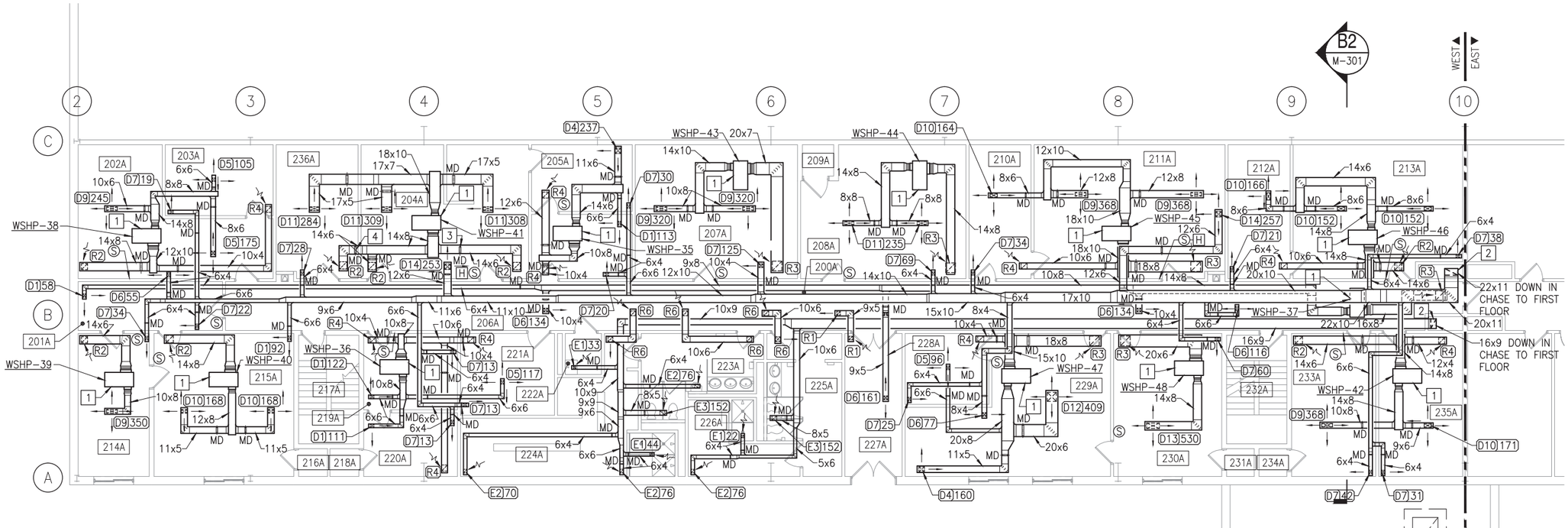

PHASE 2 HVAC SECOND FLOOR NEW WORK DUCTWORK PLAN - WEST

SCALE: 1/8" = 1'-0"

PLAN NORTH

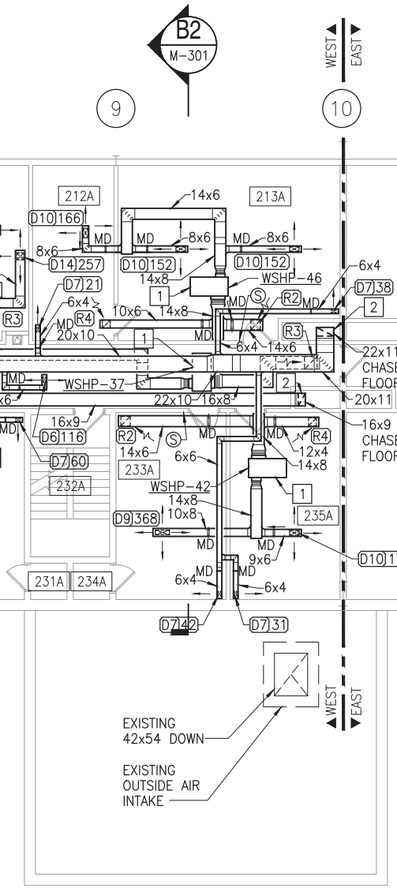

NEW WORK NOTES: ☐ (APPLY TO THIS SHEET ONLY)

1. UNIT HUNG FROM STRUCTURE ABOVE WITH THREADED HANGER RODS, DOUBLE LOCK NUTS, WASHERS AND VIBRATION ISOLATORS.
2. FOR CONTINUATION SEE SHEET M401.
3. BALANCE TO 308 CFM.
4. BALANCE TO 309 CFM.

GENERAL NEW WORK NOTE: (APPLY TO THIS SHEET ONLY)

COORDINATE ROUTING OF NEW DUCTWORK, NEW PIPING, AND LOCATION OF NEW WSHP'S WITH EXISTING ELECTRICAL CONDUIT, SIGNAL CABLING, AND FIRE PROTECTION PIPING TO REMAIN. CONTRACTOR SHALL FIELD VERIFY LOCATION OF EXISTING TO REMAIN EQUIPMENT, PIPING, CONDUIT, ETC.

GRAPHIC SCALE:

1/8" = 1'-0" 5' 0 5' 10' 15'

SYM	DESCRIPTION	DATE	APPR

NAVFAC

COMMONWEALTH OF VIRGINIA
DONALD M. GAY
Lic. No. 16234
PROFESSIONAL ENGINEER
SEAL

MMM DESIGN GROUP
ARCHITECTS • ENGINEERS • PLANNERS
300 EAST MAIN STREET
NORFOLK, VIRGINIA 23510
757-623-1641

TST Turner-Strategic Technologies

APPROVED
FOR COMMANDER NAVFAC
ACTIVITY
SATISFACTORY TO DATE

DES	MTF	DRW	WFC	CHK	DMG

PROJECT MANAGER –
BRANCH MANAGER
CHIEF ENG/ARCH
DATE: MAY 11, 2012

DEPARTMENT OF THE NAVY
NAVAL FACILITIES ENGINEERING COMMAND
HAMPTON ROADS PT
NAVAL FACILITIES ENGINEERING COMMAND ~ MID-ATLANTIC
NORFOLK, VIRGINIA
NAVAL STATION NORFOLK
NORFOLK, VIRGINIA
LF-59 HANGAR BAY FACILITY
PHASE 2 HVAC SECOND FLOOR NEW WORK DUCTWORK PLAN - WEST

SCALE: AS NOTED
EPROJECT NO.: 1038784
CONSTR. CONTR. NO. N40085-11-D-6589 0004-01
NAVFAC DRAWING NO. 12615726
SHEET 50 OF X

M-103

DRAWFORM REVISION: 10 MARCH 2009

REVDATE: FILE NAME: K:\1161200\Working Drawings\Hangar Bay NSN - AutoCAD\Sheets\Construction\M-MECHANICAL\BLDGLF59-1038784-M-103.dwg LAYOUT NAME: M-103 PHASE 2 HVAC SECOND FLOOR NEW WORK DUCTWORK PLAN - WEST PLOTTED: Friday, May 11, 2012 - 12:28pm

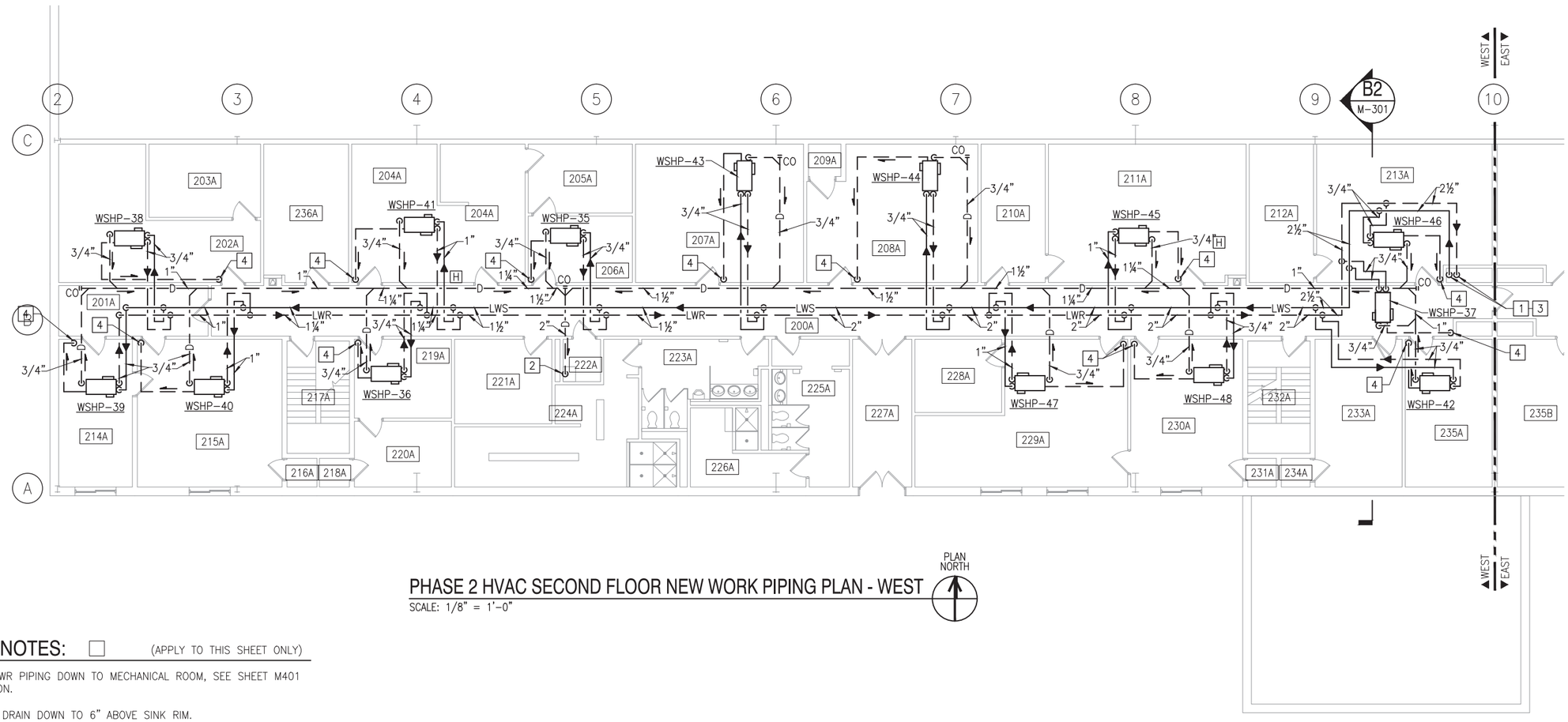

PHASE 2 HVAC SECOND FLOOR NEW WORK PIPING PLAN - WEST

SCALE: 1/8" = 1'-0"

NEW WORK NOTES: ☐ (APPLY TO THIS SHEET ONLY)

1. 2½" LWS AND LWR PIPING DOWN TO MECHANICAL ROOM, SEE SHEET M401 FOR CONTINUATION.
2. 2" CONDENSATE DRAIN DOWN TO 6" ABOVE SINK RIM.
3. PROVIDE MANUAL AIR VALVE.
4. TURN 3/4" EMERGENCY DRIP PAN DRAIN LINE DOWN TO 1½" BELOW CEILING, PROVIDE ESCUTCHEON PLATE.

GENERAL NEW WORK NOTE: (APPLY TO THIS SHEET ONLY)

COORDINATE ROUTING OF NEW DUCTWORK, NEW PIPING, AND LOCATION OF NEW WSHP'S WITH EXISTING ELECTRICAL CONDUIT, SIGNAL CABLING, AND FIRE PROTECTION PIPING TO REMAIN. CONTRACTOR SHALL FIELD VERIFY LOCATION OF EXISTING TO REMAIN EQUIPMENT, PIPING, CONDUIT, ETC.

GRAPHIC SCALE:

1/8" = 1'-0" 5' 0 5' 10' 15'

SYM	DESCRIPTION	DATE	APVD

NAVFAC

COMMONWEALTH OF VIRGINIA
DONALD M. GAY
Lic. No. 16234
PROFESSIONAL ENGINEER
SEAL

MMM DESIGN GROUP
ARCHITECTS•ENGINEERS•PLANNERS
300 EAST MAIN STREET
NORFOLK, VIRGINIA 23510
757-623-1641

TST
Turner-Strategic Technologies

APPROVED
FOR COMMANDER NAVFAC
ACTIVITY
SATISFACTORY TO DATE

DES	DRW	CHK
MTF	WFC	DMG

PROJECT MANAGER –
BRANCH MANAGER
CHIEF ENG/ARCH
DATE: MAY 11, 2012

DEPARTMENT OF THE NAVY
NAVAL FACILITIES ENGINEERING COMMAND
HAMPTON ROADS IPT
NAVAL FACILITIES ENGINEERING COMMAND ~ MID-ATLANTIC
NORFOLK, VIRGINIA
NAVAL STATION NORFOLK
NORFOLK, VIRGINIA
LF-59 HANGAR BAY FACILITY
PHASE 2 HVAC SECOND FLOOR NEW WORK PIPING PLAN – WEST

SCALE: AS NOTED
EPROJECT NO.: 1038784
CONSTR. CONTR. NO. N40085-11-D-6589 0004-01
NAVFAC DRAWING NO. 12615727
SHEET 51 OF X
M-104

DRAWFORM REVISION: 10 MARCH 2009

REVDATE: FILE NAME: K:\1161200\Working Drawings\Hangar Bay NSN - AutoCAD\Sheets\Construction\M-MECHANICAL\BLDGLF59-1038784-M-104.dwg LAYOUT NAME: M-104 PHASE 2 HVAC SECOND FLOOR NEW WORK PIPING PLAN - WEST PLOTTED: Friday, May 11, 2012 - 12:28pm

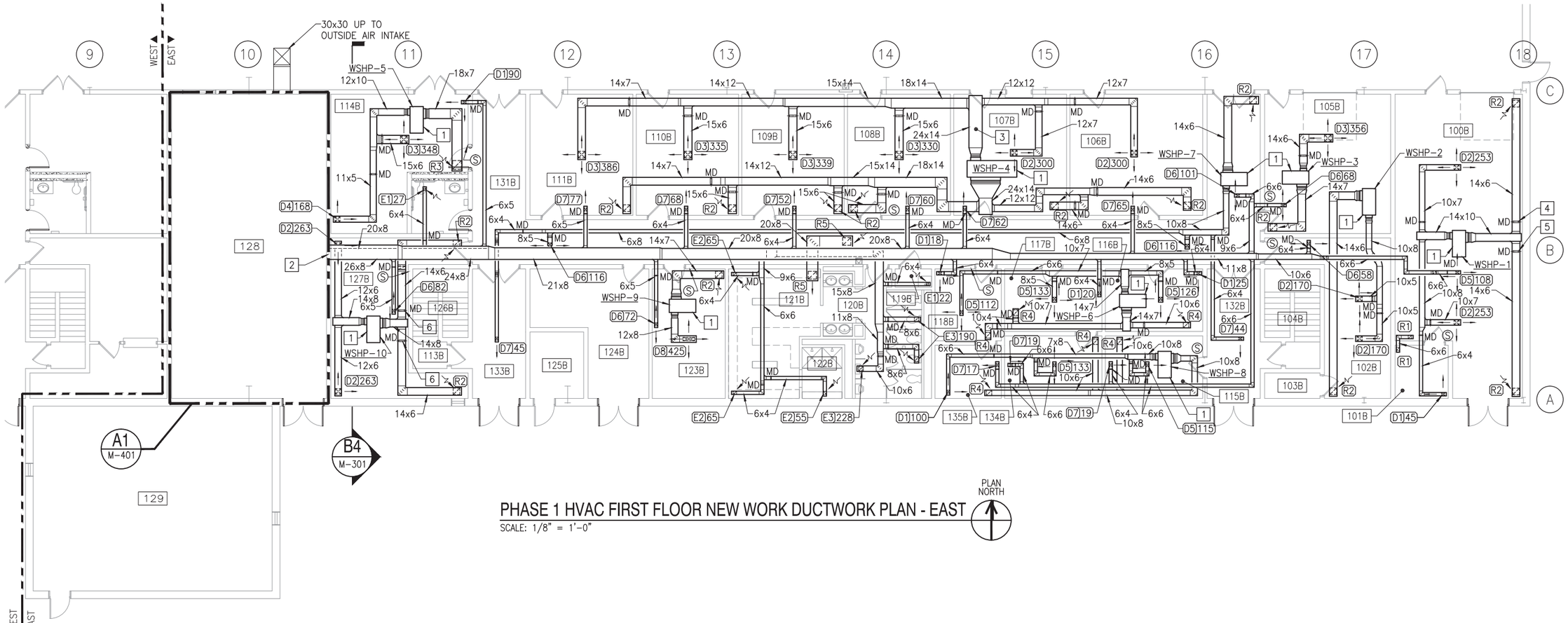

PHASE 1 HVAC FIRST FLOOR NEW WORK DUCTWORK PLAN - EAST

SCALE: 1/8" = 1'-0"

PLAN NORTH

NEW WORK NOTES: ☐ (APPLY TO THIS SHEET ONLY)

1. UNIT HUNG FROM STRUCTURE ABOVE WITH THREADED HANGER RODS, DOUBLE LOCK NUTS, WASHERS AND VIBRATION ISOLATORS.
2. SEE SHEET M401 FOR CONTINUATION.
3. DUCT MOUNTED SMOKE DETECTOR.
4. BALANCED TO 275 CFM.
5. BALANCE TO 276 CFM.
6. BALANCE TO 263 CFM.

GENERAL NEW WORK NOTE: (APPLY TO THIS SHEET ONLY)

COORDINATE ROUTING OF NEW DUCTWORK, NEW PIPING, AND LOCATION OF NEW WSHP'S WITH EXISTING ELECTRICAL CONDUIT, SIGNAL CABLING, AND FIRE PROTECTION PIPING TO REMAIN. CONTRACTOR SHALL FIELD VERIFY LOCATION OF EXISTING TO REMAIN EQUIPMENT, PIPING, CONDUIT, ETC.

GRAPHIC SCALE:

1/8" = 1'-0" 5' 0 5' 10' 15'

SYM	DESCRIPTION	DATE	APVD

NAVFAC

COMMONWEALTH OF VIRGINIA
DONALD M. GAY
Lic. No. 16234
PROFESSIONAL ENGINEER
SEAL

MMM DESIGN GROUP
ARCHITECTS•ENGINEERS•PLANNERS
300 EAST MAIN STREET
NORFOLK, VIRGINIA 23510
757-623-1641

TST Turner-Strategic Technologies

APPROVED

FOR COMMANDER NAVFAC

ACTIVITY

SATISFACTORY TO DATE

DES MTF | DRW WFC | CHK DMG

PROJECT MANAGER –

BRANCH MANAGER

CHIEF ENG/ARCH

DATE: MAY 11, 2012

DEPARTMENT OF THE NAVY
NAVAL FACILITIES ENGINEERING COMMAND
HAMPTON ROADS IPT
NAVAL FACILITIES ENGINEERING COMMAND ~ MID-ATLANTIC
NORFOLK, VIRGINIA
NAVAL STATION NORFOLK
NORFOLK, VIRGINIA
LF-59 HANGAR BAY FACILITY
PHASE 1 HVAC FIRST FLOOR NEW WORK DUCTWORK PLAN - EAST

SCALE: AS NOTED
EPROJECT NO.: 1038784
CONSTR. CONTR. NO. N40085-11-D-6589 0004-01
NAVFAC DRAWING NO. 12615728
SHEET 52 OF X

M-105

DRAWFORM REVISION: 10 MARCH 2009

REV/DATE: FILE NAME: K:\1161200\Working Drawings\Hanger Bay NSN - AutoCAD\Sheets\Construction\M-MECHANICAL\BLDGLF59-1038784-M-105.dwg LAYOUT NAME: M-105 PHASE 1 HVAC FIRST FLOOR NEW WORK DUCTWORK PLAN - EAST PLOTTED: Friday, May 11, 2012 - 12:28pm

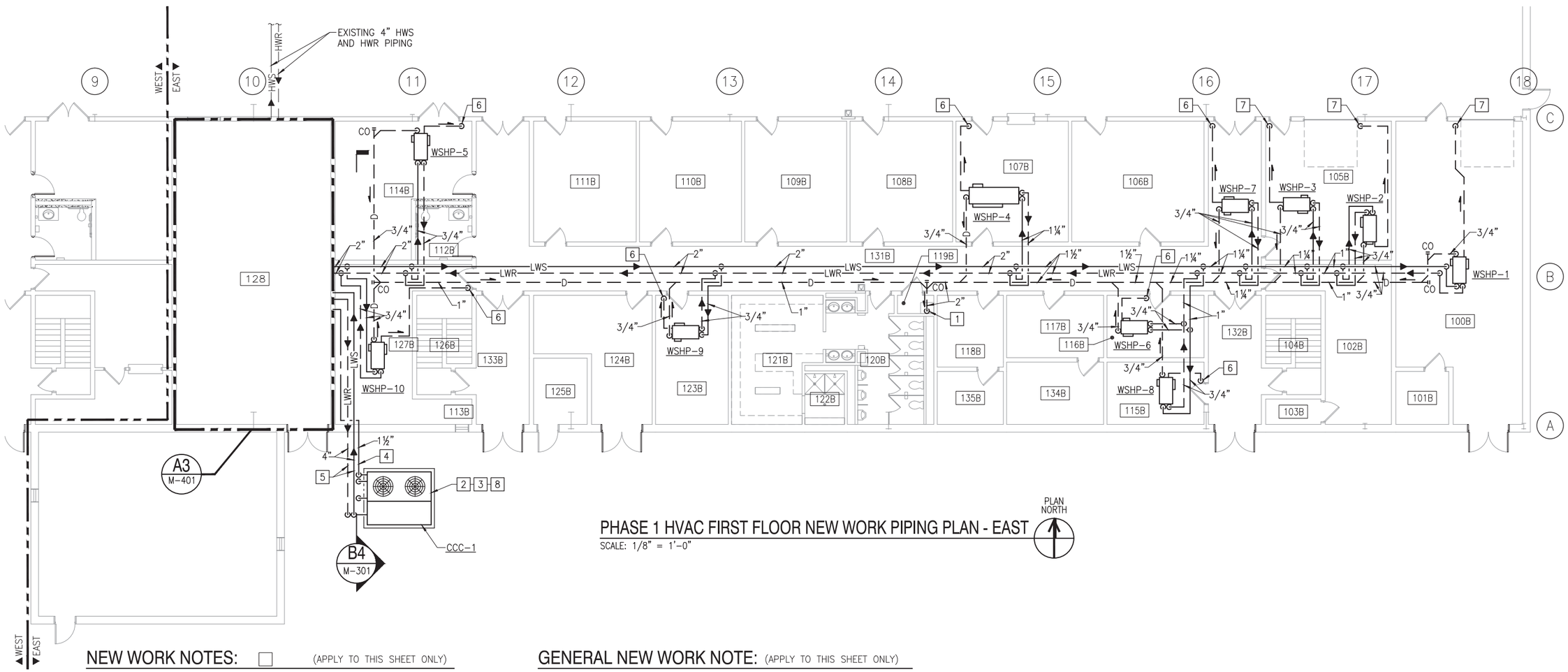

PHASE 1 HVAC FIRST FLOOR NEW WORK PIPING PLAN - EAST

SCALE: 1/8" = 1'-0"

NEW WORK NOTES: ☐ (APPLY TO THIS SHEET ONLY)

1. 2" CONDENSATE DRAIN DOWN TO 6" ABOVE SINK RIM.
2. PROVIDE 12" THICK REINFORCED CONCRETE PAD. REINFORCE WITH #4 REBAR @ 12" ON CENTER EACH WAY. PROVIDE MINIMUM PROTECTIVE COVER FOR REINFORCING STEEL OF 3" CLEAR. PAD SHALL BE A MAXIMUM OF 6" WIDER AND LONGER ON ALL SIDES THAN EQUIPMENT PROVIDED.
3. PROVIDE 4 – W6X25 STEEL BEAMS BETWEEN PAD AND CCC-1. BEAMS SHALL BE FULL LENGTH AND WIDTH OF CCC-1.
4. PROVIDE ELECTRIC HEAT TAPE ON 1½" DOMESTIC MAKEUP WATER PIPING, FROM 18" INSIDE BUILDING TO CCC-1.
5. PROVIDE ELECTRIC HEAT TAPE ON 4" LWS AND 4" LWR PIPING, FROM 18" INSIDE BUILDING TO CCC-1.
6. TURN 3/4" EMERGENCY DRIP PAN DRAIN LINE DOWN TO 1½" BELOW CEILING, PROVIDE ESCUTCHEON PLATE.
7. ELBOW 3/4" EMERGENCY DRIP PAN DRAIN LINE DOWN.
8. ALL VERTICAL FACES, OF CLOSED CIRCUIT COOLER, HAVING OPENINGS 6" AND LARGER SHALL HAVE LOCKED SCREEN PANELS WITH SCREEN PANEL OPENING LESS THAN 6".

GENERAL NEW WORK NOTE: (APPLY TO THIS SHEET ONLY)

COORDINATE ROUTING OF NEW DUCTWORK, NEW PIPING, AND LOCATION OF NEW WSHP'S WITH EXISTING ELECTRICAL CONDUIT, SIGNAL CABLING, AND FIRE PROTECTION PIPING TO REMAIN. CONTRACTOR SHALL FIELD VERIFY LOCATION OF EXISTING TO REMAIN EQUIPMENT, PIPING, CONDUIT, ETC.

GRAPHIC SCALE:

1/8" = 1'-0" 5' 0 5' 10' 15'

SYM	DESCRIPTION	DATE	APVD

NAVFAC

COMMONWEALTH OF VIRGINIA
DONALD M. GAY
Lic. No. 16234
PROFESSIONAL ENGINEER
SEAL

MMM DESIGN GROUP
ARCHITECTS+ENGINEERS+PLANNERS
300 EAST MAIN STREET
NORFOLK, VIRGINIA 23510
757-623-1641

TST Turner-Strategic Technologies

APPROVED
FOR COMMANDER NAVFAC
ACTIVITY
SATISFACTORY TO DATE
DES – DRW – CHK –
PROJECT MANAGER –
BRANCH MANAGER
CHIEF ENG/ARCH
DATE: MAY 11, 2012

DEPARTMENT OF THE NAVY
NAVAL FACILITIES ENGINEERING COMMAND
HAMPTON ROADS IPT
NAVAL FACILITIES ENGINEERING COMMAND – MID-ATLANTIC
NORFOLK, VIRGINIA
NAVAL STATION NORFOLK
NORFOLK, VIRGINIA
LF-59 HANGAR BAY FACILITY
PHASE 1 HVAC FIRST FLOOR NEW WORK PIPING PLAN – EAST

SCALE: AS NOTED
EPROJECT NO.: 1038784
CONSTR. CONTR. NO. N40085-11-D-6589 0004-01
NAVFAC DRAWING NO. 12615729
SHEET 53 OF X

M-106

DRAWFORM REVISION: 10 MARCH 2009

REVDATE: FILE NAME: K:\1161200\Working Drawings\Hanger Bay NSN – AutoCAD\Sheets\Construction\M-MECHANICAL\BLDG2LF59-1038784-M-106.dwg LAYOUT NAME: M-106 PHASE 1 HVAC FIRST FLOOR NEW WORK PIPING PLAN – EAST PLOTTED: Friday, May 11, 2012 – 12:28pm

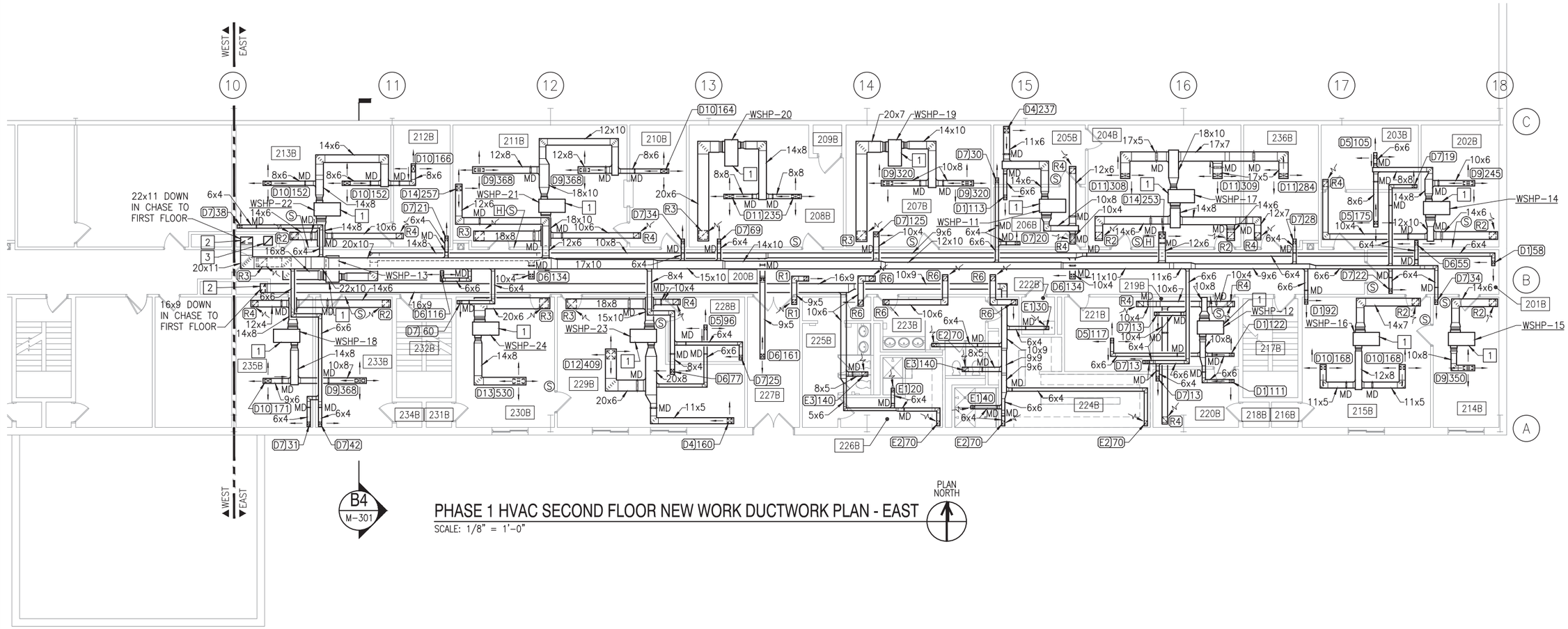

PHASE 1 HVAC SECOND FLOOR NEW WORK DUCTWORK PLAN - EAST

SCALE: 1/8" = 1'-0"

PLAN NORTH

NEW WORK NOTES: ☐ (APPLY TO THIS SHEET ONLY)

1. UNIT HUNG FROM STRUCTURE ABOVE WITH THREADED HANGER RODS, DOUBLE LOCK NUTS, WASHERS AND VIBRATION ISOLATORS.
2. FOR CONTINUATION SEE SHEET M402.
3. 16x16 UP THROUGH ROOF TO RELIEF VENT.

GENERAL NEW WORK NOTE: (APPLY TO THIS SHEET ONLY)

COORDINATE ROUTING OF NEW DUCTWORK, NEW PIPING, AND LOCATION OF NEW WSHP'S WITH EXISTING ELECTRICAL CONDUIT, SIGNAL CABLING, AND FIRE PROTECTION PIPING TO REMAIN. CONTRACTOR SHALL FIELD VERIFY LOCATION OF EXISTING TO REMAIN EQUIPMENT, PIPING, CONDUIT, ETC.

GRAPHIC SCALE:

1/8" = 1'-0" 5' 0 5' 10' 15'

SYM	DESCRIPTION	DATE	APVD

NAVFAC

COMMONWEALTH OF VIRGINIA
DONALD M. GAY
Lic. No. 16234
PROFESSIONAL ENGINEER
SEAL

MMM DESIGN GROUP
ARCHITECTS•ENGINEERS•PLANNERS
300 EAST MAIN STREET
NORFOLK, VIRGINIA 23510
757-623-1641

TST Turner-Strategic Technologies

APPROVED
FOR COMMANDER NAVFAC
ACTIVITY
SATISFACTORY TO DATE

DES	DRW	CHK
MTF	WFC	DMG

PROJECT MANAGER –
BRANCH MANAGER
CHIEF ENG/ARCH
DATE: MAY 11, 2012

DEPARTMENT OF THE NAVY
NAVAL FACILITIES ENGINEERING COMMAND
HAMPTON ROADS IPT
NAVAL FACILITIES ENGINEERING COMMAND ~ MID-ATLANTIC
NORFOLK, VIRGINIA
NAVAL STATION NORFOLK
NORFOLK, VIRGINIA
LF-59 HANGAR BAY FACILITY
PHASE 1 HVAC SECOND FLOOR NEW WORK DUCTWORK PLAN - EAST

SCALE: AS NOTED
EPROJECT NO.: 1038784
CONSTR. CONTR. NO. N40085-11-D-6589 0004-01
NAVFAC DRAWING NO. 12615730
SHEET 54 OF X

M-107

DRAWFORM REVISION: 10 MARCH 2009

REVDATE: FILE NAME: K:\1161200\Working Drawings\Hangar Bay NSN - AutoCAD\Sheets\Construction\M-MECHANICAL\BLDGLF59-1038784-M-107.dwg LAYOUT NAME: M-107 PHASE 1 HVAC SECOND FLOOR NEW WORK DUCTWORK PLAN - EAST PLOTTED: Friday, May 11, 2012 - 12:28pm

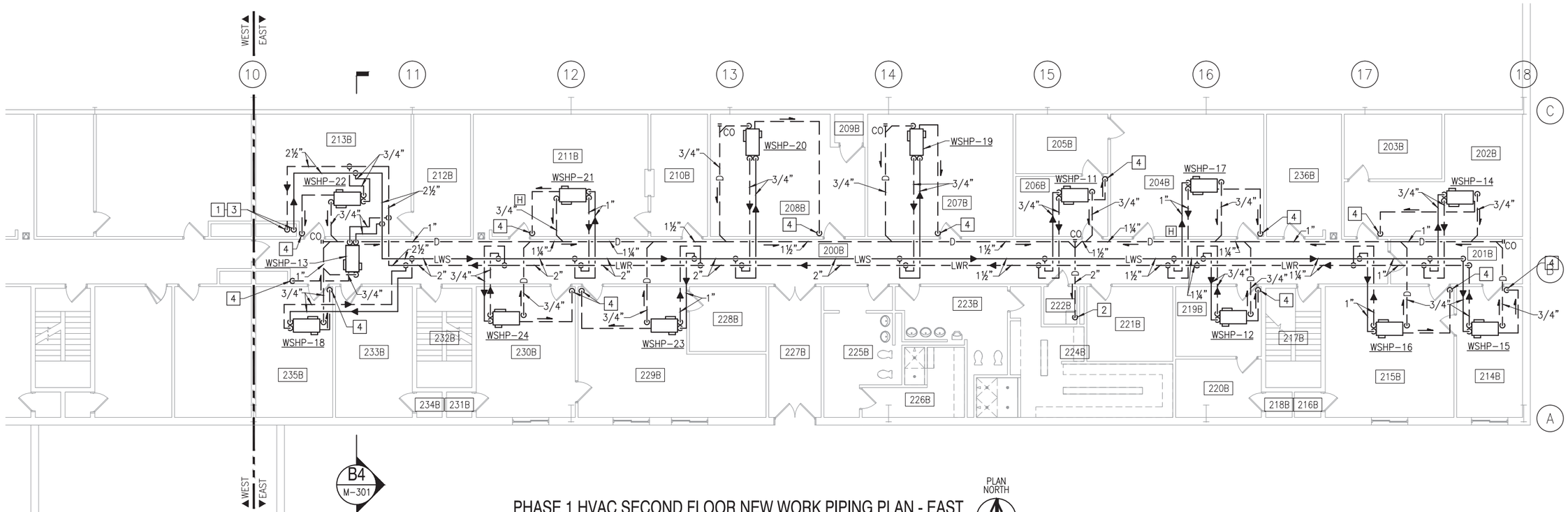

PHASE 1 HVAC SECOND FLOOR NEW WORK PIPING PLAN - EAST

SCALE: 1/8" = 1'-0"

PLAN NORTH

NEW WORK NOTES: ☐ (APPLY TO THIS SHEET ONLY)

1. 2½" LWS AND LWR PIPING DOWN TO MECHANICAL ROOM, SEE SHEET M401 FOR CONTINUATION.
2. 2" CONDENSATE DRAIN DOWN TO 6" ABOVE SINK RIM.
3. PROVIDE MANUAL AIR VENT.
4. TURN 3/4" EMERGENCY DRIP PAN DRAIN LINE TO 1½" DOWN BELOW CEILING, PROVIDE ESCUTCHEON PLATE.

GENERAL NEW WORK NOTE: (APPLY TO THIS SHEET ONLY)

COORDINATE ROUTING OF NEW DUCTWORK, NEW PIPING, AND LOCATION OF NEW WSHP'S WITH EXISTING ELECTRICAL CONDUIT, SIGNAL CABLING, AND FIRE PROTECTION PIPING TO REMAIN. CONTRACTOR SHALL FIELD VERIFY LOCATION OF EXISTING TO REMAIN EQUIPMENT, PIPING, CONDUIT, ETC.

GRAPHIC SCALE:

1/8" = 1'-0" 5' 0 5' 10' 15'

SYM	DESCRIPTION	DATE	APVD

NAVFAC

COMMONWEALTH OF VIRGINIA
DONALD M. GAY
Lic. No. 16234
PROFESSIONAL ENGINEER
SEAL

MMM DESIGN GROUP
ARCHITECTS•ENGINEERS•PLANNERS
300 EAST MAIN STREET
NORFOLK, VIRGINIA 23510
757-623-1641

TST
Turner-Strategic Technologies

APPROVED
FOR COMMANDER NAVFAC
ACTIVITY
SATISFACTORY TO DATE

DES	DRW	CHK
MTF	WFC	DMG

PROJECT MANAGER –
BRANCH MANAGER
CHIEF ENG/ARCH
DATE: MAY 11, 2012

DEPARTMENT OF THE NAVY
NAVAL FACILITIES ENGINEERING COMMAND
HAMPTON ROADS PT
NAVAL FACILITIES ENGINEERING COMMAND ~ MID-ATLANTIC
NORFOLK, VIRGINIA
NAVAL STATION NORFOLK
NORFOLK, VIRGINIA
LF-59 HANGAR BAY FACILITY
PHASE 1 HVAC SECOND FLOOR NEW WORK PIPING PLAN – EAST

SCALE: AS NOTED
EPROJECT NO.: 1038784
CONSTR. CONTR. NO. N40085-11-D-6589 0004-01
NAVFAC DRAWING NO. 12615731
SHEET 55 OF X

M-108

DRAWFORM REVISION: 10 MARCH 2009

REVDATE: FILE NAME: K:\1161200\Working Drawings\Hangar Bay NSN – AutoCAD\Sheets\Construction\M-MECHANICAL\BLDGLF59-1038784-M-108.dwg LAYOUT NAME: M-108 PHASE 1 HVAC SECOND FLOOR NEW WORK PIPING PLAN – EAST PLOTTED: Friday, May 11, 2012 – 12:28pm

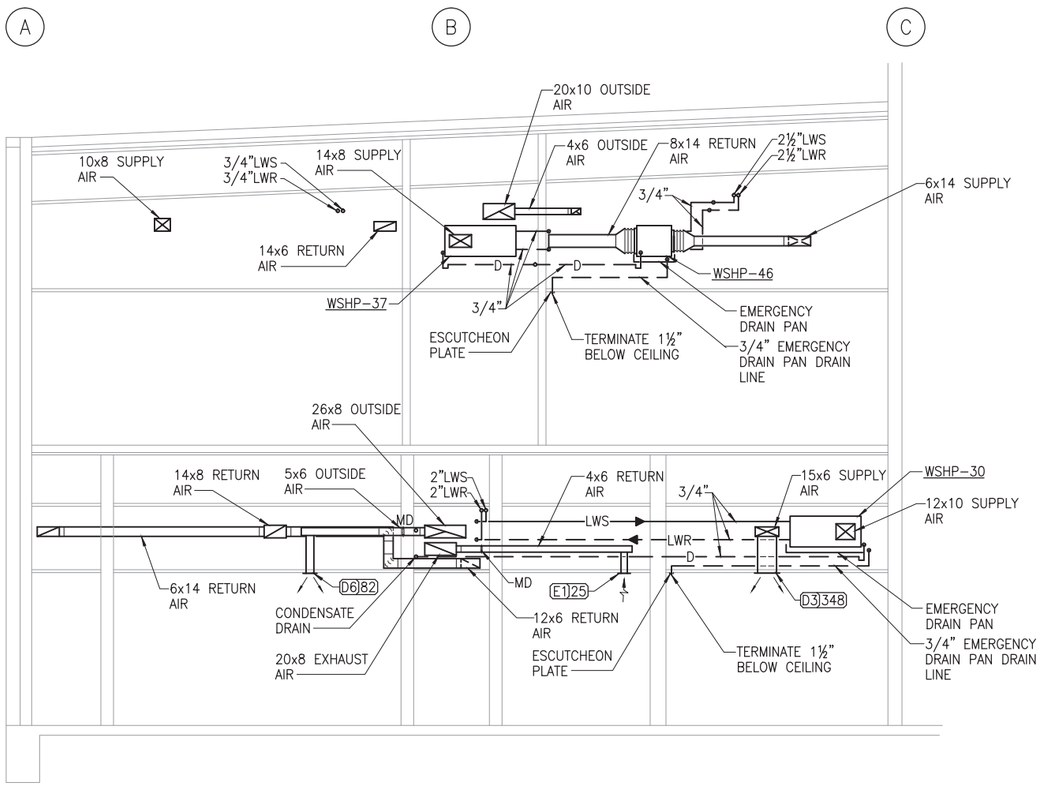

PHASE 2 SECTION THRU WEST WING (B2)

SCALE: 1/4" = 1'-0"

M-101
M-102
M-103
M-104

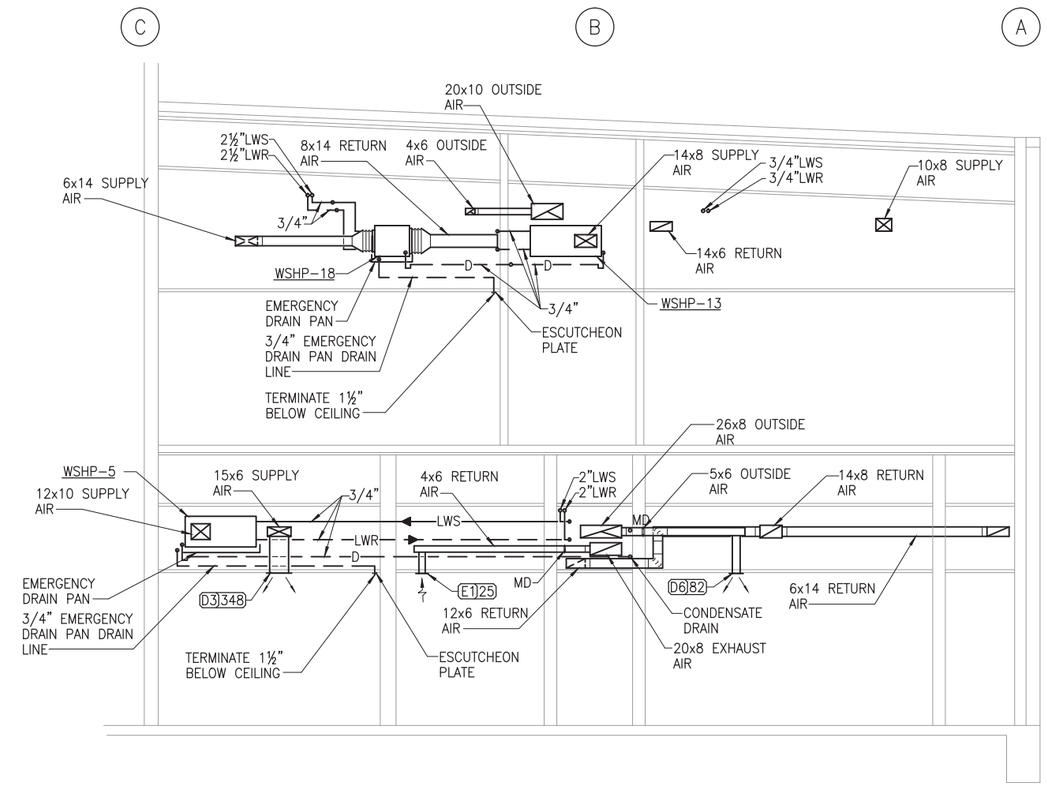

PHASE 1 SECTION THRU EAST WING (B4)

SCALE: 1/4" = 1'-0"

M-105
M-106
M-107
M-108

GRAPHIC SCALE:

1/4" = 1'-0" 5' 0 5'

REV	DATE	DESCRIPTION	BY

NAVFAC

COMMONWEALTH OF VIRGINIA
DONALD M. GAY
Lic. No. 16234
PROFESSIONAL ENGINEER
SEAL

MMM DESIGN GROUP
ARCHITECTS+ENGINEERS+PLANNERS
300 EAST MAIN STREET
NORFOLK, VIRGINIA 23510
757-623-1641

TST Turner-Strategic Technologies

APPROVED

FOR COMMANDER NAVFAC

ACTIVITY

SATISFACTORY TO DATE

DES	MTF	DRW	WFC	CHK	DMG

PROJECT MANAGER –

BRANCH MANAGER

CHIEF ENG/ARCH

DATE: MAY 11, 2012

DEPARTMENT OF THE NAVY
NAVAL FACILITIES ENGINEERING COMMAND
HAMPTON ROADS IPT
NAVAL FACILITIES ENGINEERING COMMAND ~ MID-ATLANTIC
NORFOLK, VIRGINIA
NAVAL STATION NORFOLK
NORFOLK, VIRGINIA

LF-59 HANGAR BAY FACILITY

HVAC SECTIONS

SCALE: AS NOTED
EPROJECT NO.: 1038784
CONSTR. CONTR. NO. N40085-11-D-6589 0004-01
NAVFAC DRAWING NO. 12615732
SHEET 56 OF X

M-301

DRAWFORM REVISION: 10 MARCH 2009

REV/DATE: FILE NAME: K:\1161200\Working Drawings\Hangar Bay NSN - AutoCAD\Sheets\Construction\M-MECHANICAL\BLDGLF59-1038784-M-301.dwg LAYOUT NAME: M-301 HVAC SECTIONS PLOTTED: Friday, May 11, 2012 - 12:28pm

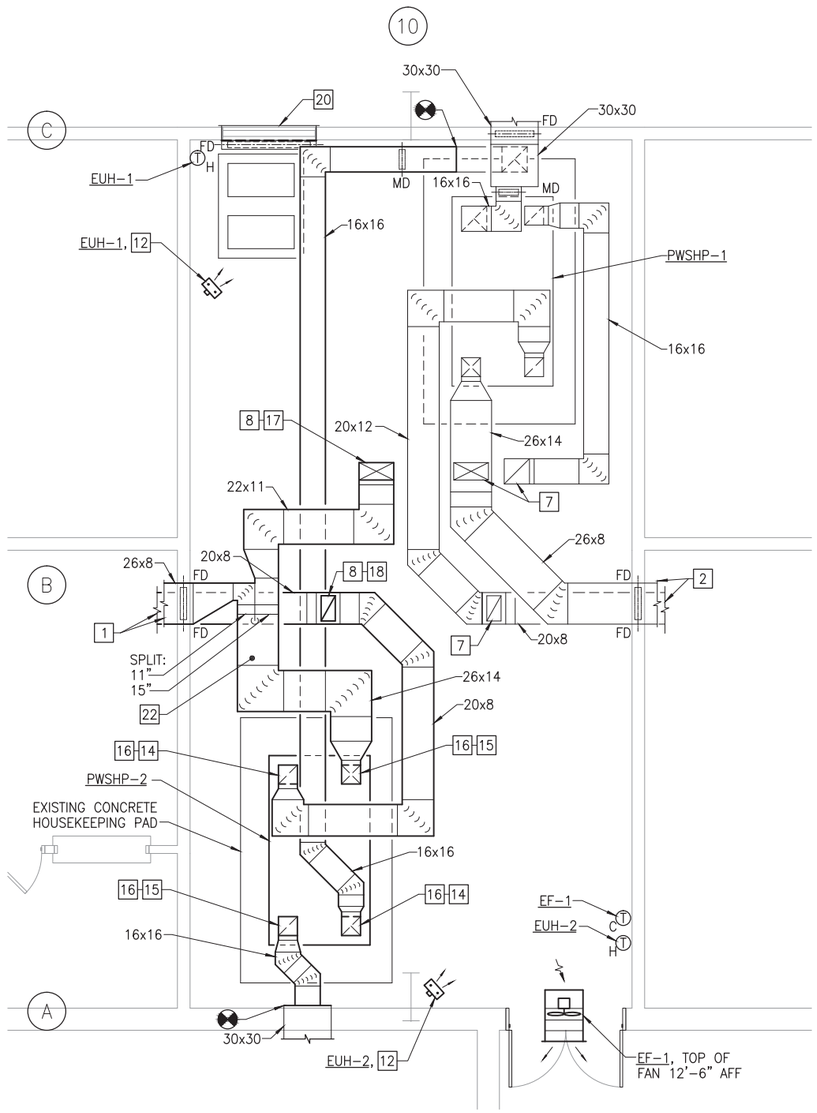

PHASE 2 HVAC MECHANICAL ROOM ENLARGED NEW WORK DUCTWORK PLAN

SCALE: 1/4" = 1'-0"

M-105 A1

PLAN NORTH

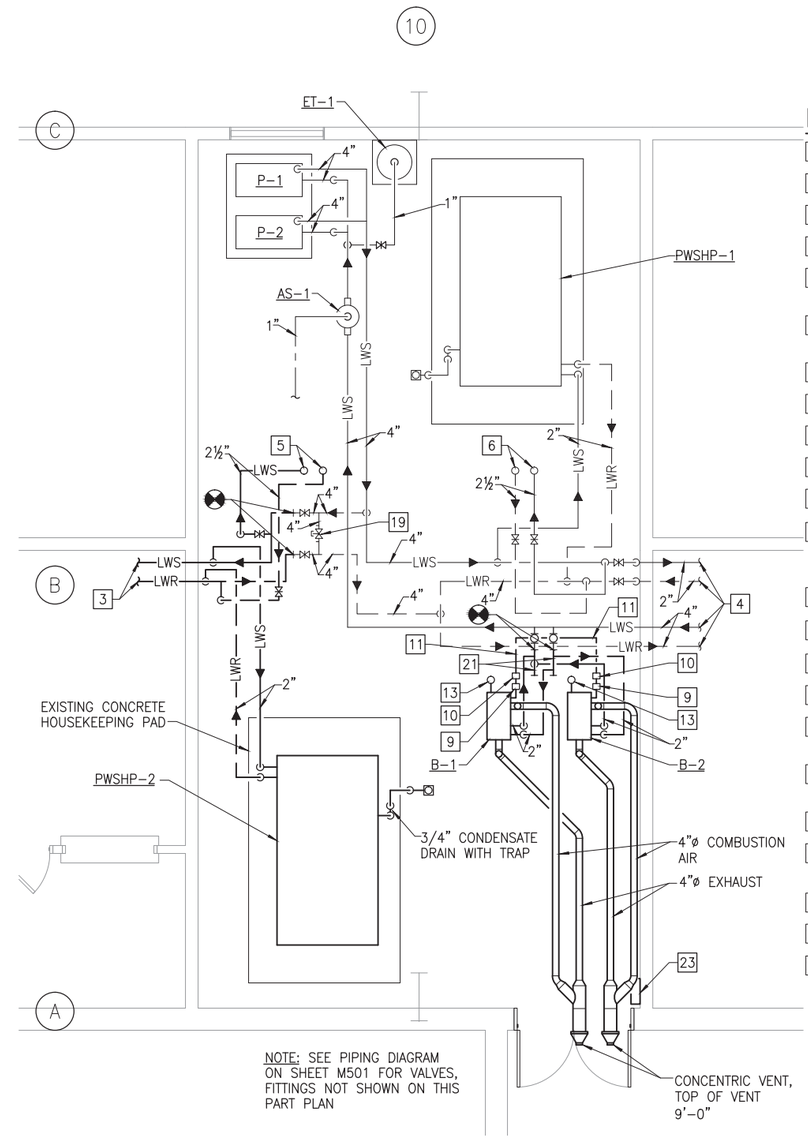

PHASE 2 HVAC MECHANICAL ROOM ENLARGED NEW WORK PIPING PLAN

SCALE: 1/4" = 1'-0"

M-106 A3

PLAN NORTH

NEW WORK NOTES: ☐ (APPLY TO THIS SHEET ONLY)

1. FOR CONTINUATION SEE SHEET M101.
2. FOR CONTINUATION SEE SHEET M105.
3. FOR CONTINUATION SEE SHEET M102.
4. FOR CONTINUATION SEE SHEET M106.
5. LWS AND LWR PIPING UP TO SECOND FLOOR. FOR CONTINUATION SEE SHEET M104.
6. LWS AND LWR PIPING UP TO SECOND FLOOR. FOR CONTINUATION SEE SHEET M108.
7. FOR CONTINUATION SEE SHEET M107.
8. FOR CONTINUATION SEE SHEET M103.
9. CONDENSATE TRAP.
10. NEUTRALIZATION TANK.
11. ROUTE TO FLOOR DRAIN.
12. BOTTOM OF UNIT 8'-0" AFF. UNIT HUNG FROM STRUCTURE ABOVE WITH THREADED HANGER RODS, DOUBLE LOCKNUTS, WASHERS, AND VIBRATION ISOLATORS.
13. 1" GAS UP. SEE SHEET P401 FOR CONTINUATION.
14. TRANSITION TO FULL SIZE OF UNIT'S INLET.
15. TRANSITION TO FULL SIZE OF UNIT'S OUTLET.
16. PROVIDE FLEXIBLE CONNECTION.
17. 22x11 UP IN CHASE TO SECOND FLOOR. PROVIDE FIRE DAMPER AT SECOND FLOOR PENETRATION.
18. 16x9 UP IN CHASE TO SECOND FLOOR. PROVIDE FIRE DAMPER AT SECOND FLOOR PENETRATION.
19. CLOSE VALVE.
20. RE-INSTALL EXISTING LOUVER AND FIRE DAMPER HELD FOR RE-USE. CONTRACTOR SHALL VERIFY PROPER OPERATION OF FIRE DAMPER.
21. 2½" HWS AND HWR HEADERS.
22. DUCT MOUNTED SMOKE DETECTOR.
23. DDC PANEL.

GRAPHIC SCALE:

1/4" = 1'-0" 5' 0 5'

SYM	DESCRIPTION	DATE	APVD

NAVFAC

COMMONWEALTH OF VIRGINIA
DONALD M. GAY
Lic. No. 16234
PROFESSIONAL ENGINEER
SEAL

MMM DESIGN GROUP
ARCHITECTS•ENGINEERS•PLANNERS
300 EAST MAIN STREET
NORFOLK, VIRGINIA 23510
757-623-1641

TST Turner-Strategic Technologies

APPROVED
FOR COMMANDER NAVFAC
ACTIVITY
SATISFACTORY TO DATE

DES	MTF	DRW	WFC	CHK	DMG

PROJECT MANAGER –
BRANCH MANAGER
CHIEF ENG/ARCH
DATE: MAY 11, 2012

DEPARTMENT OF THE NAVY
NAVAL FACILITIES ENGINEERING COMMAND
HAMPTON ROADS IPT
NAVAL FACILITIES ENGINEERING COMMAND ~ MID-ATLANTIC
NORFOLK, VIRGINIA
NAVAL STATION NORFOLK
NORFOLK, VIRGINIA
LF-59 HANGAR BAY FACILITY
PHASE 2 HVAC MECHANICAL ROOM ENLARGED NEW WORK PLANS

SCALE: AS NOTED
EPROJECT NO.: 1038784
CONSTR. CONTR. NO. N40085-11-D-6589 0004-01
NAVFAC DRAWING NO. 12615733
SHEET 57 OF X

M-401

DRAWFORM REVISION: 10 MARCH 2009

REV/DATE: FILE NAME: K:\1161200\Working Drawings\Hanger Bay, NSN - AutoCAD\Sheets\Construction\M-MECHANICAL\BLDGLF59-1038784-M-401.dwg LAYOUT NAME: M-401 PHASE 2 HVAC MECHANICAL ROOM ENLARGED NEW WORK PLANS PLOTTED: Friday, May 11, 2012 - 12:29pm

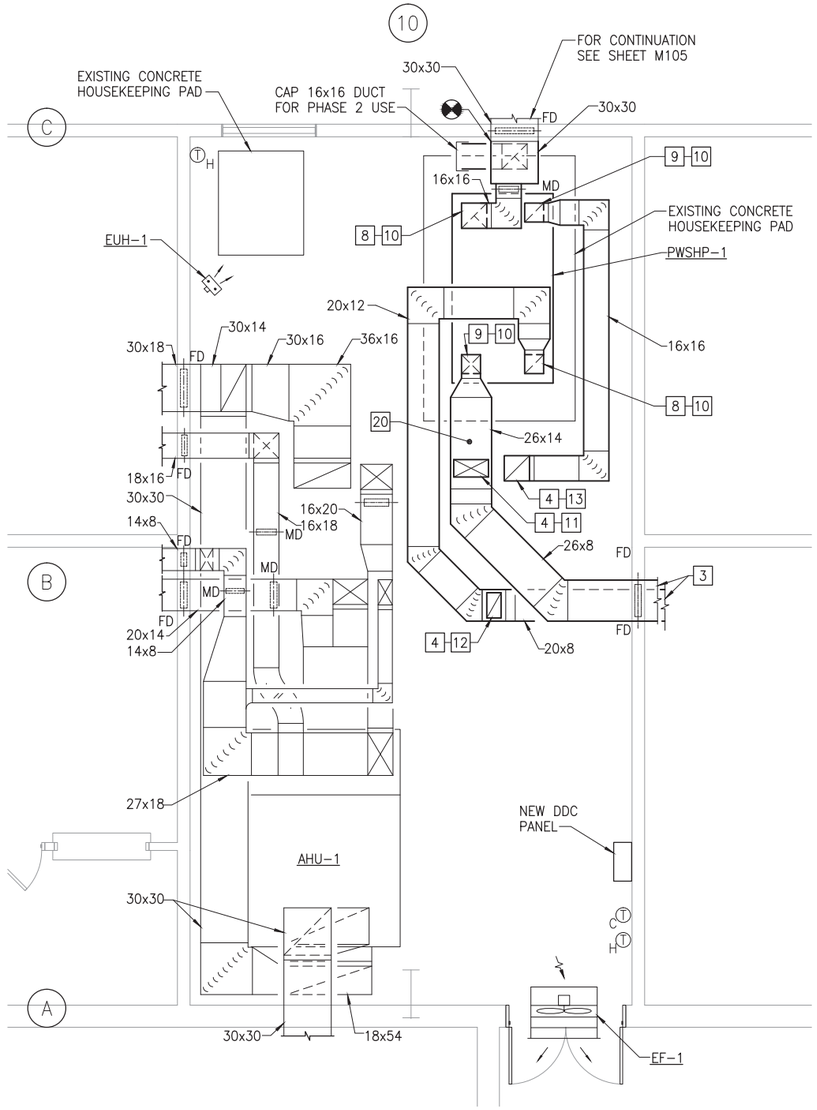

PHASE 1 HVAC MECHANICAL ROOM ENLARGED NEW WORK DUCTWORK PLAN

SCALE: 1/4" = 1'-0"

M-105 A1

PLAN NORTH

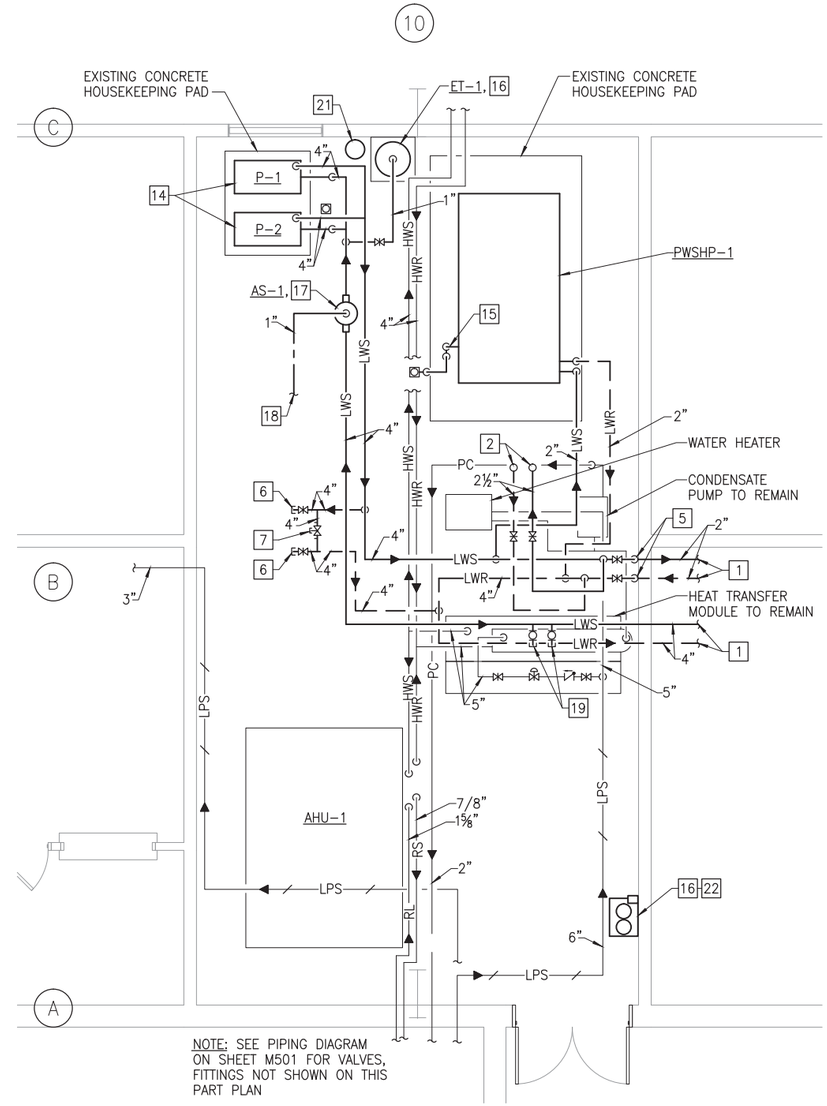

PHASE 1 HVAC MECHANICAL ROOM ENLARGED NEW WORK PIPING PLAN

SCALE: 1/4" = 1'-0"

M-106 A3

PLAN NORTH

NEW WORK NOTES: ☐ (APPLY TO THIS SHEET ONLY)

1. FOR CONTINUATION SEE SHEET M106.
2. FOR CONTINUATION SEE SHEET M108.
3. FOR CONTINUATION SEE SHEET M105.
4. FOR CONTINUATION SEE SHEET M107.
5. PROVIDE AAV.
6. SHUTOFF VALVES FOR PHASE 2 USE.
7. SET AT 109 GPM.
8. TRANSITION TO FULL SIZE OF UNIT'S INLET.
9. TRANSITION TO FULL SIZE OF UNIT'S OUTLET.
10. PROVIDE FLEXIBLE DUCT CONNECTION.
11. 22x11 UP IN CHASE TO SECOND FLOOR. PROVIDE FIRE DAMPER AT SECOND FLOOR PENETRATION.
12. 16x9 UP IN CHASE TO SECOND FLOOR. PROVIDE FIRE DAMPER AT SECOND FLOOR PENETRATION.
13. 16x16 UP IN CHASE TO SECOND FLOOR.
14. PROVIDE VIBRATION ISOLATORS BETWEEN PUMP BASE AND EXISTING CONCRETE PAD.
15. 3/4" CONDENSATE DRAIN WITH TRAP ROUTED TO FLOOR DRAIN.
16. PROVIDE A 4" HIGH CONCRETE HOUSEKEEPING PAD. PAD SHALL BE 6" WIDER AND LONGER THAN EQUIPMENT PROVIDED.
17. UNIT HUNG FROM STRUCTURE ABOVE WITH THREADED HANGER RODS. PROVIDE MISCELLANEOUS STRUCTURAL STEEL AS REQUIRED.
18. FOR CONTINUATION SEE SHEET P401.
19. VALVE AND CAP 2½" HWS AND HWR PIPING FOR CONNECTION IN PHASE 2.
20. DUCT MOUNTED SMOKE DETECTOR.
21. CHEMICAL SHOT FEEDER.
22. CLOSED CIRCUIT COOLER CHEMICAL FEED EQUIPMENT.

GRAPHIC SCALE:

1/4" = 1'-0" 5' 0 5'

SYM	DESCRIPTION	DATE	APVR

NAVFAC

COMMONWEALTH OF VIRGINIA
DONALD M. GAY
Lic. No. 16234
PROFESSIONAL ENGINEER
SEAL

MMM DESIGN GROUP
ARCHITECTS • ENGINEERS • PLANNERS
300 EAST MAIN STREET
NORFOLK, VIRGINIA 23510
757-623-1641

TST Turner-Strategic Technologies

APPROVED

FOR COMMANDER NAVFAC

ACTIVITY

SATISFACTORY TO DATE

DES MTF | DRW WFC | CHK DMG

PROJECT MANAGER –

BRANCH MANAGER

CHIEF ENG/ARCH

DATE: MAY 11, 2012

DEPARTMENT OF THE NAVY
NAVAL FACILITIES ENGINEERING COMMAND
HAMPTON ROADS IPT
NAVAL FACILITIES ENGINEERING COMMAND ~ MID-ATLANTIC
NORFOLK, VIRGINIA
NAVAL STATION NORFOLK
NORFOLK, VIRGINIA

LF-59 HANGAR BAY FACILITY

PHASE 1 HVAC MECHANICAL ROOM ENLARGED NEW WORK PLANS

SCALE: AS NOTED
EPROJECT NO.: 1038784
CONSTR. CONTR. NO. N40085-11-D-6589 0004-01
NAVFAC DRAWING NO. 12615734
SHEET 58 OF X

M-402

DRAWFORM REVISION: 10 MARCH 2009

REVDATE: FILE NAME: K:\1161200\Working Drawings\Hanger Bay NSN - AutoCAD\Sheets\Construction\M-MECHANICAL\BLDGLF59-1038784-M-402.dwg LAYOUT NAME: M-402 PHASE 1 HVAC MECHANICAL ROOM ENLARGED NEW WORK PLANS PLOTTED: Friday, May 11, 2012 - 12:29pm

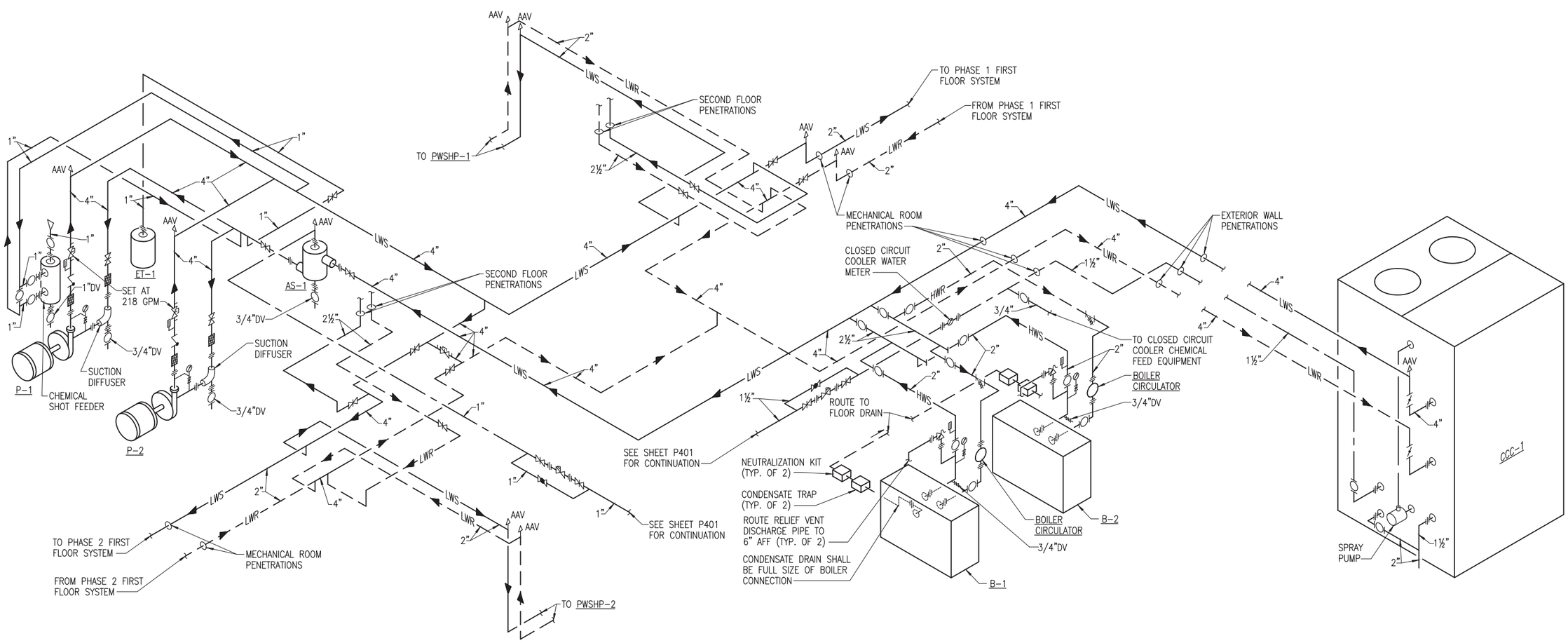

MECHANICAL ROOM PIPING DIAGRAM

NOT TO SCALE

SYM	DESCRIPTION	DATE	APVD

NAVFAC

COMMONWEALTH OF VIRGINIA
DONALD M. GAY
Lic. No. 16234
PROFESSIONAL ENGINEER
SEAL

MMM DESIGN GROUP
ARCHITECTS•ENGINEERS•PLANNERS
300 EAST MAIN STREET
NORFOLK, VIRGINIA 23510
757-623-1641

TST
Turner-Strategic Technologies

APPROVED

FOR COMMANDER NAVFAC

ACTIVITY

SATISFACTORY TO DATE

DES	MTF	DRW	WFC	CHK	DMG

PROJECT MANAGER –
BRANCH MANAGER
CHIEF ENG/ARCH
DATE: MAY 11, 2012

DEPARTMENT OF THE NAVY
NAVAL FACILITIES ENGINEERING COMMAND
HAMPTON ROADS IPT
NAVAL FACILTIES ENGINEERING COMMAND – MID-ATLANTIC
NORFOLK, VIRGINIA
NAVAL STATION NORFOLK
NORFOLK, VIRGINIA

LF-59 HANGAR BAY FACILITY

HVAC PIPING DIAGRAM

SCALE: AS NOTED
EPROJECT NO.: 1038784
CONSTR. CONTR. NO. N40085-11-D-6589 0004-01
NAVFAC DRAWING NO. 12615735
SHEET 59 OF X

M-501

DRAWFORM REVISION: 10 MARCH 2009

REVDATE: FILE NAME: K:\1161200\Working Drawings\Hangar Bay NSN – AutoCAD\Sheets\Construction\M-MECHANICAL\M-501.dwg LAYOUT NAME: M-501 HVAC PIPING DIAGRAM PLOTTED: Friday, May 11, 2012 – 12:29pm

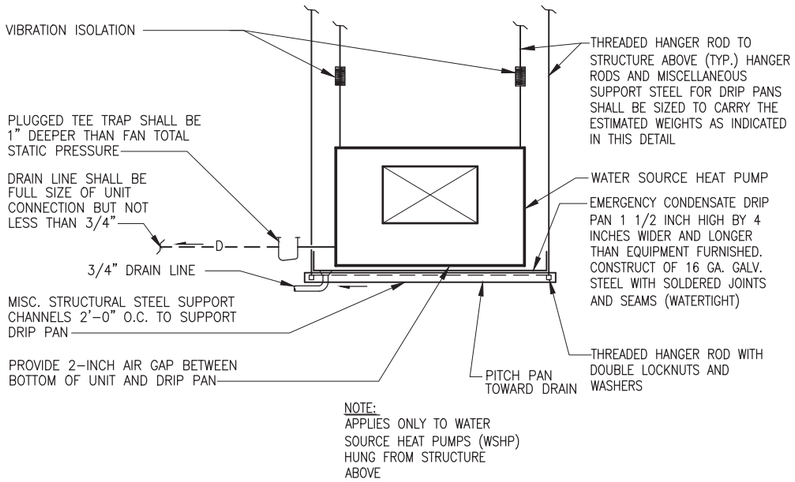

EMERGENCY CONDENSATE DRIP PAN DETAIL

NOT TO SCALE

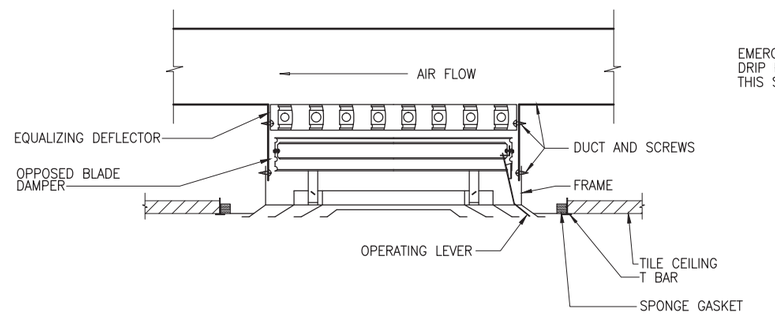

SQUARE OR RECTANGULAR CEILING SUPPLY AIR DIFFUSER

NOT TO SCALE

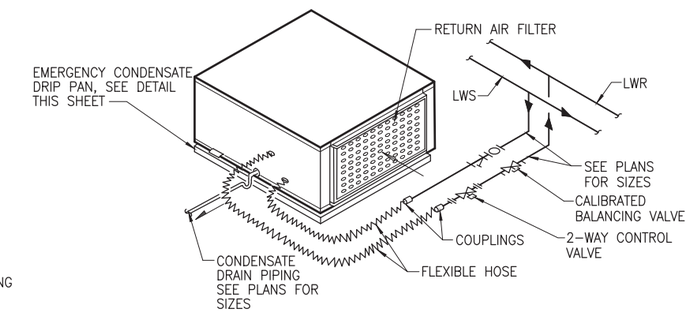

HORIZONTAL WATER TO AIR HEAT PUMP PIPING DIAGRAM

NOT TO SCALE

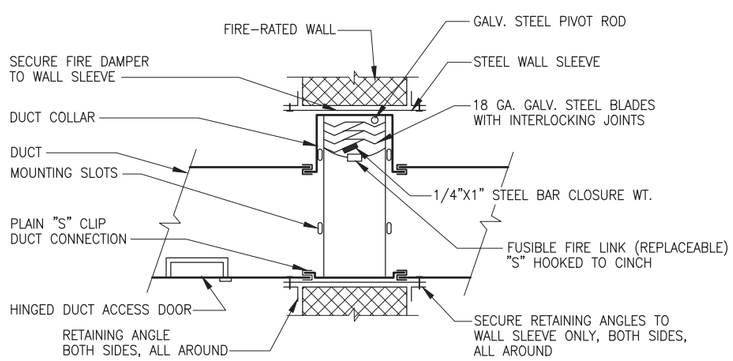

FIRE DAMPER DETAIL

NOT TO SCALE

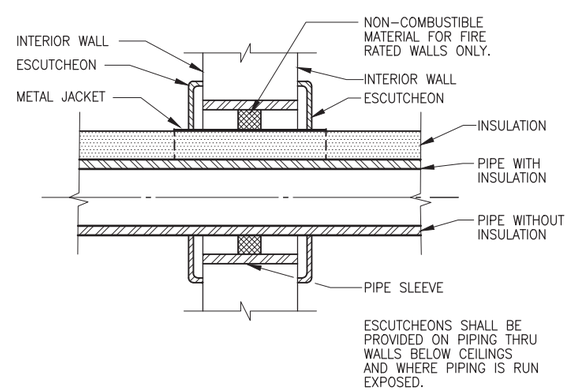

PIPE THRU INTERIOR WALL ABOVE GRADE

NOT TO SCALE

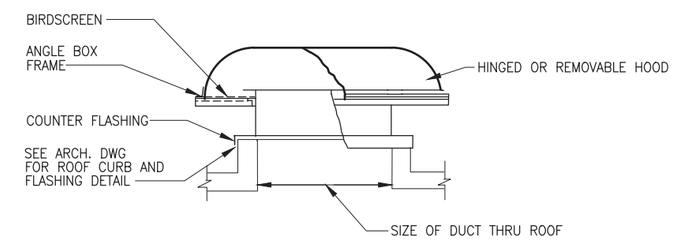

RELIEF AIR VENTILATOR

NOT TO SCALE

NO.	DESCRIPTION	DATE	APVD

NAVFAC

COMMONWEALTH OF VIRGINIA
DONALD M. GAY
Lic. No. 16234
PROFESSIONAL ENGINEER
SEAL

MMM DESIGN GROUP
ARCHITECTS•ENGINEERS•PLANNERS
300 EAST MAIN STREET
NORFOLK, VIRGINIA 23510
757-623-1641

TST
Turner-Strategic Technologies

APPROVED
FOR COMMANDER NAVFAC
ACTIVITY
SATISFACTORY TO DATE

DES	MTF	DRW	WFC	CHK	DMG

PROJECT MANAGER –
BRANCH MANAGER
CHIEF ENG/ARCH
DATE: MAY 11, 2012

DEPARTMENT OF THE NAVY
NAVAL FACILITIES ENGINEERING COMMAND
HAMPTON ROADS IPT
NAVAL FACILITIES ENGINEERING COMMAND ~ MID-ATLANTIC
NORFOLK, VIRGINIA
NAVAL STATION NORFOLK
NORFOLK, VIRGINIA
LF-59 HANGAR BAY FACILITY
HVAC DETAILS

SCALE: AS NOTED
EPROJECT NO.: 1038784
CONSTR. CONTR. NO. N40085-11-D-6589 0004-01
NAVFAC DRAWING NO. 12615736
SHEET 60 OF X
M-502

DRAWFORM REVISION: 10 MARCH 2009

REVDATE: FILE NAME: K:\1161200\Working Drawings\Hangar Bay NSN - AutoCAD\Sheets\Construction\M-MECHANICAL\BLDGLF59-1038784-M-502.dwg LAYOUT NAME: M-502 HVAC DETAILS PLOTTED: Friday, May 11, 2012 - 12:29pm

WATER TO AIR HEAT PUMP SCHEDULE

UNIT NO.	TYPE	FAN ②				COOLING							HEATING ①				LEED INFORMATION		BASIS OF DESIGN
		CFM SA	SPEED	E.S.P. (IN. H_2O)	HP MIN.	SENSIBLE BTUH (MIN.)	TOTAL BTUH (MIN.)	GPM	E.W.T. (°F)	WATER ΔP (FT. H_2O)	E.A.T. (°FDB/°FWB)	INPUT KW	MIN. CAPACITY (BTUH)	E.W.T. (°F)	E.A.T. (°FDB)	INPUT KW	EER@ARI	COP@ARI	
WSHP-1	HORIZ.	550	HIGH	0.31	1/3	12,600	14,700	3.0	86	4.0	75.5/63.2	1.20	7,000	68	70	1.30	14.8 ④	5.4 ④	⑤
WSHP-2	HORIZ.	340	LOW	0.27	1/10	5,600	6,300	1.5	86	2.2	75.3/62.9	0.60	3,200	68	70	0.63	14.8 ④	5.0 ④	⑥
WSHP-3	HORIZ.	356	MED	0.22	1/10	7,700	8,800	3.0	86	3.3	75.4/62.9	0.84	1,400	68	70	0.97	13.2 ④	4.8 ④	⑦
WSHP-4	HORIZ.	1,970	HIGH	0.45	1.0	39,600	44,800	9.0	86	3.5	75.4/62.8	3.80	7,000	68	70	3.70	14.4 ③	5.3 ③	⑧
WSHP-5	HORIZ.	516	HIGH	0.27	1/3	11,100	12,000	3.0	86	3.1	75.6/62.6	0.91	3,000	68	70	0.92	15.5 ④	5.2 ④	⑨
WSHP-6	HORIZ.	370	HIGH	0.28	1/10	7,300	8,400	3.0	86	3.3	75.5/63.1	0.84	1,000	68	70	0.96	13.4 ④	4.6 ④	⑦
WSHP-7	HORIZ.	321	HIGH	0.37	1/10	3,700	5,700	1.5	86	3.2	73.6/65.5	0.48	3,000	68	70	0.48	12.8 ④	5.3 ④	⑩
WSHP-8	HORIZ.	348	LOW	0.26	1/10	6,100	7,000	1.5	86	2.2	75.5/63.1	0.60	1,700	68	70	0.60	13.8 ④	5.0 ④	⑥
WSHP-9	HORIZ.	425	HIGH	0.24	1/10	8,900	9,600	3.0	86	3.2	75.6/62.5	0.84	3,100	68	70	0.97	13.4 ④	4.8 ④	⑦
WSHP-10	HORIZ.	526	HIGH	0.25	1/3	11,400	12,300	3.0	86	3.2	75.7/62.6	0.90	4,300	68	70	0.90	15.5 ④	5.3 ④	⑨
WSHP-11	HORIZ.	350	LOW	0.25	1/10	6,600	7,400	1.5	86	2.2	75.6/62.7	0.60	1,400	68	70	0.60	13.8 ④	5.0 ④	⑥
WSHP-12	HORIZ.	350	LOW	0.25	1/10	6,100	7,200	1.5	86	2.2	75.8/63.3	0.60	1,000	68	70	0.60	13.8 ④	5.0 ④	⑥
WSHP-13	HORIZ.	475	HIGH	0.40	1/3	10,800	13,200	3.0	86	3.2	74.9/64.2	0.90	4,400	68	70	0.92	15.5 ④	5.3 ④	⑨
WSHP-14	HORIZ.	525	HIGH	0.25	1/3	12,100	13,500	3.0	86	3.2	75.7/62.6	0.91	2,000	68	70	0.94	15.4 ④	5.3 ④	⑨
WSHP-15	HORIZ.	350	LOW	0.23	1/10	5,300	5,900	3.0	86	9.6	75.8/62.9	0.45	2,000	68	70	0.50	14.1 ④	6.2 ④	⑩
WSHP-16	HORIZ.	336	MED	0.27	1/10	7,000	8,000	3.5	86	10.1	75.0/62.9	0.55	1,900	68	70	0.66	15.0 ④	5.8 ④	⑥
WSHP-17	HORIZ.	900	HIGH	0.30	1/3	16,700	18,700	4.0	86	3.2	74.5/62.2	1.39	3,200	68	70	1.48	16.0 ④	5.2 ④	⑪⑫
WSHP-18	HORIZ.	525	HIGH	0.25	1/3	11,200	12,500	3.0	86	3.2	75.8/62.9	0.91	3,000	68	70	0.94	15.5 ④	5.3 ④	⑨
WSHP-19	HORIZ.	640	HIGH	0.27	1/3	13,300	14,700	3.0	86	4.0	75.3/62.3	1.21	2,300	68	70	1.30	14.8 ④	5.0 ④	⑤
WSHP-20	HORIZ.	470	HIGH	0.26	1/3	10,600	11,900	3.0	86	3.1	75.7/62.7	0.91	2,300	68	70	0.92	15.5 ④	5.3 ④	⑨
WSHP-21	HORIZ.	900	HIGH	0.29	1/3	17,400	19,500	4.0	86	3.2	74.4/62.3	1.39	3,500	68	70	1.50	16.0 ④	5.3 ④	⑪⑫
WSHP-22	HORIZ.	470	HIGH	0.26	1/3	9,900	11,700	3.0	86	3.2	75.8/63.1	0.91	3,600	68	70	0.93	15.5 ④	5.3 ④	⑨
WSHP-23	HORIZ.	665	MED	0.26	1/3	15,300	17,100	4.0	86	3.2	75.6/62.5	1.30	3,100	68	70	1.50	16.0 ④	5.4 ④	⑪
WSHP-24	HORIZ.	530	HIGH	0.25	1/3	10,800	11,700	3.0	86	3.2	76.2/63.0	0.90	2,800	68	70	0.93	15.5 ④	5.3 ④	⑨
WSHP-25	HORIZ.	526	HIGH	0.25	1/3	11,400	12,300	3.0	86	3.2	75.7/62.6	0.90	4,300	68	70	0.90	15.5 ④	5.3 ④	⑨
WSHP-26	HORIZ.	425	HIGH	0.24	1/10	8,900	9,600	3.0	86	3.2	75.6/62.5	0.84	3,100	68	70	0.97	13.4 ④	4.8 ④	⑦
WSHP-27	HORIZ.	348	LOW	0.26	1/10	6,100	7,000	1.5	86	2.2	75.5/63.1	0.60	1,700	68	70	0.60	13.8 ④	5.0 ④	⑥
WSHP-28	HORIZ.	321	HIGH	0.37	1/10	3,700	5,700	1.5	86	3.2	73.6/65.5	0.48	3,000	68	70	0.48	12.8 ④	5.3 ④	⑩
WSHP-29	HORIZ.	370	HIGH	0.28	1/10	7,300	8,400	3.0	86	3.3	75.5/63.1	0.84	1,000	68	70	0.96	13.4 ④	4.6 ④	⑦
WSHP-30	HORIZ.	516	HIGH	0.27	1/3	10,100	12,000	3.0	86	3.1	75.6/62.5	0.91	3,000	68	70	0.92	15.5 ④	5.2 ④	⑨
WSHP-31	HORIZ.	1,970	HIGH	0.45	1.0	39,200	44,800	9.0	86	3.5	75.4/62.8	3.8	7,000	68	70	3.70	14.4 ③	5.3 ③	⑧
WSHP-32	HORIZ.	356	MED	0.22	1/10	7,700	8,800	3.0	86	3.3	75.4/62.9	0.84	1,400	68	70	0.97	13.2 ④	4.8 ④	⑦
WSHP-33	HORIZ.	340	LOW	0.27	1/10	5,600	6,300	1.5	86	2.2	75.3/62.9	0.60	3,200	68	70	0.63	14.8 ④	5.0 ④	⑥
WSHP-34	HORIZ.	550	HIGH	0.31	1/3	12,200	14,700	3.0	86	4.0	75.5/63.2	1.20	7,000	68	70	1.30	14.8 ④	5.4 ④	⑤
WSHP-35	HORIZ.	350	LOW	0.25	1/10	6,600	7,400	1.5	86	2.2	75.6/62.7	0.60	1,400	68	70	0.60	13.8 ④	5.0 ④	⑥
WSHP-36	HORIZ.	350	LOW	0.25	1/10	6,100	7,200	1.5	86	2.2	75.8/63.3	0.60	1,000	68	70	0.60	13.8 ④	5.0 ④	⑥
WSHP-37	HORIZ.	475	HIGH	0.40	1/3	10,800	13,200	3.0	86	3.2	74.9/64.2	0.90	4,400	68	70	0.92	15.5 ④	5.3 ④	⑨
WSHP-38	HORIZ.	525	HIGH	0.25	1/3	12,100	13,500	3.0	86	3.2	75.7/62.6	0.91	2,000	68	70	0.94	15.4 ④	5.3 ④	⑨
WSHP-39	HORIZ.	350	LOW	0.23	1/10	5,300	5,900	3.0	86	9.6	75.8/62.9	0.45	2,000	68	70	0.50	14.1 ④	6.2 ④	⑩
WSHP-40	HORIZ.	336	MED	0.27	1/10	7,000	8,000	3.5	86	10.1	75.0/62.9	0.55	1,900	68	70	0.66	15.0 ④	5.8 ④	⑥
WSHP-41	HORIZ.	900	HIGH	0.30	1/3	16,700	18,700	4.0	86	3.2	74.5/62.2	1.39	3,200	68	70	1.48	16.0 ④	5.2 ④	⑪⑫
WSHP-42	HORIZ.	525	HIGH	0.25	1/3	11,200	12,500	3.0	86	3.2	75.8/62.9	0.91	2,600	68	70	0.94	15.5 ④	5.3 ④	⑨
WSHP-43	HORIZ.	640	HIGH	0.27	1/3	13,300	14,700	3.0	86	4.0	75.3/62.3	1.21	2,300	68	70	1.30	14.8 ④	5.0 ④	⑤
WSHP-44	HORIZ.	470	HIGH	0.26	1/3	10,600	11,900	3.0	86	3.1	75.7/62.7	0.91	2,300	68	70	0.92	15.5 ④	5.3 ④	⑨
WSHP-45	HORIZ.	900	HIGH	0.29	1/3	17,400	19,500	4.0	86	3.2	74.4/62.3	1.39	3,500	68	70	1.50	16.0 ④	5.3 ④	⑪⑫
WSHP-46	HORIZ.	470	HIGH	0.26	1/3	9,900	11,700	3.0	86	3.2	75.8/63.1	0.91	3,600	68	70	0.93	15.5 ④	5.3 ④	⑨
WSHP-47	HORIZ.	665	MED	0.26	1/3	15,300	17,100	4.0	86	3.2	75.6/62.5	1.30	3,100	68	70	1.50	16.0 ④	5.4 ④	⑪
WSHP-48	HORIZ.	530	HIGH	0.25	1/3	10,800	11,700	3.0	86	3.2	76.2/63.0	0.90	4,300	68	70	0.90	15.5 ④	5.3 ④	⑨

REMARKS:

① SAME GPM AS COOLING.
② E.S.P. DOES NOT INCLUDE FILTERS, COILS, OR INTERNAL CASING LOSSES.
③ REFRIGERANT R-410a, 480 VOLT/3 PHASE.
④ REFRIGERANT R-410a, 265 VOLT/1 PHASE.
⑤ FLORIDA HEAT PUMP MODEL EC018.
⑥ FLORIDA HEAT PUMP MODEL EC009.
⑦ FLORIDA HEAT PUMP MODEL EC012.
⑧ FLORIDA HEAT PUMP MODEL EC060.
⑨ FLORIDA HEAT PUMP MODEL EC015.
⑩ FLORIDA HEAT PUMP MODEL EC007.
⑪ FLORIDA HEAT PUMP MODEL EC024.
⑫ PROVIDE UNIT WITH HOT GAS REHEAT.

SPACE SCHEDULE WEST WING

ROOM NUMBER	ROOM NAME	AIR FLOW (CFM)	NO. OCCUPANTS
FIRST FLOOR			
100A	IMRL/TOOL ROOM	506	3
101A	COMPUTER ROOM	45	1
102A	CPO LOUNGE	340	6
103A	CLOSET	N/A	N/A
104A	STAIR #1	N/A	N/A
105A	DET W	356	4
106A	MATERIAL CONTROL	300	5
107A	MAINTENANCE CONTROL	300	5
108A	DET A	330	5
109A	DET B	339	4
110A	DET C	335	6
111A	DET D	366	7
112A	TOILET	25	N/A
114A	QUALITY ASSURANCE	516	7
115A	SDO	115	2
116A	CAREER COUNSELOR	126	3
117A	MAIN ADMIN.	133	2
118A	1ST LT	112	2
119A	JC	20	N/A
120A	MEN	560	N/A
121A	LOCKER RM	120	N/A
122A	SHOWER	50	N/A
123A	DET E	425	6
124A	ELECTRICAL	–	N/A
125A	TELEPHONE	–	N/A
126A	STAIRS #2	N/A	N/A
127A	EM READY ROOM	526	3
128A	MECHANICAL	–	N/A
129A	FIRE PROTECTION	–	–
131A	CORRIDOR A	232	N/A
132A	ENTR. VESTIBULE	44	N/A
133A	ENTR. VESTIBULE	45	N/A
134A	MAIN OFFICER	133	2
135A	I ST LT. STOWAGE	100	2
SECOND FLOOR			
200A	CORRIDOR A	268	N/A
201A	RECEPTION	58	2
202A	ADMINISTRATION	420	6
203A	ADMIN. OFFICER	105	2
204A	DET OIC'S OFFICE	617	24
205A	DET W M.O.	237	4
206A	TRAINING	113	2
207A	CLASSROOM	640	10
208A	AIR INTELLIGENCE	470	6
209A	VAULT	N/A	N/A
210A	OFFICER'S READY ROOM STOWAGE	164	4
211A	OFFICER'S READY ROOM	736	40
212A	PR STOWAGE	166	2
213A	PARACHUTE RIGGER	304	2
214A	EXEC. OFFICER	350	3
215A	COMMANDING OFFICER	336	10
216A	CLOSET	N/A	N/A
217A	STAIR #1	N/A	N/A
218A	CLOSET	N/A	N/A
219A	PAO	122	1
220A	LEGAL	111	1
221A	COMMAND MASTER CHIEF	117	1
222A	JAN	30	N/A
223A	MEN	210	N/A
224A	LOCKER/SHOWER	140	N/A
225A	WOMEN	140	N/A
226A	LOCKER/SHOWER	70	N/A
227A	STORAGE	161	4
228A	OPS OFFICER	96	3
229A	OPERATION'S	569	8
230A	NAVIGATION & FLIGHT PLANNING	530	6
231A	CLOSET	N/A	N/A
232A	STAIR #2	N/A	N/A
233A	COMMUNICATIONS	368	5
234A	VAULT	N/A	N/A
235A	SAFETY & NATOPS	171	3
236A	DET OIC'S OFFICE	284	2

SPACE SCHEDULE EAST WING

ROOM NUMBER	ROOM NAME	AIR FLOW (CFM)	NO. OCCUPANTS
FIRST FLOOR			
100B	IMRL/TOOL ROOM	506	3
101B	COMPUTER ROOM	45	1
102B	CPO LOUNGE	340	6
103B	CLOSET	N/A	N/A
104B	STAIR #2	N/A	N/A
105B	DET W	356	4
106B	MATERIAL CONTROL	300	5
107B	MAINTENANCE CONTROL	300	5
108B	DET A	330	5
109B	DET B	339	4
110B	DET C	335	6
111B	DET D	366	7
112B	TOILET	25	N/A
114B	QUALITY ASSURANCE	516	7
115B	SDO	115	2
116B	CAREER COUNSELOR	126	3
117B	MAIN ADMIN.	133	2
118B	1ST LT	112	2
119B	JC	20	N/A
120B	MEN	560	N/A
121B	LOCKER RM	120	N/A
122B	SHOWER	50	N/A
123B	DET E	425	6
124B	ELECTRICAL	–	N/A
125B	TELEPHONE	–	N/A
126B	STAIRS #1	N/A	N/A
127B	EM READY ROOM	526	3
131B	CORRIDOR B	232	N/A
132B	ENTR. VESTIBULE	44	N/A
133B	ENTR. VESTIBULE	45	N/A
134B	MAIN OFFICER	133	2
135B	I ST LT. STOWAGE	100	2
SECOND FLOOR			
200B	CORRIDOR B	268	N/A
201B	RECEPTION	58	2
202B	ADMINISTRATION	420	6
203B	ADMIN. OFFICER	105	2
204B	DET OIC'S OFFICE	617	24
205B	DET W M.O.	237	4
206B	TRAINING	113	2
207B	CLASSROOM	640	10
208B	AIR INTELLIGENCE	470	6
209B	VAULT	N/A	N/A
210B	OFFICER'S READY ROOM STOWAGE	164	4
211B	OFFICER'S READY ROOM	736	40
212B	PR STOWAGE	166	2
213B	PARACHUTE RIGGER	304	2
214B	EXEC. OFFICER	350	3
215B	COMMANDING OFFICER	336	10
216B	CLOSET	N/A	N/A
217B	STAIR #1	N/A	N/A
218B	CLOSET	N/A	N/A
219B	PAO	122	1
220B	LEGAL	111	1
221B	COMMAND MASTER CHIEF	117	1
222B	JAN	30	N/A
223B	MEN	210	N/A
224B	LOCKER/SHOWER	140	N/A
225B	WOMEN	140	N/A
226B	LOCKER/SHOWER	70	N/A
227B	STORAGE	161	4
228B	OPS OFFICER	96	3
229B	OPERATION'S	569	8
230B	NAVIGATION & FLIGHT PLANNING	530	6
231B	CLOSET	N/A	N/A
232B	STAIR #2	N/A	N/A
233B	COMMUNICATIONS	368	5
234B	VAULT	N/A	N/A
235B	SAFETY & NATOPS	171	3
236B	DET OIC'S OFFICE	284	2

SYM	DESCRIPTION	DATE	APPR

NAVFAC

COMMONWEALTH OF VIRGINIA
DONALD M. GAY
Lic. No. 16234
PROFESSIONAL ENGINEER
SEAL

MMM DESIGN GROUP
ARCHITECTS•ENGINEERS•PLANNERS
300 EAST MAIN STREET
NORFOLK, VIRGINIA 23510
757-623-1641

TST
Turner-Strategic Technologies

APPROVED

FOR COMMANDER NAVFAC
ACTIVITY

SATISFACTORY TO DATE

DES MTF | DRW WFC | CHK DMG
PROJECT MANAGER –
BRANCH MANAGER
CHIEF ENG/ARCH
DATE: MAY 11, 2012

DEPARTMENT OF THE NAVY
NAVAL FACILITIES ENGINEERING COMMAND
HAMPTON ROADS IPT
NAVAL FACILITIES ENGINEERING COMMAND ~ MID-ATLANTIC
NORFOLK, VIRGINIA
NAVAL STATION NORFOLK
NORFOLK, VIRGINIA

LF-59 HANGAR BAY FACILITY

HVAC SCHEDULES

SCALE: AS NOTED
EPROJECT NO.: 1038784
CONSTR. CONTR. NO.
N40085-11-D-6589 0004-01
NAVFAC DRAWING NO.
12615737
SHEET 61 OF X

M-601

DRAWFORM REVISION: 10 MARCH 2009

REV/DATE: FILE NAME: K:\1161200\Working Drawings\Hangar Bay NSN - AutoCAD\Sheets\Construction\M-MECHANICAL\BLDGLF59-1038784-M-601.dwg LAYOUT NAME: M-601 PLOTTED: Friday, May 11, 2012 - 12:29pm

PACKAGED 100% OUTSIDE AIR WATER SOURCE HEAT PUMP SCHEDULE

UNIT NO.	TYPE	SUPPLY FAN ③				EXHAUST FAN ③				COOLING						HEATING ④				OUTSIDE AIR ENERGY WHEEL PERFORMANCE					EXHAUST AIR ENERGY WHEEL PERFORMANCE				LEED INFORMATION		REMARKS	BASIS OF DESIGN
		CFM OA	RPM MAX.	E.S.P. (IN. H_2O)	HP MIN.	CFM EXH. AIR	RPM MAX.	E.S.P. (IN. H_2O)	HP MIN.	TOTAL BTUH (MIN.)	GPM	E.W.T. (°F)	H_2O ΔP (FT. H_2O)	E.A.T. (°FDB/ °FWB)	L.A.T. (°FDB/ °FWB)	MIN. CAPACITY (BTUH)	E.W.T. (°F)	E.A.T. (°F)	L.A.T. (°F)	SUMMER E.A.T. (°FDB/°FWB)	SUMMER L.A.T. (°FDB/°FWB)	WINTER E.A.T. (°F)	WINTER L.A.T. (°FDB/°FWB)	WHEEL EFF. %	SUMMER E.A.T. (°FDB/%RH)	SUMMER L.A.T. (°FDB/°FWB)	WINTER E.A.T. (°FDB/%RH)	WINTER L.A.T. (°FDB/°FWB)	EER @ ARI	COP @ ARI		
PWSHP-1	HORIZ.	2,569	1,107	0.72	1.5	1,550	907	0.87	0.75	161,700	35	90	2.9	82.4/70.8	51.2/50.8	155,200	68	47.2	103.7	92/77	82.4/70.8	20	47.2/39.6	56.6	75/60	90.9/76.5	68/35	23/19.4	18.3	5.8	① ② ⑤	⑦
PWSHP-2	HORIZ.	2,569	1,107	0.72	1.5	1,550	907	0.87	0.75	161,700	35	90	2.9	82.4/70.8	51.2/50.8	155,200	68	47.2	103.7	92/77	82.4/70.8	20	47.2/39.6	56.6	75/60	90.9/76.5	68/35	23/19.4	18.3	5.8	① ② ⑤	⑦

REMARKS:
① 480V/3Ø, MCA = 45.2, MOCP = 50.
② PROVIDE 20KW EMERGENCY ELECTRIC HEATING COIL WITH SCR CONTROLS.
③ E.S.P. DOES NOT INCLUDE FILTERS, COILS, ENERGY RECOVERY WHEEL, FAN, OR INTERNAL CASING LOSS.
④ SAME GPM AS COOLING.
⑤ PROVIDE MODULATING HOT GAS REHEAT, 57 MBH MIN. CAPACITY, WITH A L.A.T. OF 75.5°FDBT.
⑥ REFRIGERANT R-410a.
⑦ FLORIDA HEAT PUMP MODEL RT180-445C.

AIR DISTRIBUTION DEVICE SCHEDULE

TAG	TYPE	FACE SIZE (IN.)	NECK SIZE (IN.)	THROW	MAX. AIR ΔP "W.C.	MIN. THROW	MAX. NC
D1	CEILING DIFFUSER	6x6	6x6	2 WAY CORNER	0.08	5'-9'	25
D2	CEILING DIFFUSER	9x9	9x9	4 WAY	0.08	7'-11'	27
D3	CEILING DIFFUSER	12x12	12x12	4 WAY	0.06	7'-9'	24
D4	CEILING DIFFUSER	9x9	9x9	2 WAY CORNER	0.08	5'-9'	25
D5	CEILING DIFFUSER	6x6	6x6	4 WAY	0.08	5'-8'	25
D6	CEILING DIFFUSER	6x6	6x6	2 WAY	0.08	5'-9'	25
D7	CEILING DIFFUSER	6x6	6x6	1 WAY	0.08	6'-12'	25
D8	CEILING DIFFUSER	6x21	6x21	4 WAY	0.08	①	28
D9	CEILING DIFFUSER	6x18	6x18	4 WAY	0.09	①	28
D10	CEILING DIFFUSER	6x9	6x9	4 WAY	0.08	②	26
D11	CEILING DIFFUSER	6x15	6x15	4 WAY	0.09	②	27
D12	CEILING DIFFUSER	15x15	15x15	4 WAY	0.09	9'-13'	29
D13	CEILING DIFFUSER	9x21	9x21	4 WAY	0.09	③	30
D14	CEILING DIFFUSER	9x9	9x9	3 WAY	0.09	8'-10"	30
R1	TRANSFER GRILLE	6x6	6x6	N/A	0.09	N/A	24
R2	RETURN AIR FILTER GRILLE	12x12	12x12	N/A	0.09 ④	N/A	26
R3	RETURN AIR FILTER GRILLE	16x16	16x16	N/A	0.09 ④	N/A	26
R4	RETURN AIR FILTER GRILLE	10x10	10x10	N/A	0.09 ④	N/A	26
R5	TRANSFER GRILLE	14x14	14x14	N/A	0.09	N/A	26
R6	TRANSFER GRILLE	8x8	8x8	N/A	0.09	N/A	24
E1	EXHAUST GRILLE	4x4	4x4	N/A	0.09	N/A	24
E2	EXHAUST GRILLE	6x6	6x6	N/A	0.09	N/A	24
E3	EXHAUST GRILLE	8x8	8x8	N/A	0.09	N/A	24

REMARKS:
① SHORT SIDE = 4', LONG SIDE = 12'.
② SHORT SIDE = 3', LONG SIDE = 7'.
③ SHORT SIDE = 6', LONG SIDE = 10'.
④ INCLUDES FILTER MEDIA ΔP.

PUMP SCHEDULE

PUMP NO.	VOLT/PHASE	SERVICE	WATER TEMP. (°F)	TYPE	DESIGN CONDITIONS			HP (MIN.)	RPM (MAX.)	APPROX. IMPELLER DIAMETER INCHES	REMARKS	BASIS OF DESIGN
					GPM	HEAD (FT.)	EFFICIENCY (MIN.)					
P-1	480/3	LOOP WATER	60 TO 90	①	218	124	60	15	1750	11.75	③④	②
P-2	480/3	LOOP WATER	60 TO 90	①	218	124	60	15	1750	11.75	③④	②

REMARKS:
① BASE MOUNTED CENTRIFUGAL TYPE.
② B&G MODEL 1510 SIZE 2G.
③ VARIABLE FLOW/SPEED.
④ BASE-MOUNTED.

UNIT HEATER SCHEDULE

UNIT NO.	TYPE	APPROX. CFM	CAPACITY BTUH (MIN.)	KW (MAX.)	STAGES (MIN.)	FAN HP (MIN.)	E.A.T./L.A.T. °F	VOLT/PHASE	REMARKS
EUH-1	HORIZONTAL	360	8,874	2.6	1	1/30	55/77	277/1	①
EUH-2	HORIZONTAL	360	8,874	2.6	1	1/30	55/77	277/1	①

REMARKS:
① PROVIDE WITH ADJUSTABLE HORIZONTAL LOUVERS.

BOILER SCHEDULE

UNIT NO.	TYPE	INPUT BTUH (MIN.)	NET IBR OUTPUT WATER - BTUH (MIN.)	FUEL	FUEL FIRING RATE (MAX.) CU. FT/HR	VOLT/PHASE	BOILER FLA	BOILER CIRCULATOR FLA	REMARKS	BASIS OF DESIGN
B-1	CONDENSING MODULAR	202,500	164,100	NATURAL GAS	202.5	120/1	6.7	8.8	①②③	⑦
B-2	CONDENSING MODULAR	202,500	164,100	NATURAL GAS	202.5	120/1	6.7	8.8	①②③	⑦

REMARKS:
① 4"W.C. MIN./10.5"W.C. MAX. GAS PRESSURE.
② PROVIDE BOILER WITH MANUFACTURERS CONDENSATE NEUTRALIZATION FILTER/KIT.
③ PROVIDE BOILER WITH CONCENTRIC VENT/COMBUSTION AIR WALL KIT.
④ BOILER MANUFACTURER SHALL PROVIDE BOILER CIRCULATOR PUMP, 37 GPM.
⑤ BOILER AND BOILER CIRCULATOR PUMP REQUIRE SEPARATE ELECTRICAL CONNECTIONS.
⑥ PROVIDE BOILER WITH "SMART SYSTEM" DIGITAL OPERATING CONTROL.
⑦ LOCHINVAR KNIGHT XL KBN400.

EXHAUST FAN SCHEDULE

UNIT NO.	SERVICE	TYPE	DRIVE	CFM	E.S.P.- IN. H_2O ③	RPM (MAX.)	TIP SPEED FPM MAX.	HP (MIN.)	VOLT/PHASE	REMARKS	BASIS OF DESIGN
EF-1	MECH. ROOM	②	BELT	1,012	0.33	EF-1	-	1/3	120/1	①	④

REMARKS:
① PROVIDE WITH BACKDRAFT DAMPER WALL HOUSING, HOUSING GUARD, AND WEATHER HOOD.
② SIDEWALL PROPELLER FAN.
③ DOES NOT INCLUDE DRIVE LOSSES.
④ GREENHECK MODEL SBE SIZE 20.

CLOSED CIRCUIT COOLER SCHEDULE

UNIT NO.	CAPACITY MBH (MIN.)	E.A.T.- °FDB/°FWB	GPM	E.W.T. (°F)	L.W.T. (°F)	FAN DATA			REMARKS	BASIS OF DESIGN
						QTY.	HP (MIN.)	VOLT/PHASE		
CCC-1	1,309.2	91/77	218	97	85	2	③	480/3	②④⑤	①

REMARKS:
① MARLEY MODEL MCF7045N081RRG-1.
② PROVIDE UNIT WITH INSULATED DISCHARGE HOOD AND POSITIVE CLOSURE DAMPERS.
③ 1 - 7½HP MOTOR, MOTOR IS 2 SPEED.
④ 3 HP SPRAY PUMP.
⑤ 6KW SUMP HEATER.

EQUIPMENT CAPACITIES:

EXPANSION TANK-1 (ET-1): SHALL BE ASME RATED FOR 125 PSIG WORKING PRESSURE AND SHALL BE CAPTURE AIR TYPE WITH A MINIMUM ACCEPTANCE VOLUME OF 34 GALLONS. BASIS OF DESIGN = B&G MODEL R-4.

AIR SEPARATOR-1 (AS-1): SHALL BE ASME RATED FOR 125 PSIG WORKING PRESSURE AND SHALL HAVE A PRESSURE DROP NOT EXCEEDING 6 FEET WITH A 218 GPM FLOW RATE. BASIS OF DESIGN = B&G MODEL HFT-90V.

NO.	DATE	DESCRIPTION	APVR

NAVFAC

COMMONWEALTH OF VIRGINIA
DONALD M. GAY
Lic. No. 16234
PROFESSIONAL ENGINEER
SEAL

MMM DESIGN GROUP
ARCHITECTS•ENGINEERS•PLANNERS
300 EAST MAIN STREET
NORFOLK, VIRGINIA 23510
757-623-1641

TST Turner-Strategic Technologies

APPROVED
FOR COMMANDER NAVFAC
ACTIVITY
SATISFACTORY TO DATE

DES	MTF	DRW	WFC	CHK	DMG

PROJECT MANAGER –
BRANCH MANAGER
CHIEF ENG/ARCH
DATE: MAY 11, 2012

DEPARTMENT OF THE NAVY
NAVAL FACILITIES ENGINEERING COMMAND
HAMPTON ROADS IPT
NAVAL FACILITIES ENGINEERING COMMAND ~ MID-ATLANTIC
NORFOLK, VIRGINIA
NAVAL STATION NORFOLK
NORFOLK, VIRGINIA
LF-59 HANGAR BAY FACILITY
HVAC SCHEDULES

SCALE: AS NOTED
EPROJECT NO.: 1038784
CONSTR. CONTR. NO. N40085-11-D-6589 0004-01
NAVFAC DRAWING NO. 12615738
SHEET 62 OF X
M-602
DRAWFORM REVISION: 10 MARCH 2009

REVDATE: FILE NAME: K:\1161200\Working Drawings\Hangar Bay NSN - AutoCAD\Sheets\Construction\M-MECHANICAL\BLDGLF59-1038784-M-602.dwg LAYOUT NAME: M-602 HVAC SCHEDULES PLOTTED: Friday, May 11, 2012 - 12:29pm

CONTROLS LEGEND & ABBREVIATION

Symbol	Description
—LWS—	CONDENSER WATER SUPPLY PIPING
—LWR—	CONDENSER WATER RETURN PIPING
—HWS—	HEATING WATER SUPPLY PIPING
—HWR—	HEATING WATER RETURN PIPING
AI	ANALOG INPUT
AO	ANALOG OUTPUT
AV	ACTUATOR VALVE
BI	BINARY INPUT
BO	BINARY OUTPUT
TS	TEMPERATURE SENSOR
C(T)	THERMOSTAT, COOLING ONLY
H(T)	THERMOSTAT, HEATING ONLY
CR	CURRENT RELAY SENSOR
DO	DAMPER OPERATOR
FS	FLOW SENSOR
SP	STATIC PRESSURE SENSOR
DPS	DIFFERENTIAL PRESSURE SENSOR
VO	VALVE OPERATOR
FM	FLOW METER
H	HUMIDITY SENSOR
HSP	HIGH STATIC PRESSURE SENSOR
STR	STARTER
AFMS	AIR FLOW MONITORING STATION
EVAP	EVAPORATOR
HGRH	HOT GAS REHEAT
OATS	OUTDOOR AIR TEMPERATURE SENSOR
COMP.	COMPRESSOR
DX	DIRECT EXPANSION COIL
EF	EXHAUST FAN
HGRH	HOT GAS REHEAT
HW	HOT WATER
N.C.	NORMALLY CLOSED
REV	REVERSING
P	PUMP
PRES.	PRESSURE
RH	RELATIVE HUMIDITY
SP	SPRAY PUMP
SS	SAFETY SWITCH

SYSTEM POINT LIST

SYSTEM POINT DESCRIPTION	ANALOG INPUT									ANALOG OUTPUT	BINARY INPUT			BINARY OUTPUT		SYSTEM FEATURES ALARMS				SYSTEM FEATURES PROGRAMS	NOTES:
MISCELLANEOUS SYSTEM POINTS	TEMPERATURE	RH	CO2	CFH	KWH	KWD	AMPS	GPM	SETPOINT	DDC (HWVALVE)	STATUS	SMOKE DETECTION	CIRCUIT BREAKER STATUS	ON/OFF	OPEN/CLOSE	HIGH ANALOG	LOW ANALOG	SENSOR FAIL	BINARY		
NETWORK LIGHTING CONTROL SYSTEM											X			X							QTY AS REQ'D BY SYSTEM
DUCTLESS SPLIT SYSTEMS (DSS)	X	X									X					X	X	X	X		TYP OF (2) SYSTEMS
HEAT TRACE MONITORING	X										X					X	X	X	X		TYP OF (3) CIRCUITS
NATURAL GAS CONSUMPTION				X														X			TYP OF (1) METER
DOMESTIC BOOSTER PUMP											X			X				X			TYP OF (1) METER
POWER METERING					X	X	X						X					X			TYP OF (2) METERS
DOMESTIC WATER METERING								X										X			TYP OF (1) METER
CLOSED CIRCUIT COOLER MAKEUP WATER METERING								X										X			TYP OF (4) METER
GENERAL NOTES:																					

MISCELLANEOUS POINTS & SEQUENCES

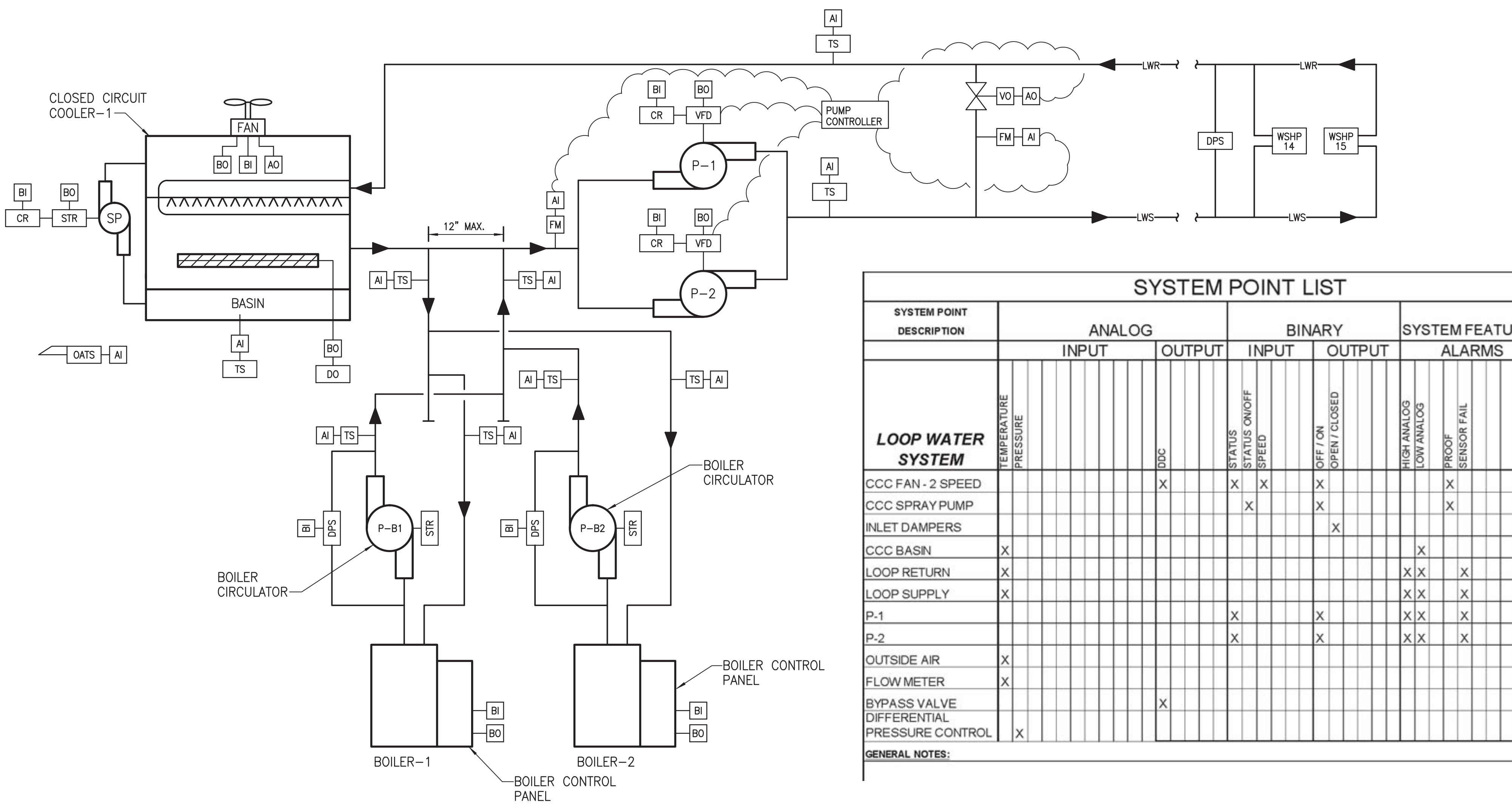

SYSTEM POINT LIST

SYSTEM POINT DESCRIPTION	ANALOG INPUT		ANALOG OUTPUT	BINARY INPUT			BINARY OUTPUT		SYSTEM FEATURES ALARMS				NOTES:
LOOP WATER SYSTEM	TEMPERATURE	PRESSURE	DDC	STATUS	STATUS ON/OFF	SPEED	OFF / ON	OPEN / CLOSED	HIGH ANALOG	LOW ANALOG	PROOF	SENSOR FAIL	
CCC FAN - 2 SPEED			X	X		X	X				X		
CCC SPRAY PUMP					X		X				X		
INLET DAMPERS								X					
CCC BASIN	X									X			
LOOP RETURN	X								X	X		X	
LOOP SUPPLY	X								X	X		X	
P-1				X			X		X	X		X	
P-2				X			X		X	X		X	
OUTSIDE AIR	X												
FLOW METER	X												
BYPASS VALVE			X										
DIFFERENTIAL PRESSURE CONTROL		X											
GENERAL NOTES:													

LOOP WATER SYSTEM CONTROL DIAGRAM

NOT TO SCALE

NETWORK LIGHTING CONTROL SYSTEM:
THE DDC CONTROLLER SHALL MONITOR AND CONTROL ALL POINTS SPECIFIED.

POWER METERING: (2 METERS TOTAL: MOTOR CONTROL CENTER A AND MOTOR CONTROL CENTER B.
THE DDC CONTROLLER SHALL MONITOR ALL POINTS SPECIFIED.

NATURAL GAS METERING:
THE DDC CONTROLLER SHALL MONITOR SINGLE POINT.

DOMESTIC BOOSTER PUMP:
THE DDC CONTROLLER SHALL MONITOR, CONTROL AND ALARM ALL POINTS SPECIFIED IN THE POINTS LIST.

DOMESTIC WATER METER:
THE DDC CONTROLLER SHALL MONITOR AND ALARM SINGLE POINT.

CLOSED CIRCUIT COOLER MAKEUP WATER METER:
THE DDC CONTROLLER SHALL MONITOR.

HEAT TRACE CONTROL AND MONITORING:
THE DDC CONTROLLER SHALL ENABLE THE INDIVIDUAL HEAT TRACE CIRCUITS FOR THE LOOP WATER AND MAKE-UP WATER ON A FALL IN OUTSIDE AIR TEMPERATURE BELOW THE SETPOINT (ADJUSTABLE, INITIALLY SET AT 40 DEGREES F) OF THE DDC CONTROLLER. THE DDC SYSTEM SHALL MONITOR THE STATUS OF THE HEAT TRACE FOR MONITORING AND ALARMING. IF THE DEVICE GOES INTO ALARM, IT SHALL SEND AN ALARM TO THE HOST WORKSTATION.

SEQUENCE OF OPERATION; LOOP WATER SYSTEM CONTROL:

WHENEVER THE DDC CONTROLLER SENSES THAT ANY OF THE FOLLOWING TAKES PLACE THE DDC CONTROLLER SHALL ENERGIZE A LOOP WATER PUMP (P-1 OR P-2) TO RUN CONTINUOUSLY: ANY WATER SOURCE HEAT PUMP OR PACKAGED WATER SOURCE HEAT PUMP THAT REQUIRES HEAT OR COOLING, OR THE OUTDOOR AIR TEMPERATURE FALLS BELOW 45 DEGREES FAHRENHEIT. ONLY AFTER THE SYSTEM PUMP HAS PROVEN FLOW WILL THE EQUIPMENT SERVED BE ABLE TO START.

ON A FALL IN LOOP WATER SUPPLY TEMPERATURE BELOW THE HEATING SETPOINT (68°F, FIELD ADJ.) OF THE DDC CONTROLLER, THE DDC CONTROLLER SHALL ENERGIZE THE HEATING WATER SYSTEM TO MAINTAIN LOOP TEMPERATURE SETPOINT.

ON A RISE IN TEMPERATURE ABOVE THE COOLING SETPOINT (86°F, FIELD ADJ.) OF THE DDC CONTROLLER, THE DDC CONTROLLER SHALL POSITION THE CLOSED CIRCUIT COOLER DAMPER FULLY OPEN. ON A CONTINUED RISE IN TEMPERATURE THE DDC CONTROLLER SHALL ENERGIZE THE SPRAY PUMP, ON A FURTHER RISE IN TEMPERATURE, THE DDC CONTROLLER SHALL ENERGIZE THE CLOSED CIRCUIT COOLER FAN TO LOW SPEED, AND ON A FURTHER RISE IN TEMPERATURE THE CLOSED CIRCUIT COOLER SHALL GO TO HIGH SPEED. ON A FALL IN SUPPLY WATER TEMPERATURE THE REVERSE SEQUENCE SHALL OCCUR.

ALL HEAT PUMPS SHALL BE ORGANIZED IN ZONES SO THAT DURING INITIAL MORNING STARTUP, ALL HEAT PUMPS WILL NOT ENERGIZE AT THE SAME TIME. THE DDC CONTROLLER SHALL BE PROGRAMMED TO STAGGER THE START OF EACH ZONE.

WHENEVER THE LOOP TEMPERATURE FALLS BELOW AN ADJUSTABLE SETPOINT OF 45°F OR RISES ABOVE AN ADJUSTABLE SETPOINT OF 100°F (HIGH AND LOW TEMP ALARMS) THE DDC CONTROLLER SHALL DE-ENERGIZE ALL WATER SOURCE HEAT PUMPS AND PACKAGE WATER SOURCE HEAT PUMPS.

LOOP WATER PUMP CONTROL (TYPICAL FOR P-1 & P-2)
THE H-O-A SELECTOR SWITCH, LOCATED ON THE FACE OF THE VFD WILL INDEX A PUMP FOR OPERATION, ONE PUMP IS FOR STANDBY. WHEN THE H-O-A SWITCH IS PLACED IN THE "AUTO" POSITION, OPERATION OF THE PUMP WILL BE FULLY AUTOMATIC AND AS DESCRIBED HEREAFTER.

THE DDC SYSTEM SHALL START THE LEAD LOOP WATER PUMP THROUGH DDC START/STOP CONTACTS AND PUMP SAFETY CONTROLS. SHOULD THE PUMP SAFETY CONTROLS SENSE AN ABNORMAL MOTOR OPERATING CONDITION, THE PUMP WILL STOP AND INPUT AN ALARM SIGNAL TO THE DDC. SHOULD SAFETY CONTROLS STOP THE PUMP, A MANUAL RESET ACTION WILL BE REQUIRED BEFORE THE PUMP CAN RESTART. IF THE SELECTED LEAD PUMP'S PROOF SWITCH DOES NOT DETECT FLOW WITHIN 30 SECONDS FROM THE START SIGNAL, THE DDC WILL DE-ENERGIZE THE FAILED PUMP, START THE LAG PUMP, AND TRANSMIT A PUMP FAILURE ALARM MESSAGE TO THE CENTRAL COMPUTER OPERATOR WORKSTATION AND ALARM PRINTER. THE LAG LOOP WATER PUMP WILL START AND RUN CONTINUOUSLY. A PROGRAMMED ANTI-RECYCLE TIMER WILL PREVENT PUMP SHORT CYCLING. THE DDC WILL ALTERNATE LEAD AND LAG PUMPS ON A WEEKLY BASIS. THE LOOP WATER PUMPS CONTROLLER SHALL CONTROL THE LEAD PUMP'S VFD TO CONTROL THE SPEED OF THE PUMP TO MAINTAIN THE REQUIRED PRESSURE DIFFERENTIAL IN THE SYSTEM. LOCATE THE PRESSURE DIFFERENTIAL SENSOR WHERE INDICATED ON THE HVAC CONTROL DIAGRAMS. TARGET PRESSURE DIFFERENTIAL IS 10 PSI. THE PRESSURE DIFFERENTIAL SENSOR SHALL BE FIELD ADJUSTABLE, AS THE SYSTEMS REQUIRED PRESSURE DIFFERENTIAL WILL HAVE TO BE CALCULATED/MEASURED AT COMPLETION OF THE INSTALLATION OF THE LOOP WATER SYSTEM.

IF THE H-O-A SWITCH IS PLACED IN THE "HAND" POSITION, THE DDC START/STOP CONTACTS WILL BE BYPASSED, AND THE PUMP WILL START THROUGH SAFETY CONTROLS AS PREVIOUSLY DESCRIBED. THE "HAND" POSITION OF THE H-O-A SWITCH WILL NOT BYPASS SAFETY CONTROLS, AND THESE CONTROLS WILL REMAIN CAPABLE OF STOPPING THE PUMP AS PREVIOUSLY DESCRIBED.

COMMONWEALTH OF VIRGINIA
DONALD M. GAY
Lic. No. 16234
PROFESSIONAL ENGINEER
SEAL

MMM DESIGN GROUP
ARCHITECTS+ENGINEERS+PLANNERS
300 EAST MAIN STREET
NORFOLK, VIRGINIA 23510
757-623-1641

TST Turner Strategic Technologies

APPROVED
FOR COMMANDER NAVFAC
ACTIVITY
SATISFACTORY TO DATE
DES MTF | DRW WFC | CHK DMG
PROJECT MANAGER —
BRANCH MANAGER
CHIEF ENG/ARCH
DATE: MAY 11, 2012

DEPARTMENT OF THE NAVY
NAVAL FACILITIES ENGINEERING COMMAND
NAVAL FACILITIES ENGINEERING COMMAND ~ MID-ATLANTIC
NORFOLK, VIRGINIA
HAMPTON ROADS IPT
NAVAL STATION NORFOLK
NORFOLK, VIRGINIA
LF-59 HANGAR BAY FACILITY
HVAC CONTROL DIAGRAMS AND POINTS LISTS

SCALE: AS NOTED
EPROJECT NO.: 1038784
CONSTR. CONTR. NO. N40085-11-D-6589 0004-01
NAVFAC DRAWING NO. 12615739
SHEET 63 OF X
M-701
DRAWFORM REVISION: 10 MARCH 2009

REVDATE: FILE NAME: K:\1161200\Working Drawings\Hangar Bay NSN - AutoCAD\Sheets\Construction\M-MECHANICAL\BLDGLF59-1038784-M-701.dwg LAYOUT NAME: M-701 HVAC CONTROL DIAGRAMS AND POINTS LISTS PLOTTED: Friday, May 11, 2012 - 12:29pm

SYSTEM POINT LIST

SYSTEM POINT DESCRIPTION	ANALOG INPUT: TEMPERATURE	ANALOG INPUT: PRESSURE	ANALOG INPUT: PERCENT RUN	ANALOG OUTPUT: DDC	BINARY INPUT: ALARM	BINARY INPUT: STATUS	BINARY INPUT: FAULT	BINARY OUTPUT: ENABLE / DISABLE	SYS FEATURES ALARMS: HIGH ANALOG	SYS FEATURES ALARMS: LOW ANALOG	SYS FEATURES ALARMS: BINARY	SYS FEATURES ALARMS: FLOW FAIL	SYS FEATURES ALARMS: SENSOR FAIL	NOTES:
HEATING WATER SYSTEM														
BOILER	X				X			X	X	X	X		X	NOTE 1
BOILER CIRC. PUMP						X								NOTE 1
HEATING WATER SUPPLY	X								X	X			X	
HEATING WATER RETURN	X								X	X			X	
RETURN TO BOILERS	X								X	X			X	
SUPPLY TO LOOP	X								X	X			X	

GENERAL NOTES: NOTE 1 TYPICAL EACH BOILER

HEATING WATER SYSTEM

NOT TO SCALE

SEQUENCE OF OPERATION; HOT WATER SYSTEM CONTROL:

THE BOILER MANUFACTURER'S CONTROLS WILL CONTROL THE STAGING OF THE TWO BOILERS BASED ON LOAD DEMAND AND CONTROL INDIVIDUAL BOILER CIRCULATING PUMPS. THE DDC WILL START HEATING WATER PUMPS AND ENABLE THE BOILERS THROUGH THE BOILER MANUFACTURER'S SEQUENCING PANEL, AND PROVIDE A SIGNAL TO THE MANUFACTURE'S CONTROL PANEL TO CONTROL THE HEATING WATER SUPPLY TEMPERATURE TO THE BUILDING. BOILERS WILL OPERATE IN SEQUENCE AND MAINTAIN LEAVING HEATING WATER TEMPERATURE THROUGH THEIR OWN CONTROLS BASED ON AN EXTERNAL HEATING WATER TEMPERATURE CONTROL SIGNAL FROM THE DDC SYSTEM. IF THE SYSTEM LOAD SHOULD BEGIN TO FALL BELOW THE LOAD CAPACITY OF THE BOILERS, THE BOILER MANUFACTURER'S SEQUENCING CONTROL PANEL WILL SEQUENCE OFF BOILERS SO THAT NO MORE BOILERS ARE IN OPERATION THAN IS REQUIRED TO MEET THE REDUCED LOAD. THE BOILER MANUFACTURER'S SEQUENCING CONTROL PANEL WILL ALTERNATE LEAD AND LAG BOILERS ON A WEEKLY BASIS. THE DDC CONTROLS WILL ENABLE AND DISABLE THE BOILERS, MONITOR HEATING WATER SUPPLY AND RETURN TEMPERATURE, AND MONITOR BOILER ALARM STATUS.

BOILER CONTROL (TYPICAL FOR B–1 AND B–2):
AFTER THE DDC HAS STARTED THE LEAD LOOP WATER PUMP, THE DDC WILL ENABLE THE LEAD BOILER THROUGH THE BOILER MANUFACTURER'S SEQUENCING CONTROL PANEL. THE LEAD BOILER WILL START AND OPERATE TO MAINTAIN LEAVING HEATING WATER TEMPERATURE AT ITS SETPOINT THROUGH ITS OWN CONTROLS. THE BOILER MANUFACTURER'S SEQUENCING CONTROL PANEL SHALL SELECT A DIFFERENT BOILER WEEKLY TO ACT AS THE LEAD, INDEXING THE OTHER BOILER AS LAG BOILER IN SEQUENTIAL ORDER.

THE BOILER MANUFACTURER'S SEQUENCING CONTROL PANEL SHALL STAGE THE BOILERS TO MAXIMIZE TIME SPENT AT THE LOWEST FIRING RATE, MAXIMIZING EFFICIENCIES.

SHOULD THE HEATING WATER SUPPLY TEMPERATURE BEGIN TO FALL BELOW ITS CALCULATED SETPOINT, THE BOILER MANUFACTURER'S SEQUENCING CONTROL PANEL SHALL SEQUENCE ON THE ADDITIONAL BOILER TO MAINTAIN HEATING WATER SETPOINT. SHOULD THE HEATING WATER SUPPLY TEMPERATURE BEGIN TO RISE ABOVE ITS CALCULATED SETPOINT, THE REVERSE WILL OCCUR.

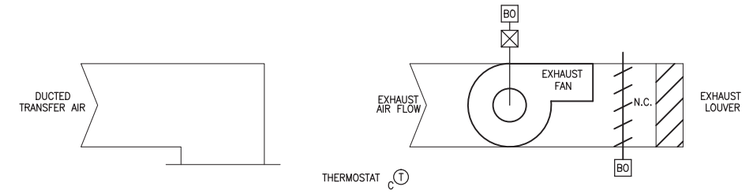

SYSTEM POINT LIST

SYSTEM POINT DESCRIPTION	ANALOG INPUT	ANALOG OUTPUT: DAMPER POSITION	BINARY INPUT: STATUS	BINARY OUTPUT: ON/OFF	SYS FEATURES ALARMS: FAILURE	NOTES
EF-1						
EXHAUST FAN START/STOP				X	X	
EXHAUST FAN STATUS			X			
EXHAUST AIR DAMPER STATUS		X				

GENERAL NOTES:

EXHAUST FAN EF-1 CONTROL DIAGRAM

NOT TO SCALE

SYSTEM POINT LIST

SYSTEM POINT DESCRIPTION	ANALOG INPUT: BACNET	ANALOG INPUT: TEMPERATURE	ANALOG INPUT: CFM	ANALOG INPUT: PRESSURE	ANALOG OUTPUT: DDC	BINARY INPUT: STATUS ON / OFF	BINARY INPUT: STATUS	BINARY INPUT: FAULT	BINARY OUTPUT: TIMED OVERRIDE	BINARY OUTPUT: OFF / ON	BINARY OUTPUT: OPEN / CLOSED	SYS FEATURES ALARMS: HIGH ANALOG	SYS FEATURES ALARMS: LOW ANALOG	SYS FEATURES ALARMS: BINARY	SYS FEATURES ALARMS: PROOF	SYS FEATURES ALARMS: SENSOR FAIL	NOTES:
100% OUTDOOR AIR UNIT: PWSHP-1 (TYPICAL FOR PWSHP-2)																	
SUPPLY AIR		X										X	X			X	
EXHAUST AIR		X										X	X			X	
OUTSIDE AIR		X	X									X	X			X	
WHEEL ENTERING		X										X	X			X	
WHEEL LEAVING		X										X	X			X	
EMERGENCY ELEC. HEAT		X										X	X			X	
SUPPLY FAN					X		X	X		X					X		
EXHAUST FAN					X		X	X		X					X		
WHEEL FAN					X		X	X		X					X		
UNIT ENABLE/DISABLE										X							
LOOP WATER LEAVING		X										X	X			X	
HGRH VALVE					X												
OUTSIDE AIR DAMPERS											X						
EXHAUST AIR DAMPERS											X						
HIGH STATIC PRESSURE							X							X			
FREEZE STAT							X							X			
SMOKE DETECTOR							X							X			
EVAPORATOR		X											X			X	
COMPRESSOR STATUS							X							X			TYP QTY OF 2
LOW PRESSURE							X							X			TYP QTY OF 2
HIGH PRESSURE							X							X			TYP QTY OF 2
1ST STAGE DX										X							TYP QTY OF 2
2ND STAGE DX										X							TYP QTY OF 2
FILTER DIFFERENTIAL PRESSURE			X									X					TYP QTY OF 2

GENERAL NOTES: NOTE 1: SMOKE DETECTOR AND HIGH STATIC SWITCH WIRED IN SERIES TO EMERGENCY SHUTDOWN CIRCUIT

SEQUENCE OF OPERATION; PWSHP–1 (TYPICAL FOR PWSHP–2):

PWSHP–1 MANUFACTURER'S CONTROLS SHALL CONTROL ITS OPERATION BASED ON DISCHARGE AIR TEMPERATURE. THE DDC SHALL ENABLE THE PWSHP THROUGH THE MANUFACTURER'S SEQUENCING PANEL AND PROVIDE A SIGNAL TO THE PANEL TO CONTROL THE UNIT'S DISCHARGE AIR TEMPERATURE BASED ON AN EXTERNAL CONTROL SIGNAL FROM THE DDC SYSTEM. THE DDC CONTROLS SHALL ENABLE AND DISABLE THE PWSHP, AND THE FOLLOWING MINIMUM BACNET POINTS SHALL BE AVAILABLE: DISCHARGE AIR TEMPERATURE, SUPPLY FAN STATUS, SUPPLY FAN ALARM, EXHAUST AIR TEMPERATURE, EXHAUST FAN STATUS, HOT GAS REHEAT VALVE POSITION, OCCUPANCY STATE, COOLING STATUS, EMERGENCY ELECTRIC HEAT STATUS AND OUTDOOR AIRFLOW QUANTITY.

DURING MORNING WARM–UP AND/OR MORNING COOL–DOWN PWSHP–1 SHALL REMAIN DE–ENERGIZED. AT OCCUPANCY TIME, THE DDC CONTROLLER SHALL ENABLE PWSHP–1 ONLY AFTER LOOP WATER FLOW HAS BEEN PROVEN. ON A SIGNAL FROM THE DDC CONTROLLER, PWSHP–1 SHALL BE ENABLED, THE HEAT WHEEL, SUPPLY AND EXHAUST FANS SHALL BE ENERGIZED AND RUN CONTINUOUSLY AND THE OUTSIDE AIR AND EXHAUST AIR DAMPERS SHALL BE OPENED FULLY. THE DDC CONTROLLER SHALL MONITOR THE QUANTITY OF OUTSIDE AIR DELIVERED BY AN AIR FLOW MONITORING STATION MOUNTED IN THE OUTSIDE AIR STREAM.

UNIT SHALL MAINTAIN A CONSTANT DISCHARGE AIR TEMPERATURE OF 75°F. ON A FALL IN DISCHARGE AIR TEMPERATURE TO THE SETPOINT OF THE DDC CONTROLLER, THE CONTROLLER SHALL MODULATE THE EMERGENCY ELECTRIC HEAT. ON A RISE IN DISCHARGE AIR TEMPERATURE TO THE SETPOINT OF THE DDC CONTROLLER, THE CONTROLLER SHALL MODULATE CLOSED TO THE COIL. ON A CONTINUED RISE IN DISCHARGE AIR TEMPERATURE THE CONTROLLER SHALL ENERGIZE MECHANICAL COOLING IN STAGES. HOT GAS REHEAT SHALL BE ENABLED IN CONJUNCTION WITH COOLING TO MAINTAIN CONSTANT DISCHARGE AIR TEMPERATURE.

WHENEVER THE ADJUSTABLE SETTING OF THE FREEZESTAT IS REACHED (35°F), THE FREEZESTAT SHALL STOP THE UNIT SUPPLY AND EXHAUST AIR FANS, CLOSE THE OUTSIDE AIR AND EXHAUST AIR DAMPERS AND SEND AN ALARM TO THE HOST WORK STATION.

ON DETECTION OF PRODUCTS OF COMBUSTION, THE SMOKE DETECTOR SHALL STOP THE UNIT SUPPLY AND EXHAUST AIR FANS, CLOSE THE OUTSIDE AIR AND EXHAUST AIR DAMPERS AND SEND AN ALARM TO THE HOST WORK STATION AND FIRE ALARM SYSTEM.

DURING UNOCCUPIED TIME, THE DDC CONTROLLER SHALL DISABLE PWSHP–1. ON A SIGNAL FROM THE DDC CONTROLLER, PWSHP–1 SHALL BE DISABLED, THE HEAT WHEEL, SUPPLY AND EXHAUST FANS SHALL BE DE–ENERGIZED AND THE OUTSIDE AIR AND EXHAUST AIR DAMPERS SHALL BE CLOSED FULLY. PWSHP–1SHALL NOT OPERATE IN UNOCCUPIED MODE EXCEPT FOR FREEZE–PROTECTION PURPOSES.

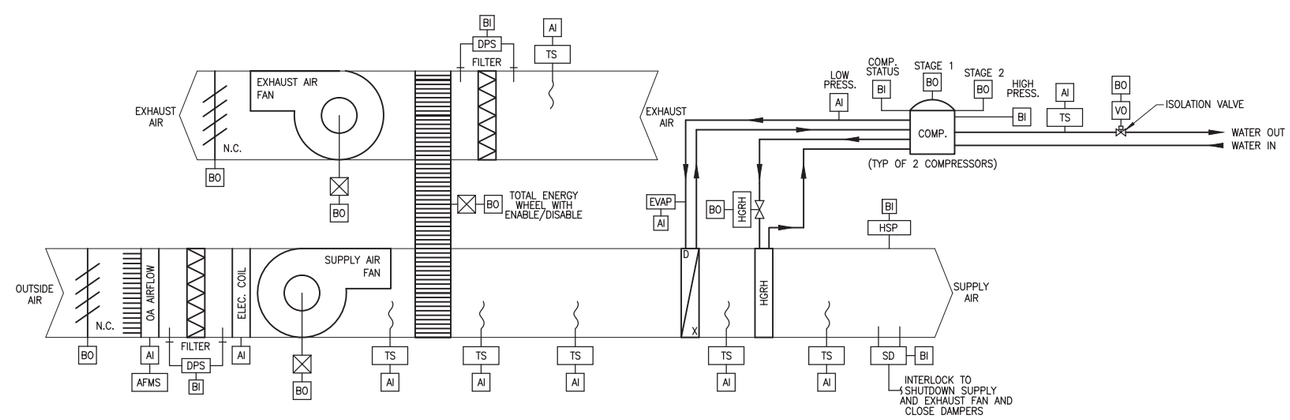

PWSHP-1 CONTROL DIAGRAM (TYPICAL FOR PWSHP-2)

NOT TO SCALE

SYM	DESCRIPTION	DATE	APVD

NAVFAC

COMMONWEALTH OF VIRGINIA
DONALD M. GAY
Lic. No. 16234
PROFESSIONAL ENGINEER
SEAL

MMM DESIGN GROUP
ARCHITECTS•ENGINEERS•PLANNERS
300 EAST MAIN STREET
NORFOLK, VIRGINIA 23510
757–623–1641

TST Turner Strategic Technologies

APPROVED

FOR COMMANDER NAVFAC

ACTIVITY

SATISFACTORY TO DATE

DES MTF | DRW WFC | CHK DMG

PROJECT MANAGER –

BRANCH MANAGER

CHIEF ENG/ARCH

DATE: MAY 11, 2012

DEPARTMENT OF THE NAVY
NAVAL FACILITIES ENGINEERING COMMAND
HAMPTON ROADS IPT
NAVAL FACILITIES ENGINEERING COMMAND ~ MID-ATLANTIC
NORFOLK, VIRGINIA
NAVAL STATION NORFOLK
NORFOLK, VIRGINIA

LF-59 HANGAR BAY FACILITY

HVAC CONTROL DIAGRAMS AND POINTS LISTS

SCALE: AS NOTED

EPROJECT NO.: 1038784

CONSTR. CONTR. NO. N40085–11–D–6589 0004–01

NAVFAC DRAWING NO. 12615740

SHEET 64 OF X

M-702

DRAWFORM REVISION: 10 MARCH 2009

REVDATE: FILE NAME: K:\1161200\Working Drawings\Hanger Bay NSN – AutoCAD\Sheets\Construction\M–MECHANICAL\BLDGLF59–1038784–M–702.dwg LAYOUT NAME: M–702 HVAC CONTROL DIAGRAMS AND POINTS LISTS PLOTTED: Friday, May 11, 2012 – 12:29pm

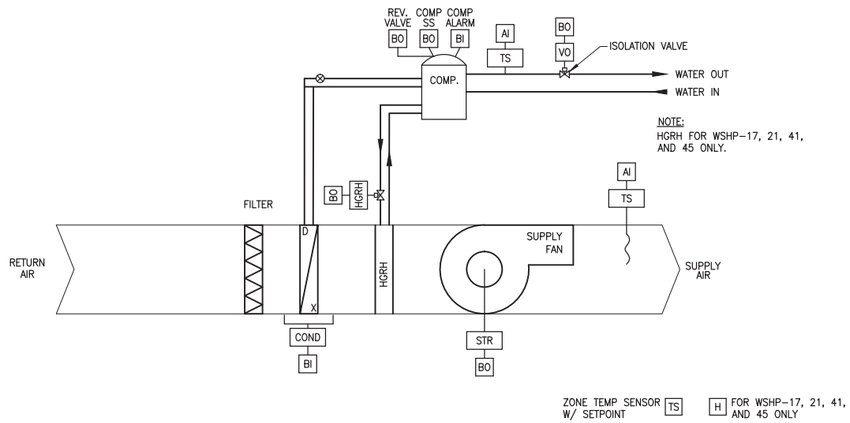

WATER SOURCE HEAT PUMP CONTROL DIAGRAM (TYPICAL FOR ALL WSHP'S)

NOT TO SCALE

SYSTEM POINT LIST

SYSTEM POINT DESCRIPTION	ANALOG INPUT		ANALOG OUTPUT	BINARY INPUT		BINARY OUTPUT		SYS FEATURES ALARMS				
WATER SOURCE HEAT PUMPS	TEMPERATURE	SETPOINT		CANCEL ALARM	TIMED OVERRIDE STATUS	OFF / ON	OPEN/CLOSED	HIGH ANALOG	LOW ANALOG	BINARY	SENSOR FAIL	NOTES:
SPACE	X	X		X	X			X	X		X	
FAN						X						
COMPRSSOR					X	X						NOTE 1
DISCHARGE AIR	X							X	X		X	
LEAVING WATER	X							X	X		X	
REVERSING VALVE						X						
CONDENSATE OVERFLOW										X		
AUTOMATIC ISOLATION VALVE							X					

GENERAL NOTES: NOTE 1: COMPRESSOR SHALL ALARM ON HIGH/LOW PRESSURE CUTOL

SEQUENCE OF OPERATION; WSHP UNITS:

UNOCCUPIED OPERATION – IN THE UNOCCUPIED MODE THE UNIT SHALL BE SHUT OFF. IF THE SPACE TEMPERATURE AS SENSED BY THE ZONE SENSOR FALLS ABOVE OR BELOW THE UNOCCUPIED SETPOINT, THE COMPRESSOR, FAN, AND REVERSING VALVE SHALL BE ENERGIZED BASED ON THE NEED FOR EITHER HEATING OR COOLING UNTIL THE UNOCCUPIED SETPOINT IS REACHED.

TRANSITION FROM UNOCCUPIED TO OCCUPIED – WHEN THE WATER SOURCE UNITS TRANSITION FROM THE UNOCCUPIED MODE TO THE OCCUPIED MODE, MORNING WARM-UP OR MORNING COOL-DOWN AND RANDOM START PROGRAMS SHALL BE ACTIVATED, AND THE OUTSIDE AIR DAMPER SHALL BE OPENED.

MORNING WARM-UP – WHEN THERE IS A CALL FOR HEATING AND THE ZONE TEMPERATURE IS 2 F OFF SETPOINT, A MORNING WARM-UP SHALL BE INITIATED. THE COMPRESSOR AND THE FAN SHALL BE TURNED ON. WHEN THE ZONE TEMPERATURE REACHES THE HEATING SETPOINT 70°F, THE DDC CONTROLLER SHALL OPERATE IN THE OCCUPIED MODE.
MORNING COOL-DOWN – WHEN THERE IS A CALL FOR HEATING AND THE ZONE TEMPERATURE IS 2 F OFF SETPOINT, A MORNING COOL-DOWN SHALL BE INITIATED. THE COMPRESSOR AND FAN SHALL BE TURNED ON, AND THE REVERSING VALVE SHALL BE ENERGIZED. WHEN THE ZONE TEMPERATURE REACHES THE COOLING SETPOINT 75°F, THE DDC CONTROLLER SHALL OPERATE IN THE OCCUPIED MODE.

RANDOM START (STANDARD) – RANDOM START OF THE UNIT ON ELECTRIC POWER UP IS INTENDED TO PREVENT ALL UNITS IN THE BUILDING FROM ENERGIZING MAJOR LOADS AT THE SAME TIME. THE FAN AND COMPRESSOR START SHALL BE DELAYED FROM 3 TO 32 SECONDS WHEN POWER HAS BEEN EITHER RESTORED AFTER A LOSS OR OUTAGE, OR AFTER THE UNIT IS ENABLED. IF THERE IS NO CALL FOR COOLING OR HEATING, OR IF NO FAN OPERATION IS REQUIRED DURING THE DELAY, THE TIME DELAY SHALL BE ALLOWED TO TIME OUT.

UNOCCUPIED HEAT PUMP OPERATION – THE HEAT PUMP SHALL OPERATE TO MAINTAIN BOTH THE COOLING AND HEATING SETPOINTS WITHIN A ZONE. THE COMPRESSOR, FAN, AND REVERSING VALVE SHALL BE ENERGIZED TO MAINTAIN THE COOLING SETPOINT. WHEN THERE IS A CALL FOR HEATING, THE UNIT SHALL OPERATE TO MAINTAIN THE SETPOINT.

HEAT/COOL SETPOINT AND MODE – THE SPACE TEMPERATURE COOLING SETPOINT SHALL BE DETERMINED EITHER BY A LOCAL SETPOINT ADJUSTMENT KNOB, THE DDC CONTROLLER DEFAULT SETPOINT, OR BAS CONTROL. IF THE BAS IS NOT COMMUNICATING, THE DDC CONTROLLER SHALL USE DEFAULT SETPOINTS OR LOCAL ZONE SENSOR CONTROL.

COOLING SETPOINT LIMITING – THE COOLING SETPOINT SHALL BE LIMITED BY ADJUSTABLE PARAMETERS IN THE DDC CONTROLLER OR THE BAS TO PREVENT IT FROM BEING SET TOO HIGH OR LOW. THE TRANSITION FROM HEAT TO COOL SHALL BE BASED ON THE TIME BETWEEN SETPOINT CHANGE. IN THE UNOCCUPIED MODE, THE SETPOINTS SHALL BE WIDENED TO ACCOMMODATE NIGHT SETBACK AND ARE ADJUSTABLE.

WHEN THE UNIT'S COMPRESSOR CYCLES OFF, THE UNIT'S 2 POSITION 2 WAY ISOLATION VALVE SHALL CLOSE AND BYPASS THE LOOP WATER SUPPLY TO THE LOOP WATER RETURN. WHEN THE UNIT'S COMPRESSOR IS INDEXED TO ENERGIZE, THE UNIT'S 2 POSITION 2 WAY ISOLATION VALVE SHALL OPEN TO THE UNIT'S HEAT EXCHANGER AND CLOSE THE BYPASS TO THE LOOP WATER RETURN.

FAN OPERATION – DURING THE OCCUPIED MODE THE FAN SHALL RUN CONTINUOUSLY

COMPRESSOR OPERATION – COMPRESSOR OPERATION SHALL BE CYCLED BASED UPON LOAD CONDITIONS AS SENSED BY A ZONE OR DISCHARGE AIR TEMPERATURE SENSOR. COMPRESSOR OPERATION SHALL BE OVERRIDDEN BY A PRESET THREE MINUTE MINIMUM ON/OFF TIME DELAY IN ORDER TO MAINTAIN OIL RETURN WHEN THE UNIT IS EITHER INITIALLY ENERGIZED, MANUALLY RESET, SWITCHED BETWEEN MODES, OR CYCLED WITHIN A SINGLE MODE.

REVERSING VALVE SHALL BE ENERGIZED IN THE COOLING MODE. ONCE THE VALVE IS ENERGIZED FOR COOLING IT SHALL STAY ENERGIZED UNTIL A HEATING CYCLE IS INITIATED. THE REVERSING VALVE OPERATION SHALL BE DELAYED AFTER COMPRESSOR SHUTDOWN TO REDUCE NOISE DUE TO REFRIGERANT MIGRATION. IN THE EVENT OF A POWER FAILURE THE REVERSING VALVE SHALL FAIL TO THE HEATING MODE.

COMPRESSOR CYCLE LIMIT – THE COMPRESSOR OPERATES WITH MINIMUM 3 MINUTE ON AND 3 MINUTE OFF CYCLES TO MAINTAIN OIL RETURN FOR EXTENDED LIFE OF THE COMPRESSOR.

SMART RESET – THE DDC CONTROLLER SHALL AUTOMATICALLY TRY TO RESTART THE A UNIT THAT IS LOCKED-OUT ON A HIGH PRESSURE, LOW PRESSURE, OR LOW TEMPERATURE DETECTION. THIS WILL OCCUR 30 MINUTES AFTER THE DIAGNOSTIC AND IF THE UNIT RUNS SUCCESSFULLY THE DIAGNOSTIC IS CLEARED. IF THE UNIT UNDERGOES THE SAME DIAGNOSTIC WITHIN A 24 HOUR PERIOD THE UNIT IS LOCKED-OUT UNTIL IT IS MANUALLY RESET.

REVERSING VALVE DELAY – THE REVERSING VALVE DELAY IS INHERENT DUE TO THE COMPRESSOR CYCLE LIMIT. THE DELAY PREVENTS THE REVERSING VALVE FROM CHANGING POSITIONS AGAINST THE LARGE DIFFERENTIALS IN REFRIGERANT PRESSURES DURING THE CHANGE FROM COOLING TO HEATING AND VISA VERSA, ELIMINATING THE NOISE NORMALLY HEARD DUE TO REFRIGERANT MIGRATION.

LOW /HIGH PRESSURE CUTOUT – THE LOW PRESSURE SWITCH IS A NORMALLY CLOSED SWITCH WHICH OPENS TO LOCK OUT THE COMPRESSOR UNDER LOW REFRIGERANT CIRCUIT PRESSURE CONDITIONS. THE HIGH PRESSURE SWITCH IS NORMALLY A CLOSED SWITCH WHICH OPENS UNDER HIGH REFRIGERANT CIRCUIT PRESSURE CONDITIONS WHICH SHALL LOCKOUT THE COMPRESSOR.

LOW TEMPERATURE PROTECTION – THE LOW TEMPERATURE PROTECTION IS INTENDED TO SENSE AND PREVENT WATER COIL FREEZE UP FOR LOW WATER TEMPERATURE CONDITIONS. A LOW TEMPERATURE CONDITION IS INTENDED TO STOP AND LOCKOUT COMPRESSOR OPERATION UNTIL A RESET OF THE CONTROL IS DONE.

CONDENSATE OVERFLOW – A CONDENSATE OVERFLOW ALARM MEANS THE SWITCH IN THE WSHP'S PRIMARY CONDENSATE PAN HAS SENSED THE PAN IS FULL AND REQUIRES SERVICING. WHEN ALARMED, THE WSHP SHALL DE-ENERGIZE.

SYM	DESCRIPTION	DATE	APVR

NAVFAC

COMMONWEALTH OF VIRGINIA
DONALD M. GAY
Lic. No. 16234
PROFESSIONAL ENGINEER
SEAL

MMM DESIGN GROUP
ARCHITECTS•ENGINEERS•PLANNERS
300 EAST MAIN STREET
NORFOLK, VIRGINIA 23510
757-623-1641

TST Turner-Strategic Technologies

APPROVED

FOR COMMANDER NAVFAC

ACTIVITY

SATISFACTORY TO DATE

DES MTF | DRW WFC | CHK DMG

PROJECT MANAGER –

BRANCH MANAGER

CHIEF ENG/ARCH

DATE: MAY 11, 2012

DEPARTMENT OF THE NAVY
NAVAL FACILITIES ENGINEERING COMMAND
HAMPTON ROADS IPT
NAVAL FACILITIES ENGINEERING COMMAND ~ MID-ATLANTIC
NORFOLK, VIRGINIA
NAVAL STATION NORFOLK
NORFOLK, VIRGINIA

LF-59 HANGAR BAY FACILITY

HVAC CONTROL DIAGRAMS AND POINTS LISTS

SCALE: AS NOTED
EPROJECT NO.: 1038784
CONSTR. CONTR. NO. N40085-11-D-6589 0004-01
NAVFAC DRAWING NO. 12615741
SHEET 65 OF X

M-703

DRAWFORM REVISION: 10 MARCH 2009

REVDATE: FILE NAME: K:\1161200\Working Drawings\Hangar Bay NSN - AutoCAD\Sheets\Construction\M-MECHANICAL\BLDGLF59-1038784-M-703.dwg LAYOUT NAME: M-703 HVAC CONTROL DIAGRAMS AND POINTS LISTS PLOTTED: Friday, May 11, 2012 - 12:29pm

LP-21 Record Drawings

Bowman, Foster & Associates, P.C.
Consulting Engineers
Norfolk, VA 23502

LEGEND

—HWS—	HOT WATER SUPPLY PIPING
—HWR—	HOT WATER RETURN PIPING
—CWS—	CONDENSER WATER SUPPLY PIPING
—CWR—	CONDENSER WATER RETURN PIPING
—D—	CONDENSATE DRAIN PIPING
	BACKFLOW PREVENTER
	BALANCING VALVE (GLOBE VALVE/SQUARE HEAD COCK)
	GATE VALVE
	CHECK VALVE
	BUTTERFLY VALVE
	STRAINER WITH BLOWDOWN VALVE
	3-WAY AUTO CONTROL VALVE
	PRESSURE REDUCING VALVE
	2-WAY AUTO CONTROL VALVE
	THERMOMETER
	FLEXIBLE PIPING CONNECTION
	PRESSURE GAUGE SHUT-OFF COCK
	AUTOMATIC AIR VENT
	UNION
	PIPE SLOPE (DOWN IN ARROW DIRECTION)
	FLOW CONTROL BALANCING VALVE W/PRESSURE TAPS (L/S NOTED)
	GAS SHUT-OFF COCK
	RELIEF VALVE
	PIPE CAP
	DIRECTION OF FLOW
	THERMOMETER WELL

	UNDER CUT
	DOOR LOUVER
A 100	GRILLE OR DIFFUSER MARK – SEE SCHEDULE OR SPECIFICATION (L/S NOTED)
	SUPPLY DUCT SECTION
	RETURN OR EXHAUST DUCT SECTION
SA	SUPPLY AIR
RA	RETURN AIR
OA	OUTSIDE AIR
FD	FIRE DAMPER WITH ACCESS DOOR
VCD	VOLUME CONTROL DAMPER
T	HEATING AND COOLING TEMPERATURE SENSOR, MOUNT 1525 ABOVE FLOOR
T V	VENTILATION TEMPERATURE SENSOR, MOUNT 1525 ABOVE FLOOR
F	FAN SWITCH-FLUSH MOUNT 1370 ABOVE FLOOR
	ELBOW WITH TURNING VANES
SD	SPLITTER DAMPER
BD	MANUAL BALANCING DAMPER W/LOCKING QUADRANT
	FLEXIBLE DUCT CONNECTION
	(AD) ACCESS DOOR
M	MOTORIZED CONTROL DAMPER
S	SMOKE DETECTOR
CP-1	CONDENSER PUMP MARK-SEE SCHEDULE
EF-1	EXHAUST FAN MARK-SEE SCHEDULE
HP-1	HEAT PUMP UNIT MARK-SEE SCHEDULE
CCC-1	CLOSED CIRCUIT COOLER MARK-SEE SCHEDULE
ITH-1	INFRARED TUBE HEATER MARK-SEE SCHEDULE
ET-1	EXPANSION TANK MARK-SEE SCHEDULE
AS-1	AIR REMOVAL MARK-SEE SCHEDULE
H-1	HOOD MARK-SEE SCHEDULE
DR-1	REFRIGERATED AIR DRYER
R-1	AIR RECEIVER
AC-1	AIR COMPRESSOR
#	NUMBER
B-1	BOILER
UH-1	UNIT HEATER
HWH-1	HOT WATER HEATER
L-1	LOUVER

ABBREVIATIONS

A/C	AIR CONDITIONING
CCC	CLOSED CIRCUIT COOLER
AD	ACCESS DOOR
AFF	ABOVE FINISHED FLOOR
AFG	ABOVE FINISHED GRADE
HP	HEAT PUMP
∡	ANGLE
APD	AIR PRESSURE DROP
APPROX	APPROXIMATELY
BD	BALANCING DAMPER
BDD	BACK DRAFT DAMPER
C	CELSIUS
CDB	CELSIUS DRY BULB
CMU	CONCRETE MASONRY UNIT
CONFIG	CONFIGURATION
COP	COEFFICIENT OF PERFORMANCE
CWB	CELSIUS WET BULB
DDC	DIRECT DIGITAL CONTROL
DN	DOWN
DPR	DAMPER
EAT	ENTERING AIR TEMPERATURE
EDB	ENTERING DRY BULB
EWT	ENTERING WATER TEMPERATURE
EWB	ENTERING WET BULB
ESP	EXTERNAL STATIC PRESSURE
EXIST	EXISTING
FD	FIRE DAMPER WITH ACCESS DOOR
FFL	FINISHED FLOOR LEVEL
FLA	FULL LOAD AMPS
GC	GENERAL CONTRACTOR
HOA	HAND-OFF-AUTO
ID	INSIDE DIAMETER
KPa	KILOPASCAL
kW	KILOWATT
Kv	SYSTEM CONSTANT (ALSO CALLED VALVE COEFFICIENT) Kv x 1.17 = Cv

LAT	LEAVING AIR TEMPERATURE
LWB	LEAVING WET BULB
LWT	LEAVING WATER TEMPERATURE
l/s	LITERS PER SECOND
MAX	MAXIMUM
MCA	MAXIMUM CIRCUIT AMPS
MIN	MINIMUM
MFS	MAXIMUM FUSE SIZE
mm	MILLIMETERS
M^2	SQUARE METERS
M/S	METERS PER SECOND
NC	NORMALLY CLOSED
NIC	NOT IN CONTRACT
NO	NORMALLY OPEN
NOM	NOMINAL
OA	OUTSIDE AIR
OD	OUTSIDE DIAMETER
P	PHASE
Pa	PASCAL
PD	PRESSURE DROP
PH	PHASE
PRV	PRESSURE RELIEF VALVE
RA	RETURN AIR
RPM	REVOLUTIONS PER MINUTE
RH	RELATIVE HUMIDITY
RLA	RUN LOAD AMPS
SA	SUPPLY AIR
SP	STATIC PRESSURE
TS	TIP SPEED
T'STAT	THERMOSTAT
TYP	TYPICAL
UG	UNDERGROUND
VDC	VOLTS DIRECT CURRENT
WPD	WATER PRESSURE DROP
%	PERCENT

SYM.	DESCRIPTION	DATE	APPR.

GLENN & SADLER
ENGINEERS & ARCHITECTS
a division of
RUNSYSTEMS CORPORATION
Town Point Center
150 Boush Street • Suite 1000
Norfolk, Virginia 23510-2618 • USA
Phone 757-627-1118
Fax 757-627-1113
www.transystems.com

COMMONWEALTH OF VIRGINIA
Douglas K. Henderson
No. 022387
8/10/01
PROFESSIONAL ENGINEER
SEAL

APPROVED
ACTIVITY – SATISFACTORY TO
DATE
APPROVED
FOR EFD FOR COMMANDER NAVFAC
9/26/01
DATE

A/E		EFD
PEH	DESIGN	
KLB	DRAWN	
DKH	REVIEW	ETC
GTJ	QC	
RDF	CHIEF ARCH / ENGR.	

PROJECT MANAGER
FIRE PROTECTION
BRANCH MANAGER
DESIGN DIRECTOR

DEPARTMENT OF THE NAVY
NAVAL FACILITIES ENGINEERING COMMAND
ATLANTIC DIVISION
NAVAL STATION
CHAMBERS FIELD, NAVAL STATION
NORFOLK, VIRGINIA
NORFOLK, VIRGINIA
P-523
AIRCRAFT MAINTENANCE HANGAR
LEGEND AND ABBREVIATIONS

CODE ID NO. 80091 | SIZE D
SCALE. AS NOTED
EFD NO.
STA. PROJ NO. P-523
SPEC NO. 05-00-0101
CONSTR. CONTR. NO
N62470-00-B-0101
NAVFAC DRAWING NO.
4450891
SHEET 204 OF 270
M-001
DRAWFORM REVISION MAY 2000

Bowman, Foster & Associates, P.C.
Consulting Engineers
Norfolk, VA 23502

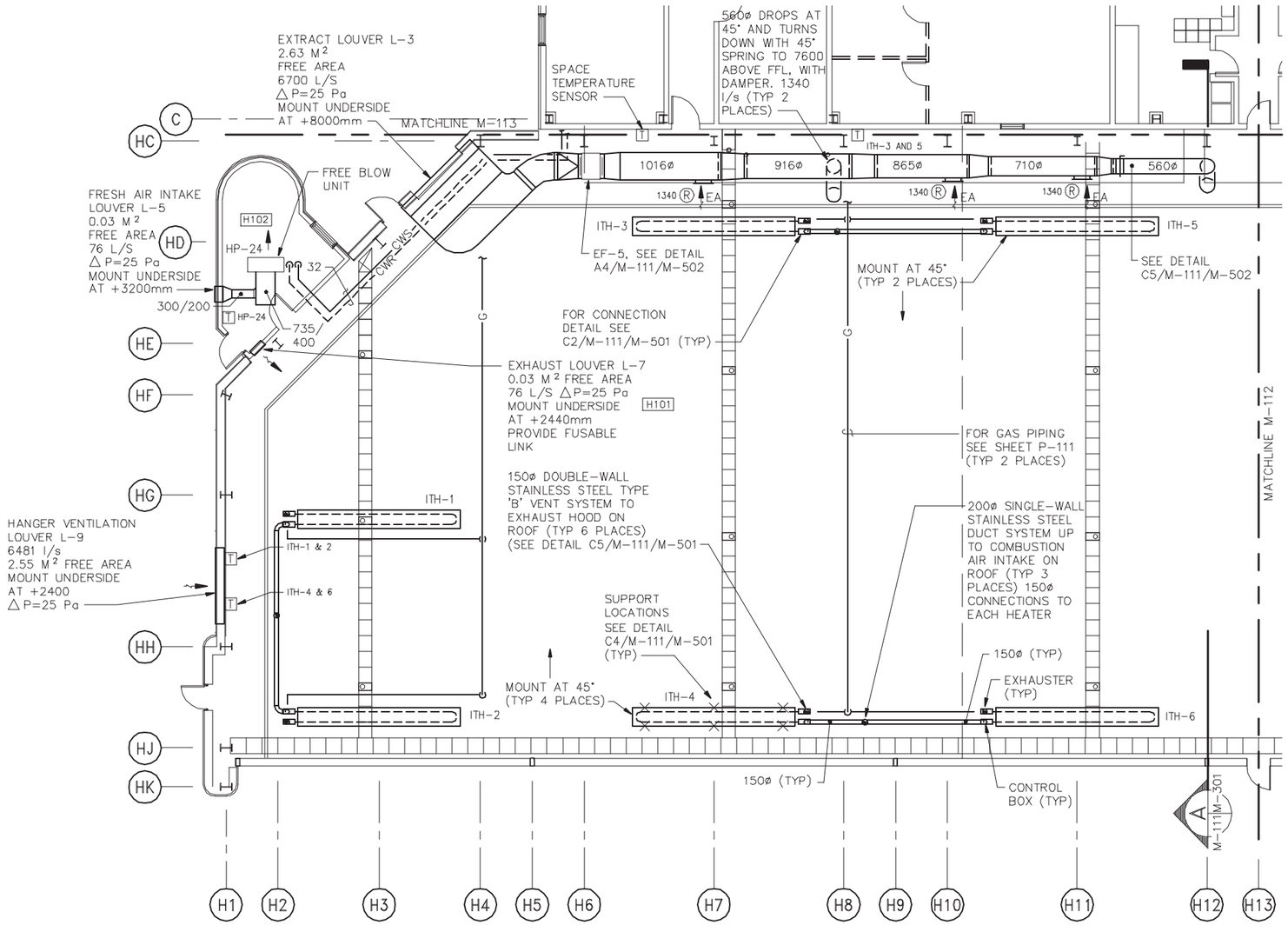

PARTIAL FIRST FLOOR PLAN – MECHANICAL

SCALE: 1 : 100

NOTES

1. DUCT SIZES ARE IN MILLIMETERS (mm).
2. EQUIPMENT SCHEDULES ON SHEET M-601 AND M-602.
3. LEGEND AND ABBREVIATIONS ON SHEET M-001.

PLAN NORTH

M111

KEY PLAN

DIMENSIONS ARE MILLIMETERS.

0 1000 3000 5000

1:100 GRAPHIC SCALE (mm)

NOTE: IF THIS DRAWING IS A REDUCTION, GRAPHIC SCALE MUST BE USED.

SYM.	DESCRIPTION	DATE	APPR.

GLENN & SADLER
ENGINEERS & ARCHITECTS
a division of TRANSYSTEMS CORPORATION
Town Point Center
150 South Monroe Street • Suite 1000
Norfolk, Virginia 23510-2811 • USA
Phone 757-627-1118
Fax 757-627-1112
www.transystems.com

COMMONWEALTH OF VIRGINIA
Douglas K. Henderson
No. 022397
9/10/01
PROFESSIONAL ENGINEER
SEAL

APPROVED

ACTIVITY – SATISFACTORY TO

DATE

APPROVED
FOR EFD FOR COMMANDER NAVFAC
9/26/01

DATE

A/E		EFD
PEH	DESIGN	
KLB	DRAWN	
DKH	REVIEW	ETC
GTJ	QC	
RDF	CHIEF ARCH / ENGR.	

PROJECT MANAGER
FIRE PROTECTION
BRANCH MANAGER
DESIGN DIRECTOR

DEPARTMENT OF THE NAVY
NAVAL STATION
CHAMBERS FIELD, NAVAL STATION
NAVAL FACILITIES ENGINEERING COMMAND
ATLANTIC DIVISION
NORFOLK, VIRGINIA
NORFOLK, VIRGINIA

AIRCRAFT MAINTENANCE HANGAR P-523

PARTIAL FIRST FLOOR PLAN – MECHANICAL

CODE ID NO. 80091 | SIZE D
SCALE. AS NOTED
EFD NO.
STA. PROJ NO. P-523
SPEC NO. 05-00-0101
CONSTR CONTR. NO
N62470-00-B-0101
NAVFAC DRAWING NO.
4450892
SHEET 205 OF 270

M-111

DRAWFORM REVISION MAY 2000

Bowman, Foster & Associates, P.C.
Consulting Engineers
Norfolk, VA 23502

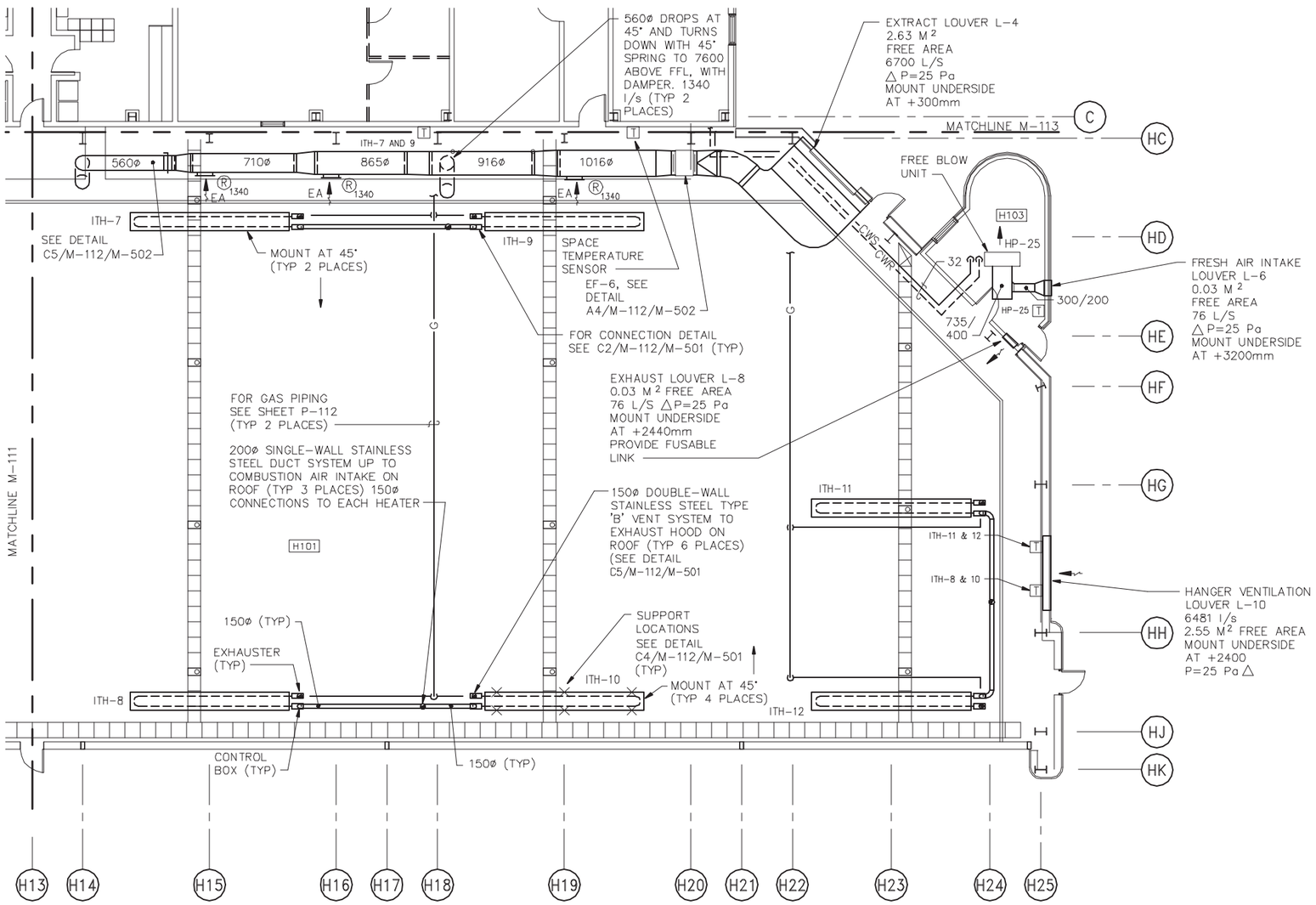

PARTIAL FIRST FLOOR PLAN – MECHANICAL

SCALE: 1 : 100

NOTES

1. DUCT SIZES ARE IN MILLIMETERS (mm).
2. EQUIPMENT SCHEDULES ON SHEET M-601 AND M-602.
3. LEGEND AND ABBREVIATIONS ON SHEET M-001.

PLAN NORTH

M112

KEY PLAN

DIMENSIONS ARE MILLIMETERS.

0 1000 3000 5000

1:100 GRAPHIC SCALE (mm)

NOTE: IF THIS DRAWING IS A REDUCTION, GRAPHIC SCALE MUST BE USED.

			APPR
			DATE
			DESCRIPTION
			SYM

GLENN & SADLER
ENGINEERS & ARCHITECTS
a division of TRANSYSTEMS CORPORATION
Town Point Center
150 Boush Street, Suite 1000
Norfolk, Virginia 23510-1626
Phone 757-627-1112
Fax 757-627-1113
www.transystems.com

COMMONWEALTH OF VIRGINIA
Douglas K. Henderson
No. 022397
9/10/01
PROFESSIONAL ENGINEER
SEAL

APPROVED
ACTIVITY – SATISFACTORY TO
DATE
APPROVED
FOR EFD FOR COMMANDER NAVFAC
9/26/01
DATE

A/E		EFD
PEH	DESIGN	
KLB	DRAWN	
DKH	REVIEW	ETC
CTJ	QC	
RDF	CHIEF ARCH / ENGR.	

PROJECT MANAGER
FIRE PROTECTION
BRANCH MANAGER
DESIGN DIRECTOR

DEPARTMENT OF THE NAVY
NAVAL FACILITIES ENGINEERING COMMAND
ATLANTIC DIVISION
NAVAL STATION
CHAMBERS FIELD, NAVAL STATION
NORFOLK, VIRGINIA
NORFOLK, VIRGINIA

AIRCRAFT MAINTENANCE HANGAR
P-523
PARTIAL FIRST FLOOR PLAN – MECHANICAL

CODE ID NO. 80091 | SIZE D
SCALE: AS NOTED
EFD NO.
STA. PROJ NO. P-523
SPEC NO. 05-00-0101
CONSTR CONTR. NO
N62470-00-B-0101
NAVFAC DRAWING NO.
4450893
SHEET 206 OF 270

M-112

DRAWFORM REVISION MAY 2000

Bowman, Foster & Associates, P.C.
Consulting Engineers
Norfolk, VA 23502

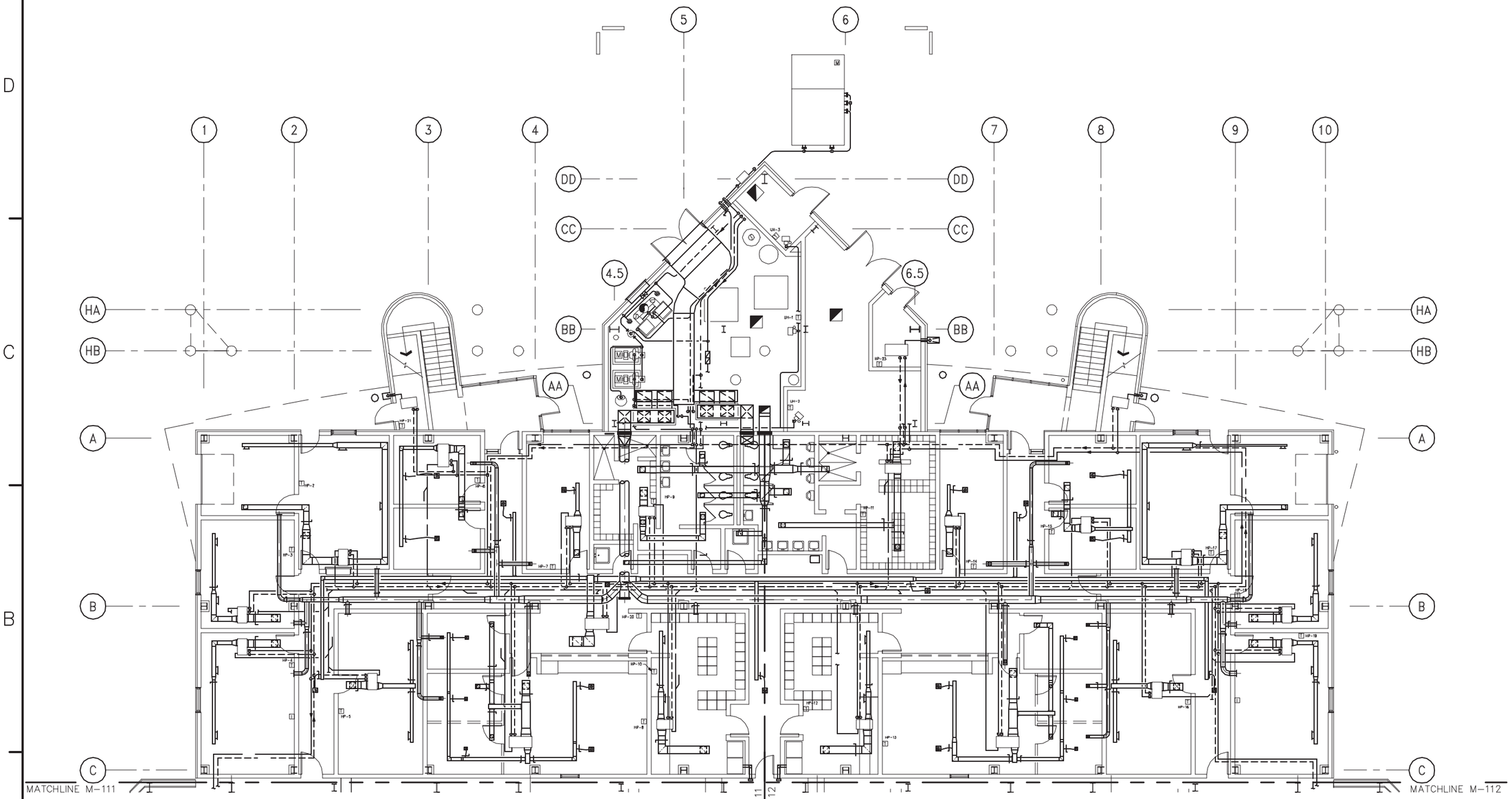

PARTIAL FIRST FLOOR PLAN
SCALE: 1 : 100

PLAN NORTH

M113
KEY PLAN

DIMENSIONS ARE MILLIMETERS.
0 1000 3000 5000
1:100 GRAPHIC SCALE (mm)

NOTE: IF THIS DRAWING IS A REDUCTION, GRAPHIC SCALE MUST BE USED.

SYM.	DESCRIPTION	DATE	APPR.

GLENN & SADLER
ENGINEERS & ARCHITECTS
a division of TRANSYSTEMS CORPORATION
Town Point Center
150 South Monroe Street, Suite 1000
Norfolk, Virginia 23510-1828
Phone 757-627-1118
Fax 757-627-1113
www.transystems.com

COMMONWEALTH OF VIRGINIA
Douglas K. Henderson
No. 022397
8/10/01
PROFESSIONAL ENGINEER
SEAL

APPROVED
ACTIVITY – SATISFACTORY TO
DATE
APPROVED
FOR EFD FOR COMMANDER NAVFAC
7/26/01
DATE

A/E		EFD
PEH	DESIGN	
KLB	DRAWN	
DKH	REVIEW	ETC
GTJ	QC	
RDF	CHIEF ARCH / ENGR.	
	PROJECT MANAGER	
	FIRE PROTECTION	DRF
	BRANCH MANAGER	JTM
	DESIGN DIRECTOR	

DEPARTMENT OF THE NAVY
NAVAL FACILITIES ENGINEERING COMMAND
ATLANTIC DIVISION
NORFOLK, VIRGINIA
NAVAL STATION
CHAMBERS FIELD, NAVAL STATION
NORFOLK, VIRGINIA
P-523
AIRCRAFT MAINTENANCE HANGAR
PARTIAL FIRST FLOOR PLAN – MECHANICAL

CODE ID NO. 80091 | SIZE D
SCALE. AS NOTED
EFD NO.
STA PROJ NO. P-523
SPEC NO. 05-00-0101
CONSTR. CONTR. NO
N62470-00-B-0101
NAVFAC DRAWING NO.
4450894
SHEET 207 OF 270
M-113

DRAWFORM REVISION MAY 2000

Bowman, Foster & Associates, P.C.
Consulting Engineers
Norfolk, VA 23502

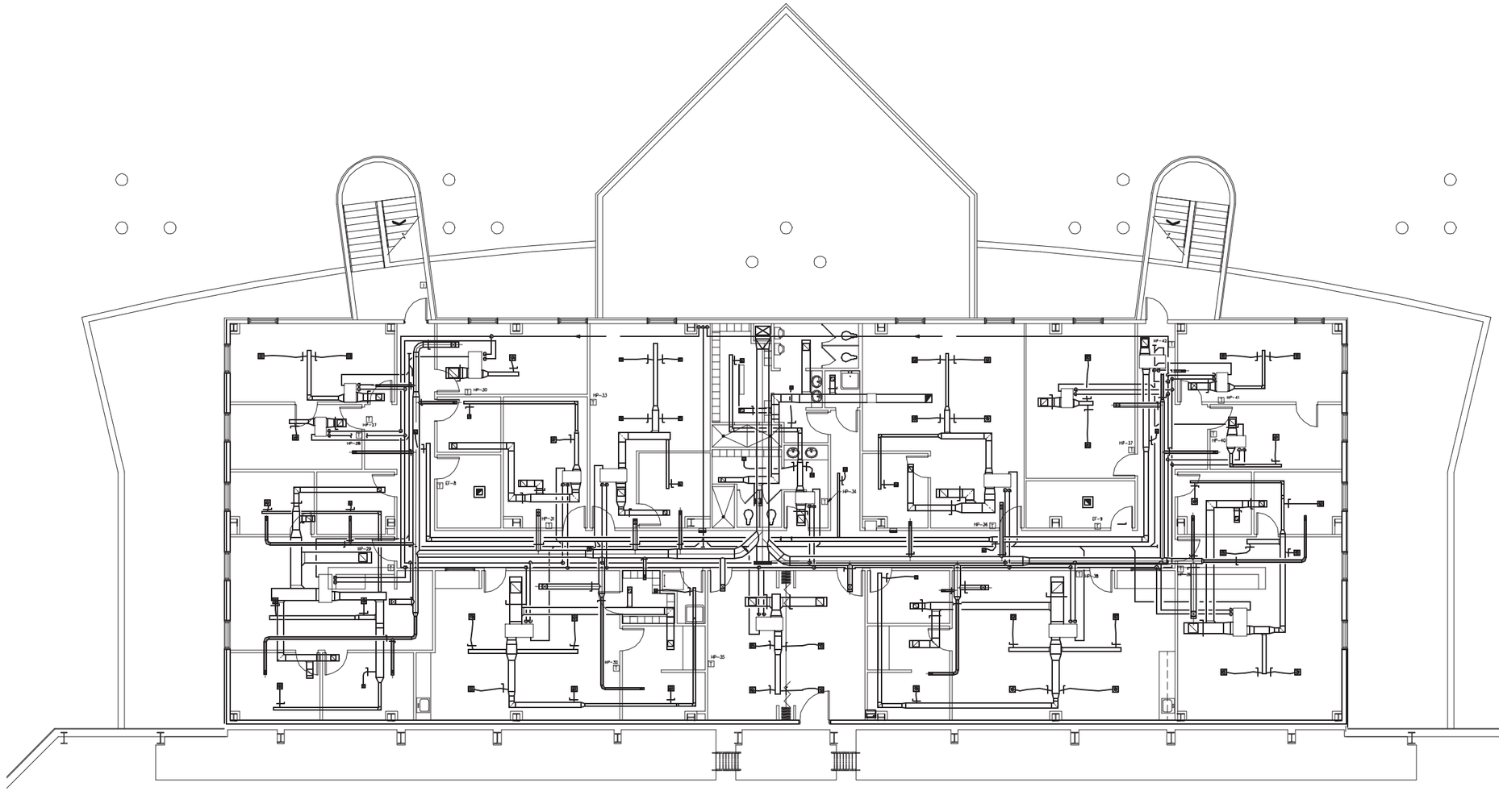

PARTIAL SECOND FLOOR PLAN

SCALE: 1 : 100

PLAN NORTH

M123

KEY PLAN

DIMENSIONS ARE MILLIMETERS.

0 1000 3000 5000

1:100 GRAPHIC SCALE (mm)

NOTE: IF THIS DRAWING IS A REDUCTION, GRAPHIC SCALE MUST BE USED.

SYM.	DESCRIPTION	DATE	APPR.

GLENN & SADLER
ENGINEERS & ARCHITECTS
a division of
TRANSYSTEMS CORPORATION

Town Point Center
150 Boush Street • Suite 1000
Norfolk, Virginia 23510-2618
Phone 757-627-1118
Fax 757-627-1112
www.transystems.com

COMMONWEALTH OF VIRGINIA
Douglas K. Henderson
No. 022397
8/10/01
PROFESSIONAL ENGINEER
SEAL

APPROVED

ACTIVITY – SATISFACTORY TO

DATE

APPROVED
FOR EFD FOR COMMANDER NAVFAC
9/26/01

DATE

A/E		EFD
PEH	DESIGN	
KLB	DRAWN	
DKH	REVIEW	ETC
GTJ	QC	
RDF	CHIEF ARCH / ENGR.	

PROJECT MANAGER
FIRE PROTECTION
BRANCH MANAGER
DESIGN DIRECTOR

DEPARTMENT OF THE NAVY
NAVAL STATION
NAVAL FACILITIES ENGINEERING COMMAND
ATLANTIC DIVISION
NORFOLK, VIRGINIA
NAVAL STATION
CHAMBERS FIELD,
NORFOLK, VIRGINIA

AIRCRAFT MAINTENANCE HANGAR
P-523
PARTIAL SECOND FLOOR PLAN – MECHANICAL

CODE ID NO. 80091 | SIZE D
SCALE. AS NOTED
EFD NO.
STA. PROJ NO. P-523
SPEC NO. 05-00-0101
CONSTR CONTR. NO
N62470-00-B-0101
NAVFAC DRAWING NO.
4450895
SHEET 208 OF 270

M-123

DRAWFORM REVISION MAY 2000

Bowman, Foster & Associates, P.C.
Consulting Engineers
Norfolk, VA 23502

NOTES

1. DUCT SIZES ARE IN MILLIMETERS (mm).
2. EQUIPMENT SCHEDULES ON SHEET M-601 AND M-602.
3. LEGEND AND ABBREVIATIONS ON SHEET M-001.

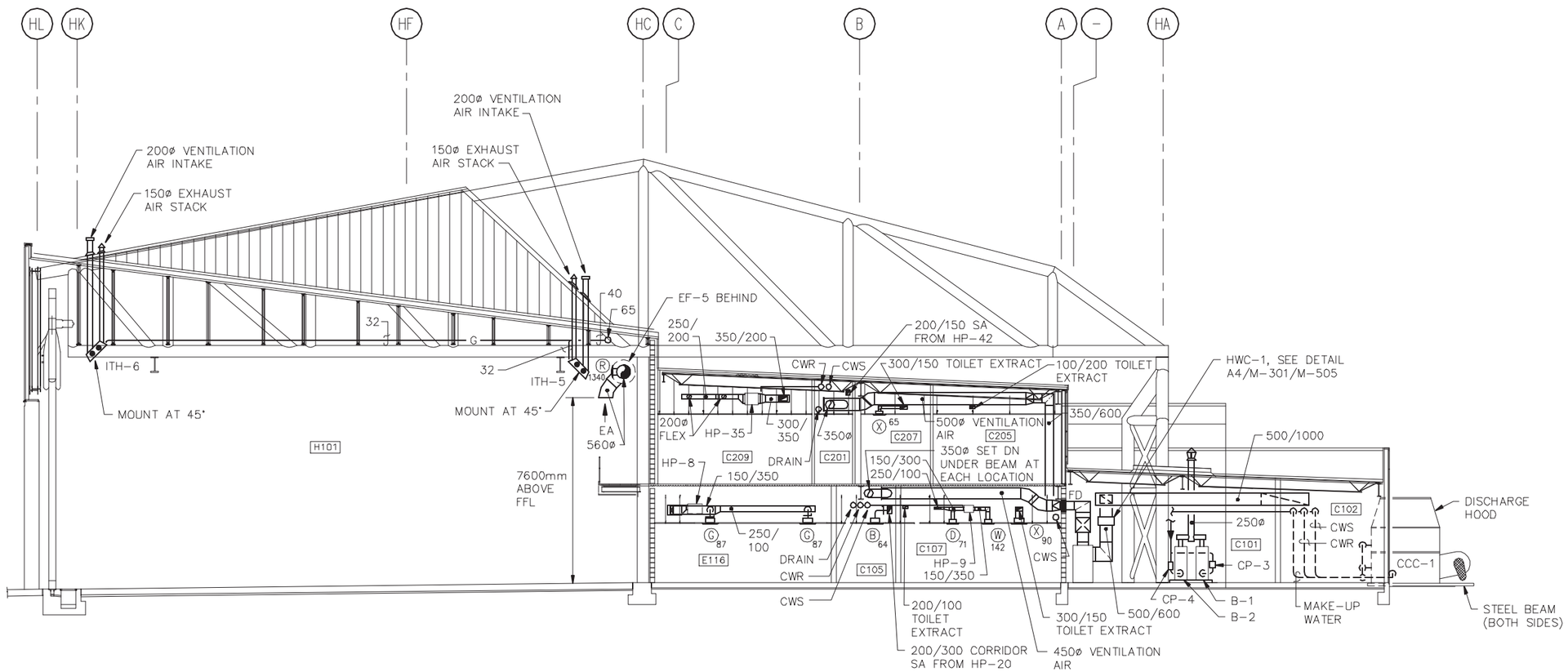

SECTION

SCALE: 1 : 100

1
M-111, M-112, M-113, M-413 | M-301

NOTE: IF THIS DRAWING IS A REDUCTION, GRAPHIC SCALE MUST BE USED.

DIMENSIONS ARE MILLIMETERS.

0 1000 3000 5000

1:100 GRAPHIC SCALE (mm)

SYM.	DESCRIPTION	DATE	APPR.

GLENN & SADLER
ENGINEERS & ARCHITECTS
a division of
TRANSYSTEMS CORPORATION
Town Point Center
150 Boush Street • Suite 1000
Norfolk, Virginia 23510-2618 • USA
Phone 757-627-1118
Fax 757-627-1113
www.transystems.com

COMMONWEALTH OF VIRGINIA
Douglas K. Henderson
No. 022397
8/10/01
PROFESSIONAL ENGINEER
SEAL

APPROVED
ACTIVITY – SATISFACTORY TO
DATE
APPROVED
FOR EFD FOR COMMANDER NAVFAC
9/26/01
DATE

A/E		EFD
PFH	DESIGN	
KLB	DRAWN	
DKH	REVIEW	ETC
CTJ	QC	
RDF	CHIEF ARCH / ENGR.	

PROJECT MANAGER
FIRE PROTECTION
BRANCH MANAGER
DESIGN DIRECTOR

DEPARTMENT OF THE NAVY
NAVAL STATION
NAVAL FACILITIES ENGINEERING COMMAND
ATLANTIC DIVISION
NAVAL STATION
CHAMBERS FIELD, NORFOLK, VIRGINIA
NORFOLK, VIRGINIA
P-523
AIRCRAFT MAINTENANCE HANGAR
SECTION

CODE ID NO. 80091 | SIZE D
SCALE. AS NOTED
EFD NO.
STA. PROJ. NO. P-523
SPEC NO. 05-00-0101
CONSTR CONTR. NO
N62470-00-B-0101
NAVFAC DRAWING NO.
4450896
SHEET 209 OF 270

M-301

DRAWFORM REVISION MAY 2000

Bowman, Foster & Associates, P.C.
Consulting Engineers
Norfolk, VA 23502

NOTES

1. DUCT SIZES ARE IN MILLIMETERS (mm).
2. EQUIPMENT SCHEDULES ON SHEET M-601 AND M-602.
3. LEGEND AND ABBREVIATIONS ON SHEET M-001.

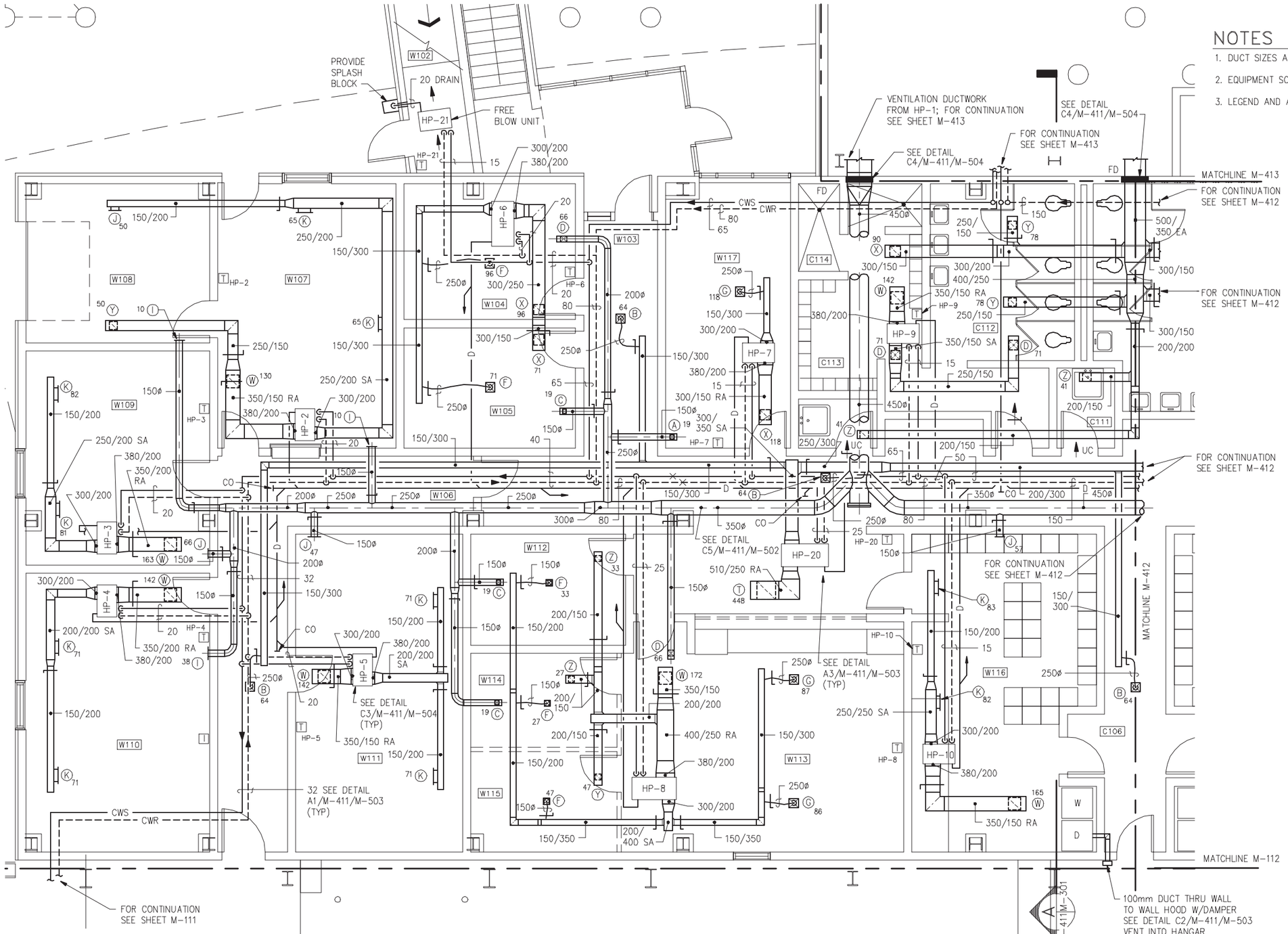

PARTIAL FIRST FLOOR PLAN – DUCTWORK/PIPING

SCALE: 1 : 50

NOTE: IF THIS DRAWING IS A REDUCTION, GRAPHIC SCALE MUST BE USED.

PLAN NORTH

M411

KEY PLAN

DIMENSIONS ARE MILLIMETERS.

0 500 1500 2500

1:50 GRAPHIC SCALE (mm)

MARK	DESCRIPTION	DATE	APPR.

GLENN & SADLER ENGINEERS & ARCHITECTS
a division of TRANSYSTEMS CORPORATION
Town Point Center
150 South Monroe St. Suite 1000
Norfolk, Virginia 23510-2808 USA
Phone 757-627-1118
Fax 757-627-1115
www.transystems.com

COMMONWEALTH OF VIRGINIA
Douglas K. Henderson
No. 022397
8/10/01
PROFESSIONAL ENGINEER
SEAL

APPROVED
ACTIVITY – SATISFACTORY TO
DATE
APPROVED
FOR EFD FOR COMMANDER NAVFAC
7/26/01
DATE

A/E		EFD
PEH	DESIGN	
KLB	DRAWN	
DKH	REVIEW	ETC
GJ	QC	
RDF	CHIEF ARCH / ENGR.	

PROJECT MANAGER
FIRE PROTECTION RDF
BRANCH MANAGER JTM
DESIGN DIRECTOR

DEPARTMENT OF THE NAVY
NAVAL FACILITIES ENGINEERING COMMAND
ATLANTIC DIVISION
NAVAL STATION CHAMBERS FIELD, NAVAL STATION NORFOLK, VIRGINIA
NORFOLK, VIRGINIA

AIRCRAFT MAINTENANCE HANGAR P-523

ENLARGED PARTIAL FIRST FLOOR PLAN – MECHANICAL

CODE ID NO. 80091 | SIZE D
SCALE. AS NOTED
EFD NO.
STA. PROJ NO. P-523
SPEC NO. 05-00-0101
CONSTR. CONTR. NO N62470-00-B-0101
NAVFAC DRAWING NO. 4450897
SHEET 210 OF 270

M-411

DRAWFORM REVISION MAY 2000

Bowman, Foster & Associates, P.C.
Consulting Engineers
Norfolk, VA 23502

NOTES

1. DUCT SIZES ARE IN MILLIMETERS (mm).
2. EQUIPMENT SCHEDULES ON SHEET M-601 AND M-602.
3. LEGEND AND ABBREVIATIONS ON SHEET M-001.

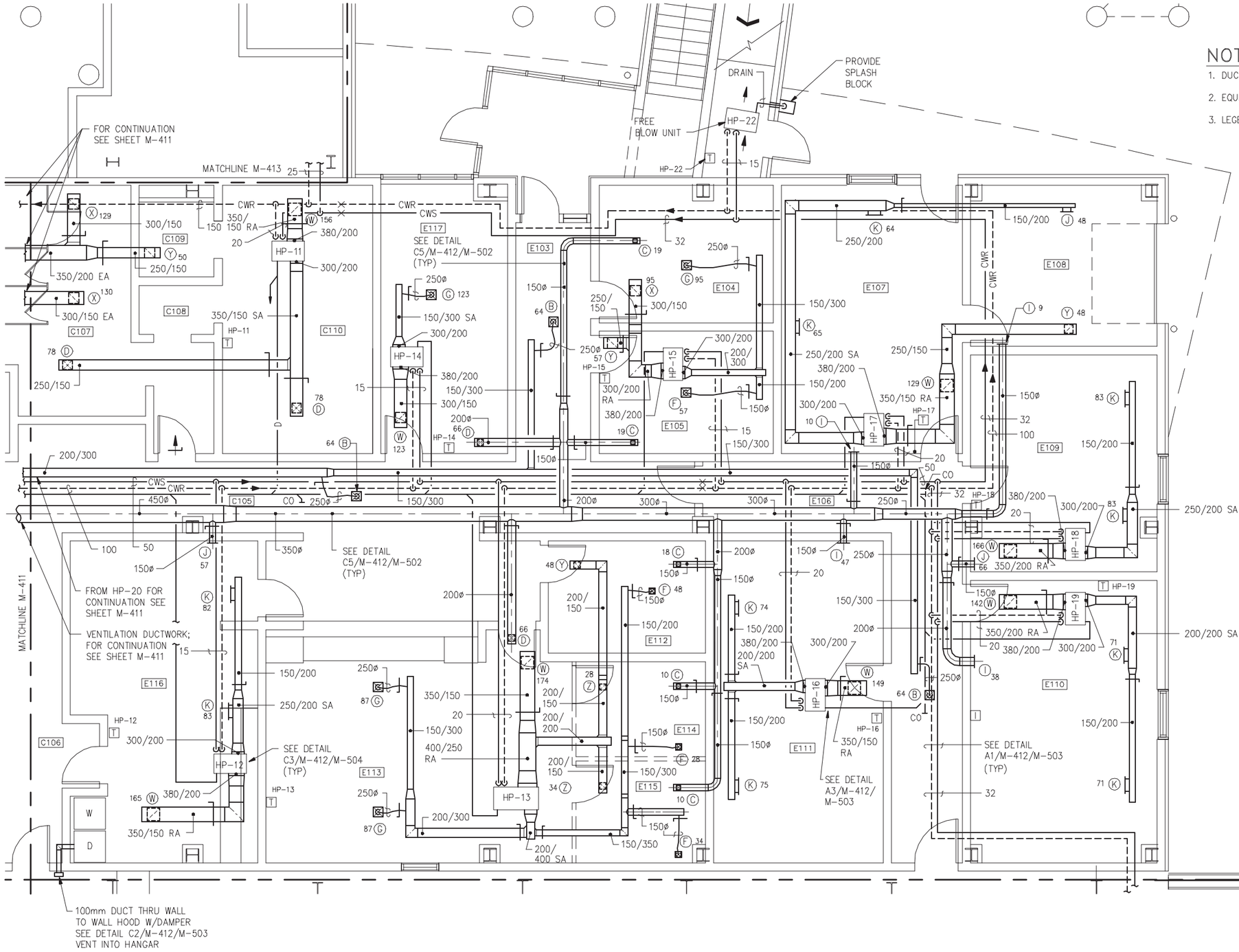

PLAN NORTH

KEY PLAN

DIMENSIONS ARE MILLIMETERS.

0 500 1500 2500

1:50 GRAPHIC SCALE (mm)

PARTIAL FIRST FLOOR PLAN – DUCTWORK/PIPING

SCALE: 1 : 50

NOTE: IF THIS DRAWING IS A REDUCTION, GRAPHIC SCALE MUST BE USED.

SYM.	DESCRIPTION	DATE	APPR.

GLENN & SADLER ENGINEERS & ARCHITECTS
a division of TRANSYSTEMS CORPORATION
Town Point Center
150 South Monroe Street, Suite 1800
Norfolk, Virginia 23510-1828 – USA
Phone 757-627-1118
Fax 757-627-1113
www.transystems.com

COMMONWEALTH OF VIRGINIA
Douglas K. Henderson
No. 022397
8/10/01
PROFESSIONAL ENGINEER
SEAL

APPROVED
ACTIVITY – SATISFACTORY TO
DATE
APPROVED
FOR EFD FOR COMMANDER NAVFAC
9/26/01
DATE

A/E		EFD
PFH	DESIGN	
KLB	DRAWN	
DKH	REVIEW	ETC
GTJ	QC	
RDF	CHIEF ARCH / ENGR.	

PROJECT MANAGER
FIRE PROTECTION
BRANCH MANAGER
DESIGN DIRECTOR

DEPARTMENT OF THE NAVY
NAVAL STATION
NAVAL FACILITIES ENGINEERING COMMAND
ATLANTIC DIVISION
NORFOLK, VIRGINIA
NAVAL STATION
CHAMBERS FIELD, NORFOLK, VIRGINIA
P-523
AIRCRAFT MAINTENANCE HANGAR
ENLARGED PARTIAL FIRST FLOOR PLAN – MECHANICA

CODE ID NO. 80091 | SIZE D
SCALE. AS NOTED
EFD NO.
STA. PROJ NO. P-523
SPEC NO. 05-00-0101
CONSTR CONTR. NO N62470-00-B-0101
NAVFAC DRAWING NO. 4450898
SHEET 211 OF 270

M-412

DRAWFORM REVISION MAY 2000

Bowman, Foster & Associates, P.C.
Consulting Engineers
Norfolk, VA 23502

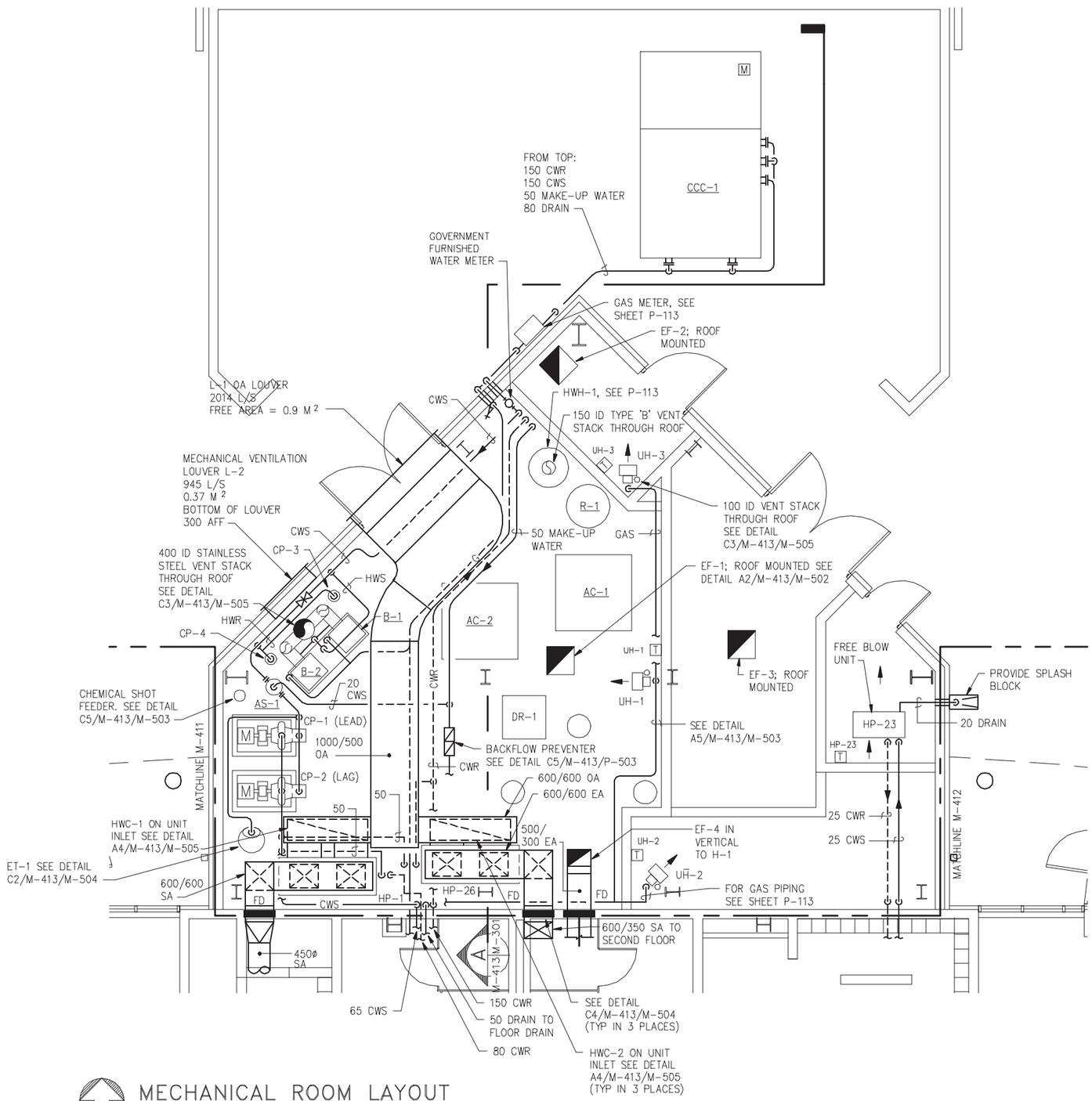

MECHANICAL ROOM LAYOUT

SCALE: 1 : 50

NOTES

1. DUCT SIZES ARE IN MILLIMETERS (mm).
2. EQUIPMENT SCHEDULES ON SHEET M-601 AND M-602.
3. LEGEND AND ABBREVIATIONS ON SHEET M-001.
4. SEE DETAIL C2/M-413/M-505 AND C5/M-413/M-505 FOR BOILER PIPING.
5. SEE DETAIL C3/M-413/M-503 FOR PUMP PIPING.

NOTE: IF THIS DRAWING IS A REDUCTION, GRAPHIC SCALE MUST BE USED.

PLAN NORTH

M413

KEY PLAN

DIMENSIONS ARE MILLIMETERS.

0 500 1500 2500

1:50 GRAPHIC SCALE (mm)

SYM.	DESCRIPTION	DATE	APPR.

GLENN & SADLER
ENGINEERS & ARCHITECTS
a division of
TRANSYSTEMS CORPORATION
Town Point Center
150 South Monroe Street, Suite 1600
Norfolk, Virginia 23510-2808 - USA
Phone 757-627-1118
Fax 757-627-1115
www.transystems.com

COMMONWEALTH OF VIRGINIA
Douglas K. Henderson
No. 022397
8/10/01
PROFESSIONAL ENGINEER
SEAL

APPROVED
ACTIVITY – SATISFACTORY TO
DATE
APPROVED
FOR EFD FOR COMMANDER NAVFAC
9/26/01
DATE

A/E		EFD
PEH	DESIGN	
KLB	DRAWN	
DKH	REVIEW	ETC
GTJ	QC	
RDF	CHIEF ARCH / ENGR.	

PROJECT MANAGER
FIRE PROTECTION
BRANCH MANAGER
DESIGN DIRECTOR

DEPARTMENT OF THE NAVY
NAVAL FACILITIES ENGINEERING COMMAND
NAVAL STATION
ATLANTIC DIVISION
CHAMBERS FIELD, NAVAL STATION
NORFOLK, VIRGINIA
NORFOLK, VIRGINIA
AIRCRAFT MAINTENANCE HANGAR
P-523
ENLARGED MECHANICAL ROOM LAYOUT

CODE ID NO. 80091 | SIZE D
SCALE. AS NOTED
EFD NO.
STA. PROJ NO. P-523
SPEC NO. 05-00-0101
CONSTR CONTR. NO N62470-00-B-0101
NAVFAC DRAWING NO. 4450899
SHEET 212 OF 270

M-413

DRAWFORM REVISION MAY 2000

Bowman, Foster & Associates, P.C.
Consulting Engineers
Norfolk, VA 23502

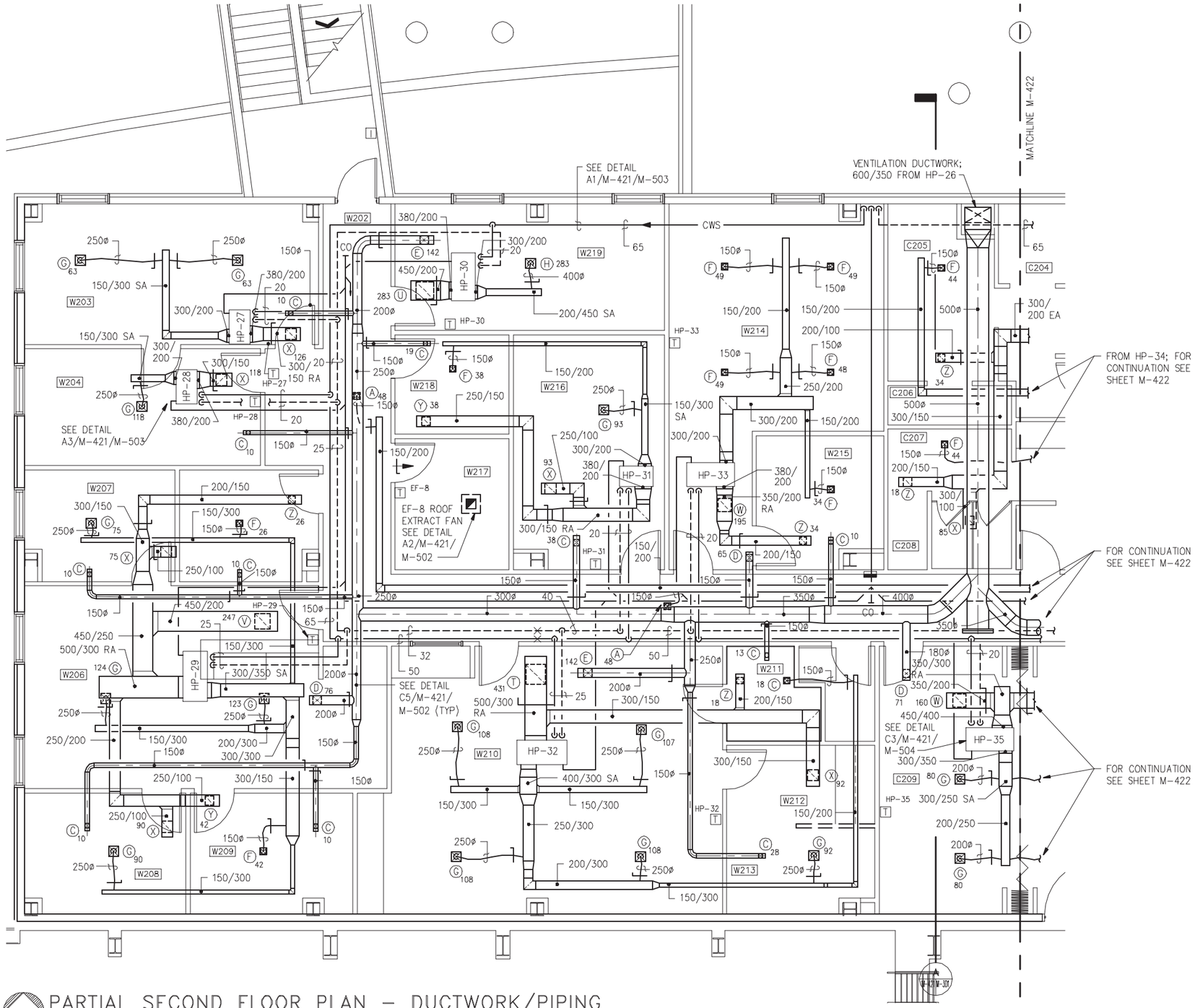

NOTES

1. DUCT SIZES ARE IN MILLIMETERS (mm).
2. EQUIPMENT SCHEDULES ON SHEET M-601 AND M-602.
3. LEGEND AND ABBREVIATIONS ON SHEET M-001.

PARTIAL SECOND FLOOR PLAN – DUCTWORK/PIPING

SCALE: 1 : 50

NOTE: IF THIS DRAWING IS A REDUCTION, GRAPHIC SCALE MUST BE USED.

PLAN NORTH

M421

KEY PLAN

DIMENSIONS ARE MILLIMETERS.

0 500 1500 2500

1:50 GRAPHIC SCALE (mm)

SYM.	DESCRIPTION	DATE	APPR.

GLENN & SADLER ENGINEERS & ARCHITECTS
a division of TRANSYSTEMS CORPORATION
Town Point Center
150 Boush Street, Suite 1000
Norfolk, Virginia 23510-1626
Phone 757-627-1112
Fax 757-627-1113
www.transystems.com

COMMONWEALTH OF VIRGINIA
Douglas K. Henderson
No. 022397
8/10/01
PROFESSIONAL ENGINEER
SEAL

APPROVED
ACTIVITY – SATISFACTORY TO
DATE
APPROVED
FOR EFD FOR COMMANDER NAVFAC
9/26/01
DATE

A/E		EFD
PEH	DESIGN	
KLB	DRAWN	
DKH	REVIEW	ETC
GTJ	QC	
RDF	CHIEF ARCH / ENGR.	
	PROJECT MANAGER	
	FIRE PROTECTION	
	BRANCH MANAGER	JTM
	DESIGN DIRECTOR	

DEPARTMENT OF THE NAVY
NAVAL STATION
NAVAL FACILITIES ENGINEERING COMMAND
ATLANTIC DIVISION
NORFOLK, VIRGINIA
CHAMBERS FIELD, NAVAL STATION
NORFOLK, VIRGINIA
P-523
AIRCRAFT MAINTENANCE HANGAR
ENLARGED PARTIAL SECOND FLOOR PLAN – MECHANICAL

CODE ID NO. 80091 | SIZE D
SCALE. AS NOTED
EFD NO.
STA PROJ NO. P-523
SPEC NO. 05-00-0101
CONSTR. CONTR. NO N62470-00-B-0101
NAVFAC DRAWING NO. 4450900
SHEET 213 OF 270

M-421

DRAWFORM REVISION MAY 2000

Bowman, Foster & Associates, P.C.
Consulting Engineers
Norfolk, VA 23502

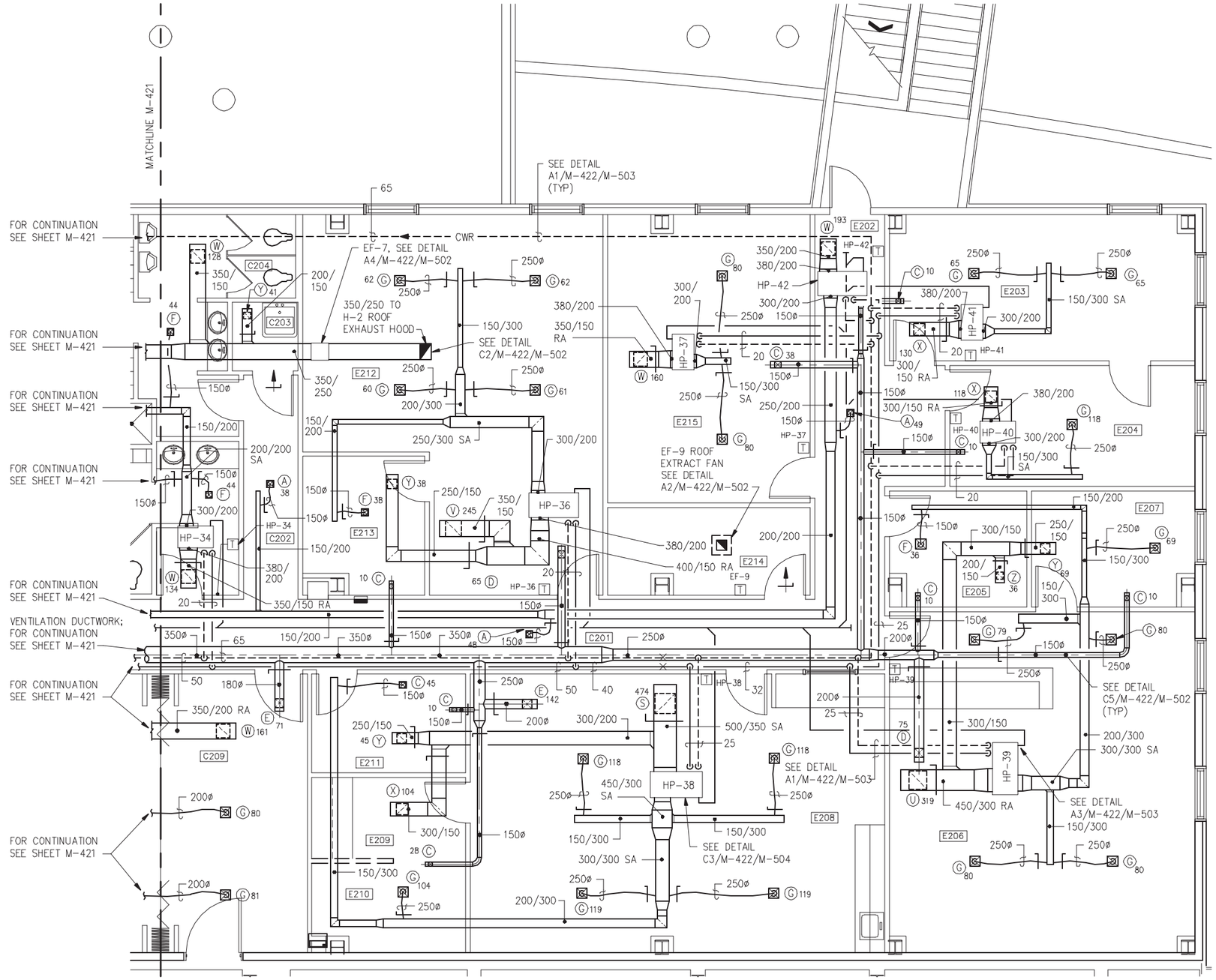

PARTIAL SECOND FLOOR PLAN – DUCTWORK/PIPING

SCALE: 1 : 50

NOTES

1. DUCT SIZES ARE IN MILLIMETERS (mm).
2. EQUIPMENT SCHEDULES ON SHEET M-601 AND M-602.
3. LEGEND AND ABBREVIATIONS ON SHEET M-001.

PLAN NORTH

M422

KEY PLAN

DIMENSIONS ARE MILLIMETERS.

0 500 1500 2500

1:50 GRAPHIC SCALE (mm)

NOTE: IF THIS DRAWING IS A REDUCTION, GRAPHIC SCALE MUST BE USED.

SYM.	DESCRIPTION	DATE	APPR.

GLENN & SADLER ENGINEERS & ARCHITECTS
a division of TRANSYSTEMS CORPORATION
Town Point Center
150 South Monroe St. • Suite 1000
Norfolk, Virginia • USA
23510-2526
Phone 757-627-1112
Fax 757-627-1113
www.transystems.com

COMMONWEALTH OF VIRGINIA
Douglas K. Henderson
No. 022397
8/10/01
PROFESSIONAL ENGINEER
SEAL

APPROVED
ACTIVITY – SATISFACTORY TO
DATE
APPROVED
FOR EFD FOR COMMANDER NAVFAC
9/26/01
DATE

A/E		EFD
PFH	DESIGN	
KLB	DRAWN	
DKH	REVIEW	ETC
GTJ	QC	
RDF	CHIEF ARCH / ENGR.	

PROJECT MANAGER
FIRE PROTECTION
BRANCH MANAGER
DESIGN DIRECTOR

DEPARTMENT OF THE NAVY
NAVAL FACILITIES ENGINEERING COMMAND
ATLANTIC DIVISION
NAVAL STATION CHAMBERS FIELD, NAVAL STATION NORFOLK, VIRGINIA
NORFOLK, VIRGINIA

AIRCRAFT MAINTENANCE HANGAR P-523

ENLARGED PARTIAL SECOND FLOOR PLAN – MECHANICAL

CODE ID NO. 80091 | SIZE D
SCALE. AS NOTED
EFD NO.
STA PROJ NO. P-523
SPEC NO. 05-00-0101
CONSTR. CONTR. NO N62470-00-B-0101
NAVFAC DRAWING NO. 4450901
SHEET 214 OF 270

M-422

DRAWFORM REVISION MAY 2000

Bowman, Foster & Associates, P.C.
Consulting Engineers
Norfolk, VA 23502

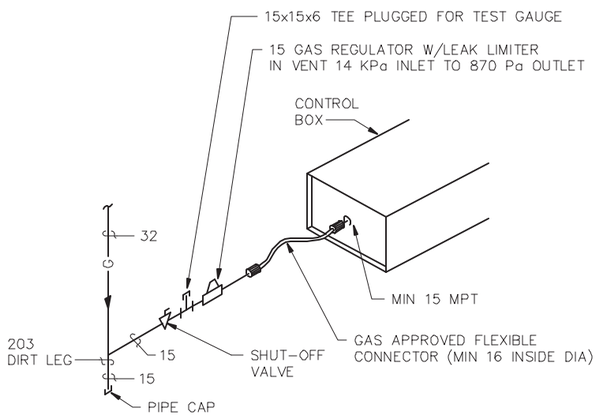

INFRARED TUBE HEATER GAS CONNECTION DETAIL (C2)

NO SCALE — P-111, P-112, M-111, M-112 | M-501

NOTE: INFRARED TUBE HEATERS MUST BE INSTALLED PRIOR TO INSTALLATION OF GAS PIPING. CONNECTION TO EACH HEATER MUST BE INSTALLED IN ACCORDANCE WITH MANUFACTURERS INSTRUCTIONS.

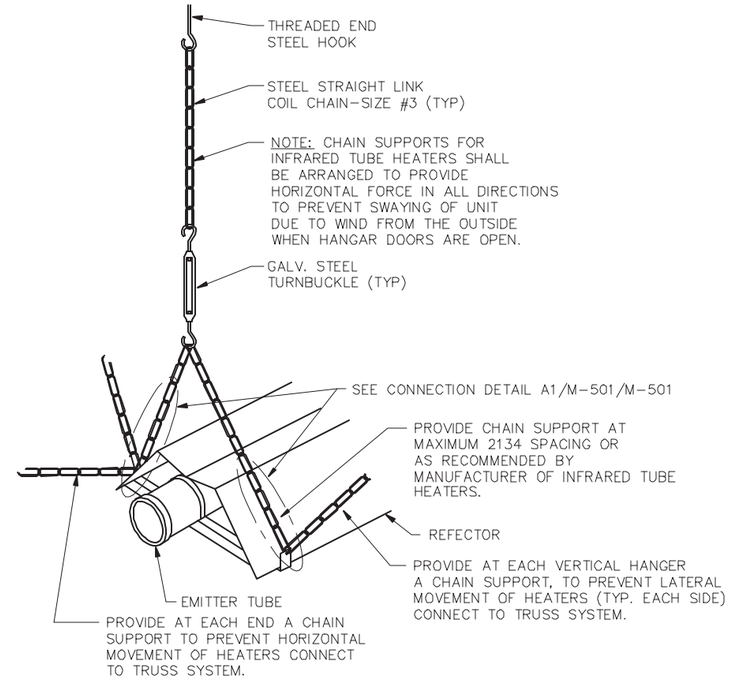

INFRARED TUBE HEATER SUPPORT DETAIL (C4)

NO SCALE — M-111, M-112 | M-501

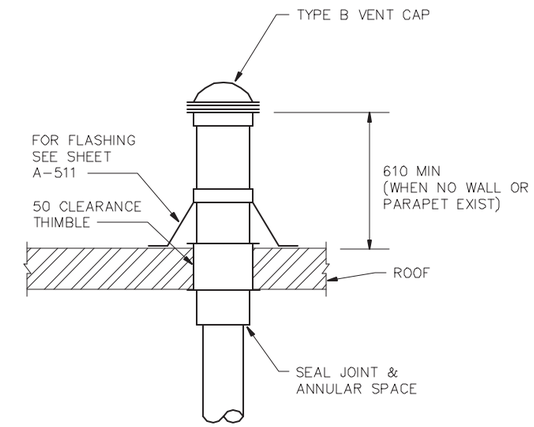

VENT THRU ROOF DETAIL (C5)

NO SCALE — M-111, M-112 | M-501

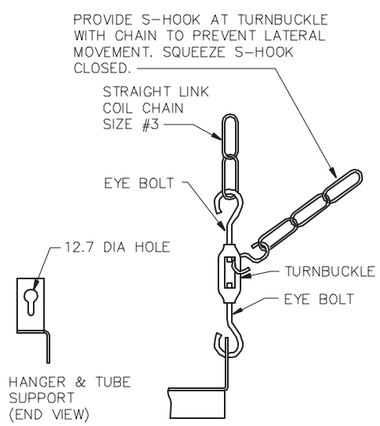

CONNECTION DETAIL (A1)

NO SCALE — M-501 | M-501

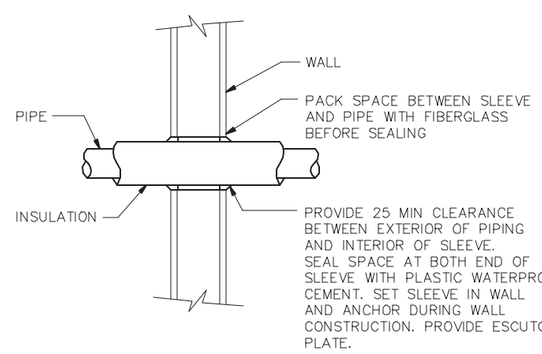

PIPE SLEEVE DETAIL (A3)

NO SCALE — M-701, M-702, M-703 | M-501

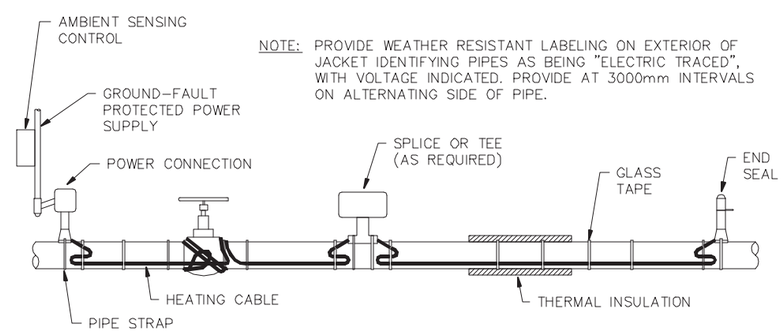

SELF-REGULATING HEATING CABLE SYSTEM DETAIL (A5)

NO SCALE — M-703 | M-501

NOTES:

1. DIMENSIONS ARE IN MILLIMETERS UNLESS NOTED OTHERWISE.
2. LEGEND & ABBREVIATIONS ON SHEET M-001.

SYM.	DESCRIPTION	DATE	APPR.

GLENN & SADLER ENGINEERS & ARCHITECTS
a division of RMS SYSTEMS CORPORATION
Town Point Center, 150 South Monroe St., Suite 1000, Norfolk, Virginia 23510-2808, USA, Phone 757-627-1118, Fax 757-627-1113, www.rms-systems.com

COMMONWEALTH OF VIRGINIA — Douglas K. Henderson — No. 022387 — 8/10/01 — PROFESSIONAL ENGINEER — SEAL

APPROVED
ACTIVITY – SATISFACTORY TO
DATE
APPROVED
FOR EFD FOR COMMANDER NAVFAC
9/26/01
DATE

A/E		EFD
PEH	DESIGN	
KLB	DRAWN	
DKH	REVIEW	ETC
GTJ	QC	
RDF	CHIEF ARCH / ENGR.	

PROJECT MANAGER
FIRE PROTECTION
BRANCH MANAGER
DESIGN DIRECTOR

DEPARTMENT OF THE NAVY — NAVAL FACILITIES ENGINEERING COMMAND — ATLANTIC DIVISION — NORFOLK, VIRGINIA
NAVAL STATION CHAMBERS FIELD, NAVAL STATION NORFOLK, VIRGINIA
AIRCRAFT MAINTENANCE HANGAR P-523
DETAILS

CODE ID NO. 80091 — SIZE D
SCALE. AS NOTED
EFD NO.
STA. PROJ NO. P-523
SPEC NO. 05-00-0101
CONSTR. CONTR. NO. N62470-00-B-0101
NAVFAC DRAWING NO. 4450902
SHEET 215 OF 270
M-501
DRAWFORM REVISION MAY 2000

Bowman, Foster & Associates, P.C.
Consulting Engineers
Norfolk, VA 23502

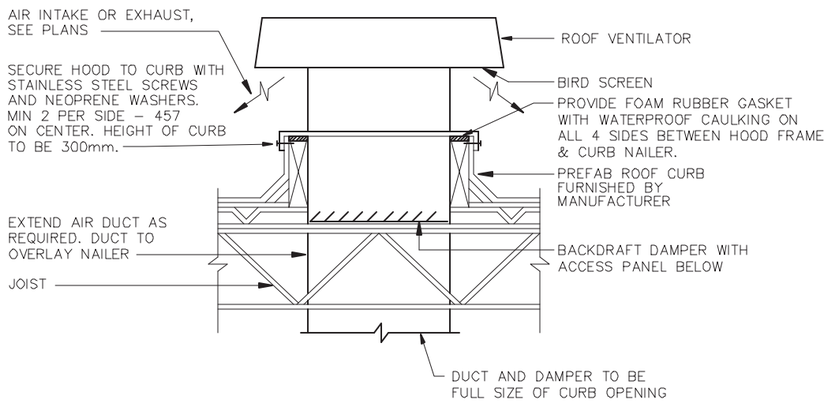

GRAVITY ROOF HOOD INSTALLATION DETAIL

NO SCALE

C2 — M-422 | M-502

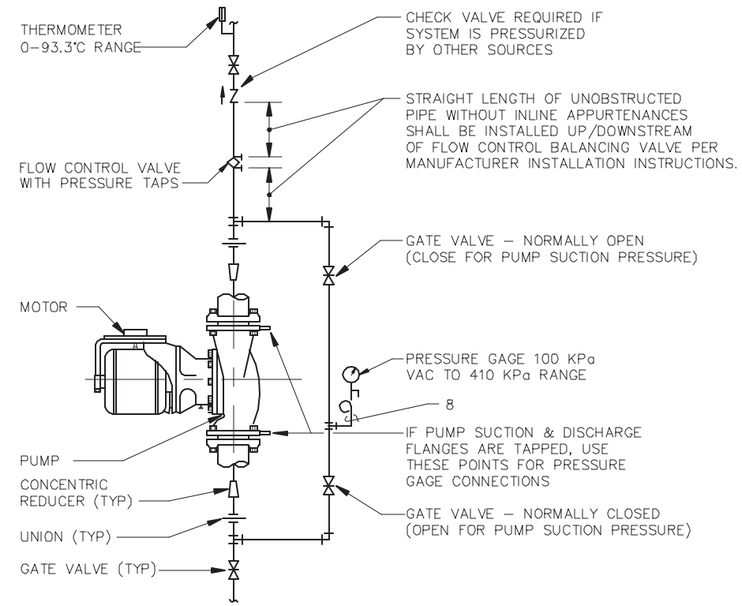

INLINE CENTRIFUGAL PUMP

NO SCALE

C4 — M-505 | M-502

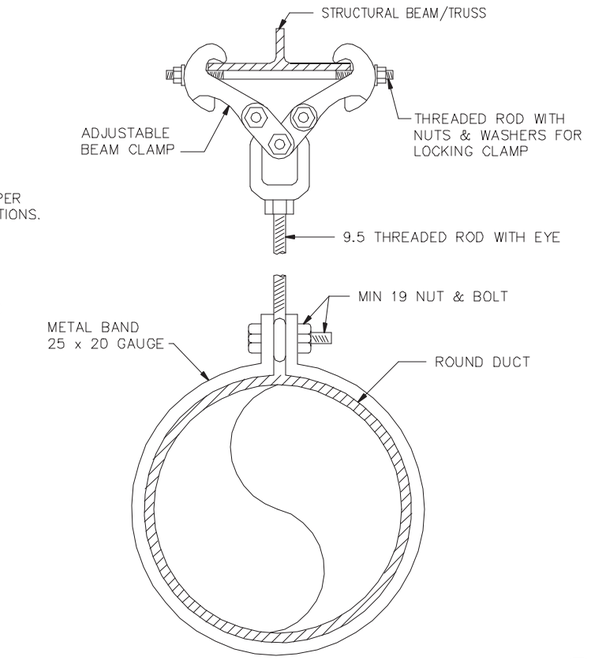

ROUND DUCT SUPPORT – DETAIL

NO SCALE

C5 — M-111, M-112, M-411, M-412, M-421, M-422 | M-502

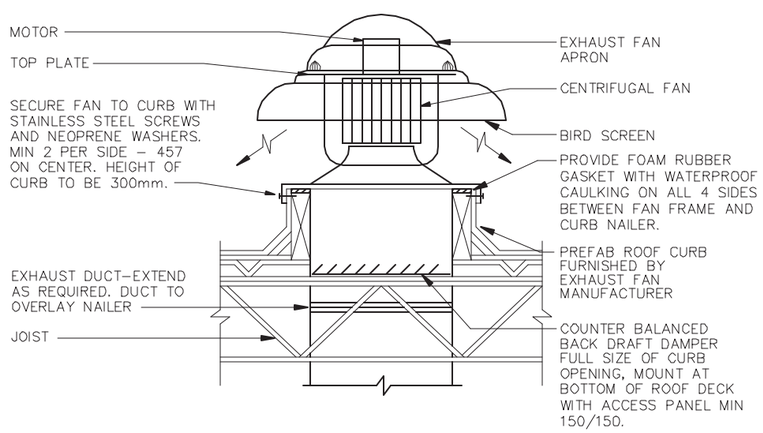

EXHAUST FAN DETAIL

NO SCALE

A2 — M-413, M-421, M-422 | M-502

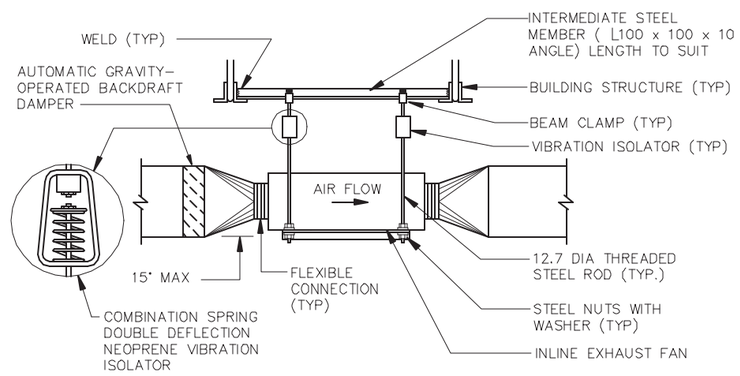

INLINE EXHAUST FAN MOUNTING DETAIL

NO SCALE

A4 — M-111, M-112, M-422 | M-502

NOTES:

1. DIMENSIONS ARE IN MILLIMETERS UNLESS NOTED OTHERWISE.
2. LEGEND & ABBREVIATIONS ON SHEET M-001.

SYM.	DESCRIPTION	DATE	APPR.

GLENN & SADLER ENGINEERS & ARCHITECTS
a division of TRANSYSTEMS CORPORATION
Town Point Center, 150 South Monroe St., Suite 1600, Norfolk, Virginia 23510-2808 USA
Phone 757-627-1118, Fax 757-627-1113, www.transystems.com

COMMONWEALTH OF VIRGINIA — Douglas K. Henderson — No. 022387 — 8/10/01 — PROFESSIONAL ENGINEER — SEAL

APPROVED
ACTIVITY – SATISFACTORY TO
DATE
APPROVED
FOR EFD FOR COMMANDER NAVFAC
9/26/01
DATE

A/E		EFD
PEH	DESIGN	
KLB	DRAWN	
DKH	REVIEW	ETC
GTJ	QC	
RDF	CHIEF ARCH / ENGR.	

PROJECT MANAGER
FIRE PROTECTION — DRF
BRANCH MANAGER — JFM
DESIGN DIRECTOR — RDF

DEPARTMENT OF THE NAVY — NAVAL FACILITIES ENGINEERING COMMAND — ATLANTIC DIVISION — NORFOLK, VIRGINIA
NAVAL STATION — CHAMBERS FIELD, NAVAL STATION — NORFOLK, VIRGINIA
P-523 AIRCRAFT MAINTENANCE HANGAR
DETAILS

CODE ID NO. 80091 | SIZE D
SCALE. AS NOTED
EFD NO.
STA. PROJ NO. P-523
SPEC NO. 05-00-0101
CONSTR. CONTR. NO N62470-00-B-0101
NAVFAC DRAWING NO. 4450903
SHEET 216 OF 270
M-502
DRAWFORM REVISION MAY 2000

Bowman, Foster & Associates, P.C.
Consulting Engineers
Norfolk, VA 23502

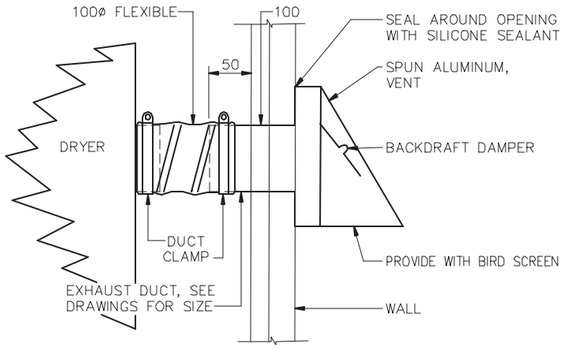

DRYER WALL CAP DETAIL (C2)

NO SCALE — M-411, M-412 | M-503

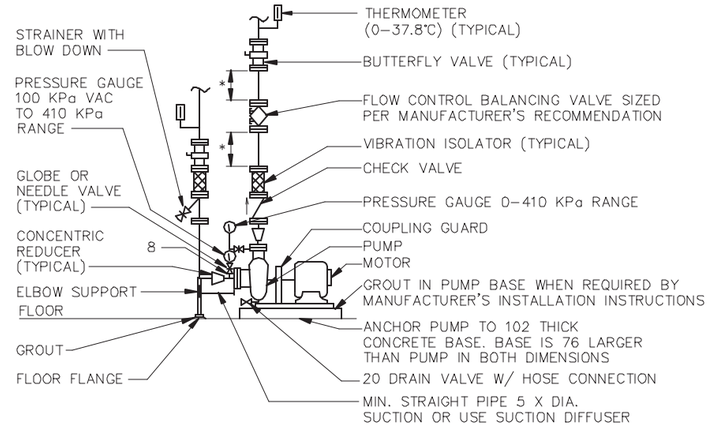

* STRAIGHT LENGTHS OF UNOBSTRUCTED PIPE WITHOUT INLINE APPURTENANCES SHALL BE INSTALLED UP/DOWN STREAM OF FLOW CONTROL BALANCING VALVE PER MFG.'S INSTALLATION INSTRUCTIONS

BASE MOUNTED CENTRIFUGAL PUMP (C3)

NO SCALE — M-413, M-505, M-703 | M-503

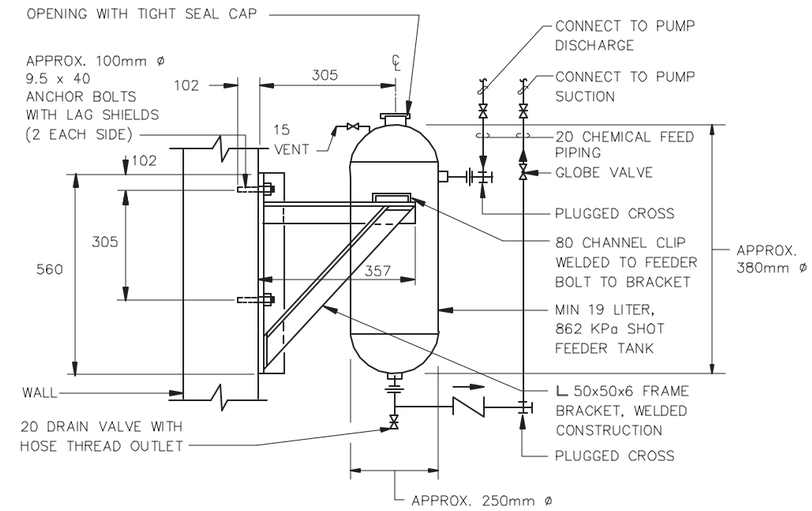

CHEMICAL SHOT FEEDER DETAIL (C5)

NO SCALE — M-413, M-703 | M-503

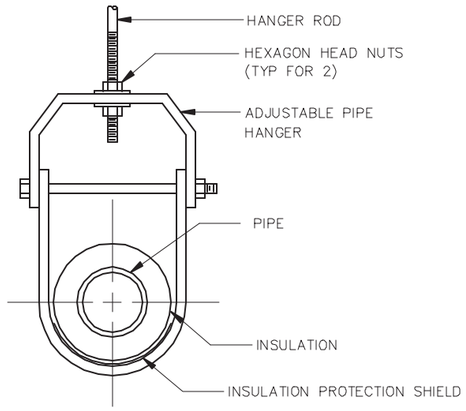

PIPE HANGER DETAIL (A1)

NO SCALE — M-411, M-412, M-421, M-422 | M-503

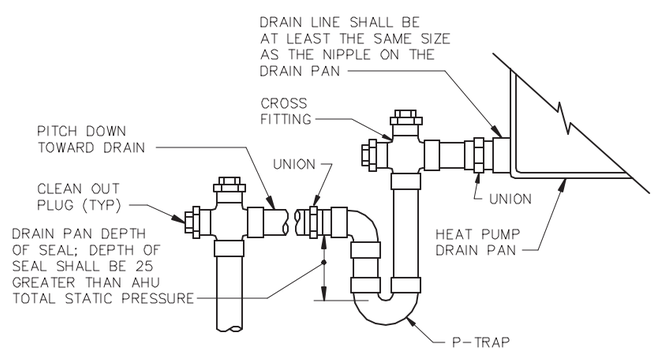

TYPICAL CONDENSATE DRAIN TRAP DETAIL (A3)

NO SCALE — M-411, M-412, M-421, M-422, M-504, M-702 | M-503

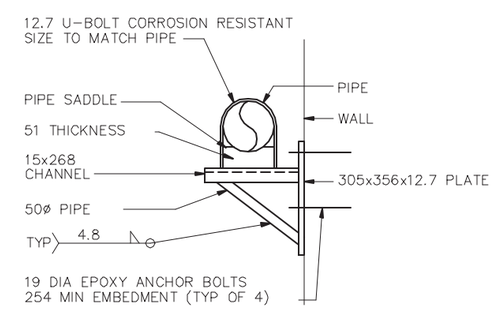

PIPE SUPPORT (A5)

NO SCALE — M-413 | M-503

NOTES:

1. DIMENSIONS ARE IN MILLIMETERS UNLESS NOTED OTHERWISE.
2. LEGEND & ABBREVIATIONS ON SHEET M-001.

APPR	DATE	DESCRIPTION	SYM.

GLENN & SADLER ENGINEERS & ARCHITECTS
a division of TRANSYSTEMS CORPORATION
Town Point Center, 150 South Monroe St., Suite 1000, Norfolk, Virginia 23510-1626 USA
Phone 757-627-1118, Fax 757-627-1115, www.transystems.com

COMMONWEALTH OF VIRGINIA — Douglas K. Henderson — No. 022387 — 8/10/01 — PROFESSIONAL ENGINEER — SEAL

APPROVED
ACTIVITY – SATISFACTORY TO
DATE
APPROVED
FOR EFD FOR COMMANDER NAVFAC
9/26/01
DATE

A/E		EFD
PEH	DESIGN	
KLB	DRAWN	
DKH	REVIEW	ETC
GTJ	QC	
RDF	CHIEF ARCH / ENGR.	

PROJECT MANAGER
FIRE PROTECTION — RDF
BRANCH MANAGER — JTM
DESIGN DIRECTOR — RDF

DEPARTMENT OF THE NAVY — NAVAL FACILITIES ENGINEERING COMMAND — ATLANTIC DIVISION — NAVAL STATION NORFOLK, VIRGINIA
NAVAL STATION CHAMBERS FIELD, NORFOLK, VIRGINIA
P-523
AIRCRAFT MAINTENANCE HANGAR
DETAILS

CODE ID NO. 80091 — SIZE D
SCALE. AS NOTED
EFD NO.
STA. PROJ NO. P-523
SPEC NO. 05-00-0101
CONSTR. CONTR. NO N62470-00-B-0101
NAVFAC DRAWING NO. 4450904
SHEET 217 OF 270

M-503

DRAWFORM REVISION MAY 2000

Bowman, Foster & Associates, P.C.
Consulting Engineers
Norfolk, VA 23502

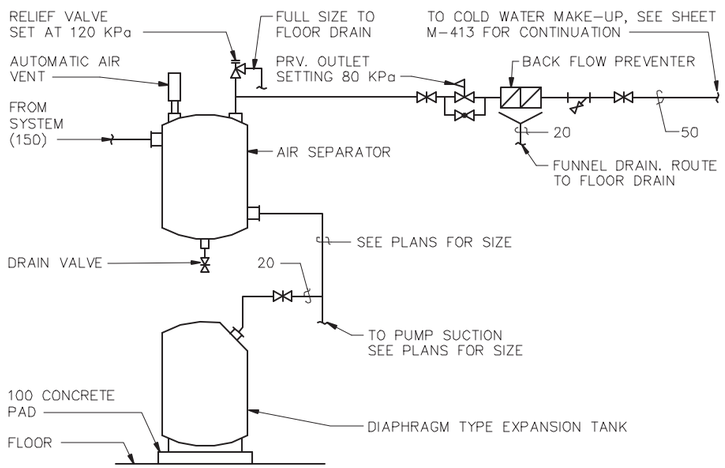

EXPANSION TANK/AIR SEPARATOR DETAIL (C2)

NO SCALE

M-413, M-703 | M-504

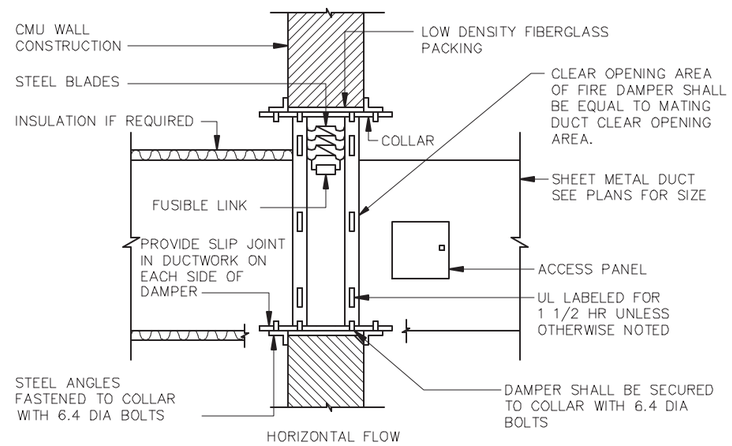

FIRE DAMPER DETAIL – WALL (C4)

NO SCALE

M-411, M-413 | M-504

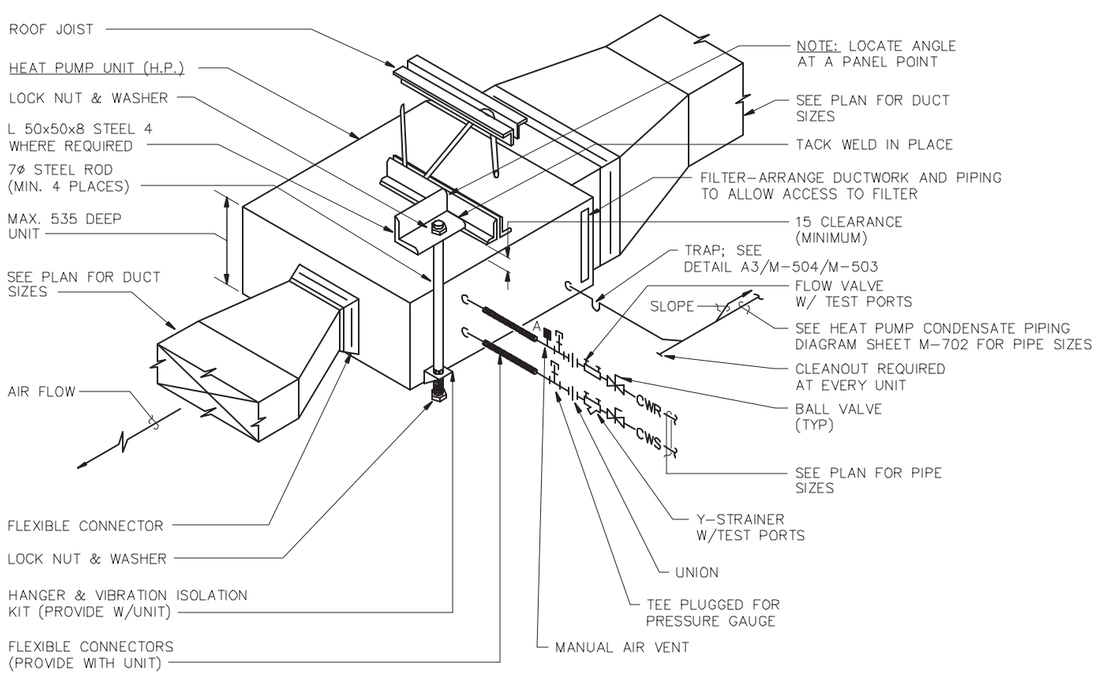

INSTALLATION DETAIL FOR HORIZONTAL HEAT PUMP UNIT (C3)

NO SCALE

M-411, M-412, M-421, M-422, M-701 | M-504

NOTES:

1. DIMENSIONS ARE IN MILLIMETERS UNLESS NOTED OTHERWISE.
2. LEGEND & ABBREVIATIONS ON SHEET M-001.

SYM.	DESCRIPTION	DATE	APPR.

GLENN & SADLER ENGINEERS & ARCHITECTS
a division of TRANSYSTEMS CORPORATION
Town Point Center
150 South Monroe Street, Suite 1000
Norfolk, Virginia 23510-1626 USA
Phone 757-627-1118
Fax 757-627-1115
www.transystems.com

COMMONWEALTH OF VIRGINIA
Douglas K. Henderson
No. 022397
8/10/01
PROFESSIONAL ENGINEER
SEAL

APPROVED
ACTIVITY – SATISFACTORY TO
DATE
APPROVED
FOR EFD FOR COMMANDER NAVFAC
9/26/01
DATE

A/E		EFD
PEH	DESIGN	
KLB	DRAWN	
DKH	REVIEW	ETC
GTJ	QC	
RDF	CHIEF ARCH / ENGR.	

PROJECT MANAGER
FIRE PROTECTION DRF
BRANCH MANAGER JTM
DESIGN DIRECTOR JPG

DEPARTMENT OF THE NAVY
NAVAL FACILITIES ENGINEERING COMMAND
ATLANTIC DIVISION
NAVAL STATION NORFOLK, VIRGINIA
NAVAL STATION CHAMBERS FIELD, NORFOLK, VIRGINIA
P-523
AIRCRAFT MAINTENANCE HANGAR
DETAILS

CODE ID NO. 80091 | SIZE D
SCALE. AS NOTED
EFD NO.
STA. PROJ NO. P-523
SPEC NO. 05-00-0101
CONSTR. CONTR. NO
N62470-00-B-0101
NAVFAC DRAWING NO.
4450905
SHEET 218 OF 270
M-504

DRAWFORM REVISION MAY 2000

Bowman, Foster & Associates, P.C.
Consulting Engineers
Norfolk, VA 23502

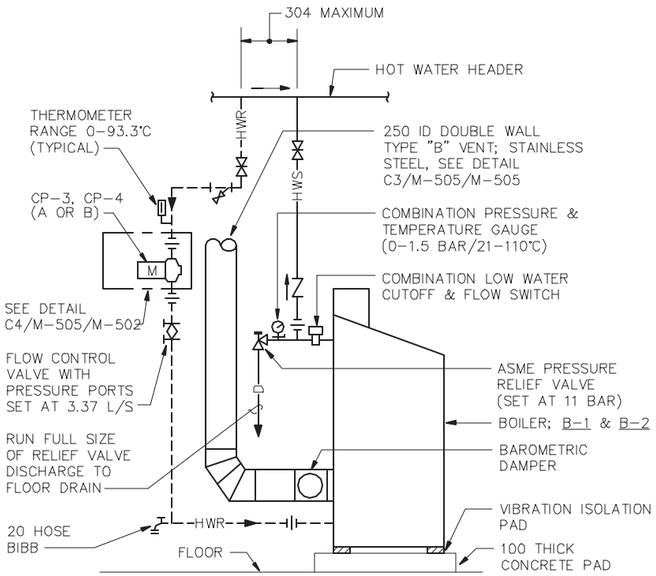

BOILER PIPING DETAIL (C2)

NO SCALE — M-413, M-703 M-505

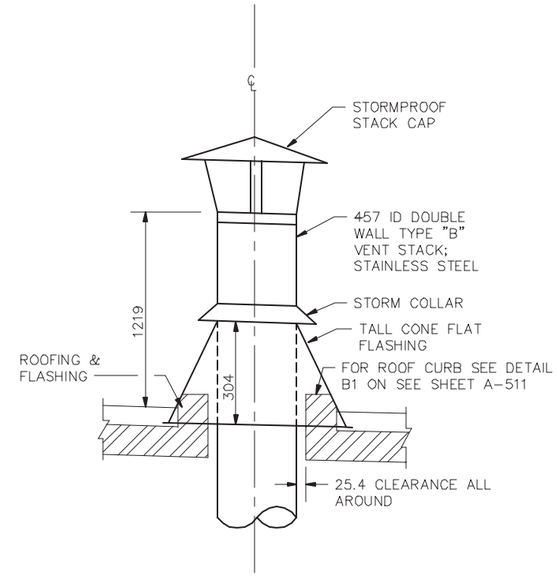

BOILERS/HEATER STACK DETAIL (C3)

NO SCALE — M-413, M-505 M-505

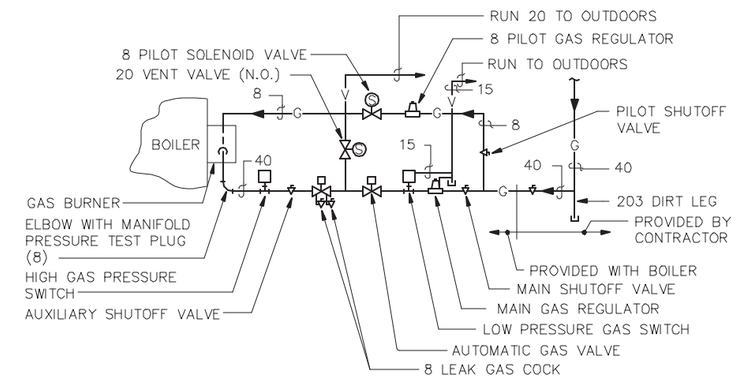

BOILER B-1 AND B-2 GAS TRAIN PIPING DETAIL (C5)

NO SCALE (TO BE FURNISHED WITH EACH BOILER) — M-413, M-703 M-505

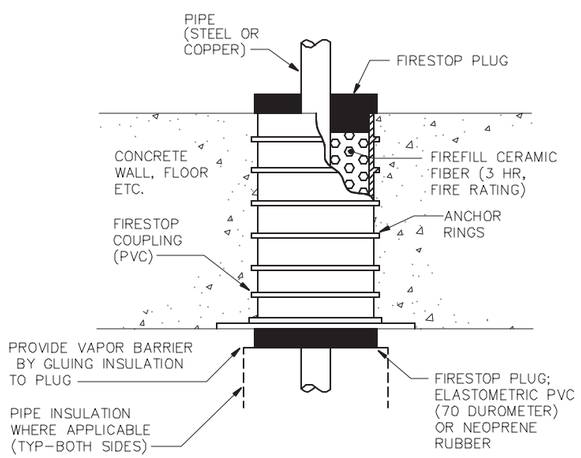

PIPE PENETRATION DETAIL (A2)

NO SCALE — M-701, M-702 M-505

NOTE: WHERE COILS ARE SPLIT INTO (2) OR MORE SECTIONS, EACH SECTION SHALL BE PIPED SEPARATELY

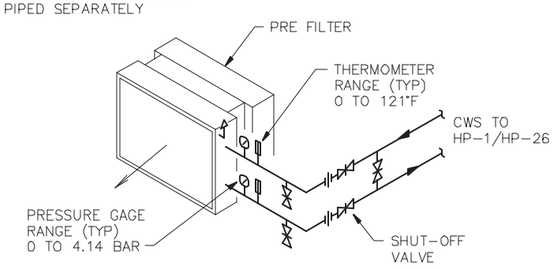

HOT WATER HEATING COIL PIPING DETAIL (A4)

NO SCALE — M-301, M-413 M-505

NOTES:

1. DIMENSIONS ARE IN MILLIMETERS UNLESS NOTED OTHERWISE.
2. LEGEND & ABBREVIATIONS ON SHEET M-001.

SYM.	DESCRIPTION	DATE	APPR.

GLENN & SADLER ENGINEERS & ARCHITECTS
a division of TRANSYSTEMS CORPORATION
Town Point Center, 150 South Monroe St., Suite 1000, Norfolk, Virginia 23510-2618
Phone 757-627-1118, Fax 757-627-1115, www.transystems.com

COMMONWEALTH OF VIRGINIA — Douglas K. Henderson — No. 022387 — 8/10/01 — PROFESSIONAL ENGINEER — SEAL

APPROVED
ACTIVITY – SATISFACTORY TO
DATE
APPROVED
FOR EFD FOR COMMANDER NAVFAC
9/26/01
DATE

A/E		EFD
PEH	DESIGN	
KLB	DRAWN	
DKH	REVIEW	ETC
GTJ	QC	
RDF	CHIEF ARCH / ENGR.	

PROJECT MANAGER
FIRE PROTECTION
BRANCH MANAGER
DESIGN DIRECTOR

DEPARTMENT OF THE NAVY — NAVAL FACILITIES ENGINEERING COMMAND, NORFOLK, VIRGINIA
NAVAL STATION — ATLANTIC DIVISION
CHAMBERS FIELD, NAVAL STATION, NORFOLK, VIRGINIA
P-523
AIRCRAFT MAINTENANCE HANGAR
DETAILS

CODE ID NO. 80091 — SIZE D
SCALE. AS NOTED
EFD NO.
STA. PROJ NO. P-523
SPEC NO. 05-00-0101
CONSTR. CONTR. NO N62470-00-B-0101
NAVFAC DRAWING NO. 4450906
SHEET 219 OF 270

M-505

DRAWFORM REVISION MAY 2000

Bowman, Foster & Associates, P.C.
Consulting Engineers
Norfolk, VA 23502

HVAC DESIGN CONDITIONS

CONDITIONED AREA	INDOORS SUMMER °CDB	INDOORS SUMMER %RH	INDOORS WINTER °CDB	OUTDOORS SUMMER °CDB	OUTDOORS SUMMER MEAN COINCIDENT °CWB	OUTDOORS WINTER °CDB
ADMIN/OFFICES	23.8	50	20	32.7	24.4	−5.6
HANGAR BAY		–	20	–	–	−5.6
STORAGE	–	–	12.78	–	–	−5.6

AIR SEPARATOR/EXPANSION TANK SCHEDULE

AIR SEPARATOR MARK	FLOW RATE (M^3/HR)	PIPE SIZE (mm)	PRESSURE DROP (kPa)	EXPANSION TANK MARK	ACCEPTANCE VOLUME (LITERS)	TANK VOLUME (LITERS)	MAX TEMP (°C)	MIN TEMP (°C)	FULL PRESSURE (kPa)
AS−1	159	150	5.73	ET−1	128.7	340.7	35	10	40

CIRCULATING PUMP SCHEDULE

MARK	TYPE	WATER FLOW L/S	HEAD kPa	MOTOR kW/HP	MOTOR VOLTS	MOTOR PH	RPM	EFFICIENCY	MOTOR STARTER SIZE	MOTOR STARTER TYPE	REMARKS
CP−1	CENTRIFUGAL BASE MOUNTED	17.5	215	7.5/10	480	3	1750	83.6	1	AUTO	
CP−2	CENTRIFUGAL BASE MOUNTED	17.5	215	7.5/10	480	3	1750	83.6	1	AUTO	
CP−3	CENTRIFUGAL IN−LINE	4.85	60	0.56/0.75	480	3	1750	61.8	00	AUTO	
CP−4	CENTRIFUGAL IN−LINE	4.85	60	0.56/0.75	480	3	1750	61.8	00	AUTO	

GRILLE, REGISTER & DIFFUSER SCHEDULE

MARK	NECK SIZE	SERVICE	APD Pa	REMARKS
A	150/150	2−WAY SUPPLY	15	NOTE 2
B	225/225	2−WAY SUPPLY	15	NOTE 2
C	150/150	3−WAY SUPPLY	15	NOTE 2
D	225/225	3−WAY SUPPLY	15	NOTE 2
E	300/300	3−WAY SUPPLY	15	NOTE 2
F	150/150	4−WAY SUPPLY	15	NOTE 2
G	225/225	4−WAY SUPPLY	15	NOTE 2
H	380/380	4−WAY SUPPLY	15	NOTE 2
I	200/100	SUPPLY REGISTER	15	NOTE 3
J	200/150	SUPPLY REGISTER	15	NOTE 3
K	300/150	SUPPLY REGISTER	15	NOTE 3
R	900/600	RETURN AIR REGISTER	15	NOTE 3
S	500/500	RETURN AIR REGISTER	15	NOTES 2 & 3
T	450/450	RETURN AIR REGISTER	15	NOTES 2 & 3
U	400/400	RETURN AIR REGISTER	15	NOTES 2 & 3
V	350/350	RETURN AIR REGISTER	15	NOTES 2 & 3
W	300/300	RETURN AIR REGISTER	15	NOTES 2 & 3
X	250/250	RETURN AIR REGISTER	15	NOTES 2 & 3
Y	200/200	RETURN AIR REGISTER	15	NOTES 2 & 3
Z	150/150	RETURN AIR REGISTER	15	NOTES 2 & 3

NOTE 1: PROVIDE OPPOSED BLADE DAMPERS THROUGHOUT.
NOTE 2: LAY−IN CEILING INSTALLATION − PROVIDE 600x600 PANELS.
NOTE 3: SET FACES BARS AT 45° ANGLE.

CONVERSION FACTORS METRIC TO ENGLISH

METRIC	MULTIPLY METRIC BY	ENGLISH
LITER (l)	0.2642	GALLON (G)
LITERS/SEC (l/s)	15.848	GALLONS/MIN (GPM)
LITERS/SEC (l/s)	2.1186	CUBIC FEET/MIN (CFM)
METERS (m)	3.2808	FEET (FT or ')
MILLIMETERS (mm)	0.03937	INCHES (IN or ")
METERS/SEC (m/s)	196.8	FEET PER MIN (FPM)
CUBIC METERS (M^3)	35.311	CUBIC FEET (FT^3)
SQ. METERS (M^2)	10.764	SQ. FEET (FT^2)
KILOWATTS (kW)	3411.37	BTU/H
KILOWATTS (kW)	0.2843	TONS OF REFRIGERATION
KILOWATTS (kW)	1.34	MOTOR HORSEPOWER (HP)
KILOWATTS (kW)	0.10194	BOILER HORSEPOWER (BP)
PASCAL (Pa)	0.004	INCHES OF WATER ("WG)
KILOPASCAL (kPa)	0.145	LBS/SQ. IN. (PSI)
KILOPASCAL (kPa)	0.3356	FEET OF WATER
VALVE COEFF. (Kv)	1.17	VALVE COEFF. (Cv)

EXHAUST FAN SCHEDULE

MARK	TYPE	AIR FLOW l/s	ESP Pa	MAX TS M/S	MOTOR kW (HP)	FAN RPM	ELECTRIC SERVICE VOLTS	ELECTRIC SERVICE PH	MOTOR STARTER SIZE	MOTOR STARTER TYPE	DRIVE	REMARKS
EF−1	ROOF EXTRACT	1945	31	–	0.56 (3/4)	1140	480	3	00	AUTO	DIRECT	NOTE 1
EF−2	ROOF EXTRACT	138	31	–	0.015 (1/50)	1300	120	1	00	AUTO	DIRECT	NOTE 1 & 2
EF−3	ROOF EXTRACT	1031	31	–	0.186 (1/4)	1140	120	1	00	AUTO	DIRECT	NOTE 1 & 2
EF−4	INLINE CENTRIF.	637	62	25.67	0.186 (1/4)	1725	120	1	00	AUTO	DIRECT	NOTE 1
EF−5	INLINE CENTRIF.	6700	124	56.7	2.23 (3)	1185	480	3	00	AUTO	DIRECT	NOTE 1
EF−6	INLINE CENTRIF.	6700	124	56.7	2.23 (3)	1185	480	3	00	AUTO	DIRECT	NOTE 1
EF−7	INLINE CENTRIF.	306	31	22.4	0.075 (1/10)	1550	120	1	00	AUTO	DIRECT	NOTE 1
EF−8	ROOF EXTRACT	87	31	16.75	0.025 (1/30)	1550	120	1	00	AUTO	DIRECT	NOTE 1 & 2
EF−9	ROOF EXTRACT	87	31	16.75	0.025 (1/30)	1550	120	1	00	AUTO	DIRECT	NOTE 1 & 2

NOTE 1: PROVIDE WITH MOTOR−SIDE GUARD, VIBRATION ISOLATORS, INTEGRAL MOTOR STARTER AND AUTOMATIC GRAVITY OPERATED BACKDRAFT DAMPER.
2. PROVIDE INTEGRAL DISCONNECT SWITCH.

DUCT CONSTRUCTION AND LEAK TEST SCHEDULE

MARK	DUCT PRESSURE CLASS SUPPLY DUCT Pa	RETURN DUCT Pa	EXHAUST DUCT Pa	OUTSIDE AIR DUCT Pa	DUCT SEAL CLASS	DUCT LEAK CLASS l/s−M 2	DUCT TEST PRESSURE	DUCT TEST TYPE	REMARKS
HEAT PUMPS (HP'S)	+248	+248	–	+248	B	0.31	2	1	
EF−4 THRU EF−7	–	–	−248.4	–	C	1.22			

1 TEST PER SHEET METAL & AIR CONDITIONING CONTRACTORS' NATIONAL ASSOCIATION (SMACNA) HVAC AIR DUCT LEAKAGE TEST MANUAL.

2 DUCT PRESSURE CLASS.

GAS−FIRED HOT WATER BOILER SCHEDULE

MARK	FUEL	INPUT (kW)	OUTPUT (kW)	BOILER kW/HP	MIN. THERMAL EFFICIENCY (%)	LWT °C	EWT °C	FLUE SIZE (mm)	BLOWER MOTOR (kW/HP)	ELECTRICAL DATA VOLTS	PH	AMPS
B−1	NAT. GAS	264	224	17.0/22.8	85	82.2	71.1	250	0.25/0.334	120	1	8
B−2	NAT. GAS	264	224	17.0/22.8	85	82.2	71.1	250	0.25/0.334	120	1	8

GAS−FIRED UNIT HEATER SCHEDULE

MARK	AIR FLOW (l/s)	INPUT (kW)	THERMAL OUTPUT (kW)	VENT. SIZE (mm)	EAT (°CDB)	LAT (°CDB)	MOUNTING HEIGHT (mm) TO UNDERSIDE	NATURAL GAS INPUT (l/s)	NATURAL GAS OUTPUT (l/s)	ELECTRICAL SERVICE MOTOR kW (HP)	VOLTS/HZ	PH	REMARKS
UH−1	194	7.32	5.85	100	12.5	27.9	4800	0.196	0.157	0.125 (1/6)	120/60	1	SEE NOTE 1.
UH−2	194	7.32	5.85	100	12.5	27.9	4800	0.196	0.157	0.125 (1/6)	120/60	1	SEE NOTE 1.
UH−3	194	7.32	5.85	100	12.5	27.9	4800	0.196	0.157	0.125 (1/6)	120/60	1	SEE NOTE 1.

NOTE 1: PROVIDE 120 VOLT CONTROL THERMOSTAT.

HEAT TRACE SCHEDULE

PIPE	LENGTH	SIZE	VOLTAGE	WATTS/METER
CWR	12 METER	150mm	120	16.7
CWS	12 METER	100mm	120	10
MAKE−UP WATER	12 METER	50mm	120	10

CLOSED−CIRCUIT COOLER SCHEDULE

MARK	TYPE	WATER FLOW l/s	COOLING LOAD kW	EWT °C	LWT °C	WPD kPa	EAT (WB) °C	FAN TYPE	FAN AIR FLOW l/s	FAN MOTOR kW/HP	SPRAY PUMP FLOW l/s	SPRAY PUMP MOTOR kW/HP	SUMP HEATER TYPE	SUMP HEATER kW	ELECTRICAL DATA VOLTS	PH
CCC−1	FORCED DRAFT	17.5	379.0	35	29.4	8.96	25	CENTRIFUGAL	22,269	18.64/25	17.91	1.19/1.5	ELECTRIC	7.0	480	3

NOTE 1: PROVIDE LOW−PROFILE CONFIGURATION COMPLETE WITH DISCHARGE HOOD WITH POSITIVE CLOSURE DAMPER(S), ELECTRIC PAN HEATER, TWO SPEED FAN MOTOR, ELECTRIC WATER LEVEL CONTROL, VIBRATION ISOLATORS AND SCREENED BOTTOM PANEL.

EXHAUST HOOD SCHEDULE

MARK	AIRFLOW l/s	ROOF OPENING mm	THROAT AREA M^2	ΔPD Pa	MATERIAL	REMARKS
H−1	561	350/350	0.126	27	ALUMINUM	
H−2	309	300/300	0.093	15	ALUMINUM	

APPR.	DATE	DESCRIPTION	SYM.

GLENN & SADLER ENGINEERS & ARCHITECTS
a division of TRANSYSTEMS CORPORATION
Town Point Center, 150 South Monroe St., Suite 1600, Norfolk, Virginia 23510-2618 – USA, Phone 757-627-1118, Fax 757-627-1153, www.transystems.com

COMMONWEALTH OF VIRGINIA, Douglas K. Henderson, No. 022387, 8/10/01, PROFESSIONAL ENGINEER — SEAL

APPROVED
ACTIVITY – SATISFACTORY TO
DATE
APPROVED
FOR EFD FOR COMMANDER NAVFAC
DATE 9/26/01

A/E		EFD
PEH	DESIGN	
KLB	DRAWN	
DKH	REVIEW	ETC
GTJ	QC	
RDF	CHIEF ARCH / ENGR.	
	PROJECT MANAGER	
	FIRE PROTECTION	
	BRANCH MANAGER	JTM
	DESIGN DIRECTOR	

DEPARTMENT OF THE NAVY — NAVAL FACILITIES ENGINEERING COMMAND — ATLANTIC DIVISION — NORFOLK, VIRGINIA
NAVAL STATION CHAMBERS FIELD, NAVAL STATION NORFOLK, VIRGINIA
P−523
AIRCRAFT MAINTENANCE HANGAR
SCHEDULES

CODE ID NO. 80091 SIZE D
SCALE. AS NOTED
EFD NO.
STA. PROJ NO. P−523
SPEC NO. 05−00−0101
CONSTR. CONTR. NO N62470−00−B−0101
NAVFAC DRAWING NO. 4450907
SHEET 220 OF 270
M−601
DRAWFORM REVISION MAY 2000

Bowman, Foster & Associates, P.C.
Consulting Engineers
Norfolk, VA 23502

GAS-FIRED INFRARED TUBE HEATER SCHEDULE

MARK	HEATER INPUT/OUTPUT	OVERALL HEATER LENGTH (mm)	MIN. VENT AIR (l/s)	CONNECTION SIZES (mm) GAS	CONNECTION SIZES (mm) FLUE	CONNECTION SIZES (mm) OA	BURNER/DRAFT INDUCER DATA: FUEL	BURNER PRESSURE (Pa)	SUPPLY PRESSURE (Pa) MIN	SUPPLY PRESSURE (Pa) MAX.	ELECTRICAL SERVICE	ELECTRICAL AMPS	IGNITION TYPE	MOUNTING HEIGHT (mm)	REMARKS
ITH-1	51.24	6875	320	15	150	150	NAT. GAS	872	1245	3487	120/1/60	2.6	DIRECT SPARK	9500	SEE NOTE 1.
ITH-2	51.24	6875	320	15	150	150	NAT. GAS	872	1245	3487	120/1/60	2.6	DIRECT SPARK	9500	SEE NOTE 1.
ITH-3	51.24	6875	320	15	150	150	NAT. GAS	872	1245	3487	120/1/60	2.6	DIRECT SPARK	9500	SEE NOTE 1.
ITH-4	51.24	6875	320	15	150	150	NAT. GAS	872	1245	3487	120/1/60	2.6	DIRECT SPARK	9500	SEE NOTE 1.
ITH-5	51.24	6875	320	15	150	150	NAT. GAS	872	1245	3487	120/1/60	2.6	DIRECT SPARK	9500	SEE NOTE 1.
ITH-6	51.24	6875	320	15	150	150	NAT. GAS	872	1245	3487	120/1/60	2.6	DIRECT SPARK	9500	SEE NOTE 1.
ITH-7	51.24	6875	320	15	150	150	NAT. GAS	872	1245	3487	120/1/60	2.6	DIRECT SPARK	9500	SEE NOTE 1.
ITH-8	51.24	6875	320	15	150	150	NAT. GAS	872	1245	3487	120/1/60	2.6	DIRECT SPARK	9500	SEE NOTE 1.
ITH-9	51.24	6875	320	15	150	150	NAT. GAS	872	1245	3487	120/1/60	2.6	DIRECT SPARK	9500	SEE NOTE 1.
ITH-10	51.24	6875	320	15	150	150	NAT. GAS	872	1245	3487	120/1/60	2.6	DIRECT SPARK	9500	SEE NOTE 1.
ITH-11	51.24	6875	320	15	150	150	NAT. GAS	872	1245	3487	120/1/60	2.6	DIRECT SPARK	9500	SEE NOTE 1.
ITH-12	51.24	6875	320	15	150	150	NAT. GAS	872	1245	3487	120/1/60	2.6	DIRECT SPARK	9500	SEE NOTE 1.

NOTE 1: MOUNT ALL HEATERS AT 45 DEGREES.

HOT WATER HEATING COIL SCHEDULE

MARK	AIR FLOW (l/s)	WATER FLOW (l/s)	FACE VELOCITY (m/s)	EAT (°C)	LAT (°C)	EWT (°C)	CAPACITY (kW)	AIR PD (Pa)	WATER PD (Pa)	SIZE WIDTH (mm)	SIZE LENGTH (mm)
HWC-1	922	2.83	0.78	-5.5	14.6	22	23.75	7.5	269	610	965
HWC-2	1143	2.83	0.96	-5.5	13.4	22	27.53	10.0	269	610	965

HEAT PUMP SCHEDULE – WATER TO AIR

MARK	AREA(S) SERVED	FAN DATA AIR FLOW l/s	FAN DATA ESP Pa	FAN DATA MOTOR Kw/HP	VENT AIR l/s	WATER FLOW l/s	COOLING DATA (NOTE 1) TOTAL kW	SENSIBLE kW	EAT CDB	EAT CWB	LAT CDB	LAT CWB	HEATING TOTAL kW (NOTE 2)	HEAT OF ABSORPTION kW	WATER PD kPa	FILTER AREA SM	BALANCING VALVE SIZE	BALANCING VALVE Cv	ELECTRICAL SERVICE TOTAL FLA	MCA	MFS	VOLTS	PH	REMARKS	MARK
HP-1	1st. FLOOR O.A.	922	187	1.19/1.5	922	3.42	52.85	26.48	32.8	24.4	9.7	8.4	26.94	69	51	1.76	50	19.9	17.90	39.5	50	480	3	SEE NOTE 3 & 6. VERTICAL UNIT.	HP-1
HP-2	W107 & W108	180	87	0.075/0.10	19	0.19	3.42	2.44	25.8	18.8	14.8	13.3	3.82	4	33	0.10	20	1.4	4.85	5.9	15	277	1		HP-2
HP-3	W109	163	130	0.075/0.10	86	0.19	3.18	2.30	25.8	18.4	14.1	12.9	3.77	4	33	0.10	20	1.4	4.85	5.9	15	277	1		HP-3
HP-4	W110	142	110	0.075/0.10	38	0.17	2.68	1.91	25.8	18.4	14.7	12.9	3.39	4	26	0.10	20	1.4	4.15	5.0	15	277	1		HP-4
HP-5	W111	142	110	0.075/0.10	47	0.17	2.68	1.91	25.8	18.4	14.7	12.9	3.39	4	26	0.10	20	1.4	4.15	5.0	15	277	1		HP-5
HP-6	W104 & W105	167	125	0.075/0.10	66	0.13	2.47	1.79	25.8	17.9	13.8	12.4	3.26	3	14	0.10	20	1.6	4.15	5.0	15	277	1		HP-6
HP-7	W117	118	100	0.075/0.10	19	0.09	1.99	1.53	25.9	18.4	15.2	12.9	2.52	3	7	0.10	15	1.5	3.75	4.5	15	277	1		HP-7
HP-8	W112 – W115	280	137	0.186/0.25	104	0.33	5.25	3.82	25.8	18.3	14.5	12.8	6.57	7	76	0.20	25	1.6	9.30	11.2	15	277	1		HP-8
HP-9	C112, C113 & C114	142	72	0.075/0.10	20	0.12	2.18	1.60	25.8	19.1	16.4	13.6	2.64	3	11	0.10	15	1.5	3.75	4.5	15	277	1		HP-9
HP-10	W116	165	57	0.075/0.10	57	0.15	3.08	2.07	25.8	18.3	15.6	12.8	3.43	4	21	0.10	15	1.4	4.15	5.0	15	277	1		HP-10
HP-11	C107 – C110	156	150	0.075/0.10	20	0.24	3.95	2.53	25.8	19.1	12.3	13.6	5.01	5	38	0.20	20	1.6	6.65	8.1	15	277	1		HP-11
HP-12	E116	165	57	0.075/0.10	57	0.15	2.70	2.05	25.8	18.3	15.6	12.8	3.43	4	21	0.10	15	1.4	4.15	5.0	15	277	1		HP-12
HP-13	E112 – E115	284	82	0.186/0.25	104	0.32	5.25	3.87	25.8	18.4	14.6	12.9	6.56	7	68	0.20	20	1.6	9.30	11.2	15	277	1		HP-13
HP-14	E117	123	125	0.075/0.10	66	0.15	2.52	1.80	25.8	17.9	13.7	12.4	3.30	3	21	0.10	15	1.4	4.15	5.0	15	277	1		HP-14
HP-15	E104 & E105	152	105	0.075/0.10	38	0.16	3.06	2.21	25.8	18.4	13.8	12.9	3.69	4	21	0.10	15	1.4	4.85	5.9	15	277	1		HP-15
HP-16	E111	149	87	0.075/0.10	47	0.15	2.66	1.95	25.8	18.4	15.0	12.9	3.38	4	21	0.10	15	1.4	4.15	5.0	15	277	1		HP-16
HP-17	E107 & E108	177	157	0.075/0.10	19	0.24	4.02	2.68	25.8	18.8	13.3	13.3	5.08	5	38	0.20	20	1.6	6.65	8.1	15	277	1		HP-17
HP-18	E109	166	125	0.075/0.10	66	0.19	3.20	2.33	25.8	18.4	14.2	12.9	3.78	4	33	0.10	20	1.4	4.85	5.9	15	277	1		HP-18
HP-19	E110	142	110	0.075/0.10	38	0.17	2.67	1.90	25.8	18.3	14.7	12.8	3.39	4	26	0.10	20	1.4	4.15	5.0	15	277	1		HP-19
HP-20	W103,W106,C105,C106,E103,E106	448	122	0.186/0.25	11	0.44	8.17	5.78	25.8	19.3	15.2	13.8	8.80	10	42	0.23	25	2.9	5.20	6.3	15	480	3		HP-20
HP-21	W102	123	125	0.075/0.10	0	0.15	2.51	1.79	25.7	17.8	13.7	12.3	3.30	3	21	0.10	15	1.4	4.15	5.0	15	277	1	FREE BLOW UNIT	HP-21
HP-22	E102	123	125	0.075/0.10	0	0.15	2.51	1.79	25.8	17.8	13.7	12.3	3.30	3	21	0.10	15	1.4	4.15	5.0	15	277	1	FREE BLOW UNIT	HP-22
HP-23	C104	844	130	0.56/0.75	0	0.82	13.18	11.54	26.1	16.1	14.7	10.6	15.50	17	37	0.23	25	5.6	8.90	10.5	15	480	3	FREE BLOW UNIT	HP-23
HP-24	H102	668	77	0.37/0.5	76	0.66	11.10	9.26	25.7	16.1	14.2	10.6	13.31	14	22	0.34	32	4.2	7.60	9	15	480	3		HP-24
HP-25	H103	644	92	0.37/0.5	76	0.66	11.02	9.08	25.8	16.1	14.2	10.6	13.24	14	38	0.34	32	4.2	7.60	9	15	480	3		HP-25
FF TOTALS		**6741**			**1996**	**9.62**	**157.79**	**106.29**					**154.82**	**206**	**766**										**FF TOTALS**
HP-26	2nd. FLOOR O.A.	1143	187	1.19/1.5	1163	3.42	57.49	29.37	32.8	24.4	12.1	18.9	28.40	74	51	1.76	50	19.9	17.90	39.5	50	480	3	SEE NOTE 3 & 6. VERTICAL UNIT.	HP-26
HP-27	W203	126	122	0.075/0.10	10	0.15	2.57	1.78	25.8	18.4	14.1	12.9	3.31	3	21	0.10	15	1.4	4.15	5.0	15	277	1		HP-27
HP-28	W204	118	100	0.075/0.10	10	0.12	2.06	1.47	25.8	18.3	15.5	12.8	2.57	3	11	0.10	15	1.5	3.75	4.5	15	277	1		HP-28
HP-29	W205 – W209	480	110	0.186/0.25	116	0.51	9.13	6.99	25.8	18.3	13.8	12.8	11.03	11	22	0.23	25	4.6	6.00	7.3	15	480	3		HP-29
HP-30	W219	283	132	0.186/0.25	142	0.25	4.84	3.97	25.6	16.8	13.9	11.3	6.43	6	43	0.23	20	1.6	9.30	11.2	15	277	1		HP-30
HP-31	W216 & W218	131	115	0.075/0.10	57	0.15	2.59	1.91	25.9	18.4	13.9	12.9	3.33	3	21	0.10	15	1.4	4.15	5.0	15	277	1		HP-31
HP-32	W210 – W212	541	62	0.186/0.25	183	0.51	10.40	7.78	25.8	18.1	14.1	12.6	11.24	12	22	0.23	25	4.6	6.00	7.3	15	480	3		HP-32
HP-33	W214 & W215	229	80	0.075/0.10	75	0.24	4.18	3.15	25.8	18.3	14.4	12.8	5.25	5	38	0.20	20	1.6	6.65	8.1	15	277	1		HP-33
HP-34	C204, C205 & C207	134	110	0.075/0.10	20	0.15	2.65	1.81	25.8	19.1	14.6	13.6	3.33	4	21	0.10	15	1.6	4.15	5.0	15	277	1		HP-34
HP-35	C209	321	165	0.186/0.25	142	0.37	6.48	4.74	25.8	18.0	13.6	12.5	7.69	8	32	0.23	20	2.7	9.80	11.9	20	277	1		HP-35
HP-36	E212 & E213	283	132	0.186/0.25	75	0.33	5.28	3.86	25.8	18.3	14.5	12.8	6.59	7	76	0.23	20	1.6	9.30	11.2	15	277	1		HP-36
HP-37	E215	160	82	0.075/0.10	38	0.17	2.74	2.04	25.8	18.3	15.3	12.8	3.45	4	26	0.10	20	1.4	4.15	5.0	15	277	1		HP-37
HP-38	E208 – E211	623	90	0.37/0.5	180	0.63	10.27	8.28	25.7	18.0	14.8	12.5	11.32	13	40	0.34	25	4.2	7.00	8.3	15	480	3		HP-38
HP-39	E205 – E207	424	135	0.186/0.25	95	0.44	7.87	5.87	25.8	18.3	14.3	12.8	8.73	10	42	0.23	25	2.9	5.20	6.3	15	480	3		HP-39
HP-40	E204	118	100	0.075/0.10	10	0.09	1.98	1.45	25.7	18.3	15.6	12.8	2.52	3	7	0.10	15	1.5	3.75	4.5	15	277	1		HP-40
HP-41	E203	130	115	0.075/0.10	10	0.13	2.12	1.63	25.9	18.5	15.4	13	2.62	3	13	0.10	15	1.5	3.75	4.5	15	277	1		HP-41
HP-42	E202, C201, W202	193	137	0.075/0.10	0	0.24	4.17	2.75	25.8	19.4	14.1	13.9	5.13	6	38	0.20	20	1.6	6.65	8.1	15	277	1		HP-42
SF TOTALS		**5433**			**2326**	**7.91**	**135.65**	**88.74**					**122.93**	**175**	**524**										**SF TOTALS**
TOTALS		**12175**			**4322**	**17.53**	**293.43**	**195.04**					**277.75**	**381**	**1290**										**TOTALS**

NOTES:
1. BASED ON 29.4 DEG. C. ENTERING AIR TEMPERATURE.
2. BASED ON 22.1 DEG. C. ENTERING WATER TEMPERATURE.
3. PROVIDE FACTORY INSTALLED HOT GAS REHEAT AND HOT GAS BY-PASS.
4. ALL UNITS ARE HORIZONTAL CONFIGURATION, UNLESS NOTED OTHERWISE.
5. PROVIDE INTEGRAL MOTOR STARTER FOR ALL UNITS.
6. REFER TO HEATING COIL SCHEDULE, SHEET M-601.

GLENN & SADLER
ENGINEERS & ARCHITECTS
a division of
TRANSYSTEMS CORPORATION
Town Point Center
150 Boush Street ~ Suite 1000
Norfolk ~ Virginia ~ USA
23510-1626
Phone 757-627-1112
Fax 757-627-1113
www.transystems.com

COMMONWEALTH OF VIRGINIA
Douglas K. Henderson
No. 022397
8/10/01
PROFESSIONAL ENGINEER
SEAL

APPROVED

ACTIVITY – SATISFACTORY TO

DATE

APPROVED

FOR EFD FOR COMMANDER NAVFAC

9/26/01

DATE

A/E		EFD
PEH	DESIGN	
KLB	DRAWN	
DKH	REVIEW	ETC
GTJ	QC	
RDF	CHIEF ARCH / ENGR.	

PROJECT MANAGER
FIRE PROTECTION DF
BRANCH MANAGER JTM
DESIGN DIRECTOR

DEPARTMENT OF THE NAVY
NAVAL FACILITIES ENGINEERING COMMAND
ATLANTIC DIVISION
NAVAL STATION NORFOLK, VIRGINIA
CHAMBERS FIELD, NAVAL STATION NORFOLK, VIRGINIA
P-523
AIRCRAFT MAINTENANCE HANGAR
SCHEDULES

CODE ID NO. 80091 SIZE D
SCALE: AS NOTED
EFD NO.
STA. PROJ NO. P-523
SPEC NO. 05-00-0101
CONSTR. CONTR. NO N62470-00-B-0101
NAVFAC DRAWING NO. 4450908
SHEET 221 OF 270

M-602

DRAWFORM REVISION MAY 2000

Bowman, Foster & Associates, P.C.
Consulting Engineers
Norfolk, VA 23502

SHEET NOTES

1. DIMENSIONS ARE IN MILLIMETERS (mm) UNLESS NOTED OTHERWISE.
2. LEGEND AND ABBREVIATIONS ON SHEET M-001.
3. EQUIPMENT SCHEDULES ON SHEET M-601 AND M-602.
4. FOR HEAT PUMP UNITS HP-1 AND HP-26. SEE SHEET M-413.

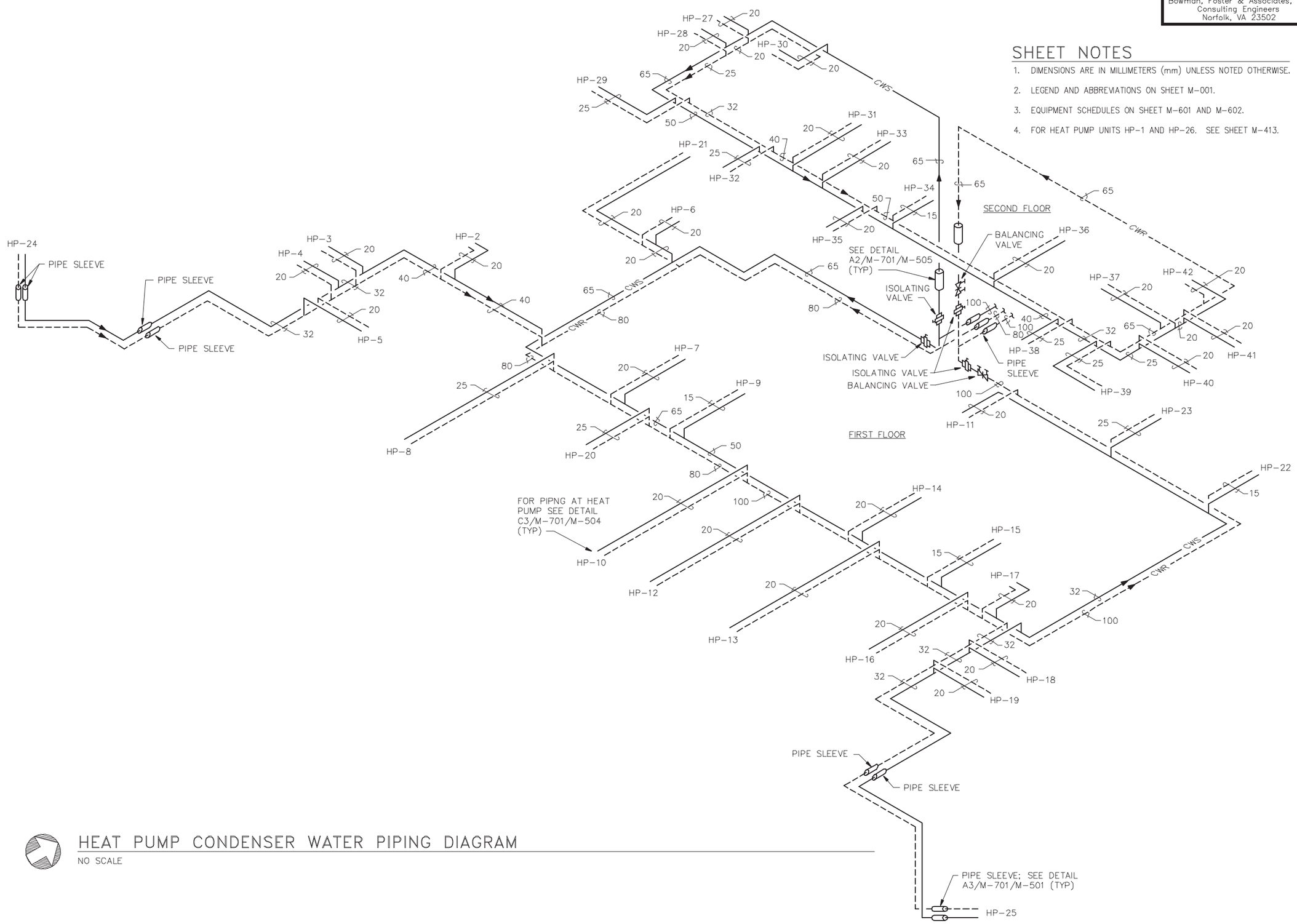

HEAT PUMP CONDENSER WATER PIPING DIAGRAM

NO SCALE

SYM.	DESCRIPTION	DATE	APPR.

GLENN & SADLER
ENGINEERS & ARCHITECTS
a division of TRANSYSTEMS CORPORATION
Town Point Center
150 South Monroe Street, Suite 1000
Norfolk, Virginia 23510-2811 USA
Phone 757-627-1118
Fax 757-627-1112
www.transystems.com

COMMONWEALTH OF VIRGINIA
Douglas K. Henderson
No. 022387
8/10/01
PROFESSIONAL ENGINEER
SEAL

APPROVED
ACTIVITY – SATISFACTORY TO
DATE
APPROVED
FOR EFD FOR COMMANDER NAVFAC
9/26/01
DATE

A/E		EFD
PEH	DESIGN	
KLB	DRAWN	
DKH	REVIEW	ETC
GTJ	QC	
RDF	CHIEF ARCH / ENGR.	

PROJECT MANAGER
FIRE PROTECTION
BRANCH MANAGER
DESIGN DIRECTOR

DEPARTMENT OF THE NAVY
NAVAL FACILITIES ENGINEERING COMMAND
ATLANTIC DIVISION
NAVAL STATION
NORFOLK, VIRGINIA
CHAMBERS FIELD, NAVAL STATION
NORFOLK, VIRGINIA
P-523
AIRCRAFT MAINTENANCE HANGAR
HEAT PUMP CONDENSER WATER PIPING DIAGRAM

CODE ID NO. 80091 | SIZE D
SCALE. AS NOTED
EFD NO.
STA. PROJ NO. P-523
SPEC NO. 05-00-0101
CONSTR. CONTR. NO
N62470-00-B-0101
NAVFAC DRAWING NO.
4450909
SHEET 222 OF 270

M-701

DRAWFORM REVISION MAY 2000

Bowman, Foster & Associates, P.C.
Consulting Engineers
Norfolk, VA 23502

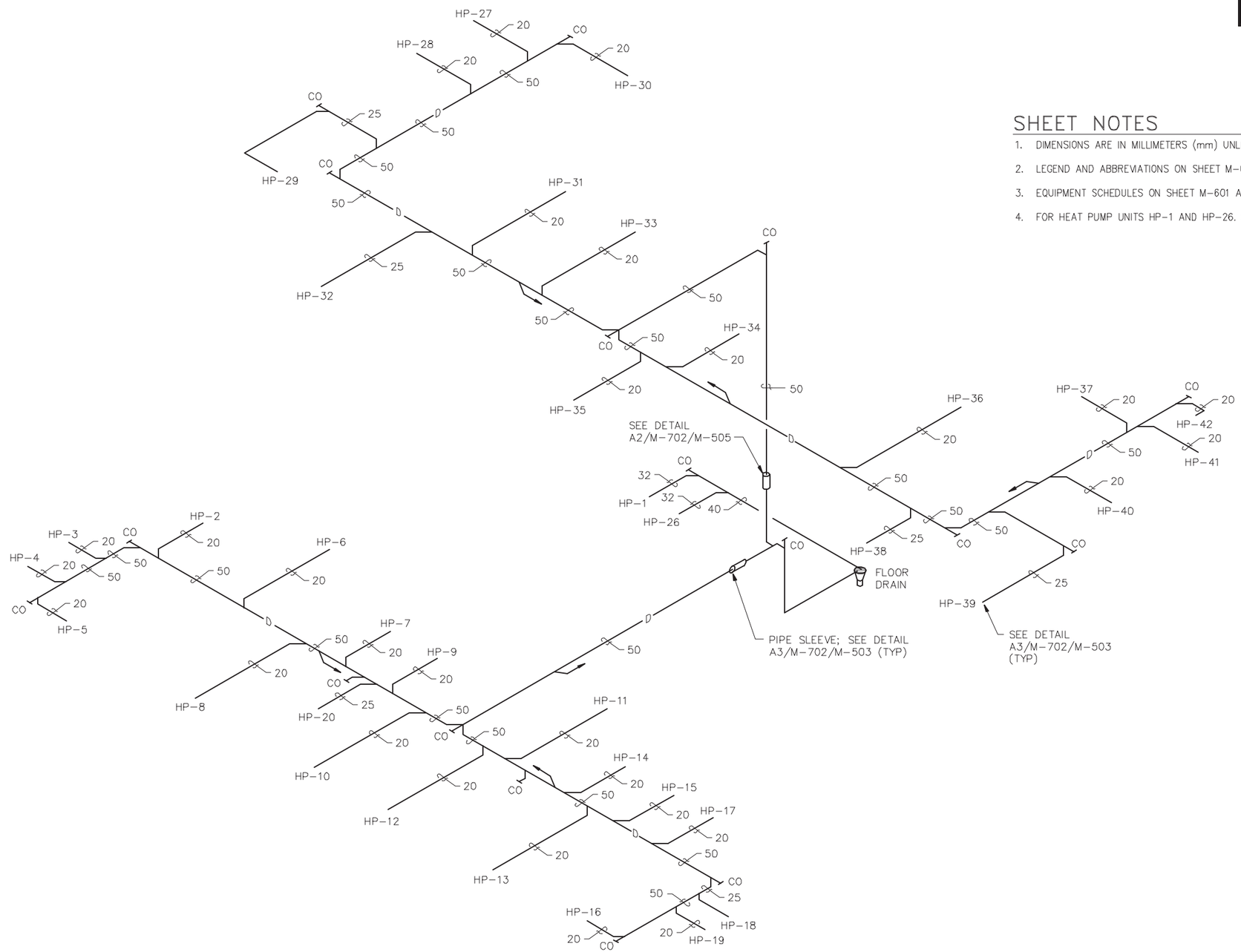

SHEET NOTES

1. DIMENSIONS ARE IN MILLIMETERS (mm) UNLESS NOTED OTHERWISE.
2. LEGEND AND ABBREVIATIONS ON SHEET M-001.
3. EQUIPMENT SCHEDULES ON SHEET M-601 AND M-602.
4. FOR HEAT PUMP UNITS HP-1 AND HP-26. SEE SHEET M-413.

HEAT PUMP CONDENSATE PIPING DIAGRAM

NO SCALE

SYM.	DESCRIPTION	DATE	APPR.

GLENN & SADLER
ENGINEERS & ARCHITECTS
a division of
TRANSYSTEMS CORPORATION
Town Point Center
150 South Monroe Street, Suite 1000
Norfolk, Virginia 23510-1626 USA
Phone 757-627-1118
Fax 757-627-1112
www.transystems.com

COMMONWEALTH OF VIRGINIA
Douglas K. Henderson
No. 022387
8/10/01
PROFESSIONAL ENGINEER
SEAL

APPROVED

ACTIVITY – SATISFACTORY TO

DATE

APPROVED
FOR EFD FOR COMMANDER NAVFAC
9/26/01

DATE

A/E		EFD
PEH	DESIGN	
KLB	DRAWN	
DKH	REVIEW	ETC
GTJ	QC	
RDF	CHIEF ARCH / ENGR.	

PROJECT MANAGER
FIRE PROTECTION
BRANCH MANAGER
DESIGN DIRECTOR

DEPARTMENT OF THE NAVY
NAVAL FACILITIES ENGINEERING COMMAND
ATLANTIC DIVISION
NAVAL STATION
NORFOLK, VIRGINIA
CHAMBERS FIELD, NAVAL STATION
NORFOLK, VIRGINIA
AIRCRAFT MAINTENANCE HANGAR
P-523
HEAT PUMP CONDENSATE PIPING DIAGRAM

CODE ID NO. 80091 | SIZE D
SCALE. AS NOTED
EFD NO.
STA. PROJ NO. P-523
SPEC NO. 05-00-0101
CONSTR. CONTR. NO
N62470-00-B-0101
NAVFAC DRAWING NO.
4450910
SHEET 223 OF 270
M-702

DRAWFORM REVISION MAY 2000

Bowman, Foster & Associates, P.C.
Consulting Engineers
Norfolk, VA 23502

NOTES

1. DUCT SIZES ARE IN MILLIMETERS (mm).
2. EQUIPMENT SCHEDULES ON SHEET M-601 AND M-602.
3. LEGEND AND ABBREVIATIONS ON SHEET M-001.

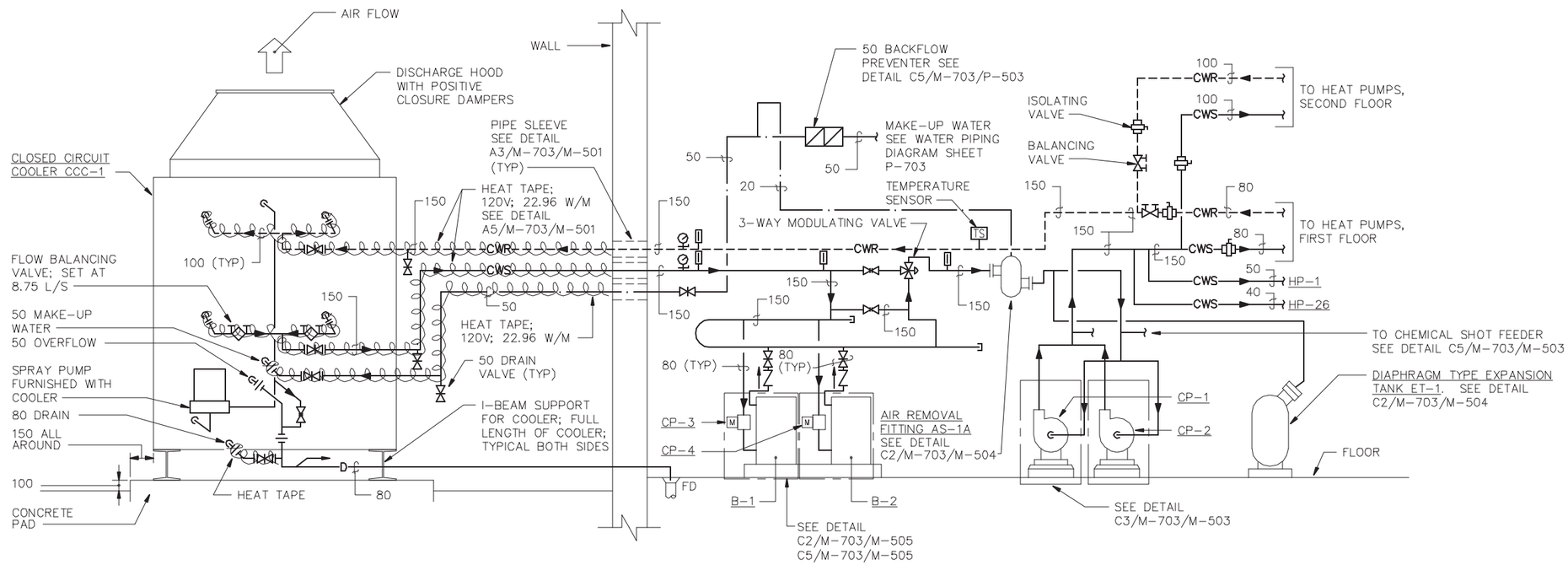

HEAT PUMP WATER PIPING DIAGRAM

NO SCALE

SYM.	DESCRIPTION	DATE	APPR.

GLENN & SADLER
ENGINEERS & ARCHITECTS
a division of TRANSYSTEMS CORPORATION
Town Point Center
150 South Monroe Street, Suite 1000
Norfolk, Virginia 23510-1626 USA
Phone 757-627-1118
Fax 757-627-1112
www.transystems.com

COMMONWEALTH OF VIRGINIA
Douglas K. Henderson
No. 022397
8/10/01
PROFESSIONAL ENGINEER
SEAL

APPROVED
ACTIVITY – SATISFACTORY TO
DATE
APPROVED
FOR EFD FOR COMMANDER NAVFAC
9/26/01
DATE

A/E		EFD
PEH	DESIGN	
KLB	DRAWN	
DKH	REVIEW	ETC
GTJ	QC	
RDF	CHIEF ARCH / ENGR.	

PROJECT MANAGER
FIRE PROTECTION
BRANCH MANAGER
DESIGN DIRECTOR

DEPARTMENT OF THE NAVY
NAVAL FACILITIES ENGINEERING COMMAND
ATLANTIC DIVISION
NORFOLK, VIRGINIA
NAVAL STATION
CHAMBERS FIELD, NAVAL STATION
NORFOLK, VIRGINIA
P-523
AIRCRAFT MAINTENANCE HANGAR
HEAT PUMP WATER PIPING DIAGRAM

CODE ID NO. 80091 | SIZE D
SCALE. AS NOTED
EFD NO.
STA. PROJ NO. P-523
SPEC NO. 05-00-0101
CONSTR. CONTR. NO
N62470-00-B-0101
NAVFAC DRAWING NO.
4450911
SHEET 224 OF 270
M-703
DRAWFORM REVISION MAY 2000

Bowman, Foster & Associates, P.C.
Consulting Engineers
Norfolk, VA 23502

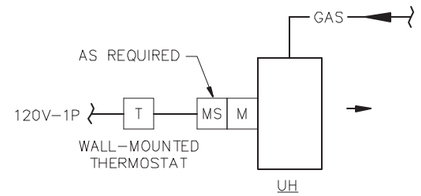

UNIT HEATER CONTROL DIAGRAM

NO SCALE

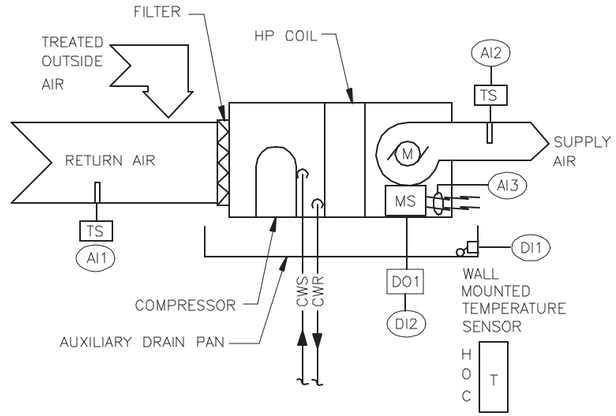

HP-2 THRU HP-25; HP-27 THRU HP-42			NOTES
LOCAL DDC CONTROLLER			
INPUTS			
ANALOG	AI1	RA TEMP	
	AI2	SA TEMP	
	AI3	INPUT CURRENT	
DIGITAL	DI1	DRAIN PAN STATUS	1
	DI2	REVERSING VALVE STATUS	
OUTPUTS			
DIGITAL		ENABLE UNIT	

NOTES

1. USE IF UNIT IS ABOVE CEILING

HEAT PUMP UNIT CONTROL DIAGRAM (T'STAT)

NO SCALE

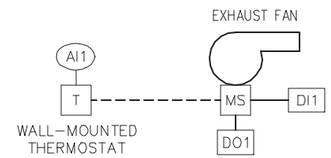

EF-5 AND EF-6		
LOCAL DDC CONTROLLER		
INPUTS		
ANALOG	AI1	HANGAR TEMP
DIGITAL	DI1	FAN STATUS
OUTPUTS		
DIGITAL	DO1	FAN ENABLE

EXHAUST FANS EF-1, EF-2, EF-3, EF-5, EF-6, EF-8 AND EF-9 CONTROL DIAGRAM

NO SCALE

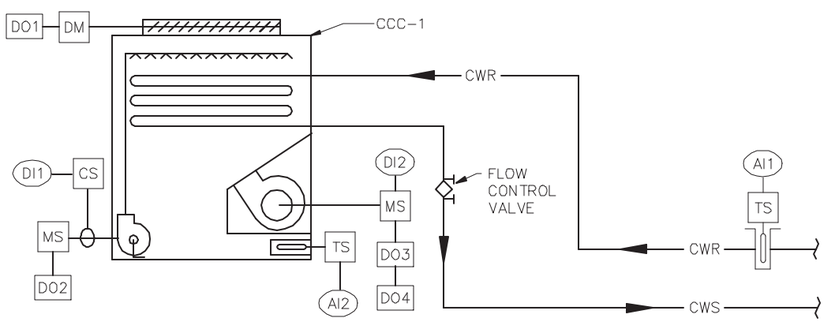

CCC-1		
LOCAL DDC CONTROLLER		
INPUTS		
ANALOG	AI1	CWR TEMP
	AI2	TANK TEMP
DIGITAL	DI1	SPRAY PUMP STATUS
	DI2	FAN STATUS
OUTPUTS		
DIGITAL	DO1	DAMPER POSITION
	DO2	SPRAY PUMP S/S
	DO3	LOW SPEED FAN S/S
	DO4	HIGH SPEED FAN S/S

CLOSED CIRCUIT COOLER CONTROL DIAGRAM (CCC-1)

NO SCALE

NOTE: INTERLOCKED WITH OPERATION OF RESPECTIVE VENTILATION AIR HEAT PUMP UNIT

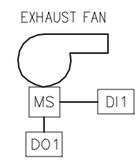

EF-1 THRU EF-4 AND EF-7 THRU EF-9		
LOCAL DDC CONTROLLER		
INPUTS		
DIGITAL	DI1	FAN STATUS
OUTPUTS		
DIGITAL	DO1	FAN START/STOP

EXHAUST FANS EF-4 AND EF-7 CONTROL DIAGRAM

NO SCALE

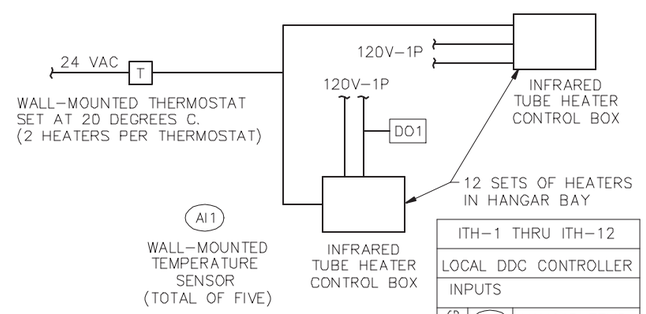

ITH-1 THRU ITH-12		
LOCAL DDC CONTROLLER		
INPUTS		
ANALOG	AI1	HANGAR TEMP

GAS-FIRED INFRARED TUBE HEATER CONTROLS

NO SCALE

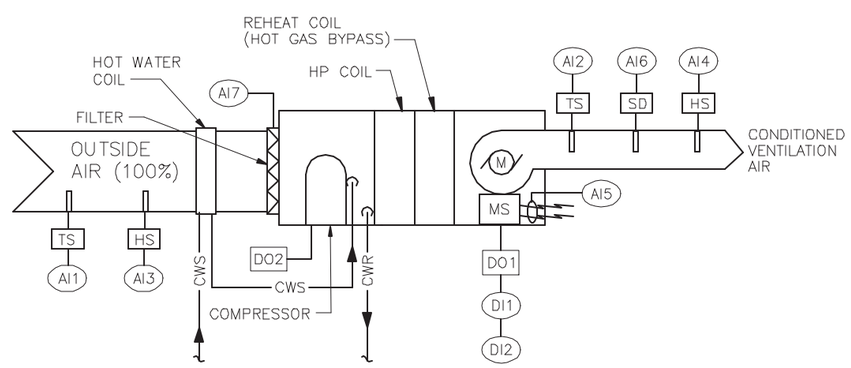

HP-1 & HP-26		
LOCAL DDC CONTROLLER		
INPUTS		
ANALOG	AI1	OA TEMP
	AI2	SA TEMP
	AI3	OA RELATIVE HUMIDITY
	AI4	SA RELATIVE HUMIDITY
	AI5	INPUT CURRENT
	AI6	SMOKE DETECTOR
	AI7	DIRTY AIR FILTER
DIGITAL	DI1	REVERSING VALVE STATUS
	DI2	HOT GAS BY-PASS STATUS
OUTPUTS		
DIGITAL	DO1	ENABLE UNIT
	DO2	COMPRESSOR START/STOP

VENTILATION AIR HEAT PUMP UNIT CONTROL DIAGRAM

NO SCALE

(HP-1 AND HP-26)

APPR	DATE	DESCRIPTION	SYM.

GLENN & SADLER ENGINEERS & ARCHITECTS
a division of TRANSYSTEMS CORPORATION
Town Point Center
150 South Monroe St. Suite 1000
Norfolk, Virginia 23510-2811 USA
Phone 757-627-1118
Fax 757-627-1113
www.transystems.com

COMMONWEALTH OF VIRGINIA
Douglas K. Henderson
No. 022397
8/10/01
PROFESSIONAL ENGINEER
SEAL

APPROVED

ACTIVITY – SATISFACTORY TO

DATE

APPROVED
FOR EFD FOR COMMANDER NAVFAC
9/26/01

DATE

A/E		EFD
PEH	DESIGN	
KLB	DRAWN	
DKH	REVIEW	ETC
GTJ	QC	
RDF	CHIEF ARCH / ENGR.	

PROJECT MANAGER
FIRE PROTECTION
BRANCH MANAGER
DESIGN DIRECTOR

DEPARTMENT OF THE NAVY
NAVAL FACILITIES ENGINEERING COMMAND
ATLANTIC DIVISION
NAVAL STATION CHAMBERS FIELD, NAVAL STATION NORFOLK, VIRGINIA NORFOLK, VIRGINIA

AIRCRAFT MAINTENANCE HANGAR P-523

CONTROLS

CODE ID NO. 80091 | SIZE D
SCALE. AS NOTED
EFD NO.
STA. PROJ NO. P-523
SPEC NO. 05-00-0101
CONSTR. CONTR. NO
N62470-00-B-0101
NAVFAC DRAWING NO.
4450912
SHEET 225 OF 270

M-801

DRAWFORM REVISION MAY 2000

Bowman, Foster & Associates, P.C.
Consulting Engineers
Norfolk, VA 23502

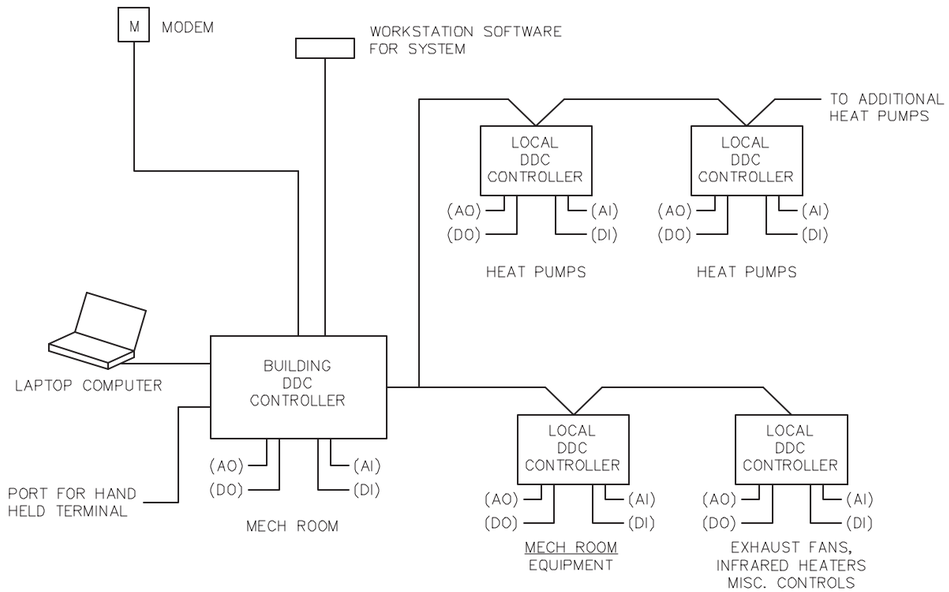

DDC SYSTEM DIAGRAM

NO SCALE

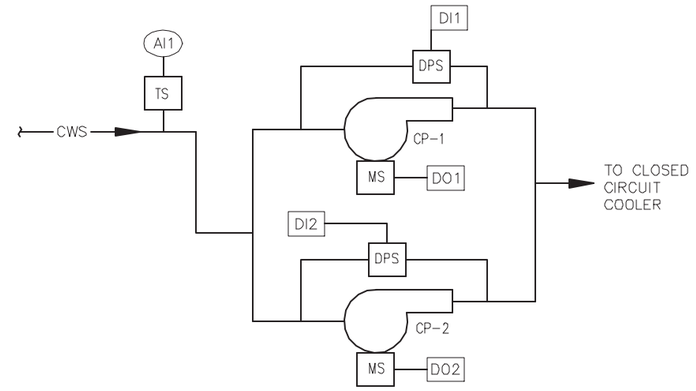

CP-1 & CP-2		
LOCAL DDC CONTROLLER		
INPUTS		
ANALOG	AI1	CWR TEMP
DIGITAL	DI1	CP-1 STATUS
	DI2	CP-2 STATUS
OUTPUTS		
ANALOG		
DIGITAL	DO1	CP-1 START/STOP
	DO2	CP-2 START/STOP

CONDENSER WATER CIRCULATING PUMP CONTROL DIAGRAM

NO SCALE

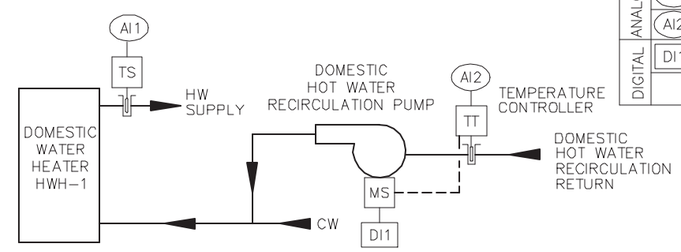

HOT WATER RECIRCULATION PUMP		
LOCAL DDC CONTROLLER		
INPUTS		
ANALOG	AI1	HOT WATER SUPPLY TEMP
	AI2	DOMESTIC HOT WATER RECIRCULATION RETURN TEMP
DIGITAL	DI1	PUMP STATUS

DOMESTIC HOT WATER RECIRCULATION PUMP

NO SCALE

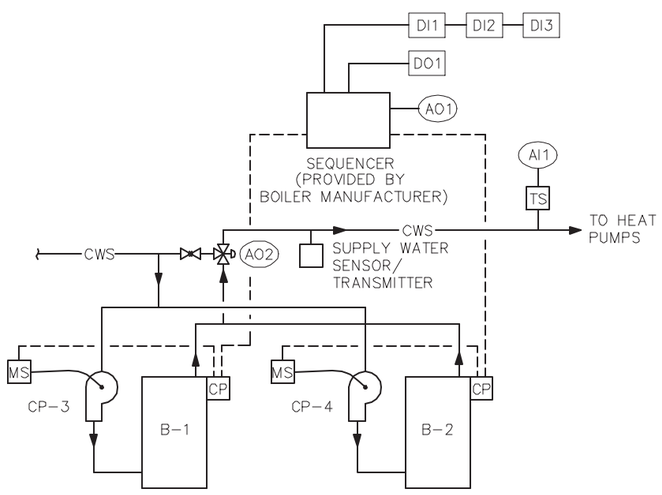

B-1 & B-2		
LOCAL DDC CONTROLLER		
INPUTS		
ANALOG	AI1	CWS TEMP
DIGITAL	DI1	PUMP STATUS
	DI2	ALARMS
	DI3	HEATING SYSTEM STATUS
OUTPUTS		
ANALOG	AO1	HEATING WATER SET POINT
	AO2	3-WAY VALVE
DIGITAL	DO1	BOILERS ENABLE

HOT WATER HEATING CONTROL DIAGRAM

NO SCALE

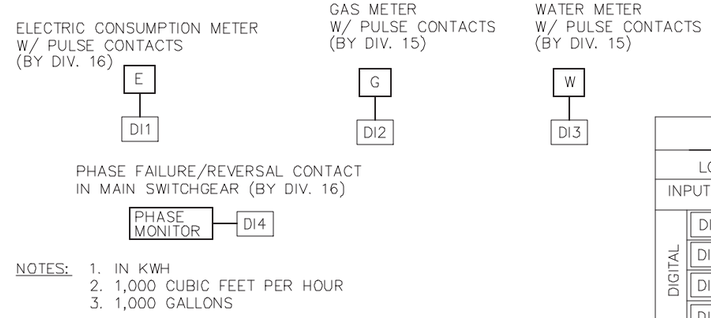

NOTES:
1. IN KWH
2. 1,000 CUBIC FEET PER HOUR
3. 1,000 GALLONS

UTILITIES			NOTES
LOCAL DDC CONTROLLER			
INPUTS			
DIGITAL	DI1	TOTAL ELEC CONSUMED	1
	DI2	TOTAL GAS CONSUMED	2
	DI3	TOTAL WATER USED	3
	DI4	PHASE STATUS	

UTILITIES MONITORING

NO SCALE

GLENN & SADLER
ENGINEERS & ARCHITECTS
a division of TRANSYSTEMS CORPORATION
Town Point Center
150 South Monroe Street, Suite 1000
Norfolk, Virginia 23510-2618 USA
Phone 757-627-1112
Fax 757-627-1113
www.transystems.com

COMMONWEALTH OF VIRGINIA
Douglas K. Henderson
No. 022387
8/10/01
PROFESSIONAL ENGINEER
SEAL

APPROVED
ACTIVITY – SATISFACTORY TO
DATE
APPROVED
FOR EFD FOR COMMANDER NAVFAC
9/26/01
DATE

A/E		EFD
PEH	DESIGN	
KLB	DRAWN	
DKH	REVIEW	ETC
GTJ	QC	
RDF	CHIEF ARCH / ENGR.	

PROJECT MANAGER
FIRE PROTECTION
BRANCH MANAGER
DESIGN DIRECTOR

DEPARTMENT OF THE NAVY
NAVAL FACILITIES ENGINEERING COMMAND
ATLANTIC DIVISION
NAVAL STATION CHAMBERS FIELD, NAVAL STATION NORFOLK, VIRGINIA
NORFOLK, VIRGINIA
P-523
AIRCRAFT MAINTENANCE HANGAR
CONTROLS

CODE ID NO. 80091 | SIZE D
SCALE. AS NOTED
EFD NO.
STA. PROJ NO. P-523
SPEC NO. 05-00-0101
CONSTR. CONTR. NO
N62470-00-B-0101
NAVFAC DRAWING NO.
4450913
SHEET 226 OF 270
M-802
DRAWFORM REVISION MAY 2000

Bowman, Foster & Associates, P.C.
Consulting Engineers
Norfolk, VA 23502

SEQUENCE OF OPERATIONS

HEAT PUMP UNIT CONTROLS:

FOR EACH HEAT PUMP UNIT, PROVIDE A WALL-MOUNTED TEMPERATURE SENSOR WHICH ACTING THROUGH THE DDC CONTROLS SHALL PROVIDE COOLING AND HEATING. THE DDC CONTROLS SHALL ENABLE THE LOCAL HEAT PUMP CONTROLS.

COOLING: ON A RISE IN ROOM TEMPERATURE ABOVE THE TRANSMITTER SET-POINT OF 23.9 DEGREES C., THE UNIT'S REVERSING VALVE SHALL BE POSITIONED FOR COOLING. THE SET POINT SHALL BE ADJUSTABLE FROM LOCAL DDC CONTROLLER.

HEATING: ON A DROP IN ROOM TEMPERATURE BELOW THE HEATING SET POINT OF 20 DEGREES C., THE UNIT'S REVERSING VALVE SHALL BE POSITIONED FOR HEATING. THE SET POINT SHALL BE ADJUSTABLE FROM LOCAL DDC CONTROLLER.

THE UNIT FAN SHALL RUN CONTINUOUSLY WHEN ENABLED BY THE DDC CONTROLS.

VENTILATION AIR HEAT PUMP UNIT CONTROLS:

EACH UNIT SHALL BE BASED ON THE OUTSIDE AIR TEMPERATURE AND THE COOLING VENTILATION AND HEATING MODE SET POINTS, SHALL BE ADJUSTABLE VIA THE DDC CONTROLLER. COOLING SHALL BE ENERGIZED ABOVE 12.7 DEGREES C, VENTILATION BETWWEEN -1.1 AND 12.7 DEGREES C, AND HEATING BELOW -1.1 DEGREES C. THE PRE-HEAT COIL WILL RAISE THE SUPPLY TEMPERATURE TO BETWEEN 16.6 - 22.2 DEGREES C ABOVE THE ENTERING OUTSIDE AIR TEMPERATURE.

VENTILATION

AT AN OUTSIDE AIR TEMPERATURE OF BETWEEN -1.1 AND 12.7 DEGREES C, THE UNIT FAN SHALL RUN AND THE PRE-HEAT COIL SHALL CONDITION THE VENTILATION AIR TO BETWEEN 18.0 AND 23.8 DEGREES C.

COOLING

ON A RISE IN TEMPERATURE TO ABOVE 12.7 DEGREES C, THE DX COIL DISCHARGE SENSOR SHALL CONTROL THE COOLING COIL LEAVING AIR TEMPERATURE TO 12.7 DEGREES C. THE UNIT SUPPLY AIR TEMPERATURE SHALL CONTROL THE HOT GAS REHEAT COIL TO A LEAVING AIR TEMPERATURE OF 21.1 DEGREES C.

HEATING

WHEN IN HEATING MODE, THE UNIT SUPPLY AIR TEMPERATURE CONTROLLER SHALL ENERGIZE REVERSE CYCLE HEATING TO MAINTAIN 21.1 DEGREES C.

DEHUMIDIFICATION

ON A RISE IN SUPPLY AIR RELATIVE HUMIDITY ABOVE THE HUMIDITY SENSOR SET POINT OF 50% RELATIVE HUMIDITY, THE HEAT PUMP UNIT'S REVERSING VALVE SHALL BE POSITIONED FOR COOLING, AND THE UNIT'S HOT GAS BYPASS REFRIGERANT VALVE SHALL BE POSITIONED TO ALLOW HOT GAS REFRIGERANT TO FLOW TO THE REHEAT COIL. THE SET POINT SHALL BE ADJUSTABLE FROM THE DDC CONTROLLER.

SMOKE DETECTOR:

WHEN SMOKE IS DETECTED, AN AUDIO/VISUAL ALARM SHALL BE TRIGGERED IN THE MAIN DDC CONTROL PANEL.

THE UNIT FAN SHALL RUN CONTINUOUSLY WHEN ENABLED BY THE DDC CONTROLS.

CLOSED-CIRCUIT COOLER CONTROLS (CCC-1)

THE COOLER SHALL BE ENABLED BY THE DDC CONTROLLER. PROVIDE CWR TEMPERATURE TRANSMITTER TO ACCOMPLISHED THE FOLLOWING:

ON A RISE IN CWR TEMPERATURE TO 29.4 DEGREES C., THE COOLER'S CLOSURE DAMPERS SHALL OPEN.

ON A RISE IN CWR TEMPERATURE TO 31.1 DEGREES C., THE COOLER'S SPRAY PUMP SHALL BE ENABLED.

ON A RISE IN CWR TEMPERATURE TO 32.2 DEGREES C., THE COOLER'S FAN MOTOR SHALL BE ENABLED AT LOW SPEED.

ON A CONTINUED RISE IN CWR TEMPERATURE, THE COOLER'S FAN MOTOR SHALL SWITCH TO HIGH SPEED.

AN ALARM SHALL BE INDICATED SHOULD ANY FAN MOTOR, OR PUMP MOTOR NOT BE STARTED OR IF, THE CLOSURE DAMPERS DO NOT OPEN FULLY.

CIRCULATING PUMPS CP-1 & CP-2 SHALL RUN CONTINUOUSLY WHEN ENERGIZED BY DDC. ONLY ONE PUMP SHALL RUN AT ANY TIME. PUMP OPERATION SHALL BE ROTATED ON A 48 HOUR SCHEDULE.

SHOULD A LOSS OF FLOW OCCUR WHICH CANNOT BE CORRECTED BY STARTING THE BACK-UP PUMP THE DDC CONTROLLER SHALL TAKE THE HEAT PUMPS, CLOSED CIRCUIT COOLER AND BOILERS OFF LINE AND INDICATE AN ALARM CONDITION.

BOILER AND HEATING WATER PUMPS CONTROLS

PROVIDE A BOILER SEQUENCING CONTROL PANEL TO ANNUNICATED ALARMS TO THE DDC WORKSTATIONS, TO OPERATE BOILERS B-1 & B-2 IN SEQUENCE, START/STOP BOILER PUMPS CP-3 & CP-4 AND MAINTAIN THE HEATING SUPPLY WATER LOOP TEMPERATURE.

A SIGNAL FROM THE DDC SHALL ENERGIZE THE HEATING CONTROLS. BOILER SHALL BE STARTED/ STOPPED BASED ON ROTATING THE LEAD BOILER EVERY 24 HOURS.

THE HEATING SUPPLY WATER TEMPERATURE SHALL BE MAINTAINED AT THE SET-POINT OF THE SEQUENCING PANEL FROM A SIGNAL PROVIDE BY SUPPLY WATER SENSOR/ TRANSMITTER DEVICE. SET-POINT SHALL BE RESET BASED ON OUTSIDE AIR AS FOLLOWS;

OUTSIDE AIR TEMP.	SUPPLY WATER TEMP.
15.6° C.	48.8° C.
5.0° C.	60.0° C.
-5.6° C.	71.1° C.

A CWS TEMPERATURE SENSOR SHALL ALSO BE INCLUDED.

UNIT HEATER CONTROLS

A WALL MOUNTED THERMOSTAT WITH AN "OFF/ON" FAN SWITCH SHALL CYCLE THE FAN TO MAINTAIN ITS SET POINT(20 DEGREES C.) WHEN THE SWITCH IS IN THE "ON" POSITION-FAN MOTOR SHALL START & THE GAS SUPPLY VALVE SHALL OPEN TO PROVIDE HEAT. WHEN THE SWITCH IS IN THE "OFF" POSITION, THE FAN SHALL STOP, AND GAS SUPPLY VALVE SHALL CLOSE.

GAS-FIRED INFRARED TUBE HEATER CONTROLS

A SPACE TEMPERATURE THERMOSTAT, LOCATED AS SHOWN, SHALL ENABLE THE INFRARED TUBE HEATER CONTROLS TO PROVIDE RADIANT HEAT. ONE THERMOSTAT SHALL CONTROL TWO (2) INFRARED TUBE HEATERS AS INDICATED.

PROVIDE SPACE TEMPERATURE SENSORS/ TRANSMITTERS IN HANGAR BAYS (TWO PER HANGAR BAY) TO SIGNAL SPACE TEMPERATURE BACK TO DDC WORKSTATIONS.

ITH-1 AND ITH-11 INFRARED HEATER CONTROL SHALL BE INTERLOCKED WITH BRIDGE CRANE THROUGH LIMIT SWITCHES SUCH THAT LOCAL INFRARED HEATER POWER SHALL BE DISABLED WHEN BRIDGE CRANE PASSES UNDER A HEATER UNIT. ALL INTERLOCK WIRING SHALL BE PROVIDED UNDER ELECTRICAL.

INDOOR AIR QUALITY

IN ROOMS W110, E110 AND W201 PROVIDE INDOOR AIR QUALITY SENSORS. DDC SYSTEM SHALL TREND CARBON DIOXIDE LEVELS AND ON DETECTION OF A HIGH CARBON DIOXIDE CONCENTRATION OF 1000 PARTS PER MILLION, THE DDC CONTROL SYSTEM SHALL ISSUE THE MESSAGE "AIR QUALITY WARNING-HIGH CARBON DIOXIDE CONCENTRATIONS" TO SOFTWARE ALARM POINTS.

EXHAUST FANS CONTROLS

EXHAUST FANS EF-4 AND EF-7 SHALL BE INTERLOCKED WITH ITS RESPECTIVE AREA VENTILATION AIR HEAT PUMPS. WHEN THE HP SUPPLY AIR FAN STARTS, ITS RESPECTIVE AREA EXHAUST FAN SHALL START AND SHALL STOP WHEN SUPPLY AIR FAN STOPS.

EXHAUST FANS EF-1, EF-2, EF-3, EF-5, EF-6, EF-8 AND EF-9 SHALL BE CONTROLLED BY WALL THERMOSTAT WITH OVERRIDE CONTROL BY DDC WORKSTATIONS. THERMOSTAT SHALL ENERGIZE FAN UPON RISE IN SPACE TEMPERATURE ABOVE SET-POINT OF 32.2 DEGREES C., AND DE-ENERGIZE THE FAN UPON TEMPERATURE FALL BELOW SET-POINT.

GAS-FIRED WATER HEATER

SEE SHEET P-001.

HOT WATER RECIRCULATING PUMP

SEE SHEET P-001.

CONTROLS LEGEND

AI	ANALOG INPUT TO DDC/EMCS
AO	ANALOG OUTPUT FROM DDC/EMCS
ATC	AUTOMATIC TEMPERATURE CONTROL
DI	DIGITAL INPUT TO DDC/EMCS
DO	DIGITAL OUTPUT FROM DDC/EMCS
DDC	DIRECT DIGITAL CONTROL
DTC	DATA TERMINAL CABINET
TUC	TERMINAL UNIT CONTROLLER
---	INTERLOCK WIRING
PT	PRESSURE TRANSMITTER
LS	END LIMIT SWITCH
SS	SIGNAL SELECTOR
CP	CONTROL PANEL
EMCS	ENERGY MANAGEMENT CONTROL SYSTEM
T	AVERAGING TEMPERATURE SENSOR
DPT	DIFFERENTIAL PRESSURE TRANSMITTER
HS	HUMIDITY SENSOR
DM	DAMPER ACTUATOR 2-10 VAC SIGNAL OR 2 POSITION AS REQUIRED
MS	MOTOR STARTER
R	RELAY
SD	DUCT MOUNTED SMOKE DETECTOR
SP	STATIC PRESSURE SENSOR
TS	TEMPERATURE SENSOR
TT	TEMPERATURE TRANSMITTER
V	VALVE ACTUATOR 2-10 VAC SIGNAL OR 2 POSITION AS REQUIRED
XMFR	TRANSFORMER
G	GAS METER
W	WATER METER
E	ELECTRIC METER
CS	CURRENT SENSOR
I	INDOOR AIR QUALITY SENSOR

DATE	DESCRIPTION	SYM.	APPR.

GLENN & SADLER
ENGINEERS & ARCHITECTS
a division of TRANSYSTEMS CORPORATION
Town Point Center
150 South Monroe Street, Suite 1000
Norfolk, Virginia 23510 - USA
23510-2838
Phone 757-627-1118
Fax 757-627-1115
www.transystems.com

COMMONWEALTH OF VIRGINIA
Douglas K. Henderson
No. 022397
8/10/01
PROFESSIONAL ENGINEER
SEAL

APPROVED

ACTIVITY - SATISFACTORY TO

DATE

APPROVED
FOR EFD FOR COMMANDER NAVFAC
9/26/01
DATE

A/E		EFD
PEH	DESIGN	
KLB	DRAWN	
DKH	REVIEW	ETC
GTJ	QC	
RDF	CHIEF ARCH / ENGR.	

PROJECT MANAGER
FIRE PROTECTION
BRANCH MANAGER
DESIGN DIRECTOR

DEPARTMENT OF THE NAVY
NAVAL STATION
NAVAL FACILITIES ENGINEERING COMMAND
ATLANTIC DIVISION
NORFOLK, VIRGINIA
NAVAL STATION
CHAMBERS FIELD, NORFOLK, VIRGINIA
P-523
AIRCRAFT MAINTENANCE HANGAR
SEQENCE OF OPERATION

CODE ID NO. 80091 | SIZE D
SCALE. AS NOTED
EFD NO.
STA. PROJ NO. P-523
SPEC NO. 05-00-0101
CONSTR. CONTR. NO
N62470-00-B-0101
NAVFAC DRAWING NO.
4450914
SHEET 227 OF 270
M-803
DRAWFORM REVISION MAY 2000

LP-27 Record Drawings

Bowman, Foster & Associates, P.C.
Consulting Engineers
Norfolk, VA 23502

LEGEND

—HWS—	HOT WATER SUPPLY PIPING
—HWR—	HOT WATER RETURN PIPING
—CWS—	CONDENSER WATER SUPPLY PIPING
—CWR—	CONDENSER WATER RETURN PIPING
—D—	CONDENSATE DRAIN PIPING
	BACKFLOW PREVENTER
	BALANCING VALVE (GLOBE VALVE/SQUARE HEAD COCK)
	GATE VALVE
	CHECK VALVE
	BUTTERFLY VALVE
	STRAINER WITH BLOWDOWN VALVE
	3-WAY AUTO CONTROL VALVE
	PRESSURE REDUCING VALVE
	2-WAY AUTO CONTROL VALVE
	THERMOMETER
	FLEXIBLE PIPING CONNECTION
	PRESSURE GAUGE SHUT-OFF COCK
	AUTOMATIC AIR VENT
	UNION
	PIPE SLOPE (DOWN IN ARROW DIRECTION)
	FLOW CONTROL BALANCING VALVE W/PRESSURE TAPS (L/S NOTED)
	GAS SHUT-OFF COCK
	RELIEF VALVE
	PIPE CAP
	DIRECTION OF FLOW
	THERMOMETER WELL

A 100	GRILLE OR DIFFUSER MARK – SEE SCHEDULE OR SPECIFICATION (L/S NOTED)
	SUPPLY DUCT SECTION
	RETURN OR EXHAUST DUCT SECTION
SA	SUPPLY AIR
RA	RETURN AIR
OA	OUTSIDE AIR
FD	FIRE DAMPER WITH ACCESS DOOR
T	HEATING AND COOLING TEMPERATURE SENSOR, MOUNT 60" ABOVE FLOOR
T V	VENTILATION TEMPERATURE SENSOR, MOUNT 60" ABOVE FLOOR
F	FAN SWITCH–FLUSH MOUNT 54" ABOVE FLOOR
	ELBOW WITH TURNING VANES
SD	SPLITTER DAMPER
BD	MANUAL BALANCING DAMPER W/LOCKING QUADRANT
	FLEXIBLE DUCT CONNECTION
	(AD) ACCESS DOOR
M	MOTORIZED CONTROL DAMPER
S	SMOKE DETECTOR
CP–1A	PUMP MARK–SEE SCHEDULE (SEE SHEET NOTE 1)
EF–1A	EXHAUST FAN MARK–SEE SCHEDULE (SEE SHEET NOTE 1)
HP–1A	HEAT PUMP UNIT MARK–SEE SCHEDULE (SEE SHEET NOTE 1)
CCC–1A	CLOSED CIRCUIT COOLER MARK–SEE SCHEDULE (SEE SHEET NOTE 1)
ITH–1A	INFRARED TUBE HEATER MARK–SEE SCHEDULE (SEE SHEET NOTE 1)
ET–1A	EXPANSION TANK MARK–SEE SCHEDULE (SEE SHEET NOTE 1)
AS–1A	AIR REMOVAL MARK–SEE SCHEDULE (SEE SHEET NOTE 1)
H–1A	HOOD MARK–SEE SCHEDULE (SEE SHEET NOTE 1)
DR–1A	REFRIGERATED AIR DRYER (SEE SHEET NOTE 1)
R–1A	AIR RECEIVER (SEE SHEET NOTE 1)
AC–1A	AIR COMPRESSOR (SEE SHEET NOTE 1)
#	NUMBER
B–1A	BOILER

ABBREVIATIONS

A/C	AIR CONDITIONING
CCC	CLOSED CIRCUIT COOLER
AD	ACCESS DOOR
AFF	ABOVE FINISHED FLOOR
AFG	ABOVE FINISHED GRADE
HP	HEAT PUMP
∡	ANGLE
APD	AIR PRESSURE DROP
APPROX	APPROXIMATELY
BD	BALANCING DAMPER
BDD	BACK DRAFT DAMPER
C	CELCIUS
CDB	CELCIUS DRY BULB
CMU	CONCRETE MASONARY UNIT
CONFIG	CONFIGURATION
COP	COEFICIENT OF PERFORMANCE
CWB	CELCIUS WET BULB
DDC	DIRECT DIGITAL CONTROL
DN	DOWN
DPR	DAMPER
EAT	ENTERING AIR TEMPERATURE
EDB	ENTERING DRY BULB
EWT	ENTERING WATER TEMPERATURE
EWB	ENTERING WET BULB
ESP	EXTERNAL STATIC PRESSURE
EXIST	EXISTING
FD	FIRE DAMPER WITH ACCESS DOOR
FF	FINISHED FLOOR
FLA	FULL LOAD AMPS
GC	GENERAL CONTRACTOR
HOA	HAND–OFF–AUTO
ID	INSIDE DIAMETER
KPa	KILOPASCAL
KW	KILOWATT
Kv	SYSTEM CONSTANT (ALSO CALLED VALVE COEFFICIENT) Kv x 1.17 = Cv
LAT	LEAVING AIR TEMPERATURE
LWB	LEAVING WET BULB
LWT	LEAVING WATER TEMPERATURE
L/S	LITERS PER SECOND
MAX	MAXIMUM
MCA	MAXIMUM CIRCUIT AMPS
MIN	MINIMUM
MFS	MAXIMUM FUSE SIZE
mm	MILLIMETERS
M^2	SQUARE METERS
M/S	METERS PER SECOND
NIC	NOT IN CONTRACT
NOM	NOMINAL
OA	OUTSIDE AIR
OD	OUTSIDE DIAMETER
Pa	PASCAL
PD	PRESSURE DROP
PH	PHASE
PRV	PRESSURE RELIEF VALVE
RA	RETURN AIR
RPM	REVOLUTIONS PER MINUTE
RH	RELATIVE HUMIDITY
RLA	RUN LOAD AMPS
SA	SUPPLY AIR
SP	STATIC PRESSURE
TS	TIP SPEED
T'STAT	THERMOSTAT
TYP	TYPICAL
UG	UNDERGROUND
WPD	WATER PRESSURE DROP
P	PHASE
%	PERCENT

SHEET NOTE

1. THE LETTER AFTER THE EQUIPMENT MARK INDICATES THE HANGAR IN WHICH THE EQUIPMENT TO BE INSTALLED IN;
   "A" – HANGAR P–522
   "B" – HANGAR P–524

REVISIONS

DESCRIPTION	DATE	APPROVED

DWG. DWG2 DESIGN KLB DRAWN RMK REVIEW TTA CC RDE CHIEF ARCH./ ENGR. PROJECT MANAGER JHH FIRE PROTECTION BRANCH MANAGER JPH DESIGN DIRECTOR

GLENN & SADLER
A/E CONTRACT NO. N62470-99-R-3307
JOB ORDER NO. 97K027
APPROVED DATE
ACTIVITY SATISFACTORY TO
APPROVED
FOR RTD FOR COMMENTS MATRL

SEAL: COMMONWEALTH OF VIRGINIA, Richard M. Klein, No. 027864, 10-9-00, PROFESSIONAL ENGINEER

DEPARTMENT OF THE NAVY
NAVAL FACILITIES ENGINEERING COMMAND
ATLANTIC DIVISION
NORFOLK, VIRGINIA
NAVAL STATION
CHAMBERS FIELD, NAVAL STATION, NORFOLK, VIRGINIA
P-522 AND P-524
AIRCRAFT MAINTENANCE HANGARS
LEGEND AND ABBREVIATIONS

CODE ID. NO. 80091 SIZE D
SCALE: NONE
EFD NO.
STA. PROJ. NO. P522/P524
SPEC. NO. 05-98-8027
CONTR. CONTR. NO. N62470-98-B-8027
NAVFAC DRAWING NO. 4429129
SHEET 365 OF 481
M1.1

11/12/99

P:\0926\
80-0027
(X-TBLK)
1=1

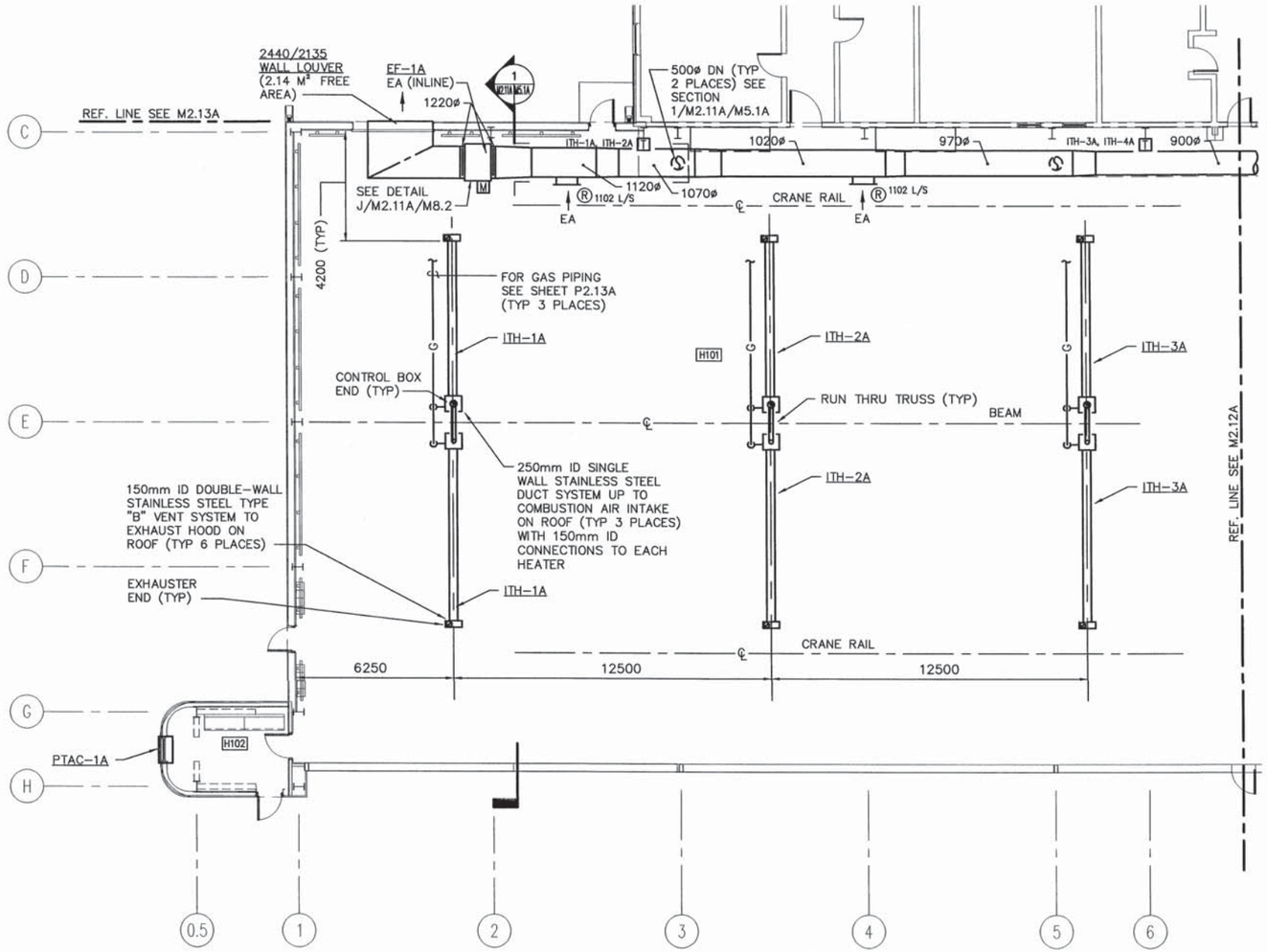

PARTIAL FIRST FLOOR PLAN

SCALE: 1 : 100

NOTES

1. DIMENSIONS ARE IN MILLIMETERS UNLESS NOTED OTHERWISE.
2. LEGEND & ABBREVIATIONS ON SHEET M1.1.
3. EQUIPMENT SCHEDULES ON SHEETS M6.1A THROUGH M6.3A.

PLAN NORTH

KEY PLAN

DIMENSIONS ARE MILLIMETERS.

0 1000 3000 5000

1:100 GRAPHIC SCALE (mm)

Bowman, Foster & Associates, P.C.
Consulting Engineers
Norfolk, VA 23502

SYM.	DESCRIPTION	DATE	APPROVED

REVISIONS

GLENN & SADLER

A/E CONTRACT NO. N62470-99-R-3307
JOB ORDER NO. 976027

DWG2 DESIGN KLB DRAWN RMK REVIEW TLH QC RDF CHIEF ARCH/ ENGR. PROJECT MANAGER FIRE PROTECTION JHH BRANCH MANAGER DESIGN DIRECTOR

ACTIVITY APPROVED
PROGRAM MANAGER
ACTIVITY SATISFACTORY TO
FOR BID FOR COMMANDER NAVFAC

Richard M. Klein
No. 027864
PROFESSIONAL ENGINEER
COMMONWEALTH OF VIRGINIA

DEPARTMENT OF THE NAVY
NAVAL FACILITIES ENGINEERING COMMAND
ATLANTIC DIVISION
NAVAL STATION NORFOLK, VIRGINIA
CHAMBERS FIELD, NAVAL STATION, NORFOLK, VIRGINIA
P-522 AND P-524
AIRCRAFT MAINTENANCE HANGARS
PARTIAL FIRST FLOOR PLAN

CODE ID. NO. 80091 SIZE D
SCALE: AS NOTED
EFD NO.
STA. PROJ. NO. P522/P524
SPEC. NO. 05-98-8027
CONTR. CONTR. NO. N62470-98-B-8027
NAVFAC DRAWING NO. 4429130
SHEET 366 OF 481
M2.11A

P:\9926\
(X-TBLK)
1=1"

PLOTDATE

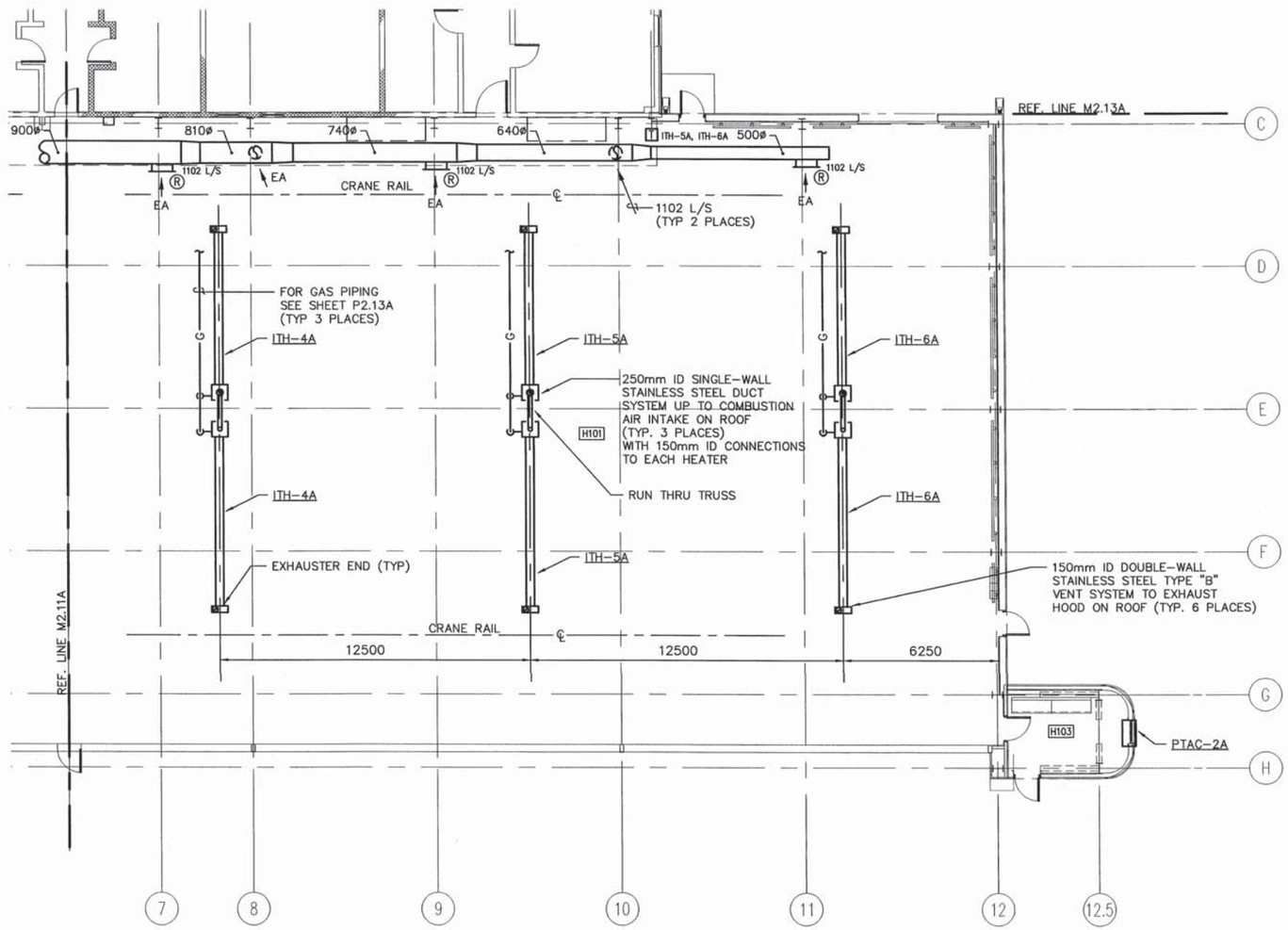

PARTIAL FIRST FLOOR PLAN

SCALE: 1 : 100

Bowman, Foster & Associates, P.C.
Consulting Engineers
Norfolk, VA 23502

NOTES

1. DIMENSIONS ARE IN MILLIMETERS UNLESS NOTED OTHERWISE.
2. LEGEND & ABBREVIATIONS ON SHEET M1.1.
3. EQUIPMENT SCHEDULES ON SHEETS M6.1A THROUGH M6.3A.

PLAN NORTH

KEY PLAN

DIMENSIONS ARE MILLIMETERS.

0 1000 3000 5000

1:100 GRAPHIC SCALE (mm)

SYM.	DESCRIPTION	DATE	APPROVED
	REVISIONS		

DWG 2 DESIGN KLB DRAWN RMK REVIEW TLH QC RDF CHIEF ARCH./ ENGR. PROJECT MANAGER FIRE PROTECTION JJH BRANCH MANAGER VPT DESIGN DIRECTOR

GLENN & SADLER
A/E CONTRACT NO. N62470-99-R-3307
JOB ORDER NO. 99507
APPROVED DATE 11/6/00
ACTIVITY SATISFACTORY
PROGRAM

VIRGINIA Richard M. Klein No. 027664 10-9-00 PROFESSIONAL ENGINEER

DEPARTMENT OF THE NAVY
NAVAL FACILITIES ENGINEERING COMMAND
ATLANTIC DIVISION
NORFOLK, VIRGINIA
NAVAL STATION
CHAMBERS FIELD, NAVAL STATION, NORFOLK, VIRGINIA
P-522 AND P-524
AIRCRAFT MAINTENANCE HANGARS
PARTIAL FIRST FLOOR PLAN

CODE ID. NO. 80091 SIZE D
SCALE: AS NOTED
EFD NO.
STA. PROJ. NO. P522/P524
SPEC. NO. 05-98-8027
CONSTR. CONTR. NO. N62470-98-B-8027
NAVFAC DRAWING NO. 4429131
SHEET 367 OF 481
M2.12A

P:\9926\
(X-TBLK)
1=1"

PLOTDATE

Bowman, Foster & Associates, P.C.
Consulting Engineers
Norfolk, VA 23502

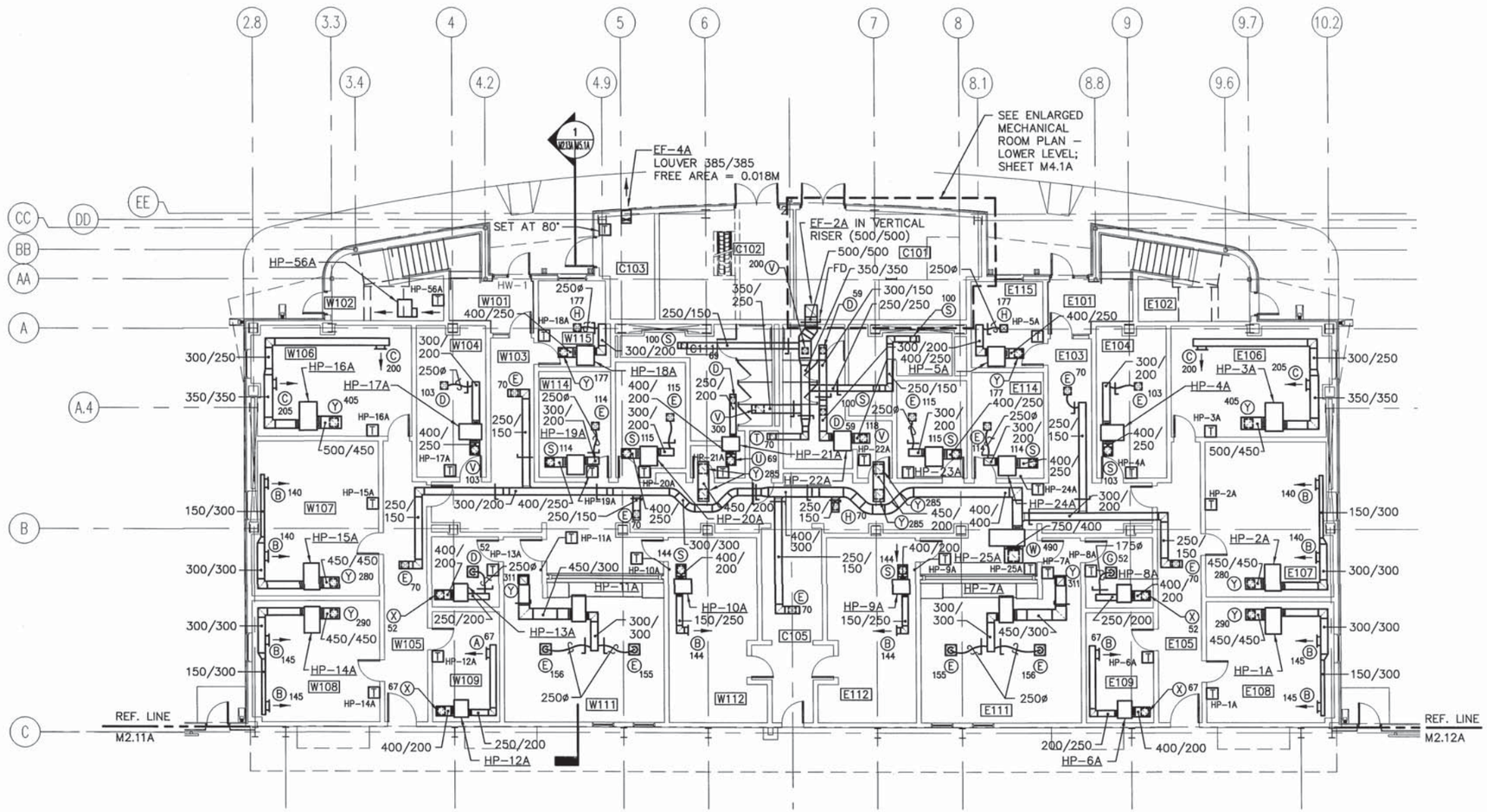

PARTIAL FIRST FLOOR PLAN – DUCTWORK

SCALE: 1 : 100

SHEET NOTES

1. DUCT SIZES ARE IN MILLIMETERS (mm).
2. EQUIPMENT SCHEDULES ON SHEETS M6.1A THROUGH M6.3A.
3. LEGEND & ABBREVIATIONS ON SHEETS M1.1.
4. VENTILATION AIR DUCTWORK & HEAT PUMP PIPING SHOWN ON M3.13A.
5. ALL GRILLE & DIFFUSER LOCATIONS TO BE READ IN CONJUNCTION WITH ARCHITECTS CEILING PLAN.

PLAN NORTH

KEY PLAN

DIMENSIONS ARE MILLIMETERS.

0 1000 3000 5000

1:100 GRAPHIC SCALE (mm)

REVISIONS			
DESCRIPTION	DATE	APPROVED	

DWG DESIGN KLB DRAWN RMK REVIEW TLH
QC — CHIEF ARCH/ ENGR. RDF
PROJECT MANAGER JJH
BRANCH MANAGER JJH
DESIGN DIRECTOR

GLENN & SADLER
A/E CONTRACT NO. N62470-99-R-3307
JOB ORDER NO. 3-26027
APPROVED
ACTIVITY SATISFACTORY
FOR BID FOR COMMENTS WORK
SEAL

COMMONWEALTH OF VIRGINIA
Richard M. Klein
No. 027864
10-18-00
PROFESSIONAL ENGINEER

DEPARTMENT OF THE NAVY
NAVAL FACILITIES ENGINEERING COMMAND
ATLANTIC DIVISION
NORFOLK, VIRGINIA
NAVAL STATION
CHAMBERS FIELD, NAVAL STATION, NORFOLK, VIRGINIA
P-522 AND P-524
AIRCRAFT MAINTENANCE HANGARS
PARTIAL FIRST FLOOR PLAN – DUCTWORK

CODE ID. NO. 80091 SIZE D
SCALE: AS NOTED
EFD NO.
STA. PROJ. NO. P522/P524
SPEC. NO. 05-98-8027
CONTR. NO. N62470-98-B-8027
NAVFAC DRAWING NO. 4429132
SHEET 368 OF 481
M2.13A

P:\9926\
(X-TBLK)
1=1"

PLOTDATE

Bowman, Foster & Associates, P.C.
Consulting Engineers
Norfolk, VA 23502

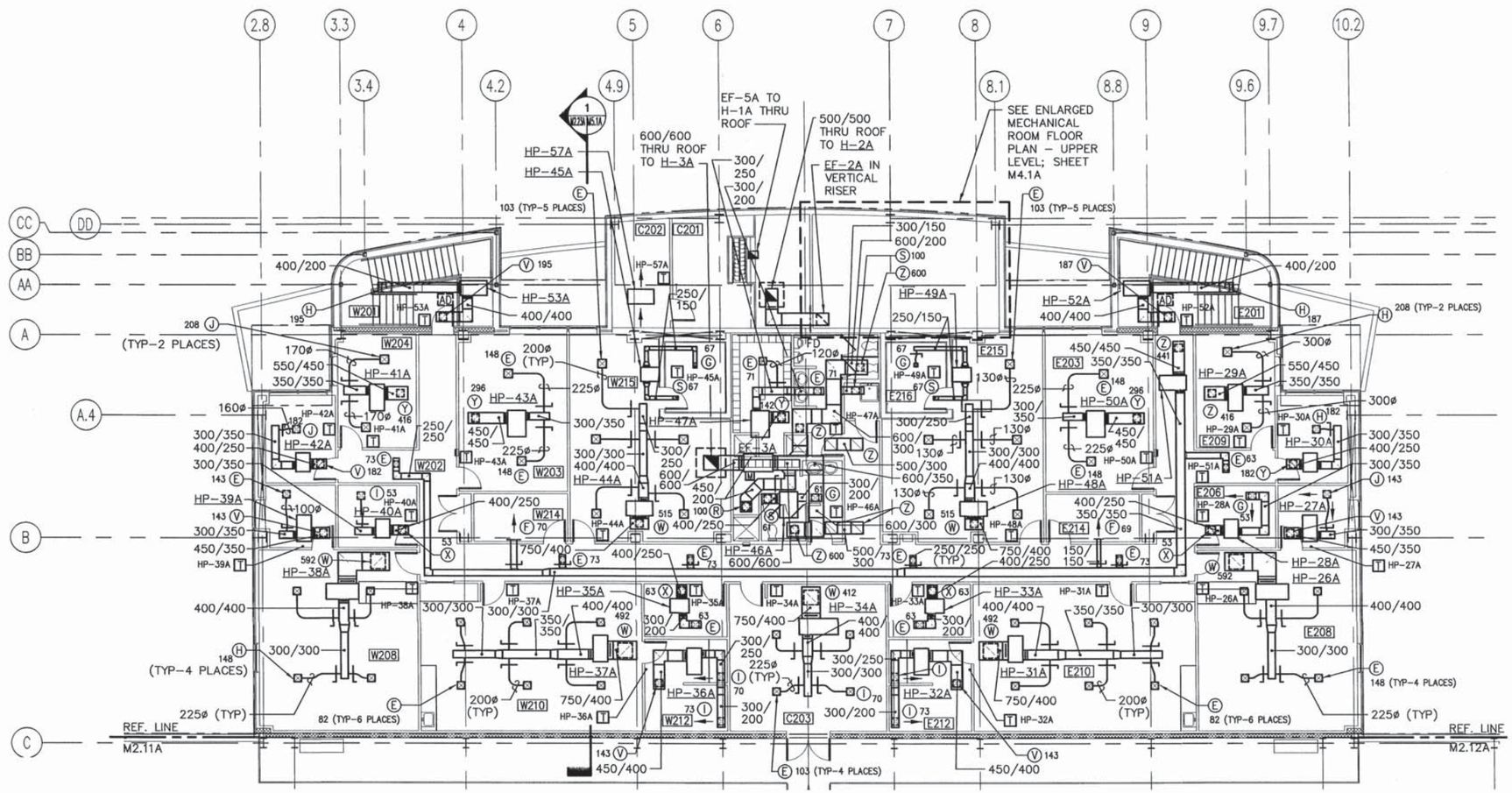

PART SECOND FLOOR PLAN – DUCTWORK

SCALE: 1 : 100

SHEET NOTES

1. DUCT SIZES ARE IN MILLIMETERS (mm).
2. EQUIPMENT SCHEDULES ON SHEETS M6.1A, M6.2A & M6.3A.
3. LEGEND & ABBREVIATIONS ON SHEETS M1.1.
4. VENTILATION AIR DUCTWORK & HEAT PUMP PIPING SHOWN ON M3.23A.
5. ALL GRILLE & DIFFUSER LOCATIONS TO BE READ IN CONJUNCTION WITH ARCHITECT CEILING PLAN.

PLAN NORTH

23
21 22

KEY PLAN

DIMENSIONS ARE MILLIMETERS.

0 1000 3000 5000

1:100 GRAPHIC SCALE (mm)

REVISIONS

DESCRIPTION	DATE	APPROVED

GLENN & SADLER

DWG: PWG2 (DESIGN) KLB (DRAWN) RMK (REVIEW) TLH (QC)

RDF (CHIEF ARCH/ ENGR) JHH (PROJECT MANAGER) VPH (BRANCH MANAGER) (DESIGN DIRECTOR)

A/E CONTRACT NO. N62470-99-R-3307

JOB ORDER NO. 97R027

ACTIVITY: FIRE STA. FIRE PROTECTION PROGRAM

SATISFACTORY: DATE

APPROVED: DATE

COMMANDER NAVFAC

STATE OF VIRGINIA
Richard M. Kohn
No. 027864
10-9-00
PROFESSIONAL ENGINEER

DEPARTMENT OF THE NAVY
NAVAL FACILITIES ENGINEERING COMMAND
ATLANTIC DIVISION
NORFOLK, VIRGINIA

NAVAL STATION
CHAMBERS FIELD, NAVAL STATION, NORFOLK, VIRGINIA

P-522 AND P-524 AIRCRAFT MAINTENANCE HANGARS

PARTIAL SECOND FLOOR PLAN – DUCTWORK

CODE ID. NO. 80091 | SIZE D

SCALE: AS NOTED

EFD NO.

STA. PROJ. NO. P522/P524

SPEC. NO. 05-98-8027

CONSTR. CONTR. NO. N62470-98-B-8027

NAVFAC DRAWING NO. 4429133

SHEET 369 OF 481

M2.23A

11/12/99

F:\9926\ 5-0027C (X-TBLK) 1=1

Bowman, Foster & Associates, P.C.
Consulting Engineers
Norfolk, VA 23502

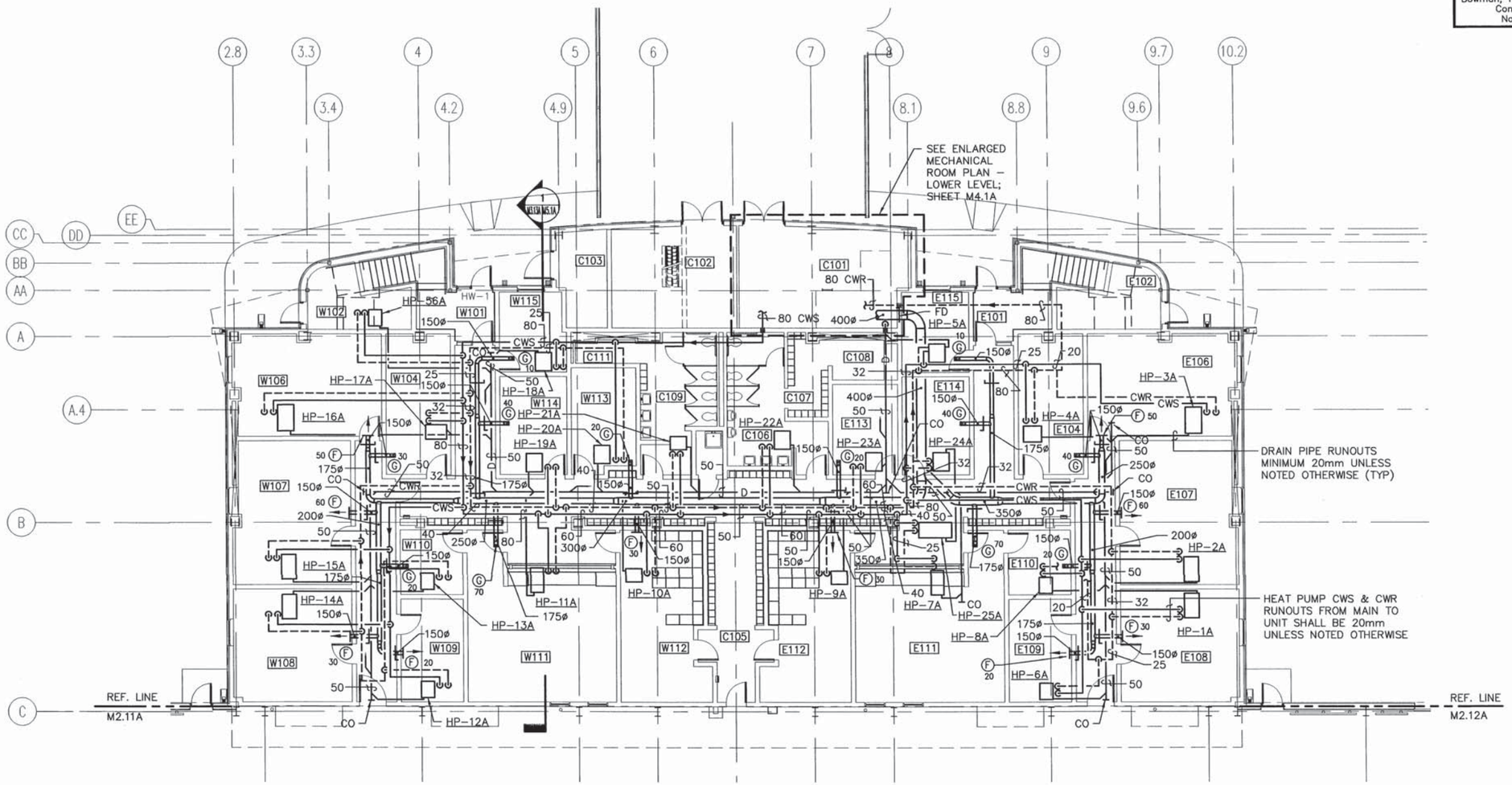

PARTIAL FIRST FLOOR PLAN – PIPING & VENTILATION DUCTWORK

SCALE: 1 : 100

SHEET NOTES

1. DUCT SIZES ARE IN MILLIMETERS (mm).
2. EQUIPMENT SCHEDULES ON SHEETS M6.1A THROUGH M6.3A.
3. LEGEND & ABBREVIATIONS ON SHEETS M1.1.
4. DUCTWORK SHOWN ON M2.13A.

PLAN NORTH

KEY PLAN

DIMENSIONS ARE MILLIMETERS.

0 1000 3000 5000

1:100 GRAPHIC SCALE (mm)

REVISIONS			
DESCRIPTION	DATE	APPROVED	

DWG2 DESIGN KLB DRAWN RMK REVIEW TLH QC RDE CHIEF ARCH/ ENGR. JHH PROJECT MANAGER FIRE PROTECTION JHH BRANCH MANAGER STM DESIGN DIRECTOR

GLENN & SADLER

A/E CONTRACT NO. N62470-99-R-3307 JOB ORDER NO. SUBJECT

APPROVED DATE

ACTIVITY SATISFACTORY

APPROVED 11/3/00

FOR BID FOR COMMENTS WORK

COMMONWEALTH OF VIRGINIA Richard M. Kohl No. 027864 PROFESSIONAL ENGINEER 11-3-00

DEPARTMENT OF THE NAVY — NAVAL FACILITIES ENGINEERING COMMAND — ATLANTIC DIVISION — NORFOLK, VIRGINIA

NAVAL STATION CHAMBERS FIELD, NAVAL STATION, NORFOLK, VIRGINIA

P-522 AND P-524 AIRCRAFT MAINTENANCE HANGARS

PARTIAL FIRST FLOOR PLAN–PIPING & VENTILATION DUCTWORK

CODE ID. NO. 80091 SIZE D

SCALE: AS NOTED

EFD NO.

STA. PROJ. NO. P522/P524

SPEC. NO. 05-98-8027

CONSTR. CONTR. NO. N62470-98-B-8027

NAVFAC DRAWING NO. 4429134

SHEET 370 OF 481

M3.13A

P:\9926\ (X-TBLK) 1=1

PLOTDATE

Bowman, Foster & Associates, P.C.
Consulting Engineers
Norfolk, VA 23502

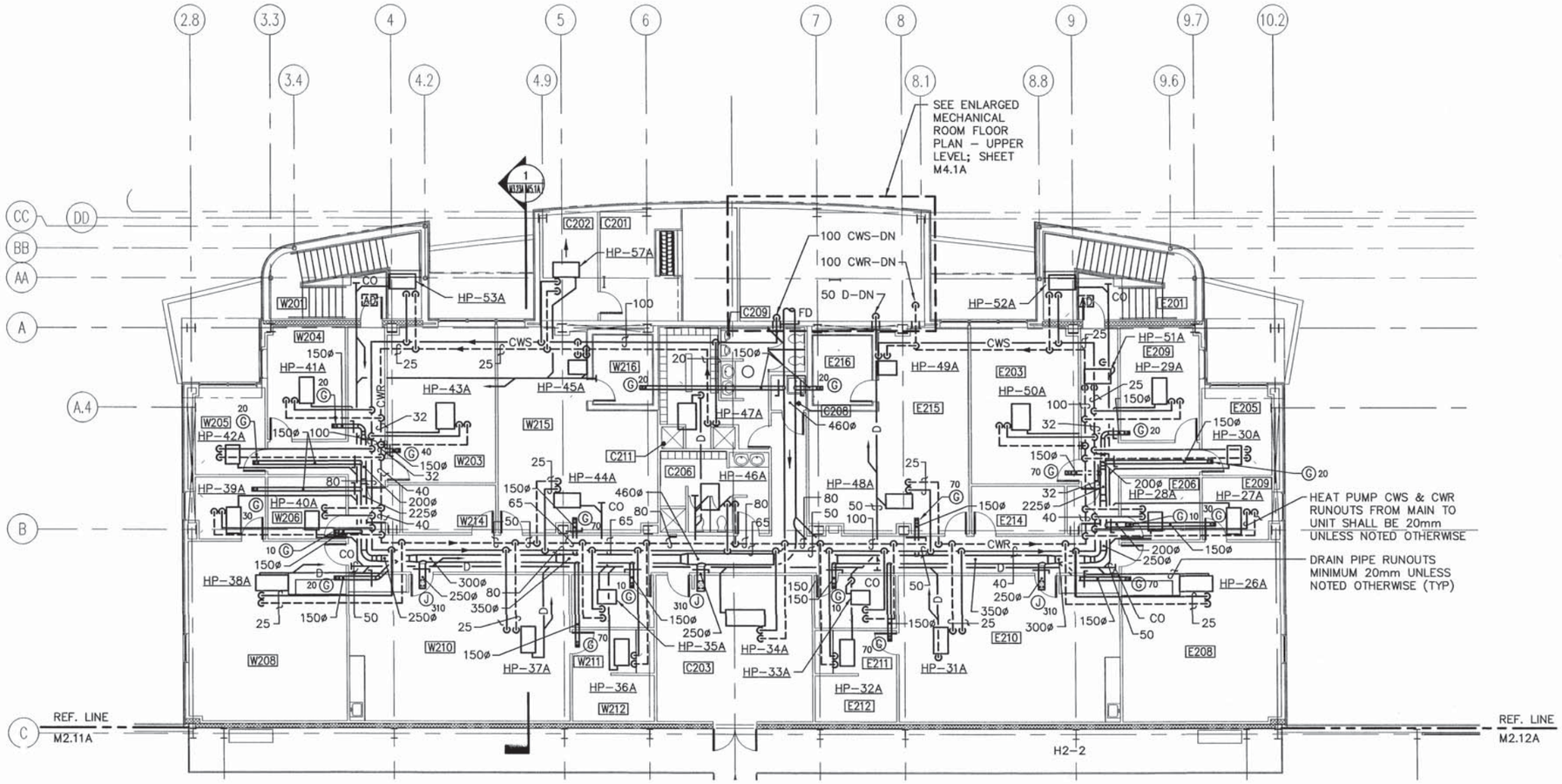

PARTIAL SECOND FLOOR PLAN – PIPING & VENTILATION AIR DUCTWORK

SCALE: 1 : 100

SHEET NOTES

1. DUCT SIZES ARE IN MILLIMETERS (mm).
2. EQUIPMENT SCHEDULES ON SHEETS M6.1A, M6.2A & M6.3A.
3. LEGEND & ABBREVIATIONS ON SHEETS M1.1.
4. DUCTWORK SHOWN ON M2.23A.

PLAN NORTH

23
21 22

KEY PLAN

DIMENSIONS ARE MILLIMETERS.

0 1000 3000 5000

1:100 GRAPHIC SCALE (mm)

REVISIONS

DESCRIPTION	DATE	APPROVED

GLENN & SADLER

A/E CONTRACT NO. N62470-99-R-3307

DWG2 KLB RMK TLH RDF JJH

ACTIVITY SATISFACTORY TO

ATLANTIC DIVISION
NAVAL FACILITIES ENGINEERING COMMAND
NORFOLK, VIRGINIA

CHAMBERS FIELD, NAVAL STATION, NORFOLK, VIRGINIA
P-522 AND P-524
AIRCRAFT MAINTENANCE HANGARS
PARTIAL SECOND FLOOR PLAN – PIPING & DUCTWORK

CODE ID. NO. 80091 SIZE D
SCALE: AS NOTED
EFD NO.
STA. PROJ. NO. P522/P524
SPEC. NO. 05-98-8027
CONSTR. CONTR. NO. N62470-98-B-8027
NAVFAC DRAWING NO. 4429135
SHEET 371 OF 481

M3.23A

P:\9926\
85002
(X-TBLK)
1=1"

11/12/99

Bowman, Foster & Associates, P.C.
Consulting Engineers
Norfolk, VA 23502

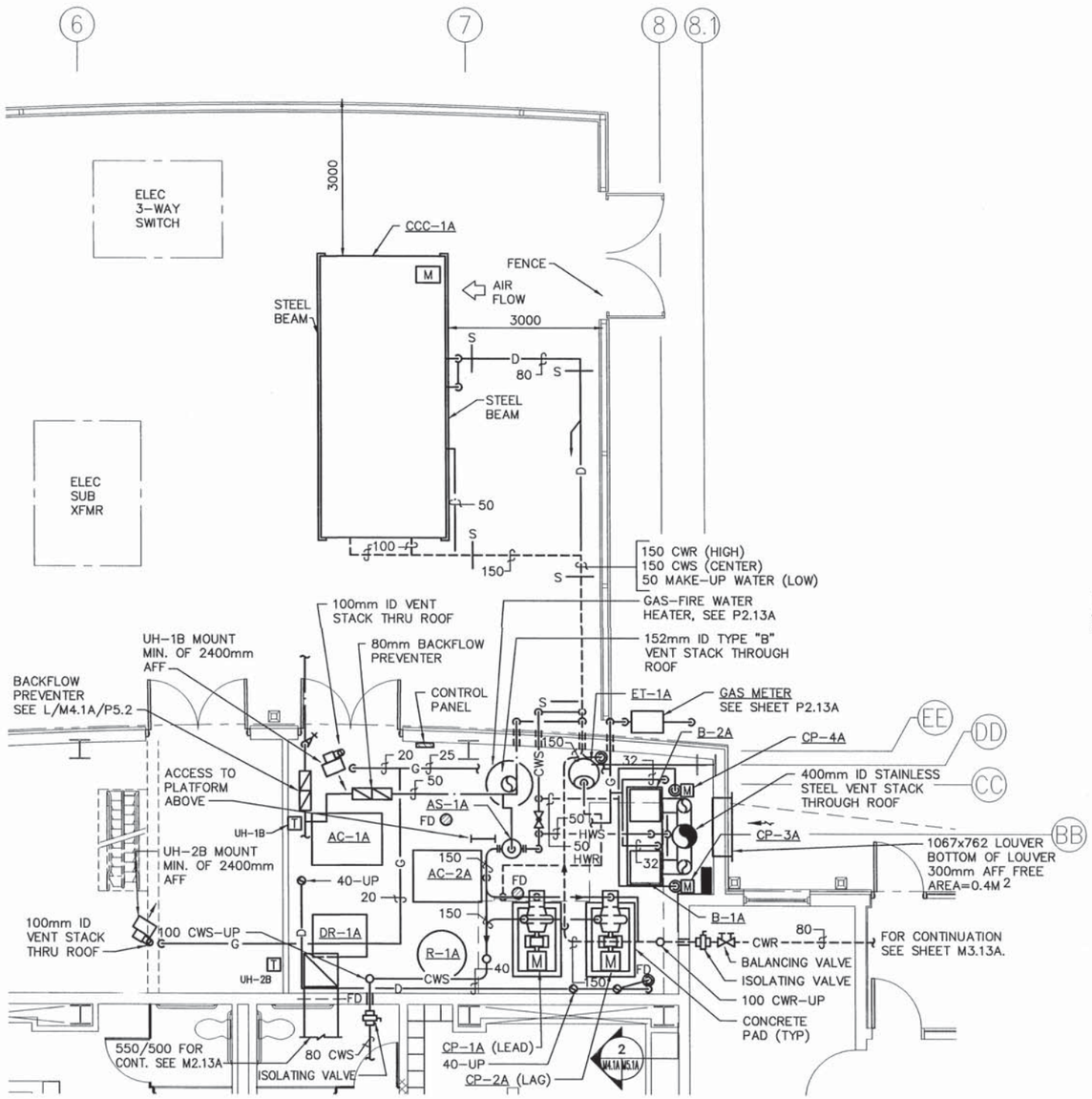

ENLARGED MECHANICAL ROOM PLAN – LOWER LEVEL

SCALE: 1:50

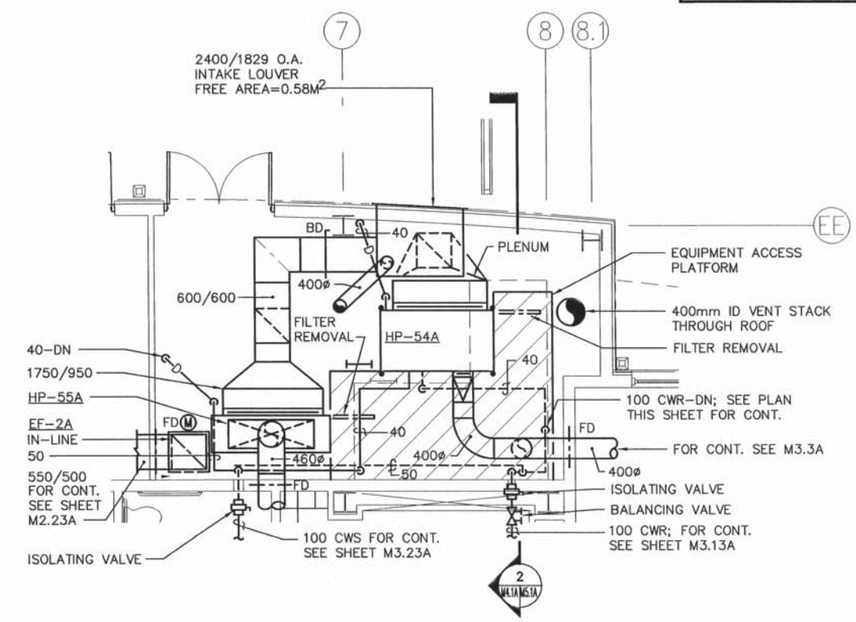

ENLARGED MECHANICAL ROOM PLAN – UPPER LEVEL

SCALE: 1:50

NOTES

1. DIMENSIONS ARE IN MILLIMETERS UNLESS NOTED OTHERWISE.
2. LEGEND & ABBREVIATIONS ON SHEET M1.1.
3. EQUIPMENT SCHEDULES ON SHEETS M6.1A THROUGH M6.3A.

PLAN NORTH

KEY PLAN

DIMENSIONS ARE MILLIMETERS.

0 1000 1500

1:50 GRAPHIC SCALE (mm)

REVISIONS

SYM.	DESCRIPTION	DATE	APPROVED

DWG. DWG2 DESIGN KLB DRAWN RMK REVIEW TLH

GLENN & SADLER A/E CONTRACT NO. N62470-98-R-3307 JOB ORDER NO. 97R027 APPROVED

QC RDE CHIEF ARCH / ENGR. PROJECT MANAGER SHW FIRE PROTECTION BRANCH MANAGER JPH DESIGN DIRECTOR

ACTIVITY SATISFACTORY

APPROVED FOR ETD, ETP, ENGINEERING MANAGER

SEAL: COMMONWEALTH OF VIRGINIA Richard M. Klein No. 027864 10-9-00 PROFESSIONAL ENGINEER

DEPARTMENT OF THE NAVY — NAVAL FACILITIES ENGINEERING COMMAND — ATLANTIC DIVISION — NORFOLK, VIRGINIA

NAVAL STATION CHAMBERS FIELD, NAVAL STATION, NORFOLK, VIRGINIA

P-522 AND P-524 AIRCRAFT MAINTENANCE HANGARS

ENLARGED MECHANICAL ROOM PLANS

CODE ID. NO. 80091 SIZE D

SCALE: AS NOTED

ETD NO.

STA. PROJ. NO. P522/P524

SPEC. NO. 05-98-8027

CONSTR. CONTR. NO. N62470-98-B-8027

NAVFAC DRAWING NO. 4429136

SHEET 372 OF 481

M4.1A

P:\9926\ (X-TBLK) 1=1"

PLOTDATE

Bowman, Foster & Associates, P.C.
Consulting Engineers
Norfolk, VA 23502

NOTES

1. DIMENSIONS ARE IN MILLIMETERS UNLESS NOTED OTHERWISE.
2. LEGEND & ABBREVIATIONS ON SHEET M1.1.
3. EQUIPMENT SCHEDULES ON SHEETS M6.1A THROUGH M6.3A.

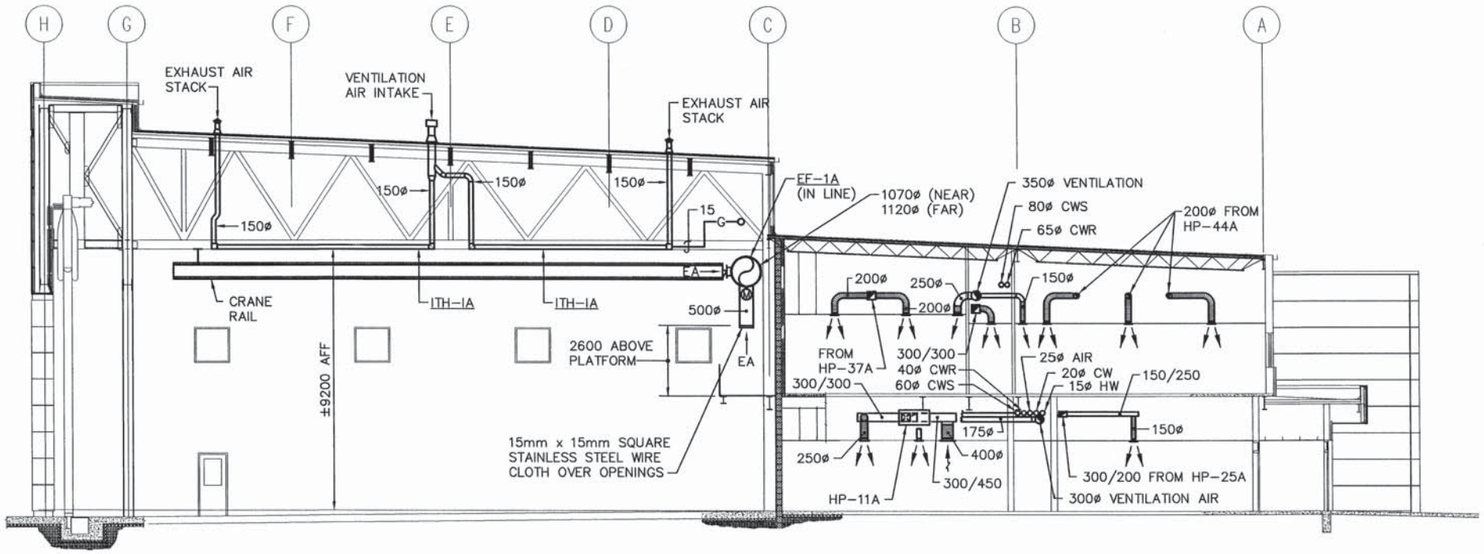

SECTION

SCALE: 1:100

1
M2.13A, M2.23A, M3.13A, M3.23A, M2.11A M5.1A

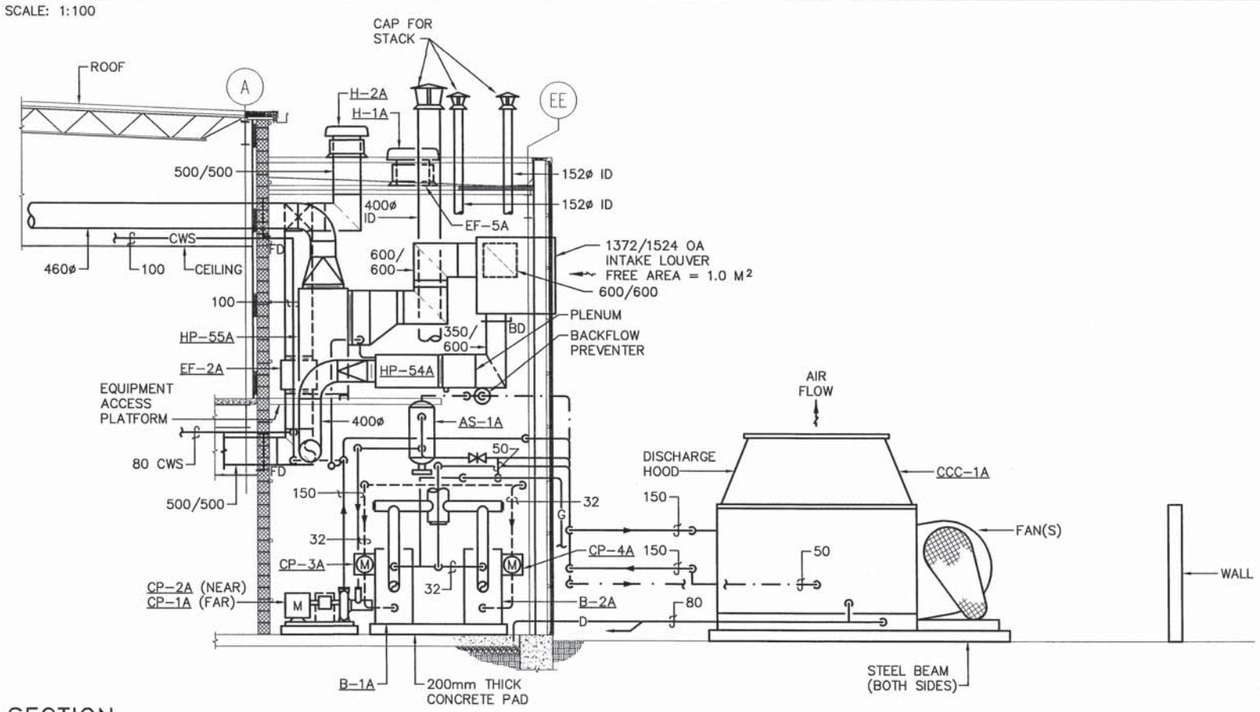

SECTION

SCALE: 1:50

2
M4.1A M5.1

PLAN NORTH

KEY PLAN

DIMENSIONS ARE MILLIMETERS.

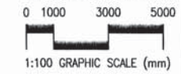

1:100 GRAPHIC SCALE (mm)

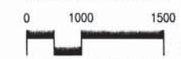

1:50 GRAPHIC SCALE (mm)

REVISIONS				
SYM.	DESCRIPTION	DATE	APPROVED	

DWG. DWG2 DESIGN KLB DRAWN RMK REVIEW TLH
QC RDE CHIEF ARCH./ ENGR.
PROJECT MANAGER JHH
FIRE PROTECTION
BRANCH MANAGER VPM
DESIGN DIRECTOR

GLENN & SADLER
A/E CONTRACT NO. N62470-99-R-3307
JOB ORDER NO. 97R027
APPROVED
DATE
ACTIVITY SATISFACTORY
APPROVED
CINC ATL DIV COMMANDER NAVFAC

COMMONWEALTH OF VIRGINIA
Richard W. Klein
No. 027864
PROFESSIONAL ENGINEER
10-9-00

DEPARTMENT OF THE NAVY
NAVAL STATION
NAVAL FACILITIES ENGINEERING COMMAND
ATLANTIC DIVISION
NORFOLK, VIRGINIA
NAVAL STATION, NORFOLK, VIRGINIA
CHAMBERS FIELD,
P-522 AND P-524
AIRCRAFT MAINTENANCE HANGARS
SECTIONS

CODE ID. NO. 80091 SIZE D
SCALE: AS NOTED
EFD. NO.
STA. PROJ. NO. P522/P524
SPEC. NO. 05-98-8027
CONSTR. CONTR. NO. N62470-98-B-8027
NAVFAC DRAWING NO. 4429137
SHEET 373 OF 481
M5.1A

P:\9926\
(X-TBLK)
1=1"

PLOTDATE

HEAT PUMP SCHEDULE – WATER TO AIR

MARK	FAN DATA AIR FLOW L/S	FAN DATA ESP Pa	FAN DATA MOTOR KW	VENT AIR L/S	WATER FLOW L/S	COOLING DATA (NOTE 1) TOTAL KW	COOLING DATA SENSIBLE KW	EAT CDB	EAT CWB	LAT CBD	LAT CWB	HEATING TOTAL KW (NOTE 2)	HEAT OF ABSORPTION KW	ELECTRICAL SERVICE TOTAL FLA	MCA	MFS	VOLTS	PH	WPD kPa	FILTER AREA SM	TYPE	BALANCING VALVE SIZE	BALANCING VALVE Cv	REMARKS
HP-1A	290	124	0.19	30	0.30	4.6	3.8	23.9	17	13.6	12.4	2	7	9.3	11.2	15	277	1	58	0.21	HORIZ.	20	2.95	
HP-2A	289	124	0.19	60	0.30	5.8	4.3	23.9	17	13.6	12.4	2.4	7	9.3	11.2	15	277	1	58	0.21	HORIZ.	20	2.9	
HP-3A	405	100	0.19	50	0.30	7.4	6.2	23.9	17	13.6	12.3	2.7	10	5.2	6.3	15	480	3	41	0.26	HORIZ.	20	2.9	
HP-4A	103	149	0.07	30	0.44	2.5	1.7	23.9	17	10.4	9.2	1	3	4.15	5	15	277	1	20	0.10	HORIZ.	25	4.33	
HP-5A	177	50	0.07	10	0.15	2.3	2	23.9	17	14.7	13.1	0.9	3	4.15	5	15	277	1	20	0.10	HORIZ.	15	1.47	
HP-6A	67	149	0.07	20	0.15	1.4	0.9	23.9	17	12.8	12.0	0.9	3	3.75	4.5	15	277	1	11	0.10	HORIZ.	15	1.47	
HP-7A	311	124	0.19	70	0.12	6.6	4.8	23.9	17	11.4	10.4	2.8	8	9.8	11.2	15	277	1	31	0.26	HORIZ.	15	1.18	
HP-8A	52	124	0.07	20	0.37	1.1	0.7	23.9	17	12.8	11.7	0.6	3	3.75	4.5	15	277	1	11	0.10	HORIZ.	25	3.64	
HP-9A	144	100	0.07	30	0.12	2.9	2.2	23.9	17	11.7	10.7	1.3	3	3.75	4.5	15	277	1	11	0.10	HORIZ.	15	1.18	
HP-10A	144	100	0.07	30	0.12	2.9	2.2	23.9	17	11.7	10.7	1.3	3	3.75	4.5	15	277	1	11	0.10	HORIZ.	15	1.18	
HP-11A	311	124	0.19	70	0.12	6.6	4.8	23.9	17	11.4	10.4	2.8	8	9.8	11.2	15	277	1	31	0.26	HORIZ.	15	1.18	
HP-12A	67	149	0.07	20	0.37	1.4	0.9	23.9	17	12.8	12.0	0.9	3	3.75	4.5	15	277	1	11	0.10	HORIZ.	25	3.64	
HP-13A	52	124	0.07	20	0.12	1.1	0.7	23.9	17	12.8	11.7	0.6	3	3.75	4.5	15	277	1	11	0.10	HORIZ.	15	1.18	
HP-14A	290	124	0.19	30	0.12	4.3	3.6	23.9	17	13.9	12.6	2	7	9.3	11.2	15	277	1	58	0.26	HORIZ.	15	1.18	
HP-15A	280	124	0.19	60	0.30	5.4	4.1	23.9	17	12	11.0	2.4	7	9.3	11.2	15	277	1	58	0.21	HORIZ.	20	2.95	
HP-16A	405	137	0.19	50	0.30	6.7	5.4	23.9	17	13.1	12.0	2.7	10	5.2	6.3	15	277	3	41	0.26	HORIZ.	20	2.95	
HP-17A	103	149	0.07	30	0.44	2.5	1.7	23.9	17	10.4	9.2	1	3	4.15	5	15	277	1	20	0.10	HORIZ.	25	4.33	
HP-18A	177	50	0.07	10	0.15	2.3	2	23.9	17	14.7	13.1	0.9	3	4.15	5	15	277	1	20	0.10	HORIZ.	15	1.47	
HP-19A	114	137	0.07	40	0.15	2.5	1.6	23.9	17	12.8	11.7	1.3	3	4.15	5	15	277	1	20	0.10	HORIZ.	15	1.47	
HP-20A	115	137	0.07	20	0.15	2.1	1.6	23.9	17	12.4	11.3	0.9	3	4.15	5	15	277	1	20	0.10	HORIZ.	15	1.47	
HP-21A	69	149	0.07	40	0.12	1.7	0.9	23.9	17	12.8	12.0	1.6	3	3.75	4.5	15	277	1	11	0.10	HORIZ.	15	1.18	
HP-22A	118	124	0.07	80	0.15	2.9	1.5	23.9	17	12.8	12.1	3.1	3	4.15	5	15	277	1	20	0.10	HORIZ.	15	1.47	
HP-23A	115	137	0.07	30	0.15	2.3	1.5	23.9	17	12.8	11.7	1	3	4.15	5	15	277	1	20	0.10	HORIZ.	15	1.47	
HP-24A	114	137	0.07	20	0.15	2.5	1.6	23.9	17	12.8	11.7	1.3	3	4.15	5	15	277	1	20	0.10	HORIZ.	15	1.47	
HP-25A	490	162	0.37	0	0.54	3.4	3.4	23.9	17	18.3	17.5	0	12	7	8.3	15	480	3	28	0.35	HORIZ.	25	5.31	
HP-26A	592	124	0.37	70	0.66	9.6	7.9	23.9	17	13.3	12.1	3.5	15	7.6	9	15	480	3	42	0.35	HORIZ.	32	6.49	
HP-27A	143	149	0.07	30	0.24	2.8	2	23.9	17	12.5	11.0	1.3	5	6.65	8.1	15	277	1	37	0.10	HORIZ.	20	2.36	
HP-28A	53	149	0.07	10	0.12	1	0.8	23.9	17	12.3	11.0	0.3	3	3.75	4.5	15	277	1	11	0.10	HORIZ.	15	1.18	
HP-29A	416	137	0.19	20	0.44	5	4.5	23.9	17	15.2	13.4	1.5	10	5.2	6.3	15	480	3	41	0.23	HORIZ.	25	4.33	
HP-30A	182	75	0.07	20	0.19	2.7	2.2	23.9	17	14	12.5	0.9	4	4.85	5.9	15	277	1	33	0.10	HORIZ.	15	1.87	
HP-31A	492	149	0.37	310	0.66	12.3	6.8	23.9	17	12.8	12.0	10.7	15	7.6	9	15	480	3	42	0.35	HORIZ.	32	6.49	
HP-32A	143	149	0.07	70	0.24	3.3	2	23.9	17	12.8	12.0	2.5	5	6.65	8.1	15	277	1	37	0.21	HORIZ.	20	2.36	
HP-33A	63	137	0.07	10	0.12	1.1	0.9	23.9	17	12.8	11.5	0.4	3	3.75	4.5	15	277	1	11	0.10	HORIZ.	15	1.18	
HP-34A	412	137	0.19	360	0.44	11.4	5.7	23.9	17	12.8	11.9	12.1	10	5.2	6.3	15	480	3	41	0.23	HORIZ.	25	4.33	
HP-35A	63	137	0.07	10	0.12	1.1	0.9	23.9	17	12.8	11.5	0.4	3	3.75	4.5	15	277	1	11	0.10	HORIZ.	15	1.18	
HP-36A	143	149	0.07	70	0.24	3.3	2	23.9	17	12.8	12.0	2.5	5	6.65	8.1	15	277	1	37	0.21	HORIZ.	20	2.36	
HP-37A	492	149	0.37	310	0.66	12.3	6.8	23.9	17	12.8	12.0	10.7	15	7.6	9	15	480	3	42	0.35	HORIZ.	32	6.49	
HP-38A	560	144	0.37	70	0.66	8.8	7.3	23.9	17	13.5	12.2	3.5	15	7.6	9	15	480	3	42	0.35	HORIZ.	32	6.49	
HP-39A	143	137	0.07	30	0.15	2.5	1.9	23.9	17	11.4	10.5	1.3	3	4.15	5	15	277	1	20	0.10	HORIZ.	15	1.47	
HP-40A	53	149	0.07	10	0.12	1	0.8	23.9	17	12.3	11.0	0.3	3	3.75	4.5	15	277	1	11	0.10	HORIZ.	15	1.18	
HP-41A	416	124	0.19	20	0.37	4.2	3.7	23.9	17	15	13.2	1.5	8	9.8	11.2	15	277	1	31	0.26	HORIZ.	25	3.64	
HP-42A	182	80	0.07	20	0.12	2.5	2.1	23.9	17	13.5	12.2	0.9	3	3.75	4.5	15	277	1	11	0.10	HORIZ.	15	1.18	
HP-43A	296	112	0.19	40	0.30	4.8	3.8	23.9	17	13.6	12.1	1.7	7	9.3	11.2	15	277	1	58	0.21	HORIZ.	20	2.95	
HP-44A	515	169	0.37	70	0.66	8.5	6.7	23.9	17	13.3	11.9	3	15	7.6	9	15	480	3	42	0.35	HORIZ.	32	6.49	
HP-45A	67	136	0.07	20	0.12	1.4	0.9	23.9	17	12.8	12.0	0.8	3	3.75	4.5	15	277	1	11	0.10	HORIZ.	15	1.18	
HP-46A	61	137	0.07	30	0.12	1.4	0.8	23.9	17	12.8	12.0	0.8	3	3.75	4.5	15	277	1	11	0.10	HORIZ.	15	1.18	
HP-47A	142	149	0.07	0	0.24	3.4	1.9	23.9	17	12.8	12.0	3.1	5	6.65	8.1	15	277	1	37	0.21	HORIZ.	20	2.36	
HP-48A	515	169	0.37	70	0.66	8.5	6.7	23.9	17	13.3	11.9	3	15	7.6	9	15	480	3	42	0.35	HORIZ.	32	6.49	
HP-49A	67	137	0.07	20	0.12	1.4	0.9	23.9	17	12.8	12.0	0.8	3	3.75	4.5	15	277	1	11	0.10	HORIZ.	15	1.18	
HP-50A	296	112	0.19	40	0.30	4.8	3.8	23.9	17	13.6	12.1	1.7	7	9.3	11.2	15	277	1	58	0.21	HORIZ.	20	2.95	
HP-51A	441	137	0.19	0	0.44	3	3	23.9	17	18.3	17.5	0.6	10	5.2	6.3	15	480	3	41	0.23	HORIZ.	25	4.33	
HP-52A	187	75	0.07	0	0.19	1.3	1.3	23.9	17	18.3	17.5	1	4	4.85	5.9	15	277	1	33	0.10	HORIZ.	15	1.87	
HP-53A	195	137	0.07	0	0.24	1.4	1.4	23.9	17	18.3	17.5	1	5	6.65	8.1	15	277	1	21	0.21	HORIZ.	20	2.36	
HP-54A	870	248	2.24	870	1.63	37.9	11.8	32.8	24.4	12.8	12.8	32.4	50	23.7	26.1	35	480	3	26.2	1.05	HORIZ.	40	16.04	SEE NOTE 3
HP-55A	1700	248	2.24	1730	3.22	74.7	22.9	32.8	24.4	12.8	12.8	63.2	99	53.2	58.3	70	480	3	17.3	1.76	VERTICAL	50	31.69	SEE NOTE 3
HP-56A	70	149	0.07	0	0.37	1.4	0.9	32.7	24.4	12.8	12.0	0.9	3	3.75	4.5	15	277	1	11	1.10	HORIZ.	25	3.64	FREE BLOW
HP-57A	412	137	0.19	360	0.44	11.4	5.7	23.9	17	12.8	11.9	12.1	10	5.2	6.3	15	480	3	41	0.23	HORIZ.	25	4.33	

NOTES:
1. BASED ON 29.4 0 C. ENTERING WATER TEMPERATURE.
2. BASED ON 22.1 0 C. ENTERING WATER TEMPERATURE.
3. PROVIDE FACTORY INSTALLED HOT GAS REHEAT OPTION.

Bowman, Foster & Associates, P.C.
Consulting Engineers
Norfolk, VA 23502

REVISIONS

GLENN & SADLER
A/E CONTRACT NO. N62470-99-R-3307
DWG2 DESIGN · KLB DRAWN · RMK REVIEW · TLH · RDF CHIEF ARCH./ENGR. · JHH · SMM
Richard M. Klein No. 027864 10-9-00 PROFESSIONAL ENGINEER, COMMONWEALTH OF VIRGINIA

DEPARTMENT OF THE NAVY NAVAL FACILITIES ENGINEERING COMMAND
ATLANTIC DIVISION NORFOLK, VIRGINIA
NAVAL STATION
CHAMBERS FIELD, NAVAL STATION, NORFOLK, VIRGINIA
P-522 AND P-524
AIRCRAFT MAINTENANCE HANGARS
SCHEDULE

CODE ID. NO. 80091 SIZE D
SCALE: NONE
EFD NO.
STA. PROJ. NO. P522/P524
SPEC. NO. 05-98-8027
CONSTR. CONTR. NO. N62470-98-B-8027
NAVFAC DRAWING NO. 4429138
SHEET 374 OF 481
M6.1A

P:\9926\95000??\(X-TBLK)\1=1"
11/12/99

Bowman, Foster & Associates, P.C.
Consulting Engineers
Norfolk, VA 23502

HVAC DESIGN CONDITIONS

CONDITIONED AREA	INDOORS SUMMER °CDB	INDOORS SUMMER %RH	INDOORS WINTER °CDB	OUTDOORS SUMMER °CDB	OUTDOORS SUMMER MEAN COINCIDENT °CWB	OUTDOORS WINTER °C DB
ADMIN\OFFICE	23.89	50	20	31.67	24.4	−5.6
HANGAR BAY	–	–	20	–	–	−5.6
STORAGE	–	–	12.78	–	–	−5.6

GAS–FIRED INFRARED TUBE HEATER SCHEDULE

MARK	HEATER INPUT KW	TUBE LENGTH mm	MIN. VENT AIR L/S	CONNECTION SIZES mm GAS	CONNECTION SIZES mm FLUE	CONNECTION SIZES mm OA	BURNER/DRAFT INDUCER DATA FUEL	BURNER PRESSURE Pa	SUPPLY PRESSURE Pa MIN.	SUPPLY PRESSURE Pa MAX.	ELECTRICAL SERVICE	ELECTRICAL AMPS	TYPE IGNITION	MOUNTING HEIGHT mm	REMARKS
ITH–1A	21.98	7620	142	15	150	150	NAT GAS	871	1244	3483	120/1/60	2.6	DIRECT SPARK	9500	
ITH–2A	21.98	7620	142	15	150	150	NAT GAS	871	1244	3483	120/1/60	2.6	DIRECT SPARK	9500	
ITH–3A	21.98	7620	142	15	150	150	NAT GAS	871	1244	3483	120/1/60	2.6	DIRECT SPARK	9500	
ITH–4A	21.98	7620	142	15	150	150	NAT GAS	871	1244	3483	120/1/60	2.6	DIRECT SPARK	9500	
ITH–5A	21.98	7620	142	15	150	150	NAT GAS	871	1244	3483	120/1/60	2.6	DIRECT SPARK	9500	
ITH–6A	21.98	7620	142	15	150	150	NAT GAS	871	1244	3483	120/1/60	2.6	DIRECT SPARK	9500	

DUCT CONSTRUCTION AND LEAK TEST SCHEDULE

MARK	DUCT PRESSURE CLASS SUPPLY DUCT Pa	RETURN DUCT Pa	EXHAUST DUCT Pa	OUTSIDE AIR DUCT Pa	DUCT SEAL CLASS	DUCT LEAK CLASS L/S–M²	DUCT TEST PRESSURE	DUCT TEST TYPE	REMARKS
HEAT PUMPS (HP'S)	746				B	0.31	②	①	
EF–1A THRU EF–3A			−248.4		C	1.22			

① TEST PER SHEET METAL & AIR CONDITIONING CONTRACTORS' NATIONAL ASSOCIATION (SMACNA) HVAC AIR DUCT LEAKAGE TEST MANUAL.

② DUCT PRESSURE CLASS.

EXHAUST FAN SCHEDULE

MARK	TYPE	AIR FLOW L/S	ESP Pa	MAX TS M/S	MOTOR KW	FAN RPM	ELECTRIC SERVICE VOLTS	PH	NEMA MOTOR STARTER SIZE	TYPE	DRIVE	BACKDRAFT DAMPER	REMARKS
EF–1A	INLINE CENTRIFIGAL	10,270	250	35.7	7.46	635	480	3	1	AUTO	BELT	YES	①
EF–2A	INLINE CENTRIFIGAL	870	188	25.2	0.37	1300	480	3	00	AUTO	BELT	YES	①
EF–3A	INLINE CENTRIFIGAL	1,700	156	26.8	0.75	1090	480	3	00	AUTO	BELT	YES	①
EF–4A	SIDEWALL PROPELLER	192	100	–	.015	1550	120	1	00	AUTO	DIRECT	YES	①②
EF–5A	INLINE CENTRIFIGAL	1225	100	–	.015	1550	120	1	00	AUTO	DIRECT	YES	①②③

NOTES
1. PROVIDE WITH BELT GUARD, VIBRATION ISOLATORS, MOTOR STARTER & AUTOMATIC GRAVITY–OPERATED BACKDRAFT DAMPER.
2. WALL MOUNTING ENCLOSURE.
3. CONTROL WITH THE THREMOSTAT.

GAS FIRED HOT WATER BOILER SCHEDULE

MARK	FUEL	INPUT KW	OUTPUT KW	BOILER KW	MIN. THERMAL EFFICIENCY PERCENT	LWT °C	EWT °C	FLUE SIZE mm	BURNER MOTOR KW	ELECTRICAL SERVICE VOLTS	PH	AMPS	REMARKS
B–1A	NAT GAS	205.1	174.4	173.6	85	82.2	71.1	250	.25	120	1	8.0	
B–2A	NAT GAS	205.1	174.4	173.6	85	82.2	71.1	250	.25	120	1	8.0	

NOTES:
1. PROVIDE COMPLETE WITH PRESSURE–TEMPERATURE GAUGE, WATER FLOW SWITCH, ASME PRESSURE RELIEF VALVE, TWO DIAPHRAGM MAIN GAS VALVES, MAIN GAS REGULATOR, MANUAL RESET LOW GAS PRESSURE SWITCH, MAIN GAS COCK, SOLENOID PILOT GAS VALVE, PILOT GAS–PRESSURE REGULATOR, PILOT GAS COCK, INTERRUPTED SPARK–IGNITED PILOT, FLAME SAFE–GUARD PROGRAMMER, MANUAL RESET HI–LIMIT TEMPERATURE CONTROL, OPERATING TEMP CONTROL, DIFFERENTIAL AIR PROVING SWITCH, DIAGNOSTIC ANNUNCIATOR, VIBRATION ISOLATORS & ELECTRONIC SPARK–PLUG IGNITION.

THROUGH WALL HEAT PUMP SCHEDULE

MARK	FAN DATA AIR FLOW HIGH/LOW L/S	OA L/S	MOTOR KW	COOLING DATA ① TOTAL KW	SENSIBLE KW	HEATING DATA ② TOTAL KW	COP	ELECTRIC HEATER KW	STAGES	ELECTRIC SERVICE ③ TOTAL FLA	MCA	MFS	VOLTS	PH	REMARKS
PTAC–1A	142/94	30	0.09	3.86	–	3.2	2.6	5	1	19.9	28.0	30	208	1	④
PTAC–2A	142/94	30	0.09	3.86	–	3.2	2.6	5	1	19.9	28.0	30	208	1	④

NOTES:
① COOLING CAPACITY BASED ON EAT = 23.9°CDB/17.2°CWB AND 35°C AMBIENT AIR TEMPERATURE.
② HEATING CAPACITY BASED ON EAT = 20°CDB AND 8.3°C AMBIENT AIR TEMPERATURE.
③ SUPPLEMENTAL ELECTRIC HEATER F.L.A. INCLUDED. ONE DISCONNECT SWITCH REQUIRED FOR EACH INDOOR UNIT.
④ PROVIDE MANUFACTURERS STANDARD SUBBASE, DRAIN KIT, LEVELING LEGS, POWER CORD AND EXTERIOR GRILLE.

CLOSED–CIRCUIT COOLER SCHEDULE

MARK	TYPE	WATER FLOW L/S	COOLING LOAD KW	EWT DEG. C.	LWT DEG C.	WPD kPa	EAT WB DEG. C	FAN TYPE	FAN AIR FLOW L/S	MOTOR KW	MOTOR RPM	SPRAY PUMP FLOW L/S	SPRAY PUMP MOTOR KW	SUMP HEATER TYPE	SUMP HEATER KW	ELECTRICAL SERVICE VOLTS	PHASE	OVER–ALL DIMENSIONS WIDTH mm	LENGTH mm	HGT W/DPR mm	REMARKS
CCC–1A	FORCED–DRAFT	19.6	454	35	29.4	5.95	25	CENTRIFUGAL	24,172	22.4	1800/1200	242.3	1.5	ELEC	5	480	3	2440	5335	3580	NOTE 1

NOTE: 1. PROVIDE LOW PROFILE CONFIGURATION COMPLETE WITH DISCHARGE HOOD WITH POSITIVE CLOSURE DAMPER(S), ELECTRIC PAN HEATER, TWO FAN MOTORS, ELECTRIC WATER LEVEL CONTROL, VIBRATION ISOLATORS, AND SCREENED BOTTOM PANEL.

REVISIONS

GLENN & SADLER
A/E CONTRACT NO. N62470–98–R–3307
JOB ORDER NO. 8R6027
DWG DESIGN: DWG2
DRAWN: GKH
REVIEW: RMK
QC: —
CHIEF ARCH./ENGR.: RDE
PROJECT MANAGER: JHH
FIRE PROTECTION: —
BRANCH MANAGER: JPL
DESIGN DIRECTOR: K
APPROVED: —
ACTIVITY SATISFACTORY TO: —
FOR RFS FOR COMMANDER NAVFAC:

Richard M. Klein
No. 027864
11-9-00
COMMONWEALTH OF VIRGINIA
PROFESSIONAL ENGINEER

DEPARTMENT OF THE NAVY
NAVAL FACILITIES ENGINEERING COMMAND
ATLANTIC DIVISION
NORFOLK, VIRGINIA
NAVAL STATION
CHAMBERS FIELD, NAVAL STATION, NORFOLK, VIRGINIA
P–522 AND P–524
AIRCRAFT MAINTENANCE HANGARS
SCHEDULES

CODE ID. NO. 80091 SIZE D
SCALE: NONE
EFD NO.
STA. PROJ. NO. P522/P524
SPEC. NO. 05–98–8027
CONSTR. CONTR. NO. N62470–98–B–8027
NAVFAC DRAWING NO. 4429139
SHEET 375 OF 481
M6.2A

11/12/99

P:\9926\
8500022
(X-TBLK)
1=1"

Bowman, Foster & Associates, P.C.
Consulting Engineers
Norfolk, VA 23502

GRILLE, REGISTER & DIFFUSER SCHEDULE

MARK	SERVICE	TYPE	NECK SIZE mm	BLOW	MAX. APD Pa	REMARKS
Ⓐ	SUPPLY AIR	REGISTER	250x150	DOUBLE DEFLECTION	13	
Ⓑ	SUPPLY AIR	REGISTER	300x200	DOUBLE DEFLECTION	13	
Ⓒ	SUPPLY AIR	REGISTER	400x200	DOUBLE DEFLECTION	13	
Ⓓ	SUPPLY AIR	SQUARE CEILING	150x150	4 – WAY	18	NOTE 2
Ⓔ	SUPPLY AIR	SQUARE CEILING	225x225	4 – WAY	18	NOTE 2
Ⓕ	SUPPLY AIR	REGISTER	200x150	DOUBLE DEFLECTION	10	
Ⓖ	SUPPLY AIR	SQUARE CEILING	150x150	1 – WAY	13	NOTE 2
Ⓗ	SUPPLY AIR	SQUARE CEILING	300x300	4 – WAY	5	NOTE 2
Ⓘ	SUPPLY AIR	SQUARE CEILING	225x150	1 – WAY	5	NOTE 2
Ⓙ	SUPPLY AIR	SQUARE CEILING	225x225	2 – WAY CORNER	13	NOTE 2
Ⓡ	RETURN/EXH AIR	REGISTER	900x400		13	NOTES 1
Ⓢ	RETURN/EXH AIR	REGISTER	250x250		11	NOTES 1 & 2
Ⓣ	RETURN/EXH AIR	REGISTER	200x200		11	NOTES 1 & 2
Ⓤ	RETURN/EXH AIR	REGISTER	200x200		13	NOTES 1 & 2
Ⓥ	RETURN/EXH AIR	REGISTER	300x300		13	NOTES 1 & 2
Ⓦ	RETURN/EXH AIR	REGISTER	550x550		13	NOTES 1 & 2
Ⓧ	RETURN/EXH AIR	REGISTER	200x200		13	NOTES 1 & 2
Ⓨ	RETURN/EXH AIR	REGISTER	400x400		13	NOTE 1
Ⓩ	RETURN/EXH AIR	REGISTER	450x450		13	NOTE 1

NOTES:
1. SET FACE BARS AT 45 DEGREE ANGLE.
2. LAY-IN CEILING INSTALLATION – PROVIDE 600/600mm PANELS.

CIRCULATING PUMP SCHEDULE

MARK	TYPE	WATER FLOW L/S	HEAD KPa	MOTOR			RPM	EFFICIENCY	NEMA MOTOR STARTER		REMARKS
				KW	VOLTS	PH			SIZE	TYPE	
CP-1A	CENTRIFUGAL BASE MOUNTED	19.6	122	5.6	480	3	1750	73.7	1	AUTO	
CP-2A	CENTRIFUGAL BASE MOUNTED	19.6	122	5.6	480	3	1750	73.7	1	AUTO	
CP-3A	CENTRIFUGAL IN-LINE	3.8	60	.56	480	3	1750	59.7	00	AUTO	
CP-4A	CENTRIFUGAL IN-LINE	3.8	60	.56	480	3	1750	73.7	00	AUTO	

AIR INTAKE/EXHAUST SCHEDULE

MARK	AIRFLOW L/S	ROOF OPENING	THROAT AREA M^2	MIN INTAKE FREE AREA M^2	APD Pa	MATERIAL	BACKDRAFT DAMPER REQUIRED	REMARKS
H-1A	1225	600x600	0.37	0.877	28	ALUMINUM	NO	
H-2A	870	500x500	0.31	0.35	38	ALUMINUM	YES	
H-3A	1700	600x600	0.37	0.42	75	ALUMINUM	YES	

AIR SEPARATOR/EXPANSION TANK SCHEDULE

AIR SEPARATOR			EXPANSION TANK						REMARKS
MARK	PIPE SIZE (mm)	PRESSURE DROP (KPa)	MARK	ACCEPTANCE VOLUME (LITERS)	TANK VOLUME (LITERS)	MAX TEMP (°C)	MIN TEMP (°C)	FILL PRESSURE KPa	
AS-1A	150	4.5	ET-1A	128.7	340.7	82.2	10.0	83	

GAS FIRED UNIT HEATER SCHEDULE

MARK	AIR FLOW L/S	INPUT KW	OUTPUT KW	VENT SIZE mm	EAT °CDB	LAT °CDB	NATURAL GAS		ELECTRICAL SERVICE			REMARKS
							INPUT ML/S	OUTPUT ML/S	MOTOR KW	VOLTS	PH	
UH-1B	870	36.6	29.3	100	12.77	40.4	787	15	0.19	120	1	1
UH-2B	870	36.6	29.3	100	12.77	40.4	787	15	0.19	120	1	1

1 PROVIDE 120 VOLT CONTROL THERMOSTAT.

CONVERSION FACTORS – METRIC TO ENGLISH

METRIC	MULTIPLY METRIC BY	ENGLISH
LITERS/SEC; L/s	15.848	GALLONS/MINUTE; GPM
LITERS/SEC; L/s	3.6	CUBIC METERS/HOUR; M^3/HR
KILOWATTS; Kw	0.2843	TONS OF REFRIGERATION
METERS; M	3.2808	FEET
MILLIMETERS; mm	0.03937	INCHES
KILOPASCAL; kPa	0.145	LBS./SQ. INCH; PSI
BAR	100	KILOPASCAL; kPa
KILOWATTS; Kw	3411.37	BTUH
LITERS; L	0.2642	GALLONS
KV; VALVE COEFF.	1.17	CV; VALVE COEFFICIENT
METERS/SEC; m/s	3.281	FEET/SECOND; F/S
LITERS/SEC; L/s	2.1191	CUBIC FEET/MINUTE; CFM
KILOWATTS; Kw	1.34	MOTOR HORSEPOWER
PASCAL; Pa	0.004	INCHES OF WATER
SQ. METERS; M^2	10.764	SQ. FEET; FT^2
KILOPASCAL; kPa	0.3356	FT. OF WATER
KILOWATTS; Kw	0.10194	BOILER HORSEPOWER
L/s-M2	19.67	CFM/100 S.F.

REVISIONS

STM.	DESCRIPTION	DATE	APPROVED

GLENN & SADLER
A/E CONTRACT NO. N62470-99-R-3307
JOB ORDER NO. 9R6027
APPROVED DATE
ACTIVITY SATISFACTORY
PROGRAM
DWG. NO. PWG2 REVISION
KLB DRAWN
RMK REVIEW
DC
RDE CHIEF ARCH/ ENGR.
PROJECT MANAGER
FIRE PROTECTION
BRANCH MANAGER
DESIGN DIRECTOR
FOR BID FOR CONTRACTOR MATRL.

STATE OF VIRGINIA
Richard M. Klein
No. 027564
10-7-00
PROFESSIONAL ENGINEER

DEPARTMENT OF THE NAVY
NAVAL FACILITIES ENGINEERING COMMAND
ATLANTIC DIVISION
NORFOLK, VIRGINIA
NAVAL STATION
CHAMBERS FIELD, NAVAL STATION, NORFOLK, VIRGINIA
P-522 AND P-524
AIRCRAFT MAINTENANCE HANGARS
SCHEDULES

CODE ID. NO. 80091 SIZE D
SCALE: NONE
EFD NO.
STA. PROJ. NO. P522/P524
SPEC. NO. 05-98-8027
CONSTR. CONTR. NO. N62470-98-B-8027
NAVFAC DRAWING NO. 4429140
SHEET 376 OF 481
M6.3A

P:\9926\
05-98-027
(X-TBLK)
1=1"

11/12/99

Bowman, Foster & Associates, P.C.
Consulting Engineers
Norfolk, VA 23502

NOTES

1. DIMENSIONS ARE IN MILLIMETERS UNLESS NOTED OTHERWISE.
2. LEGEND & ABBREVIATIONS ON SHEET M1.1.
3. EQUIPMENT SCHEDULES ON SHEETS M6.1A THROUGH M6.3A.

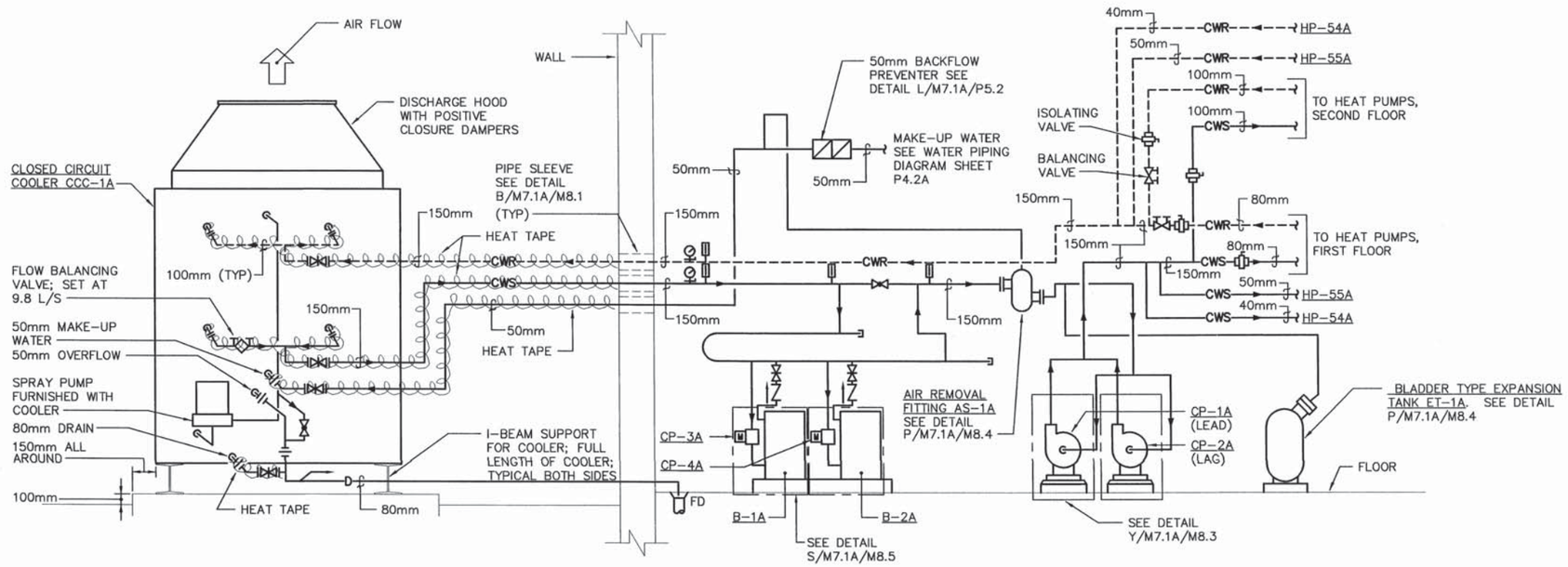

HEAT PUMP WATER PIPING DIAGRAM

NO SCALE

REVISIONS			
	DESCRIPTION	DATE	APPROVED

DWG2 (DESIGN) KLB (DRAWN) RMK (REVIEW) TLH
QC RDF CHIEF ARCH / ENGR. JHM PROJECT MANAGER FIRE PROTECTION STM BRANCH MANAGER STM DESIGN DIRECTOR

GLENN & SADLER
A/E CONTRACT NO. N62470-99-R-3307
JOB ORDER NO. 9/99027
APPROVED DATE
ACTIVITY SATISFACTORY TO
PROGRAM MANAGER
FOR BFG FOR COMMANDER NAVFAC

COMMONWEALTH OF VIRGINIA
Richard M. Klein
No. 027864
10-9-00
PROFESSIONAL ENGINEER

DEPARTMENT OF THE NAVY
NAVAL FACILITIES ENGINEERING COMMAND
ATLANTIC DIVISION
NAVAL STATION NORFOLK, VIRGINIA
CHAMBERS FIELD, NAVAL STATION, NORFOLK, VIRGINIA
P-522 AND P-524
AIRCRAFT MAINTENANCE HANGARS
HEAT PUMP WATER PIPING DIAGRAM

CODE ID. NO. 80091 SIZE D
SCALE: NONE
EFD NO.
STA. PROJ. NO. P522/P524
SPEC. NO. 05-98-8027
CONSTR. CONTR. NO. N62470-98-B-8027
NAVFAC DRAWING NO. 4429141
SHEET 377 OF 481
M7.1A

P:\9926\
P5200029
(X-TBLK)
1" = 1"

11/12/99

Bowman, Foster & Associates, P.C.
Consulting Engineers
Norfolk, VA 23502

NOTES

1. DIMENSIONS ARE IN MILLIMETERS UNLESS NOTED OTHERWISE.
2. LEGEND & ABBREVIATIONS ON SHEET M1.1.
3. EQUIPMENT SCHEDULES ON SHEETS M6.1A THROUGH M6.3A.
4. FOR HEAT PUMP HP-54A AND HP-55A SEE SHEET M4.1A.

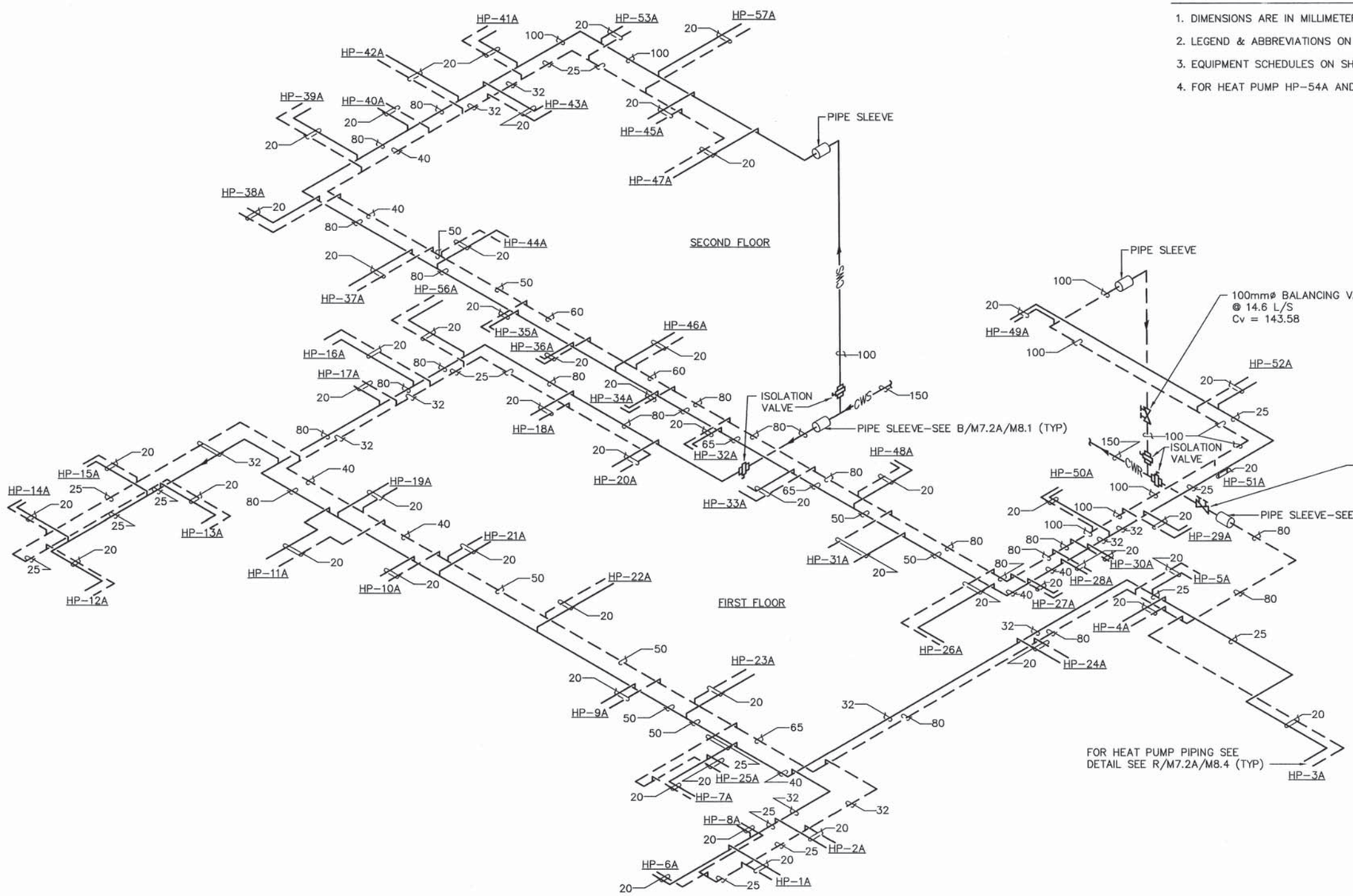

HEAT PUMP CONDENSER WATER PIPING DIAGRAM

NO SCALE

REVISIONS				
STM.	DESCRIPTION	DATE	APPROVED	

DWG. DWG2 DESIGN JRP DRAWN RMK REVIEW T.L.H. QC RDF CHIEF ARCH./ ENGR. PROJECT MANAGER FIRE PROTECTION JHW BRANCH MANAGER STM DESIGN DIRECTOR

GLENN & SADLER
A/E CONTRACT NO. N62470-99-R-3307
JOB ORDER NO. 918027
ACTIVITY APPROVED SATISFACTORY DATE
FOR BID FOR COMMANDER NAVFAC

COMMONWEALTH OF VIRGINIA
Richard M. Kelly
027864
10-9-00
PROFESSIONAL ENGINEER

DEPARTMENT OF THE NAVY
NAVAL FACILITIES ENGINEERING COMMAND
ATLANTIC DIVISION
NORFOLK, VIRGINIA
NAVAL STATION
CHAMBERS FIELD, NAVAL STATION, NORFOLK, VIRGINIA
P-522 AND P-524
AIRCRAFT MAINTENANCE HANGARS
HEAT PUMP PIPING DIAGRAM

CODE ID. NO. 80091 SIZE D
SCALE: NONE
EFD NO.
STA. PROJ. NO. P522/P524
SPEC. NO. 05-98-8027
CONSTR. CONTR. NO. N62470-98-B-8027
NAVFAC DRAWING NO. 4429142
SHEET 378 OF 481
M7.2A

11/12/99

P:\9926\
95-0207
(1=1")

Bowman, Foster & Associates, P.C.
Consulting Engineers
Norfolk, VA 23502

NOTES

1. DIMENSIONS ARE IN MILLIMETERS UNLESS NOTED OTHERWISE.
2. LEGEND & ABBREVIATIONS ON SHEET M1.1.
3. EQUIPMENT SCHEDULES ON SHEETS M6.1A THROUGH M6.3A.
4. FOR HP-54A AND HP-55A. SEE SHEET M4.1A.

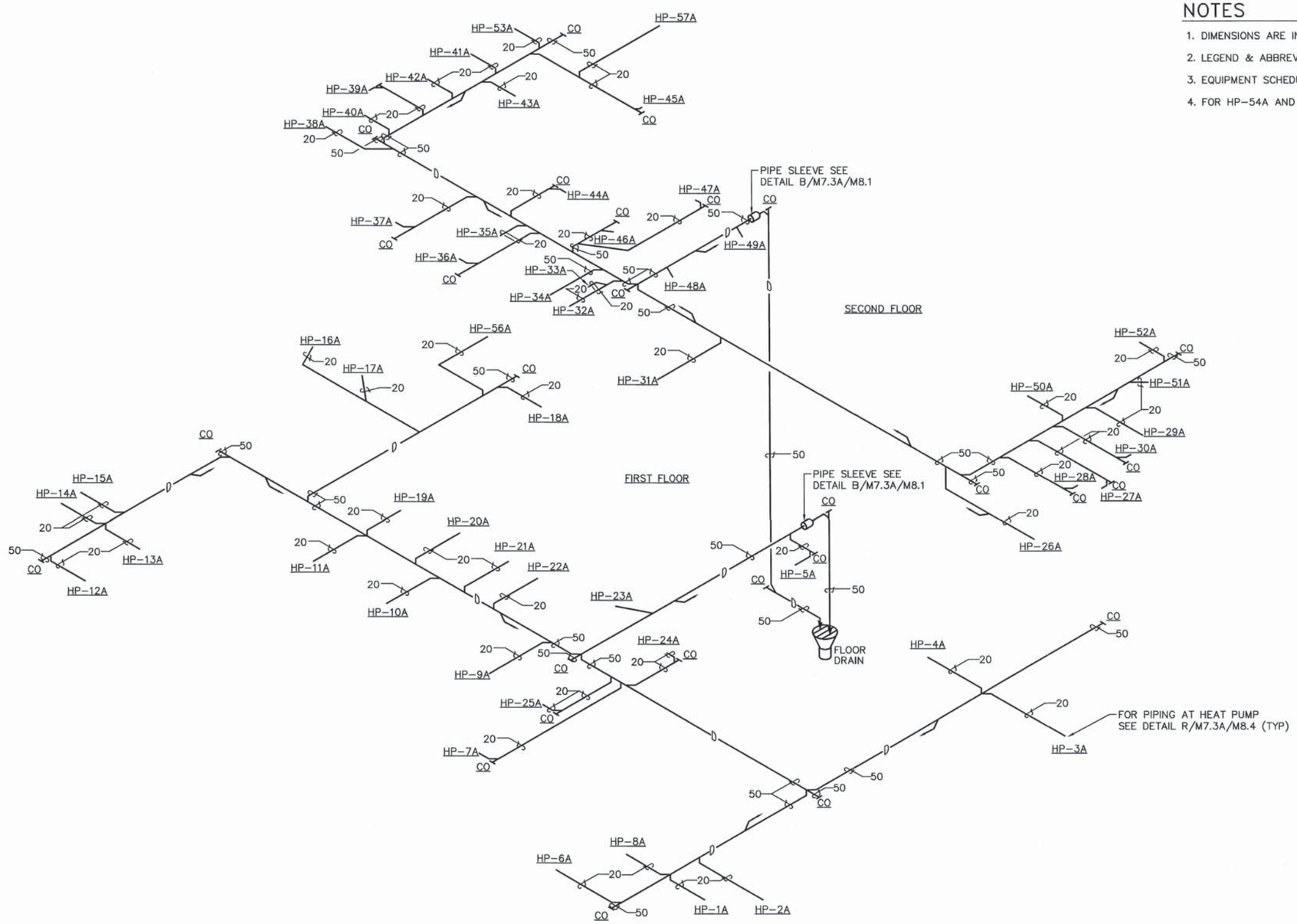

HEAT PUMP CONDENSATE PIPING DIAGRAM

NO SCALE

REVISIONS			
STM.	DESCRIPTION	DATE	APPROVED

DWG. PWG2 DESIGN JPR DRAWN RMK REVIEW TEH QC RDF CHIEF ARCH./ ENGR. JJH PROJECT MANAGER FIRE PROTECTION JJH BRANCH MANAGER DESIGN DIRECTOR

GLENN & SADLER
A/E CONTRACT NO. N62470-99-R-3307
JOB ORDER NO. 9/96027
APPROVED DATE
ACTIVITY SATISFACTORY
PROGRAM
FOR BID FOR CHANGEOVER WORK

COMMONWEALTH OF VIRGINIA Richard M. Klein No. 027864 10-9-09 REGISTERED PROFESSIONAL ENGINEER

DEPARTMENT OF THE NAVY
NAVAL FACILITIES ENGINEERING COMMAND
ATLANTIC DIVISION
NAVAL STATION NORFOLK, VIRGINIA

CHAMBERS FIELD, NAVAL STATION, NORFOLK, VIRGINIA
P-522 AND P-524
AIRCRAFT MAINTENANCE HANGARS
HEAT PUMP CONDENSATE PIPING DIAGRAM

CODE ID. NO. 80091 SIZE D
SCALE: NONE
EFD NO.
STA. PROJ. NO. P522/P524
SPEC. NO. 05-98-8027
CONSTR. CONTR. NO. N62470-98-B-8027
NAVFAC DRAWING NO. 4429143
SHEET 379 OF 481
M7.3A

P:\9926\ 8-5-2009 (X-TBLK) 1=1"

11/12/99

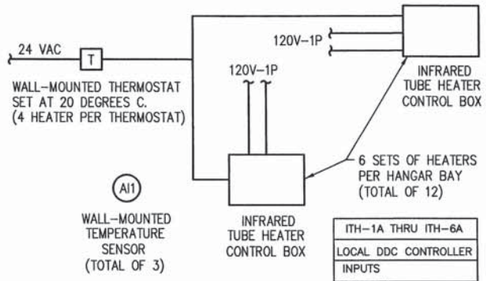

ITH-1A THRU ITH-6A		
LOCAL DDC CONTROLLER		
INPUTS		
ANALOG	AI1	HANGAR TEMP

GAS-FIRED INFRARED TUBE HEATER CONTROLS

NO SCALE

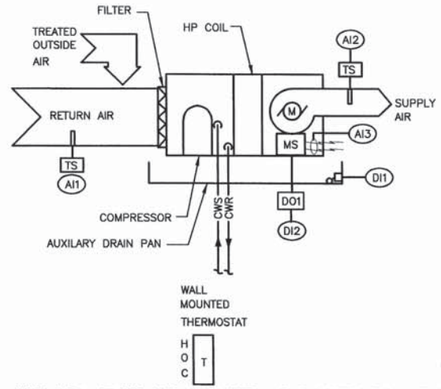

HP-1A THRU HP-53A & HP-56A & HP-57A			NOTES
LOCAL DDC CONTROLLER			
INPUTS			
ANALOG	AI1	RA TEMP	
	AI2	SA TEMP	
	AI3	INPUT CURRENT	
DIGITAL	DI1	DRAIN PAN STATUS	1
	DI2	REVERSING VALVE STATUS	
OUTPUTS			
DIGITAL	DO1	ENABLE UNIT	

NOTES

1. USE IF UNIT IS ABOVE CEILING

HEAT PUMP UNIT CONTROL DIAGRAM (T'STAT)

NO SCALE

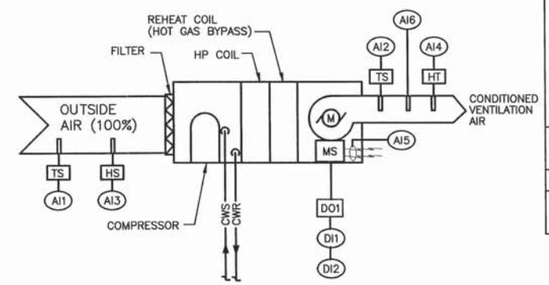

HP-54A & HP-56A		
LOCAL DDC CONTROLLER		
INPUTS		
ANALOG	AI1	OA TEMP
	AI2	SA TEMP
	AI3	OA RELATIVE HUMIDITY
	AI4	SA RELATIVE HUMIDITY
	AI5	INPUT CURRENT
	AI6	SMOKE DETECTOR
DIGITAL	DI1	REVERSING VALVE STATUS
	DI2	HOT GAS BY-PASS STATUS
OUTPUTS		
DIGITAL	DO1	ENABLE UNIT

VENTILATION AIR HEAT PUMP UNIT CONTROL DIAGRAM

NO SCALE

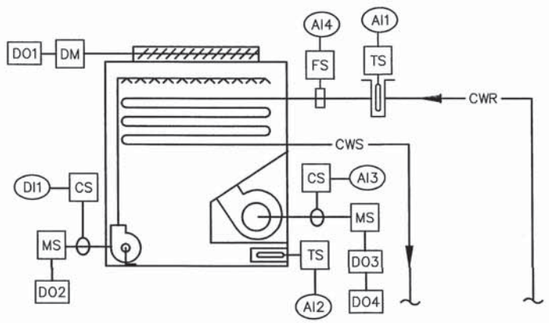

CCC-1A		
LOCAL DDC CONTROLLER		
INPUTS		
ANALOG	AI1	CWR TEMP
	AI2	TANK TEMP
	AI3	INPUT CURRENT
	AI4	FLOW CONTROL SWITCH
DIGITAL	DI1	SPRAY PUMP STATUS
OUTPUTS		
DIGITAL	DO1	DAMPER POSITION
	DO2	SPRAY PUMP S/S
	DO3	LOW SPEED FAN S/S
	DO4	HIGH SPEED FAN S/S

CLOSED CIRCUIT COOLER CONTROL DIAGRAM

NO SCALE

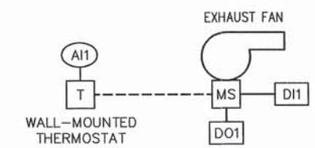

EF-1A		
LOCAL DDC CONTROLLER		
INPUTS		
ANALOG	AI1	HANGAR TEMP
DIGITAL	DI1	FAN STATUS
OUTPUTS		
DIGITAL	DO1	FAN ENABLE

EXHAUST FAN EF-1A CONTROL DIAGRAM

NO SCALE

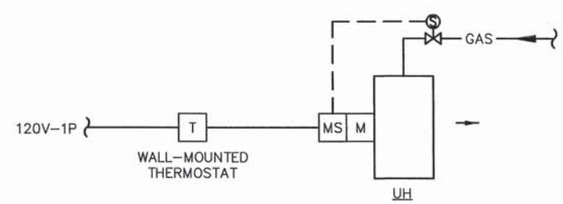

UNIT HEATER CONTROL DIAGRAM

NO SCALE

NOTE: INTERLOCKED WITH OPERATION OF RESPECTIVE VENTILATION AIR HEAT PUMP UNIT

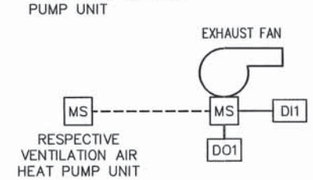

EF-2A, EF-3A & EF-5A		
LOCAL DDC CONTROLLER		
INPUTS		
DIGITAL	DI1	FAN STATUS
OUTPUTS		
DIGITAL	DO1	FAN ENABLE

EXHAUST FANS EF-2A, EF-3A & EF-5A CONTROL DIAGRAM

NO SCALE

Bowman, Foster & Associates, P.C.
Consulting Engineers
Norfolk, VA 23502

REVISIONS

GLENN & SADLER

DEPARTMENT OF THE NAVY — NAVAL FACILITIES ENGINEERING COMMAND — ATLANTIC DIVISION — NORFOLK, VIRGINIA

NAVAL STATION CHAMBERS FIELD, NAVAL STATION, NORFOLK, VIRGINIA
P-522 AND P-524
AIRCRAFT MAINTENANCE HANGARS
CONTROLS

CODE ID. NO. 80091 SIZE D
SCALE: NONE
EFD NO.
STA. PROJ. NO. P522/P524
SPEC. NO. 05-98-8027
CONSTR. CONTR. NO. N62470-98-B-8027
NAVFAC DRAWING NO. 4429144
SHEET 380 OF 481

M9.1A

11/12/99

Bowman, Foster & Associates, P.C.
Consulting Engineers
Norfolk, VA 23502

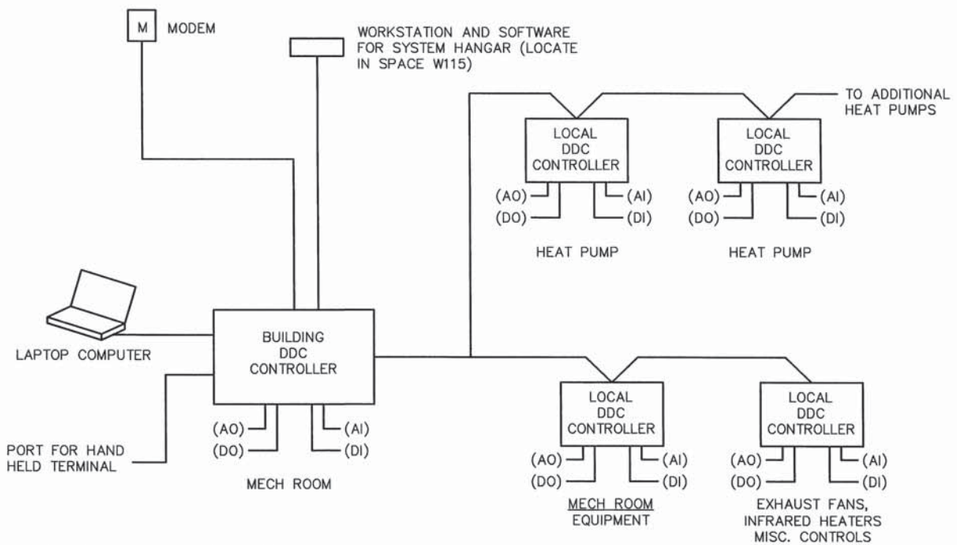

DDC SYSTEM DIAGRAM

NO SCALE

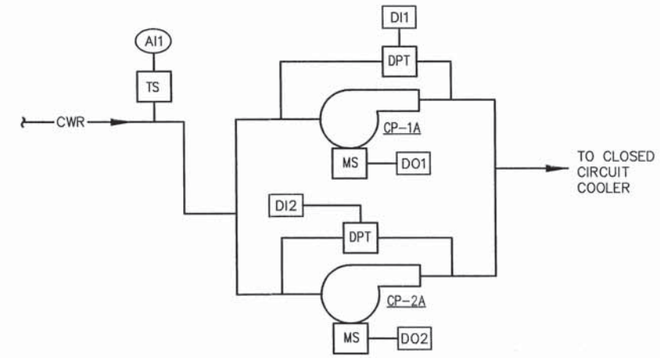

CP-1A & CP-2A		
LOCAL DDC CONTROLLER		
INPUTS		
ANALOG	AI1	CWR TEMP
DIGITAL	DI1	CP-1A STATUS
	DI2	CP-2A STATUS
OUTPUTS		
ANALOG		
DIGITAL	DO1	CP-1A START/STOP
	DO2	CP-2A START/STOP

CONDENSER WATER CIRCULATING PUMP CONTROL DIAGRAM

NO SCALE

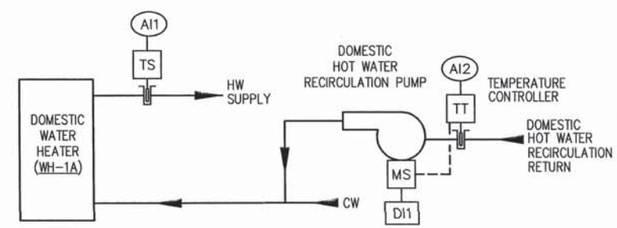

HOT WATER RECIRCULATION PUMP		
LOCAL DDC CONTROLLER		
INPUTS		
ANALOG	AI1	HOT WATER SUPPLY TEMP
	AI2	DOMESTIC HOT WATER RECIRCULATION RETURN TEMP
DIGITAL	DI1	PUMP STATUS

DOMESTIC HOT WATER RECIRCULATION PUMP

NO SCALE

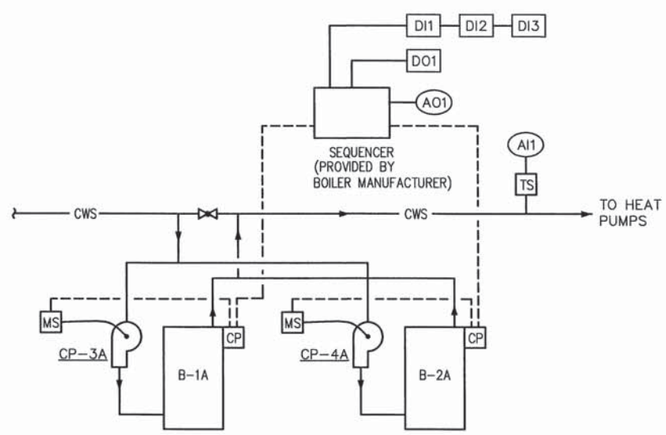

B-1A & B-2A		
LOCAL DDC CONTROLLER		
INPUTS		
ANALOG	AI1	CWS TEMP
DIGITAL	DI1	PUMP STATUS
	DI2	ALARMS
	DI3	HEATING SYSTEM STATUS
OUTPUTS		
ANALOG	AO1	HEATING WATER SET POINT
DIGITAL	DO1	BOILER ENABLE

HOT WATER HEATING CONTROL DIAGRAM

NO SCALE

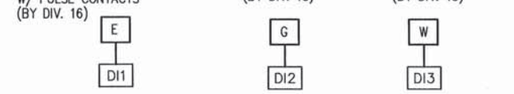

PHASE FAILURE/REVERSAL CONTACT IN MAIN SWITCHGEAR (BY DIV. 16)

PHASE MONITOR — DI4

NOTES:
1. IN KWH
2. 1,000 CUBIC FEET PER HOUR
3. 1,000 GALLONS

UTILITIES			NOTES
LOCAL DDC CONTROLLER			
INPUTS			
DIGITAL	DI1	TOTAL ELEC CONSUMED	1
	DI2	TOTAL GAS CONSUMED	2
	DI3	TOTAL WATER USED	3
	DI4	PHASE STATUS	

UTILITIES MONITORING

NO SCALE

REVISIONS

DESCRIPTION	DATE	APPROVED

GLENN & SADLER
A/E CONTRACT NO. N62470-99-R-3307
JOB NUMBER NO. 9F8027
DWG2 DESIGN KLB DRAWN RMK REVIEW FLH QC RDF CHIEF ARCH / ENGR. JHH PROJECT MANAGER FIRE PROTECTION BRANCH MANAGER DESIGN DIRECTOR
APPROVED
ACTIVITY SATISFACTORY TO
PROGRAM MGR.
OIC EFD FOR CONTRACTOR WORK

STATE OF VIRGINIA
Richard M. Klein
No. 027564
10-9-09
REGISTERED PROFESSIONAL ENGINEER

DEPARTMENT OF THE NAVY
NAVAL FACILITIES ENGINEERING COMMAND
ATLANTIC DIVISION
NORFOLK, VIRGINIA
NAVAL STATION
CHAMBERS FIELD, NAVAL STATION, NORFOLK, VIRGINIA
P-522 AND P-524
AIRCRAFT MAINTENANCE HANGARS
CONTROLS

CODE ID. NO. 80091 SIZE D
SCALE: AS NOTED
EFD NO.
STA. PROJ. NO. P522/P524
SPEC. NO. 05-98-8027
CONSTR. CONTR. NO. N62470-98-B-8027
NAVFAC DRAWING NO. 4429145
SHEET 381 OF 481
M9.2A

P:\9926\ 9F0027 (X-TBLK) 1"=1"

11/12/99

SEQUENCE OF OPERATIONS

HEAT PUMP UNIT CONTROLS:

FOR EACH HEAT PUMP UNIT, PROVIDE A WALL-MOUNTED TEMPERATURE SENSOR WHICH ACTING THROUGH THE DDC CONTROLS SHALL PROVIDE COOLING AND HEATING. THE DDC CONTROLS SHALL ENABLE THE LOCAL HEAT PUMP CONTROLS.

COOLING: ON A RISE IN ROOM TEMPERATURE ABOVE THE TRANSMITTER SET-POINT OF 23.9 DEGREES C., THE UNIT'S REVERSING VALVE SHALL BE POSITIONED FOR COOLING. THE SET POINT SHALL BE ADJUSTABLE FROM LOCAL DDC CONTROLLER.

HEATING: ON A DROP IN ROOM TEMPERATURE BELOW THE HEATING SET POINT OF 20 DEGREES C., THE UNIT'S REVERSING VALVE SHALL BE POSITIONED FOR HEATING. THE SET POINT SHALL BE ADJUSTABLE FROM LOCAL DDC CONTROLLER.

THE UNIT FAN SHALL RUN CONTINUOUSLY WHEN ENABLED BY THE DDC CONTROLS.

VENTILATION AIR HEAT PUMP UNIT CONTROLS:

FOR EACH HEAT PUMP UNIT, PROVIDE DUCT-MOUNTED TEMPERATURE AND HUMIDITY TRANSMITTERS WHICH SHALL CONTROL THE HEAT PUMP UNIT FOR COOLING , HEATING AND DEHUMIDIFICATION. THE DDC CONTROLS SHALL ENABLE THE LOCAL HEAT PUMP CONTROLS.

COOLING:

ON A RISE IN SUPPLY AIR TEMPERATURE ABOVE THE TRANSMITTER SET-POINT, 23.9 DEGREES C., THE UNIT'S REVERSING VALVE SHALL BE POSITIONED FOR COOLING. THE SET POINT SHALL BE ADJUSTABLE FROM LOCAL DDC CONTROLLER.

HEATING:

ON A DROP IN SUPPLY AIR TEMPERATURE BELOW THE HEATING SET POINT OF 20 DEGREES C., THE UNIT'S REVERSING VALVE SHALL BE POSITIONED FOR HEATING. THE SET POINT SHALL BE ADJUSTABLE FROM LOCAL DDC CONTROLLER.

DEHUMIDIFICATION:

ON A RISE IN SUPPLY AIR RELATIVE HUMIDITY ABOVE THE HUMIDITY TRANSMITTER SET-POINT OF 50 PERCENT RELATIVE HUMIDITY, THE HEAT PUMP UNIT'S REVERSING VALVE SHALL BE POSITIONED FOR COOLING, AND THE UNIT'S HOT GAS BYPASS REFRIGERANT VALVE SHALL BE POSITIONED TO ALLOW HOT GAS REFRIGERANT TO FLOW TO THE REHEAT COIL. THE SET-POINT SHALL BE ADJUSTABLE FROM THE DDC CONTROLLER.

THE UNIT FAN SHALL RUN CONTINUOUSLY WHEN ENABLED BY THE DDC CONTROLS.

CLOSED-CIRCUIT COOLER(S) CONTROLS (CCC-1A)

EACH COOLER SHALL BE ENABLED BY THE DDC CONTROLLER. PROVIDE CWR TEMPERATURE TRANSMITTER TO ACCOMPLISHED THE FOLLOWING:

ON A RISE IN CWR TEMPERATURE TO 29.4 DEGREES C., THE COOLER'S CLOSURE DAMPERS SHALL OPEN.

ON A RISE IN CWR TEMPERATURE TO 31.1 DEGREES C., THE COOLER'S SPRAY PUMP SHALL BE ENABLED.

ON A RISE IN CWR TEMPERATURE TO 32.2 DEGREES C., THE COOLER'S FAN MOTOR SHALL BE ENABLED AT LOW SPEED.

ON A CONTINUED RISE IN CWR TEMPERATURE, THE COOLER'S FAN MOTOR SHALL SWITCH TO HIGH SPEED.

AN ALARM SHALL BE INDICATED SHOULD ANY FAN MOTOR, OR PUMP MOTOR CAN NOT BE STARTED OR IF, THE CLOSURE DAMPERS DO NOT OPEN FULLY.

CIRCULATING PUMPS CP-1A & CP-2A SHALL RUN CONTINUOUSLY WHEN ENERGIZED BY DDC. ONLY ONE PUMP SHALL RUN AT ANY TIME. PUMP OPERATION SHALL BE ROTATED ON A 48 HOUR SCHEDULE.

SHOULD A LOSS OF FLOW OCCURE WHICH CANNOT BE CORRECTED BY STARTING THE BACK-UP PUMP THE DDC CONTROLLER SHALL TAKE THE HEAT PUMPS, CLOSED CIRCUIT COOLER AND BOILERS OFF LINE AND INDICATE AN ALARM CONDITION.

BOILER AND HEATING WATER PUMPS CONTROLS

PROVIDE A BOILER SEQUENCING CONTROL PANEL TO ANNUNICATED ALARMS TO THE DDC WORKSTATIONS, TO OPERATE BOILERS B-1A & B-2A IN SEQUENCE, START/STOP BOILER PUMPS CP-3A & CP-4A AND MAINTAIN THE HEATING SUPPLY WATER LOOP TEMPERATURE.

A SIGNAL FROM THE DDC SHALL ENERGIZE THE HEATING CONTROLS. BOILER SHALL BE STARTED/ STOPPED BASED ON ROTATING THE LEAD BOILER EVERY 24 HOURS.

THE HEATING SUPPLY WATER TEMPERATURE SHALL BE MAINTAINED AT SET-POINT OF THE SEQUENCING PANEL FROM A SIGNAL PROVIDE BY SUPPLY WATER SENSOR/ TRANSMITTER DEVICE. SET-POINT SHALL BE RESET BASED ON OUTSIDE AIR AS FOLLOWS;

OUTSIDE AIR TEMP.	SUPPLY WATER TEMP.
15.6° C.	48.8° C.
5.0° C.	60.0° C.
-5.6° C.	71.1° C.

UNIT HEATER CONTROLS

A WALL MOUNTED THERMOSTAT WITH AN "OFF/ON" FAN SWITCH SHALL CYCLE THE FAN TO MAINTAIN ITS SET POINT(20 DEGREES C.) WHEN THE SWITCH IS IN THE "ON" POSITION-FAN MOTOR SHALL START & THE GAS SUPPLY VALVE SHALL OPEN TO PROVIDE HEAT. WHEN THE SWITCH IS IN THE "OFF" POSITION, THE FAN SHALL STOP, AND GAS SUPPLY VALVE SHALL CLOSE.

GAS-FIRED INFRARED TUBE HEATER CONTROLS

A SPACE TEMPERATURE THERMOSTAT, LOCATED AS SHOWN, SHALL ENABLE THE INFRARED TUBE HEATER CONTROLS TO PROVIDE RADIANT HEAT. ONE THERMOSTAT SHALL CONTROL FOUR (4) INFRARED TUBE HEATERS AS INDICATED.

PROVIDE SPACE TEMPERATURE SENSORS/ TRANSMITTERS IN HANGAR BAYS (TWO PER HANGAR BAY) TO SIGNAL SPACE TEMPERATURE BACK TO DDC WORKSTATIONS.

LOCAL INFRARED HEATER CONTROL SHALL BE INTERLOCKED WITH BRIDGE CRANE THROUGH LIMIT SWITCHES SUCH THAT LOCAL INFRARED HEATER POWER SHALL BE DISABLE WHEN BRIDGE CRANE PASSES UNDER A HEATER UNIT.

INDOOR AIR QUALITY

IN ROOMS W107, E107, W201 AND E201 PROVIDE INDOOR AIR QUALITY SENSORS. DDC SYSTEM SHALL TREND CARBON DIOXIDE LEVELS AND ON DETECTION OF A HIGH CARBON DIOXIDE CONCENTRATION OF 1000 PARTS PER MILLION, THE DDC CONTROL SYSTEM SHALL ISSUE THE MESSAGE "AIR QUALITY WARNING-HIGH CARBON DIOXIDE CONCENTRATIONS" TO SOFTWARE ALARM POINTS.

EXHAUST FANS CONTROLS VENTILATION AIR HEAT PUMPS

EXHAUST FANS EF-2A & EF-3A SHALL BE INTERLOCKED WITH ITS RESPECTIVE AREA. WHEN THE AHU SUPPLY AIR FAN STARTS ITS RESPECTIVE AREA EXHAUST FANS SHALL START, AND SHALL STOP WHEN SUPPLY AIR FAN STOPS.

EXHAUST FANS EF-1A SHALL BE CONTROLLED BY WALL THERMOSTAT WITH OVERRIDE CONTROL BY DDC WORKSTATIONS. THERMOSTAT SHALL ENERGIZE FAN UPON RISE IN SPACE TEMPERATURE ABOVE SET-POINT OF 32.2 DEGREES C., AND DE-ENERGIZE THE FAN UPON TEMPERATURE FALL BELOW SET-POINT.

CONTROLS LEGEND

AI	ANALOG INPUT TO DDC/EMCS
AO	ANALOG OUTPUT FROM DDC/EMCS
ATC	AUTOMATIC TEMPERATURE CONTROL
DI	DIGITAL INPUT TO DDC/EMCS
DO	DIGITAL OUTPUT FROM DDC/EMCS
DDC	DIRECT DIGITAL CONTROL
DTC	DATA TERMINAL CABINET
TUC	TERMINAL UNIT CONTROLLER
---	INTERLOCK WIRING
PT	PRESSURE TRANSMITTER
LS	END LIMIT SWITCH
SS	SIGNAL SELECTOR
CP	CONTROL PANEL
EMCS	ENERGY MANGEMENT CONTROL SYSTEM
T	AVERAGING TEMPERATURE SENSOR
DPT	DIFFERENTIAL PRESSURE TRANSMITTER
HS	HUMIDITY SENSOR
DM	DAMPER ACTUATOR 2-10 VAC SIGNAL OR 2 POSITION AS REQUIRED
MS	MOTOR STARTER
R	RELAY
SD	DUCT MOUNTED SMOKE DETECTOR
SP	STATIC PRESSURE SENSOR
TS	TEMPERATURE SENSOR
V	VALVE ACTUATOR 2-10 VAC SIGNAL OR 2 POSITION AS REQUIRED
XMFR	TRANSFORMER
G	GAS METER
W	WATER METER
E	ELETRIC METER
CS	CURRENT SENSOR

Bowman, Foster & Associates, P.C.
Consulting Engineers
Norfolk, VA 23502

REVISIONS

SYM.	DESCRIPTION	DATE	APPROVED

DWG2 DESIGN KLB DRAWN RMK REVIEW TEH
RDF CHIEF ARCH/ ENGR. — CC
PROJECT MANAGER
FIRE PROTECTION
BRANCH MANAGER
DESIGN DIRECTOR

GLENN & SADLER
A/E CONTRACT NO. N62470-99-R-3307
JOB ORDER NO. 9F8007
APPROVED: DATE
ACTIVITY SATISFACTORY
PROGRAM MANAGER

COMMONWEALTH OF VIRGINIA
Richard H. Klein
No. 027864
PROFESSIONAL ENGINEER

DEPARTMENT OF THE NAVY
NAVAL STATION
NAVAL FACILITIES ENGINEERING COMMAND
ATLANTIC DIVISION
NORFOLK, VIRGINIA
CHAMBERS FIELD, NAVAL STATION, NORFOLK, VIRGINIA
P-522 AND P-524
AIRCRAFT MAINTENANCE HANGARS
SEQUENCE OF OPERATIONS

CODE ID. NO. 80091 SIZE D
SCALE: NONE
EFD NO.
STA. PROJ. NO. P522/P524
SPEC. NO. 05-98-8027
CONSTR. CONTR. NO. N62470-98-B-8027
NAVFAC DRAWING NO. 4429346
SHEET 382 OF 481
M9.3A

11/12/99

BN\9926
6500022
(X-TBLK)
1=1"